THE AIR PERMEABILITY
OF A
COMMERCIAL CONCRETE PIPE

by

ALBERT FONG

Submitted in Partial Fulfillment

of the Requirements for the

Degree of Bachelor of Science

at the

MASSACHUSETTS INSTITUTE OF TECHNOLOGY

February, 1973

Signature of Author . . . . . .
Department of Mechanical Engineering
January 29, 1973

Certified by . . . . . .
Thesis Supervisor

Accepted by . . . . . .
Chairman, Departmental Committee on Theses

ABSTRACT

The feasibility of substituting concrete for steel in the construction of small size heat exchangers in less developed countries is advanced. An investigation into the air permeability of bare concrete pipe and concrete pipe coated with a coal tar epoxy and primer system is made. A theoretical model of flow through a porous solid is presented. Experimental results, theoretical prediction, and results of past investigators are compared and found to be widely scattered (a factor of 60). The mechanisms of flow, the types of flow, and the effects of manufacture on air permeability of concrete are discussed.

A permeability coefficient K is defined as the volume of air at 1 atmosphere flowing in 1 second through a 1 foot thick slab of concrete 1 square foot in area, under a head of 1 mm. Hg. For bare concrete it is found to be:

$$K = 1.8 \times 10^{-7} \ (ft^3\text{-}ft/ft^2\text{-}mm\text{-}sec).$$

For a coated concrete there appear to be two regions of flow. At low pressures (0 mm. to 224 mm. Hg):

$$K_1 = 2.6 \times 10^{-8} \ (ft^3\text{-}ft/ft^2\text{-}mm\text{-}sec).$$

At high pressures (224 mm. to 687+ mm. Hg):

$$K_2 = 1.2 \times 10^{-8} \ (ft^3\text{-}ft/ft^2\text{-}mm\text{-}sec).$$

TABLE OF CONTENTS

Page

Abstract 2

Table of Contents 3

List of Figures 4

Acknowledgments 5

Introduction 6

Description of Equipment and Experiments 8

Equipment
- A. The pipe
- B. The coating
- C. The apparatus
- D. Seal of the pipe

Procedure 15

Data 15
- Experiment One
- Experiment Two

Discussion of Results 19
- A. Introduction
- B. Experiment One and comparison with other data
- C. Experiment Two

Permeability of Concrete 24

Pore/Capillary System of Concrete 24
- A. Introduction
- B. Capillaries
- C. Gel pores
- D. Aggregate pores
- E. Air voids

Factors Affecting Permeability 26

A Model of Flow in Concrete 28
- A. Types of flow
- B. Poiseuille flow
- C. Knudsen flow
- D. Adzumi's model for a porous plate

Conclusions 32

Appendix 34

Bibliography 40

LIST OF FIGURES

Figure I	Concrete pipe	9
Figure II	Diagram of apparatus	13
Figure III	Method of sealing ends	14

GRAPHS

Graph I	Pressure difference vs. time, uncoated pipe	16
Graph II	Pressure difference vs. time, coated pipe	17

TABLE

Table I	Comparisons with other results	21

ACKNOWLEDGMENTS

For the resources, advice, and time offered to me I would like to extend thanks to the librarians of MIT and Stone and Webster, Mr. Ignatow of the Portland Paint Company, Mr. Kahn the local distributor, The New England Concrete Corporation, and Mr. O'Neill of the MIT Civil Engineering Department, and my appreciation to Professor Peter Griffith, without whose tolerance I never would have begun and Lotus, without whose patience I never would have finished.

INTRODUCTION

This study is part of a larger project to determine the feasibility of substituting concrete for steel in the construction of heat exchangers with consideration on applications in less developed countries.

In the early stages of development of a less developed country, a large concrete manufacturing capacity is usually reached before a comparable size steel and iron one. Presently steel is used in the fabrication of both large and small size, low and high pressure heat exchanger vessels. In applications where concrete could be substituted, savings in tooling and materials upwards of 50% could be realized. Vessels that are presently imported owing to inadequate technical resources or raw materials could be domestically produced, conserving hard-earned foreign exchange. More generally, research and application in materials substitution done by developed countries aimed toward savings and greater use of indigenous resources (men and materials) in less developed countries is one way in which the grossly uneven distribution of technology and capital in the world might be smoothed a bit.

In the past very little investigation of air permeability of concrete has been made and the question is usually avoided by encasement in steel throughout or by using several feet of concrete with high humidity. The present study concerns the air permeability of a sealed thin-walled concrete pipe (7/8")

aimed toward its use as a containment of small size shell-tube heat exchangers and semi-mass production in less developed countries.

In this unit a slight vacuum, two to five inches of Hg, would be required to draw steam into the chamber. It was investigated whether a thin-walled vessel, i.e. pipe of standard, commercial (hence, economical) construction can (a) withstand, and (b) maintain, a slight vacuum without reinforcement and inordinate pumping capability. The need for some type of coating was expected. With less developed countries in mind, coal tar epoxy was chosen for its relative low cost and ease of chemical synthesis.

Two experiments are described: (1) the determination of the air permeability of a standard concrete pipe sealed at both ends, and (2) the permeability of the same pipe covered with coal tar epoxy. Then the composition and manufacuring process of the sample pipe is presented along with the properties of the coating. A discussion of permeability and flow and the pore/capillary structure of concrete is followed by the presentation of a semi-empirical theory proposed by Adzumi derived for porous ceramic plates. It is applied and found satisfactory to within 40%. Previous work done in this area is compared and found to be widely scattered (factor of 60 spread), pointing to a definite need for systematic investigation of this property of concrete as well as a standardization of methods. A list of manufacturing suggestions is given.

DESCRIPTION OF EQUIPMENT AND EXPERIMENTS

The air permeability of bare concrete and concrete coated with a coal tar epoxy and primer was determined in two experiments.

Equipment

A. The pipe. The evacuated concrete chamber was made by sealing both ends of a commercially manufactured, mass-produced, non-reinforced or prestressed, ASTM Type I, cement sewer pipe of standard size. See Figure (I). It was cylindrical with conventional bell and spigot joints. The manufacturer and distributor, The New England Concrete Pipe Corporation, claimed that all ASTM requirements for this class of pipe were satisfied. The outer surface was rough, similar to ordinary sidewalk concrete, due to outdoor exposure and no trowelling. The inner surface was fairly smooth, similar to a rough cloth.

Most details of manufacture were proprietary but the manufacturer was kind enough to furnish the following mix information:

For a batch mix use:

2200 lb.	Sand (fineness unspecified)
600 lb.	1/2" Aggregate (type unspecified)
800 lb.	3/8" Aggregate (peastone, type unspecified)
850 lb.	Cement (ASTM Type I, "Alpha")
-	Water (amount unspecified)
0"	Slump
-	Air entrainment (type and amount unspecified)

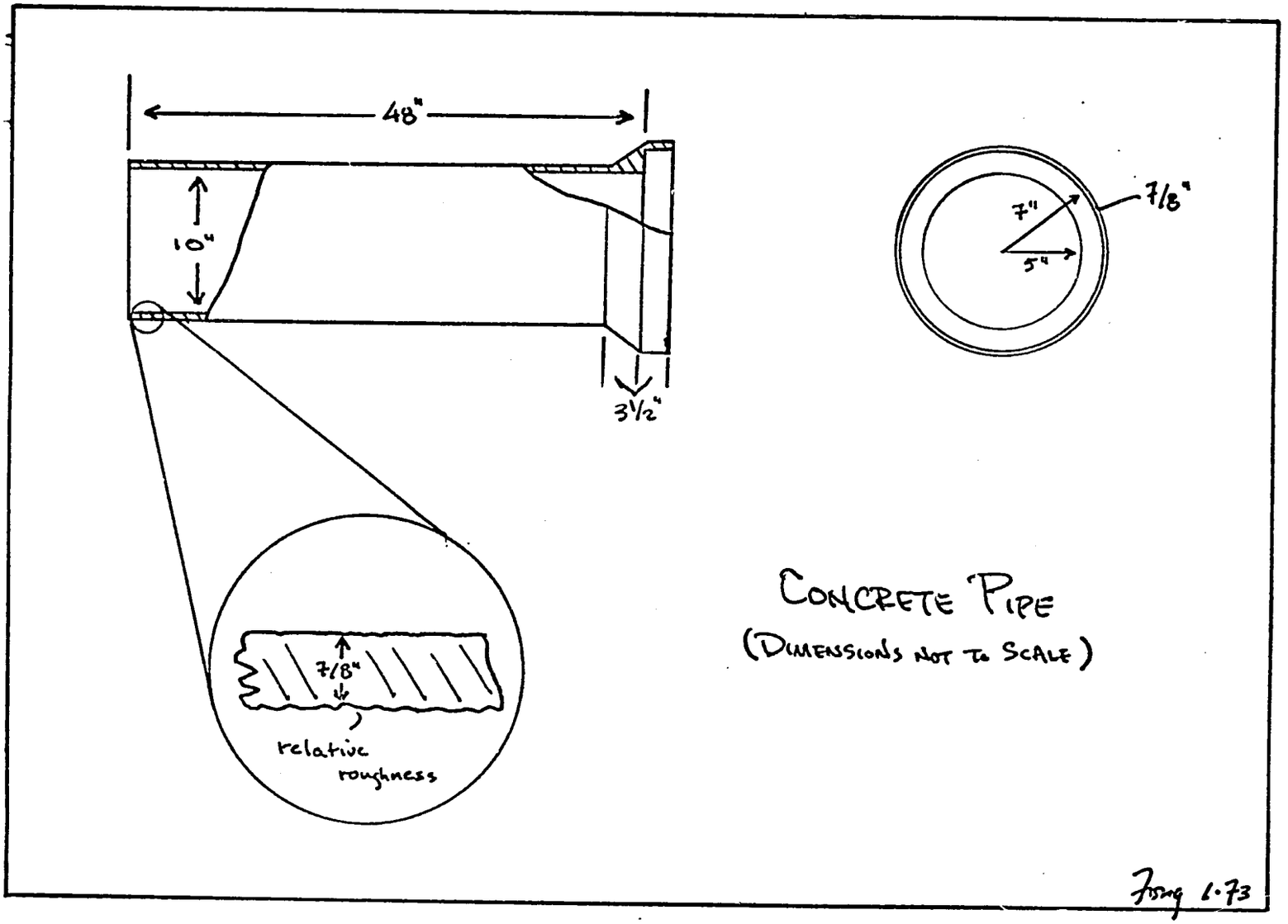
48"
10"
3½"
7/8"
relative roughness
7"
5"
7/8"
CONCRETE PIPE
(DIMENSIONS NOT TO SCALE)
Fig 1.73

FIGURE I

Typical guidelines would give a W/C ratio by weight of .3 to .5 with about one half of the normal amount of entrainment agent added.

Curing is done typically by batch. A batch is steam-cured for eight hours at an unspecified temperature and then air-cured outdoors in racks from eight months to one year.

The pipe is manufactured by the so-called "tamped process" in which a split jacket and base plate on a turntable rotate about a stationary core. Concrete is fed into the top of the annular space and is tamped at high speed. As the pipe is built up, it is compacted and tamped while the jacket rotates about the stationary core, providing a trowelling action that smoothes the interior of the pipe. When it is built up completely, it is removed to the steam-curing area where the jacket is immediately stripped and the pipe is trimmed of ragged [illegible]
itself.

The cost of $1.28 per linear foot for 10" x 7/8" wall thickness pipe was compared and found typical.

B. <u>The coating</u>. A suitable coating for concrete was required. Keeping less developed countries in mind, a concrete primer and coal tar epoxy system* was chosen for the following reasons:

*Porter Tarset Concrete Primer(R) and Porter Tarset Standard, C-200 Coal Tar Epoxy(R) were used. Both are proprietary products of the Porter Paint Company, Louisville, Ky.

1. Manufacturer's claims of relative ease of manufacture compared to silicones and other epoxies.
2. Low cost and accessibility of raw materials and low purity requirements. Cost is from one-half to two-thirds of other epoxies.
3. Ease of application and curing.
4. Application under wide ranges of humidity and temperature permitted.
5. Recoating and patching capability.
6. Previous experience on concrete pipe coating techniques. The manufacturer has a standard pipe-coating contract.
7. Proven reliability at 100 °F to 150 °F conditions in similar applications.*

The main disadvantages are a short (but, average for epoxies) pot life, from two to three hours at 60°F to 80°F with unpleasant, noxious and explosive vapors if not controlled though use in large areas is considered completely safe. Tarset Concrete Primer(R) is a two-component, catalyzed, amine-cured, coal tar epoxy resin designed for use as a sealing and penetrating primer for concrete surfaces prior to coating with coal tar epoxies. Porter Tarset C-200(R) is a two-component, catalyzed, polyamide-cured, coal tar epoxy coating. Both exhibit excellent resistance to many environments. The manu-

*In an OSW study (see Bib), a coated pipe was exposed to a water environment at different temperatures and proved durable. (OSW report PR390)

Temp. °F	100	203	225	250
Coal Tar Epoxy, Type A	300	210	60	30
Coal Tar Epoxy, Type B	300+	210+	210+	90

COATING LIFE (days)

facturer and local distributor suggested a single coating of primer (.04" dry thickness) and a double coating (.016" dry thickness) of epoxy for our application. Though they had never seen it used as a gas barrier and doubted total impenetrability, both were encouraging.

C. Apparatus A Cenco Megavac(R) vacuum pump was used to evacuate the sealed pipe through a valve at A (Figure II) and a tee at B. Pressures were measured with a vacuum gauge mounted in the tee. Standard 3/8" Polyflow(R) tubing and fittings were used. A stopwatch marked in hundredths of a minute was used for timing.

D. Seal of the pipe. The pipe was mounted parallel to the ground and sealed by clamping one-half inch thick aluminum plates on both ends (Figure III). A great deal of difficulty in sealing the ends airtight was encountered. Originally regular window caulking compound was thought to be sufficient but it was found to be too soft, and a change to butyl plastic all-weather caulking was made. It is much more self-cohesive and hardens a bit on standing. A bead was laid around the circumference of the pipe on each end and the end plates were clamped on tightly. This arrangement survived the low pressures (maximum approximately 7.6" Hg) in the uncoated pipe with a few leaks which could be immediately patched. Leaks were easily detectable by an audible hissing they emitted. However, the same arrangement did not hold against the higher

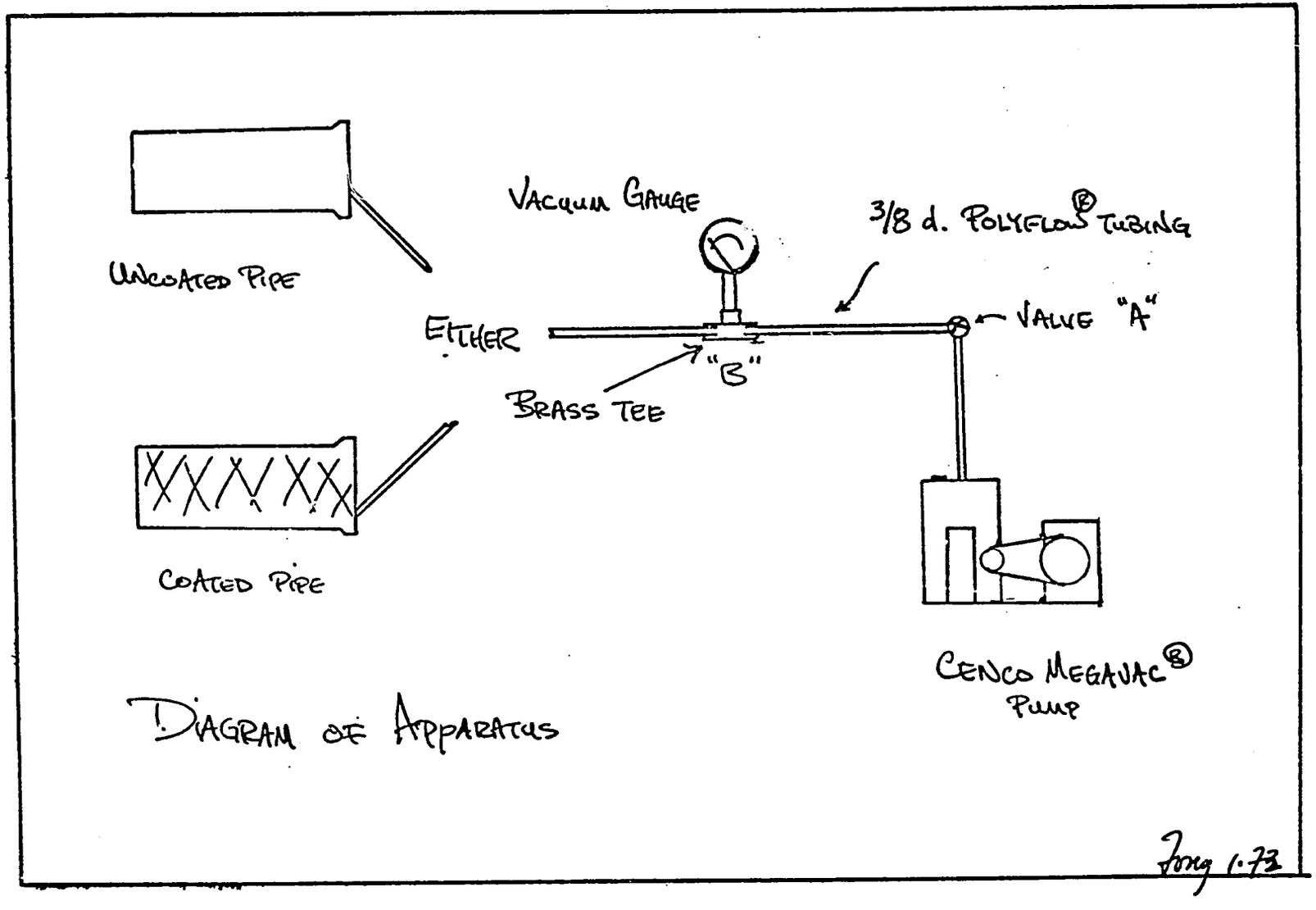
Uncoated Pipe
Vacuum Gauge
3/8 d. Polyflow® Tubing
Ether
Valve "A"
"B"
Brass Tee
Coated Pipe
Cenco Megavac®
Pump
Diagram of Apparatus
Fong 1.73

FIGURE II

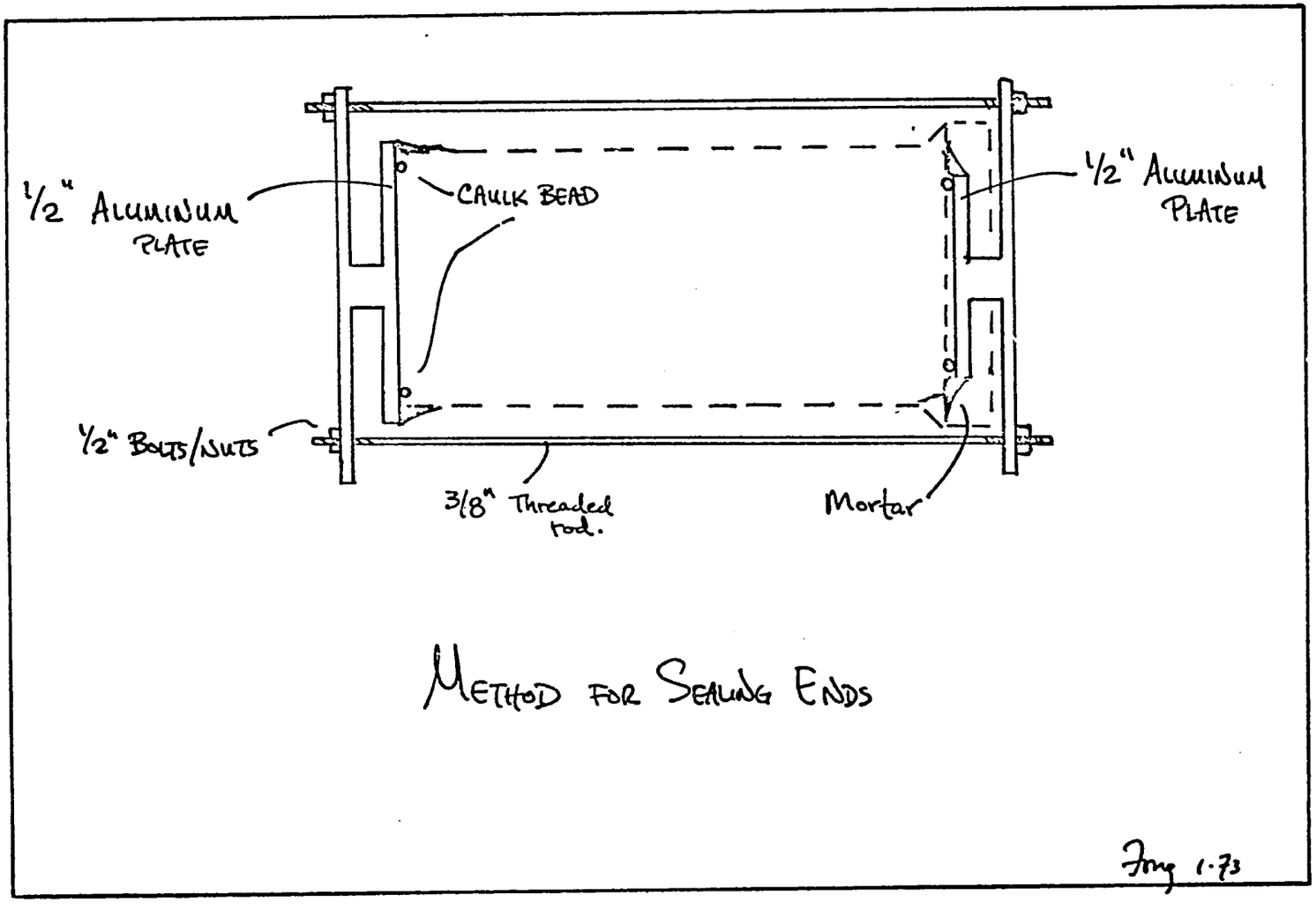
1/2" ALUMINUM PLATE
CAULK BEAD
1/2" ALUMINUM PLATE
1/2" BOLTS/NUTS
3/8" Threaded rod.
Mortar
METHOD FOR SEALING ENDS
Fig 1.73

FIGURE III

pressures in the sealed pipe (maximum 27" Hg). The bead was sucked into the pipe. After several unsuccessful reapplications and trials with other similar sealing compounds, it was decided to cover both seams with a quick-drying hydraulic cement, Fast Plug(R), and to coat them with a double layer of coal tar epoxy and to patch all leaks with a silicone rubber patching compound (GE Silicone Construction Sealant). It worked.

The very rough finish of the pipe ends accounted for most of the problem. It is suggested that either grinding, sawing, or simply casting an end into concrete be used in the future.

Procedure

The procedure adopted for both experiments was similar. (a) The pump would be switched on and the valve opened. (b) When a specified vacuum was reached, the valve would be closed and the pump shut off. (c) For the uncoated pipe, the pressure reading (inches of Hg vacuum within the pipe) would be recorded by hand at three second intervals. For the coated pipe, this was done at six second intervals. (d) If a leak developed, it was sealed and the data discounted.

Data

Experiment One. The pipe was evacuated to a maximum achievable vacuum of 7.6" Hg after twenty-five minutes of continuous pumping. Forty runs of approximately three minutes duration each were made. The pressure difference across the

wall of the pipe versus time is given with the spread of the data.

PRESSURE DIFFERENCE VS. TIME

UNCOATED PIPE

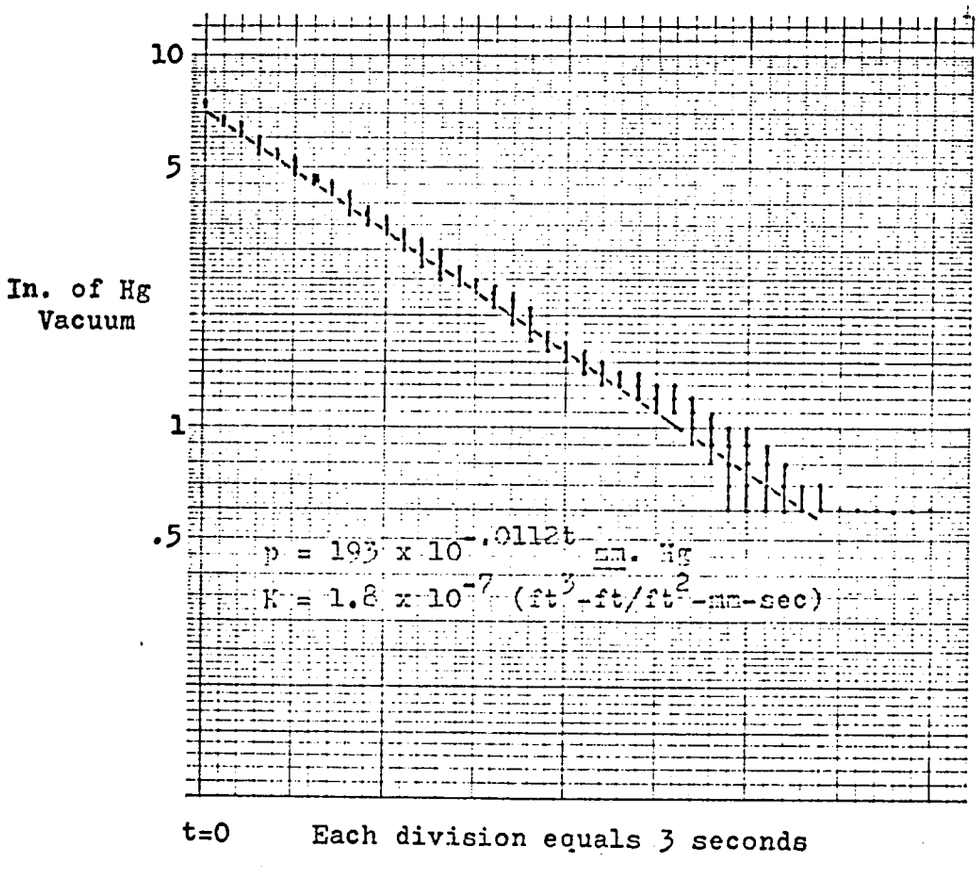

GRAPH I

Experiment Two. The pipe was coated per manufacturer's suggestions and sealed as described above. After curing, it was evacuated to a maximum achievable vacuum of 26.5" Hg after 25 minutes of continuous pumping. Fifteen runs of approximately 30 minutes duration each were made. The pressure difference across the pipe walls versus time is given with the spread of the data.

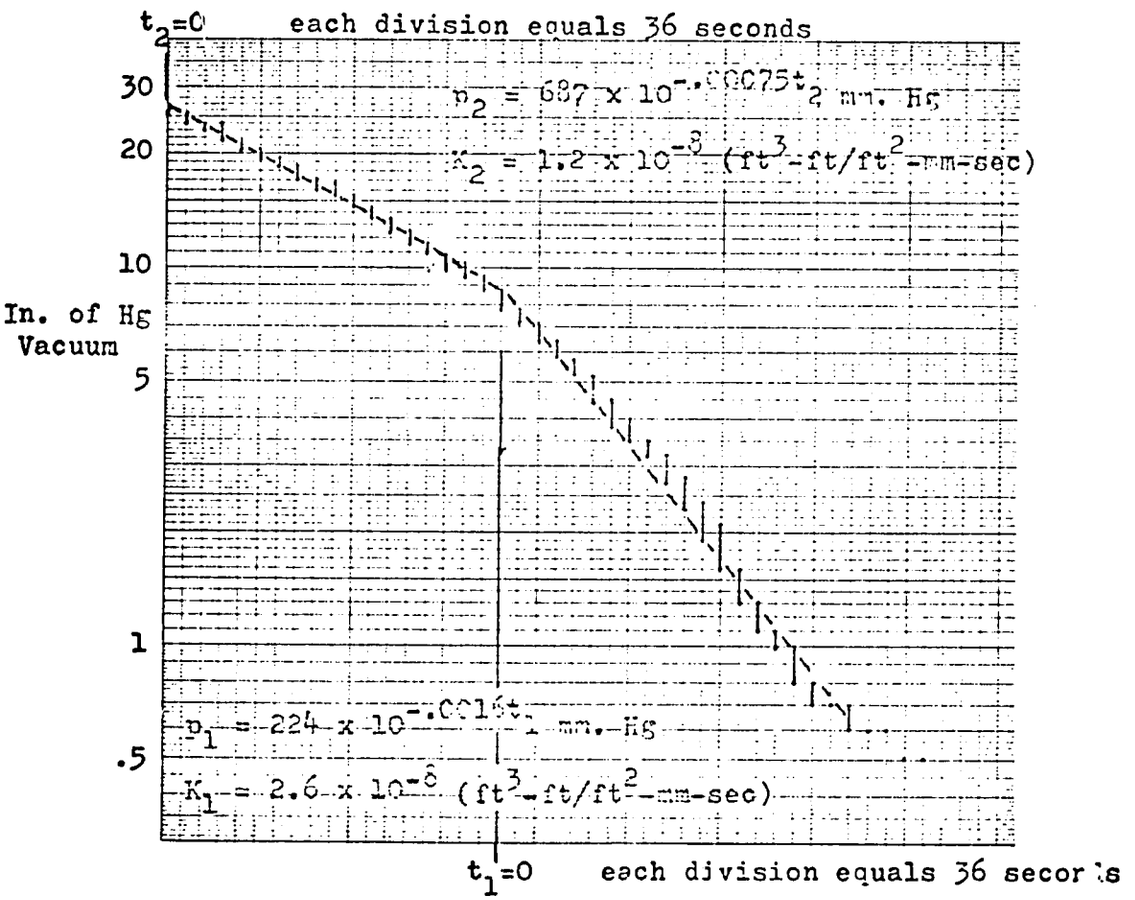

PRESSURE DIFFERENCE VS. TIME

COATED PIPE

GRAPH II

The coating. The primer is a flexible coat which bonds very well to concrete and conforms to the rough surface of the pipe. It is similar to latex paint when wet. It yields very slightly to pressure like a hard rubber and is black in appearance with a glossy enamel finish.

The coal tar epoxy is a hard coat which bonds tightly to the primer and is very viscous when wet. It tends to smooth rough areas and depressions. It is hard and does not yield to pressure. It is black with a glossy enamel finish. A section of a one quarter inch thick piece showed small entrapped air bubbles.

During the experiment, several hair cracks developed on the surface but there were so few as to be insignificant. In spots at the pipe seams which leaked, the epoxy coat noticeably sagged before it burst and the coating appeared to deform over large (1/64") holes during tests.

Discussion of Results

A. Introduction. Results are presented in the form of a permeability coefficient K which is defined as:

$$\frac{dn}{dt} = -KA\left(\frac{\Delta p}{\Delta x}\right)$$

where $\frac{dn}{dt}$ is the number of moles of air per unit time permeating into a closed volume V, driven by a pressure difference $(p_1 - p_2)$, $p_1 > p_2$, through a porous wall of thickness Δx and area A as shown:

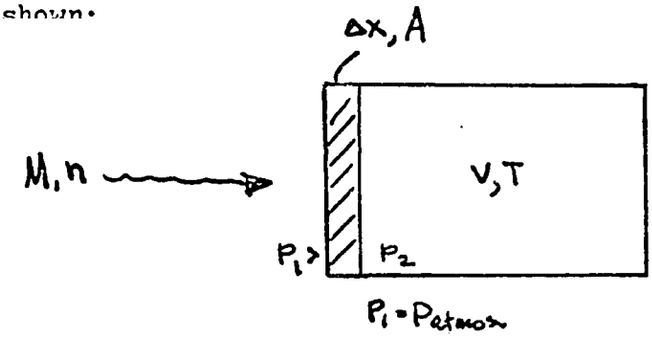

In a fluid obeying the gas law and assuming an isothermal process:

$$p_2 V = nRT$$

and $$\frac{dn}{dt} = \frac{V}{RT}\frac{dp_2}{dt}$$

so that $$K = -\frac{V}{ART}\frac{dp_2}{dt} \Big/ \frac{\Delta p}{\Delta x} \qquad \text{(gm-mole-ft/ft}^2\text{-mm-sec)}$$

$$K = -(.0353)(22.4)\left(\frac{V}{ART}\right)\left(\frac{dp_2}{dt}\right) \Big/ \left(\frac{\Delta p}{\Delta x}\right)$$

$$\text{(ft}^3\text{-ft/ft}^2\text{-mm-sec)}$$

for $R = 2.202$ (mm-ft^3/deg.^{o}K-gmole), p_n expressed in mm. of Hg, V,A,x in ft^n, and t in seconds.

B. Experiment One. The straight line fit of the results in Graph I implies $\Delta p(t)$ is of the form:

$$\Delta p(t) = P_o \times 10^{-At}$$

which confirms the assumption that K is independent of pressure and only a property of the pipe to a first approximation. For the uncoated concrete pipe, then:

$$\Delta p = 193 \times 10^{-.0112t} \text{ mm. Hg}$$

$$\text{and} \quad K = 1.8 \times 10^{-7} \ (\text{ft}^3\text{-ft/ft}^2\text{-mm-sec})$$

This value for K is about 40% greater than the results of the theoretical model given below. An exhaustive literature search has disclosed the following results from other experimenters for bare concrete, as shown in Table I.

Clearly, the scatter is wide, pointing to a need for systematic research and a standardization of procedures, specimens, and preparation. However the relative close agreement of the theoretical and experimental results suggests that Adzumi's model approximates flow behavior in concrete. It is unfortunate that, due to limited pumping capability, higher vacuum could not be achieved.

Source	$K(ft^2\text{-}ft/ft^2\text{-}mm\text{-}sec)$	W/C Ratio By Weight	Comments
Present experiments	1.8×10^{-7}	.3 - .5	Steam-cured, then long period of air-curing. Full size model.
OSW report	$.29 \times 10^{-7}$	.55	Fog-cured, then oven-dried for 3 days. Small size about 6".
Loughborough	$.031 \times 10^{-7}$	.5	Oven-dried, cured indoors. 6" diameter, 3" long.
Waters	$.032 \times 10^{-7}$	unspecified	Cured indoors. 4"-9" thick.
Adzumi	1.1×10^{-7}	THEORETICAL MODEL	

TABLE I

COMPARISONS WITH OTHER RESULTS

C. Experiment Two. The form of the results in Graph II suggests two different types of flow are present differentiated by the vacuum level within the pipe.

The first type, occurring at pressures between 0 mm. and 224 mm. of vacuum, is defined by:

$$\Delta p = 224 \times 10^{-.0016t} \text{ mm. Hg}$$

$$\text{and} \quad K = 2.6 \times 10^{-8} \ (ft^3\text{-}ft/ft^2\text{-}mm\text{-}sec)$$

This is an improvement in impermeability by a factor of seven.

The second type of flow, occurring at pressures between 224 mm. and 687+ mm. of vacuum, is defined by:

$$\Delta p = 687 \times 10^{-.00075t}$$

$$\text{and} \quad K = 1.2 \times 10^{-8} \ (ft^3\text{-}ft/ft^2\text{-}mm\text{-}sec)$$

This represents an improvement in impermeability by a factor of fifteen.

The diminished level of inflow is obviously due to a decrease in the number and size of leakage paths. As for the two regions flow, outgassing of the concrete wall which decreases with time could partially explain the different K's for the two regions. Another partial explanation would be that in the lower pressure region, a combination of Poiseuille and Knudsen flow occurs as in our model for the uncoated pipe. However in the high pressure region, due to deformation of the epoxy membrane or the more flexible primer, the orifices of capillaries that were once large enough to permit Poiseuille flow become reduced in size so that Knudsen flow

predominates. (See diagram.) Since Knudsen flow is proportional to p while Poiseuille flow is proportional to p^2, a decrease in K occurs.

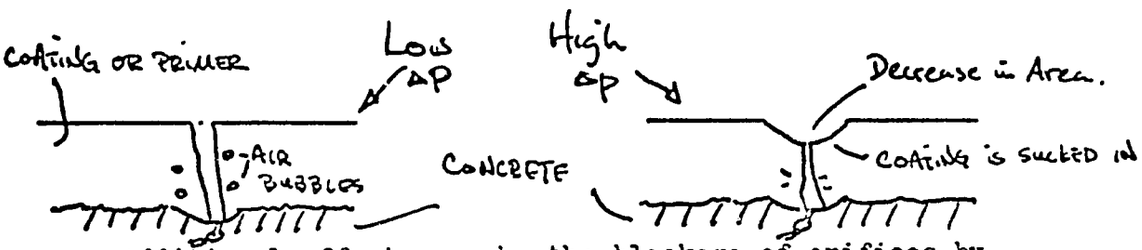

Additional effects may be the blockage of orifices by the deformation of the coating. The orifices will open up as the pressure inside the pipe rises. A similar effect could occur from the actual movement of microscopic solid particles on or in the concrete.

PERMEABILITY OF CONCRETE

Permeability is the property which allows the passage of vapor or gas under pressure through a porous solid. It is determined by many factors. Primary is the physical structure of the material, so we shall first examine the pore/capillary system of concrete, then other factors affecting concrete permeability to air will be sketched. Finally, an examination of the different flows that exist and presentation of a semi-empirical theory elaborated by Adzumi for porous ceramic plates will be given.

Pore/Capillary System of Concrete

A. Introduction. The permeability of concrete is determined principally by the overall pore/capillary structure which is the size of individual pores and capillaries, the extent of their continuity, and their total number, taken together. Experimenters have shown for refractory materials with physical structures similar to concrete that porosity (total pore volume) or pore size alone are not related to permeability. To understand the significance of the various pore types and to control them, it is necessary to understand the manner in which they originate, the factors affecting them, and the limits within which their quantities may vary.

Good concrete is composed primarily of cement paste aggregate and an air void component, natural and purposely entrained. The pores formed in the original plastic concrete

are either water or gas filled. After the concrete has hardened, the water pores may dry or the air pores may fill with water depending on the history, external moisture conditions, and the dimensions of the concrete member.

B. Capillaries. In fresh cement, the water-filled space is available for the formation of hydration products. As hydration proceeds, this volume, initially determined by the water-cement ratio, is reduced by the formation of hydrated gel which has a bulk volume larger than the unhydrated cement. The part that is not filled with hydration products constitutes the capillary system of the paste. If the original capillary space is low (W/C approximately .35 by weight), the bulk volume of gel will eventually fill all space and produce no free capillary space. At higher water-cement ratios, larger volumes of capillaries may be produced. This capillary system may be visualized as a submicroscopic system of randomly distributed pores with a variety of sizes and shapes, typically from 8×10^{-6}mm. to 1.3×10^{-2}mm. in equivalent diameter. They comprise from 0% to 30% (in .70 W/C ratio concretes) of the paste volume and may or may not be interconnected.

C. Gel pores. There is another system of pores integral to the gel known as gel pores, varying from 1×10^{-6}mm. to 8×10^{-6}mm. in diameter. They comprise from 25% to 28% of the gel volume. They are usually blocked to air flow by

strongly adsorbed and not easily evaporable or moved water, and hence do not concern us.

D. Aggregate pores. Aggregate comprises about 75% of concrete volume and each particle is completely encased in cement paste. Its porosity ranges from 0% to 20% by volume. In most aggregates, the pore spaces are about the size of intermediate paste capillaries.

E. Air voids (pores). Concrete contains air voids either accidentally entrapped or purposely entrained. The former range to 2mm. in diameter. The latter are in the range of .025mm. to .050mm. in diameter and comprise about 1% to 10% of the total volume of concrete.

Factors Affecting Permeability

Though no thorough research into the air permeability of concrete has been made, an extensive literature search (in English only) has disclosed the effects of many factors. The W/C ratio is one of the most important, since whatever permeates through concrete must completely pass through the paste and this ratio governs the capillary volume. For example, there is a thousand fold reduction in water permeability with a W/C ratio reduction from .8 to .4. The air permeability of concrete has been found to be inversely proportional to area. The effect of humidity is to decrease permeability through adsorption of water in the pores, hence

blockage of flow paths. Temperature effects have not been investigated, though it would be expected that the higher mean velocity with increasing temperature would increase the ability of a gas to seek out a flow path. However, boiling temperatures reduce permeability, probably a humidity effect rather than a temperature effect. Freezing and thawing cycles that do not induce cracking seem to have no effect. Exposure to weather and wind has been found to evaporate pore water resulting in drastically increased air permeabilities, a consideration in selecting curing methods. It would seem that air entrainment would increase permeability but it appears not to be the case because it reduces segregation (fissures and honeycombing) and permits reductions in the W/C ratios. The addition of fly ash or pozzalan has a beneficial effect. Careful grading of aggregate is important in reducing permeability. It has been suggested that prestressing and reinforcement may decrease or eliminate permeability. It should be added that passage to air does not include other gases. There has been no correlation made between air and water permeabilities. Factors which affect the water permeability with unknown effect on air impermeability are: non-isotropism, the treatment of surfaces (cast, sawed or sand-blasted), the downstream medium (air or water), the effects of the nature and impurities in the air, and electrical conductivity between the faces.

A Model of Flow in Concrete

A. Types of flow. For the pore size and pressure range of interest, two types of flow concern us: (1) laminar viscous flow (Poiseuille flow) occurring at a few atmospheres pressure and ordinary dimensions, and (2) molecular streaming (Knudsen flow) occurring when the capillary radius (5×10^{-6}mm. upwards) is of the same order of magnitude or smaller than the mean free path of air (6.7×10^{-5}mm.) or low pressures.

B. Poiseuille flow. When air flows through a cylindrical capillary without turbulence or slip, the flow rate-pressure relation is of the form:

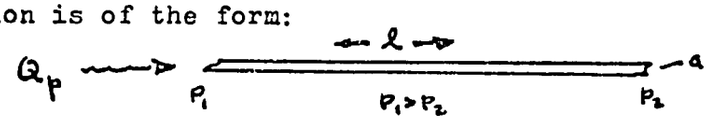

$$Q_p = K_p \frac{a^4}{l} \Delta p \; p_{av} = K_p \frac{a^4}{l} \Delta p \; \frac{(\Delta p + 2p_2)}{2}$$

where Q_p = quantity of gas per second (e.g. mm-l/sec)
a = capillary radius
l = capillary length
Δp = the pressure difference $(p_1 - p_2)$
p_{av} = the pressure average, $\frac{(p_1 + p_2)}{2} = \frac{(\Delta p + 2p_2)}{2}$

The relation is derived by using a compressible fluid obeying the gas law and by assuming an isothermal flow process in the usual incompressible Poiseuille analysis.

C. Knudsen flow. The requisite condition is that the capillary radius be smaller than the mean free path of the gas. Here, flow is governed by molecular-wall collisions

at the mouth and inside walls of the capillary rather than by intermolecular collisions. By considering the capillary walls covered with randomly distributed projections of atomic dimensions, and molecular effusion at the orifice, Knudsen has shown that the flow rate-pressure relation is of the form:

$$Q_k = K_k \frac{a^3}{l} \sqrt{\frac{T}{M}}\, \Delta p$$

for completely random flow where Q_k, a, l, Δp are defined above, and

T = absolute temperature

M = molecular weight of the gas

D. <u>Adzumi's model for a porous plate.</u> Adzumi has elaborated a semi-empirical theory for flow through porous ceramic plates based on the assumption that the plate is perforated with fine capillaries whose radii change along their length. Each capillary is seen as large numbers of different size capillaries arranged in series with each composite capillary in parallel with all other capillaries.

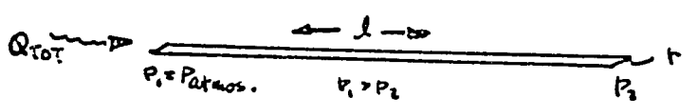

Consider a single capillary of length l and radius r. At medium pressures, Adzumi considers the flow to be a superposition of Poiseuille and Knudsen flow, so that:

$$Q_{total} = Q_k + \gamma Q_p = K(p_1 - p_2)$$

where Q_p = the Poiseuille contribution

Q_k = the Knudsen contribution

γ = a coefficient of slip taken to be .9

and $K = A \frac{r^4}{l} p_{av} + \gamma B \frac{r^3}{l}$

The equivalent K_1 for n capillaries of radius r_i in parallel is:

$$K_1 = Ap_{av} \sum^{n} \frac{r_i^4}{l_i} + \gamma B \sum^{n} \frac{r_i^3}{l_i}$$

The equivalent K_2 for n capillaries in series is:

$$K_2 = Ap_{av} \frac{1}{\sum^{n} \frac{l_i}{r_i^4}} + \gamma B \frac{1}{\sum^{n} \frac{l_i}{r_i^3}}$$

For our model combining the two, we have:

$$K_T = Ap_{av} \sum^{n} \frac{1}{\sum^{n} \frac{l_i}{r_i^4}} + \gamma B \sum^{n} \frac{1}{\sum^{n} \frac{l_i}{r_i^3}}$$

$$= Ap_{av}E + \gamma BF$$

For air diffusing through a plate with a mean pore size about that of concrete, Adzumi has found:

$$A = 3.978 \times 10^5 \times \frac{1}{v}$$

$$B = 2.743 \times 10^4 \sqrt{\frac{T}{M}}$$

$$E = 1.5 \times 10^{-11}$$

$$F = 8.58 \times 10^{-7}$$

and $Q = (1.05 \times 10^{-6}) K_T \Delta p$ (mm-ft^3/sec)

where $K_T = AE\left(\frac{\Delta p + 2p_2}{2 \times 760}\right) + \gamma BF$

and p is expressed in mm., ν, in atm-sec (for air, viscosity= 1.76×10^{-4}), $\gamma = .9$, and M is the molecular weight of the gas. T is taken as 298°K. Δp is Δp_{ave}=3.8"=97mm Hg.

Calculations give a theoretical value for the permeability constant K of 1.1×10^{-7} ft^3-ft/mm-ft^2-sec, a discrepancy of 39% from experimental results.

For detailed derivation, please see Appendix.

CONCLUSIONS

Though a great deal of investigation must still be made into the air permeability of concrete and coatings before an optimal operational heat exchanger can be fabricated, some lessons can be learned from the present experiments to guide manufacture and future experimentation:

1. The emergence of the W/C ratio and curing as the primary factors affecting permeability.
2. The great increase in permeability due to prolonged outdoor curing which even overshadows the salutary effects of a low W/C ratio (.4).
3. The surprisingly little effect of an apparently airtight coating which points to the need of studying the permeability of coatings.
4. The important effect of outgassing from concrete in permeability measurements.

Though a semi-empirical model for flow behavior exists, determination of coefficients specifically for concrete must be made since no consistent data exist, as shown by the wide scatter of past results. Standard testing procedures and specimen sizes, shapes and mixes must be adopted for testing, and detailed systematic studies of the effects of W/C ratio, fine aggregate grain size, coarse aggregate sizes and composition, mix proportions, curing cycles, flow paths and creep are

needed. The possibility of mix additives for integral air proofing--from epoxies to shredded rubber tires--should be considered. Further study into the suitability of coatings for both inside and outside the containment should be made. Obviously, all this must be done with the capital, natural resources, and the technical limitations of those people to be served kept in mind.

APPENDIX

ADZUMI'S THEORETICAL MODEL FOR FLOW THROUGH POROUS SOLIDS

The model we use for the concrete pore/capillary system is that all pores are parallel and each pore is composed of short pores of various diameters. It has been shown by Adzumi* that the quantity of gas flow per unit time t through a capillary is of the form:

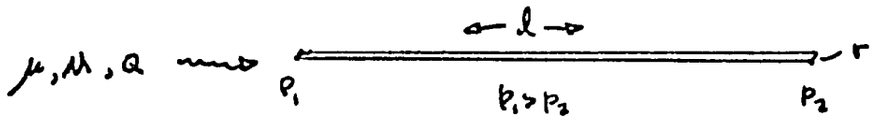

$$Q = K(p_1 - p_2) \text{ (mm-cc)}$$

where $$K = A\frac{r^4}{l}p + \gamma B\frac{r^3}{l}$$

and $$A = 5.236 \times 10^2 \frac{1}{n}, \quad B = 3.05 \times 10^4 \sqrt{\frac{T}{M}}$$

where $p = \frac{(p_1 + p_2)}{2}$ and p_1 and p_2 are the pressures at t end of a capillary of length l and radius r, T is the temp ature in degrees K, M the molecular weight, and γ is a coefficient of slip depending on pressure. K may be inter preted as a conductance, the quantity of flow per unit tim per unit pressure.

This formula holds over a large range of pressures and represents a superposition of Knudsen and Poiseuille flow. For capillaries in parallel and in series, we have the following results:

*Bull., Chem. Soc. Japan, Vol. 12, 1937, 292 ff.

For two tubes in parallel:

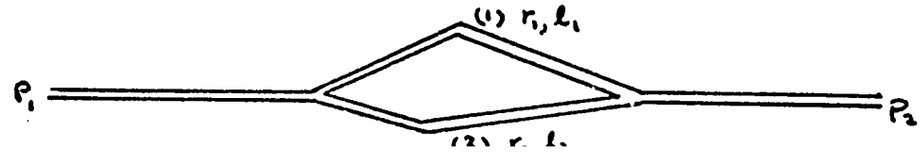

$$Q_1 = K_1 \Delta p \quad \text{where} \quad K_1 = Ap\frac{r_1^4}{l_1} + \gamma B \frac{r_1^3}{l_1}$$

$$Q_2 = K_2 \Delta p \quad \text{where} \quad K_2 = Ap\frac{r_2^4}{l_2} + \gamma B \frac{r_2^3}{l_2}$$

$$Q_{total} = Q_1 + Q_2 = K_2' \Delta p$$

Following an electrical analogy: $K_2' = K_1 + K_2$ and

$$K_2' = Ap\left(\frac{r_1^4}{l_1} + \frac{r_2^4}{l_2}\right) + \gamma B\left(\frac{r_1^3}{l_1} + \frac{r_2^3}{l_2}\right)$$

For n capillaries in parallel:

$$K_n' = Ap \sum^n \frac{r_i^4}{l_i} + \gamma B \sum^n \frac{r_i^3}{l_i}$$

For capillaries in series:

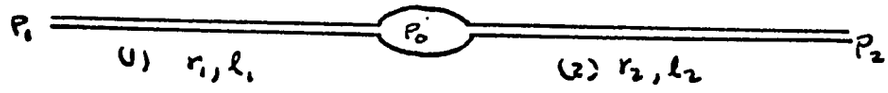

The quantity flowing through capillary (1):

$$Q_1 = A \frac{r_1^4}{l_1} \left(\frac{p_1 + p_o}{2}\right)(p_1 - p_o) + \gamma B \frac{r_1^3}{l_1} (p_1 - p_o)$$

And that through capillary (2):

$$Q_2 = A \frac{r_2^4}{l_2} \left(\frac{p_o + p_2}{2}\right)(p_o - p_2) + \gamma B \frac{r_2^3}{l_2} (p_o - p_2)$$

These two quantities are equal.

$$Q'' = K''(p_1 - p_2) = Q_1 = Q_2$$

where $$K'' = \frac{1}{K_1 + A \frac{r_1^4}{l_1} \left(\frac{p_o - p_2}{2}\right)} + \frac{1}{K_2 - A \frac{r_2^4}{l_2} \left(\frac{p_1 - p_o}{2}\right)}$$

Unlike the electrical analogy: $\frac{1}{K''} \neq \frac{1}{K_1} + \frac{1}{K_2}$

Nevertheless, Adzumi has shown by numerical substitution and experimentation that to within 1%, they may be taken to be equal. Thus:

$$K'' = \frac{1}{\frac{1}{K_1} + \frac{1}{K_2}} \qquad \text{within 1 \%}$$

When n capillaries are connected in series, the equivalent K may be taken as:

$$K'' = Ap \frac{1}{\sum^{n} \frac{1}{r_i^4}} + \gamma B \frac{1}{\sum^{n} \frac{1}{r_i^3}}$$

Hence the flow through a porous plate according to our model can be expressed as:

$$Q = K \Delta p$$

where $$K = Ap \sum^{n} \frac{1}{\sum^{m} \frac{1}{r_i^4}} + \gamma B \sum^{n} \frac{1}{\sum^{m} \frac{1}{r_i^3}}$$

$$= AEp + BF$$

$$= 3.979 \times 10^{7} \frac{1}{n} Ep + 2.743 \times 10^{4} \sqrt{\frac{T}{M}} F \text{ (atm-cc)}$$

where γ is taken to be .9

$$E = \sum^{n} \frac{1}{\sum^{m} \frac{1}{r_i^4}} \qquad \text{and} \qquad F = \sum^{n} \frac{1}{\sum^{m} \frac{1}{r_i^3}}$$

The above derivation also affords a method for calculating a mean radius and surface density (pores/area). If all the pores of a plate had a uniform radius R and are normal to the surface, n is the total number of pores, and d the thickness of the porous solid, then:

$$E = \frac{nR^4}{d} \qquad F = \frac{nR^3}{d}$$

and $R = \frac{E}{F}$, $N = \frac{F^4}{E^3}$

where N is the pore surface density.

Adzumi has determined E, F, and R for a number of porous materials. Present calculations for the flow through concrete are based on E and F values corresponding to a mean pore radius of 10^{-5} cm. The numerical results are given in the text.

BIBLIOGRAPHY

LIBRARY RESEARCH SUGGESTIONS

There has been very little written about the air permeability of concrete in the past. Only in the last ten years or so have researchers begun looking in the area because of incipient use of concrete in containment vessels in nuclear reactors. Research is usually in specialized applications, e.g. high humidity conditions, extra thicknesses, or prestressed members. Material rare. For research into methods of testing and an idea of general characteristics of permeability of porous solids, it is helpful to look into the literature of ceramics and refractories where the air permeability of these concrete-like materials is important and has been studied. For theory, Barrer's "Diffusion In and Through Solids" and Muskat's "Diffusion in Solids" are classics, but dates. They are summaries of work done in the field to date (1940's).

BOOKS

Barrer, R.M. Diffusion In and Through Solids. Cambridge: Cambridge Univ. Press, 1951.

Cohan, H.J. et al. Evaluation of Concrete and Related Materials for Desalinization Plants. U.S. Department of Interior, Office of Saline Water Report OSW PR390. Washington, D.C.: U.S. Govt. Printing Office, June 1968.

Coole, N. Physical Measurement and Analysis. Reading, Mass Addison-Wesley, 1963.

Darmstadter, J. et al. Energy in the World Economy. Baltin The Johns Hopkins Press, 1971.

Dushman, Saul. Scientific Foundations of Vacuum Technique. New York: Wiley, 1949.

Holkeboer, D.H. et al. Vacuum Engineering. Cambridge, Mass Boston Technical Publishers, 1967.

Kindleberger, C.P. Economic Development. USA: McGraw-Hill, Second Edition, 1965.

Norton, F.H. Refractories. New York: McGraw-Hill, 1968.

Roshenow, W.M. and Choi, H.Y. Heat, Mass and Momentum Trans New Jersey: Prentice-Hall, 1961.

U.S. Department of the Army. Technical Manual: Concrete and Masonry. Washington, D.C.: GPO, June 1970.

Waddel, J.J. ed. Concrete Construction Handbook. New York: McGraw-Hill, 1968.

JOURNALS AND ARTICLES

ACI Symposium on Creep of Concrete. ACI Publication SP9. Michigan: Amer. Concrete Inst., 1964.

Adzumi, Hiroshi. "Studies on the Flow of Gaseous Mixtures Through Capillaries; II The Molecular Flow of Gaseous Mixtures." Bull., Chem. Soc. Jap., Vol. 12, 1937, pp. 255-291.

Adzumi, Hiroshi. "Studies on the Flow of Gaseous Mistures Through Capillaries; III The Flow of Gaseous Mixtures at Medium Pressures." Bull., Chem. Soc. Jap., Vol. 12, 1937, pp. 292-303.

Adzumi, Hiroshi. "On the Flow of Gases Through a Porous Wall." Bull., Chem. Soc. Jap., Vol. 12, 1937, pp. 304-312.

Anonymous. "Air Permeability of Concrete." Concrete & Constructional Engineering. London: Vol. 60, May 1965, p. 166.

Brown, F.L. "Permeability of Hardened Cement Paste." ACI Jour., Vol. 39, 1942, p. 62.

Dolch, W.L. "Porosity." ASTM Special Technical Publication #169-A: Significance of Tests and Properties of Concrete and Concrete-Making Materials. ASTM, 1966, pp. 443-461.

Howe, W.L. and Hudson C.J. "Studies in Porosity and Permeability: Characteristics of Porous Bodies." Jour. Amer. Cer. Soc., Vol. 10, 1927, pp. 443-448.

Loughborough, M.T. "Permeability of Concrete to Air." Ontario Hydro-Res. Quar. Toronto: 1st Quar., 1966.

McCreight, D.O. "Permeability Data of American Refractories." Bull. Amer. Cer. Soc., Vol. 27, 1948, pp. 257-262.

Neville, A.M. "Hardened Concrete: Physical and Mechanical Aspects. ACI Monograph #6. Iowa: ACI and Iowa State Univ. Press, 1971.

Portland Cement Association. "Design and Control of Concrete Mixtures." Engineering Bull. 3. Skokie, Ill.: July 1968.

U.S. Department of Interior, Office of Saline Water. "Evaluation of Concrete and Related Materials for Desalinization Plants." Research and Development Progress Report #345. Washington, D.C.: GPO, May 1968.

Verbeck, G. "Pore Structure." ASTM Proc., Vol. 34, Part 1, 1934, pp. 383-392.

Verbeck, G. "Pore Structure." ASTM Special Technical Publication #169-A: Significance of Tests and Properties of Concrete and Concrete-Making Materials. ASTM, 1966, pp. 211-219.

Waters, T.C. "Reinforced Concrete as a Material for Containment." Symposium on Nuclear Reactor Containment Buildings and Pressure Vessels held in Glasgow, Scotland. London: Butterworths & Co., 1960, pp. 50-80.

OTHER

Porter Paint Company. Tarset Primer: Technical Specifications, 1971.

Porter Paint Company. Tarset Standard C-200: Technical Specifications, 1971.

Rashid, I. Personal communication.