A PLAN FOR A SURFACE IRRIGATION SYSTEM FOR THE TABOGA EXPERIMENTAL STATION

A Report Prepared for:
U.S. Agency for International Development
Costa Rica

By

J. E. CHRISTIANSEN, Prof. Emeritus
Agricultural and Irrigation Engineering

and

REX F. NIELSON, Assoc. Prof.
Soil Science and Biometeorology

UTAH STATE UNIVERSITY

Prepared Under
Basic Agreement AID/csd 3703
Contract Grant No. XEA-006-1

with

Technical Assistance Bureau
Agency for International Development
Washington, D. C. 20523

Logan Utah, April, 1973

TABLE OF CONTENTS

	Page
ACKNOWLEDGEMENTS	1
SUMMARY AND RECOMMENDATIONS	2
Recommendations	2
INTRODUCTION	3
AREA DESCRIPTION	4
Location	4
Topography	4
Figure 1. Location of Toboga Experimental Station	5
Soils	6
Figure 2. Experimental Area to be Irrigated	7
Crops	8
Climate	8
Table 1. Climate at Taboga Experimental Station	9
Table 2. Class A Pan Evaporation in mm.	10
Water Supply and Water Rights	11
Water Requirements	11
IRRIGATION SYSTEM	12
Plan for Surface Irrigation System	12
Figure 3. Plan for Proposed Irrigation System	13
Surface Irrigation by Border Strip and Furrow Methods	14
Preparation of Land for Surface Irrigation	15
Land Smoothing or Planing	15
Land Grading Procedure	15
Constructing Boarder Levees	16
Figure 4. Typical Cross Section of Border Strip	17
Figure 5. Ideal Cross Section of Border Strip	17
Furrows	18
Constructing Field Ditches	18
Use of Canvas Dams and Siphon Tubes	18

TABLE OF CONTENTS (continued)

Page

Figure 6. Flooding Border Strips with Siphon Tubes . 19

Figure 7. Furrow Irrigation Using Siphon Tubes . . 19

Figure 8. Sketch of Canvas Dam 20

Irrigation Structures 20

Headgate Structure. 21

Maintenance of System 22

DRAINAGE 22

Surface Drainage 22

Subsoil Drainage 23

Ground Water Observation Wells 23

Figure 9. Suggested form for Field Notebook . . 24

Ground Water Representation 25

Ground Water Map 25

Depth to Water Table Map 26

Ground Water Hydrograph 26

Planning a Drainage System 26

Equipment 27

PUBLICATIONS ON IRRIGATION 29

List of Publications Sent to Costa Rica 29

Other References on Irrigation 30

APPENDIX A 31

Table A-1. Chemical and Physical Characteristics of Soils . 32

Table A-2. Precipitation Media in mm 33

Figure A-1. Types of Concrete Block Irrigation Structures . 34

Figure A-2. Type of Slide Headgate 35

APPENDIX B 36

THEORY OF SURFACE IRRIGATION 37

Variable Gradient - Concave Longitudinal Profile . . 37

Table B-1. Dimensionless Parameters for Irrigation Profiles . 40

Figure B-1. Longitudinal Profiles for Border Strips & Furrows 41

Practical Application of Variable Slope Profiles . . 41

ACKNOWLEDGEMENTS

The authors would like to express appreciation for the information and services extended by many individuals in the Ministry of Agriculture, FAO and AID. Special thanks are extended to Ing. Alberto Vargas and Ing. Carlos Ramirez who served as counterparts, gracious hosts and guides on tours to the various areas of the country.

The opinions and recommendations are those of the authors and do not necessarily reflect those of USAID or Costa Rican officials.

SUMMARY AND RECOMMENDATIONS

This report is based on a brief trip to Costa Rica by J. E. Christiansen and Rex F. Nielson to provide technical assistance in the planning of an irrigation and drainage system for the Taboga Experimental Station in the Province of Guanacaste. A three-day visit was made to the area, and shorter visits were made to the Experimental Station at Alajuela in the Itiquis Irrigation Project near San Jose, and to the IICA Research Center at Turrialba. The report discusses briefly the climate, soils and crops of the area together with water supply requirements and availability.

A plan for an Irrigation System is presented together with a discussion of many problems pertaining to irrigation. The drainage problem is duscussed.

Specifications for equipment needed to construct the system and implement irrigation are included.

Recommendations:

1. The fields should be irrigated by surface methods rather than by sprinkling because of the high winds in the area.
2. The surface irrigation system layout should be essentially as shown in Figure 3 and discussed herein.
3. The construction of a subsurface drainage system should be deferred until the need is apparent and data regarding groundwater conditions and soil hydraulic conductivity have been obtained.
4. Another visit should preferably be made to the area by one of the team members at the time irrigation is to begin so that first hand instruction in irrigation techniques can be communicated to the field personnel responsible for the operation and maintenance of the irrigation system.
5. Some of the essential equipment needed should be ordered immediately so that the irrigation water can be used next fall if required.
6. The headgate structure at the upper end of the main canal should be designed by and installed under the supervision of an experienced civil engineer. Failure of this structure during flood flows on the Rio Canas could result in great damage.

INTRODUCTION

The following communication from AID describes briefly the assignment of the authors, J. E. Christiansen and R. F. Nielson, a Water Management Research Team from Utah State University.

> "The Contractor (consultants) will provide technical services to the USAID Mission in Costa Rica to assist USAID and the Research Division of the Ministry of Agriculture to design and establish a 250 acre experimental station for Irrigation and Drainage Research. The technical services to be provided shall include an irrigation agronomist and an irrigation engineer who are familiar with experimental designs, programs and problems related to irrigated agriculture to work with counterparts in Costa Rica to develop the New Research Station."

Further discussions with the Ministry of Agriculture and Livestock (M.A.G.) personnel in Costa Rica delineated the assignment as technical assistance in designing an irrigation and drainage system for approximately 60 hectares of land on the west side of the Taboga Experimental Station in Guanacaste Province. During the first phase, irrigation will be used to insure an adequate water supply during the rainy season for the production of stock seeds and breeding lines. As the project and capability develops it is intended the area will serve as an irrigation demonstration farm with an irrigation research capability.

The team spent the first two days visiting with personnel from the USAID, the Division of Investigation and Agronomy Department, Ministry of Agriculture of Costa Rica (M.A.G.), and the Food and Agriculture Organization (F.A.O). A visit was also made to the Meteorological Service. All available data concerning the Taboga Station was obtained and discussed with Ings. Alberto Vargas and Carlos Ramirez, M.A.G. This was followed by a three-day visit to Taboga accompained by Ing. Alberto Vargas, Chief of the Agronomy Department, to inspect the site and agricultural conditions in the surrounding areas of the Tempisque River basin. On-site discussions were held with Station personnel to further acquaint the team with the specific problems and assignment.

The following week a visit was made to the Itiquis Irrigation Project and the University Experimental Station at Alajuela. The Itiquis Project which was planned by F.A.O. is the first government irrigation project in Costa Rica.

A tour of some commercial irrigated cane areas was also made to view the capability of local farmers in developing irrigation agriculture.

The information gained from these on-site visits and conversations provided a background beneficial to completion of the assignment. Professor Christiansen made a half-day visit to see the IICA Research Center at Turrialba and discuss soils of Costa Rica with Dr. Warren Forsythe, Soil Physicist. He was accompanied by Ing. Ramirez.

AREA DESCRIPTION

Location

The Experimental Station at Taboga is located in the Guanacaste Province at an approximate latitude of 10° 20' north and longitude 85° 09' W. The area to be irrigated consists of about 60 hectares lying immediately west of the old channel of the Rio Higueron and directly south of the Cerro Eskameca. The Station is completely surrounded by the Hacienda (Hda.) Taboga which has its headquarters 5 kilometers due west of the area to be irrigated.

Access to the Experimental Station is via a graveled road connecting with the Interamerican Highway about 9 kilometers to the east, and about 10 kilometers south of Cañas. The location of the Experimental Station and the area to be irrigated is shown on the sketch map, Figure 1.

Topography

The topography of the area to be irrigated is ideally suited for surface irrigation by the border strip or furrow methods. There are two tracts of land lying on opposite sides of a natural shallow surface drain running in a southwesterly direction through the area. The tract on the west side of the drain consists of approximately 35 hectares and that on the east about

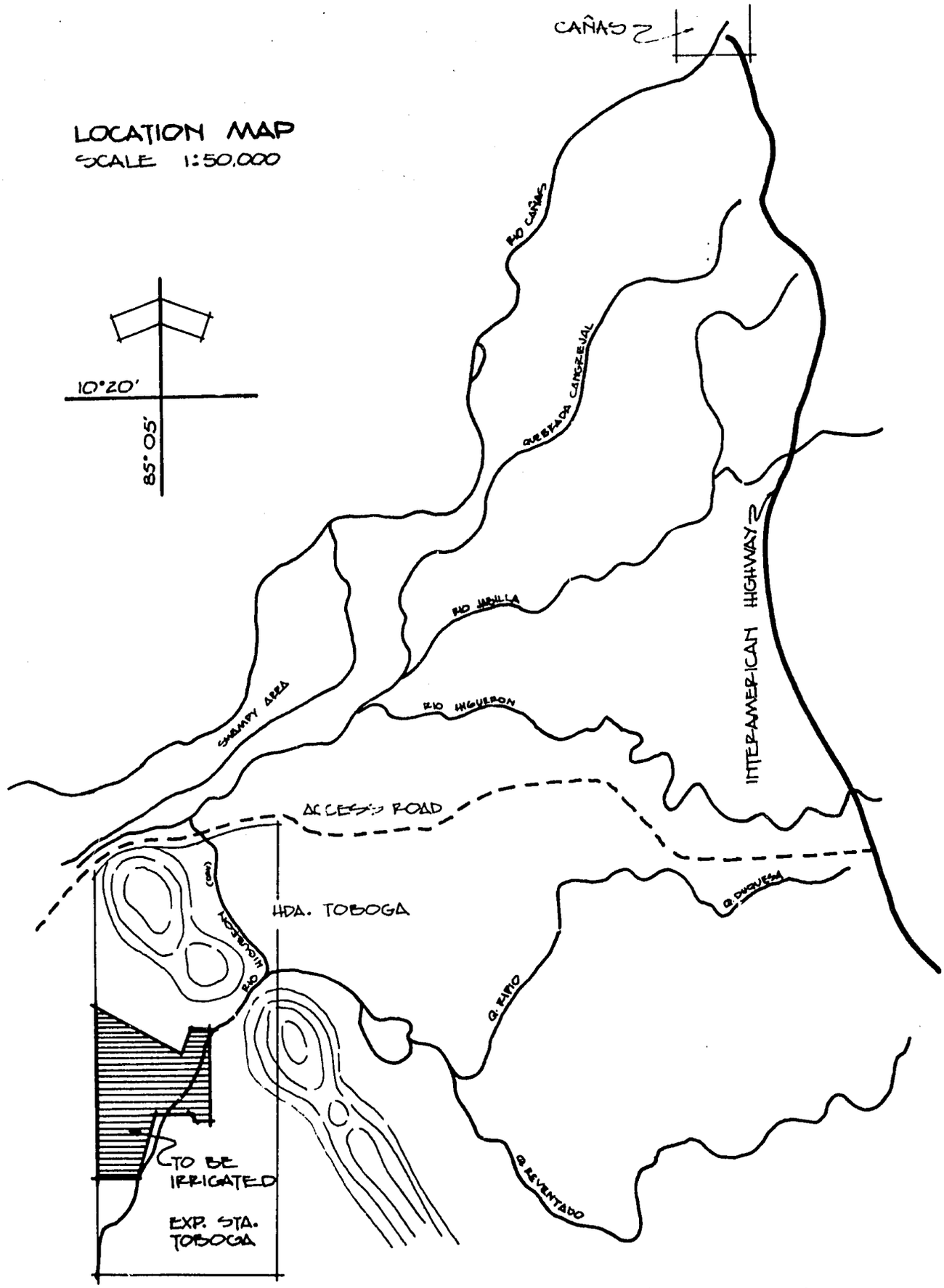

FIGURE 1. Location of Taboga Experimental Station with Respect to the Interamerican Highway and Cañas

25 hectares. The slopes in the field vary from a minimum of about 0.2% to a maximum of about 0.6% with some microrelief that can be eliminated with a relatively small amount of land grading and smoothing. These slopes are very suitable for surface irrigation. The topography is indicated on the sketch map, Figure 2, which was traced from a map provided by F.A.O.

Soils

The soils at the station are alluvium deposited on the flood plain of the Rio Cañas and Rio Higueron. The majority of the area is classified tentatively as Inceptisols, with a small area of Vertisols. Mechanical analysis of samples from pit number 5 (Inceptisols) show the following textures. Surface sandy clay, 10 cm. silt loam, 45 cm. sandy loam, 65 cm. sandy loam, 95 cm. silt loam and 110 cm. sand. Analyses of these soils are given in Table A-1 of the Appendix. The soils appear to have good structure with relatively high organic matter in the top 10 cm. The soil phosphorus and potassium levels are adequate. Discussions with the field survey staff suggests that the data from pit number five are typical of the entire area.

Since the soils are alluvial in origin it can be assumed that they are erodible. Controlled irrigation, however should not cause an erosion problem. The general slope of the area is approximately 1 per 1000 in a southwesterly direction, with the maximum slopes from the main ridge to the drains being somewhat higher. The elevation of the experimental area varies from about 7 to 9 meters above sea level. A dug well in the southwest part of the farm near the Rio Higueron had a water table at a depth of 2 meters when measured on January 24, 1973. Since this well was in the higher part of the area it would indicate a general water table level of from 1 to 1.5 meters below the surface over most of the area. The precipitation during the past rainy season was reported to be much below normal so it might be assumed that the water table is seldom below 2 meters. During the rainy season this water table rises to near the surface and at times some of the area is flooded.

The soils in the project appear to be well suited for irrigation with a minimum of problems, except for possible flooding and drainage during the rainy season.

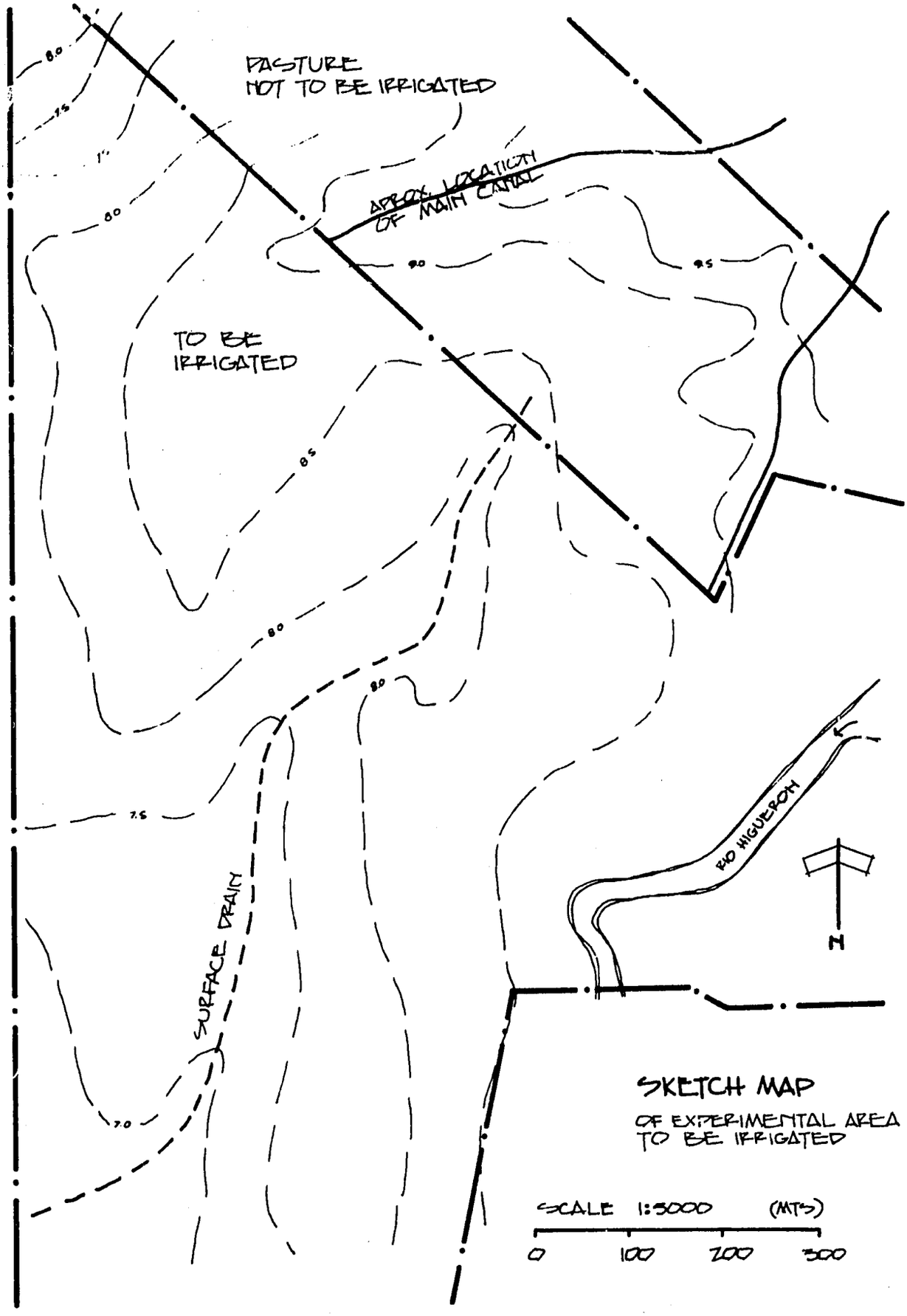

FIGURE 2. Experimental Area to be Irrigated

Crops

The principal crops grown in the Taboga area are sugar cane, pasture, and rice, with sorghum being grown in the dry season. Some pasture grasses are cut and baled for hay to be fed during the latter part of the dry season. A small amount of corn and some horticultural crops are also produced.

During this past season more than 30% of the rice crop was not harvested because of drought. Yields on the areas harvested were significantly reduced. Crops currently being grown are probably the ones best adapted for this area. With irrigation it is probable that yields can be both insured and increased. With a stable water supply it is likely that new crops can be successfully introduced, especially during the dry season. One of the principal advantages of irrigation is that it provides an opportunity to grow crops during the dry season.

The high winds that persist for several months during the dry season will restrict the use of wind sensitive crops such as bananas.

Climate

The climate at the Taboga Experimental Station might be described as fairly hot with a dry period from December through April and a rainy season from May through November. For the period of record, the mean temperature was about 27° C during the rainy period and 28° C during the dry period. The relative humidity ranges from about 72% during the dry months to approximately 90% during the rainy season. The prevailing wind direction is from the north east with mean velocities at 6 meters height of about 15 km. per hour during the dry season and from 4 to 8 km. per hour during the rainy months. The sunshine percentage during 1972, the only year of record, varied from 40% in June to 91% in February. The monthly precipitation varies from 0 in February and March to 420 mm. in September and 403 mm. on October. In 1972 it was appreciably below normal during the period July through October with a total of only 366 mm. for 4 months as contrasted with 1970 when the precipitation for the same 4 months totaled 1379 mm. The first month of record at this station was June, 1969, and the record for 1971 was not available. The aver-

TABLE 1 Climate at Tobogа Experimental Station
Latitude 10° 20' N, Long. 85° 12" W, Elev. 20 M.

Year	Jan	Feb	Mar	Apr	May	June	July	Aug	Sept	Oct	Nov	Dec
						Monthly Precipitation in MM						
1969	-	-	-	-	-	267.3	179.5	336.6	313.8	553.1	143.2	15.1
1970	0.5	0.0	0.0	57.4	133.5	159.1	197.4	358.1	420.5	402.9	76.3	24.5
1972	18.9	0.0	34.5	28.4	320.2	206.4	61.3	94.5	146.5	63.3	218.0	-
						Mean Temperature - °C						
1969*	28.4	28.6	29.1	-	29.9	27.9	27.5	27.0	27.2	26.3	26.7	27.0
1970	27.4	27.9	28.1	28.7	27.8	27.6	26.8	26.6	26.3	26.3	25.7	26.5
1972	26.1	26.7	27.2	28.3	27.2	26.4	27.5	27.2	26.6	26.6	26.4	-
						Evaporation - Class A Pan - mm						
1972	171.1	242.9	214.8	213.6	116.8	85.2	149.1	110.6	49.5	87.6	74.5	-
						Evaporation - Piche, mm						
1971	127	190	226	204	118	54	80	56	39	43	66	133
1972	149	207	224	195	102	72	99	93	60	56	57	-
						Mean Relative Humidity - %						
1970	80	71	76	75	84	87	91	91	92	90	86	90
1972	79	74	72	72	85	-	80	75	80	80	79	-
						Mean Wind Velocity, KM per Hour at 6 m.						
1971	15	15	16	13	7	8	7	5	4	5	5	12
1972	15	15	14	12	6	7	9	7	7	8	8	8
						Prevailing Wind Direction - NE.						
						Sunshine, Percent Possible						
1972	65	91	79	77	46	40	42	43	50	51	50	-

* Temperature for 1969 was for Cañas about 10 KM to the NE.
Data supplied by the Servicio Meteorologicio de Costa Rica.

age annual precipitation for the months of record was 1716 mm. The drought in 1972 resulted in a failure of the rice crop on the Experimental Station.

A summary of the available climatic data for the Taboga Station is given in Table 1.

Hargreaves* has recently summarized the available precipitation records at 11 stations in north west Costa Rica. Four of these stations are at the lower elevations in the Tempisque drainage area. Hargreaves' "Tabla ' Precipitacion Media En mm" is reproduced in the Appendix as Table A-2 with these 4 stations underlined, together with the mean values for three of the stations, Liberia, La Pacifica (near Cañas) and Puntarenas. The data are given for comparison with the limited data for the Taboga station.

Hargreaves has also summarized the available Class A pan evaporation records at Hda, Tempisque and Puntarenas and Arenal, which are given here in Table 2.

The evaporation at Taboga appears to be more nearly like that at Hda. Tempisque during the dry season but more like Puntarenas during the rainy season.

TABLE 2. Class A Pan Evaporation in mm

Station	Jan.	Feb.	Mar.	Apr.	May	June	July	Aug.	Sept.	Oct.	Nov.	Dec.	Annual
Hda. Tempisque Mean, 5 years	202	235	279	254	227	144	125	133	120	120	109	135	2101
Hda. Tempisque 1970	170	244	245	285	228	210	113	133	102	130	121	145	2126
Puntarenas 1970	118	203	189	176	126	101	94	101	97	115	102	119	1541
Arenal 1964-70	70	86	115	111	103	94	86	99	102	77	60	68	1075
Arenal 1970	83	62	100	104	110	107	92	113	97	61	41	61	1031

* Hargreaves, G.H. "Necesidades y Requerimientos Para Irrigacion, Arenal y Vecindades. UNDP-WMO-PHCA Publicacion No. 87, San Jose, Costa Rica, Junio, 1972.

Water Supply and Water Rights

The water supply for the area is from the Rio Cañas and Rio Higueron which now join in a large swampy area to the north of the Experimental Station. Several other smaller streams including the Rio Jabetta and Quebrada Cangrejal enter this same swampy area. The water right is reported to be for 200 liters per second from the Rio Cañas. The water will be diverted from the present channel at a point about 440 meters northeast of the culvert under the roadway northeast of Cerro Eskameca. It will be conveyed through a new canal now being excavated around the north and east side of the Cerro near the old channel of the Rio Higueron to a high point on the north side of the field to be irrigated. This new canal is reported to be on grade of 1 to 1,000 and appears to have ample capacity for a flow of 200 liters per second if properly maintained and kept cleared of vegetation.

Water Requirements

The monthly water requirements for such crops as upland rice, sugar cane and sorghum would be of the same order of magnitude as the pan evaporation which averages approximately 9 mm. per day during February, March and April and somewhat less during the other months. If the flow of the Rio Cañas is sufficient to provide the 200 liters per second to which the Experimental Station is entitled, the water supply should be ample. This assumes that the seepage losses in the main canal will not be excessive. Time did not permit an analysis of flow records on the Rio Cañas.

Considering the dependable rainfall, PD, the average potential evapotranspiration, ETP and the estimated wind velocity for the area, Hargreaves* has estimated the potential moisture deficiency, ETDF, on a monthly basis. The values for the dry season are:

Month	ETP	PD	ETDF	Month	ETP	PD	ETDF
Dec	103	5	99	Mar	155	0	155
Jan	124	0	124	Apr	152	14	138
Feb	135	0	135	May	123	94	29

* Hargreaves, G. H. See reference p. 6.

IRRIGATION SYSTEM

Plan for Surface Irrigation System

The general plan for the proposed surface irrigation system is shown in Figure 3. For the tract lying west of the surface drain the water will be taken from the main canal at its termination at the fence line between the pasture and field to be irrigated. Here the water will be diverted into Head Ditch A which will flow to the northwest and Head Ditch B which will flow to the southeast. These two head ditches should be about 8 meters from the fence to allow for a graveled roadway between the fence and ditch. Both of these head ditches, A and B will be terminated in the two surface drains marked Drain #1 and Drain #2 so that the water can be properly regulated and the surplus wasted into the drains.

There will be two or more field ditches diverting from Head Ditch A (two shown as A-1 and A-2) and two from Head Ditch B. These field ditches will distribute the water to either border strips for rice and possibly sorghum (if planted in the customary closely spaced rows) or to furrows for widely spaced rows (80 cm. or more) for corn, cane and other row crops. The topography is such that these border strips and furrows could parallel the head ditches.

It is suggested that field ditches A-1 and B-1 be placed about 8 meters apart to allow for a roadway between them. This will provide convenient access to these ditches for regulation of the water on to the field. This roadway should probably be graveled or planted to grass so that they could be transversed during the rainy season.

At the lower ends of the furrows or border strip between field ditches A-1 and A-2 (and B-1 and B-2) there should be small ditches to catch the runoff from these strips or furrows. This ditch will be on the upslope side of field ditches A-2 and B-2 and again should be about 5 meters from them to allow for a field roadway between them. These small ditches would be temporary and made just before the crops are to be irrigated. At intervals along these ditches the water could be diverted back into field ditches A-2 and B-2 in order to reuse the runoff water, or they could be continued to the ends

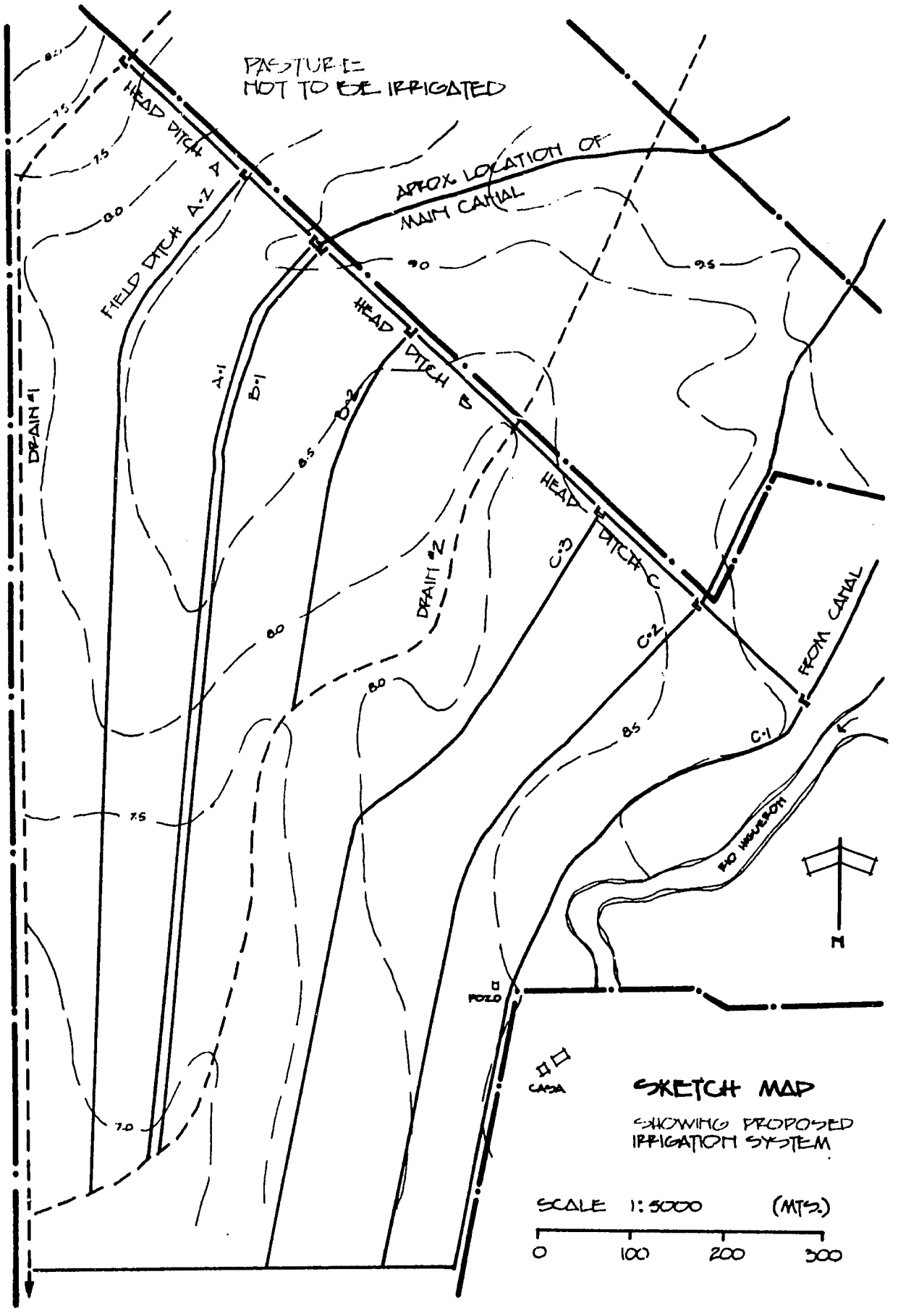

FIGURE 3. Plan of Proposed Irrigation System

of the field and the runoff water wasted into the drains. Generally it is not possible to irrigate by surface methods without wasting some water by runoff at the lower ends of the furrows or border strips. This water must be properly managed to prevent flooding of areas where the water is not wanted.

For the tract lying east of surface Drain #2, the water would be diverted from the main canal at some appropriate point to the north of the area shown on the sketch map, Figure 3, and carried in another ditch to the fence line near the Rio Higueron where it would be diverted into Head Ditch C or Field Ditch C-1. This field ditch would follow along the edge of the field parallel to the Rio Higueron and the furrows or borders would run to the west or northwest. Two additional field ditches, C-2 and C-3 would be required.

The proposed layout of ditches provides for furrow and border strip lengths ranging from about 100 to 150 meters. Whether or not these lengths are the most desirable ones will have to be determined from research and experience. If they are too long for the infiltration rate of the soil, which is not known, the amount of water that will have to be applied to get the water through the furrows (or border strips) will be excessive and will contribute to a rise in the water table. When too short, or if the furrow streams are too large, considerable runoff may occur before an adequate amount of water infiltrates into the soil.

A discussion of a variable slope profile for border irrigation is given in the Appendix under "Theory of Surface Irrigation." In order to use this principle with the layout of ditches as proposed it would be necessary to lay out the borders or furrows between the proposed field ditches on variable contour grades. This may not be practical for the irrigation of annual crops.

Surface Irrigation by Border Strip and Furrow Methods

Surface irrigation by the furrow and border strip methods consists of running the water in furrows or between small ridges (borders) down the slope in controlled amounts until an adequate amount of water has entered the soil. In order to obtain adequate infiltration at the lower end of the field,

some water must usually be wasted. There may be excessive infiltration at the upper end and possibly less than desired at the lower end unless runoff occurs. With these methods water is not ponded on the surface as with basin irrigation.

With border irrigation, in order to minimize runoff, it is common practice to shut the water off at the head of the strip sometime before the water has reached the lower end, usually when it has covered about 80% of the strip. Experience will indicate when this should be done.

Preparation of Land for Surface Irrigation

Land Smoothing or Planing - Where the surface is originally quite smooth with only minor irregularities, as appears to be the case for most of the area to be irrigated, the only treatment necessary may be with some form of land plane or leveler. The Eversman Leveler, available at the station, should be quite satisfactory for this purpose. This machine will not work well if there are crop residues on the surface or if much material has only recently been incorporated by shallow discing. In order to make efficient use of this leveler, the blade should be set to maintain a full load without excessive soil spilling over the top. This setting will allow maximum cutting of high places and filling of low places. A good job of land smoothing greatly facilitates the application of water and increases the uniformity. Usually it is necessary to go over the area at least twice with a second pass in a direction approximately at right angles to the first pass. Sometimes two additional passes are made at approximately 45° from the first two. This smoothing will remove minor variations, and if there is a general slope of at least .2% or more, it should eliminate adverse slopes and ponding when water is applied.

Land Grading Procedure - When the original surface has appreciable variations and especially when the general slope is very low, say less than 0.2%, some land grading with a carryall type land scraper may be necessary before the land smoothing operation. When heavy equipment is used for grading, and unless there is a heavy stand of weeds or crop residues on the surface, prior cultivation of the land may not be necessary. If plowing is necessary to loosen

the top soil so that it can be readily picked up and transported with the scraper, this should be done some time before the grading in order that any crop residues or weeds may have time to decompose. Otherwise, such residues may interfere with the grading operations.

When grading is to be done, a topographic survey is first made and the field is staked out, usually in a grid pattern with stakes not more than 50 meters apart (closer if the surface is quite irrigular.) The ground surface elevation at each stake (usually above some arbitrary datum) is determined and recorded on the map. The desired elevation at each stake is then computed and the necessary cut or fill is marked on the stakes. The desired elevations are computed so as to provide a balance in cuts and fills. Although the computed surface is generally a plane, this is not necessary and any other surface configuration for which there are no adverse slopes could be used.

A sketch map is generally provided to show the equipment operator the areas requiring a cut and those requiring a fill, and the direction the earth should be moved to minimize costs.

Following this grading, the field is again cultivated (plowed or disced) and the land planing performed as described previously. It is essential that all previous crop residues are thoroughly incorporated into the soil.

Constructing Border Levees - The border method of irrigation uses small levees usually spaced 5 to 10 meters apart generally running more or less down the slope so that the land between the border is nearly level. The purpose of the border is to guide and control the flow so that all of the land can be irrigated, which is difficult to do without borders or furrows. This method is well illustrated in Circular 408 of the Agricultural Experiment Station, University of California, entitled "The Border Method of Irrigation" by James C. Marr.

For annual crops such as rice or sorghum, borders are most commonly made with a disc ridger. This type of implement has from one to three discs on each side which throw the earth into a ridge or border. They leave a furrow or depression on each side of the border that must be blocked at intervals

to prevent most of the flow in the strip from following along the borders instead of covering all of the area between them. A cross section of a typical border strip made with a disc ridger is shown in Figure 4.

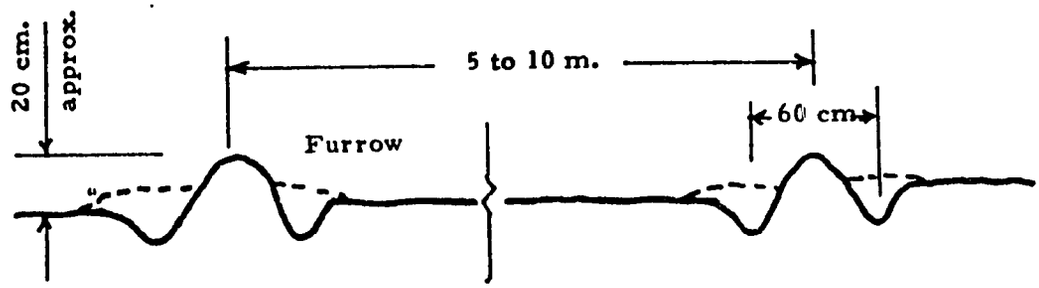

Figure 4. Typical Cross Section of Border Strip Made with Ditch Ridger (furrows blocked at intervals)

For crops such as alfalfa or grass hay crops, it is desirable to make the borders fairly broad but not very high so that mowing and other field operations can be carried on over the borders. A typical cross section of a broad border is shown in Figure 5. These borders are intended to last for several years.

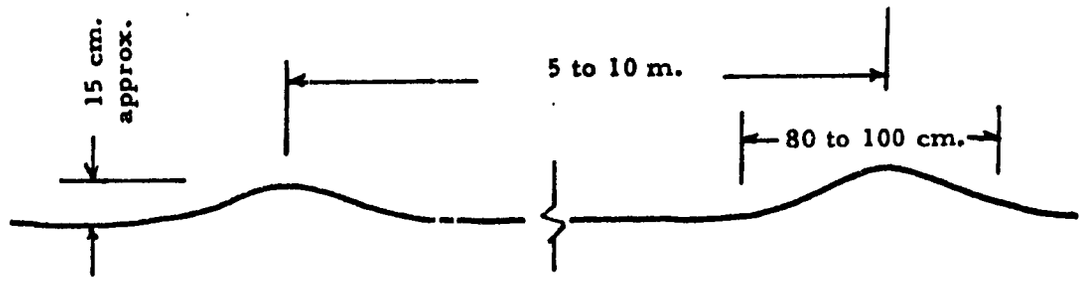

Figure 5. Ideal Cross Section of a Border Strip for Perennial Crops with Broad Borders

Furrows - Furrows are most often made with a tractor mounted tool bar with about four listers or furrow openers. The furrow spacing should fit the tractor wheel spacing so that the tractor can be used for cultivation and weed control after emergence of the crop. For corn planted before or at the beginning of the rainy season it is desirable to prepare beds with large furrows between them and plant on the beds. This provides much better drainage for the seedlings and eliminates the poor stands often experienced when the crop is planted on flat surfaces and heavy rains occur shortly after planting or during the seedling stage.

A wide range of equipment is available for making furrows, preparing beds for planting, and for cultivation between rows.

Figures 6 and 7 illustrate irrigation by means of border strips and furrows using siphon tubes to siphon the water over the ditch banks instead of cutting openings through them. This is a recommended practice.

Constructing Field Ditches - Field ditches can best be constructed with a conventional ditcher described in the section entitled equipment. Before making the ditch, especially if the soil is very hard, it may be necessary to plow to a depth of 20 cm. to loosen the soil.

It is common practice in some areas to make the field ditches after the crops have been planted. When constructing a ditch it is desirable to make several passes cutting a little deeper each time compacting the banks with the tractor with each pass. Ditchers are adjustable so they can be used to construct ditches of different dimensions. A crawler type tractor is preferable to a wheel unit for constructing ditches because the crawler tracks make a better ditch bank or berm.

Use of Canvas Dams and Siphon Tubes

It is suggested that canvas dams, or reinforced plastic dams, be used instead of permanent structures in the field ditches to raise and control the water level so that it can be diverted to the field through plastic siphon tubes. These portable dams are made from a piece of heavy canvas or nylon reinforced plastic about 1.5 x 2.0 meters in size. A loop is sewed along one side

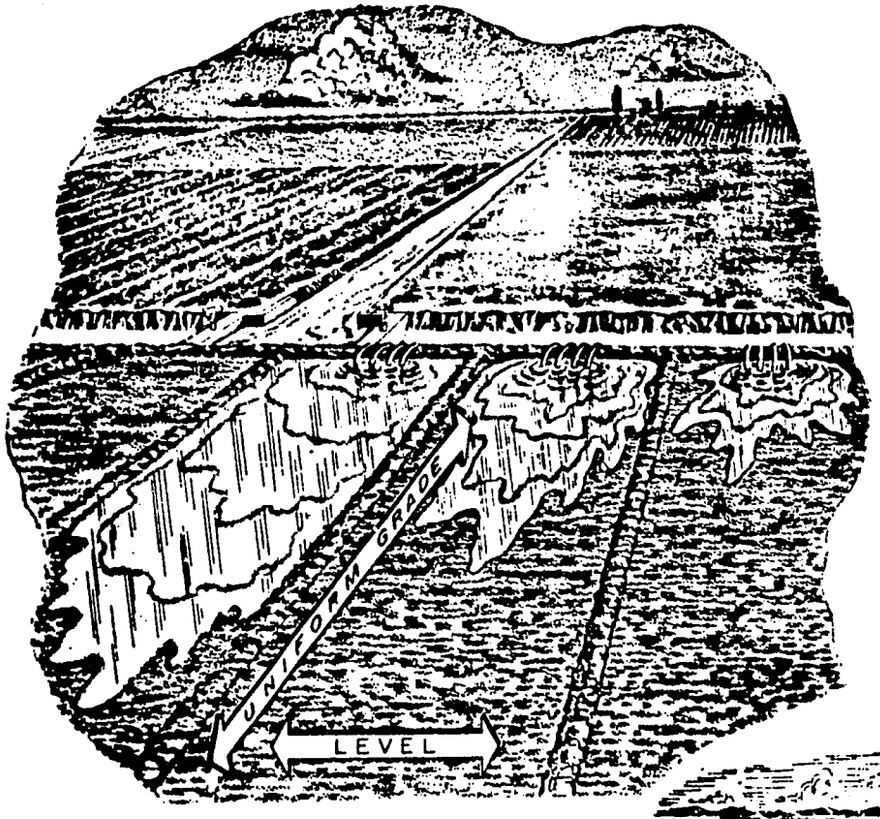

Figure 6 (left)
Flooding Border Strips
Using Siphon Tubes

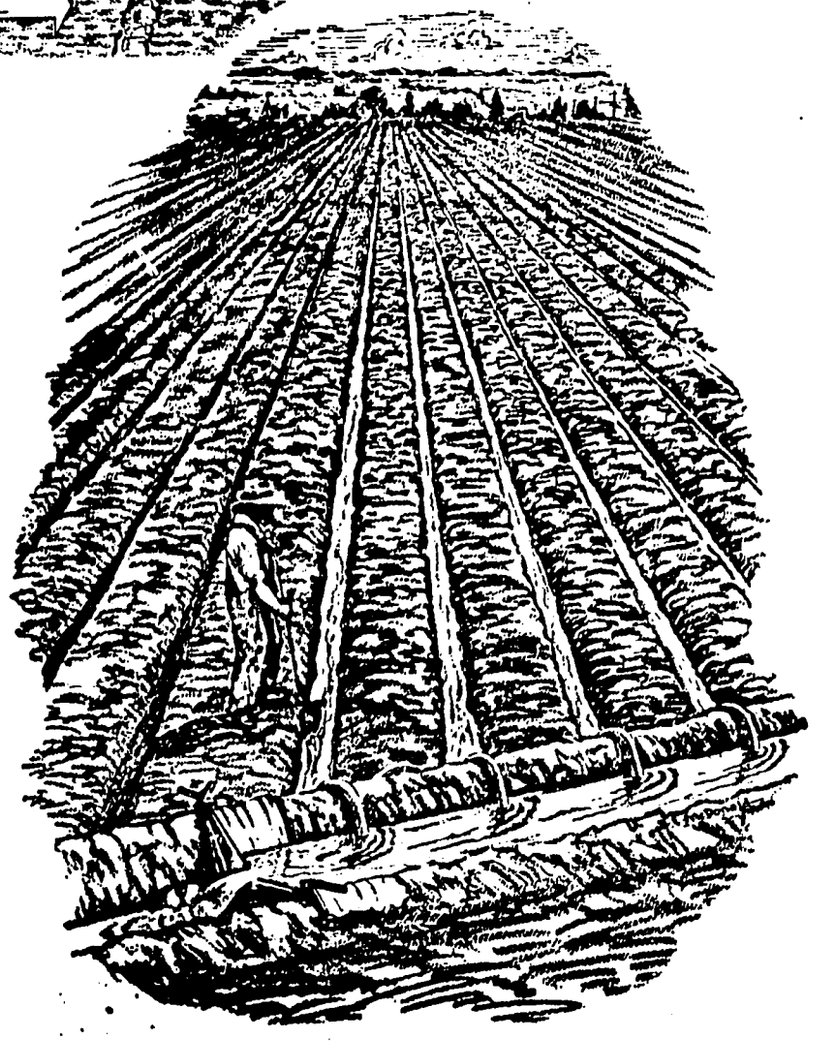

Figure 7 (right)
Furrow Irrigation
Using Siphon Tubes

Drawings reproduced from "Irrigation on Western Farms." Bureau of Reclamation and Soil Conservation Service, Agricultural Information Bulletin No. 199 51 p.

(the long dimension) so that a bamboo pole about 3.0 m. in length and 5 cm. in diameter can be inserted through it. A weir notch about 40 cm. in width and 20 cm. in depth can be provided in some of these dams so that part of the water in the ditch can be by-passed to the next section of ditch. A sketch of such a canvas dam is shown in Figure 8. Approximately ten such dams should be obtained.

Heavy plastic siphon tubes should be used for diverting the water from the field ditches to the furrows and the border strips. For furrow use, approximately 90 siphons 4 or 5 cm. diameter and 1.5 meters in length should suffice. For flooding border strips, about 50 siphons, 7.5 or 8 cm. in diameter and 1.5 in length should be obtained.

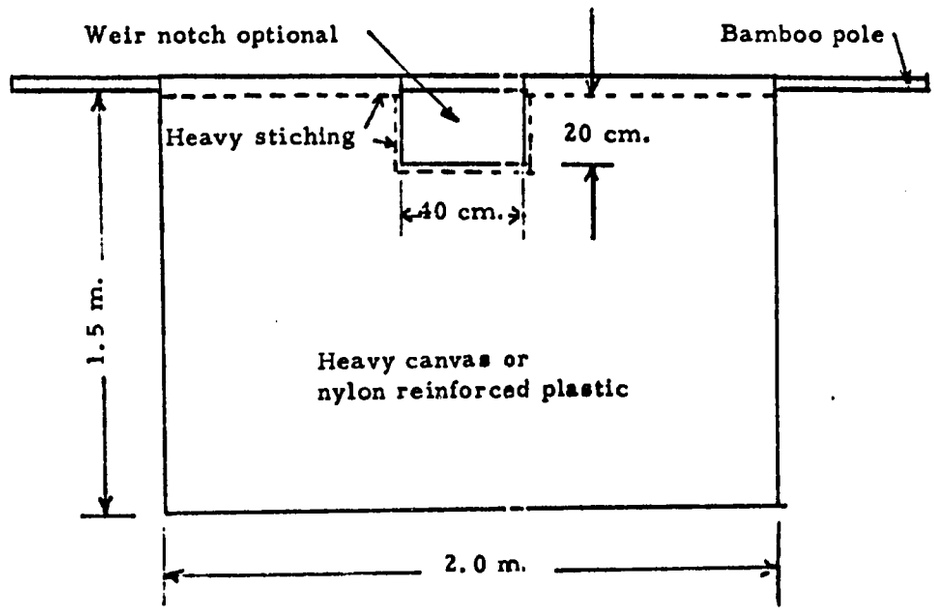

Figure 8. Sketch of Canvas Dam Showing Suggested Dimensions

Irrigation Structures

Control structures should be installed in the Head Ditches, A, B and C at the upper end of each of the Field Ditches, A-1, A-2 etc. Those in the head ditches should be of the overflow type with flash boards that regulate

the water level in these ditches. The headgate structures on each of the field ditches should have adjustable gates that will permit close regulation of the flow admitted to the field ditches.

Irrigation structures of this type are made of reinforced concrete, concrete or clay masonry units, wood or metal. For Costa Rican conditions it would appear that concrete masonry units might be the most desirable because of their extensive use in the country of all kinds of building purposes. This material would be especially suitable for the overflow structures in the head ditches. Structures of this type are shown in Appendix Figure A-1.

For the headgate structures at the upper end of the field ditches, a pipe section with cast iron screw gate is a very desirable type. The pipe section need be only one meter in length unless it is also to serve as a culvert for crossing the ditch in which case it should be 4 or 5 meters in length.

There are many other types of slide gates that could be used with either concrete or wooden headgate structures.

For the system as planned, with a roadway between the pasture fence and the head ditches there will have to be a culvert on the main canal where this roadway crosses it. This culvert could be of concrete pipe or corrugated steel pipe, and it should be at least 60 cm. diameter.

Headgate Structure

The headgate at the upper end of the main canal should be designed by and installed under the supervision of an experienced and competent civil engineer. Because of the hazard involved if this structure should fail during flood state on the Rio Cañas it is very important that special precautions be taken to insure the safety of this structure.

From a visual inspection of this site, it would appear that this structure could consist of a suitable length of concrete pipe with a reinforced concrete headwall and metal gate. To accomodate a flow of 200 liters per second under low flow conditions it appears that this pipe through the levee along the river bank should not be less than 80 cm. or 30 inches in diameter. A gate similar to Armco 104 (formerly Calco 104) gate a drawing of which is shown in the Appendix, Figure A-2 would appear to be a suitable gate for this structure.

Maintenance of System

An irrigation system will require continued maintenance in order to function properly. The main canal should be kept free from weeds to allow unrestricted flow of water. This can be accomplished with hand labor or chemical weed control. Proper selection of chemical and critical timing of application will be required for good control.

If silting becomes a problem the channels will have to be cleaned periodically to maintain the full capacity of the canal. Erosion in canals or ditches can be controlled with suitable structures. Weed and silt removal in field ditches can be accomplished with the tractor and ditcher. At the end of a cropping season and before plowing it may be desirable to plow in the field ditches. This practice allows for corrections in ditch alignment, weed control and rebuilding the berms when the new ditches are made.

When canvas dams are not in use they should be removed from the ditches, washed and hung up to dry. This practice extends the life of the dam considerably as otherwise they rot in a short time when left in the ditch.

Siphon tubes are durable, however they can be easily damaged if run over by equipment. When not in use they should be collected and stored in the shade.

DRAINAGE

Surface Drainage

The surface drainage from the field will be taken care of by the two shallow surface drains indicated as 1 and 2 on the map, Figure 2. These both lead to the southwest corner of the experimental station and into the old channel of the Rio Higueron which drains into the Rio Lojas approximately 4 kilometers west of the corner of the property. The Rio Lojas flows into the Rio Bebeduro approximately 6 kilometers west of the south part of the irrigated area, which in turn flows into Rio Tempisque.

It has been reported that during the flood season on these rivers, water backs up into the irrigated area. To avoid such flooding it may be necessary to provide some flood control levees and additional drainage. This will require a detailed study not possible during this assignment.

Good surface drainage and flood control are the first major requirements of an irrigated area that is to be planted to most agricultural crops with the exception of rice.

Subsoil Drainage

Whether or not a subsoil drainage system will have to be installed to properly control the water table after irrigation is practiced will depend upon the crops grown, the grading and land smoothing that is accomplished and the amount of water applied. Care should be exercised to apply only the amount of water required by the crops and not excessive amounts. A relatively high irrigation efficiency of 70% or more might be obtained with proper irrigation system design, land preparation and management of the water.

Ground Water Observation Wells

Time did not permit a design of a flood control or subsurface drainage system. In order to obtain data regarding the depth to the water table both during the rainy season and when the area is irrigated, a network of small permanent ground water observation wells should be installed. This network might consist of wells spaced about 200 meters apart along the field ditches as shown in Figure 3.

An excellent type of ground water observation well consists of a rigid PVC plastic tube about 1 inch inside diameter. This material comes in 6 meter lengths that can be cut into three 2 meter sections. The lower one meter of each tube should be perforated with small cuts made with a hack saw spaced about 10 cm. apart or with an electric drill using 1/16" or 3/32" bits. It takes only a few minutes to cut and perforate each length.

These tubes should be installed in an auger hole about 10 cm. in diameter and 1.9 meters deep. Approximately 10 cm. of fine gravel or coarse sand is placed in the bottom of the hole and the tube set on this gravel. The space around the tube should be filled with sand or gravel to within about 30 cm. of the surface. The upper 30 cm. of the hole is filled with soil and tamped to stabilize the tube.

POZO DE OBSERVACION No 10.

FECHA	LECTURA	COTA	PROFUNDIDAD	OBSERVACIONES	
16-2-73	1.29	7.40	1.05	ACEQUIA	SECA
23-2-73	1.34	7.35	1.10	"	"
2-3-73	1.37	7.32	1.13	"	"
10-3-73	1.40	7.29	1.16	"	"
16-3-73	1.20	7.49	0.96	AGUA EN ACEQUIA	
23-3-73	1.02	7.67	0.78	CAMPO REGADO	

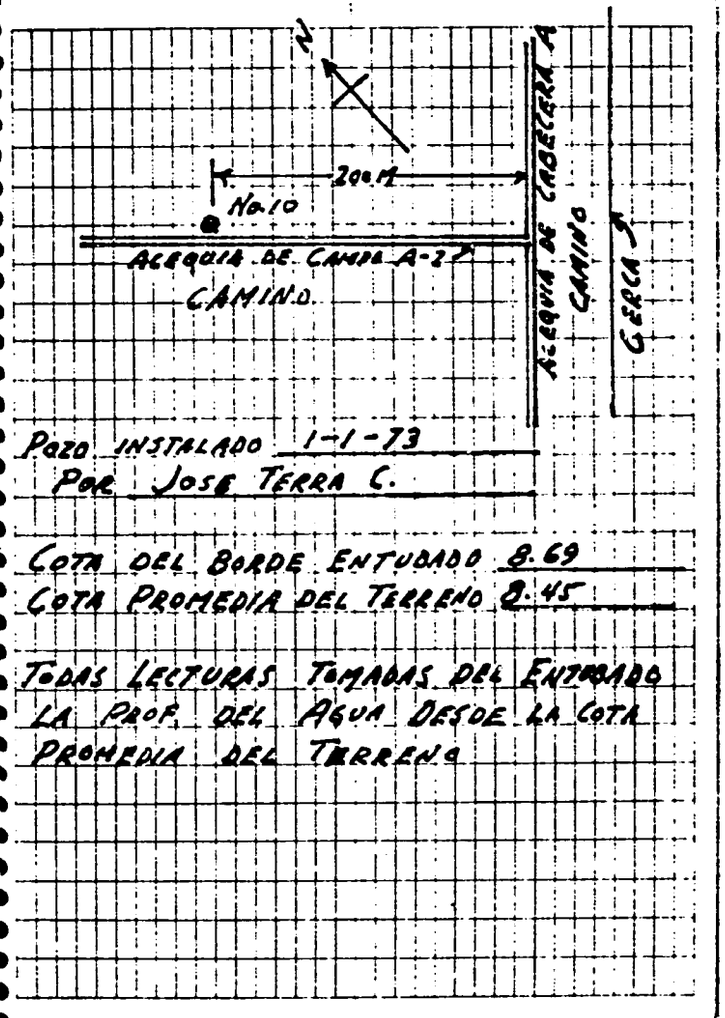

POZO INSTALADO 1-1-73
POR JOSE TERRA C.

COTA DEL BORDE ENTUBADO 8.69
COTA PROMEDIA DEL TERRENO 8.45

TODAS LECTURAS TOMADAS DEL ENTUBADO
LA PROF. DEL AGUA DESDE LA COTA
PROMEDIA DEL TERRENO

Figure 9. Suggested form for Field Notebook for Drainage Observation Wells

Readings should be made periodically during the rainy and irrigation seasons. All readings should be made from the top of the tube and the notes should indicate the elevation of the top of the tube above the average soil surface in the vicinity of the tube and not necessarily the soil at the tube. The tubes should project about 20 cm. above the soil for convenience. Experience will indicate how frequently such readings should be made in order to obtain satisfactory records of ground water fluctuations. A suggested form for a field note book for ground water observations is shown in Figure 9.

Ground Water Representation

The data obtained from the observation well readings should be plotted on maps to show visually the water table conditions both during the rainy season and during the irrigation season. There are two kinds of maps that are useful which might be called a ground water map and a depth to water table map. For the size of the area to be covered, maps with a scale of about 1:2000 is suggested.

Ground Water Map

This is a map that shows the configuation of the ground water surface, or water table, by means of contour lines. It is very similar to a topographic map, but instead of showing the soil surface by means of contours it shows the water table surface. It is useful because it often reveals the principal sources of the ground water such as from seepage from canals or ditches, or from excessive applications of water by irrigation or from rainfall. This map also shows the general direction of the groundwater flow which is normal to the contour lines. For this ground water map, a contour interval of 20 cm. is suggested.

This kind of map could be plotted for each set of observation well readings so that each map would represent the ground water conditions for a definite date. Because of local effects of irrigation in certain parts of the field, such maps usually show considerable variations from week to week. A more practical procedure is to take the highest water table elevations for each ob-

servation well for a given period of time, as for example during the latter part of the rainy season, and plot one map that represents the maximum water table elevations for this period. Another procedure would be to average the readings for a given period and plot a map that would represent average conditions.

Depth to Water Table Map

This is probably the most useful representation of the water table data as it shows the depth of the water table below the surface of the ground. It will, therefore, show at a glance the areas in need of subsoil drainage. Again these maps could be plotted to show the highest, the average, or the lowest positions of the water table for certain periods. Again, contour intervals of 20 cm. would be appropriate.

The areas between the contour lines on these maps are often colored or shaded. A color code using red to indicate areas with a water table within 40 cm., pink for 40 to 60 to 80 cm., brown for 80 to 100 cm., blue for 100-140 cm. and green for more than 140 cm. is suggested. When such maps are to be reproduced in reports requiring many copies, various shadings instead of colors might be more appropriate.

Ground Water Hydrograph

Another visual representation of ground water conditions is to plot the elevation of the water table (or depth to the water table) for specific observation wells against time to an appropriate scale. Such hydrographs would show for example, the rate of rise of the water table at the beginning of the rainy season and the subsequent lowering at the end of the rainy season. They would also show the effect of an irrigation by a rapid rise, and the more gradual lowering during the period between irrigations. Such hydrographs might be plotted for only a few key observation wells.

Planning a Drainage System

From the ground water data and the visual representations, together with some auger hole determinations of the hydraulic conductivity of the subsoil, a layout of a drainage system could be made. Generally, however, where such financing can be arranged, it is recommended that the first step be the

excavation of, or in this instance the deepening of the present drains so that they would serve as outlets for a subsequent network of tile drains if needed. After these main drains are deepended, or additional ones excavated, studies should be made to determine their effectiveness. This will usually necessitate the installation of additional observation wells on lines normal to these main drains. When these data are plotted they will show the drawdown toward the drains, and if it is possible to measure the rate of flow into the drains, or general rate of lowering of the water table near these drains, it is then possible to compute the effective hydraulic conductivity as a check against other methods. Proper drain spacing depends on both the amount of water that must be removed and the hydraulic conductivity of the soil. There is no precise method of computing this spacing, although formulas commonly used are helpful along with good judgment based on experience.

Equipment

The experimental station is well supplied with most of the equipment necessary to operate an irrigated farm. Tractors, plows, discs, planting and harvesting machinery are for the most part new and in good repair.

In the event it is found necessary to move appreciable quantities of soil considerable distances in the land grading operation it would be desirable to borrow the Eversman Carryall located at the University Research Farm at Alajuela. This unit is capable of hauling up to about 2 cubic meters of soil and is an excellent piece of equipment for land grading.

It would be desirable to install a water measuring device near the river diversion and in the main canal near the head ditches. Because of the low available head loss, Parshall flumes or similar devices would be more appropriate than ordinary weirs. These flumes would be of considerable value in measuring stream flow and determining losses in the canal. They would not be essential for the first year of operation.

At the present time it appears unlikely that a need exists for soil moisture measuring devices such as gypsum blocks or tensiometers. When detailed irrigation studies are initiated such equipment would be desirable and should be acquired.

The following equipment will need to be purchased to construct and operate the irrigation system.

1. Eversman Ditcher Model D6 equipped with hydraulic ram, remote control kit #901010, 15 inch tires and tubes. Available from Eversman Company, 5th Street and Curtis, Denver, Colrado 80204.
2. John Deere 8 foot model 23B, 4 x 7 inch tool bar with category 2, 3 point hookup, equipped with gauge wheels, four spring trip standards, four general purpose lister bottoms and two 24 inch border disk plows. Available from John Deere Company.
3. Approximately 90 plastic recurve siphons 1 1/2 meters in length and 4 cm. or 5 cm. in diameter will be needed for the furrow irrigation. The border check fields will require 50 siphons about 7.5 cm. in diameter.
4. Ten canvas dams 1 x 1 1/2 meters will be needed for backing up the water so the siphons can be operated.
5. Fourteen 6 meter lengths of heavy wall PVC plastic tubing should be secured for making the ground water observation wells. This will provide 42 observations wells for use in the irrigated area.

PUBLICATIONS ON IRRIGATION

There are a number of very useful publications on irrigation that can be secured from the U.S. Department of Agriculture, Washington, D.C. or from the various Agricultural Extension Services of the Western States. The U.S. Bureau of Reclamation and the Department of Interior, Washington, D.C. also has publications on irrigation. Many of these publications are distributed free, but a small charge is made for some of them.

It is suggested that a request for a "List of Available Pulibcations relating to Irrigation" be made to the following Agricultural Extension Services at

University of Arizona, Tucson, Arizona

Colorado State University, Fort Collins, Colorado

University of Wyoming, Laramie, Wyoming

Montana State University, Boseman, Montana

University of Idaho, Moscow, Idaho

Utah State University, Logan, Utah

New Mexico State University, State College, New Mexico

University of California. Berkeley, California

Publications Sent to Costa Rica

The following publications are being sent to USAID/Costa Rica for use by M.A.G. Additional publications will be sent as soon as copies can be obtained.

1. The Border Method of Irrigation by James C. Marr. Circular 408, California Agricultural Experiment Station and Extension Service, University of California, 23 pages.

2. Irrigation, SCS National Engineering Handbook, Section 15, Chapter 3. Soil Conservation Service, U.S. Department of Agriculture, 92 pages.

3. Irrigation by Sprinkling by J. E. Christiansen. Bulletin 670. College of Agriculture, Agricultural Experiment Station, University of California. Reprinted November 1972 at Utah State University, Logan, Utah, 124 pages.

4. Measuring Irrigation Water by V. H. Scott and C. E. Houston, Circular 473, Agricultural Experiment Station and Extension Service, University of California, 42 pages.

5. Measurement of Irrigation Water by Eldon M. Stock. Bulletin No. 5, Published Jointly by Utah State Engineering Experiment Station and Utah Cooperative Extension Service, 80 pages.

6. Measuring Water in Irrigation Channels with Parshall Flumes and Small Weirs. Circular No. 843, Soil Conservation Service, U.S. Department of Agriculture, 62 pages.

Other References on Irrigation

1. Irrigation of Agricultural Lands, edited by Robert M. Hagan et al, Agronomy Series No. 11, published by American Society of Agronomy, Madison, Wisconsin, 1967, 1180 pages.

2. Irrigation Principles and Practices by Orson W. Israelsen and V. E. Hansen, published by John Wiley and Sons, Inc., New York, 445 pages.

3. Sprinkler Irrigation, edited by Textbook Re-editing Committee, published by Sprinkler Irrigation Association, Washington, D.C., 444 pages.

4. Tecnica del Riego Fertilidad y Explotacion de los Suelos by D. W. Thorne and H. B. Peterson, published by Compania Editorial Continental, S.A. Calzada de Tlalpan Num. 4620, Mexico 22, D.F., 496 pages.

APPENDIX A

TABLE A-1. Chemical and Physical Characteristics of Representative Soils at Taboga Experimental Station*

Profile for Pit #5

Profile	A_p	A_{12}	B_2	C_1	IIBb	$IIIC_1$
Depth, cm.	0-10	10-45	45-65	65-95	95-110	110-150
pH - water	6.1	6.6	6.7	6.9	7.0	7.2
Texture:						
Sand, %	44.8	32.8	48.8	57.8	33.8	92.2
Silt, %	17.2	59.2	48.2	40.6	59.2	4.8
Clay, %	38.0	8.0	3.0	1.6	7.0	3.0
Composition, ppm.						
Calcium	3600	5000	5300	5000	4700	
Magnesum	440	448	480	488	524	
Potassium	425	300	250	185	135	
Aluminum	9	4	4	4	4	
Phosphorous	100+	22	25	69	75	
Moisture Characteristics						
1/3 Atmos., %	30.9	35.0	31.4	26.6	37.7	
15 Atmos., %	15.8	22.0	18.4	15.4	21.1	
Available Mois.	15.1	13.0	13.0	11.2	16.8	
Apparent Density	1.45	1.52	1.40	1.32	1.32	
Read Density	2.35	2.32	2.36	2.38	2.39	
Porosity, %	38	35	41	45	45	

*From data furnished by Ministry of Agriculture

TABLE A-2. TABLA 1. PRECIPITACION MEDIA EN mm.

Estación	No.	Latitud	Longitud	Elevac.	Ene	Feb	Mar	Abr	May	Jun	Jul	Ago	Set	Oct	Nov	Dic	Total
Arenal	069-514	10°28'	84°51'	520	138	62	62	70	154	298	345	280	323	317	255	231	2535
Pueblo Nuevo	069-522	10°27'	84°46'	516	346	240	185	207	365	396	389	521	415	389	274	434	4161
Cano Negro	069-525	10°24'	84°50'	1027	547	340	244	244	306	375	399	577	392	484	569	591	5068
Liberia	074-001	10°37'	85°26'	144	2	1	2	16	197	271	159	140	356	339	104	13	1600
Hacienda Tempisque	074-011	10°30'	85°34'	22	1	6	4	56	212	329	213	197	367	400	87	11	1883
Tiliran	076-002	10°28'	84°59'	562	65	27	28	41	184	344	350	250	364	381	182	131	2347
La Pacifica (Canas)	076-005	10°25'	85°07'	95	4	27	11	44	92	327	123	163	322	307	100	24	1544
Tierras Morenas	076-006	10°34'	85°02'	650	123	68	39	48	180	351	264	290	323	447	232	326	2688
Las Juntas (Abangares)	078-001	10°17'	84°58'	140	3	2	23	101	223	336	265	361	440	404	186	31	2375
Monte Verde	078-002	10°19'	84°49'	1380	66	45	27	46	221	363	213	261	372	460	198	155	2427
Puntarenas	078-003	09°58'	84°50'	3	2	11	8	46	157	223	248	212	293	235	100	25	1610
Media para el Area Irrigada *					3	13	7	35	149	274	177	172	324	310	101	21	1588
Media para la Cuenca del Arenal **					320	208	152	166	297	378	334	453	393	444	347	393	3895

* Promedio de Liberia, La Pacífica y Puntarenas

** Promedio para Monte Verde, Pueblo Nuevo y Caño Negro

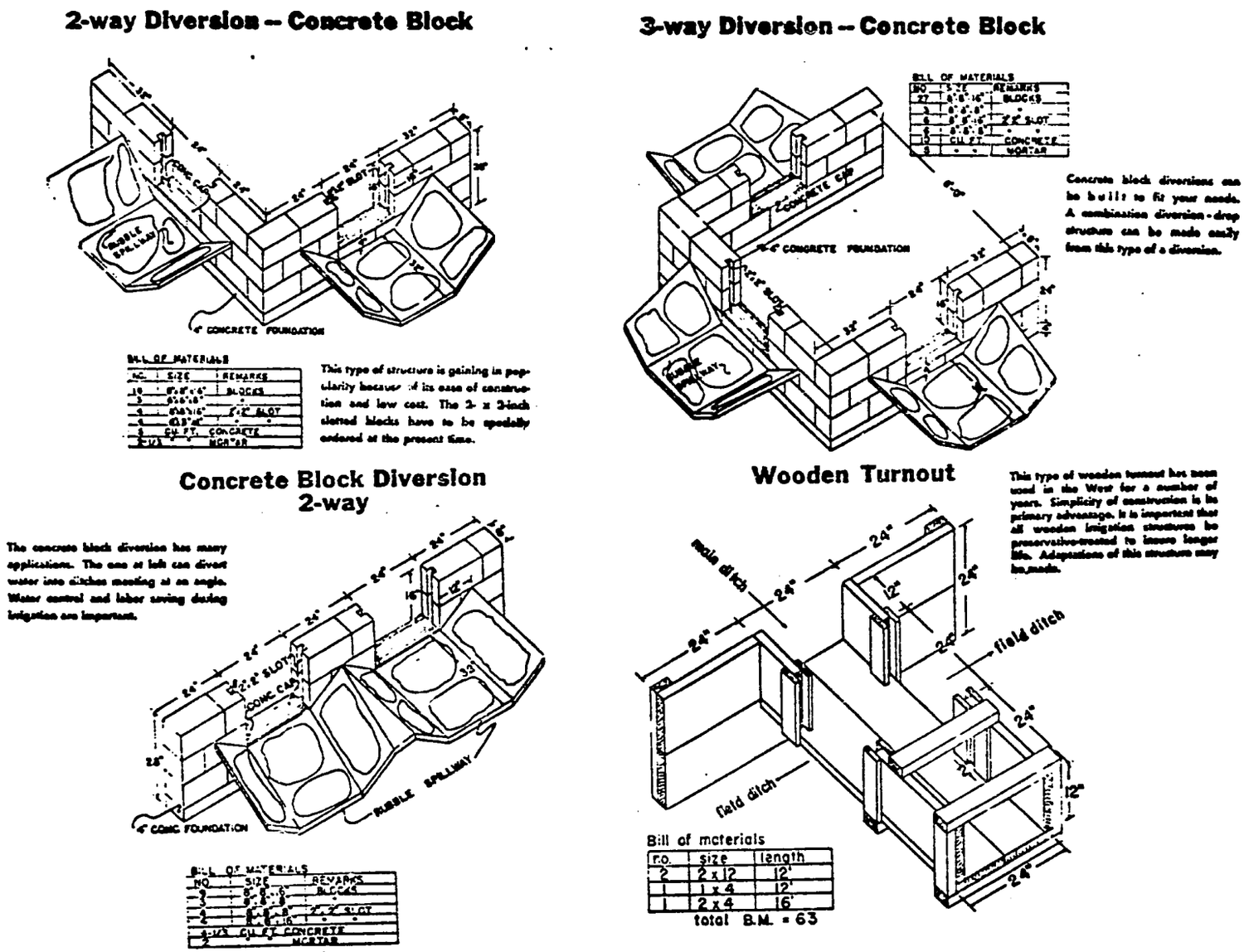

Figure A-1. Types of Concrete Block and Wooden Structures that Could be Used in Head Ditches. Reproduced from Circular 122, "Low Cost Irrigation Structures" Agricultural Extension Service, University of Wyoming, Laramie, Wyoming.

Fig. No. 116. CALCO SLIDE HEADGATE MODEL No. 104

This gate is similar in pattern and construction to the Calco Headgate Model No. 101 except that it is so constructed that it can be fastened to a concrete wall.

It is also made in the non-rising stem pattern.

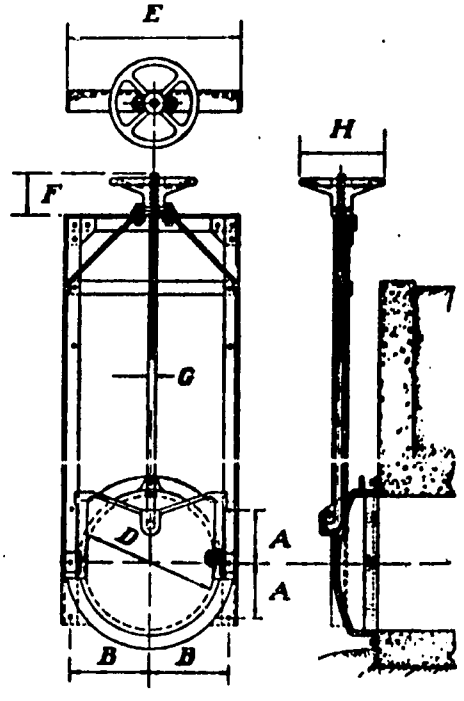

This model is extensively used in water treatment and sewage disposal works.

GATE OPENING		Minimum Frame Height						
Diam. Inches	Area Sq. Ft.	Feet	A	B	E	F	G	H
8	.349	2	3	5	11¼	2¾	⅞	10
10	.545	2	3½	6	13¼	"	"	"
12	.785	2	4	7	15¼	"	"	"
14	1.069	3	4¾	8	17¼	"	"	"
16	1.396	3	5½	9	19¼	"	"	"
18	1.767	3	6	10½	22¾	3½	1	12
20	2.182	4	7	11½	24¾	"	"	"
24	3.142	4	8	13½	28¾	"	"	"
30	4.909	5	10	16⅞	35¾	4	1⅛	15
36	7.069	6	12	19⅝	41¾	"	"	"

Figure A-2. **A Type of Slide Headgate Suitable for the Main Canal. Reproduced from "Handbook of Water Control." Published by ARMCO Steel Corp.**

APPENDIX B

Variable Gradient - Concave Longitudinal Profile

It has been generally considered that the most desirable surface topography for surface irrigation is a plane with a very low cross slope and a longitudinal slope within the range of about 0.1% to 0.5%

It can be shown, however, that a plane surface with a uniform slope in the direction of the run is not the ideal profile for the most uniform application of the water. A more ideal profile would be concave one with near zero slope at the lower end. A low border across the lower end could pond a small amount of water so that the infiltration there would approximate that farther up the slope.

To obtain a high irrigation efficiency with a minimum of deep percolation below the root zone and a minimum of runoff requires the correct relationship between the flow rate entering the furrow or border strip, the area of the strip or length of furrow, and the infiltration rate for the soil.

Consider first a border strip of length L, and width, b. The area would then be

$$A = b \ L \tag{1}$$

If a given depth of water, d, is to be applied to this strip, the required volume, V_o would then be

$$V_o = d \ A = d \ b \ L \tag{2}$$

If a flow rate, Q, entered this border strip for time, T, the volume applied would be

$$V_o = Q \ T \tag{3}$$

If this time, T, is that required to obtain the desired application and penetration of the water into the soil, then the required flow rate would be

$$Q = V_o/T$$

$$= d \ b \ L/T \tag{4}$$

For a high irrigation efficiency with minimum waste it is essential that the relationship between the variables be approximately as given by equation 4. Therefore, it is necessary to know the approximate time, T, required for the desired depth of water, d, to enter the soil, assuming that the soil is uniform and has the same infiltration characteristics over the entire strip.

As water infiltrates into a soil, the rate of infiltration, I, decreases and can generally be expressed approximately by the equation

$$I = K\ t^{n} \tag{5}$$

where K is an infiltration constant, t is the time the water is in contact with the soil and n is an exponent with a value that is generally in the range of -.3 to -.7 and often taken as -.5. It is therefore obvious that K is equal to I when the time, t, is unity regardless of the value of n. Assuming that n = -.5, and the rate of infiltration, I, at time t = 1.0 was K, then the rate, I, for time, t = 2, would be

$$I = K\ 2^{-.5}$$
$$= K/\sqrt{2}$$

and for time t = 4

$$I = K/\sqrt{4} = K/2$$

By integrating equation 5 between the time limits, t = 0 and t = T, it can be shown that the total depth that infiltrates, D, as a function of time can be expressed by the equation

$$D = \int_0^T I\ dt \tag{6}$$
$$= \int_0^T K\ t^{n}\ dt$$
$$= K\ T^{(n+1)}/(n+1) \tag{7}$$

again, assuming n = -.5, then n+1 = +.5, and

$$D = K\ T^{.5}/.5$$
$$= 2\ K\ \sqrt{T}$$

This equation (7) shows that the actual amount of water that has entered the soil when $t = 1$, is just twice the actual rate of infiltration, K, at time, $t = 1$. For $t = 4$, the total amount that has infiltrated would be

$$D = 2\ K\sqrt{4} = 4\ K$$

For the purpose of this discussion it is not necessary to know the values of either K or n, but only to know approximately the time, T, required for the desired amount of water, D, to enter the soil.

If the soil profile is a uniform slope, and the correct flow, Q, is applied for the correct time, T, the depth of application, D, would be correct at the upper end of the border strip, but it would be progressively less than, D, as one progressed down the strip since the rate of advance of the water over the strip is always less than the recession rate, and the time, t, that the water is on the soil is progressively less down the strip. The average amount applied would be correct, but an appreciable amount would run off the surface at the lower end, and the average depth, D_a, entering the soil would be somewhat less than the desired depth, D.

However, if the longitudinal profile was concave, steeper at the upper end and with a zero slope at the lower end, and if a small dike at the lower end prevented any runoff, one could reason that the depth applied at the upper end, D, would be correct, that the average depth, D_a, applied would be correct, approximately. If this were true, the depth that infiltrated at the lower end, with no runoff, would also be the approximately the correct amount, D. Thus, the amount infiltrating along the strip should be approximately uniform, and the runoff, if any should be minimal.

The question thus arises, what is the ideal profile? A concave profile can be expressed by the equation

$$h = H\ (x/L)^p \qquad (8)$$

where

h is the elevation of any point along the profile above the elevation at the lower end, and x is the distance of that point from the lower end. H is the

height of the upper end of the field above the elevation at the lower end and L is the length. The average slope, S, would be

$$S = H/L \tag{9}$$

The ideal value of the exponent p is not known but it might be assumed to be $p = 2$.

For this profile with $p = 2$

$$h = H \ (x/L)^2 \tag{10}$$

The actual slope, s, at any point along the profile would be

$$s = dh/dx$$

Differentiating equation (8) one obtains

$$dh = p \ (H/L) \ (x/L)^{(p-1)} \ dx \tag{11}$$

or

$$s = p \ (H/L) \ (x/L)^{(p-1)} \tag{12}$$

For $p = 2$ this equation becomes

$$s = 2 \ (H/L) \ (x/L) \tag{13}$$

For $p = 1.5$, for example

$$s = 1.5 \ (H/L) \ (x/L)^{.5} \tag{14}$$

Values of the dimensionless parameters, x/L, h/H and s for values of $p = 1.5$ and 2 are given in Table B-1. These profiles are also shown in Figure B-1.

TABLE B-1. Dimensionless Parameters for Irrigation Profiles

p	x/L	0	.1	.2	.3	.4	.5	.6	.7	.8	.9	1.0
1.5	h/H	0	.03	.09	.16	.25	.35	.46	.59	.72	.86	1.0
1.5	s	0	.47	.68	.82	.94	1.06	1.16	1.25	1.34	1.42	1.5
2.0	h/H	0	.01	.04	.09	.16	.25	.36	.49	.64	.81	1.0
2.0	s	0	.20	.40	.60	.80	1.00	1.20	1.40	1.60	1.80	2.0

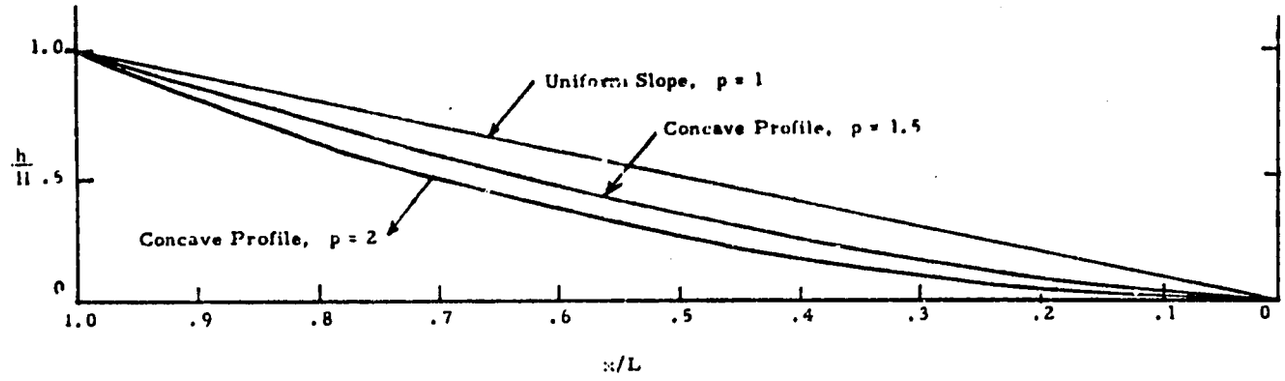

Figure B-1. Longitudinal Profiles for Border Strips and Furrows

Practical Application of Variable Slope Profiles

As mentioned previously, nearly all discussions of land grading and surface methods of irrigation either recommend grading the surface to a plane surface with a uniform slope in both directions. If such a plane surface is not actually recommended it is generally assumed to be the ideal. The suggestions made above for a concave profile may not appear practical, except where the original surface may have been somewhat concave, otherwise it would appear that excessive grading and soil moving would be required. This is not necessarily true because both borders and furrows can be laid out to follow contour profiles of any desired slope. For the irrigation of rice, sorghum or grain crops, there is no particular reason why borders (small levees) should be straights. They could just as well be curved to achieve any desired longitudinal profile that would provide a more efficient irrigation, and more uniform application of water with a minimum of surface runoff. This would require the staking out of the curved lines for the borders to follow. This type of staking is required and customarily done when rice is irrigated by contour basins, except in this case the borders are on level contours, i.e. S = 0.