UNITED STATES DEPARTMENT OF THE INTERIOR
Fish and Wildlife Service
Bureau of Sport Fisheries and Wildlife

A MULTIPLE-USE WILDLIFE TRANSMITTER

by

A. L. Kolz, G. W. Corner,
and R. E. Johnson

Denver Wildlife Research Center
Division of Wildlife Research

Special Scientific Report – Wildlife No. 163
Denver, Colorado 1973

For sale by the Superintendent of Documents, U.S. Government Printing Office, Washington, D.C. [illegible]

CONTENTS

	Page
Abstract	1
Introduction	1
Circuit description	2
RF transmitter circuit	2
Logic switching circuits	4
Pulse generator	4
Temperature monitoring	5
Activity monitoring	5
Mortality monitoring	6
Delayed turn-on with mortality and location monitoring	7
Printed circuit board	7
Discussion	10
Literature cited	11

A MULTIPLE-USE WILDLIFE TRANSMITTER

Abstract:

A versatile wildlife monitor has been developed by combining a 164-megahertz radio-frequency transmitter with two digital integrated circuits. The design provides a basic pulsing transmitter for normal location monitoring, but simple circuit changes provide additional capabilities: monitoring of the animal's temperature, movements, or death (through either cessation of movement or a drop in body temperature), and delayed turn-on. A fully assembled circuit weighs about 11 g; adding batteries, potting, antenna, and an attachment device results in a package weighing 50-350 g, depending on operating time.

Designs are available for a number of wildlife telemetry transmitters that serve as locator beacons by sending either continuous or pulsed radio-frequency (rf) signals. A few of these transmitters send modified signals that telemeter such additional information as the instrumented animal's body temperature or activity patterns, but none to our knowledge measure more than one of these additional parameters or can be readily converted for other types of operation.

The commercial availability of low-voltage, integrated circuits has recently made it possible to design a versatile wildlife transmitter. By the proper choice of components and appropriate shorting wires on a printed circuit board, the multiple-use transmitter described here can telemeter location, temperature, activity, or mortality data, as well as some combinations of these. In its most complex configuration, the assembled transmitter circuit board measures 2.5 x 5.1 x 0.8 cm and weighs about 11 g. Adding batteries, potting, antenna, and an attachment device normally results in packages ranging from 50 g and 35 cm^3, for a unit with a transmitting life of about 90 days, to 350 g and 150 cm^3, for a unit designed to operate for 2 years on a coyote (Canis latrans).

This research was conducted in part with funds provided to the U.S. Bureau of Sport Fisheries and Wildlife by the U.S. Agency for International Development under the project Control of Vertebrate Pests: Rats, Bats, and Noxious Birds, PASA RA(ID) 1-67.

CIRCUIT DESCRIPTION

It is convenient to consider the circuitry of the multiple-use transmitter in two functional blocks: the rf transmitter circuit and the logic switching circuits (fig. 1).

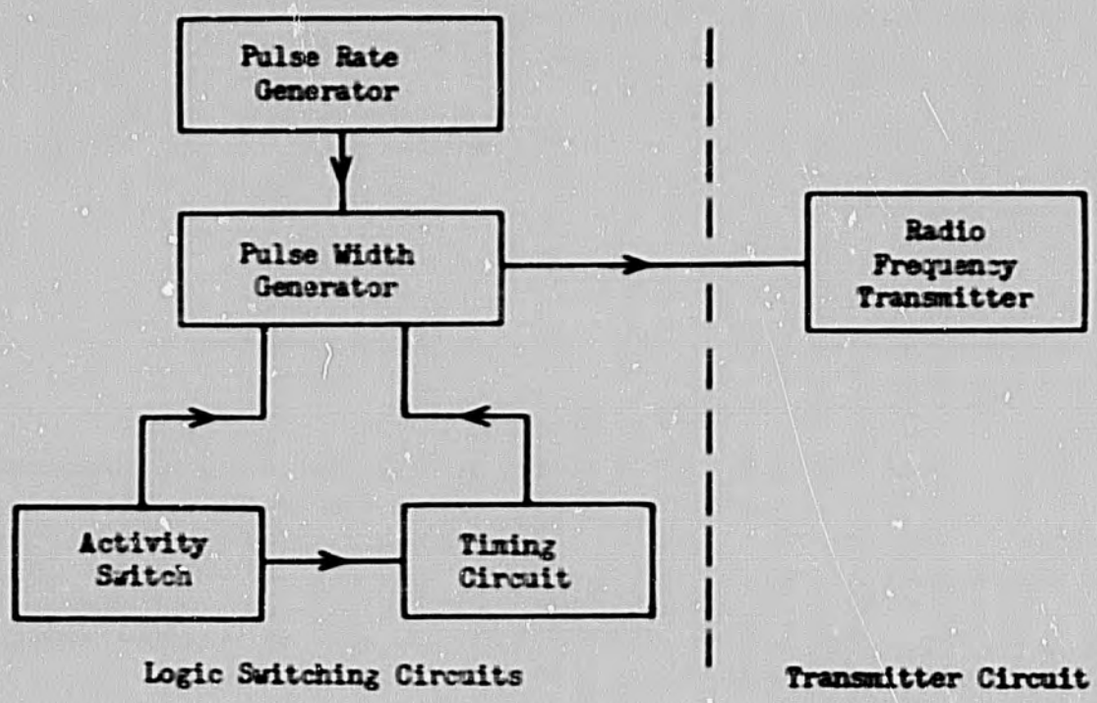

Figure 1 - Functional blocks in the multiple-use transmitter.

RF transmitter circuit

The rf transmitter circuit (fig. 2) is typical of circuits used for wildlife telemetry equipment, with the following exceptions. The transmitter is a crystal-controlled Colpitts oscillator driving a frequency-doubling second stage. We use a miniature quartz crystal (HX-24 holder) with a fundamental frequency near 27 MHz (see table 1 for typical component values, estimated prices, and the sources for some of the special parts). The oscillator stage generates the third overtone, which is frequency-doubled in the second stage to reach our assigned frequencies

near 160 MHz. Both stages of the rf circuits have bypassed resistors in the emitter that control current drain according to the radiated output power and transmitter life required. The high-frequency diode (D1) coupling to the second rf stage unblocks capacitor CC and allows more base drive into the second stage. All three coils are wound on a common axis; reversing the polarity shown (dot notation in fig. 2) can cause feedback and spurious frequencies. The antenna loading coil, LO, is separated about 1/16 inch from the other two coils so that it can be tuned independently with a ferrite core. The antenna we commonly use is a 10- to 12-inch vertical wire.

The rf transmitter is turned on by the logic switching circuits applying battery voltage to the base of the oscillator transistor (P1). Depending on the parameters being monitored, the emitted signal can be continuous or pulsed, and the pulse rate and width can be fixed or variable.

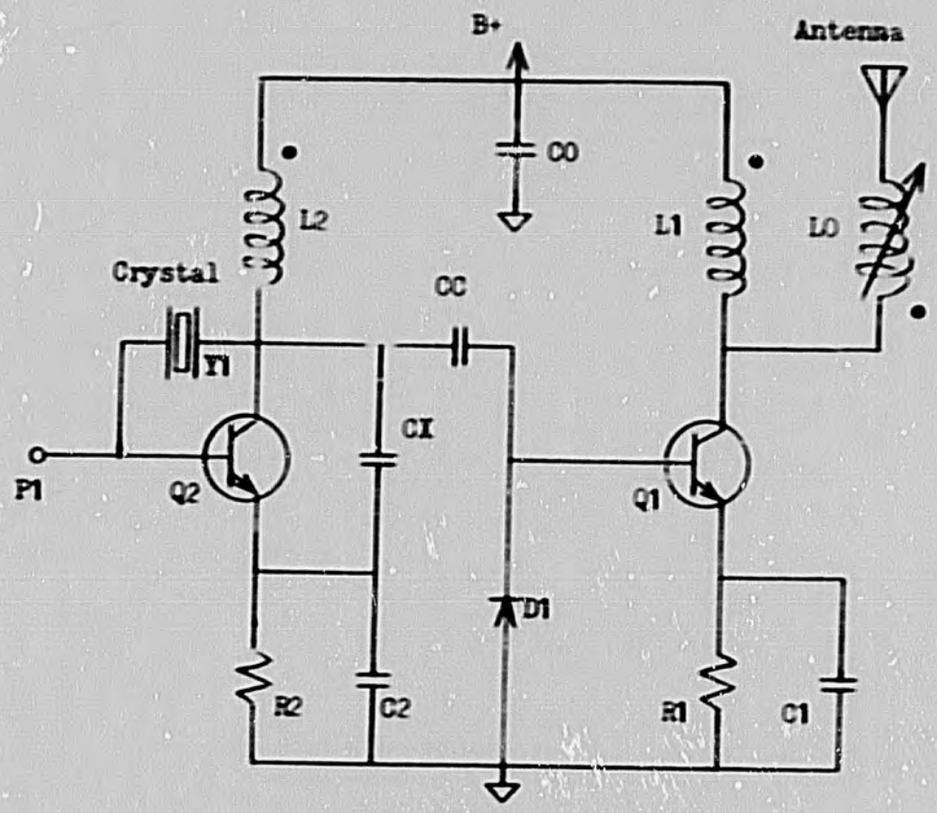

Figure 2 - Radio-frequency transmitter.

Logic switching circuits

The logic switching circuits are possible because of the recent availability of suitable integrated circuits (IC's) developed by RCA. Technically named "complementary-symmetry/metal-oxide-semiconductors" (COS/MOS), these devices operate from a supply voltage of 3 to 15 volts over a temperature range of -40° to +85° C. We use two identical IC's each consisting of four dual-input NOR gates.

The following description of the logic switching circuits will proceed from the simplest component arrangement to the more complicated (the circuitry for monitoring temperature, activity patterns, and mortality, and for delayed turn-on).

Pulse generator

The pulse generator (fig. 3) uses all four NOR gates of one integrated circuit (IC-A). Gates A2 and A3 form an astable oscillator with a square wave output driving into the monostable circuit formed by gates A1 and A4 (Dean and Rupley 1971, RCA Corporation 1971). The output of A1 turns on the rf transmitter directly through isolation diode D2. Thus, the rate of pulse transmission is determined by components R3 and C3 and the duration of an individual pulse by R5 and C5. Our pulse generators are normally designed for a pulse width of 35 ± 5 milliseconds and a pulse rate of 30 to 120 pulses per minute. Variations in pulse rate are used to identify different transmitters operating at the same frequency.

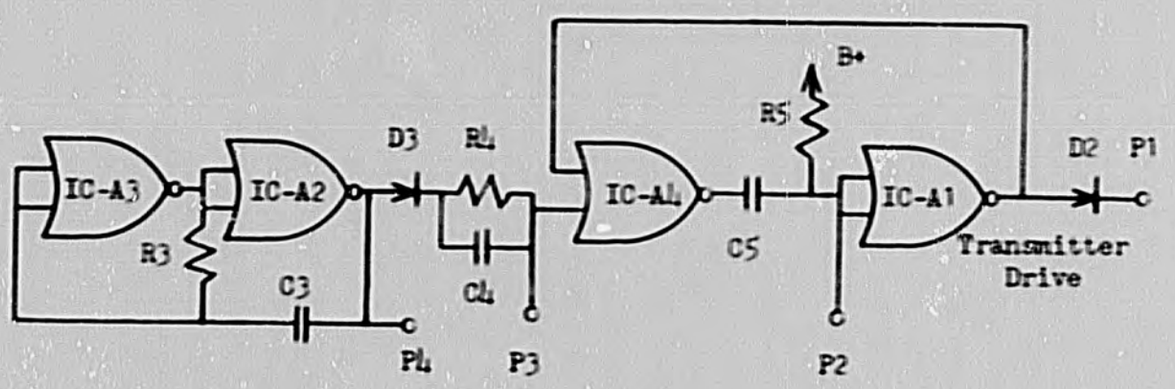

Figure 3 - Pulse generator.

Because CMOS/MOS logic gates switch at a threshold input voltage about half the supply voltage, the pulse generator can operate almost independently of supply voltage variations. Conventional transistor multivibrator circuits used in some wildlife transmitters lack this stability and are also more difficult to construct.

Temperature monitoring

The pulse generator is normally designed for temperature stability but can be easily converted to a temperature sensor by substituting a thermistor for resistor R3, R5, or both. The pulse rate or pulse width can then be calibrated directly against temperature for remote monitoring.

Activity monitoring

A normal pulsing transmitter can be converted into a motion-sensitive activity monitor by adding the circuit of figure 4 to the basic pulse generator. Each time the animal's movement closes the mercury switch, the circuit generates an extra triggering pulse into the monostable oscillator. Thus, the transmitter sends a base pulse rate plus extra pulses directly correlated with the animal's movement.

The activity circuit in figure 4 operates full-time, but half-time monitoring is possible through a slight modification of the pulse generator. Short-circuiting R4 and C4 clamps the monostable input in the high-voltage state so that the square wave output of the astable oscillator disables the activity pulsing circuit about 50 percent of the time. We have found the half-time monitor an efficient means of limiting our battery current drain while still conveying enough motion data for most purposes.

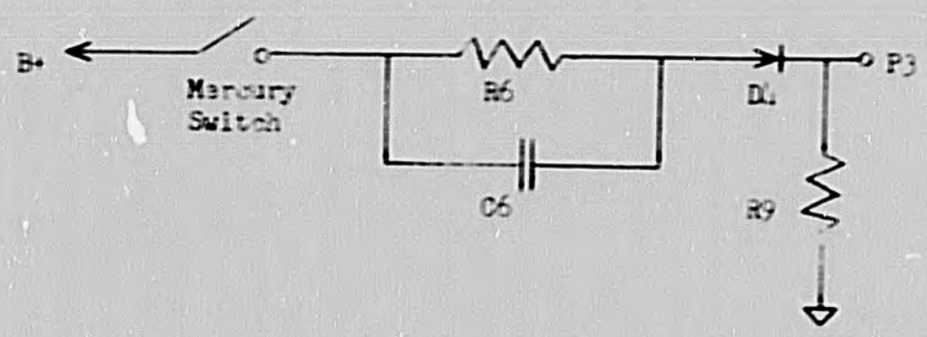

Figure 4 - Diagram of activity-monitoring circuit.

Mortality monitoring

Mortality may be monitored by sensing either a cessation of movement or a drop in body temperature. The motion-detecting transmitter is easier to attach, but the temperature-detecting transmitter, which operates only after death, requires less battery weight.

The motion-detecting mortality transmitter (fig. 5) requires a second integrated circuit (IC-B) in conjunction with the pulse generator. The output of gate B3, a pulse waveform similar to that of gate A1, charges capacitor C8. Gates B4 and B1 form a monostable oscillator triggering from input pulses generated by the mercury switch and discharging capacitor C8 through D7 and R11. Thus, the capacitor charging gate B3 continuously acts in opposition to the discharging monostable oscillator. If the animal stops moving and the mercury switch no longer functions, capacitor C8 charges enough to trigger gate B2. This clamps the output of gate A1 in the high-voltage state, and the rf transmission becomes continuous. Thus, this motion-detecting mortality transmitter can be used as a normal or activity-monitoring transmitter while the animal is alive and indicates its death by changing to a continuous signal. The interval between cessation of movement and the start of a continuous signal can be set by R8, C8, and the number of current pulses from gate B3. We have found with coyotes that a delay of 2 to 4 hours eliminates most false indications.

In the temperature-detecting mortality transmitter, a thermistor senses the postmortem drop in the animal's body temperature. D3, R4, and C4 in the pulse generator are replaced with a single resistor, and a negative-coefficient thermistor is added from P3 to ground. The thermistor and resistor are selected to bias the monostable oscillator off when the body

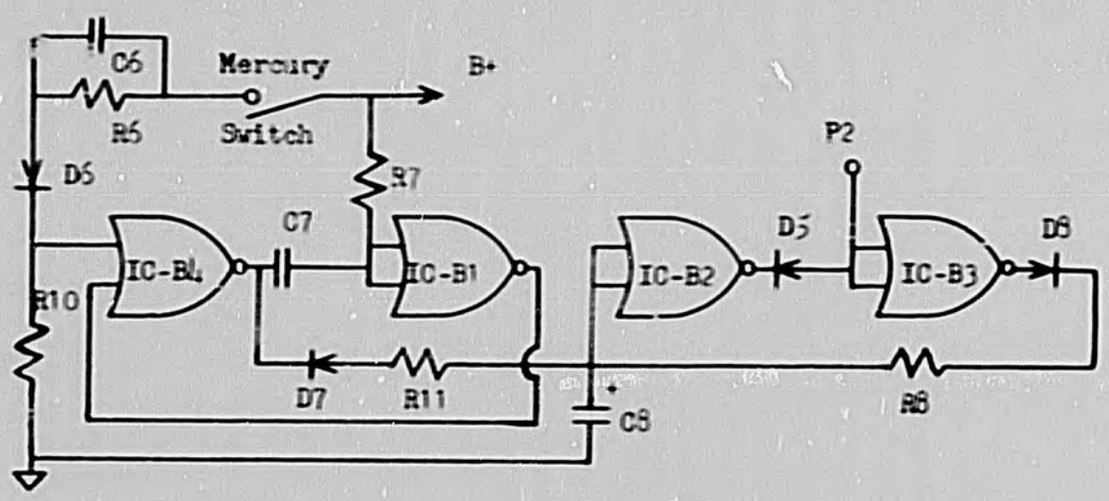

Figure 5 - Diagram of motion-detecting mortality circuit.

temperature is normal but allow operation when the thermistor is cooled. This transmitter therefore is silent until death and then sends pulsed signals.

Delayed turn-on with mortality and location monitoring

We were asked to develop a transmitter that would remain silent until either the animal died or a programmed delay was completed, and then begin transmitting pulses. We accomplished this by using an E-Cell in conjunction with the IC's (fig. 6).

In this design, mortality is sensed by postmortem temperature drop. The circuit is the same as in the temperature-detecting mortality transmitter, except that the thermistor is returned to ground through the output of gate B2, which is initially biased to ground potential by the two resistors and the E-Cell on the input. When the E-Cell "times out", gate B2 switches and reverse-biases diode D5, causing the monostable oscillator in the pulse generator to act as a normal pulsing transmitter. Turn-on of the transmitter can be delayed by this circuit for intervals up to about 4 months at an average current drain of less than 5 microamperes.

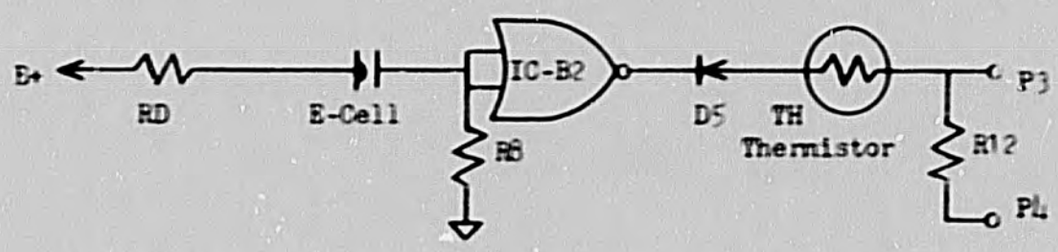

Figure 6 - Diagram of temperature-detecting mortality circuit with delayed turn-on.

Printed circuit board

The layout of the printed circuit (PC) board is shown in figure 7. In this case, both sides of the PC board are etched to simultaneously provide the circuit and indicate the placement of components. We sacrificed soldering ease to satisfy the small size restrictions normally imposed on wildlife transmitters.

If only a pulsing or activity-monitoring transmitter is required, the PC board can be cut at 2.7 cm and the part containing the IC-B circuit not used. Additional soldering pads are etched on the PC board so that the two halves can be rejoined with wires for other configurations.

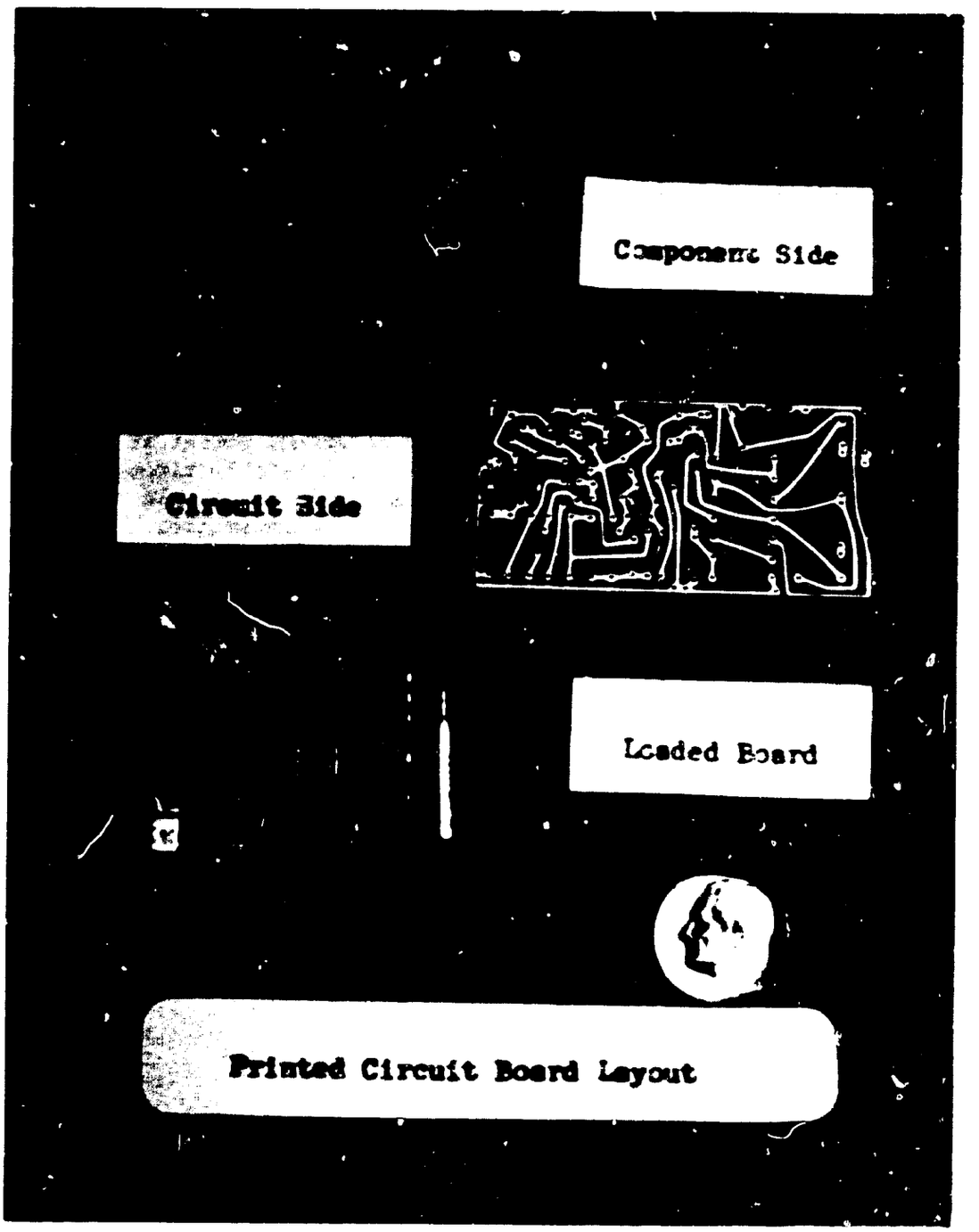

Figure 7 - Printed circuit board layout.

Table 1. Components for multiple-use wildlife transmitter[a].

Component	Description	Unit Cost[b]
R1[c]	Resistor, 1/8 watt, 0 to 50 ohms	$0.14
R2[c]	Resistor, 1/8 watt, 1K Ω	.14
R3[c]	Resistor, 1/8 watt, 10 M Ω	.14
R4,R6,R7	Resistor, 1/8 watt, 4.3 M Ω	.14
R5[c]	Resistor, 1/8 watt, 2.2 M Ω	.14
R8[c],R9,R10,R12	Resistor, 1/8 watt, 1M Ω	.14
R11	Resistor, 1/8 watt, 4.7 K Ω	.14
CC,C0,C1,C2,C4,C5[c],C6	Chip capacitor, 0.022 μf	.23
C3[c]	Chip capacitor, 0.047 μf	.29
CX	NPO chip capacitor, 12 pf	.30
C7	Tantalum capacitor, 1 μf	.21
C8[c]	Tantalum capacitor, 300 μf (DMTP series, Mallory Capacitor Co.)	1.90
Q1,Q2	Transistor MMT 3014 (Motorola, Inc.)	1.52
D1	Diode MMD 6050 (Motorola, Inc.)	0.41
D2 - D8	Diode MMD 70 (Motorola, Inc.)	.23
IC-A,IC-B	Integrated circuit CD 4001 AE (RCA)	1.18
Y1	Quartz crystal (Erie Technological Products)	-
Mercury Switch	HG 520 LO (Gordon Corp.)	0.97
TH[c]	Thermistor (Fenwall Electronics)	3.17
E-Cell	Integrator 460-0002 (Bissett-Berman Corp.)	2.25
Ferrite core	#13 Material (Fermacor Inc.)	-
L0,L1,L2	4, 5, 12 turns, respectively, of AWG 36 Magnet Wire on 1/8-inch diameter coil	-

[a]Reference to trade names does not imply endorsement of commercial products by the Federal Government.

[b]Approximate unit price based on ordering 100 parts.

[c]Values of these components are changed in some circuit designs.

DISCUSSION

The COS/MOS integrated circuits have greatly facilitated and standardized our transmitter production. Even for specialized transmitters for which printed circuit boards cannot be used, they offer better stability and ease of fabrication than individual components.

It is, of course, advantageous to operate the logic switching circuits at high impedence levels to limit their current consumption to a few microamperes. We have experimentally operated the pulse generator at impedance levels of 50 megohms and encountered no deleterious temperature effects from -29° to +38° C, which is well within the manufacturer's specifications for the plastic-encapsulated IC's. Most of the current consumption should be controlled in the rf transmitter. The only circumstance we encountered in which the logic switching circuits required a significant current was when the dc input voltage to a NOR gate equalled about half the supply voltage. This intermediate switching condition can result in a large current flow through the NOR gate but can normally be avoided through proper biasing networks.

The only major shortcoming of the IC's is their voltage requirement of at least 3 volts, which makes them marginal for operation with two mercuric-oxide cells (about 2.7 volts). We have been able to operate selected IC's at 2.2 volts, but with a noticeable loss in temperature stability. Therefore, we power most of our transmitters with three mercuric-oxide batteries (4.2 volts), which provides the added advantage of increasing the radiated power.

Radiated output power from typical transmitters is 1 to 2 milliwatts with an 11-inch antenna and a 4.2-volt supply. Transposing this output power measurement into a meaningful transmission range is difficult because of the number of receiving parameters involved, but a figure of 3 miles is reasonable with handheld equipment. Reports by our field biologists indicate that transmission ranges of over 10 miles are common when the receiving antenna is on a prominent hill. We have been able to correlate our radiated output power measurements and transmission distances with theoretical calculations for transmission loss (Jasik 1961:33-1 to 33-6), and this is helpful for predicting a usable transmission range with any transmitter.

The functions described here for the multiple-use wildlife transmitter are only a few of many theoretically possible with the PC board and two IC's. For example, it should be possible to modify the circuit to telemeter physiological or behavioral data and still retain combination functions such as delayed turn-on. We believe that the versatility of transmitter designs using IC's will greatly extend the options open to wildlife biologists monitoring wild animals.

LITERATURE CITED

RCA Corporation.
1971. COS/MOS integrated circuits manual. RCA Solid State Division Somerville, N.J., CMS-270. 160 pp.

Dean, J.A., and J.P. Rupley.
1971. Astable and monostable oscillators using RCA COS/MOS digital integrated circuits. RCA Solid State Division, Somerville, N.J., Application Note ICAN-6267. 8 pp.

Jasik, H.
1961. Antenna engineering handbook. First edition. McGraw-Hill Book Co., New York.

U.S. GOVERNMENT PRINTING OFFICE 1973—[illegible] REGION NO. 8