csd-2541

IRRI Saturday Seminar, August 19/72
Agricultural Engineering

METHODS OF SEEDING AND TRANSPLANTING OF RICE

by

C. L. Padolina and F. E. Nichols[1/]

Tremendous effort has been exerted by scientists and engineers in order to eliminate the tedious and laborious method of transplanting paddy. Even composers have tried to delete the word 'never' in the song entitled "Planting Rice Is Never Fun", to encourage a more positive attitude in this task.

World rice land area is increasing each year by a million hectares (2). Such an increase in area is sufficient to be of concern to rice economies of the world since every unit increase in area entails a corresponding additional labor and capital input if the present level of rice production is to be surpassed or at least maintained.

Labor requirements for producing rice vary with time and month of the year, method of planting, and locality (13). Tables 1 and 2 show the labor variations with respect to month and labor distribution of different operations for producing rice in Japan, considered the country having relatively the highest yield per unit area. Similar patterns exist for most rice producing areas. However, the monthly pattern will become more uniform at the higher levels as irrigation facilities increase for the tropical rice producing countries. Table 3 presents the labor requirements for various methods of planting paddy as reported by Johnson (13).

The different methods of cultivating rice are the following:

(1) broadcasting
(2) strip cultivation
(3) direct seeding in rows, and
(4) transplanting.

Broadcasting

Broadcasting is one of the established methods of cultivating rice. In Ceylon, it is estimated that about 500,000 hectares of rice (which represents 85% of the total area) is sown by broadcasting (14).

Reports from IRRI (4) show that the broadcast method gives significantly higher grain yield than transplanting using IR22 variety.

[1/] Research Assistant and Associate Evaluation Engineer, respectively, Agricultural Engineering Department, The International Rice Research Institute.

The disadvantages of the broadcast method are:

1. A larger input of labor is required for good land preparation especially in levelling of fields.

2. The seeding rate per unit area is high.

3. Difficulty in manual and mechanical weeding.

To eliminate the laborious land preparation, IRRI is studying the feasibility of adopting the zero tillage (6). Results from the previous season experiments show a very encouraging result of 8.15 tons per hectare.

Strip Cultivation

A new method of rice cultivation known as "strip cultivation" was first suggested in Ceylon by Wickramasekera in 1938 (15). This technique is the combination of broadcasting the seeds and crushing some of the seedlings 10-20 days after seeding with the use of a hand tractor or a power weeder, leaving regularly spaced strips between the rice plants.

Results from preliminary studies on strip cultivation (8) show that the yield is comparable to that of the row-sown method. This technique is an easy and labor-saving method of establishing a rice crop and it facilitates weed control by mechanical means. Its performance is comparable to other conventional methods of rice culture and it ultimately results in a lower cost of production.

The steps in strip cultivation are (8):

1. Prepare paddy field ready to sow in the normal manner.

2. Broadcast pre-germinated seed at the recommended rate of 112 kilograms per hectare.

3. Between the 10th to 14th day after broadcasting, drain the paddy field, leaving a thin film of water about one-half inch.

4. Next day, run the power tiller with weeder wheels on the standing crop; application of the first half top dressing of fertilizer during this time is recommended.

5. Impound water soon after to enable crushed weeds to decay.

6. Ten days after the first operation, the remaining fertilizer should be applied and if necessary the weeder wheels should run over the earlier strips.

Niizeki (1962) developed a machine which can eliminate the crushing or thinning of strips of rice plant. This method, called "strip broadcast",

is similar to direct seeding in rows.

The machine basically consists of: the main frame, handle, three cylindrical seed containers, sled, and a pair of lug wheels as shown in Figure 3. The wheels, made of galvanized iron sheet, drive the seed containers through chain and sprocket. Seeds fall through two sets of holes in each container. The width of the strip to be sown and the seeding rate can be adjusted by opening or closing the holes. Distance between strips, on the other hand, is controlled by sliding the containers along the shaft.

The sowing capacity of this machine is 0.4 hectare per day which is 5 times more efficient than transplanting.

Direct Seeding in Rows

Interest in direct seeding in rows dates back to the closing years of the Meiji era in Japan, when the use of a direct seeder named "Octopus legs" was introduced (2). The use of this method then slowly declined after the war and renewed its popularity in 1963 (12) in all areas except Hokkaido. In Ceylon, row seeding was first popularized among farmers in 1955 (15) by Johnpulle. He developed a simple manually drawn seeder.

Research work on direct seeding of paddy seeds both on upland and lowland conditions has been in progress at IRRI since 1966. The design concept for the lowland seeder was derived from the Johnpulle seeder as shown in Figures 1 and 2. Results from experiments conducted on the use of the IRRI seeder show that its efficiency is relatively high compared to manual transplanting as shown in Table 4 (10).

The procedure in using the IRRI direct seeder (5) is given below.

1. The land should be plowed, harrowed and levelled. The final harrowing and levelling operation should leave the field in a uniform puddled condition. Good land preparation is necessary and many may consider this a disadvantage. However the benefit of good land preparation cannot be sufficiently emphasized.

2. Seeding should be accomplished within one day after the final harrowing and levelling. However, if heavy rains are imminent, postpone seeding until after the rains as the seeds may be completely submerged, resulting in uneven rows and poor plant emergence. Seed preparation must be coordinated with the period for final harrowing and levelling to obtain germinated seeds suitable for the seeder. Proper soaking and incubation of the seeds to be planted will require 3-4 days. Prior to seeding, all the water should be drained from the field.

3. Do not apply water to the seeded field until the 5th or 6th day after seeding to allow the seedlings to be proper-

ly established first. If high temperature or dry weather conditions exist at seeding time, earlier watering in limited amounts may be required to maintain proper plant and soil moisture conditions for rapid seedling establishment.

Another direct seeder with an individual-row hopper (Fig. 4) has been designed at IRRI. Test results of this seeder show that the seeding rate (30-50 kg/ha) is lower than the 6- and 8-row IRRI seeder.

Transplanting

Direct seeding has found successful applicability in many places; however, factors concerning labor, weather and field conditions cannot allow full elimination of the use of the transplanting method. The importance of transplanting lies in the fact that weed control is simpler and more effective and the land is used for a shorter (by 20 days) period (15) than when the rice is seeded directly (13). Studies at IRRI (7) show the high labor and energy input requirements for transplanting paddy. The results of these studies are shown in Table 5.

Research in Japan shows that the labor requirements for manual and mechanical transplanting of paddy are almost the same, as shown in Table 6. Yet, in many countries like China and Japan, research efforts are directed towards the production of mechanical transplanters; the widespread trend to mechanize operations in rice production has challenged engineering ingenuity.

Rice transplanting machines already on sale and still undergoing further improvement in Japan can be roughly classified into two types. One type is for seedlings with the roots washed, and the other type, for seedlings with soil clods still on the roots.

On the first type, the seedlings are grown under normal wet-bed conditions, manually pulled and the mud washed from the roots. This is the same practice used in traditional hand transplanting. This machine can plant 100-120 hills per row in a minute (9), even if time for feeding seedlings and turning the direction of the machine is taken into account. It can finish transplanting 10 ares in 3 to 3.5 hours, or 4 times faster than hand transplanting.

The second type is of two kinds: one which can transplant seedlings with 5-6 leaves, and the other which can transplant seedlings with 2-3 leaves. The former is used less than the latter because the seedlings with more leaves are apt to have more soil clods on their roots. Both require a special nursery box with the inside dimensions fitted to the seedling tray of the machine. According to Miura (9), this machine is capable of transplanting 10 ares in 3 hours when the operator drives it in 0.4 meters per second by foot. At this rate, its capacity will be about 6 times as much as hand transplanting.

The transplanter originated in Japan and is now being tested in many interested countries like Korea and Ceylon. Table 7 presents the results of tests conducted on six Japanese transplanters.

Test and evaluation of a hand-operated (locally made) transplanter and a mechanical (Japanese made) unit is now being conducted at IRRI. Preliminary tests show that the hand operated transplanter can plant one hectare in 30 hours, while the mechanical transplanter can plant one hectare in 9 hours with an average forward speed of 0.52 meters per second.

There are some problems encountered with the two machines. On the hand-operated transplanter, the fingers often do not pick up any seedling, resulting in missing hills. This is overcome by repeating the operation but at the expense of excessive number of seedlings in some hills and a considerable reduction of field capacity. The mechanical transplanter, on the other hand, is quite difficult to balance, despite the floats, because of the horizontal movement of the seedling tray. This invariably results in crooked rows.

Viewing the labor requirements and problems encountered among the different methods of cultivating rice, we find that each method has its own advantages and disadvantages when adapted. Each method however may bring a substantial yield when practiced efficiently.

REFERENCES

(1) Beeghly, W. 1971. Heart Rate as An Indicator of Caloric Needs and Labor Efficiency. IRRI Thursday Seminar Paper, Dec. 9, 1971.

(2) Eastman, E. G. 1969. Design, Construction and Testing of Simple Seeder for Lowland Paddy. Unpublished M.S. Thesis, UPCA.

(3) Han, S. D. et al. 1971. Field Test of Various Models of Rice Transplanter. The Research Reports of the Agricultural Engineering and Utilization. Vol. 1, pp. 51-59.

(4) IRRI. 1970. Annual Report (Agronomy section).

(5) IRRI. 1971. Test Procedure - Pre-Germinated Paddy Seeder.

(6) IRRI. 1972. Rice Training Program.

(7) Johnson, L. 1963. Power Requirements in Rice Production. Paper Presented at Conference on Agricultural Engineering Aspects of Rice Production, IRRI, Los Baños, Laguna, Philippines, August 11-17, 1963.

(8) Manikkavasagar, T. N. 1968. Strip Cultivation of Rice. International Rice Commission, Paper No. AE 5/22.

(9) Miura, T. 1969. Rice Transplanting Machine. Japan Agricultural Research Quarterly. Vol. 4, No. 1.

(10) Navasero, N. C. 1969. A Row Seeder for Lowland Rice Soils. IRRI Saturday Seminar paper, Sept. 6, 1969.

(11) Niizeki, S. 1962. The Strip Broadcast Methods of Paddy Rice Sowing. Central Commercial Company (Japan).

(12) Tahara, T. 1967. Direct-Sowing Rice Cultural Method in Japan. CeCoCo (Japan).

(13) Stout, B. A. 1966. Equipment for Rice Production, FAO Agricultural Development Paper No. 84.

(14) Wikramanayake, V. E. A. 1964. A Note on the Direct Seeding of Rice in Ceylon. International Rice Commission Paper AE 64/11.

(15) _____. 1971. Direct Seeding and Transplanting Rice. Paper Presented During the International Rice Research Conference. (Paper No. 71-03.)

Table 1. Labor requirements for producing rice in Japan by month, 1960.*

Month	Hours per hectare
January	5.9
February	5.9
March	25.7
April	111.8
May	273.4
June	338.0
July	221.1
August	92.9
September	172.7
October	308.0
November	144.0
December	29.9
Total	1726.7

*B. A. Stout. Equipment for Rice Production. FAO Agricultural Development Paper No. 184. 1966.

Table 2. Labor requirements for producing rice in Japan, 1960.*

Operation	Hours/ha	Percentage
1. Seed selection	3.2	0.2
2. Seed soaking	3.7	0.2
3. Rice nursery preparation	90.0	5.3
4. Plowing	100.4	5.8
5. Fertilizer application	67.9	3.9
6. Puddling	67.8	3.9
7. Collection, transportation, and transplanting of seedlings	263.3	15.3
8. Split application of fertilizer	17.5	1.0
9. Weeding	265.5	15.4
10. Irrigation and drainage	64.7	3.8
11. Caretaking	154.1	8.9
12. Harvesting	381.4	22.1
13. Threshing	188.6	10.9
14. Husking	57.6	3.3
Total	1726.7	100.0

*B. A. Stout. Equipment for Rice Production. FAO Agricultural Development Paper No. 184. 1966.

Table 3. Average labor and power requirements for planting rice by different methods.*

Method	Manual (Hr/ha)	Animal (Hr/ha)	Engine (Hp-hr/ha)
1. Direct seeding by making a hole with a stick and covering in dry soil	160	-	-
2. Broadcast by hand on dry seedbed	3	-	-
3. Line seed by push or pull type planter in dry soil	20	-	-
4. End-gate or tractor powered rotary seeder	0.4-1.0	-	15-30
5. Grain drill 15-40 hp tractor in dry soil	1.2	-	35
6. Aerial seeding	0.3-0.6	-	16
7. Line seed by manual planter in puddled soil	10-16	-	-
8. Grain drill, 35-40 hp tractor with skeleton wheels	3.1	-	5.6
9. Transplanting			
(a) Prepare nursery seedbed and grow seedlings	120.0	10	-
(b) Pull and bundle seedlings	30-40	-	-
(c) Transport seedlings to field by hand	6	-	-
(d) Transplant	80-160	-	-

*Loyd Johnson. Power Requirements in Rice Production. 1963.

Table 4. Comparison between manually transplanted and mechanically seeded plots using the IRRI-developed eight-row seeder, wet season, 1969. [a]

Method	Seed used (kg/ha)	Labor (man-hr per ha)	No. of tillers/m^2 (mean)	Tiller weight (g/m^2)	Yield (mean)
Transplanted in rows [b]	45	199	249	448	5098
Seeded (with 8-row experimental seeder)	52	4.89 [c]	460*	630**	5434

[a] Data based on quarter-hectare plots. Soil condition: Maahas clay loam, shallow hardpan with an average depth of 5 in.

[b] Work done by 8 women: 2 on the planting guide and 6 doing the transplanting. Does not include time in preparing seedling nursery.

[c] Labor required in operating the seeder includes placing of string 1 meter away from the levee as guide for straight seeding; also includes refilling of seed hopper with pre-germinated seeds. Does not include time spent in germinating and incubating seed.

* Significant.

** Highly significant.

Table 5. Human energy input for specified tasks in rice production, IRRI, 1971. [a]

Task/Technology	Unit	No. of OBS	Total man-min per unit	Energy input k-cal/min	Energy input k-cal/unit
SEEDING					
Mechanical seeder	Ha.	1	312.00	11.81	3684.72
Transplant	Ha.	10	6415.00	3.09	17937.25
Broadcast	Ha.	8	114.00	6.00	684.00
WEEDING					
Hand 1X	Ha.	3	3955.80	5.59	22111.69
Rotary 2X	Ha	2	3575.40	6.35	22739.57
Power 2X	Ha.	2	1521.60	7.75	11826.52
Herbicide	Ha.	1	114.00	6.00	684.00
HARVESTING					
Sickle	Ha.	19	3899.22	5.02	18790.77
THRESHING					
"Hampasan"	Ton	3	980.26	5.20	5096.04
IRRI Table Thresher	Ton	4	884.24	3.73	3296.00

[a] W. Beeghly. Heart rate an indicator of caloric needs and labor efficiency. IRRI Thursday Seminar paper, Dec. 9, 1971.

Table 6. Labor requirements for transplanting rice in Japan.*

Transplanting by hand		Transplanting by machine	
Operation	Man-hr per ha	Operation	Man-hr per ha
Removal from nursery	100	Nursery and loading of machine	120-220
Transplanting	120	Transplanting	10-30

*H. Ezaki. Research on Rice Transplanting in Japan. 1963.

Table 7. Performance of six Japanese transplanters.*

Treatments	Planting time (min/10 a)	Turning time (min/10 a)	Supply time of seedling (min/10 a)	Total	Index	Remarks
Shibaura	94.50	12.30	65.20	172.00	22.75	Soil
Daikin	170.00	12.17	18.75	200.92	26.58	prepar-
Yanmar	77.625	13.585	31.67	132.88	17.58	ation &
Mitsubishi	58.00	17.50	38.85	114.35	15.13	plowing
Mametora	80.55	8.19	56.25	144.99	19.18	time not
Kanryu	131.00	43.50	6.50	181.00	23.94	included
Check plot	756.00	-	-	756.00	100.00	

*S. H. Han, S. R. Kim, H. Y. Kim, and K. S. Shin. Field test of various models of rice transplanters, 1971.

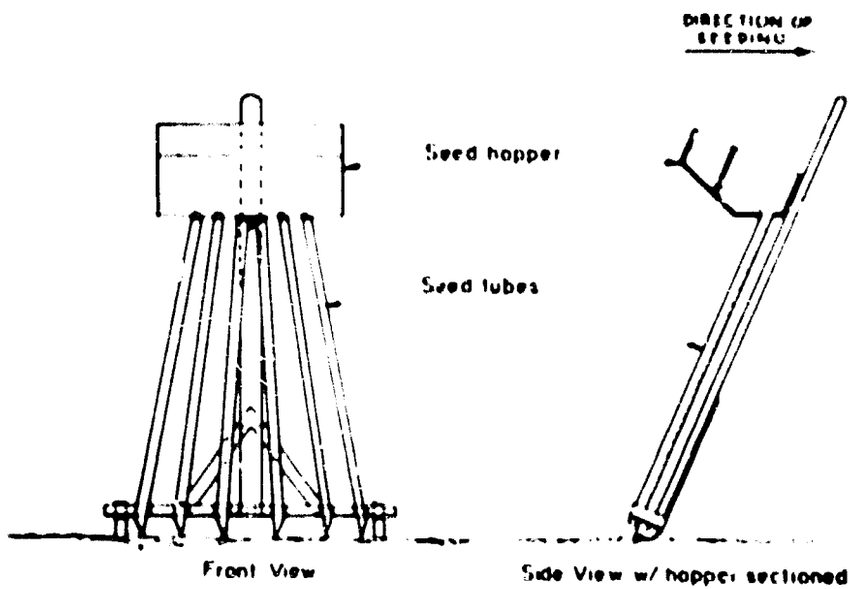

Fig 1 CEYLON PORTABLE 6-ROW SEEDER
(Johnpulle seeder)

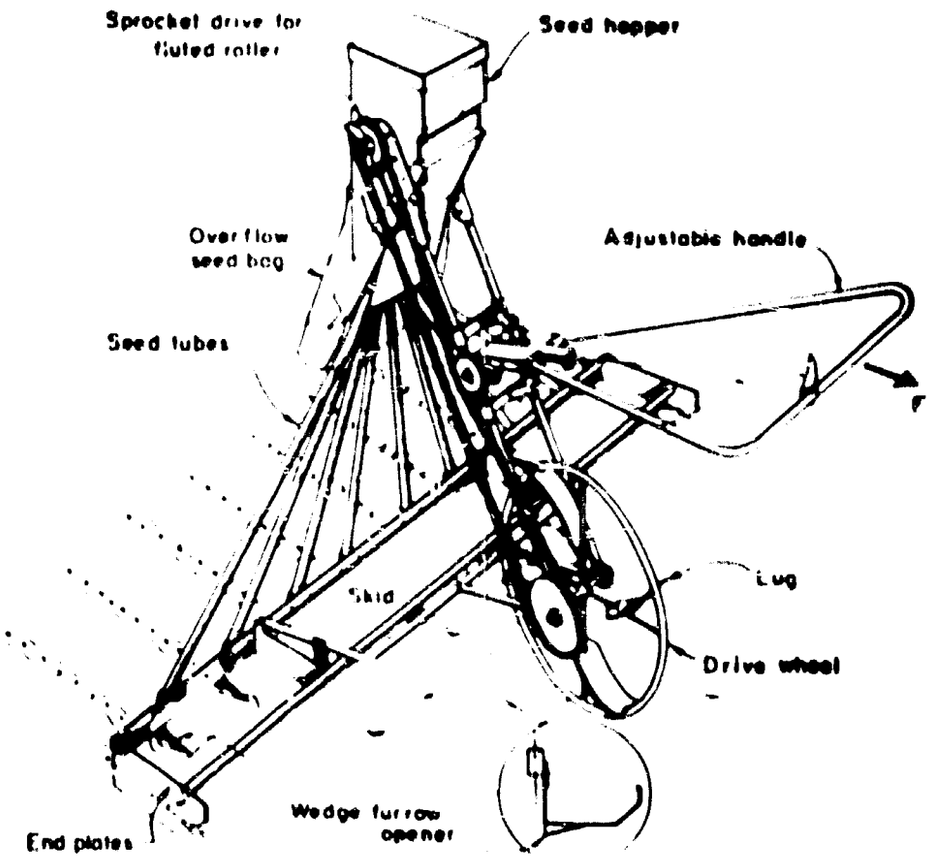

Fig 2 IRRI ROW SEEDER FOR PRE-GERMINATED PADDY

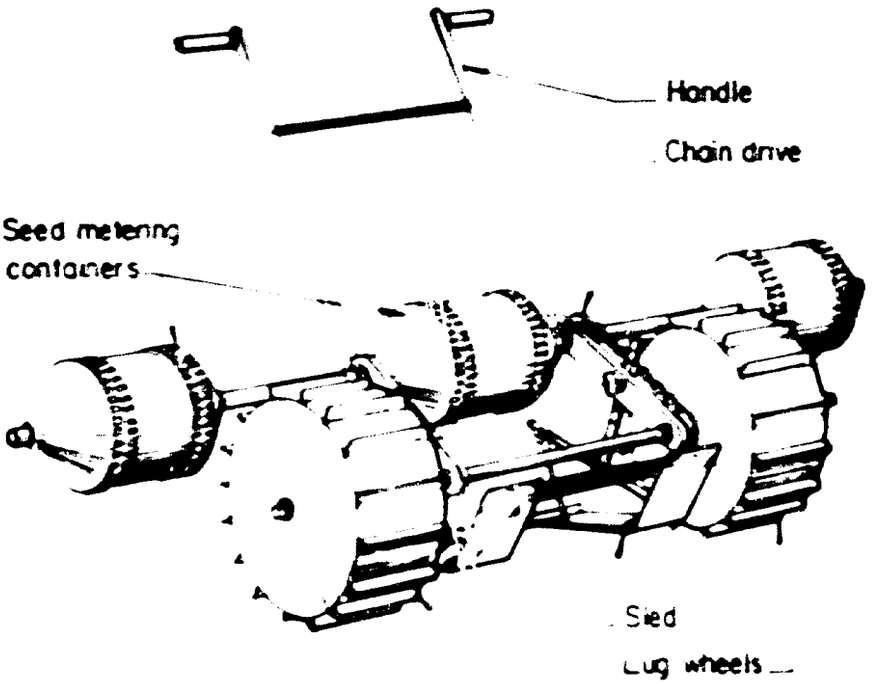

Fig. 3. "Strip broadcast" seeder.

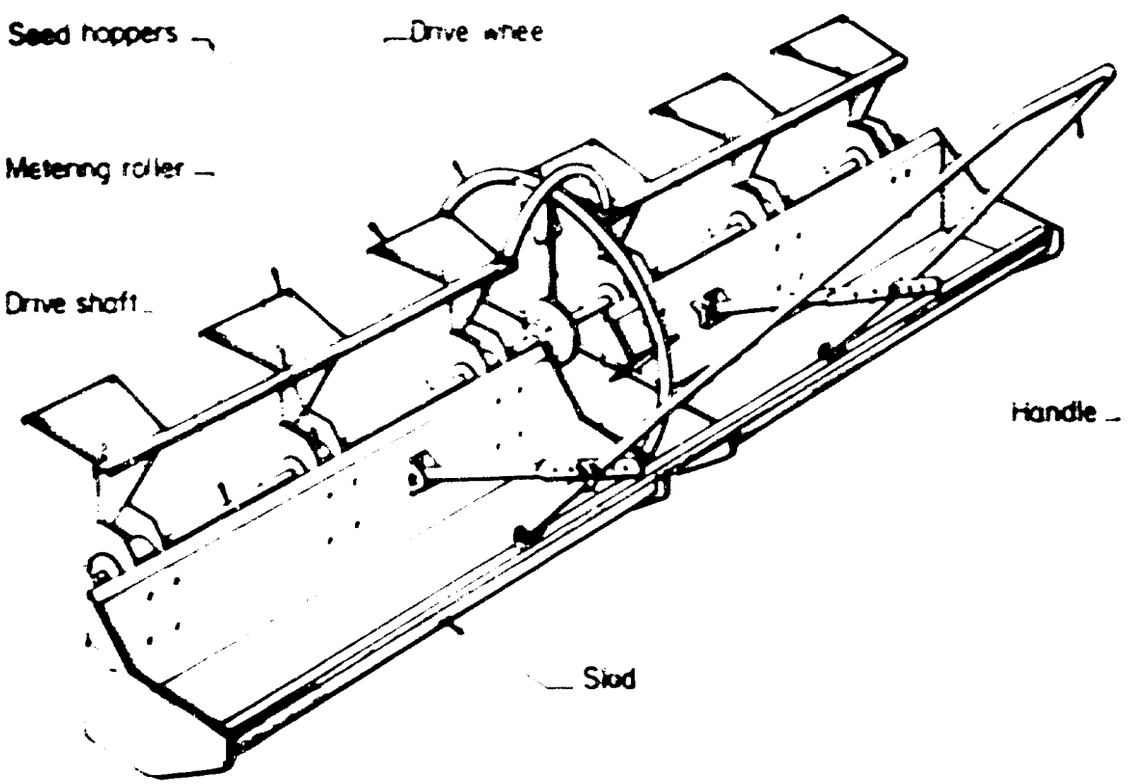

Fig. 4. IRRI individual hopper 6-row seeder for lowland conditions.