PD-WA142

EDUTEL
COMMUNICATIONS & DEVELOPMENT, INC.
701 WELCH ROAD, SUITE 225, PALO ALTO, CALIFORNIA 94304 415/328-4972
TELEX: 345566 EDUTEL PLA CABLE ADDRESS: EDUTEL PALO ALTO

5 February 1980

Dr. Robert F. Schenkkan
AIDSAT Project Officer
AGENCY FOR INTERNATIONAL DEVELOPMENT
Office of Education
Development Support Bureau
Room 311, SA/18
Washington, D.C. 20523

Dear Bob:

Enclosed is our final report entitled "System Considerations in the Design of Rural Satellite Communications Networks."

We have added a considerable amount of material to the DAMA section which should make this method of demand-assigned multiple-access easier to understand and use.

Please feel free to contact me if you have any questions.

Sincerely,

James M. Janky

James M. Janky
Vice President

Encs.
JMJ/veb

1133 FIFTEENTH STREET, N.W., SUITE 1000, WASHINGTON, D.C. 20005 • 202/223-9233

SYSTEM CONSIDERATIONS
IN THE DESIGN OF
RURAL SATELLITE COMMUNICATIONS NETWORKS

PREPARED FOR
ROBERT F. SCHENKKAN
AGENCY FOR INTERNATIONAL DEVELOPMENT
OFFICE OF EDUCATION
DEVELOPMENT SUPPORT BUREAU
ROOM 311, SA/18
WASHINGTON, D.C. 20523

JANUARY 1980

BY

EDUTEL
COMMUNICATIONS AND DEVELOPMENT, INC.
701 WELCH ROAD • SUITE 225 • PALO ALTO • CALIFORNIA 94304 • 415/328/4972

2

SYSTEM CONSIDERATIONS IN THE DESIGN OF
RURAL SATELLITE COMMUNICATIONS NETWORKS

TABLE OF CONTENTS

SUMMARY OF RESULTS

Frequency Conversion iii

DAMA Systems iv

GLOSSARY v

Chapter I: FREQUENCY CONVERSION EQUIPMENT

1.0 INTRODUCTION 1

2.0 SYSTEM CONSIDERATIONS 2

2.1 Why We Need Upconverters and Downconverters 2

2.2 Frequency Stability and Noise 4

2.3 System Requirements 6

2.4 System Frequency Tolerances 7

2.5 Modulation 8

3.0 HARDWARE DISCUSSION 9

3.1 Basic Oscillator Types 9

3.2 Synthesizers and Microwave Frequency Sources 11

3.3 New Technology 13

4.0 IMPACT ON SYSTEM PLANNING FOR RURAL COMMUNICATIONS 15

Chapter II: DAMA: DEMAND-ASSIGNED MULTIPLE-ACCESS

1.0 INTRODUCTION 17

2.0 THE NEED FOR DAMA 18

3.0 DEFINITION OF DAMA 21

4.0 REVIEW OF KEY CONCEPTS IN DAMA THROUGH SOME ANALOGIES.. 22

5.0 DAMA FUNCTIONS 24

3

6.0 TYPICAL SATELLITE SYSTEMS FOR AID TO CONSIDER 26
7.0 REQUIREMENTS OF THE EXAMPLE SYSTEMS: DAMA vs. NO DAMA.. 29
8.0 CUSTOM DESIGN RECOMMENDATIONS FOR EXAMPLES 1 AND 2 33
9.0 CONCLUSIONS 36

LIST OF FIGURES AND TABLES

Fig. 1 A tuned radio frequency receiver with no frequency conversion equipment 2
Fig. 2 The "superheterodyne" receiver 2
Fig. 3 Block diagram of the basic modulator and upconverter for a 6 GHz transmitter 3
Fig. 4 Power Spectral density of an oscillator 5
Fig. 5 Indirect synthesis using a divider and a stable reference 10
Fig. 6 Indirect synthesizer with programmable divider 11
Fig. 7 A frequency conversion system for transmit upconverter using only one oscillator 13
Fig. 8 Simple thin-route up/downconverter 14
Fig. 9 Basic satellite configuration radios and channel numbers 19
Fig. 10 Star configuration 27

Table 1 EXAMPLE SYSTEMS 31

SUMMARY OF RESULTS

Frequency Conversion

1. The key issues in frequency generation equipment design are the specifications for:

- stability
- tuneability
- modulation

The conflicts among these three functions, when taken with the basic flexibility demanded by typical communications engineers in the context of old satellite designs, leads to extremely complicated hardware. A reasonable reduction in performance requirements, and therefore cost, can be obtained for no overall penalty if the spacing between channels can be increased.

2. Innovations in oscillator design make it possible to change the type of modulation used, further simplifying the transmitter design at no expense to capacity.

3. Changes in system architecture in the choice of channel assignment for pairs of communicating stations could also provide significant cost reduction in the frequency generation equipment. If half-duplex operation were adopted, then any two stations could tune to the same channel for transmit and receive, and the up and down converter functions merged and hardware simplified.

4. An even greater simplification could occur if tuning were completely eliminated and all remote stations operated on preassigned channels. There is substantial loss of flexibility here, and it may be too great a price to pay if the network plan is to become fully integrated in a switched national voice network. If the network is to remain small, then it may be worth considering.

5x

DAMA Systems

1. The key issue in DAMA systems is the tradeoff in cost between the DAMA system itself and the other resources it saves when used, namely, earth station radios and satellite channels.

2. Current system designs are oriented towards large-scale programs with many stations and hundreds of channels. For AIDSAT programs of more modest proportions, DAMA systems may not be cost effective; i.e., the savings in hardware and satellite costs are more than offset by the cost of the DAMA system.

3. By the use of imaginative approaches to the specific network configurations, many of the advantages of conventional DAMA systems can be obtained without their expense. Call queuing and multiplexed voice shared with outbound television signals are two examples described in detail.

6

GLOSSARY

Amplifie:	*A device that increases the power level of a radio signal.*
Bandwidtl	*Amount of frequency spectrum or width required for a signal*
Baseband	*Frequencies at the lower end of spectrum, basic signal before modulation*
Carrier	*Radio frequency signal which is transmitted or received*
Channel Capacity	*Number of independent signals that can be placed in a given frequency band*
Cavity	*A microwave device, usually cylindrically shaped, which acts as a filter or frequency resonator.*
Demand Assignment (DAMA)	*Demand Assigned, Multiple Access: a method of stacking multiple frequencies in a communication system*
Downconverter	*A device that converts a microwave signal to a lower frequency.*
Feedback	*A method of feeding part of the output of an electronic device back to the input.*
Frequency	*Rate at which a radio signal vibrates.*
Fundamental	*The basic or lowest frequency in a signal*
Gigahertz (GHz)	*One billion cycles (10^9 cycles)*
Harmonic	*Upper frequency components in a signal which are multiples of the basic or fundamental signal*
Hertz	*A cycle per second; alteration of a signal*
Intermediate Frequency (IF)	*Frequency range between baseband and radio frequency in radios*
Kilohertz (kHz)	*One thousand cycles per second*
Megahertz (MHz)	*One million cycles per second*
Modulation	*Imposing of baseband frequencies, such as voice, on a higher frequency carrier for transmission*

7x

Oscillator	*A device that generates frequencies, a frequency source*
Phase	*The angular state of alternation of a radio signal between zero and its positive and negative maximums*
Phase Detector	*A device that compares the phase of two signals and provides an output proportional to this phase difference*
Phaselock	*Technique whereby the phase difference between two signals is used to drive one into phase coincidence with the other*
Phase Shift Keying (PSK)	*Modulation method where the phase of a carrier is alternated between 0° and 180° by the state of the baseband signal*
Residual Noise	*Noise and random frequency output of an oscillator or frequency source*
Single Channel per Carrier (SCPC)	*A modulation method wherein only one voice or digital channel is placed on each carrier*
Stability	*The ability of an oscillator or frequency source to maintain a constant frequency output*
Synthesizer	*A frequency source which outputs many frequencies, the stability of which is governed by phaselocking to a lower reference frequency*
Upconverter	*A device that converts lower frequency signals up into the microwave frequency region*

8

Chapter I

FREQUENCY CONVERSION EQUIPMENT

1.0 INTRODUCTION

The purpose of this report is to present a tutorial on frequency converters in satellite communication systems and the oscillators that act as the frequency generation source in these converters. Functionally, the upconverters and downconverters in a satellite earth station play an important part since they are the devices that get the baseband and intermediate frequency signals to and from the microwave bands where actual transmission takes place. These devices and the components that comprise them must operate under a number of constraints in order to be of any value. Important among these constraints are frequency stability, power output, and noise. In this paper we will be discussing the reasons for these constraints, the problems in operating under them, and their implications in terms of system operation and hardware design. We also will discuss actual device types and some of the newest developments in this area.

It is in the area of new device and new materials development that some interesting answers to long-standing problems in frequency generation lie. Direct frequency generation at adequate power levels in the microwave bands is now possible so that frequency multiplication and its attendant noise problems can be bypassed. If certain design or system constraints can be relaxed, these new devices may find applications in low-cost, thin-route satellite systems. Most important of these areas for consideration are using fixed frequency separations in SCPC channel assignments, spacing channels farther apart so stability requirements are relaxed, and using direct modulation at microwave frequencies rather than at baseband. Also, if both terminals in a two-way hookup can transmit on the same frequency, equipment may be simplified. The discussion that follows describes the way that converters operate in a satellite communications system and shows how these design requirements affect system operations.

2.0 SYSTEM CONSIDERATIONS

2.1 Why We Need Upconverters and Downconverters

Upconverters and downconverters have been used in microwave equipment for nearly forty years, or since the inception of microwave transmission, for two basic reasons.

First, in receivers it is much easier and less expensive to amplify signals at lower frequencies, such as 70 MHz, than it is at 4 GHz. Nearly all radio transmission must be amplified before detection is possible in order to be able to distinguish the signal from circuit noise.

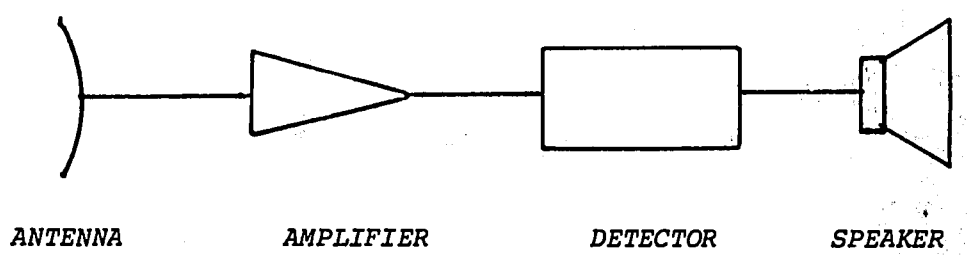

Fig. 1 —— A tuned radio frequency receiver with no frequency conversion equipment.

Radios were made without frequency conversion equipment until the 1930s, when Col. Armstrong invented the "superheterodyne" receiver. This reduced the need for expensive, synchronously tuned amplifiers to only one or two stages.

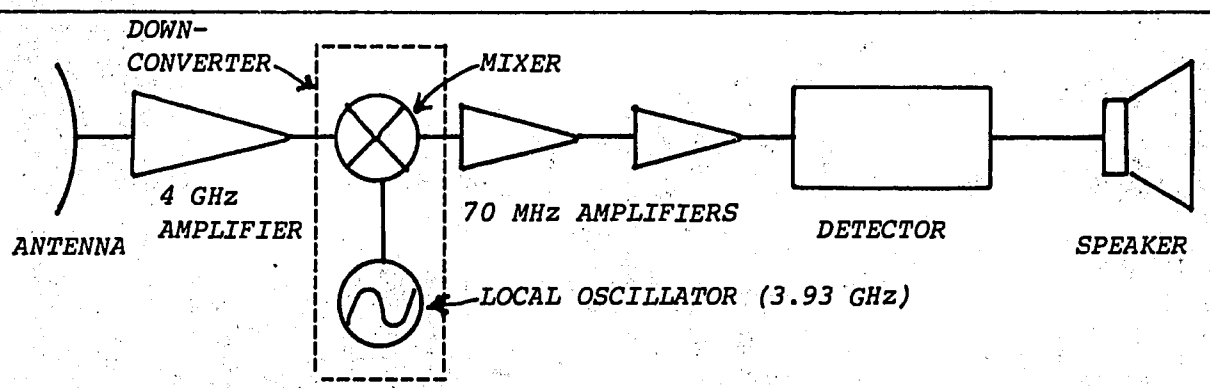

Fig. 2 —— The "superheterodyne" receiver.

The second basic reason for using up and down converters in microwave equipment is because by changing the local oscillator frequency the receiver could be tuned to other channels. The 70 MHz amplifiers are much less expensive than the 4 GHz amplifiers, and so the introduction of a local oscillator and mixer, commonly referred to as a *downconverter*, provided tuning, greater flexibility, and lower cost, among other things.

Upconverters are used to shift a modulated carrier from 70 MHz, where it is relatively easy to generate and control, to the actual transmission frequency, say 6 GHz. Because voice transmissions need only 20 to 100 kHz of rf bandwidth, it is much easier to attain the frequency stability we need at 6 GHz by modulating a much lower frequency carrier and then shifting it upwards with a very stable upconverter. Thus, because of this conflict between frequency stability and its attendant requirements, and the opposite requirements for modulation and tuning, modulation and tuning are performed at low frequencies and the stable carrier is generated at a higher frequency. When frequency modulating or tuning, one wishes to change the carrier frequency according either to the information being transmitted or to a new channel. But, it is also desirable to keep the entire signal within a specified bandwidth to minimize the effects of noise and, of course, to keep the signal in the passband of the receiver at the distant end. Thus, we need a *stable* carrier center frequency. At 6 GHz, direct frequency modulation of a carrier is just not compatible with the other requirements in the receiver. Therefore, we must upconvert. This conflict between the need for stability, the need to modulate, and to tune will be discussed in more detail as we progress.

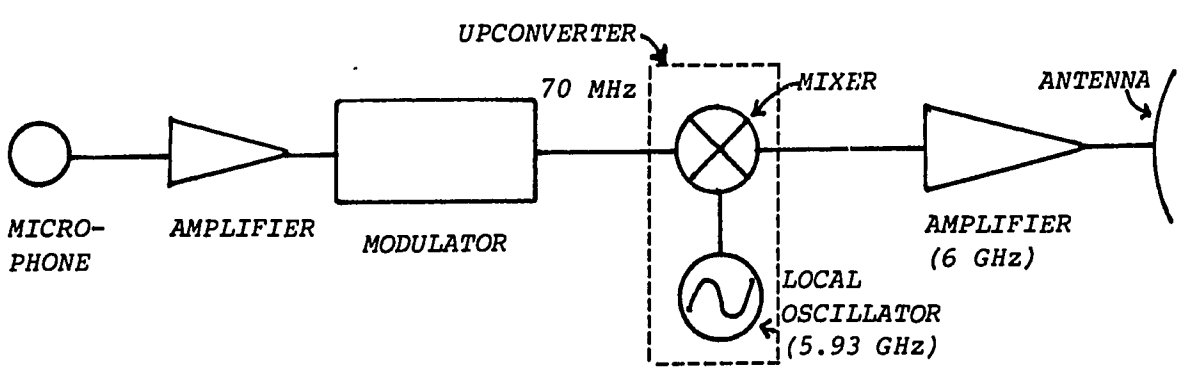

Fig. 3 —— Block diagram of the basic modulator and upconverter for a 6 GHz transmitter.

2.2 Frequency Stability and Noise

ne of the most important requirements placed on upconverters and downconverters in microwave communication systems is that of frequency stability. In particular, it is the frequency stability of the oscillator within the converter that is of interest. There are several aspects of frequency stability, but we will discuss only random frequency variations and residual noise here. If we look at the spectral density plot of an oscillator's output (as shown in Fig. 4), we will see the desired frequency at the center of the plot surrounded by additional noise spikes which decrease as one moves away from the center frequency. The noise output close to the center frequency is caused by variation in the output frequency around the desired value. These variations in frequency are the result of the short term frequency instability of the oscillator. Longer term variations in frequency also occur because of temperature and aging of the frequency source device. The noise spikes farther from the center frequency are considered more in the nature of true noise, and this noise is the result of the electronics designed around the oscillator as well as physical processes within the device itself. The two main processes discussed here have two major effects on equipment operation. These effects are:

- causing the radio transmitter or receiver to depart from the proper frequency (frequency variation); and

- degrading the signal quality (noise).

External environment is a very important factor in determining the stability characteristics of an oscillator. Such physical processes as temperature, humidity, mechanical shock, and vibration cause random shifts in carrier frequency. Also, the device itself may change its resonant characteristics over longer periods of time, and concomitant shifts in frequency take place. Even though the frequency source device may be intrinsically stable, requirements of the system result in equipment design techniques that compromise frequency stability. These requirements are such things as the need for rapid, accurate shifting from one frequency

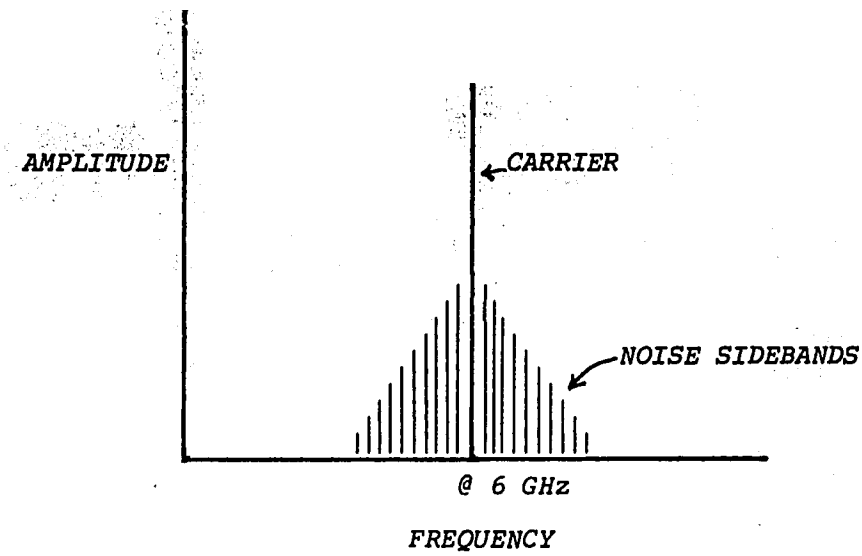

Fig. 4 —— Power spectral density of an oscillator.

to another, as in demand assigned multiple access (DAMA) systems, and the need to set the frequency at any one of many closely spaced frequencies with a minimum of component changes. These requirements are particularly true in today's single channel per carrier (SCPC) voice transmission systems for satellites. Here, the spacing between carriers is as low as 22.5 kHz, and the signal bandwidths are as small as 15 kHz. This spacing is a fractional frequency change of only $15000/6 \times 10^9$ or 2.5×10^{-6}. This is indeed a very small step. Satisfying these requirements usually is in conflict with the conditions for maximum frequency stability. Therefore, a great deal of effort has gone into devising techniques and devices that will maximize frequency stability and yet allow the flexibility needed for settability, tuning, and modulation of the frequency source.

13x

2.3 System Requirements

Communications engineers nearly always try to maximize the channel capacity of whatever systems they are building regardless of the consequences. In the situation of interest here, maximum channel capacity means placing as many SCPC voice channels as possible within one transponder band. This, in turn, means the channels must be narrow-band and spaced closely together. It is this requirement that makes frequency stability so important in a satellite communications system. Without stable frequency sources, the various transmitters and receivers would tend to overlap and to cause interference between what should be independent voice channels. Worse, the signals would wander and thus information would be lost.

Under present practices, much of the frequency stability problem in a satellite system can be eliminated by the use of pilot tones. If a transmitter derives a pilot tone from the same source that is used for the message channels, a distant receiver can lock its local oscillator to this pilot tone to compensate for any drift in the satellite or the receiver. Since both the pilot tone and the message channel pass through the satellite and the distant receiver, any frequency uncertainty in either of these equipments will have the same effect on both the message channel and the pilot tone. The receiver's local oscillator (LO) is thus altered in frequency by the same amount as the incoming signal, and the IF frequency remains constant.

Beyond the close spacing of carriers in SCPC systems, if many channels are available the system usually includes some sort of demand assignment controller. This subsystem, or DAMA (demand assigned multiple access), allows switching the transmitter and receivers to any of many available frequencies according to traffic demands. Therefore, rapid switching and accurate frequency setting is another system requirement for SCPC systems.

Finally, in the transmitter, some means must be provided for modulating the carrier signal. Historically, this operation has been performed at low frequencies, then the modulated carrier frequency is either translated or multiplied up to the transmission frequency.

Methods and devices are now becoming available that allow the transmission frequency to be generated directly and the modulation imposed either on the same device or by a subsequent component in the transmit chain. Thus, the system requirements in conventional satellite SCPC systems that have been driving the design improvements (and usually also the costs) are

- close spacing of channels,
- narrow modulation bandwidths, and
- the need to modulate the carrier.

Any relief in system costs must be aimed at altering these requirements.

2.4 System Frequency Tolerances

As an example of the tolerances on carrier frequency drift and uncertainty, INTELSAT Standard B downconverter frequency stability limits are as follows:

±2 kHz short term (24 hours)

±10 kHz long term (7 days)

The retranslation frequency uncertainty in the satellite can be as much as ±25 kHz. The downconverter frequency tolerance and the satellite frequency tolerance can be tracked out by the pilot tone system, leaving only the transmitter instability, which is ±250 Hz for each transmitted carrier. Transmitter or upconverter stability is usually designed to be plus/minus one part in 10^8 or ±60 Hz. The entire system frequency uncertainty is thus plus/minus two parts in 10^8 or ±120 Hz since both the pilot generator and the upconverter oscillator could be 60 Hz from the desired frequency. Without a pilot carrier, the instabilities of all three oscillators (transmitter, satellite, receiver) could add up, giving as much as ±27.2 kHz. SCPC channels are often placed as close as 45 kHz apart, so wider spacing would have to be used if a pilot system is not included. Since pilot carriers are used in most SCPC systems, efforts at improving frequency stability are usually directed toward the upconverter.

15

2.5 Modulation

The choice of modulation is extremely important, although it has been overlooked as a variable because everyone has taken it for granted that frequency modulation is the only way to go. Normally, the voice signal is modulated onto a 70 MHz carrier because the percent bandwidth of the modulating signal is much higher, and it is therefore easier (up to a point) to control the design. This 70 MHz signal is then translated through successive stages to the final transmit frequency at 6 GHz. The upconverter provides the signals, mixers, and filters for effecting this translation. Some type of power amplifier is used to bring the signal to the desired level.

Much of this could be simplified or eliminated if the modulation could be done directly at 6 GHz. Frequency modulation at these frequencies is very difficult, if not impossible, if one must maintain the center frequency stability requirements. Thus we should look at other types of modulation. Phase-shift-keyed digital modulation is feasible and could be implemented easily and directly at 6 GHz. To our knowledge, it has not been done commercially because of conventional wisdom; i.e., it is better to use an upconverter to do the tuning. This approach should be looked at in more detail.

3.0 HARDWARE DISCUSSION

3.1 Basic Oscillator Types

Microwave frequency sources consist of combinations of oscillators, multipliers, phaselock circuits, and amplifiers. A variety of different techniques have been developed over the years, and these techniques are covered extensively in the literature.

There are two basic oscillator types used in microwave sources. These types are the feedback oscillator and the negative resistance oscillator. In the feedback oscillator, start up of oscillation begins from the noise output of the basic device, and the output of the device is fed back to the input in such a way that one particular frequency tends to be accentuated, and this signal is further amplified and appears as the output of the device.

The negative resistance oscillator also starts its operation from the white noise of the device, and the impedance of the device plus the external impedance of the load combine to provide a negative resistance at certain frequencies, thus allowing oscillations to build up. Oscillators of these two types are the basic devices within frequency sources, or synthesizers, of which also there are two types: direct and indirect. A direct frequency synthesizer is one in which various oscillators are combined via switching to provide many different frequencies according to a programmed control. Indirect synthesizers use combinations of crystal oscillators and high frequency oscillators where the higher frequency oscillator is phaselocked to the crystal to provide frequency stability. Various frequencies can be derived by dividing the output frequency by different factors to compare in a phase comparator with the crystal reference frequency. Conversely, the basic oscillator can be a low frequency device which is phaselocked to the crystal reference. The output of the oscillator is then multiplied in frequency to derive the desired output frequency, as shown in Fig. 5. Frequency changing is accomplished by using various multiplying factors or by tuning the basic oscillator over some band of frequencies. Feedback stabilized oscillators use crystal oscillators, transister oscillators,

17x

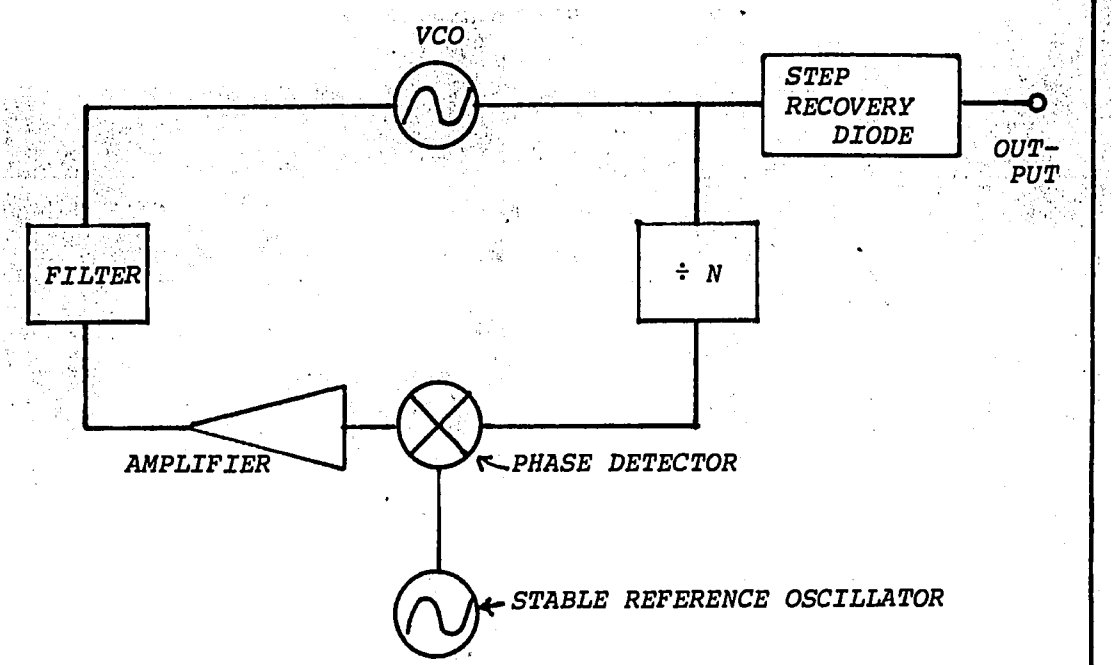

Fig. 5 —— Indirect synthesis using a divider and a stable reference.

and cavity stabilized oscillators. Crystals provide very stable frequency outputs because of the physical characteristics of a quartz crystal cut in a certain way. The output of the amplifying device is fed back to the device input or to the crystal to enhance the vibrations which occur when the crystal is put under certain mechanical and electrical stresses. The cavity oscillator uses the narrowband resonance characteristics of a metal cavity to stabilize the frequency output of transistors in a positive feedback (and therefore oscillating) circuit. Negative resistance oscillators use Gunn and avalanche diodes. These devices can be modeled by an equivalent circuit which can be shown to have a negative resistance over a certain range of frequencies. Cavity stabilization is used with these types also.

18

3.2 Synthesizers and Microwave Frequency Sources

A frequency synthesizer is a device which produces one or more frequencies numerically related to a reference frequency such that the long term frequency accuracy and stability of the output are determined by the reference frequency. Techniques such as addition, subtraction, multiplication, division and phaselocking are used. In this section we will be discussing mainly the indirect type of synthesizer.

We have already established the need for frequency stability and the need for rapid, accurate set-on of frequency to any one of a large number of closely spaced channels in a communications system. The frequency synthesizer is one way of accomplishing this. A functional block diagram of an indirect synthesizer is shown in Fig. 6. The reference input is most likely a crystal so that the overall stability of the output frequency is that of the crystal. The VCO usually operates at around 1 GHz or at a lower frequency, and then it is multiplied to the vicinity of 1 GHz. The programmable divider divides the output frequency down to equal the reference frequency so the phase of the two can be compared in the phase detector. The programmable divider allows division by *n* so that many frequencies can be generated. The output of this device can be used as the reference frequency for a higher frequency source where the output of the oscillator of that source is phaselocked to the synthesizer output for stability. The output of the higher frequency

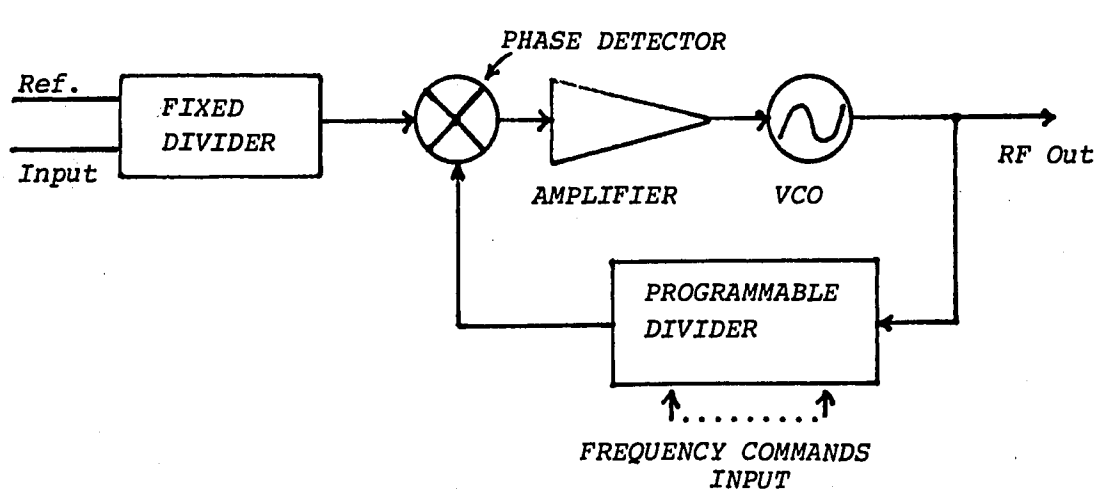

Fig. 6 —— Indirect synthesizer with programmable divider.

19x

oscillator is also multiplied to achieve frequencies in the higher microwave region. Such synthesizers and sources can be very stable, especially in the reference device is enclosed in a temperature-constant oven. Stabilities on the order of one in 10^8 are achieveable in this manner, sufficient for the upconverter requirements discussed earlier.

One of the problems with synthesizers in which multiplication is used to achieve the final output is the fact that the noise level of the basic oscillator is multiplied by the square of the multiplication ratio. Also, residual noise is high from programmable dividers and phase detectors, and spurious levels are increased if small frequency steps are attempted since reference frequency components tend to show up in the output. These problems, plus the cost and complexity of synthesizers, provide the incentive to find other techniques of microwave frequency generation. One reason for this study is to suggest feasible methods of frequency generation suitable for use in a low-cost rural satellite communications systems. Multiple frequency synthesizers presently on the market for SCPC communications systems and for such purposes as frequency hopping in spread spectrum communications tend to be very complex and possess capabilities beyond our needs. However, unless the requirement for closely spaced channels in SCPC systems can be relaxed or waived, the requirement for extreme frequency stability in both the transmitter and receiver will remain. Since the largest frequency uncertainty tends to be in the satellite, there may be no alternative to the pilot carrier system if close spacing is absolutely necessary. However, the ±25 kHz satellite frequency uncertainty is usually considered to be long term (one month or more), so that occasional manual adjustment of receiver frequencies may be sufficient to compensate for frequency drift in the satellite in a thin-route system.

The recent availability on the market of programmable dividers that operate near 1 GHz, plus developments in the last year or so in microwave fundamental frequency oscillators, have important implications for low-cost frequency sources that do not include multipliers or, at least, that use very low multiplication ratios. Figure 7 shows the block diagram of a phaselocked source using a 1 GHz basic transistor oscillator whose output is multiplied by a harmonic generator such as a step recovery

diode to achieve output frequencies in the 6 GHz region. This device could be used for either transmit or receive frequency conversion. The 1 GHz output of the oscillator is divided in the divide-by-64 prescaler, and this output is compared to a crystal harmonic frequency in a phase detector. The output of the phase detector is a varying DC voltage which drives the voltage-tuned device in the oscillator input, thus providing frequency stability comparable to that of the crystal. In the case of stability required for upconverters, the crystal must be enclosed in a temperature-constant oven.

3.3 New Technology

The advent of newer devices and techniques such as the dielectric cavity oscillator and the surface acoustic wave (SAW) oscillator allow fundamental frequency generation at higher microwave frequencies (4 to 7 GHz), but in order to achieve extreme stabilities phaselocking to a crystal in an oven is still required. However, the problem of multiplication of frequency and its attendant noise increase is being mitigated. Bulk devices such as the Gunn diode and IMPATT diode allow fundamental frequency generation well above 10 GHz.

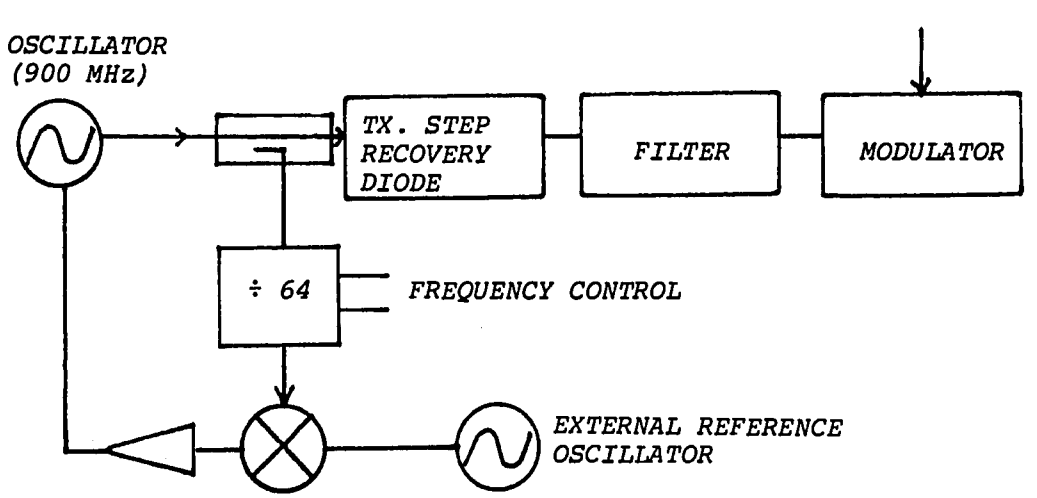

Fig. 7 — A frequency conversion system for transmit upconverter using only one oscillator.

21X

Figure 8 is an example of a special purpose design for a combination upconverter/downconverter that might be used in a thin-route system. The first LO (local oscillator) for each converter is a single dielectric cavity transistor oscillator operating at a fundamental frequency near 5 GHz. Since this device is cavity stabilized only, overall frequency stability of both transmitter and receiver may be no better than one part in 10^6, thus it requires channel spacing wider than standard. This stability can be increased if the 5 GHz source can be phaselocked to a crystal reference, but phaselocking requires additional cost and complexity. The system shown saves the cost of one local oscillator in a double conversion up/downconverter.

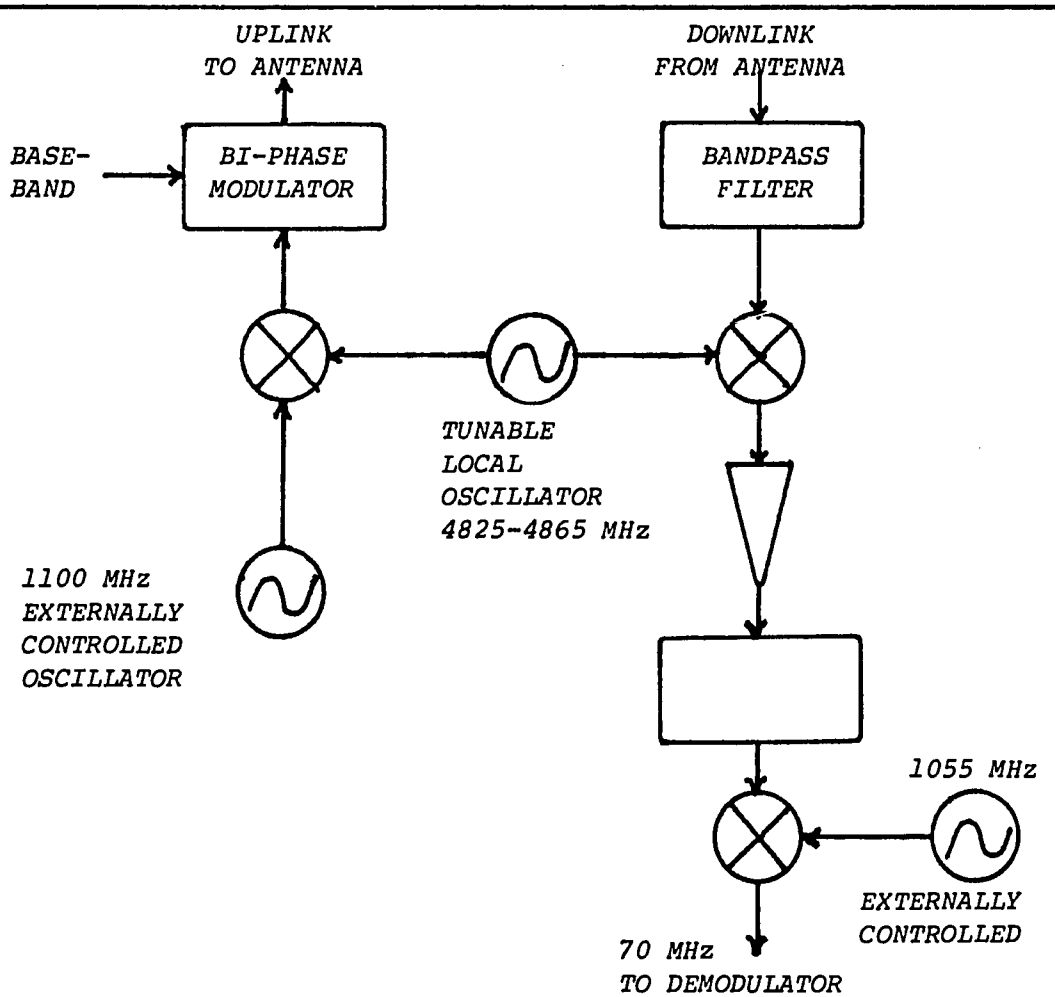

Fig. 8 —— Simple thin-route up/downconverter.

4.0 IMPACT ON SYSTEM PLANNING FOR RURAL COMMUNICATIONS

This report discusses the need for frequency converters, means of implementation, and the various hardware designs. In order to make significant progress in the development of truly low-cost frequency stable converters for thin-route application, some departures from current design planning may be useful. If users can agree on relief from some of the design practices and requirements restrictions as listed below, the way will be open for additional equipment development in the low-cost SCPC field. Areas that should be considered for requirements or design relief are:

- Assign transmit/receive channels in matched pairs, thus permitting the use of a single oscillator for generating both transmit and receiving functions.

- Increase the spacing between channels to reduce the stability requirements for very stable, but easily tuneable, frequency generators.

- Use digital modulation (PSK) directly at 6 GHz to eliminate the need for frequency translation and amplification. Use this for transmissions from the remote stations to a master station.

- Operate both transmitters on the same frequency in a two-way hookup.

Some loss of system flexibi-ity may be experienced in using any or all of these design relaxations. Using a single first oscillator to generate both the transmit and receive functions may restrict the use to one-half of a transponder or to certain transmit-receive combinations. Increasing channel spacing reduces the overall number of channels that can be used, but SCPC systems usually are power-limited rather than band-limited, i.e., we expect to run out of sufficient downlink power

before we have put all the channels in the transponder that will fit in the transponder bandwidth, anyway. Therefore, giving up a certain number of channels because the separation is greater than normal really does not cost us anything. Increasing channel spacing also means that direct frequency generation at 4 and 6 GHz is more feasible, since cavity stabilization may be sufficient and complex phaselocking may not be needed. If pilot tones can be eliminated because of wider channel spacings, this action may also affect receiver designs in that wider bandwidths (and therefore higher noise figures) may be necessary and better AFC designs may have to be used to keep the receiver tuned to the incoming carrier frequency. Digital modulation means that digital receivers and transmitters will have to be included at the Master Station. Finally, simpler up and down converters are possible if the system can operate half-duplex. This means that two stations transmit and receive on the same frequencies, and only one can transmit at a time. This may be acceptable in certain thin-route applications.

Chapter II
DAMA: DEMAND-ASSIGNED MULTIPLE-ACCESS

1.0 INTRODUCTION

Demand-Assigned Multiple-Access (DAMA) can be usefully analogized to a motor pool, a secretarial pool, or some other scheme of reducing costs by pooling resources in order to use them more efficiently. All such pools, including DAMA, assign expensive resources on demand to a particular user needing access to the resources. They all thus reduce the number of the expensive resources needed in the whole system. (In the case of DAMA, the resource thus allocated is radio channels.) The cost that must be paid for DAMA is the controlling hardware.

The controlling hardware used in DAMA implements functions similar to those performed by ordinary telephone switches: new calls are recognized, channels to carry the calls are allocated, the successful operation of the channels is confirmed, the dialed number is sent from the calling station to the called one, and supervisory checks are initiated which include returning the channels to an idle pool when the call is completed.

Often, in AID's applications of satellite technology, the cost of existing DAMA equipment will outweigh the savings it offers. Whether this is true or not, of course, depends on whether the cost of the DAMA equipment at each earth station exceeds the total efficiencies realized on a per-station basis. Further, the appropriate complexity of DAMA in a given application is that which maximizes the difference between savings and cost. When a particular application requires transmission of only light traffic, the cost burden of full DAMA will exceed any possible efficiencies, and less complex alternatives which still pool resources may yield greater savings than the present full-blown DAMA systems.

25.x

2.0 THE NEED FOR DAMA

In a communications satellite system used to carry telephony, each earth station uses one or more radios to transmit one end of a telephone conversation to the satellite and to receive the other end from the satellite. (We use the term "radio" to mean not only a receiver but also a transmitter.) If a telephone subscriber at any one earth station is to be able to talk to a telephone subscriber at any other earth station, the satellite network must be designed so that, between any two earth stations, a linkage of stations that can communicate with each other may be found. As an example, Fig. 9 shows a system using five "small" earth stations, each having one radio tuned to a unique channel, and a "large" station having five radio channels and five radios. None of the five can talk directly to each other because each radio uses a different channel. However, any of the small stations can talk to the large station. If a small station wishes to talk to another small station it must do so by relaying the call to the large station. The large station in turn uses a telephone switch to link one radio to another, thus linking the two small stations. Extending the system architecture of Fig. 1 to a system containing 200 earth stations would require 200 different radio channels; the large master station would require the inclusion of 200 radios. Having only one radio, each small station can carry a maximum of one call. Ordinarily, most of the earth stations in a network so sized would not be carrying a call at any given instant. Hence many of the satellite channels would not be used, and many of the radio units installed at the master station would be idle. If the radios at the master station were tunable, allowing any radio to be tuned as needed to receive the transmissions from a small station, the idle radios could be eliminated. In the same way, the number of channels and frequencies used by the system could be further reduced by making the radios in the small stations tuneable. Two small stations wishing to talk to each other then simply tune their radios to the same channel and proceed with the call. There would be no need to send the

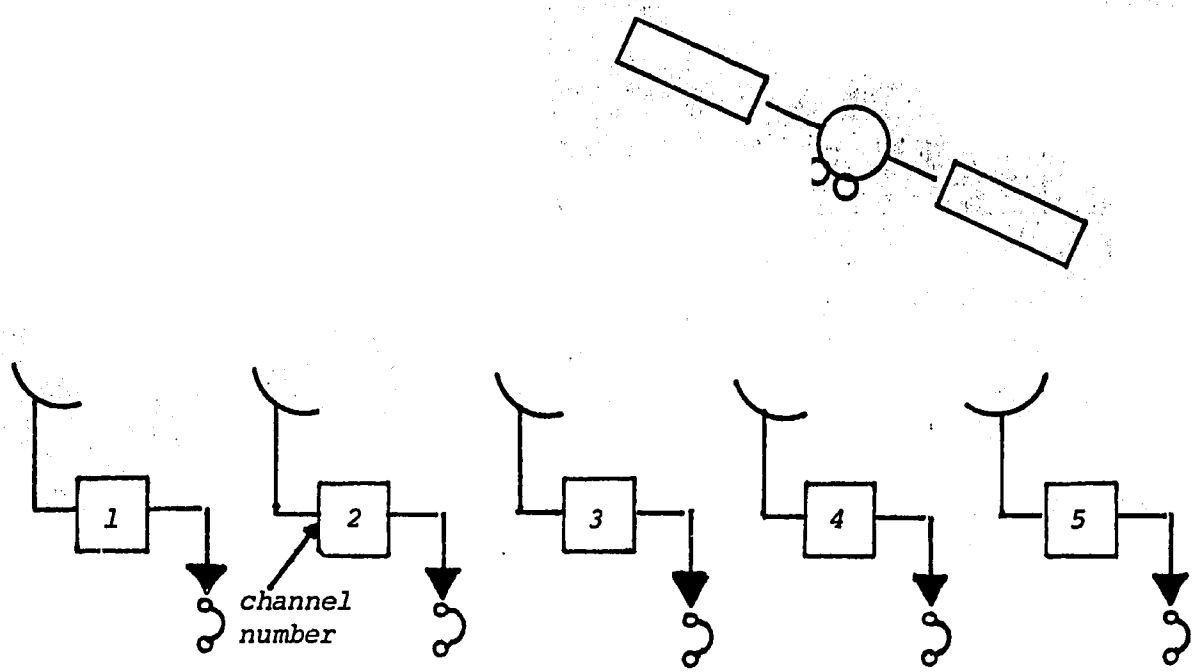

SMALL STATIONS WITH 1 RADIO AND 1 CHANNEL EACH.

9LOW TRAFFIC STATIONS)

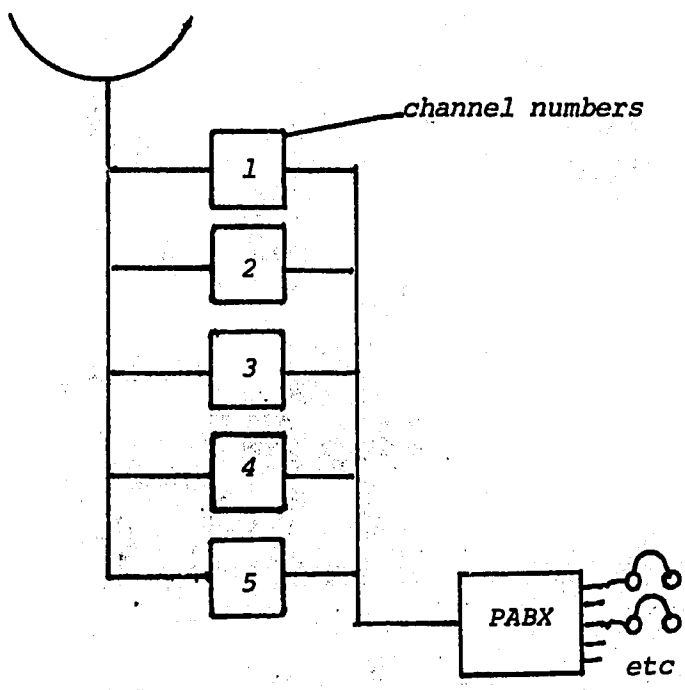

LARGE STATION WITH FIVE RADIOS.

Fig. 9 —— Basic Satellite Configuration Radios and Channel Numbers

27x

conversation first to the large station to be switched and then from the large station to the destination small station. A penalty is paid for this sophistication in channel tuning and control: the penalty is the cost of the equipment needed to do the tuning, to assign channel numbers to calls and keep track of calls in progress. The tuning and control equipment is generally known as demand-assigned multiple-access (DAMA) equipment, and its employment may pay when the savings in satellite channels and radio equipment is great enough. In the following, we discuss the functions and purpose of DAMA using analogies where they aid understanding. Subsequent to the discussion, we review the particular functions of DAMA that might be useful in a rural telephone application such as AID is considering for developing countries.

3.0 DEFINITION OF DAMA

In a communication system used for telephony, the satellite is accessed or used by a number of earth stations. This is the complete content of the phrase "multiple-access."

Demand-assigned multiple-access contrasts with *preassigned* multiple-access. Figure 1 showed a preassigned multiple-access system. The channels are permanently assigned to links between one particular earth station and another particular earth station. A demand-assigned system assigns channels to links not permanently but *on demand*. The available channels are put in a common "idle" pool. Computer logic located at the various earth stations selects channels from the pool as needed for sending a telephone call. Both the efficiencies and the costs of DAMA are analogous to the efficiencies and costs of a motor pool: fewer resources are needed to supply the demand, but there is an overhead in the coordination necessary to secure the resources when they are required. Generally, a DAMA system is justified by the same economic reasoning that justifies a motor pool: *it cuts the cost of providing a given level of service*. (The logic and control required to implement DAMA may also allow improved service to be provided; DAMA may thus be bought to give an increased level of service or to provide for future expansion.)

If cost savings cannot be achieved, DAMA should not be used. In any case, the sophistication of the DAMA should be that which gives the greatest cost saving.

4.0 REVIEW OF KEY CONCEPTS IN DAMA THROUGH SCENARIOS

The major purpose of DAMA is enabling fewer resources (satellite channels and radio units at the earth stations) to do a given job. This more intensive resource use is possible because the statistical averaging gained through demand assignment of resources from a common pool allows those resources to be used more efficiently. This consequence of statistical averaging is a familiar principle; one example was given above in the form of the motor pool.

The utilization of pay telephone booths provides another example for communicating. Single "street corner" pay telephone booths are seldom in use. Nevertheless, it is common to wait some time for a telephone booth when one must make a call. In contrast, at Dulles Airport, though the banks of telephones experience very heavy use, one must wait a short period at most before a telephone becomes available. The improved efficiency is gained when one aggregates a random demand to supply service rather than dividing the demand into small separate groups for the purpose of serving the demand. DAMA does this aggregation of random traffic (call demand) to get savings in the number of facilities required.

The resources that DAMA can save are the number of radios in the earth stations and the number of satellite channels needed to meet a given volume of communications. For accuracy in further discussion, the latter category must be broken down into two subcategories: the channels used to actually send communications over the satellite use channel space (different frequencies can be used to send different satellite channels and these frequencies must be separated by the bandwidth of each channel), and the satellite power required to fill the channel space. Both of these resources, channel space and satellite power, must be used together to create a satellite channel useful for sending a telephone call.

DAMA functions not by reducing the telephone call volume but by using channel space more effectively in carrying that call volume. Consequently, DAMA does not save on the amount of satellite power needed

to carry calls because the number of calls is constant. DAMA does, however, save on the number of radios and the channel space needed.* Thus, we can conclude that DAMA is useful if the cost of the DAMA system is more than offset by the savings resulting in the increased efficiency of utilization of radios and channel space.

In the AID type of applications, generally speaking, channel space is excessively available as compared to satellite power because AID is planning to use small aperture earth stations. Having a lot more channel space than satellite power to fill the space does one no good because the excess channel spaces can never be used to carry telephone conversations: there is no power to fill them. They are like automobiles without gasoline. Because the AID application calls for the use of small earth terminals, the satellite system will ordinarily have excess channel spaces, and the DAMA can be justified only if the savings in radios is large or if the system without DAMA would use a great quantity of excess channel spaces. Consequently, the main DAMA emphasis must be on saving radios and on avoiding an inordinate waste of channel space.

---

* To a very limited degree, DAMA does save on the satellite power whenever it reduces the number of "double hops" used to carry a call. In Fig. 1, when one of the small earth stations wishes to talk to another it must use satellite power to get the signal to the larger station and then use additional power to get the signal back to the smaller station. However, much less power is required to get the signal to the large earth station than to a small station. Thus, there is not much difference in satellite power utilization between a double-hopped system and a single-hop system which DAMA sometimes makes possible. In any case, we assume that few calls will connect one small station to another.

3/x

5.0 DAMA FUNCTIONS

The functions that must be performed by a DAMA system are analogous to those performed in a telephone system. To provide a linkage between two customers, a telephone system must perform several functions. In a very primitive telephone system, we might imagine that all of the few subscribers have separate telephones and telephone lines connecting them to all of the other subscribers. Thus, if the telephone system has ten subscribers, we might imagine that each subscriber has nine telephones on his desk (one telephone to reach each of the other subscribers). This is a very inefficient use of telephones, telephone lines, and desk space. The present telephone system assigns lines and switching capacity to telephone calls on demand. When you pick up your telephone and hear a dial tone, this tells you that the telephone line between you and the office PABX* is working. You then dial a "9" for an outside line. You thus signal the office PABX that you need to call outside the office. If the lines are all busy the PABX sends a distinctive busy tone. If a line is available, the local PABX finds it and you are then connected to the telephone company. You will get a second dial tone confirming that the line between you and the telephone company is functioning. You can then dial the number you wish, and the telephone company equipment absorbs the dialed information, finds what it must do to complete the connection, and completes the connection. The ringing tone you get tells you that the circuit is working.

A DAMA system must perform the above functions automatically. In sum, to work efficiently, the DAMA system must perform the following functions:

1) It must recognize that a new call is being made from a station and determine from the dialed number which station should receive the call.

2) It must be able to locate an unused channel in the set of satellite channels assigned to the service.

3) It must arrange for both originating and receiving stations to adjust their radios to the desired channel.

---

* PABX refers to the telephone switching equipment located in your building.

4) It must confirm a successful linking of the stations.

5) It must provide the proper signaling intelligence to interpret dialed signals at the originating station and to pass on the number from the called station to the local telephone system at the called station.

6) It must clear the system at the end of the call, returning channels in the satellite to the idle pool to be ready for new calls.

7) It must record the information necessary for billing the calls.

8) It must provide operational checks for maintenance.

The sophistication with which each of these functions is performed may vary widely. Indeed, each of these functions is performed in a primitive fashion even in a preassigned satellite system, or in the primitive system referred to above. *The central problem in designing a DAMA system is to specify a way in which these functions will be performed that is both cheap and sufficiently flexible that it meets present needs and any future needs that may reasonably be expected to soon arise.* The way in which each of these functions is performed depends upon the nature of the satellite communication system being considered. For example, if we are examining a rural telephone system in which essentially all calls from the small stations arrive at some capital city, the function that determines where the call should go from the rural stations is very simple: all calls will go to the capital city. In contrast, we may consider a system which links, say, a large number of uniform cities or towns. In this case, a call from one station can go anywhere and the routing algorithm is more complex. For AID's purposes, we believe that the functions listed can be performed relatively inexpensively.

33x

6.0 TYPICAL SATELLITE SYSTEMS FOR AID TO CONSIDER

We now examine DAMA for AID satellite systems specifically, considering some examples to see what can be done in specific situations. We consider three examples. The first two of these examples are "star configurations," i.e., a central station receives traffic from a multiplicity of outlying stations. A star network is diagrammed in Figure 10. This configuration arises when the remote stations are providing service to provincial towns or to sites in which relatively important factories or agricultural centers are located. Traffic from such sites typically would home on a nearby large city or market, which would often be the capital city of the country.

The first configuration aims at "basic communications." We assume that 20 stations are located around a central master station, and that each of the 20 stations carries an amount of traffic such that one is the average number of telephone circuits in use during the busiest time of the day. (In technical jargon this is called one Erlang of traffic.) The second example is also a star network: 100 earth stations provide limited coordination or emergency communication service. We assume that the traffic out of each of the 100 earth stations is such that, on the average, a telephone circuit is busy only 10% of the time, i.e., we assume that the traffic out of each station is 0.1 Erlang. Such a network might be installed to both relay radio, or perhaps television programming, to important towns and villages and to provide a limited two-way link from those towns and villages for essential communications.

The third example considered supposes 20 earth stations, all of which are equally likely to talk to each other, exist. Each station carries a total of 5 Erlangs of traffic. This example represents a telephone network connecting 20 modest-sized urban areas. (We do not anticipate that AID would be involved in the provision of such a system, but we include this as an example to contrast the above two.)

At this point we warn that the conclusions we reach in these examples are dictated by the examples themselves. One could object that, by excluding direct small-station-to-small-station traffic from

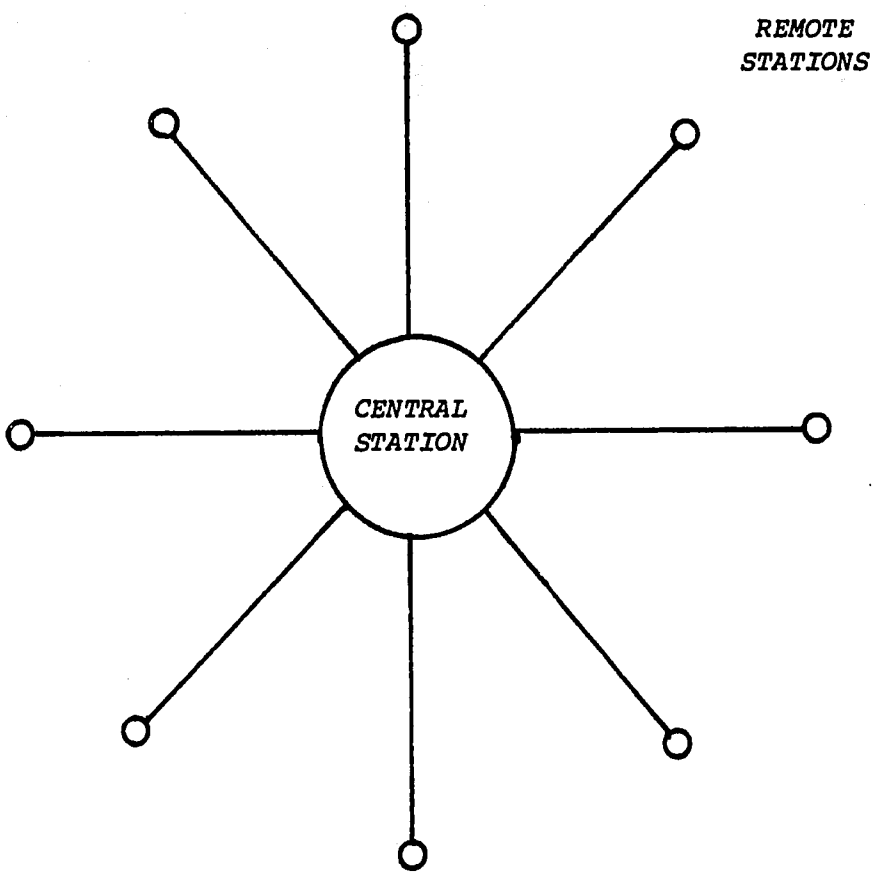

Fig. 10 —— Star configuration

35x

consideration, we have biased the case against sophisticated DAMA systems and are doing developing countries a disservice by locking them out of satellite technology which could form the basis of a later more modern telephone oriented system. Certainly AID must carefully consider the purpose of the satellite system which they might sponsor. However, there is little point in building expensive systems now to meet hypothetical needs particularly when such a stance towards future possibilities may well foreclose building at all because of the costs.

7.0 REQUIREMENTS OF THE EXAMPLE SYSTEMS: DAMA vs. NO DAMA

Table 1 shows, for each example system, the number of radios, satellite channel spaces, and amount of satellite power needed. In each example, three cases are described: (1) all links are pre-assigned (no DAMA), (2) DAMA is used to assign all radio channels, and (3) a customized approach (defined in the following section) is used.

As is apparent in Table 1, DAMA reduces the number of radios and channel spaces needed in the system substantially. (This reduction is what justifies DAMA.) In example 1, the DAMA system saves 36 radios (120 radios without DAMA as compared to 84 with DAMA) and 36 radio channels (60 without DAMA as compared to 24 with DAMA). The primary benefit of DAMA in this example is that the number of radios needed is reduced. (The reduction in channel spaces does not save much because the channel spaces are relatively costless; most of the satellite lease charge will be for channels of satellite power actually used.) The balancing expense, of course, is the cost of installing DAMA in each of the 20 earth stations. We expect that for this example it will cost less to install the additional radios than to install DAMA. However, even more attractive is an alternate approach (discussed in Section 8.0) which reduces the number of radios required even more than DAMA.

The savings achieved in example 2 with DAMA are, on a percentage basis, greater than those in example 1. The calculation of cost advantage due to DAMA weighs the savings of 86 radios against the installation of DAMA at each of the 100 remote earth stations. Once again, buying the extra radios is probably the best choice. However, a less than full-scale DAMA (discussed in Section 8.0) allows the major part of the savings to be achieved at a relatively lower cost.

In example 3, the percentage savings allowed by DAMA are not as dramatic as they were in the previous two examples. However, the savings *per earth station* are substantial because the absolute numbers of radios that can be saved by using DAMA is large and the number of stations is relatively small. Also, in this case only, the reduction in the number of satellite channel spaces needed is a real benefit. In this example, as

opposed to the preceding examples, the normal satellite system design will employ 6- to 10-meter antennas rather than smaller aperture diameters. These larger antennas are substantially more sensitive, and less satellite power is required to fill a satellite channel space than is required with a smaller antenna. Generally, enough power will now be available in the satellite to fill every available space because less is needed for each space. Thus, the non-DAMA approach for example 3, by preempting channel spaces, reduces the available satellite capacity whether or not it also preempts the power to fill those spaces. In this example, DAMA both saves radios and increases satellite capacity. Example 3 represents the systems for which full DAMA has been designed by most satellite system manufacturers and should be installed to save money.

Table 1: EXAMPLE SYSTEMS

Example 1. 20 remote stations & one control station
Traffic follows a star configuration, and
totals 1 Erlang at each remote station.

Radio & Capacity Needs	No DAMA (preassigned)	Full DAMA	Customized System
Radios needed at each Remote site	3	3	2
at Central site	60	24	40
TOTAL	120	84	80
Channel spaces needed	60	24	40
Channels of satellite power actually used	24	24	24

Example 2. 100 Remote stations & one control station
Traffic follows a star configuration and
totals o.1 Erlang at each remote station.

Radio & Capacity Needs	No DAMA	Full DAMA	Customized System
Radios needed at each Remote site	1	1	1
at Central site	100	14	20
TOTAL	200	114	120
Channel spaces needed	100	14	20
Channels of satellite power actually used	14	14	14

39x

TABLE 1 (cont'd)

Example 3. 20 stations total. Traffic is uniformly distributed and totals 200 Erlangs, or 20 Erlangs per station.

Radio & Capacity Needs	No DAMA	Full DAMA	Customized System
Radios needed at each site	76	25	25
TOTAL	1520	500	500
Channel spaces needed	760	242	242
Channels of satellite power actually used	242	242	242

8.0 CUSTOM DESIGN RECOMMENDATIONS FOR EXAMPLES 1 AND 2

In example 1, DAMA achieves savings by using radios more efficiently. A standard feature used in business telephone systems, "Trunk Call-back," can also achieve these savings for example 1. Though trunk call-back is a feature provided by a business PABX, it is clearly illustrated through a manual example: push-button telephones. A small office having sufficient traffic to justify only three telephone lines will ordinarily supply each desk with a telephone having several buttons on the telephone. When any line is in use, the corresponding button on the telephone will be illuminated. Thus, if a person wishes to place a call and all channels are busy, the person sees by glancing at the telephone that the call must be delayed. As soon as a line becomes available, the corresponding line button will no longer be illuminated, and the individual desiring to place a call pushes the proper button to select that line. The call is then placed. This manual method, by queuing the call demand, allows the outgoing lines to be used with very high efficiency. Modern business PABXs do the same thing electronically: a user desiring to place a call lifts the handset, hears the dial tone and dials the number. If the PABX cannot obtain a free line out of the office, it sends a special signal. The user then hangs up knowing that the switch will dial the user back when a line becomes available. At this time, the switch may forward the call automatically, or the user may be required to re-dial. (A less sophisticated feature, called a trunk camp-on, is available on electronic key systems and performs a similar function.)

The per-station traffic in example 1, one Erlang, is sufficiently high that a small electronic key system might be provided at each earth station. Alternatively, if there are substantially fewer than 15 telephones, five-button telephone handsets could be provided allowing the users to do the queuing function manually. Call queuing will substantially improve the efficiency of utilization of the frequencies and will allow each earth station to use two channels rather than three. This will reduce the number of radios needed at the remote stations and at the central station and will, as well, reduce the number of satellite frequencies required. The consequence of using trunk call-back is that the number of radios required is actually less than is required with DAMA.

Our proposal for example 2 is more complex. In example 2, we propose two different techniques to improve the efficiency of utilization. One technique is used in the outbound direction (i.e., in the direction from the central earth station to the remote earth stations). A second technique is used in the inbound or reverse direction.

In the outbound direction, transmitting all of the channels going to the remote earth stations in one digital time-division-multiplexed bit stream permits each remote station to be addressed when a call is coming to it. By using multiplexing, the DAMA functions of tuning, etc., are replaced with the simpler functions required to implement a multiplexing system.

In the reverse direction, radios that can be tuned must be used to achieve the savings of DAMA. By having the central station periodically transmit to all of the remote stations a list of which frequencies are currently free, a primitive DAMA can be implemented. A remote station wishing to transmit a call tunes to one of the free frequencies and transmits a single radio tone. After the carrier has been sent for one second, the remote station modulates the carrier using a 600 bits/second modem. (This is available on a single integrated circuit chip.) The remote earth station transmits its identification code using this modem for about one second. They then fall silent. The central station receives the code and subsequently informs all earth stations that the frequency is no longer available. It commands the remote station, which has sent its identification code, to prepare to receive a call. The central earth station sends a dial tone to the remote earth station, and the call proceeds on the chosen frequency as in normal pre-assigned satellite system telephony.

If two remote earth stations attempt to use an idle frequency at the same time, the central earth station will fail to correctly receive the code of either of the two remote earth stations, and so the central earth station ignores the call attempts. Both remote earth stations will receive nothing from the central earth station, and the

users, failing to get a dial tone, will hang up and try again.* In theory, this system behaves like a full DAMA system, and only 14 radios need to be provided. We are suggesting that 20 be provided, however, so that s significant excess of radios over traffic will exist. Thus, the probability of two stations attempting to use the same frequency simultaneously is low.

In order to make this proposed system work some hardware and software development is needed. However, the complexity of the hardware and software development is relatively low, and we estimate that the DAMA job could be done for perhaps $100,000. This amounts to $1,000 per earth station, and thus would not be justified if the design had to be done on a custom basis for each such system. If more than one such system were sold, however, the net savings in the number of radio units and the minor savings in the use of channel spaces would pay for the development.

---

* Some mechanism must be provided for preventing call-attempts from overloading the system. A number of options are available, but the simplest is having each remote station send a special busy signal to the user after three call attempts are made in a one-minute interval.

9.0 CONCLUSIONS

We have described the purpose and functions of DAMA systems and illustrated the effects of the use of DAMA on system design through three examples. The key concept of DAMA is that it can reduce system costs by aggregating the resources into a single pool and allocating them on demand. The tradeoff in cost is between the electronics needed to do DAMA and the savings obtained in radio and satellite costs.

In our opinion, if the group of earth stations being considered for an AIDSAT application is less than about five and the number of channels is about the same, then there is no point in considering DAMA. If the stations are to be part of a larger network, this conclusion could change. The examples given previously point out roughly the savings in radio and satellite costs. We have not considered the offsetting expenses of using DAMA, because the costs are quite variable and the industry is in a state of flux. The custom-designed recommendation in Section 8.0 pointed out how there are imaginative solutions to specific communications problems that should not be overlooked by blind adherance to the conventional wisdom of the communications establishment.