PD HAD 449

(DS 084)

BEST AVAILABLE DOCUMENT

FILE

TUNISIA RENEWABLE ENERGY PROJECT

FINAL REPORT

(Contract AID/DSAN C - 0059)

March 13, 1979

by

Dr. Morton Gorden
Mr. William Schaffer
Dr. James D. Westfield

Submitted to:

Mr. Alan Jacobs, Director
Office of Energy
United States Agency for International Development
Washington, DC

DEVELOPMENT SCIENCES INC.

FOREWORD

In October of 1978 a two-man energy team from AID visited Tunisia for approximately three weeks. The team Scope of Work included review of pertinent energy and economic development plans, examination of energy institutions and institutional development, discussion of these subjects with AID, Tunisian government and private sector representatives, and recommendations to USAID Tunis, the Tunisian government, and Washington USAID of activities that will, within budgetary limitations, support the advancement of renewable and fossil resource energy for national development. A report summarizing the findings and prepared particularly for USAID personnel familiar with Tunisia was submitted in October of 1978.

As a result of this report, a DSI team including the two original members with skills in institutional/economic analysis and energy technology evaluation and a new member with experience in training was sent to Tunisia to follow up on the original visit. The Scope of Work for this team required them to define and describe specific projects worthy of both countries' mutual involvement and funding. This report summarizes the team work performed and project recommendations arrived at during a two-week visit to Tunisia in February 1979.

This report recommends three subprojects and reflects the analysis and judgements of the team, USAID personnel and Tunisian government representatives. While it is a document written by DSI team members and solely their responsibility, the project concepts grew out of and benefited from the dedicated work of many other individuals whose contributions are gratefully acknowledged.

The individual subprojects are described in sufficient detail to allow considerations of their funding by AID. If they are accepted, the first step in their implementation will require a detailed design phase. This design phase will involve AID, consultants/contractors and the Tunisian government. The purpose will be to refine the projects and optimize the results toward the goal of providing energy for self sustaining economic and social development.

BEST AVAILABLE DOCUMENT

TABLE OF CONTENTS

	Page
I. SUMMARY AND RECOMMENDATIONS	
A. Introduction: Defining a "Mature" Relationship	1
B. Project and Subproject Summaries	4
C. Recommendations	7
II. PROJECT DESCRIPTION	8
A. Subproject 1. Agricultural Applications	8
1. General Objectives and Expectations	8
2. The Site for Applications	9
3. Technology/Function Summary	14
4. Training	43
5. Evaluation	43
6. Costs of Applications	45
7. Benefits Analysis	50
B. Subproject 2 - Energy from Municipal Waste	54
1. General Objectives and Expectations	54
2. The Subject of the Analysis	54
3. Subproject Function Summary	55
4. Evaluation	56
5. Costs of the Subproject	56
C. Training in Alternative Energy Applications	58
1. Background	58
2. Needs Analysis	58
3. Training Courses	59
4. Evaluation	61
5. Desalinization	61
6. Fellowships	62
D. Relations Among Subprojects	65
1. The Value of Integration	65
2. Costs Summary	66
III. IMPLEMENTATION	68

BEST AVAILABLE DOCUMENT

LIST OF TABLES

		Page
Table I	Planned Technology Applications and Uses in Hasse El Frid	15
Table II	Solar Radiation at Kairouan	18
Table III	Traditional Supplemental Irrigation Water Requirements	21
Table IV	Summary of Site Specific Design Criteria and Description of Major System Components	24
Table V	A Comparison of Theoretical Efficiency of Various Irrigation Systems	28
Table VI	Drip Irrigation System Layout Per Hectare	29
Table VII	Estimated Electricity Use Factors for Priority Public Uses in Hasse El Frid	36
Table VIII	Estimated Minimum Electricity Demands from Priority Commercial Uses	39
Table IX	Major Assumptions for Cost Estimating	46
Table X	Estimated Major Subproject Costs	47
Table XI	Cost Estimate for Energy from Municipal Waste Subproject	57
Table XII	Cost Estimate for Training	63
Table XIII	Project Implementation Schedule	70

LIST OF MAPS

Map 1	Hasse El Frid Orientation Map	10
Map 2	Relationship of Hasse El Frid to Nearby Towns	11

BEST AVAILABLE DOCUMENT

LIST OF FIGURES

		Page
Figure 1	General Location Map of Village of Hasse El Frid	16
Figure 2	1977 Solar Energy Measured at Kairouan in Langleys	17
Figure 3	Frequence de Vent - Kairouan	19
Figure 4	Schematic Representation of Major Components of the Wind Driven Mechanical Well Pumping System for Forage and Wheat Irrigation	22
Figure 5	Schematic Representation of Major Components of the Wind Powered Electrification System	25
Figure 6	Schematic Representation of Major Components of the Photovoltaic Powered Drip Irrigation System	27
Figure 7	Schematic Representation of Major Components of Photovoltaic Electrification for Farms	32
Figure 8	Schematic Representation of Major Components of System Containing Wind Powered Irrigation and a Greenhouse for Winter Vegetable Cultivation with Supplemental Nighttime Heating by a Solar Hot Air System	34
Figure 9	Schematic Representation of Major Components of Photovoltaic Electrification for Priority Public Uses in Village	37
Figure 10	Schematic Representation of Major Components of Photovoltaic Electrification for Priority Commercial Uses	40
Figure 11	Schematic Representation of Major Components of Photovoltaic Electricity System for Household Uses	42

BEST AVAILABLE DOCUMENT

I. SUMMARY AND RECOMMENDATIONS

A. Introduction: Defining a "Mature" Relationship

Relations between Tunisia and the United States are now passing into a new phase that has been characterized as a "mature" relationship. During the recent years of economic success that have elevated Tunisia into the category of middle-income nations, the percent of the population that falls below the absolute poverty line has decreased from 30 percent to 16 percent. The per capita income now exceeds $800.[1] Under these conditions, AID programs oriented toward human needs require a redefinition. Such a redefinition, of course, does not overlook the continued existence of poverty in the declining fraction of the population, but it takes account of the fact that the path of development is being well travelled, and begins to turn attention to alleviate threats that could reverse the successful course.

Tunisia is not alone in this category of nations. It is joined, for example, by Korea and others in whom the United States has a long-term interest but with whom the AID relationship based on human needs requires examination.

Among the characacteristics of a "mature" relationship is that it is predicated on self sufficiency, mutual benefits, and an orientation toward future developments of importance to both nations. In terms of self sufficiency, Tunisia clearly entered into the international status of a desired trading partner with improving credit and balance of trade features.[2] The maturity of the economic relationship of Tunisia and the United States is reflected in increasing interest in private sector investments by American firms. This report is not, however, about general relationships with Tunisia. It is concerned with the role energy plays in maintaining good relations, anticipating problems that might disturb the successful path that Tunisia currently follows.

The improvement in world commodity prices in 1973-74, especially in petroleum exports, greatly assisted Tunisia to improve her self sufficiency by paying for refined petroleum imports and literally fueling her economic growth. However, the results of recent energy planning efforts indicate that by 1990, current known reserves will not meet domestic needs and Tunisia will join the group of nations dependent on imported fossil fuels.[3]

---

1. For an overview of basic statistics especially relevant to Agricultural Economic Development see: "Agribusiness Council, Inc., September 1978. This work is based on analysis by Herbert Steiner, USDA.

2. For analysis of the Tunisian economy, limited official access is granted for: Tunisia Economic Position and Prospects of Tunisia, Review of the Fifth Development Plan, 1977-1981. World Bank Report No. 1539-TUN, May 2, 1977.

3. Ministry of Industry, Mines and Energy, Republic of Tunisia "Apercu Sur La Strategie De L'Energie De La Tunisie." (See Appendix C).

BEST AVAILABLE COPY

61

BEST AVAILABLE DOCUMENT

The diesel and electric pumps being financed today, will, before their amortization period is finished, have to run on imported fuels that are not offset by petroleum exports. Surely, Tunisian exports in other sectors can be used to offset these imports, but whether imports will be sufficiently available to middle-income countries bidding against developed countries provides intolerable uncertainties. The mature relationship should hope to diminish those uncertainties.

To this end, the AID Energy Office is designing programs and projects that assist energy managers in developing countries to meet their energy needs for economic development. In the particular case of Tunisia, these needs have some specific parameters set by the energy ministry itself. M. Boussoffara, Chef du Cabinet of the Ministry of Energy, has articulated a goal to meet 10 percent of national needs in 2020 by renewable energy sources. This goal is currently being examined in an energy modelling effort soon to be under contract.[4] Current projections indicate that by 2020 the equivalent of present consumption of fossil fuels will have to be entirely replaced by renewable sources.

The problem facing Tunisian energy managers is to determine where and when renewable sources can be introduced into economic development programs. The AID Energy Program outlined below is designed to assist in making those choices by 1) demonstrating, in the agricultural sector, which currently provides the best target for a human needs orientation, where new energy technologies can be applied to increase productivity without increasing dependence on fossil fuels; 2) illustrating methodologies for industrial and commercial waste utilization which provide alternatives for energy from waste recovery; and 3) providing a management training program for high-level decision makers and their senior staff to determine the timely introduction of new forms of energy.

Such a program fits well into the definition of a mature relationship for it is oriented toward assisting Tunisia to improve energy self sufficiency and to reduce the pressure it brings to the remaining fossil fuel stocks of the world. The renewable technologies and the skills needed for their introduction will remain long after the project period and will continue to assist the Tunisians to help themselves. Furthermore, the concept of one of the projects, combining drip irrigation with a photovoltaic source, has been well developed in Tunisia and may eventually represent a transfer of knowledge from Tunisia to the United States. Thus, the mutual aspects of the program design fit well into the redefinition of the relationship.

---

4. The Ministry of Industry, Mines and Energy has compiled a comprehensive set of statistics on Energy Production and Consumption by sector. Their energy assessment data are voluminous and with the addition of this modelling effort, they will have a full capacity for analysis. Enterprise Tunisienne d'Activites Petrolieres (ETAP), the Ministry's Office for Studies, will develop the new model.

The following program is also timely, for if significant amounts of substitute energy forms are to be in place by 1990, orders will have to be placed in the mid-1980s. If those decisions are to be informed by familiarity with renewable energies, projects must begin now to pass through the design, construction, operation, and evaluation phases.

The information concerning application of alternative energy sources and technologies is critical. Because of their high cost relative to traditional sources, it is likely that a diminished level of supply (less electricity) will have to be provided until the economics of solar and wind sources become more favorable. For example, currently there is very little information on how to design solar and wind energy supply systems for rural villages. There are no established 'rules of thumb' or proven design criteria to be used to size the solar panels, windmills, or battery storage systems. Thus, the wide variety of applications of solar and wind technologies suggested for a village in this report will develop design data and help establish how much and for what period of time electricity and energy is needed in rural agricultural settings. The development of this type of data is very important to set the direction for the future of solar and wind uses.

The recommended program is fundamentally designed to provide timely information on a broad range of technologies and applications in order to assist the Tunisian Government to make informed decisions regarding where, how and when alternative energy sources can be applied.

BEST AVAILABLE DOCUMENT

B. Project and Subproject Summaries

The overall project has as its objective providing assistance to Tunisian decision makers in determining where, when, and how renewable energy can be applied in the future. The scope of the project is, however, limited to selected areas of the economy rather than to overall national energy consumption. The human needs orientation has focussed attention on the agricultural sector in Subproject 1 (Agricultural Application), and within that, a rural village now being targeted for future development. Some breadth of knowledge will be gained from that limited sector because the project will show that the general functions of heating, lighting and pumping can be carried out by renewable energy. By extension, but with important caveats for capacity and costs, other applications can be previewed.

Subproject 1, Agricultural Application of Renewable Energy, consists of eight technologies for four major functions. The first function envisages the research and demonstration of photovoltaic pumping combined with drip irrigation to obtain more rapid growth of young fruit trees in a semi-arid region. The purpose is to provide the most efficient use of the scarce water resource, while at the same time adding the benefits of controlled irrigation to arboriculture. In Tunisia there are several possible fruit-bearing trees to which these technologies may be applied: orange, tangerine, lemon, apricot, fig, date, plum, peach and pear trees. While drip irrigation may save some ten percent of the water which would be used in normal surface irrigation when applied to mature fruit trees, savings may surpass sixty percent when used with seedlings and young trees, due to the reduced diameter of root area to be reached. Photovoltaic pumping is, at today's prices, most economic for micro systems or where several functions in addition to pumping are contemplated. Since drip irrigation uses far less water than normal open trench irrigation, the characteristics of the two combined are highly complementary.

The design of the total system provides for an equilibrium to be maintained between the rate of evapotranspiration caused by solar radiation and other processes and the rate of supply of water through the system.

This is possible due to the fact that the rate of evapotranspiration and the amount of energy delivered by the photovoltaic panels both depend on the amount of solar radiation. Experimental work on a system utilizing such an equilibrium has been performed by Dr. S. Amami, Director of the Centre du Genie Rural. A copy of his paper entitled, "L'Automatisation de l'Irrigation par la Combinaison du Pompage Solaire et du Systeme Goutte a Goutte" is attached to this report as Appendix D.

The second function uses well developed solar thermal technology in conjunction with a passive solar greenhouse so as to permit both greatly increased crop yields and a shift in growing seasons. The crop planned for the demonstration project is tomatoes. The income benefits to the farmer are substantial, due to increased yields and higher prices which prevail in the off-season. An additional benefit may come from the furnishing of tomatoes to the canning industry; at present the tomato canning factory near El Kef

works only during the summer months, when crops are harvested.

At present the use of greenhouses in Tunisia is limited since there is no means of storing heat during the day for release at night. In the project, several greenhouses would be equipped with solar thermal hot air collectors which would transfer heat to a storage system, using natural convection currents. During the night this heat would be released. The system is designed so that the temperature will not fall below 4°C, the minimum allowable for tomatoes.

The third function is designed to pump water to be used in traditional irrigating practices, but not with fossil energy sources. Several pumping operations will be carried out with the use of wind and photovoltaics. The function will thus create familiarity with important future technologies. While wind had been used before diesel pumps were introduced, its reintroduction with storage systems to provide light and power, puts wind in the modern category. Photovoltaics, though not economically competetive at this time for larger uses, should eventually be affordable and its introduction now is necessary so that the test period can be accomplished before real needs are felt.

The fourth function provides lighting to homes, institutions and businesses, as well as heating to an infirmary. It recognizes that the desire to stop migration to the cities and to concentrate people in villages in central Tunisia has resulted in a need for rural electrification to make village life more attractive. Our Tunisian colleagues noted that they could not expect increased yields through solar energy applications to agriculture if the peasants were leaving the country to go to Tunis. The design of Subproject 1 uses photovoltaic sources for light in village homes, stores, workshops, school and infirmary. Solar collectors will be used for space heating in the infirmary, where severe cold has hampered patient care.

It will not be feasible to provide each home with much lighting; only 150 watts per house is planned. It should be noted, however, that even in areas presently served by the electric grid, few rural homes have any electric lighting at all. Electricity generally is used for agricultural and commercial purposes only, in the smaller villages.

These four functions provide a breadth of experience that will give concrete expression to the planning of a renewable energy future. The variety of functions and technologies should provide information for extensive application. AID will be responsible for early introduction of technologies that can have later and substantial impact.

Subproject 2, Energy from Waste Utilization, is designed to inform analysts of the methods used to determine the energy value in wastes and how to exploit them as sources of steam or other forms of energy. In particular, the industrial and commercial wastes of the District of Tunis will be used as an illustration of how these sources of energy can be exploited. Municipal household wastes are now being examined by the District for use as compost

and the two studies can be coordinated. From this effort, trade-off analysis among competing uses of wastes will be illustrated and the capacity to generalize to other wastes will be developed.

Subproject 3, Training in Alternative Energy Applications, is designed to assist major consumers of energy, especially in the government sector, to determine where and when to introduce solar energy into the country. While the actions to be taken in the light of uncertainties of reserves and abilities to offset rising petroleum costs are a matter of national risk assessment and the exclusive province of the Tunisians, the technology characteristics and the issues surrounding the introduction of technologies can be presented in an objective international setting. The training program outlined below aims at three different audiences in three different programs so that pertinent information can be transferred.

One audience, the high-level bureaucrats who manage energy production or who are responsible for high levels of consumption, will be addressed in an intensive and convenient format. Another audience, their immediate subordinates, who prepare information for decision making will be offered a somewhat longer course so they may carry out their duties at the technical level. A last audience of highly specialized experts will be offered advanced training in the United States.

All audiences will be offered an opportunity to participate at some point in Subproject 1, Agricultural Applications, so that they can achieve some practical exposure to the issues discussed. Of course, they have daily experience with their own planners and the management training will be sensitive to the existing system for making energy decisions.

The renewable training is not the only training associated with the project. Subproject 1 includes training for site personnel at a much lower operational level, but its budget and design are separated from the management audiences.

Combining the credibility of the technology which should emerge from Subproject 1 with the direct training from Subprojects 2 and 3, AID can expect that a relatively small effort will provide multiplying results. The reality of the need will be forced on the Tunisians as it has been forced on the American consciousness. At the time when action must be taken, informed positions on an array of alternatives will be ready.

C. Recommendations

Based on the assumptions that the mature relationship between the two countries is well served by working together in the energy sector, and on the need for both practical working experience with renewable energy technologies as well as information for decision making, the energy team recommends support for the programs discussed in detail in the next section.

The funding recommendation is at the level of $948,000. The Science and Technology effort in Tunisia traditionally has funded its program from grant funds. Since the technology provided is above the prices Tunisians can be expected to pay some years from now when they would make an ordinary market decision, it is expected that this S&T program also would be funded by grants. At the same time Tunisians will pay for those portions of the project that are recuperable through increased productivity such as wells. Since the training effort is clearly in the mutual interests of countries using limited world fossil reserves, grants are to be considered as the financing means. Some of the information in applying photovoltaics to drip irrigation is new for Americans and thus the information transfer coming in the donor's direction should also be taken into consideration.

Due to the budget cycle of the Tunisian government and to the phasing down of AID assistance anticipated, there is an unusual need for a rapid decision process. The Tunisians will need to put a provision in their budget by June 1979 if their funds are to be set aside for the start of the American fiscal year in October of 1979. It is necessary to meet this timetable. Also, since the results of this effort will not be convincingly demonstrated before at least two years, it will be 1983 before the impact will be felt on decision makers. This is not too early to start the thinking process for by that time other nonrenewable energy technologies will be under consideration for purchase to meet the growing Tunisian energy demand.

Both the amount of money and the timing of the money are designed for maximum impact. While the substantive aspects of design of the project are valid at many levels of funding or timing, they are apt to be lost if the level of effort is too low and restricted to too few technologies or if the timing is delayed so that information is available only after the decisive period when action will be taken. To accomplish the aims of helping the Tunisians to determine where, when, and how to introduce new energy sources, no more and no less is necessary.

II. PROJECT DESCRIPTION

A. Subproject 1. - Agricultural Applications

1. General Objectives and Expectations

The most general objectives for the Village Agricultural Subproject are the same as those for almost any Energy Office project in support of regional bureaus: the provision of energy for economic development. However, because of actual and anticipated disruptions in the flow of cheap energy on which previous economic development has been based, it is necessary to seek alternative energy forms. These alternatives should be both known and understood prior to their mass introduction by projected marketplace pricing forces. This statement is based on the desire to avoid expected political and social disruption attendant on the uncertainties of fossil fuel availability and costs as world known reserves of oil and gas are depleted.

The specific objective of Subproject 1, therefore, is to provide information to Tunisian decision makers that will assist them to relate economic and social development to energy availability. There is currently uncertainty that energy will be available in the late eighties to fulfill economic decline in use of domestic oil after 1989 is cause for concern. Current thinking in the country suggests a future reliance on nuclear energy,[5] but the financial aspects of that alternative appear to be formidable at this time. Additional alternatives must be given consideration and this subproject is designed to provide knowledge and experience with solar and wind reneable energy sources for rural economic development.

The expectations from Subproject 1 therefore are that Tunisian decision makers will have enough understanding of the limits and value of selected renewable energy technologies to decide when and where they should be introduced into rural economic development programs.

An additional expectation is that American decision makers will have a double interest in following this subproject. First, with specific concern for the regional economic development program of Central Tunisia, renewable energy forms should be evaluated for applicability to this project. Second, American policy on energy for developing countries is based on availability of renewable energy forms. AID should prove its point with several successful demonstration projects in a variety of situations around the world.

The objective of Subproject 1, Agricultural Applications, is thus simply stated as an early demonstration of the utility of solar and wind technologies to provide an alternative base for continued rural economic development.

---

5. op. cit. Apercu, pps. 1, 10.

2. The Site for Applications

The village of Hasse El Frid is approached over passes through the mountains which separate it from the capital of the Governorate, Kasserine, in Central Tunisia (See Maps I and II). Approximately 70 kilometers by road from this modern town, with the last 30 over rough tracks, the village of 50 families (600 people) is remote, but not completely out of contact with larger towns. The first visual impression is one of self sufficiency, for it is located on a large flat plain which is surrounded by mountain barriers which inhibit the flow of people, goods, and services, and from the point of view of this demonstration, make central grid electrification prohibitively expensive.

The approach to the village is through fields which are occasionally covered by wild grasses (alfa, used in the production of paper in a factory in Kasserine) but which otherwise are barren. Only at the point where a first distant view is had, through the buildings reflecting the strong sunlight, do the lands become cultivated, primarily in forage crops, especially cactus. Agriculture becomes more intense as the village is approached; dry cereal production appears, then fruit and nut trees, and finally, with the appearance of the two wells providing irrigation, two plots of three and four hectares of truck garden vegetables.

The first application of renewable energy will be to provide water to intensify the current agricultural yield, both by better watering of present crops and by changing the cropping pattern to produce more valuable crops. As will be discussed in more detail below in the technology and economic reviews, the expectation of the Ministry of Agriculture is that cereal yields are better in other parts of Tunisia, and that irrigation should be used in the interior to introduce new, more valuable, cropping patterns, especially in certain truck farming vegetables: beans, tomatoes, melons, and peppers.

To make the agricultural policy a reality in Hasse El Frid, photovoltaic panels will be placed in the fields to power small pumps for a few new wells. The ultimate groundwater potential of the plain is currently under investigation, but the proposed demonstration project is small enough to fit within the safe yield.

As a water and energy conservation measure, young fruit trees will be watered by a system which combines photovoltaic panels and drip irrigation. Evapotranspiration from the trees is greatly influenced by sunlight, and so is the production of energy from the solar panels, thus facilitating an equilibrium of supply and demand.

In addition, the Agricultural Ministry would like to encourage after-season growing of vegetables through the use of greenhouses. Passive solar designs, with active assists, will be used to extend the growing season and bring better prices and availability for vegetables in the winter season.

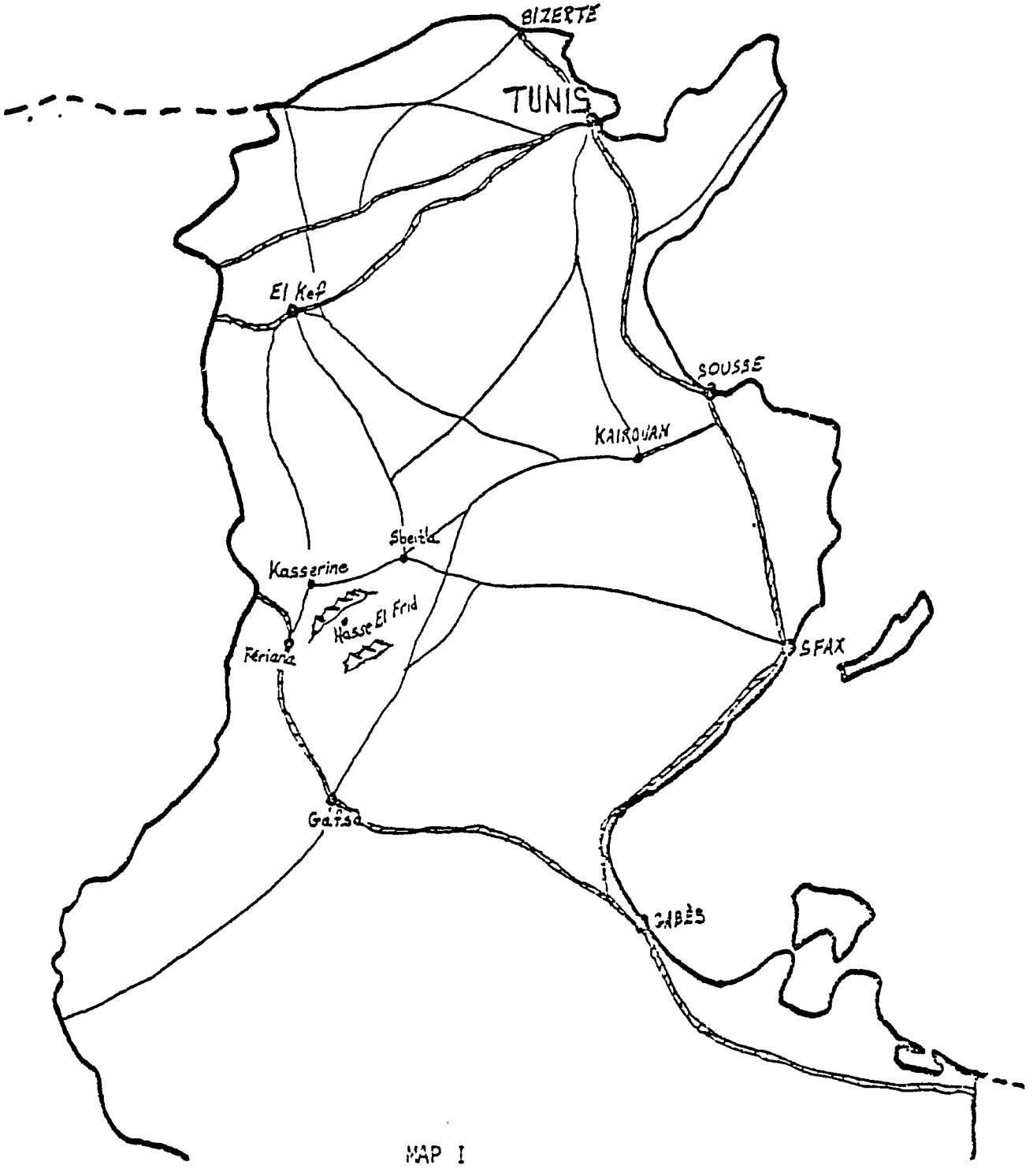

MAP I

Hasse El Frid: Orientation Map

principal trunk highway
other long-distance road
mountain range
city or village
0 100 km

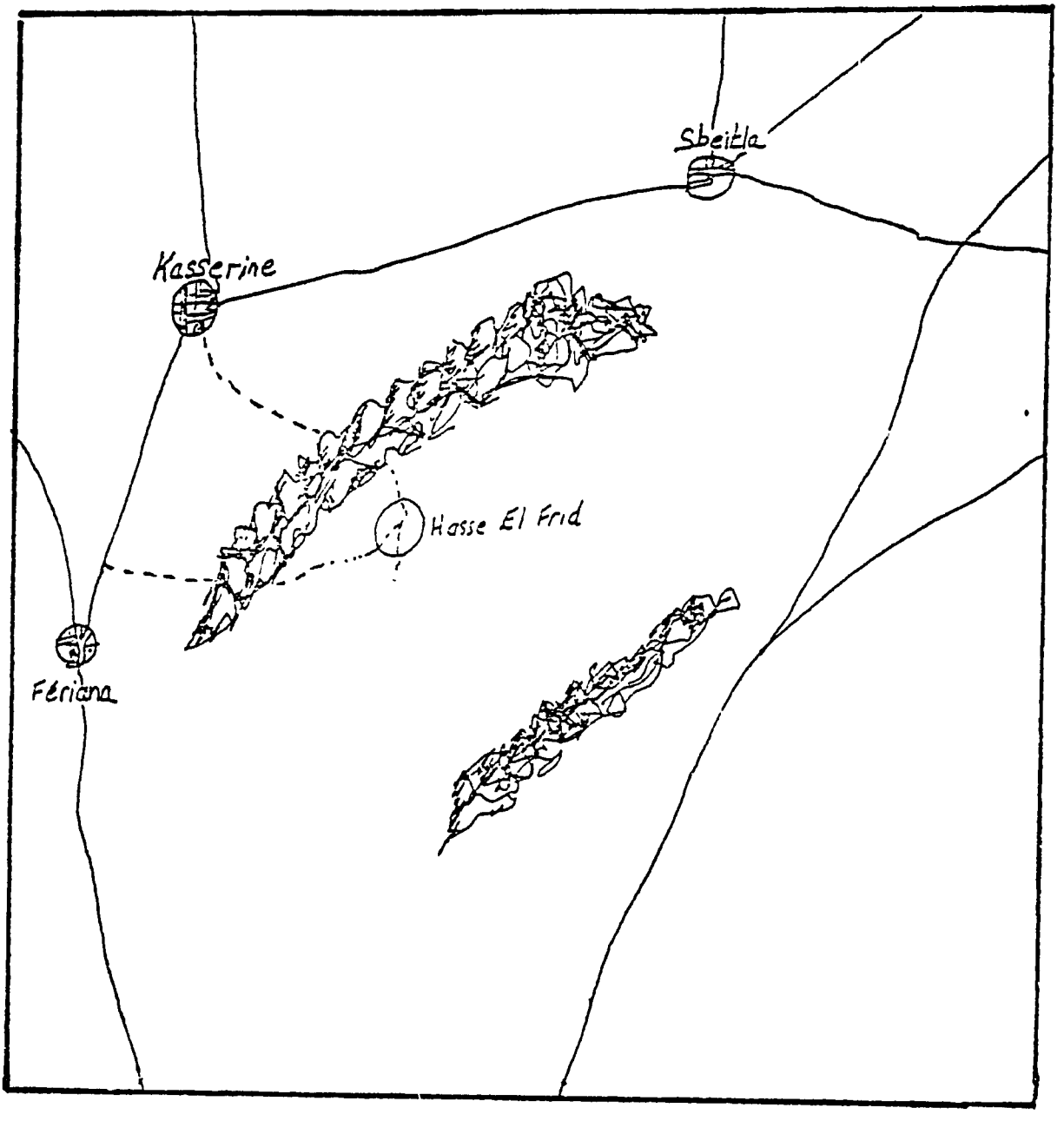

MAP II

Relationship to Hasse El Frid
to Nearby Towns

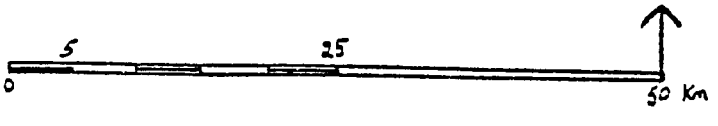

There will also be an option for an energy system to place the existing potable water supply in more accessible and sanitary conditions. Currently, water is brought from the well by animals over a slight rise to the village center and homes about 300 meters distant. Covering the well and pumping the water to a standpipe in the village can avoid contamination and illness. (This option will be given in the next design phase when the process of final allocation or energy uses is completed.)

Also, when the commercial people were interviewed in the village, they indicated that electricity was needed for lighting so that productivity could increase both through extending the working day and through providing power for machines. The team was shown the foot treadle sewing machine that the local tailor wanted to replace and the miller's defunct flour mill whose gas engine was beyond repair. The local repairman especially needed light at night so he could provide maintenance for machines when they were not in use during the working day. The local health official noted that he had to condemn perishable foods in the summer, thus indicating a need for refrigeration

In sum, the time spent reviewing projected needs in the commercial sector indicated that solar energy applied to workshop lighting, small manufacturing machines, and refrigeration would better prepare merchants to service the weekly market and meet the daily needs of the villagers. Just as economic performance would improve in the agricultural sector, the commercial sector also appears ready for expansion through the application of renewable energy.

However, the team was warned by the du Cabinet Chef for the Minister of Industry, Mines and Energy that focussing entirely on direct economic productivity would not suffice, for the population would leave the villages and contribute to urban congestion unless amenities were provided in the village itself. This demand for amenities was repeated by the village leader. Without prodding, we asked for his judgement for priority uses of energy. First, he requested lighting for homes; second, he repeated the villagers' demand for communications devices, radios and television, and only third, did he ask for pumping power for wells. This ordering was poignant testimony to the need to apply renewable energy to the daily life infrastructure that lay at the base of economic productivity.

The team, therefore, set about designing a photovoltaic array that would provide 150 watts of electricity for each of the 50 families, to be used by them for their priority needs. In the future, wires will be run to blocs of individual homes from a common bank of photovoltaic panels and energy will be provided from storage batteries for approximately four hours a day.

These individual uses of electricity will not suffice to meet the public needs and, if needs are not met in public places, the escalation of individual demands could overtax the system design. The publicly available power sources, aside from the previously mentioned water supply, will include light for the school (which operates in the evening), light for the social center, including power for a collective television set, and light for the

infirmary. The infirmary will also benefit from solar space heating and hot water for washing and patient care. Currently, the infirmary is often too cold to treat patients adequately. Lastly, a small amount of refrigeration will be provided to store medicines. These applications of electricity to education, health, and welfare can dramatically change village life and make it more attractive. While the team did not mention another application for public purposes, it did note a new mosque under construction and it is likely that one day the minaret will be endowed with an appropriate technology-based lighting system.

It can be expected that all of these amenities will attract new population and escalated demands for power, raising the issue of the amounts of energy to be provided. In discussions with the provincial governor and the director of the Central Tunisia Development Authority the issue was resolved as follows: the AID design criteria will be to meet current demands as described, with costs for that system to be met by grant funds. Then, the proposed design will be increased by 60 percent for future expansion, this portion to be paid by the Tunisian provincial government funds.

Using the available sunlight and wind, through the medium of renewable technology, Hasse El Frid will be the first solar and wind powered village to demonstrate that rural economic development can proceed in the future, in spite of the unavailability of fossil fuels. The village demonstration will show that rural life can improve both in economic productivity and basic amenities. The demonstration will indicate technological feasibility, if not economic feasibility under current limited volume manufacturing costs and approaches to solar technology. Current costs of oil also make diesel-based power less expensive, but the important part of this demonstration is to provide Tunisian decision makers with actual applications that show rural economic development can continue, even after Tunisian oil reserves are depleted. This fact is by no means evident to Tunisian leaders. In the early eighties it will be possible to "visit" the future eighties by asking villagers what life is like in a renewable energy environment. Hasse El Frid will provide early knowledge to help plan for the next generation of economic development infrastructure.

3. Technology/Function Summary

The objective of the subproject is demonstration of the ability of solar and wind technology to perform work and supply the minimum services necessary in a rural agricultural setting. Table I shows the number and types of solar and wind technologies selected for applications surrounding and in the village of Hasse El Frid. See Figure 1 for general village layouts. The total subproject will have components located in various parts of the valley study area. Exact sites for the applications and thus detailed design criteria can only be selected during the design phase of the project. However, it is possible at this time to stipulate the nature and size of each application and to estimate performance and costs. The technology descriptions are presented in the order which was established in the section on site description and the general order presented in Table I.

Eight separate types of technology applications have been selected and in some cases more than one installation is planned. Viewed as a whole it would seem to be more efficient and cost-effective to combine some of the demonstrations into single components, i.e. plan one centrally located solar collector for the village public, commercial and residential applications. However, the purpose of the subproject is to demonstrate various applications in rural settings and not a total system. By separating and keeping separate the applications it will be easier to evaluate how the various uses of energy are affected by and affect the technology applied. It is for this reason that eight separate technology systems are planned.

Much of the data necessary to design the agricultural and village demonstration is useful for more than one application and is thus summarized and presented prior to the description of the applications. Figure 2 is a presentation of solar radiation data by month at Kairouan, the closest meteorological station. Table II summarizes this data as design criteria. Figure 3 presents a wind rose for Kairouan. The continuous meteorological station at Kairouan was chosen to represent the weather at Hasse El Frid on advice from Tunisian meteorologists. Specific data pertinent for only one application is presented in the section on that system.

The sizing of each of the eight technology systems was decided upon using information on the minimum amount of energy required for a given task, the average size of ranch or home, the priorities established in village and region, the cost and reliability of various technologies, etc. Thus the sizing is only preliminary and will be adjusted or verified during the engineering design phase of the project. For this reason, for example, the four solar derived electricity applications, number four in Table I, could be changed to three or two larger sized demonstrations. It is also possible that the commercial demonstration, number 7 in Table I, could be adjusted to provide electricity to more shops of the same type or to different types. If this course is followed, the sizing of the system could be increased. Additional costs, availability of local equipment and improved meteorological data could also dictate changes in the applications during the design phase.

Table I

Planned Technology Applications and Uses in Hasse El Frid

TECHNOLOGY APPLICATION	NUMBER OF INSTALLATIONS	LOCATION/USE OF ENERGY
1. Wind driven (farm or aeromotor type windmill) mechanical well pumping	2	1 - 2 Hectare Farms outside village for supplemental irrigation of wheat or forage crops
2. Wind derived electricity (2 - 3 bladed horizontal windmill)	2	1 - 3 Hectare Farms outside village for supplemental irrigation and lighting
3. Solar powered/regulated drip irrigation (photovoltaics)	2	2 - 3 Hectare Farm outside village for new/young fruit trees
4. Solar derived electricity (photovoltaics)	4	2 - 3 Hectare Farm outside village for irrigation of a range of crops and lighting
5. Greenhouse with active solar hot air heating and wind powered mechanical well pumping	2	Land near village and wells for growing winter vegetables and protection against freezing
6. Solar derived (photovoltaics) electrical system for priority public uses	1	Heat, refrigeration, communication, lighting and power for infirmary, school, central village water provision and party headquarters
7. Solar derived (photovoltaics) electrical system for village commercial uses	1	Lighting, refrigeration, cooking and mechanical power in village center
8. Solar derived (photovoltaics) electrical system for village residential uses	1	Lighting, radio

Figure 1

General Location Map* of Village of Hasse El Frid

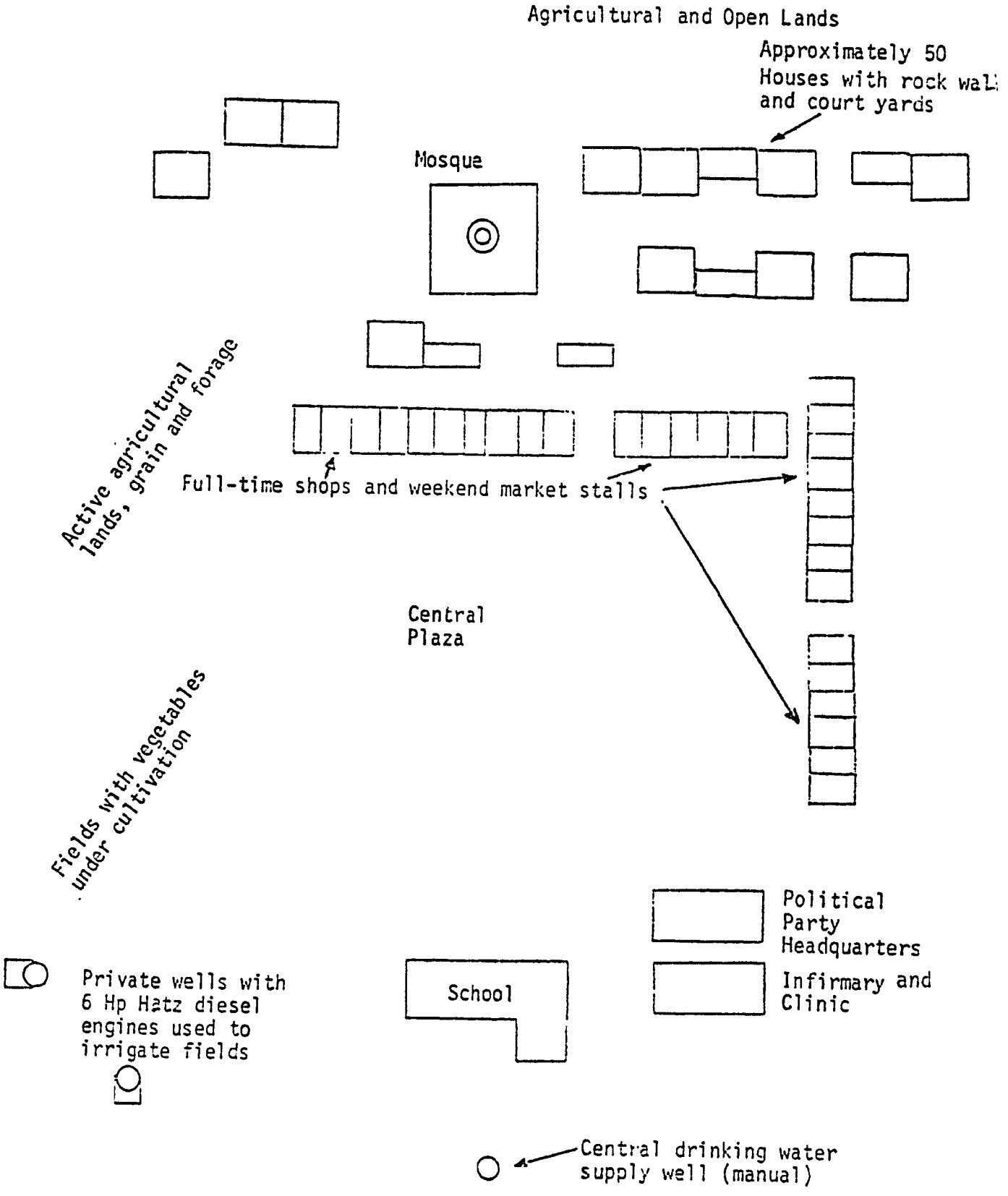

DEVELOPMENT SCIENCES INC.

*Plan view not to scale

Figure 2

1977 Solar Energy Measured at Kairouan in Langleys

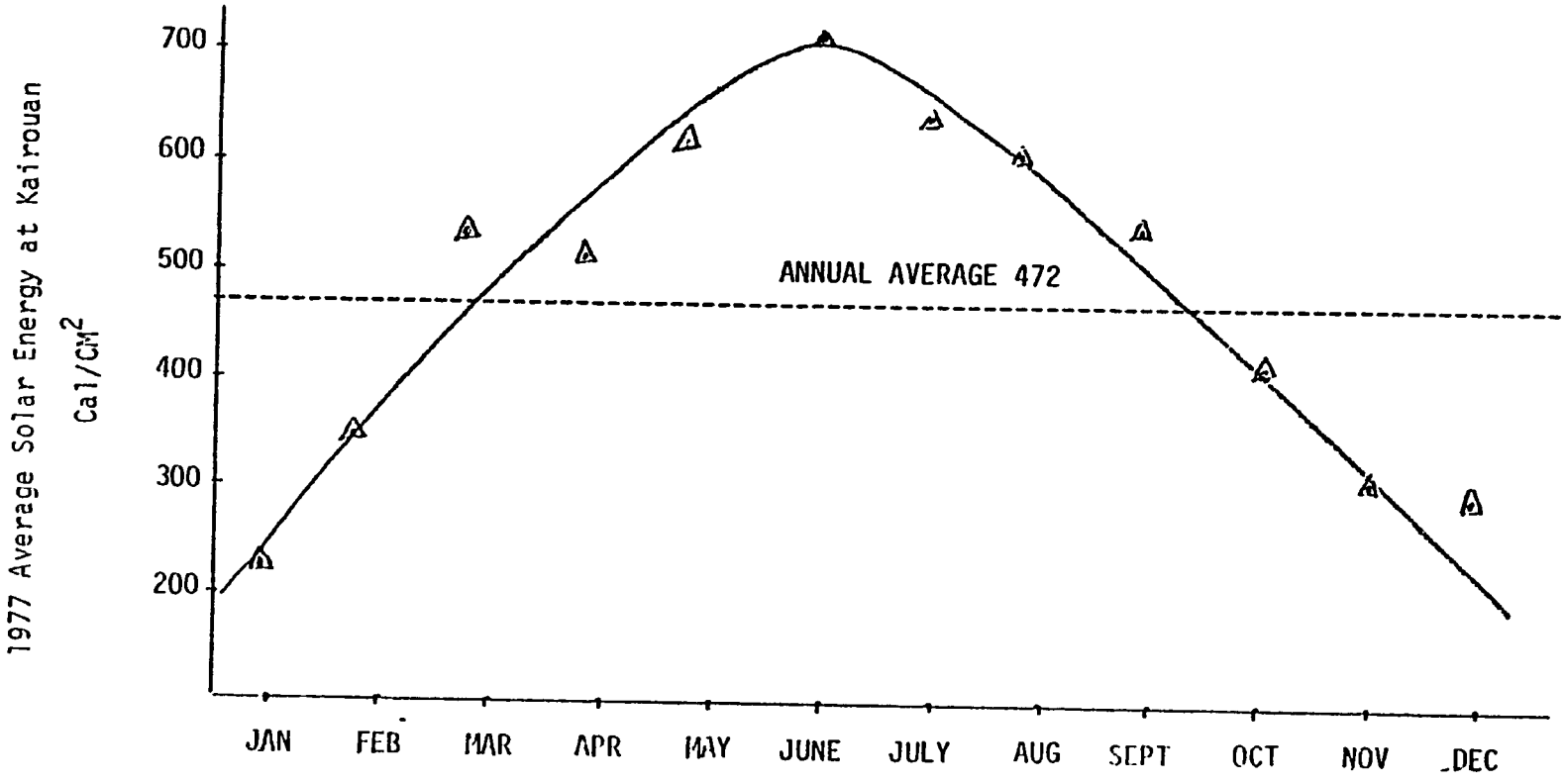

Source: Bulletin Mensuel du Centre Regional de Rayonnement Sidi Bou Saidj Service de la Meteorologie Nationale Tunisie

DEVELOPMENT SCIENCES INC.

Table II

Solar Radiation at Kairouan*

Month	Solar Radiation	
	Gram Cal/CM^2/day	KWH/M^2/day
Average	472	5.5
June	698	8.1
January	225	2.6

* The insolation value for Kairouan is 3150 hours per year which is approximately 8.6 hours of sunlight per day.

FREQUENCE DE VENT

KAIROUAN

Période : 1951_1970

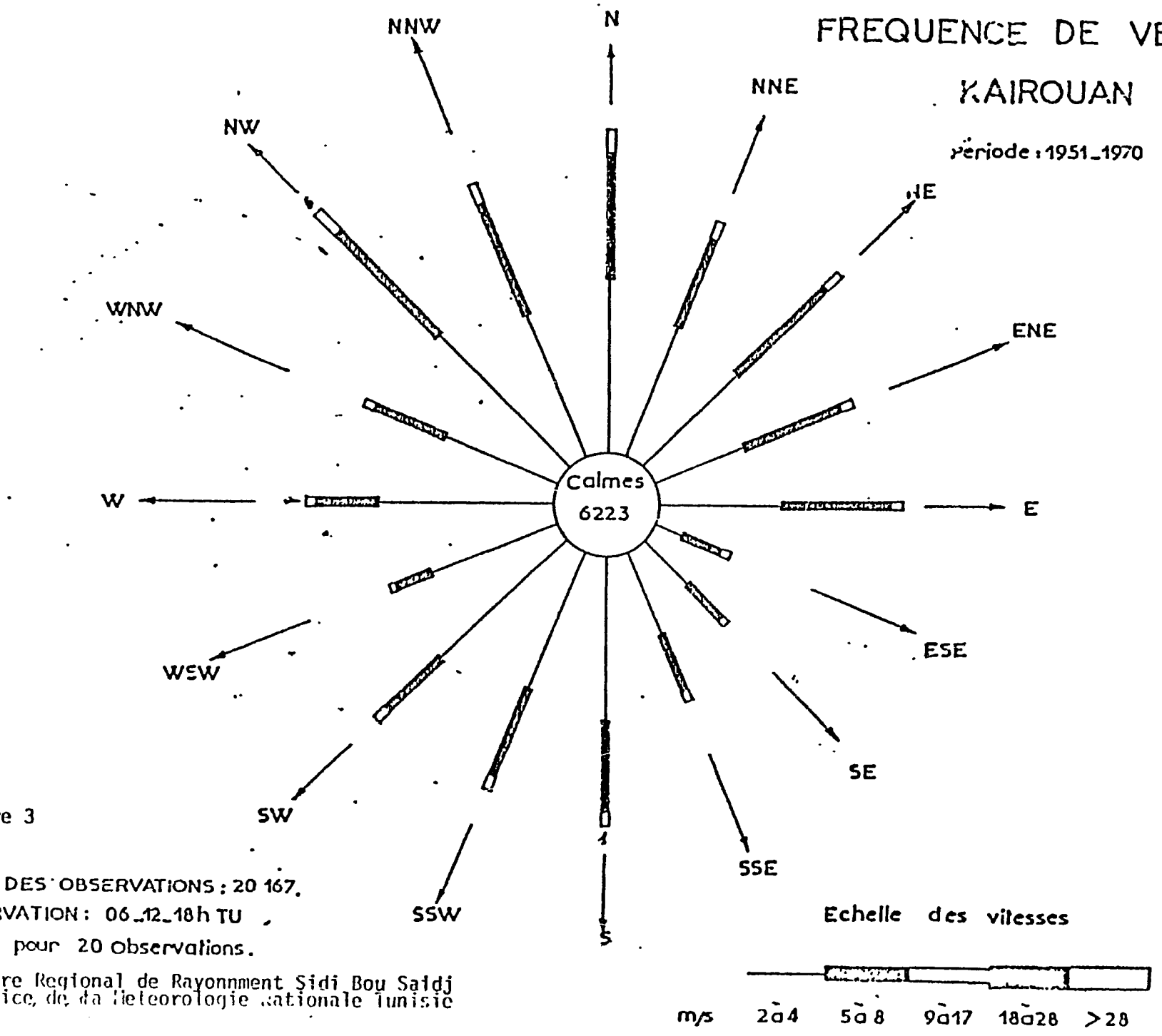

Figure 3

NOMBRE TOTAL DES OBSERVATIONS : 20 167.
HEURES D'OBSERVATION : 06_12_18h TU
ECHELLE : 1 nym pour 20 observations.

Référence : Centre Regional de Rayonnment Sidi Bou Saidj
Service de la Meteorologie Nationale Tunisie

3.1 Technical Details of a Wind Driven Mechanical Well Pumping System for Forage and Wheat Irrigation

The efficiency of wind driven mechanical pumping of water for supplemental irrigation is defined by the micrometeorology of the site in which the wind machine is located, the pumping head and the characteristics of the water demand. For example, obstructions within 150 meters of a wind tower can dramatically affect the wind regime and alter the output of a wind powered pump. The minimum (rule of thumb) requirement for successful application of a wind driven (mechanical) pump is an average wind speed of greater than 3 meters/second (optimally greater than 5 meters/second). Pumping heads (dynamic) should also be less than 15 meters. If these minimum conditions are met at a site and the water demand is not too great (less than 50 liters/minute), mechanical wind driven irrigation is simple and feasible. For the above-described conditions, multibladed farm or aeromotor type wind machines mounted on 10-meter towers can provide sufficient mechanical energy to meet grain and forage crop supplemental irrigation needs in the project area (see Table III). Figure 3 shows the wind regime at the closest and most similar Tunisian meteorological station (Kairouan). The project site is approximately 10 km further inland from the coast and 60 km further south than Kairouan, but climatic and geological conditions are similar. Using tabulated data for 20,167 instantaneous observations (20 years) of velocity and direction at Kairouan taken at 6 a.m., 12 noon, and 6 p.m. the numerical average of all wind speed recordings was found to be 2.6 meters/second. This calculated average is undoubtedly low because it does not include evening and night measurements. Night winds are very common in this semi-arid region and thus the actual average wind velocity should be significantly higher. A data collection effort has been initiated in this region by the National Meteorological Service and at the time of project design much better site specific wind data will be available. Actual sizing of windmills is a function of the velocity cubed and not the average wind speed, however, for ease of understanding average wind speed is displayed and discussed.

Under the conditions described above, a multibladed farm type wind machine on a 10-meter tower with 3 to 4 meter diameter blades could be expected to supply up to 1 liter/second or 43 m^3 of water per day when pumping for at least 12 hours. Based on the maximum amount of supplemental water needed for grain shown in Table III (600 m^3) and assuming a pumping rate of 1 liter/second and 12 hours/day of pumping, it would take 14 days operation to supply the water necessary for 1 hectare of grain. By adjusting the planting pattern and phasing the planting of grain, the water need for a farm could be spread out. In this way, a wind powered pump sized as above could possibly supply water for two hectares of grain. Because all the design assumptions have been very conservative it is anticipated that the wind system shown in Figure 4 could serve at least 2 hectares of land. For this subproject, two installations of the type described in Figure 4 will be provided near the village.

Table III

Traditional Supplemental Irrigation Water Requirements
for
Various Crops Grown in Central Tunisia
(Average M^3/Month/Hectare)

Month	CROP		
	Fruit Trees	Tomatoes*	Grain
January	-	-	300
February	400	-	300
March	400	300	600
April	500	400	600
May	300	900	-
June	-	1,200	-
July	-	1,500	-
August	-	1,300	-
September	500	1,000	600
October	-	400	400
November	-	-	400
December	-	-	-
TOTAL	2,100	7,000	3,200

Reference: Tunisian Ministry of Agriculture Data and a Report titled, "La Culture de la Tomate", published by La Division de la Vulgarisation ed du Recyclage, Ministry of Agriculture.

* An average for vegetables and truck gardening

Figure 4

Schematic Representation of Major Components of the Wind Driven Mechanical Well Pumping System for Forage and Wheat Irrigation

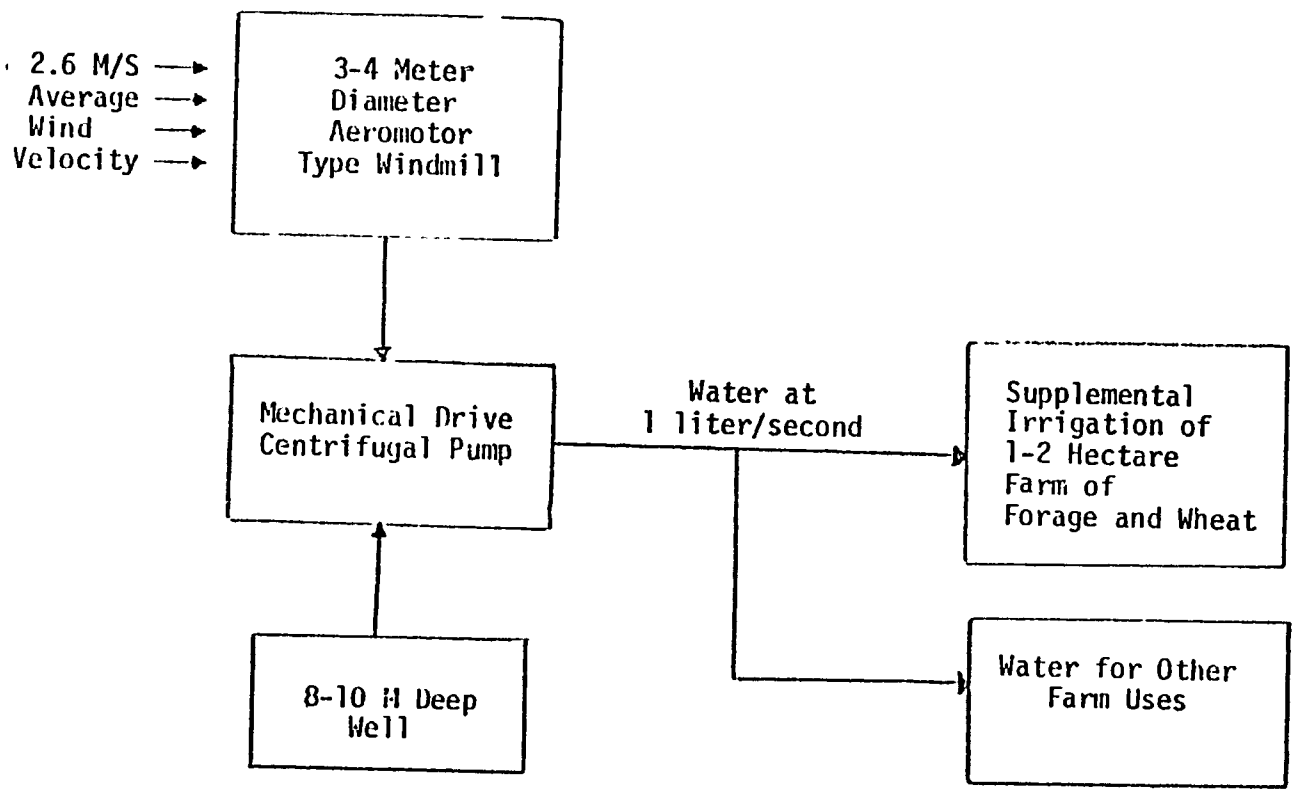

DEVELOPMENT SCIENCES INC.

3.2 Technical Details of Wind Derived Electricity Generation Systems for Well Pumping and Farm Electrification

The preceding section on wind driven mechanical pumping contains a general description of the wind regimes, groundwater conditions and general design assumptions for wind machine based systems. Table IV is a summary of these data and also includes information about the wind/electricity systems.

Preliminary indications are that both of the applications of wind driven electrification should be a 2 or 3 bladed horizontal windmills (modern in contrast to the farm type specified for the direct drive pumping). The final decision as to whether to use the more efficient modern type windmills can be made during the project design phase when better wind data is available. A system designed to supply 1 kw of electricity under optimum wind conditions will provide sufficient power to irrigate at least 2 hectares for wheat and during the months when supplemental irrigation is not necessary (see Table III), lighting, communication, entertainment and heating needs can be supplied. Figure 5 is a schematic representation of the proposed system.

Table IV

Summary of Site Specific Design Criteria
and Description of Major System Components

ITEM	VALUE	REMARKS
Average Wind velocity	2.6 M/Sec	12 Hour average not including night winds which will increase average
Total system pumping head	$\leq$ 12 M	---
Electricity Uses	Lighting - 150 watts - 4 hrs Communication - 70 watts - 4 hrs Irrigation - 0.4 hp/hectare or 11 M^3 per two hectares	Alternating current
Pump type and size	1 hp centrifugal	---
Wind machine type and size	3 blade 3-4 meter diameter 1000 watt capacity	This is the largest size practical. Possibly a aeromotor type will be necessary
Battery and Alternator	20 KWh battery storage and 1 KW alternator	Enough storage for approximately five days

Figure 5

Schematic Representation of Major Components of the Wind Powered Electrification System

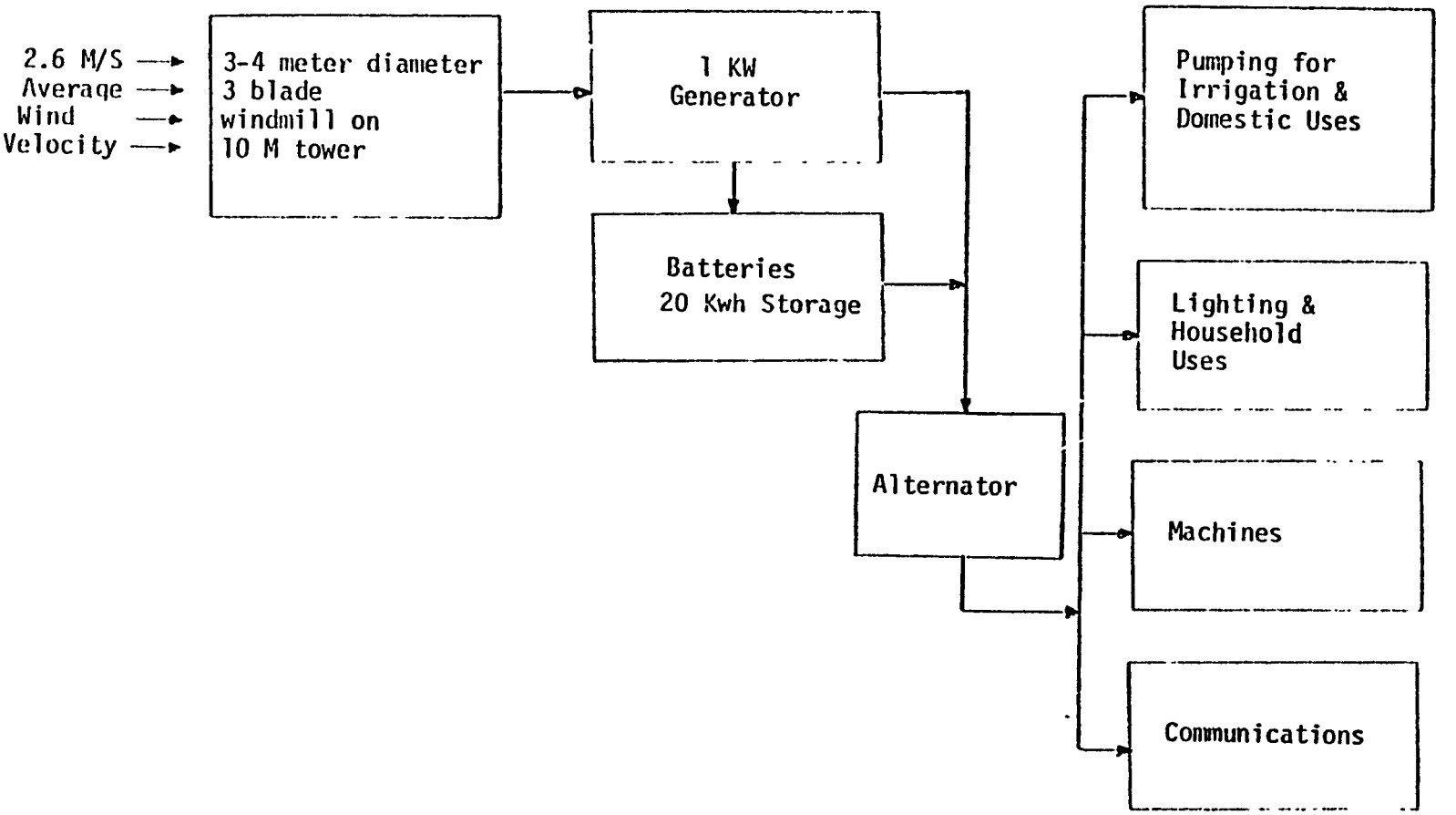

DEVELOPMENT SCIENCES INC.

3.3 Technical Details for a Photovoltaic Powered Drip Irrigation System for Fruit Tree Irrigation in the Project Area

The proposed irrigation system combining photovoltaic powered pumping and low evaporation irrigation (drip irrigation--see Figure 6) assumes that the rate of water application to fruit or nut trees is regulated, among other things, by the rate of evapotranspiration of the tree. For similar sized trees (same age and approximate leaf and root areas) this rate would be determined by the solar energy received by the trees. The power output of a photovoltaic system is also regulated by the amount of solar energy received. Thus, the theory for this application indicates that when solar radiation changes an appropriately designed photovoltaic powered pumping system will change the supply of water to trees in direct proportion to water need. This system in theory is expected to require the minimum amount of irrigation water for proper fruit tree irrigation. Drip irrigation is especially efficient for newly planted and young fruit trees with small root systems. For mature trees with extensive root coverage spray irrigation is cost-competitive. Table V shows data comparing the efficiency of several types of irrigation systems for young fruit trees.

The two photovoltaic powered drip irrigation systems (PPDI) to be demonstrated are to serve three hectare orchards of newly planted fruit trees. This is typical of the size of orchard expected to be developed in the central Tunisian project area. Data in Table III shows traditional water use by month for irrigation of various crops. This shows that for 1 hectare the maximum requirement for supplemental irrigation would be 500 M^3 in April for fruit trees. It is expected that the PPDI System will actually require only 33 to 50 percent as much irrigation as conventional irrigation (see Table V); however, the instantaneous rate of application at any one time may be equivalent to that for traditional irrigation. Therefore, a pump capable of supplying the average daily water needs for traditional irrigation has been specified. The maximum pumping rate for a three hectare fruit tree orchard is calculated as approximately 4 M^3/hour.

The maximum expected depth of water to be pumped in the project area is between eight and 10 meters below ground level and the additional system head including a filtration system is assumed at a maximum to be 3 meters. The system designed for 12 M head and 4 M^3/hour flow will require a 0.33 hp variable speed pump and 0.4 peak kilowatts of energy to run the pump. Using the data in Figure 6 and Table V, at a maximum a solar array of approximately 10 M^2 will serve for the system. The system will not include battery regulation or storage. The fluctuation of power caused by variations in solar energy will simulate the changes in evapotranspiration and supply water as needed. Additionally, the system will require water filtration to prevent plugging by insoluble solids (sand particles, etc.) of the holes in the plastic pipe through which water is delivered to the fruit trees. Table VI contains data describing the preliminary layout of the fruit tree orchard.

The above system is in fact a micro-irrigation application requiring at most 0.33 hp per 3 hectare orchard. Figure 6 summarizes the PPDI system

Figure 6

Schematic Representation of Major Components of the Photovoltaic Powered Drip Irrigation System

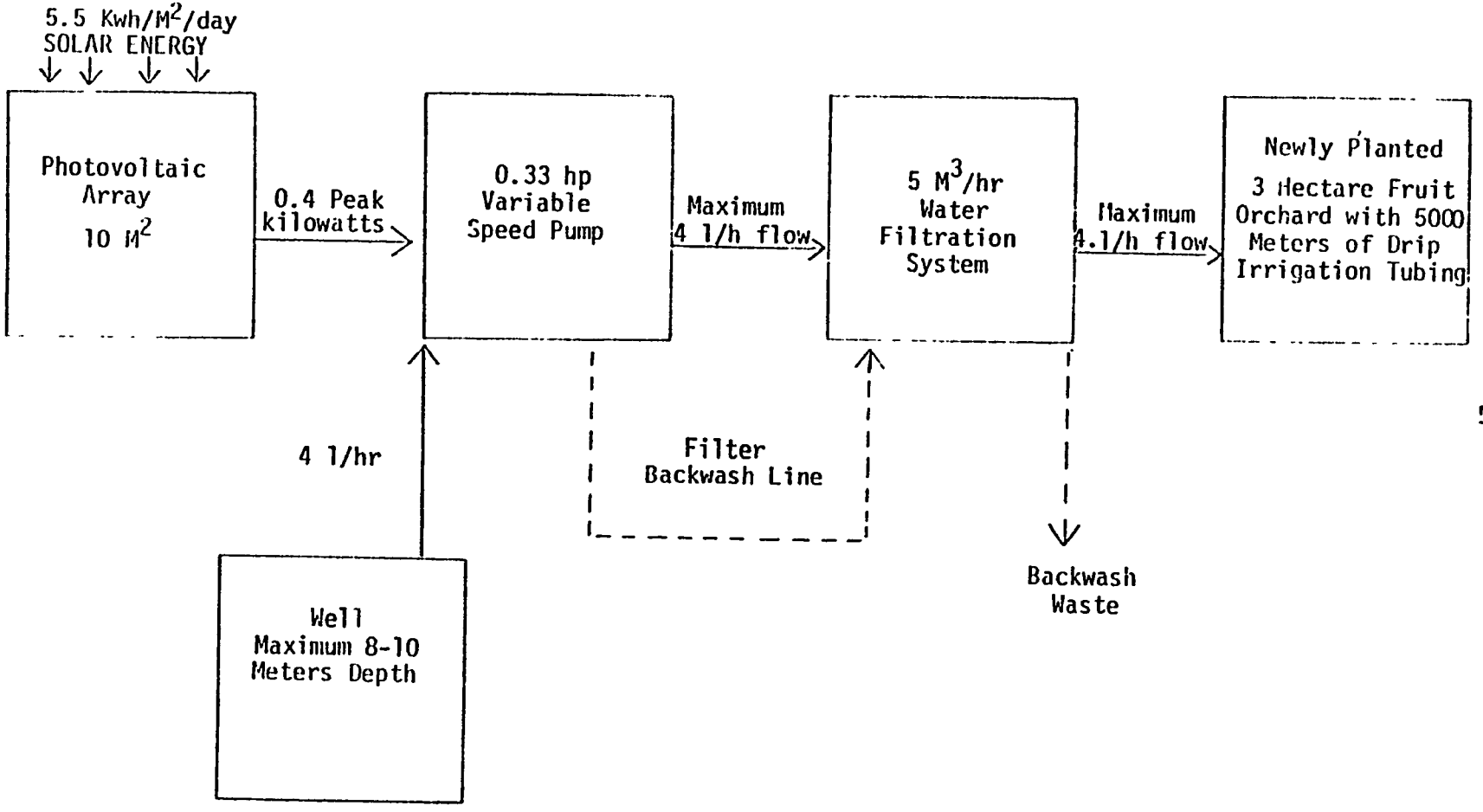

DEVELOPMENT SCIENCES INC.

Table V*

A Comparison of Theoretical Efficiency of Various Irrigation Systems

SYSTEM	EXPECTED WATER USE FACTOR FOR NEWLY PLANTED FRUIT TREES
Well managed drip irrigation system	1.0**
Average drip irrigation system	1.2
Well managed sprinkler system	1.3
Well managed traditional ditch irrigation	1.5
Average sprinkler system	1.8
Average traditional ditch irrigation	2.9

* Data developed from information supplied in personal communications with Mr. H. Gary Underhill, Vice President of Rain Bird, Glendora, California (Rain Bird is a US company manufacturing and selling drip and sprinkler irrigation systems).

** The factors listed indicate approximately how much water would be required with various irrigation systems, thus traditional irrigation will require approximately 2.9 times as much as well managed drip irrigation.

Table VI

Drip Irrigation System Layout Per Hectare

Plot Dimensions (Meters)	Tree Spacing	Tubing (Meters)
100 by 100	16 - 100 meter rows with 25 trees per row	1600

showing size and function of the major components. This type of system is also expected to be applicable to vegetables planted in the normal growing season and to winter vegetables grown in greenhouses. The technical components of the PPDI system include a first-year start of an orchard irrigation demonstration. The demonstration should run for at least three years.

3.4 Technical Details of a Solar Photovoltaic Electrification System for Four Farms in the Study Area

The electricity uses and general design criteria developed for the wind electrification systems (see Table IV) also apply to these photovoltaic applications. Additionally the solar energy data in Table II and in Figure 2 can be used to design the solar-photovoltaic electrification application in the study area.

The water pumping needs for this application include growing vegetables and grain on four three-hectare farms. As was indicated in the introduction, the selection of system numbers and sizes was based on preliminary data and it is expected that during the detailed engineering phase of the project these choices can be verified or changed. For this application it is possible that two larger systems rather than the four currently suggested will be selected and designed. From Table III the maximum expected supplemental water demand for a three-hectare farm with two hectares of grain and one hectare of vegetables would be 2400 M^3 in the month of September. This can be supplied if the planting of grain in September is staggered such that the second hectare is planted 15 to 20 days after the first. With this crop pattern a 1 hp pump would be required to supply the water and approximately 1.4 kw of electrical capacity. Additionally 500 watts should be provided for additional uses similar to those stipulated in the wind powered electrical system. The major system components are approximately 30 M^2 of photovoltaic collector (2 peak kw of electricity), 20 kwh of battery storage and an alternator. Figure 7 is a schematic representation of the system.

Figure 7

Schematic Representation of Major Components of Photovoltaic Electrification for Farms

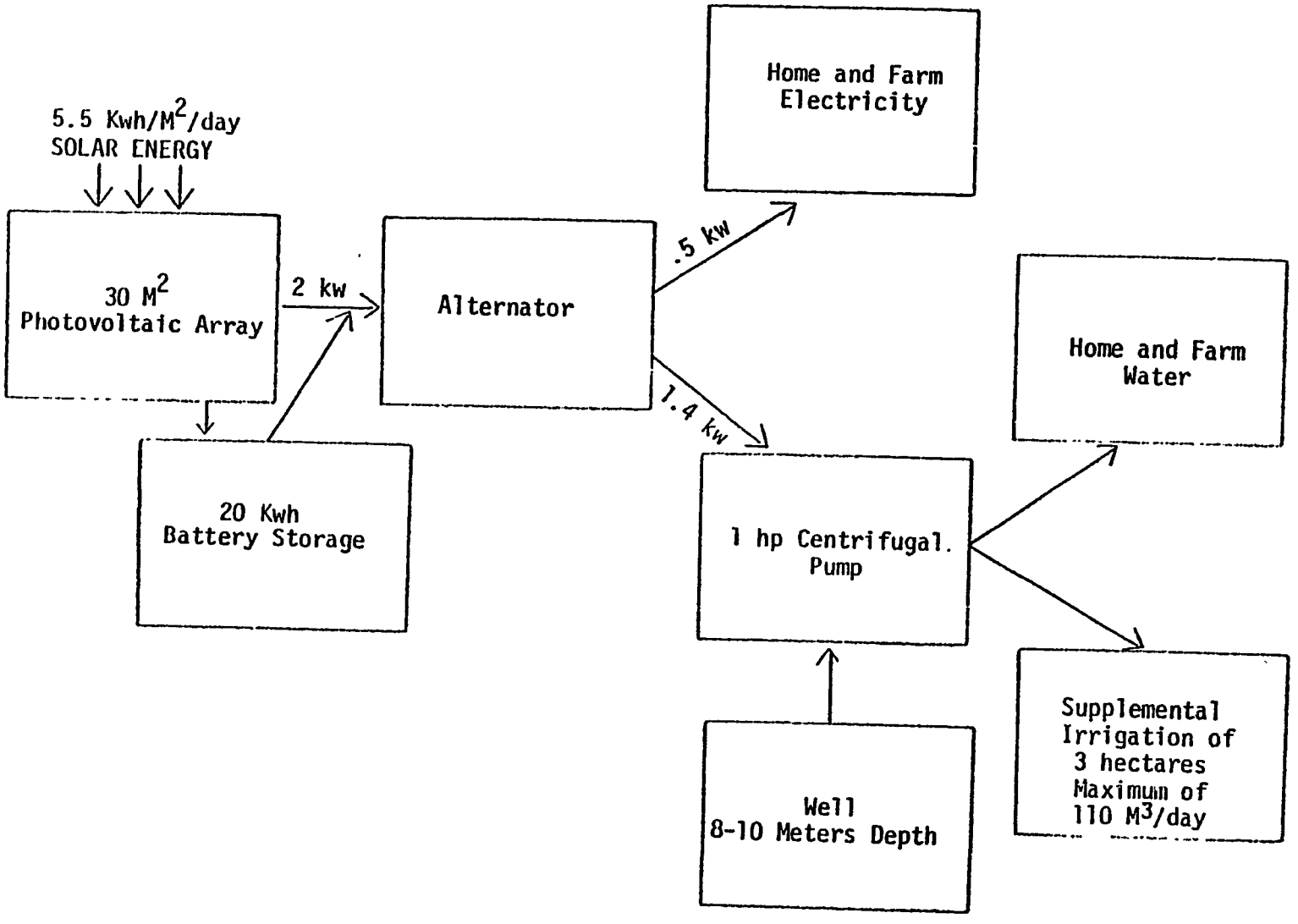

DEVELOPMENT SCIENCES INC.

3.5 Technical Details of a System Comprised of a Greenhouse with Supplemental Nighttime Heating by a Solar Hot Air System and Irrigation by Wind Powered Pumping

The system to be applied in two sites in the study area includes a greenhouse for winter vegetable cultivation with active solar hot air heating and heat storage. The heat storage will be provided through an underground excavation full of rocks to retain heat absorbed during the day and through thermal convection to provide heat to the greenhouse at night. For this winter greenhouse application data concerning size of greenhouse, minimum expected ambient temperature in the study area (0^oC), heat transfer coefficient through greenhouse covering (very likely the 180 micron plastic available in Tunisia), maximum wind velocity, minimum crop damage temperature (for tomatoes this is 4^oC), and minimum expected solar radiation per 5 day period would be required.

The preliminary design includes a 7 M wide x 21 M long x 3 M high greenhouse constructed of metal and wood framing and 180 micron plastic covering. It may be necessary to use glass for the greenhouse covering; however, a preliminary evaluation of the available wind velocity data indicates that wind over 17 M/sec are very rare.* Additionally, greenhouse cultivation is practiced on the coast of Tunisia in a wind regime which is felt to be similar to that in the project area and the coastal greenhouses are constructed using 180 micron plastic. If the location of the two greenhouses to be tested in the study area is carefully selected to shelter them from direct wind impact, plastic covering should withstand wind forces. There is also a possibility of hail damage to the plastic; and if hail is prevalent, glass would be required.

The systems will be located in an area where the solar radiation averages 472 $cal/cm^2/day$ (see Figure 2). Irrigation water requirements for this winter vegetable project are conservatively figured as 10 percent of the requirements for 1 hectare of vegetables in the summar or using Table III approximately 150 M^3/month. For this project a drip irrigation system of similar size to the fruit orchard system could be used. However, because the farm will have other crops during the summar a year-round water demand will need to be satisfied. For this reason a wind driven mechanical pumping system similar to that designed in Subproject 1 will be provided. Details of the pumping system are found in Figure 5.

A solar thermal hot air collector and heat storage system will also be required to warm the greenhouse during those periods at night when the ambient temperature drops below 4^oC. This system will include solar hot air panels and an underground stone filled heat storage sink. The project assumes a first year start and the demonstration running for at least three additional years. The final engineering design and materials selection process is scheduled to be completed during the first phase of the project. Figure 8 is a schematic representation of the major project component.

---

* This conclusion was arrived at by reviewing general wind velocity data for a number of meteorological stations managed by the Tunisian National Meteorological Service.

Figure 8

Schematic Representation of Major Components of System Containing Wind Powered Irrigation and a Greenhouse for Winter Vegetable Cultivation with Supplemental Nighttime Heating by a Solar Hot Air System

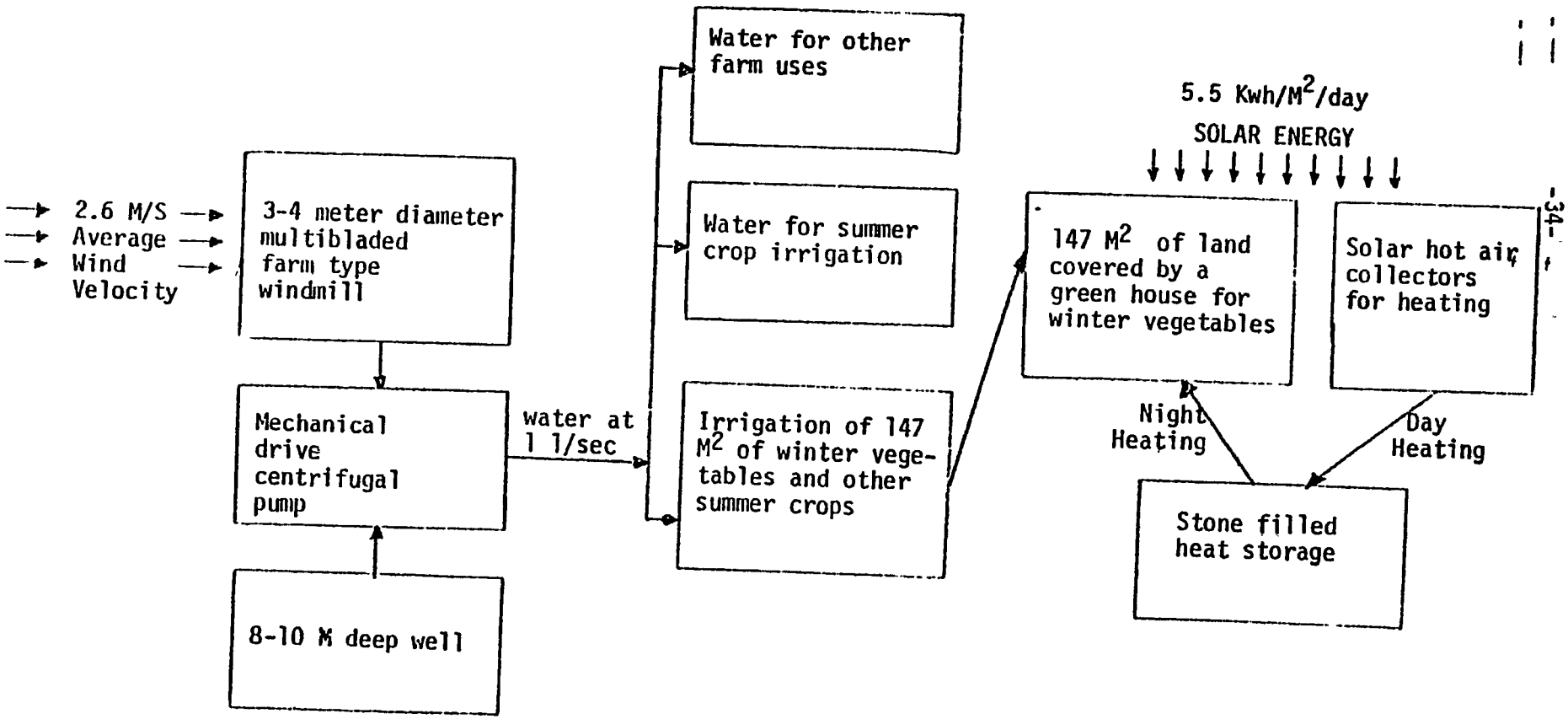

DEVELOPMENT SCIENCES INC.

3.6 Technical Details of a Solar Photovoltaic Electricity System for Priority Public Uses

The village of Hasse El Frid and surrounding area described elsewhere is shown in Figure 1. The village has 3 principal components: (1) The centrally located public buildings such as the school, infirmary and political party headquarters, (2) the market and commercial area and (3) the home area. This subproject is designed to provide electricity for heat, light and power to the public buildings.

The school requires lighting for classrooms and a kitchen meeting area, heating for cooking and electricity for a radio and television. The school presently serves 200 children with 100 being served a noon meal. The infirmary requires lighting and space heating for the examination room/laboratory, hot water, refrigeration and some mechanical tools. It is assumed that space heating for the infirmary will be provided by electricity; however, it is also very possible to use a solar hot air system similar to the one specified the the greenhouse. If this technology is in fact selected during the design phase the costing will be adjusted downward somewhat. The party headquarters could use lighting and electricity for a radio and television. Both could serve a central community need for communications and entertainment. Table VII summarizes the estimated needs and power requirements for a central system to serve each of the three priority public needs.

The total energy requirements amount to approximately 1600 Kwh/year with a safety and growth factor; the system should be designed to supply 1700 Kwh/year. The peak power demand per day is estimated to be 3.48 Kwh for the system use shown in Table VII and the local solar radiation data shown in Table II and Figure 2. For this a 4.0 peak kilowatt solar array and 40 Kwh of battery storage was selected. This system should provide electricity for the priority public uses and storage to cover a two-to-three-day period with less than the design level of sunlight. Figure 9 is a schematic representation of the system.

Table VII

Estimated Electricity Use Factors for
Priority Public Uses in Hasse El Frid

Use	Power Watts	Use Factor Hrs per Week	Subtotal Watt Hrs/Week
School			
Lighting 3 Rooms & kitchen	800	10	8000
Heating for cooking	1000	10	10000
Other (radio, etc.)	200	5	1000
Subtotal			19000
Infirmary			
Lighting	180	5	900
Cold storage	80	50	4000
Heating	1000	3	3000
			7900
Party Headquarters			
Lighting	120	20	2400
Radio/TV	100	15	1500
			3900
TOTAL	3430	122	30,800/week 1601.6 Kwh/year

Figure 9

Schematic Representation of Major Components of Photovoltaic Electrification for Priority Public Uses in Village

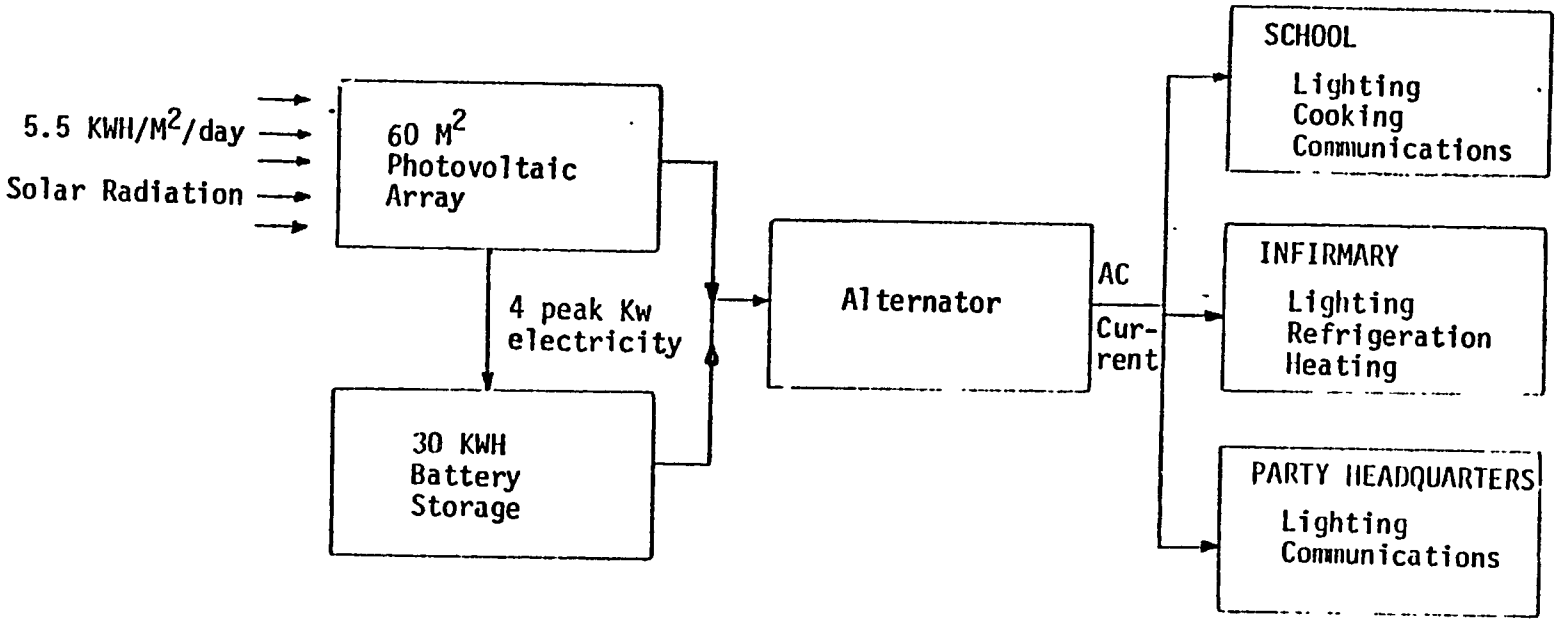

DEVELOPMENT SCIENCES INC.

HDX

3.7 Technical Details of a Solar Photovoltaic Electricity System for Priority Commercial Uses

The location map of Hasse El Frid (see Figure 1) defines an area of the village for full-time and weekend market commercial activity. The shops are narrow windowless rooms with only the open door admitting light. Flat or window glass is not manufactured in Tunisia and thus only the school and a few other buildings in the village have windows. Approximately 10 shops are used during the week and on market days over 30 shops and numerous open areas are occupied. Lighting would be limited to 4 hours each day in the shops and other electrical uses would be controlled as is suggested in Table VIII. The estimated minimum electricity needs for this area are shown in this table. The data shows that with a growth/safety factor of 20 percent a system of approximately 6.5 peak Kw is needed. In order to provide electricity storage a 100 Kwh battery system is provided. A 6.5 peak Kw solar array would require approximately 100 M^2 of solar collectors. Figure 9 is a schematic representation of the proposed system.

It is noted that one central water supply in the center of the market area would benefit all of the residents of the town A system composed of either a solar or wind-driven pump at the present well (see Figure 1), piping from the well, and a water storage and delivery system in the market area is needed. It is expected that this system will be considered during the engineering design phase of the project. The water pumping could require additional solar or wind capacity or a new application; however, it is expected that this can only be decided upon at the time of the design. The rest of the water supply system will be supplied by the Tunisian Government.

Table VIII

Estimated Minimum Electricity Demands
From Priority Commercial Uses

Use	Power Watts	Use Factor Hours/Week	Subtotal Kwh/Week
Full-time Shops			
• Tailor			
Lights	120	40	4.8
Sewing machine	75	20	1.5
• Butcher			
Lights	120	40	4.8
Refrigeration ($0.3M^3$)	80	168	12.8
• Bakery			
Lights	120	40	4.8
Grain mill	500	5	2.5
Oven	2000	15	30.0
Refrigeration ($0.3M^3$)	80	168	12.8
• Market			
Lights	120	40	4.8
Refrigeration ($0.3M^3$)	80	168	12.8
Weekly Market Uses			
Central lighting	1000	40	40.0
Miscellaneous electricity	1000	10	10.0
TOTAL	5295	754	141.6
			7363.2 Kwh/year

Figure 10

Schematic Representation of Major Components of Photovoltaic Electrification for Priority Commercial Uses

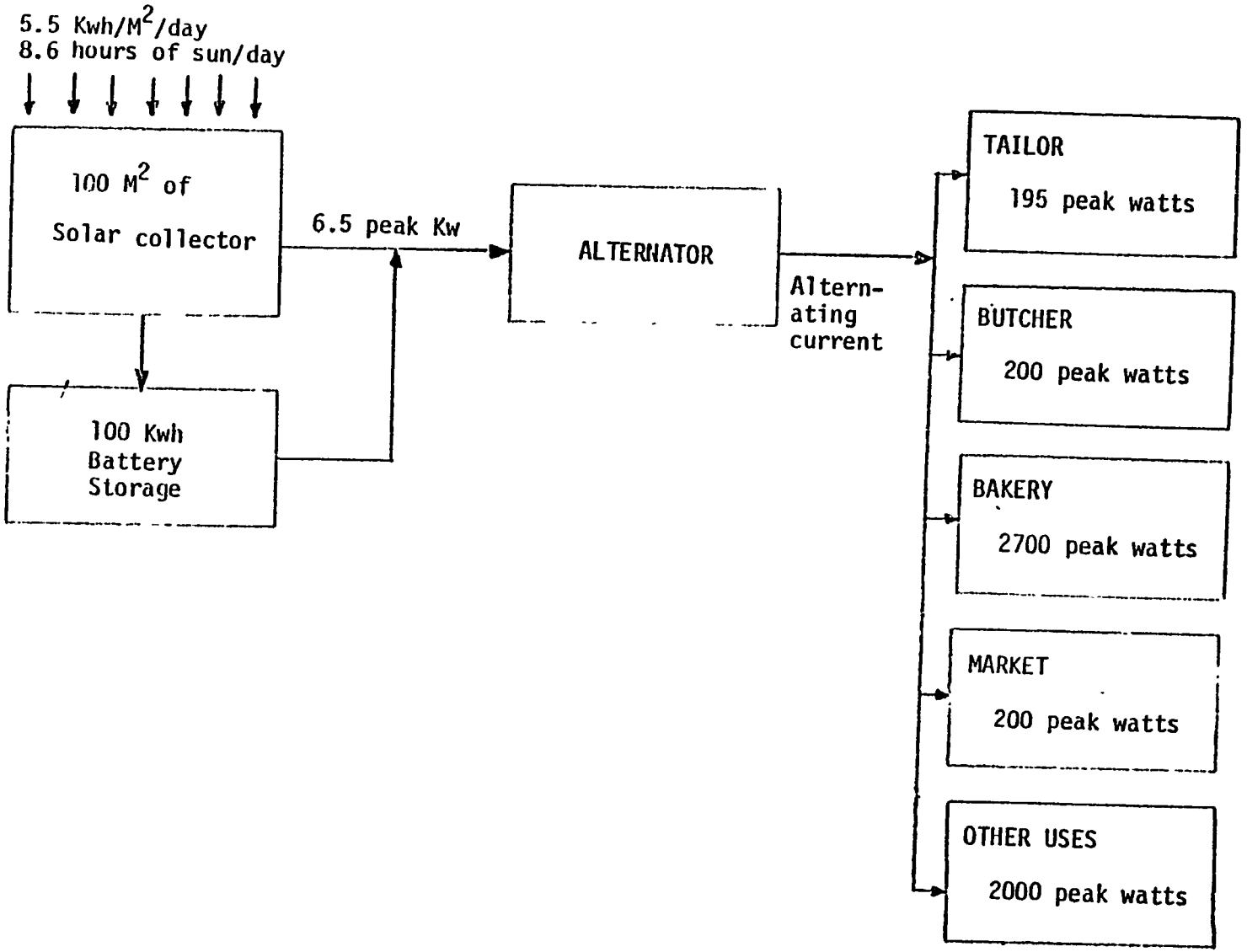

DEVELOPMENT SCIENCES INC.

3.8 Technical Details of a Solar Photovoltaic Electricity System for Priority Residential Uses

Hasse El Frid shown in Figure 2 has approximately 50 houses and anticipates 10 more within the next year. The houses have two or three rooms; generally have no windows and have no running water or inside plumbing. A few houses have batteries for radios or televisions and lighting is by kerosene lamps. The principal use of electricity would be for lighting, radios and in some cases cooking. The income of the village residents is low and other electricial appliances will not be introduced rapidly. The Tunisian National Power Agency (STEG) uses 300 watts per household as a planning number for villages. However, for a photovoltaic system, a figure of 150 watts or one-half of the conventional amount is used.

This value was selected to keep the cost of the system as low as possible, and still allow some lighting and other power uses. Also, because of economic conditions in the village, the people will probably not be able to afford much more electricity at the start. It is expected that STEG will establish a rate system and users will be required to pay for the electricity they use. Based on this the village of 60 houses could be served by a 9 peak Kw system. Assuring 4 hours operation per day and 2 days reserve, the battery storage should amount to 70 Kwh. Figure 10 is a schematic representation of the proposed village residential electricity system.

Figure 11

Schematic Representation of Major Components of Photovoltaic Electricity System for Household Uses

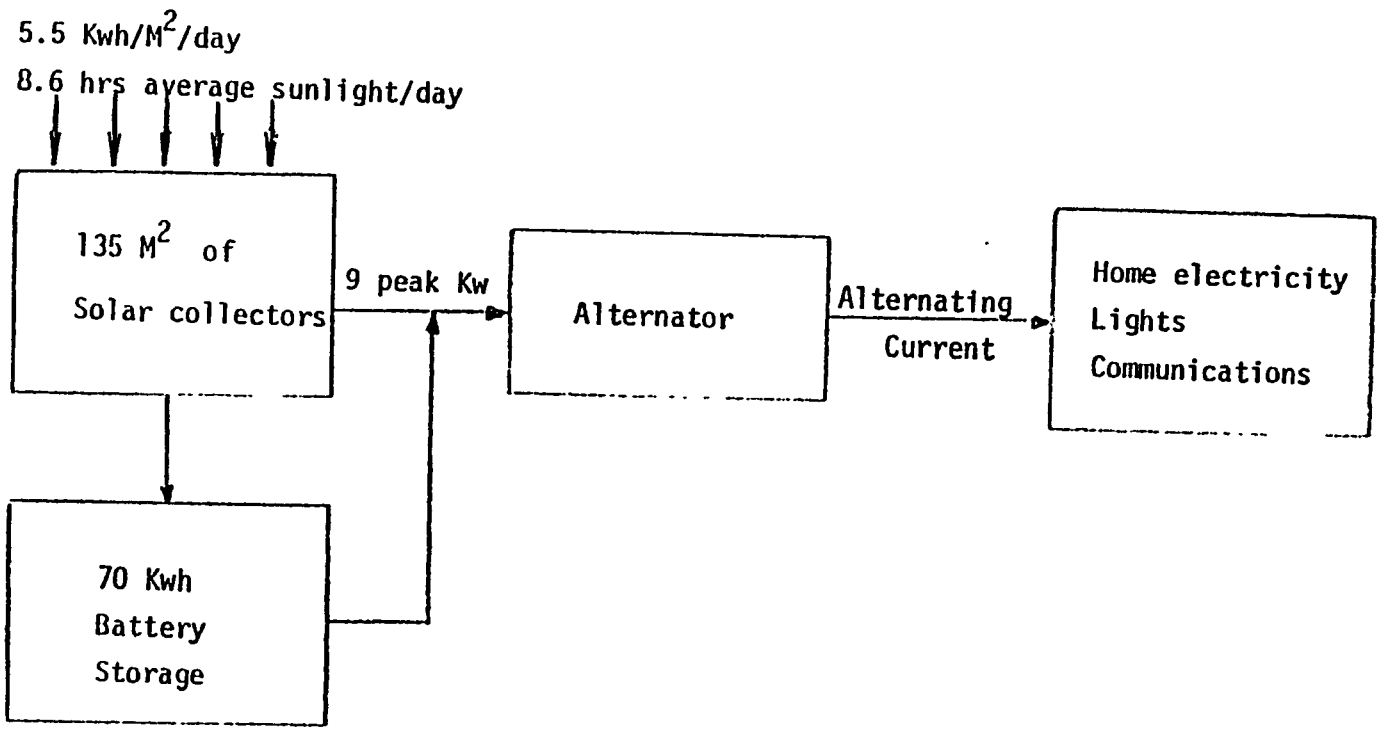

DEVELOPMENT SCIENCES INC.

4. Training

The introduction of this technology to Hasse El Frid implies some training at the project level. The training would take place beginning in Month 8 of the project, and would principally involve the farmers using the technologies in agricultural applications. If at all feasible, farmers should participate in the installation of the new energy sources on their farms; this will give them a chance to achieve hands-on familiarity at an early stage.

Agricultural use training will be divided into two stages. The first stage will be concerned with the techniques of inspection, cleaning, maintenance and adjustment techniques, for the photovoltaic power systems, pumps, filters, irrigation tubing, and windmills. This stage will last approximately six weeks, but will necessarily be staged according to the progress of installation. Beginning in the third week of this stage, the farmers will have to learn to use the new energy sources in connection with the designated agricultural uses. In fact, it is planned to have the Ministry of Agriculture, working through the Central Tunisia Authority, begin to sensitize the farmers to the agricultural changes which will have to be made as early as Month 3 of the subproject. Thus the second-stage training adverted to above will be a summary and reinforcement of information already discussed over a period of several months. The second stage will last six weeks. With the overlap between the stages, total time for this training will be two months.

In addition to the foregoing, special training will have to be offered with regard to the battery storage system. A local technician will be instructed by the assembly personnel in prevention of excessive current drain to the system, and also how to.transfer storage load capacity from one part of the total village system to another, to take advantage of available excess solar or wind generating power.

Conversations have been held with USAID Tunis about the possibility of requesting a Peace Corps volunteer to provide low-level technical assistance in these training areas throughout the life of the project. In such a case, this PCV would have to be trained by the assembly technicians during the start-up phase.

5. Evaluation

The agricultural applications subproject will be evaluated from the economic, social, technical and political viewpoints.

The economic evaluation will have to be based on increases in productivity and farm income, as measured from baseline data gathered during the design phase of the project. Because of the brief time which the team was able to spend actually at the site, it was not possible to collect all the

income and production figures needed, nor was it possible to select farms which would participate in the subproject. Once data are established, Ministry of Agriculture personnel will keep records of the levels of inputs (fertilizer, water, labor, etc.) and production of each of the crops. Market prices and costs associated with marketing will also be determined, so as to fix the increase in farm income associated with each technology's application on a farm.

Commercial uses will likewise need baseline data. This should be relatively easy to establish for food preservation and for machine repair. Of particular interest will be employment creation opportunities which may arise from increased economic activity (including cottage industry), though this is not a specific objective of the subproject. Biannual visits to the site should be made by a project monitor, to collate the agricultural data, and to gather the commercial data.

The social evaluation should measure the impact of the new technologies on the village. For this purpose, a rural sociologist should visit the village once each year, beginning with the period of introduction of the new energy sources, to conduct interviews with farmers, commercial persons, local officials and citizens. It will be important to detect unfavorable aspects of the technology introduction, particularly since certain persons will enjoy decided economic benefits as a result. It will also be useful to measure any increase in satisfaction of the inhabitants with their environment, after electricity is brought to the village.

Of special interest will be the changes wrought by different consumption patterns imposed by the technological limitations of the new energy sources, and also by limitations in capacity. Sowing and harvesting patterns will have to be adjusted, and availability of electricity will be restricted to the storage capacity of the system-aspects of electrification which would not obtain under traditional energy sources.

The technical functioning and maintenance of the energy sources and distribution system (as well as associated equipment such as pumps) is of major importance, and must be evaluated every six months. It is certain that some unanticipated problems will arise, with respect to maintenance, spare parts, and malfunctions of one sort or another. Likewise, the reliability of the systems - in the sense of their utility under site climatological and wind conditions and the demands for energy - must be included in the evaluation.

Finally, the reactions of the policymakers in Tunis to the project must be sought as site-specific experience is gained. The Ministries of Energy and Agriculture will be in close touch with the project, as will

the Central Tunisia Project managers. It is to be hoped that their reactions will be favorable, and that the subproject will indeed provide much practical information on the problems and prospects of renewable energy in a rural development setting.

All results of the evaluations should be integrated into series of followup reports, for the benefit of Tunisian and United States government officials. Results may be reported by the Government of Tunisia at a future international energy conference; this would be one way of achieving wider understanding of the uses of new forms of energy in developing countries.

6. Costs of Applications

The preparation of preliminary cost estimates for the eight technology applications required that a large number of assumptions concerning pricing, availability and standard sizing of commercially available units. These assumptions, wherever possible, were factored into the application design so that the components of each technology were selected to be sensitive to costs and commercial availability. The major additional assumptions used in calculating the cost of each application are shown in Table IX. Wherever possible the most current FOB factory price of an element was used. The table also contains one of the references which was used to collect base unit cost data for each major component of an application.

The unit cost data in Table IX was used to estimate the total technology application cost. This pre-engineering design cost estimate is summarized in Table X. The level of detail provided in Table X may be misleading. All estimates are rough and a more appropriate representation of the cost (based on the preliminary nature of the design) would be one cost for each application. However, because the estimate was developed by summing individual best estimates the summary table contains this level of detail. In addition to the technology costs for each application a contingency of approximately 10 percent has been included. This contingency will allow for cost increases, items not included and changes in the nature or expansions of one or more of the applications. The estimate of shipping costs is based on a gross weight and a 60 cents per pound surface and sea transport cost. The detailed design of all eight applications will require at least three person-months in the United States and one person-month in Tunisia. This design will also develop specification for the equipment and bidding/purchase documents. The operation and maintenance cost covers the salary and living cost for one full-time person for one year (possibly a Peace Corps volunteer) trained in wind and solar technology to monitor and maintain the systems.

There are a number of costs which are not covered in this estimate. These items do not include metering and distribution of electricity. Erection, foundation and supports for the components, wells, water distribution piping and labor are also to be supplied by the Tunisian Government. During the preliminary discussions with local, regional and national Tunisian government representatives there was interest in the provision of growth capacity in the system. It was suggested that the Tunisian Government might want to pay for additional capacity over what AID would supply. The cost for this and mechanisms which could be employed to facilitate this will be developed and discussed during the design phase of the project.

Table IX

Major Assumptions for Cost Estimating

Item	Price FOB USA	References
1. Windmill - (farm type)	$3000	1: pg. 78, 81
Tower	$1200 (10 M)	1: pg. 79
Pump	$1000 (estimated)	1: pg. 69
Well	---	*
2. Windmill - (electricity)	$3000/peak Kw**	2: pg. 6 - 12
Tower	$1000	Estimated
Alternator	$ 100/Kw	2: pg. 2-11
Battery	$ 50/Kwh	1: pg. 82
3. Solar Drip Irrigation -		
Photovoltaic	$10/peak watt	2
Plastic Pipe	33.3¢/meter	3
Variable Speed Pump	$1000	Estimated
Water Filter System	350 Dinars in Tunisia	Tunisian cost
4. Solar Electricity		
Photovoltaics	$10/peak watt	2
Pump	$1000	Estimated
Batteries	$50/Kwh	1: pg. 82
Alternator	$100/Kw	2
5. Greenhouse & Wind		
Windmill - farm type	$3000	1: pg. 78, 81
Pump	$1000	Estimated
Greenhouse		Estimated
Solar (air) collectors	$ 750	Estimated
6,7,8. Solar Photovoltaics	$10/peak watt	2
Batteries	$50/Kwh	
Alternator	$100/Kw	*
Distribution	---	*
Water	---	*
Electricity	---	*

*To be provided by Tunisians as part of their projects.

**Assuming approximately 30% efficiency of the windmill at average site wind speed the cost would be $10,000 per kw of useful energy.

1. Policy Analysis Division, Brookhaven National Laboratory, Irrigation in Less Developed Countries, March 1977.
2. Arthur D. Little, Inc., Distributed Energy Systems, a report prepared for the U.S. Department of Energy, June 30, 1978.
3. See Table V for reference (Rain Bird).

Table X

Estimated Major Subproject Costs

APPLICATION	ELEMENT	NUMBER	COST FOB USA	TOTALS
1. Two wind driven pumping systems for farms	Windmills	2	$6000	
	Towers	2	$2500	
	Pumps	2	$2000	
	Spare parts & tools	-	$2000	
	Miscellaneous components	-	$2000	
				$15000
2. Two wind driven electricity systems for farms	Windmills	2		
	Towers	2	$2000	
	Batteries	-	$1000	
	Alternators	2	$200	
	Pumps	2	$2000	
	Miscellaneous components	-	$2000	
	Spare parts & tools	-	$6000	
				$34000
3. Two solar powered drip irrigation systems for farms	Photovoltaic arrays	2	$8000	
	Pumps	2	$2000	
	Water filtration systems	2	$2000	
	Drip irrigation pipes	-	$3500	
	Miscellaneous components	-	$2000	
	Spare parts & tools	-	$6000	
				$24000

Table X (continued)

Estimated Major Subproject Costs

APPLICATION	ELEMENT	NUMBER	COST FOB USA	TOTALS
4. Four solar electric systems for farms	Photovoltaic array	4	$80000	
	Batteries	-	$4000	
	Pumps	4	$4000	
	Alternators	4	$800	
	Miscellaneous components	-	$4000	
	Spare parts & tools	-	$8000	
				$100000
5. Two greenhouse solar heating and wind powered systems	Greenhouses*	2	$20000	
	Windmill systems	2	$15000	
	Solar hot air systems	4	$3000	
	Miscellaneous components	-	$2000	
	Spare parts & tools	-	$3000	
				$43000
6. Solar derived electricity for public uses	Photovoltaic array	1	$40000	
	Batteries	-	$2000	
	Alternator	1	$4000	
	Miscellaneous components	-	$1000	
	Spare parts & tools	-	$4000	
				$51000
7. Solar derived electricity for commercial uses	Photovoltaic array	1	$65000	
	Batteries	-	$10000	
	Alternator	1	$1000	
	Miscellaneous components	-	$2000	
	Spare parts & tools	-	$6500	
				$85000

DEVELOPMENT SCIENCES INC.

Table X (continued)

Estimated Major Subproject Costs

APPLICATION	ELEMENT	NUMBER	COST FOB USA	TOTALS
8. Solar derived electricity for homes	Photovoltaic array	1	$90000	
	Batteries	-	$3500	
	Alternator	1	$900	
	Miscellaneous components	-	$2000	
	Spare parts & tools	-	$9000	
				$106000
Total Project**	Contingency	-	-	$50000
Transportation to project site	Packing and shipping to Tunis	-	-	$60000
Detailed engineering design of project	-	-	-	$100000
Operation and maintenance	Cost for full-time person***	-	-	$70000
Evaluation	Monitor and Sociologist			$20000
				$758000

*Assumes glass greenhouses. If plastic can be used the costs will be less.

**The contingency is included to allow for increases in costs, items not included and changes in or expansion of applications.

***This assumes U.S. technologists on site for two months during start-up and a trained Peace Corps volunteer on site for one year.

7. Benefits Analysis

The benefits are differentiated by subproject, as are the costs. Benefits also accrue from the total package as each integrated effort reinforces the others; all gain strength from the Central Tunisian Project. In addition to this variety of sources of benefits, there are different types of benefits. Some include traditional benefits of increasing agricultural productivity. Other less tangible benefits are included in the information gained to assist the transition away from fossil fuels. Still others include the use of energy issues as the subject area from which a "mature" relationship is being built with the government of Tunisia. This richness and complexity of anticipated benefits takes the analysis into a mix of quantitative and qualitative issues.

The first set of benefits associated with introduction of renewable energy technologies occurs with Subproject 1 in the village of Hasse El Frid both as a village site, and by extension to other rural areas where irrigation takes place far from electrification or where future diesel consumption will be limited by import restrictions. For the village itself, the benefits have already been described in general. The amenities that make life and work in the village rewarding to the inhabitants include a broad range of activities. We cannot in the time allotted for this effort quantify the increased income to the farmer who will be able to sell vegetables in the winter months. Nor can we conceptually satisfactorily quantify the improvement of patient care in a heated infirmary.(6) We can, however, approximate the increased yield per hectare for agriculture that benefits from irrigation and consequent crop changes, both in the village and as a demonstration for other villages.

Hasse El Frid is in Central Tunisia and is part of the general area where cropping patterns are slated to change in the direction of irrigated cultivation of better forage and new fruit and vegetable production. Since previous extensive analysis of this region has already been accomplished,(7) it is not necessary to change assumptions on which the Central Tunisian Project is based. Furthermore, the few wells introduced as part of an energy demonstration do not themselves constitute a disruption of agricultural and marketing patterns anticipated in the Central Tunisian Project. A similar pattern of costs and benefits is therefore applicable.

---

6. We can, to some degree, compare costs of achieving similar benefits. This will be done below.

7. Agricultural Development in Central Tunisia (U. S. Agency for International Development Contract AID/afr-c-1139, July 1978).
An Assessment of the Agricultural Potential of Central Tunisia (U. S. Agency for International Development, Contract AID/afr-c-1139, April 1978).
Small Holder Irrigation Development (U. S. Agency for International Development, Project Number 664-0312.3).
Irrigation a Partir de Puits de Surface (Republique Tunisienne, Secretariat d'Etat au Plan et a L"Economie Nationale).

Based on data from the Central Tunisia Project, the increases in yield by irrigation and changes in cropping patterns similar to those projected for Hasse El Frid are on the order of a nine-fold increase in farm family income.(8) Put soley in terms of increased yield of quintals of barley and wheat from irrigation, projections for improvements in the Central Tunisia Project area are on the order of 100 percent improvement in three years, with individual farmers improving their yields 400 percent or more.(9) The Tunisian government projections for a program of irrigation and cropping changes on 4,460 hectares to the north of this region also promise approximately a nine- to ten-fold increase in income.(10) Consistent with this order of improvement is Tunisian government analysis of costs of production increases in the private sector when changing cropping patterns from wheat to vegetables. These increases in cost range from 10 to 13 fold increases and presumably would not be undertaken by private sector investors unless there was an appropriate return.(11) The most recent source which indicates substantial return on irrigation and crop switching projects an internal rate of return on surface wells of 39 percent.(12)

In sum, macro data from several sources indicate a satisfactory economic return from investment in irrigation in Central Tunisia which is used to increase the yield of present crops and to introduce new crops to the region. The characteristics of Hasse El Frid do not vary greatly from this norm and since the objective of the subproject is to demonstrate the utility of solar energy, not add further to the rationale of the agricultural changes projected for Central Tunisia, the economic benefits of adding a few wells does not really constitute the justification for the project. An acceptable increase in agricultural productivity will occur, but that benefit does not justify the costs of $ 750,000 projected for the subproject budget.

Included in that budget are costs of early introduction of the technology before its marketplace justifications; training, evaluation and administrative personnel for national demonstration purposes in excess of site needs; back-up technical assistance and spare parts due to the innovative nature of the Subproject, and the remoteness and scale of the site which was picked to avoid conflicts with close-by electricity rather than for agricultural productivity.(13) The next step of analysis to be accomplished in an engineering

---

8. An Assessment of the Agricultural Potential of Central Tunisia, op. cit., p. 90.
9. Agricultural Development in Central Tunisia, op. cit., pp. 75 - 76.
10. Irrigation a Partir de Puits de Surface, op. cit.
11. See Tables in Appendix A developed by the Ministry of Agriculture.
12. Small Holder Irrigation Development, op. cit.
13. An alternative site visited by the team in Sers where the availability of groundwater and major agricultural expansion were more certain was rejected because (1) electrification was close by; (2) it was out of the Central Tunisian administrative structure; and (3) the farming was done in dispersed individual farms and did not provide the opportunity to demonstrate village uses of renewable energy.

study will reveal more precise costs, but there is no way that the agricultural productivity can suffice to justify the project. The benefits lie in meeting the additional objectives of the subproject.

Similarly, the technology selected to accomplish pumping, lighting, heating, and cooling is not the least cost for those functions. Central electrification and/or diesel power could serve this village with more power and economically more competitively. But the alternative energy objectives of the project would not be met by these sources so their use is irrelevant.

It is, however, not irrelevant to know what the margin of difference of costs are at today's prices, if only to let us know that we are consciously subsidizing renewable energy for policy purposes. The cost of a diesel pump is TD800 ($1,900), fuel and lubricants are estimated to be TD70 ($175) and annual maintenance TD ($190).[14] The national cost of fuel and lubricants is underreported for the subsidized cost to the farmer is reported to be one-quarter of the export price Tunisia can get for its oil on the world market.[15] There is an energy pricing policy to gradually remove this subsidy to more closely keep up with the inflation of world oil prices. Indeed, in the last five years, from 1975 to 1979, diesel fuel prices increased by 47 percent.[16] If we conservatively assume a similar rate of increase in the next ten years of life of the diesel pump, the cost to the farmer will approximately double by the end of the decade. This assumption still underreports the national cost of diesel oil for Tunisians will probably have still higher opportunity costs for oil exports in the future. Nonetheless a low annualized price for a diesel pump for shallow well use can be estimated at:

	10-Year Cost	Annual Cost
Capital Cost-Pump	$1,900	$190
Operating Cost - 10 Years	2,789	279
Maintenance Cost	1,900	190
TOTAL	$6,589	$659

This cost compares with the photovoltaic pump anticipated in comparable application at the four solar electric farm/systems at approximately $25,000 for a ten-year cost (Table X). The comparison is not entirely accurate for the projected farm application includes some electrification. If a generator were added to the diesel to make the services more comparable, the diesel price might double. At that price the photovoltaic pump/generator would still be twice that of the diesel. Thus, to provide early information about the utility of solar energy for village agricultural development, the subproject is probably paying about twice the price of ordinary and more proven technology.

14. Small Holder Irrigation Development, op. cit., p. 10.

15. This figure was mentioned orally by several energy officials in the government.

16. See table in Appendix B.

This ratio of twice the price for early experience constitutes the economic issue of the subproject. If such projects were delayed several years until the price of photovoltaics drops to the expected low of $1.00 a peak watt, then the project would have a simple economic justification. The policy issue is whether the additional cost today is worth the information gained.

The subproject cost differential is actually only grossly estimated here. Since a grant is anticipated, the cost of finance is not included. Since the Tunisian estimates of bringing residential and commercial electricity to Hasse El Frid and the neighboring area vary between $400,000 and $500,000 capital costs, we do not have accurate enough information to make a full comparison. In any case, central electrification would bring twice the capacity and perhaps increased reliability so that simple cost comparisons do not account for differences in level of service. The Tunisian capital cost estimate of $400,000 to $500,000 cannot be accurately compared to the $242,000 for the public, commercial, and residential ten-year cost (Table X). While the prohibitive cost of extending a line favors photovoltaic application, at some point a village scale diesel generator could be considered and that would no doubt compete successfully at today's prices with photovoltaic sources.

The issue is consistently one of paying now to find out how renewable energy can assist the path of development. The Tunisian situation is such that a good test can be found at this site and the team recommends that the additional price be paid to achieve early experience and knowledge about technical, economic, and social parameters that have major significance for developing countries in the future.

B. Subproject 2 - Energy from Municipal Waste

1. General Objectives and Expectations

In the initial DSI team visit to Tunisia (AID-DSAN-C-0059)[17] one of the principal findings was that there was a need for experience with evaluating and comparing alternative energy technologies and applications. The training in Subproject 3 will satisfy some of this need, however, actual experience in performing a tradeoff or cost benefit analysis is also necessary. In order to provide this, the DSI team identified problems and ongoing or about-to-start feasibility studies. The most appropriate subject identified was the ongoing study by the Tunis Municipal District conerning solid waste management in Tunis.

The general objective of this subproject is to assist the Ministry of Industry, Mines and Energy is developing a capability to perform tradeoff or cost benefit analysis for projects involving or considering alternative energy technologies and resources. The major expectations are that:

1) A portion of the ongoing municipal waste management study being conducted by the Tunis Municipal District can serve as the subject for a cost benefit analysis involving energy technologies and resources.

2) The study process will include at least two tasks in which a team from the Ministry of Industry, Mines and Energy can participate.

   a. Identification and evaluation of ways of solving Tunis' solid waste problems through application of energy technologies or through energy-related resources.

   b. Comparison of these solutions with others proposed and studied by the Municipal District team.

3) The participation of the ministry team in the Tunis municipal waste study will start to build the capability for conducting alternative energy cost-benefit or tradeoff analyses.

2. The Subject of the Analysis

At the present the Tunis Municipal District is conducting a study of Tunis' municipal waste. The first part of the study covers residential waste. The feasibility study ("Etude pour la Realisation des Installations Necessaires a l'Elimination des Ordures Menageres de la Regionale Tunis") indicates that additional sites and improved techniques for landfill should be adopted. Additionally, a pilot study to test garbage composting and its use on agricultural lands near Tunis is about to start. This study, possibly to be financed in large part by a World Bank Urban Project loan, should demonstrate the technical and economic feasibility of this approach for Tunis.

17. Tunisia Energy Study: A Cooperative Program in Alternative Energy Resources and Technologies, Oct. 1978.

While residential waste disposal techniques are under consideration, solutions for commercial and industrial wastes are not yet under study. A broad comparative look at paper, waste oil, other combustible materials, organics for biogass, etc., major components of Tunis' wastes, has not been initiated. Additionally, nonenergy related solutions have not been considered in detail nor compared with these involving energy creation or recovery. As a result of preliminary discussions with Mr. Kariem Fathi, an Engineer with the Tunis Municipal District and Mr. Houssef Bahri, Principal Engineer of the Ministry of Industry, Mines and Energy, agreement has been reached to cooperate on a joint study. The commercial and industrial wastes of Tunis will serve as the subject matter. This energy related study is a part of the package designed during the earlier DSI team visit and contributes directly to providing some of the types of assistance defined as necessary in the earlier study.[18] The site of the study is Tunis and thus a companion and balancing urban energy emphasis is added to the rural energy focus in Subproject 1. The study is principally directed towards developing a capability to study and compare alternative energy approaches and thus is is a companion and balancing training initiative. Finally, the subproject should improve the chances of selecting the optimum solution for Tunis' municipal waste problems.

3. Subproject Function Summary

The Energy From Municipal Waste subproject will involve the provision of funds for experts or a consulting firm to work with the Tunisians on the following items:

- Design an overall and integrated study program covering residential, commercial and industrial wastes.
- Identify the components of that program in which energy resources or technology are covered.
- Help form a Ministry of Industry, Mines and Energy study team (MIMES team) to work cooperatively with this Municipal District team.
- Prepare detailed work plans including cost and timing for the study tasks emphasizing those which will be performed by the MIMES team.
- Work as a part of the MIMES team in performing the tasks assigned to them.
- Work to develop standardized procedures which can be used in other energy technology/resource cost benefit studies.
- At the completion of the MIMES team work present a one-day seminar summarizing the processes and procedures developed during the subproject.

The study should be composed of at least three tasks. The first task will involve identification and evaluation of ways of solving Tunis' solid waste problems through application of energy technologies or through energy related

18. op.cit.

resources. The second task will involve a tradeoff or cost benefit analysis comparing these solutions and those developed by the Tunis Municipal District. The third task will involve a seminar at the end of the project. At this time it is difficult to be more specific than this and more detail will be developed during the design of the overall study.

4. Evaluation

The Energy From Municipal Waste subproject will be evaluated from two viewpoints. The first and most important evaluation criterion will be whether the process builds understanding of and capability in analyzing alternative energy resources and technologies. Success in meeting this criterion can only be indirectly measured. The indirect measure will be AID's, the World Bank's and the Tunisians' feeling of the value of the subproject after it has been completed. This feeling will be assessed through a written evaluation form.

The second criterion will be whether procedural or organizational changes are initiated in the Ministry of Industry, Mines and Energy as a result of this subproject. It is likely that an assessment of this criterion will only be possible several months after the subproject is completed.

5. Costs of the Subproject

The subproject will include the provision of specialists or a United States consulting firm. It is estimated that the first task will require 3.5 person months of effort from United States consultants. This effort in conjunction with efforts of the Ministry team should complete the identification and analysis of energy related solutions to the commercial and industrial waste problems in Tunis.

The second and third tasks are budgeted for 4.5 person months of United States consulting effort. Work in these tasks will include a comparative cost benefit analysis of all identified solutions, as well as development of standardized procedures for future tradeoff analyses. The third task will include a one-day training seminar to begin the institutionalization of the standardized procedures. Table XI contains a summary of the estimated costs for this subproject.

Table XI

Cost Estimate for Energy from Municipal Waste Subproject

Item	Number	Unit Costs	Total
1. Preparation of scope of work	15 person days	$400/day	$ 6,000
Travel	1 air & local	-	1,000
Per Diem	15 days	$60/day	900
2. Solution identification & analyses	70 person days	$400/day	28,000
Travel	Air and surface	-	1,000
Per Diem	100 days	$60/day	6,000
3. Tradeoff analyses	70 person days	$400/day	28,000
Travel	Air and surface	-	1,000
Per Diem	100 days	$60/day	6,000
4. Training & standard procedures preparation	20 person days	$400/day	8,000
5. Contingency	-	-	10,000
6. Total	-	-	98,000

C. Training in Alternative Energy Applications

1. Background

There is much interest in alternative, renewable energy sources in Tunisia, on the part of both policy makers, and second echelon technical personnel. This interest is found within the Ministry of Industry, Mines and Energy, the Ministry of Agriculture (Direction de la Production Vegetale); the Centre de Recherche du Genie Rurale; Societe Tunisienne de l'Electricite et du Gas (STEG); Ecole Nationale d'Ingenieurs de Tunis (ENIT); and Entreprise Tunisienne d'Activite Petroliere (ETAP). It is not, however, informed by a realistic appreciation and understanding of the technologies involved, their economics, and their practical application. Much of the information has been acquired informally by Tunisian officials attending various international conferences. Since generally only rather senior persons are able to attend such conferences, information tends to be concentrated at the top; there is little trickle down of information; and information may often be incomplete.

On the other hand, Tunisia possesses a cadre of engineers who are extremely well trained in traditional energy sources, and a growing number in nuclear technology. The Ministry of Agriculture has a number of able persons with background in hydrology, agronomy and agricultural economy. There is thus a basic stratum of technical and scientific ability which could easily absorb knowledge about renewable energy.

Tunisia officials discussed with the team the idea of a training course in renewable energy. It is widely known within the economic ministries that Tunisia's fossil fuel reserves will start declining within a decade; it is also felt that though nuclear energy is considered too expensive for Tunisia, and presents unknown hazards, nuclear is perhaps unavoidable. Renewable energy is looked upon as a partial solution to the energy dilemma, and it is felt that more understanding of it is needed.

2. Needs Analysis

The team feels that the need for training in renewable energy exists at two distinct levels. At the policy-maker level, there is a need to develop an appreciation of what renewable energy can contribute to Tunisia's future energy needs, as well as an understanding of present and projected costs. At the technician level, there is a need to educate young engineers, economists, and various development officials with a fairly complete understanding of the technologies, their costs, applications and manufacture. There is also a need at this level to furnish access to international sources of knowhow, so that Tunisia can remain abreast of the state of the art in each technology. The team found that while young engineers were familiar with publications, institutes and sources for traditional and nuclear technology, there was little or no similar knowledge for alternative energy.

3. Training Courses

Renewable Energy and Energy Policy

This course would be in the nature of a one-day seminar for about 12 of the most senior energy policymakers. The seminar would be held outside Tunis, so that the participants would be free from distractions to the maximum extent possible. The objectives of this seminar would be twofold:

1) to create an awareness of renewable energy and its applications;
2) to stimulate the inclusion of renewable energy in development planning and to solicit immediately ideas on its application to Tunisian energy needs.

Invited to participate in the seminar would be six or seven officials from the Ministry of Industry, Mines and Energy at the Deputy Director level or higher; two or three from the Ministry of Agriculture; and two each from the Ministry of Planning, STEG, and ENIT.

The seminar leader would be an expert in renewable energy technology from the United States, and in addition there would be one other American, an expert in energy planning. Balancing the foreigners would be two Tunisian participants, who would present brief papers. The general content of the seminar will be as follows:

A. Review of Tunisia's Energy Future
   1) Demand by Sector
   2) Supply (Fossil and Hydro)
      a) Sources
      b) Prices
   3) Supply (Nuclear)
      a) Sizing
      b) Cost
      c) Timing
      d) Safety

B. Alternative Renewable Energy Sources--Technology, Costs
   1) Solar Thermal
   2) Photovoltaic
   3) Biomas
   4) Wind
   5) Geothermal
   6) Energy Generation from Waste

C) Applications of Alternative Energy in Tunisia
   1) Present Applications
   2) Twenty-year Horizon
   3) Planning a Phase-in of Alternative Energy

The format would consist of four presentations (energy future, nuclear, alternative energy, and applications), followed by division of the group into three syndicates, each meeting to work on an alternative energy question. Finally, the rapporteur for each syndicate will report on the syndicate's conclusions, and a general summary will close the seminar.

Renewable Energy Technologies and Applications

The second training course will take place initially in Tunis, over a ten-day period, meeting three hours per afternoon, five days per week. Field demonstrations will take place in Central Tunisia over a final two-day period. There will be about twenty-five participants in the course, tentatively divided among agencies and ministries as follows:

Ministry of Mines, Industry, and Energy	5
Societe Tunisienne de l'Electricite et du Gaz	3
Ministry of the Plan	2
Ministry of Agriculture	4
ENIT	4
Centre de Rechereches de la Genie Rurale	3
District de Tunis	2
ETAP	2

1) Training Objectives

The objectives of this course are first, to provide a broad technical knowledge of six alternative energy sources which appear to have a future in Tunisia (biomass, solar thermal, photovoltaic, wind, firewood, waste); second, to illustrate through use of Tunisian data how such energy systems are designed and costed; third, to transmit an understanding of and appreciation for the multiple end uses to which such technologies can be put.

2) Methodology

The methodology used will be a mixture of traditional lectures on the technologies, using multimedia teaching aids (slides, video, alternative energy demonstration equipment, films); and workshops, designing and costing systems using Tunisian data. This phase will last eight teaching days, at three hours per day. It will be followed by a field demonstration of technology applications, at the site of the agricultural project described elsewhere in this paper. Course faculty will be the two American Experts who will have participated in the seminar on Renewable Energy and Energy Policy.

One of the features of this course is that each participant will be furnished extensive technical documentation on the various technologies, including, where appropriate, manufacturers' brochures and specifications, and descriptive material on testing and applications of technologies. A list of bibliographies and of American institutions and university and government programs dealing with alternative energy technologies will also

be furnished. Providing such information to each participant is done to bridge what is perceived by the team as a considerable gap in literature and sources of information within Tunisia. Engineers, managers, and scientists will be able to subscribe to journals, obtain books, and correspond with persons in the United States who are working in renewable energy fields.

3) Content

For each technology the following content will be provided:

a) Theoretical Basis
b) Materials
c) Design Elements
d) Actual Performance Standards
e) Current Availability: Sources and Prices
f) System Design Applications and Engineering
g) Current Applications and Problems
h) Research; Future of the Technology

Where feasible hardware or working models will be available on display, in addition to the field applications which will be visited at the end of the course.

4. Evaluation

Evaluation will be done in two phases.

a) Short-term Evaluation. Each participant will be asked to reply to several questions on a survey form, prior to taking the course. These questions will attempt to elicit attitudes toward and understanding of non-nuclear alternative energy sources for Tunisia. A follow-up survey will be made on the last day of the course, following the conclusion of the field demonstrations. Attitudinal changes will be measured, as will participants' increased understanding of the promise and problems of alternative energy sources. The follow-up survey will also seek anonymous comments and criticisms of the course itself: preparation and expertise of the trainers, usefulness of materials furnished, organization, etc.

b) Long-term Evaluation. Each participant will be contacted by letter one year following the date of the course. An attempt will be made, via questionnaire, to determine whether the participant is involved to any greater extent than previously with alternative energy. Position indications would be regular reading of technical journals, research performed, projects designed and submitted for funding, etc.

5. Desalinization

The team was repeatedly asked about the application of solar energy to large-scale desalinization projects. The interest in this centers on the

Gabes-Medenine-Ben Gardane coastal strip, and the use envisaged for desalinized water is irrigation. The team shared with the interested Tunisian officials its belief that the solar technology for large-scale production is largely experimental and that it is and will remain for the foreseeable future too costly. Furthermore, the team raised the question of the desirability of concentrating more population and cultivation in this area, rather than dispersing growth to central Tunisia, for example.

Despite this, Tunisian interest remains undampened, and the team concluded that it would be desirable to send a specialist to Tunisia to meet with officials from the Ministry of Industry, Mines and Energy; the Ministry of Agriculture; and ENIT. This specialist should describe the large desalinization programs which are currently in operation or in the design stage; he should visit the area with Agriculture officials, and judge the scope of the project which would be required, and provide a very rough cost estimate.

The total time in Tunisia of the specialist would be five days.

6. Fellowships

The team believes that three Tunisians should receive in-depth training in alternative energy technologies in the United States, so as to form a local resource base which can be drawn upon in future years. Such training should be about four months' duration, including a month spent visiting manufacturers' sites, and institutions other than the training location.

Training fellowships should be given to one person from each of the following: Ministry of Industry, Mines and Energy; ENIT; and STEG.

The University of Florida at Gainsville is considering setting up an energy training program which could accept the Tunisian trainees; Brookhaven is another feasible location. The conduct of training will include the physical theory upon which the technologies are based; manufacturing methods and materials; systems design; applications of technologies to development; and other subproject areas.

It will be possible to provide excellent training in a three-month period, if the trainees possess an engineering background and speak English. Ideally, trainees would be recent recruits to the staffs of the three institutions, and would be nominated for a major role in alternative energy. This is clearly possible in STEG, where planning for future energy provision is well underway, and where an informal nucleus of young engineers interested in new energy sources already exists. It is likewise possible within the Ministry, where the interest of the Chef du Cabinet would be translated into formalization of an alternative energy role. Within ENIT, a knowledgable faculty member could play an important consulting role to various government departments (e.g. the Departement de la Production Vegetale within the Ministry of Agriculture); in time, and as alternative energy begins to find wider application within Tunisia, the ENIT curriculum could reflect this in its courses.

Table XII
Cost Estimate for Training

A. Overseas Training

1) Renewable Energy and Energy Policy

2 persons x 2 days @ $400/day	$ 1,600	
Maintenance, 4 days @ $70	300	
		$1,900

2) Renewable Energy Technologies and Applications

Course and materials preparation 3 persons x 15 days @ $400/day	$13,500	
On-site management 1 person x 20 days @ $310/day	6,000	
Travel time, 4 person-days @ $400/day	1,600	
Course teaching and field work 2 persons x 10 days @ $400/day	8,000	
Report writing 1 person x 2 days @ $400/day	800	
Maintenance, 40 days @ $70/day	2,800	
		$32,200

3) Desalinization

1 person x 5 days @ $400/day	$ 2,000	
Travel time, 2 person-days @ $400/day	800	
Maintenance, 5 days @ $70/day	350	
		$ 3,150

4) Miscellaneous Costs (meals of participants, rental of projectors, printing, etc.)

	$ 5,000	
		$ 5,000

5) International Transportation

3 round trips U.S.-Tunisia @ $1,000	4,000	
		4,000
TOTAL OVERSEAS TRAINING		$ 46,250

B. In-United States Training

3 Fellowships x 4 months @ $2,500/month	30,000	
		$30,000
TOTAL TRAINING		$ 76,250

D. Relations Among Subprojects

1. The Value of Integration

The three subprojects are each independently designed and can be funded and timed with some flexibility. However, they can be mutually reinforcing and economies can be achieved through sharing personnel and building on experience. Therefore it is recommended that all three be funded and integrated.

The village agricultural subproject (1) is the centerpiece and provides experience with an array of technologies that would make the training project (3) more productive by providing experts and experience. If the training subproject uses the village as an example, the workshops will take on a greater realism. There are arguments to be made to have the training proceed before the introduction of technologies so that the impact of change will be more dramatic. The converse is also plausible for "hands on" experience is valuable after the technologies arrive. Since it may be two or more years before sufficient operating experience is available, the recommendation is not to delay the training longer than required to install the technologies, and to use them in the training workshops before any operating history is obtained. Personnel can be shared if the designers of the village system can also give their time at a workshop session as they end their stay.

The Tunis subproject (2) balances the overall program by providing an urban dimension. Furthermore, the best uses of waste are decided in a methodologically similar way and the effort is applicable to agricultural waste as well as the use of urban waste in the countryside. The work of the team on the Tunis subproject also provides material for the training subproject and can provide personnel as well. Integration of this subproject can therefore reap extra benefits.

In sum, shared methodologies, personnel, and the addition of realism can provide benefits if timing and funding are coordinated. It is recommended that all components of the AID program be integrated.

Last, the site was chosen to get into the administrative structure of the Central Tunisian Authority. This major development program for Tunisia is the focal point of AID efforts in the years to come. These subprojects have a great deal to offer the Central Tunisia Project. Much reliance on diesel fuel and central electricity is built into the design of the project. While that decision makes sense today, planners will have to take tomorrow's oil and solar prices into account. To prepare for the eventuality of prohibitive fuel costs and significantly lower solar costs, subprojects can be a source of information and highly applicable experience. In fact, discussions have been held with members of the Central Tunisia Project to apprise them of the renewable energy project. Dr. DeMongeot, the Director of the project, expressed an interest in considering the results of the energy program in two years when the innovative technology portion of the budget of the Central Tunisia Project becomes available for funding innovative efforts.

2. Costs Summary

The total costs of the three subprojects is estimated to be $932,260. It was assumed that the scheduling of the projects would allow for shared use of training personnel in all three subprojects, thereby achieving economies of travel and preparation time. Additional economies were assumed because the diverse technologies in the Agricultural Subproject would provide "hands on" experience for the Training Subproject. Two cost estimates are therefore provided below to help judge the separability of the subprojects.

Costs Summary Integrated Program		Cost Summary Separable Program	
Agricultural Applications	(1) $758,000	Agricultural Applications	$758,000
Municipal Wastes	(2) $ 98,000	Municipal Wastes	$108,000
Training	(3) $ 76,260	Training Including Technology	$ 96,260
TOTAL	$932,260	TOTAL	$962,260

Based on costs savings alone the decision to integrate is not supported. However, based on the benefit that the village will get more exposure and information generated if a trained group can experience its benefits and learn how to replicate it, the decision to combine Agricultural Applications (Subproject 1) with Training (Subproject 3) creates a strong argument in terms of integration. Of course a smaller publicity campaign could be added to the village subproject, but that contributes far less than professional training. Thus, the inclusion of the training subproject is highly likely to make the $750,000 far more useful.

Another paired comparison can be made between Subproject 2, Municipal Wastes, and Subprojects 1 and 3. There is little immediate connection between the urban and rural subprojects, except that the overall program is more balanced if both are included. Also, the information generated on alternate use of wastes in the ongoing and proposed additional study will have future applicability in agriculture. One trainer can probably be shared if the particular person selected has the appropriate breadth of skills.

The relation between Municipal Wastes and Training Subprojects involves elimination of direct duplication because the subject matter of the Municipal Waste Subproject is covered in Training. The costs for at least one trainer would have to be added to the Municipal Wastes Subproject if the more general Training Subproject were not included.

In sum, there are small marginal costs to separating subprojects, but substantial benefits are lost from Agricultural Subproject 1 if Training (3)

is not also funded. Systematic conclusions from Agricultural Applications (1) will not be drawn as well or with as much impact if the exposure is limited by not funding Training (3). While Subproject 2 is not as critical for integration or as cost sensitive, it can be accomplished with a 10 percent savings if it can use some of the expertise needed in the Training Subproject (3).

The nature of the overall project may require that a full-time project manager be hired for the first year of the project. The varied and special nature of the technologies and their applications and the project timing constraints are such that the regular AID Mission staff and the normal assistance from AID Headquarters staff may not be sufficient. The extra cost for a full-time project manager has not been included in the project budget. On the basis of this, reviewers of this project report should consider whether or not a full-time project manager is required. It is certain that the project could benefit from this addition; however, the existing project management arrangements in AID may be sufficient.

III. IMPLEMENTATION

The overall project will be phased such that each subproject is a separate entity capable of being implemented without either of the others. However the three subprojects will be scheduled such that pertinent work in one subproject can be used in another. This combination minimizes duplication but does not restrict progress in one project because another is eliminated or behind schedule. At this time it is anticipated that if all three subprojects are implemented some economies can be realized due to scale and elimination of duplication. The overall administration of the project at the USAID level in Tunis is a matter which remains to be discussed.

Within subprojects the following phasing is anticipated. Agricultural Applications will have three phases. Phase I will involve detailed subproject design and procurement and will require approximately 6 months. Phase II will include assembly and erection at the subproject site and startup. This should take two months. Phase III will involve project operation and monitoring for 16 months. The AID direct involvement is expected to be terminated by the end of FY81 due to changing emphasis in the overall AID program in Tunisia. M. Bougatef, Director of the Central Tunisia Project, has indicated a willingness to have the Project assume responsibility for the Agricultural Applications subproject, with the exception of the electrical wiring to houses and the setting of, and administration of electricity prices. STEG has agreed to assume responsibility for this.

The Tunis Energy from Waste Subproject involves two phases. The first phase involves working with the Tunis Municipal District and the Ministry of Industry, Mines and Energy to prepare a detailed work scope and timing schedule for a study of and a solution to the commercial, industrial and hazardous waste problem in Tunis. This phase will require two months. The second phase will involve performance of and payment for two tasks in the study. One task to be paid for and performed by the Ministry of Energy team will involve an evaluation of ways of solving the problem through application of energy technologies or through energy-related reuse. The second task will involve comparison of these solutions with other solutions proposed and studied by the municipal district team. The second phase will take 10 months. M. Youseff Bahri, Principal Engineer in the Ministry of Industry, Mines and Energy, will work with M. Kariem Fathi, of the District of Tunis, in the management of this subproject.

The third subproject, Training in Alternative Energy Applications, will be performed in four phases. The first phase will involve formation of the training team and preparation of materials. This phase will require four months. The second phase will include the overseas training. The first overseas course will include renewable energy and energy policies. The second course, renewable energy technologies and applications will be scheduled, if possible, for presentation after the agricultural subproject is underway. The third phase will cover fellowships for specialized training in the U.S. This phase will be scheduled following the first two phases.

The training subproject should take place within the Ministry of Industry, Energy and Mines, rather than within the University or any of the Institutes. This will be a novel undertaking for the Ministry, and at present, though conversations have been held with M. Youseff Bahri, no administrator has been designated. The current expectation is that the training will be under the supervision of ETAP within the Ministry. Confirmation should be done early during the design phase of Subproject 1.

Table XIII presents a detailed breakdown and timing schedule for each subproject. It should be noted that the subprojects are very tightly scheduled. Because of the need on both the Tunisian and United States Governments to commit funds as soon as is possible, the design phase, equipment procurement, installation and Subproject 1 start-up are given only the minimum time possible for accomplishment. If these activities are delayed, other timing and cost overruns may be experienced.

Table XIII
PROJECT IMPLEMENTATION SCHEDULE

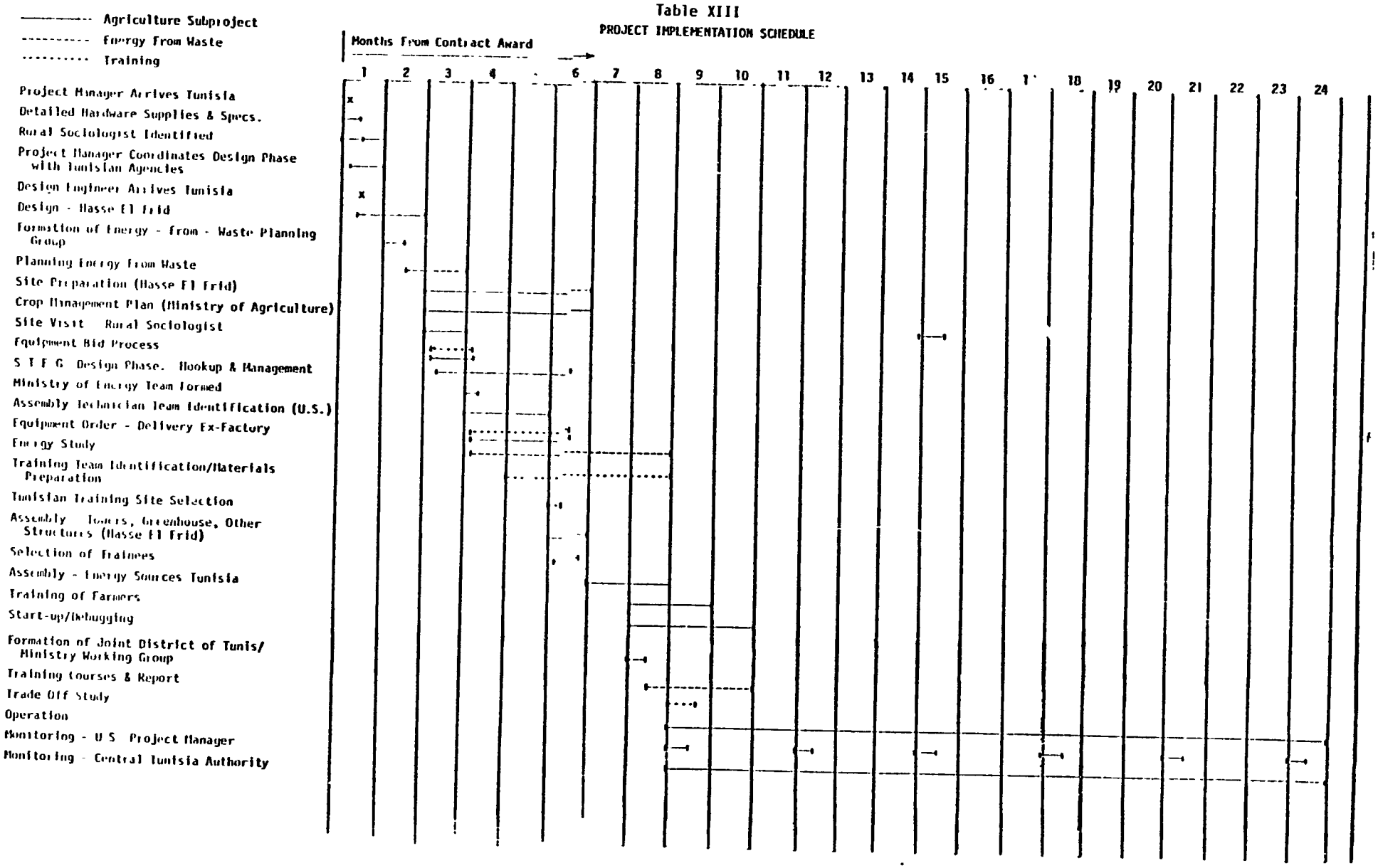

APPENDIX A

Typical Costs Associated with Grain and Vegetable Production

MONOGRAPHIE DES COUTS DE PRODUCTION DES CEREALES

- Secteur : Privé
- Région : Tunisie du Nord
- Taille de l'Exploitation : Groupe I : Superficie inférieure à 20 Ha.
- Degré de Mécanisation : Traction Animale
- Culture : Blé dur ordinaire

NATURE DES CHARGES	NORME A L'HECTARE	COUT UNITAIRE (DINARS)	VALEURS (DINARS)
1 - Semences en j	32,55	-	9,264
2 - Intrants			
- Super 16 en qx			
- Super 45 en qx	0,66	3,600	2,376
- Ammonitre en qx	0,91	5,000	4,550
- Désherbant	1,30	1,000	1,300
- Semences en qx	1,00	8,360	8,360
- Fumier			
- Eau TOTAL :			25,850
3 - Traction Animale			
- Préparation du Sol en j	9,68	1,300	12,584
- Façons diverses en j	4,19	1,300	5,447
- Récolte en j	3,30	1,350	4,600
TOTAL :			22,631
4 - Autres Frais			
- Assurances			2,639
- Valeur Locative			10,000
- Rémunération de l'Exploitant			7,000
- Amortissement bâtiments			(0,500)
- Intérêt sur Capital			4,447
TOTAL :			24,256
TOTAL DES CHARGES			72,757
RENDEMENT	6,90	7,600	52,440
COUT PAR QUINTAL		10,544	

// STRUCTURE DES COUTS DE PRODUCTION DES CEREALES

- Secteur : Privé
- Région : Tunisie du Nord
- Taille de l'Exploitation : Groupe I : Superficie inférieure à 20 Ha.
- Degré de Mécanisation : Traction Animale
- Culture : Orge

NATURE DES CHARGES	NORME A L'HECTARE	COUT UNITAIRE (DINARS)	VALEUR (DINARS)
1 - Emploi en j	25,84	-	8,535
2 - Intrants			
- Super 16 en qx			
- Super 45 en qx	1,15	3,600	4,140
- Ammoniaque en qx	1,43	5,000	7,150
- Desherbant	-	-	-
- Semences en qx	1,00	5,600	5,600
- Fumier			
- Eau TOTAL :			25,475
3 - Traction Animale			
- Préparation du Sol en j	7,82	1,300	10,166
- Façons diverses en j	3,60	1,300	4,680
- Récolte en j	2,74	1,300	3,562
TOTAL :			18,408
4 - Autres Frais			
- Assurances			2,537
- Valeur Locative			10,000
- Rémunération de l'Exploitant			10,680
- Amortissement bâtiments			(0,500)
- Intérêt sur Capital			4,056
TOTAL :			27,873
TOTAL DES CHARGES			71,655
PRODUCTION	11,32	5,600	63,443
CHARGES PAR QUINTAL		6,324	

NATURE DES CHARGES	TOMATE DE SAISON SEMIS : 15 Jan. 15 Fév. PLANTATION : 15 Mars 15 Avril RECOLTE : Début Juin Fin Oct. QUANTITE / Ha	VALEUR (D)
1. CHARGES DIRECTES		
1.1. Approvisionnements		
· Fertilisants		
Fumier	25 T	150,000
Ammonitre 33,5 %	400 Kg	20,000
Super 45 %	250 kg	9,000
Sulfate de potasse	200 kg	16,400
Produits phytosanitaires		
Traitement du sol	30 kg	6,600
Fongicide (Soufre)	100 kg	12,000
Insecticide	3 L	5,400
PLANTS	25.000	75.000
Irrigation	8000 m3	120,000
1.2. Travail		
Traction mécanique	15 h	32,100
Traction animale	15 j	22,500
Main d'oeuvre	250 j	500,000
Encadrement		50,000
S/T.....		819,000
2. AUTRES CHARGES		
Valeur locative	1 an	100,000
Intérêt sur capital (6 mois)	- 4 % S/T	32,760
3. FRAIS GENERAUX	- 10 % S.T	81,900
TOTAL ARRONDI ...		1 033
4. RENDEMENT (T)	30	
5. COUT (ARRONDI) D/T	34	

NATURE DES CHARGES	PRIMEUR DE SAISON SEMIS : 25 Déc. Fin Janvier PLANTATION : début Av. Fin avril RECOLTE : Début juil. 15 Nov.	
	QUANTITE / Ha	VALEUR (D)
1. CHARGES FIXES		
1.1. Approvisionnements		
Fertilisants		
Fumier	25 T	150,000
Ammoniaque 33,5 %	400 kg	20,000
Super 45 %	250 kg	9,000
Sulfate de potasse	200 kg	16,400
Produits phytosanitaires		
Traitement du sol	30 kg	6,000
Fongicide (Soufre)	-	-
Insecticide	2 L	3,600
EAUX	30.000	120.000
Irrigation	7.000 m3	105,000
1.2. Travail		
Traction mécanique	15 h	32,100
Traction animale	15 j	22,500
Main d'oeuvre	300 j	360,000
Encadrement		50,000
S/T.....		895,200
2. AUTRES CHARGES		
Valeur locative	1 an	100,000
Intérêt sur capital (6 mois)	4 % S/T	35,800
3. FRAIS GENERAUX	10 % S/T	89,520
TOTAL ARRONDI		1,[illegible]20
4. RENDEMENT (T)	Fort ; OT Moyen. ST	
5. COUT (ARRONDI) (D/T)	112 et 126	

NATURE DES CHARGES	MELON DE SAISON SEMIS : 15 Mars 15 Avril RECOLTE: 15 Juillet Fin Sept.	
	QUANTITE/ha	VALEUR (D)
1. CHARGES DIRECTES		
1.1. Approvisionnements		
Fertilisants		
Fumier	10 T	60,000
Ammonitre 33,5 %	200 kg	10,000
Super 45 %	150 kg	5,400
Sulfate de potasse	100 kg	8,200
Produits phytosanitaires		
Traitement du sol	30 kg	6,600
Fongicide (soufre-)	150 kg	18,000
Insecticide	20 kg	2,800
Semences	2,5 kg	25,000
Irrigation	4000 m3	64,000
1.2 Travail		
Traction mécanique	15 h	32,100
Traction animale	8 j	12,000
Main d'oeuvre	250 j	300,000
Encadrement	2	50,000
S/T		594,100
2. AUTRES CHARGES		
Valeur locative	1 an	100,000
Intérêt sur capital (6 mois)	4 % D/T	23,764
3. FRAIS GENERAUX	10 % D/T	59,410
Total arrondi		777,000
4. RENDEMENT (T)	15 T	
5. COUT (arrondi) D/T	52	

APPENDIX B

Petroleum Products -- Price Evolution

EVOLUTION OF PRICES AT THE PUMP
OF FINISHED PRODUCTS BETWEEN 1975 AND 1979

	1975	1976	1977	1978	1979
LPG	D 1.550/bottle of 13 kg.	D 1.550/bottle of 13 kg.	D 1.550/bottle of 13 kg.	D 1.700/bottle of 13 kg.	D 1.700/bottle of 13 kg.
High-Test Gasoline	D 165/liter	D 165/liter	D 180/liter	D 190/liter & D 205/liter	D 205/liter
Regular Gasoline	D 160/liter	D 160/liter	D 170/liter	D 180/liter & D 192/liter	D 192/liter
Lamp Oil	D 36/liter	D 36/liter	D 40/liter	D 40/liter & D 45/liter	D 45/liter
Diesel Oil	D 45/liter	D 45/liter	D 60/liter	D 60/liter & D 66/liter	D 66/liter

DEVELOPMENT SCIENCES INC.

APPENDIX C

Tunisian Energy Strategy

(Prepared by the Ministry of Industry, Mines and Energy)

REPUBLIQUE TUNISIENNE

MINISTERE DE L'INDUSTRIE, DES MINES ET
L'ENERGIE

APERCU SUR LA STRATEGIE DE L'ENERGIE DE LA TUNISIE

La Xème Conférence Mondiale de l'Energie tenue à Istambul en Septembre 1977 a été la "Conférence de la Prise de Conscience" :

- D'une part, du risque sérieux d'une grave crise de l'Energie vers 1990 , crise au sens non seulement d'une forte augmentation des prix, mais aussi et surtout d'une pénurie physique de l'offre pétrolière face à la demande croissante de l'Energie.

- D'autre part, de la nécessité impérieuse de promouvoir dès aujourd'hui le développement d'autres sources d'énergie de substitution au pétrole.

Par ailleurs, sur proposition de la Tunisie, la Xème Conférence Mondiale de l'Energie a accepté que la XIème Conférence qui se tiendra à Munich en 1980 traitera du thème "Les Problèmes de l'Energie dans le Tiers Monde". Pour la préparation de ce thème, un Comité ad hoc présidé par Monsieur Hassen BOUSSOFFARA (Tunisie) s'est réuni le 20 Septembre 1978 à DANFF (Canada) et a recommandé que les Commissions Nationales de l'Energie des Pays en voie de développement définissent leurs politiques énergétiques en relation avec les perspectives de développement économique et social de leurs pays et les transmettent au Comité ad hoc en vue de les intégrer dans le cadre de la stratégie mondiale de l'Energie.

.../...

C'est donc en vue de définir une politique énergétique de la Tunisie à très long terme compte tenu des contraintes extérieures et de contribuer à une meilleure approche d'une Stratégie Energétique tant au niveau des Pays du Tiers Monde qu'au niveau global du Monde, que le Ministère de l'Industrie, des Mines et de l'Energie a constitué une "Commission de la Stratégie de l'Energie" qui a élaboré le présent rapport.

Le présent rapport comprend 2 parties :

PARTIE I. : Rapport préliminaire

1°/ Introduction : Perspectives de l'Energie dans le monde.

2°/ Demande de l'Energie et Projection sur l'an 2000 et 2020.

3°/ Inventaire des ressources énergétiques disponibles et potentielles.

4°/ GAP entre la demande et la production et options de choix pour les énergies de substitution.

5°/ Plan de développement de l'Energie électrique y compris l'utilisation éventuelle de l'Energie nucléaire.

6°/ Promotion de l'Energie Solaire.

7°/ Recommandations Générales sur la stratégie de l'Energie et la conservation et l'économie de l'Energie en Tunisie.

PARTIE II.

Termes de référence pour l'étude du modèle de développement énergétique Tunisien 1980 - 2020.

P A R T I E I.

RAPPORT PRELIMINAIRE

I.- INTRODUCTION : Perspectives de l'Energie dans le Monde

Le Conseil éxécutif international de la Conférence Mondiale de l'Energie réuni à BANFF (Canada) du 18 au 20 Septembre a éxaminé la finalisation du rapport de la Commission de la Conservation de l'Energie et, après de larges discussions, l'a adopté.

Les conclusions d'un tel rapport intéressent les pays développés aussi bien que les pays en voie de développement. Ces conclusions portent sur la demande de l'Energie, la fourniture de l'Energie et la coopération énergétique.

En supposant un taux annuel de croissance économique de 4,2% pour les pays de l'OCDE, 5,7%/an pour les pays en voie de développement, et 3,3% pour les économies planifiées, avec cependant des coefficients d'élasticité des revenus appropriés, la demande serait répartie comme suit ;

38%	pour l'O C D E
32%	pour les pays à économies planifiées
40%	pour les pays en voie de développement.

La projection de la demande mondiale d'énergie à l'horizon 2020 comparée aux prévisions de la production montre clairement que la structure de la fourniture de l'Energie sera profondément modifiée.

Vers 2020 la fourniture annuelle d'énergie primaire pourrait atteindre 1000 Exajoules, soit approximativement le triple de la production actuelle.

La structure de cette fourniture serait schématisée ainsi :

En exajoules

RESSOURCES	1972	1985	2000	2020
- Pétrole	115	216	195	106
- Gaz	46	77	143	125
- Charbon	66	115	170	259
- Nucléaire	2	23	88	314
- Hydraulique	14	24	34	56
- Pétrole et gaz non conventionnels	0	0	4	40
- Solaire, géothermique Biomasse	26	33	56	100
TOTAL :	269	488	690	1000

La production de pétrole atteindra un maximum vers 1990 et déclinera alors de 40% à environ 10% de la Production Totale d'Energie Primaire.

La part du gaz sera limitée à 10 - 15%. Par contre le charbon et le nucléaire s'affirmeront pour 55%. L'hydraulique connaitra une croissance continue mais se maintiendra à un pourcentage à peu près constant de 5%.

Le pétrole et gaz non conventionnels extraits du sable bitumineux et des shistes pétrolifères pourrait participer pour 4% environ.

.../...

L'énergie solaire et la biomasse pourrait contribuer pour 7 à 8% de la production de l'énergie et la géothermie pour 2 à 3%.

L'étude montre en outre que si les pays de l'OCDE seront dépendants sur toute la période, de l'importation du pétrole, il deviendront exportateurs net de charbon après 2007. Par contre les pays en voie de développement qui jouissent d'un potentiel excédentaire jusqu'à l'horizon 2010 commenceront à devenir importateurs net à partir de cette date.

Ainsi la croissance de l'Economie Mondiale au cours de la période allant jusqu'en 2020 nécessite une action précoce pour, d'une part, la conservation de l'énergie et la lutte contre le gaspillage, et d'autre part, un développement vigoureux de tous les genres de production de l'Energie.

Par conséquent, eu égard aux perspectives de la demande croissante de l'énergie il est nécessaire de faire face à cette demande sans délai.

A cette fin, les pays développés sont unanimes pour apporter leur aide à la mise en valeur du potentiel énergétique, renouvelable ou non, des pays en voie de développement.

Cette mise en valeur libèrerait partiellement le pays concerné de la contrainte qu'éxerceront sur le développement économique les importations d'énergie.

En conséquence, les pays industrialisés et les pays en voie de développement ont un intérêt majeur à promouvoir la coopération énergétique pour la Recherche et l'exploitation des sources additionnelles et/ou alternatives d'énergie ainsi que pour son utilisation plus rationnelle, et de permettre un accès plus aisé, à long terme, des pays en voie de développement faiblement producteurs d'énergie au marché énergétique mondial.

.../...

2/ Demande de l'Energie et projection sur l'an 2000 et au delà.

DEMANDE DE PRODUITS PETROLIERS EN TUNISIE A L'HORIZON 2020

L'extrapolation des prévisions de la demande des produits pétroliers établies à l'occasion de l'élaboration du plan Directeur de stockage permet de déduire que la consommation tunisienne serait selon les différents taux de croissance économique comme suit

10^3 Tonnes

Année / Croissance économique	1980	1985	1990	1995	2000	2010	2020
7 %	3.020	4980	6900	9250	11500	15800	20100
5,9 %	2.600	4030	5360	7400	9400	13800	18100
4,9 %	2.200	3160	3950	5600	7200	11500	16000

3°- Inventaire des Ressources énergétiques disponibles -

La production pétrolière des gisements connue à ce jour, sans tenir compte des indices en cours d'appréciation rencontrés au Golfe d'Hammamet et de Gabès, est la suivante :

ANNEE	Gisements en cours d'exploitation - El Borma - Ashtart - El Itayem - Chouech Saïda - (en M.T.)	
	Production Totale	65 % de la Production revenant à l'Etat
1980	5,53	3,59
1981	5,16	3,35
1982	5,21	3,39
1983	5,01	3,26
1984	4,44	2,89
1985	3,94	2,56
1986	3,63	2,36
1987	3,16	2,05
1988	2,78	1,81
1989	2,66	1,73
1990	2,40	1,56
1991	2,07	1,35
1992	1,84	1,19
1993	0,97	0,63
1994	0,89	0,58
1995	0,85	0,55
1996	0,79	0,51
1997	0,73	0,47
1998	0,68	0,44
1999	0,63	0,41
2000	0,52	0,34
	63,64	35,02

4°- Différence entre la demande et la production d'hydrocarbures et option de choix pour les énergies de substitution

Dans l'hypothèse d'un taux de croissance de 5,9 % le déficit de la production des hydrocarbures des gisements en exploitation par rapport à la demande apparaît dès l'horizon 1983.

10^3 Tonnes

ANNEE	1980	1985	1990	1995	2 000	2 010	2 020
Demande	2.600	4.030	5.360	7.400	9 400	13.800	18.100
65 % de la Production	3.590	2.560	1.560	550	340	.	
CAP	+ 990	- 1.470	- 3.800	- 6.850	- 9.060	- 13.800	-18.100

Cependant la mise en exploitation des gisements off-shore en cours d'appréciation et de la Redevance sur le passage du gaz algérien vers l'Italie pourrait faire reculer l'échéance de 1983 à 1988 dans le scénario suivant :

1982 : mise en production de Didon et ISIS
1984 : " " de Byrsa
1985 : " " de Halk El Menzel et Yasmina
1987 : " " de MISKAR

En tout état de cause le déficit de la production pourrait être réduit grâce à :

a) la mise en oeuvre de nouvelles découvertes de gisements d'hydrocarbures

b) la mise en oeuvre de l'énergie nucléaire

c) l'utilisation de l'énergie solaire

d) l'utilisation de l'énergie éolienne

e) la recherche de l'exploitation de gisement éventuel de lignite

f) éventuellement la mise en oeuvre de l'énergie géothermique

5°- Plan de développement de l'Energie Electrique y compris l'utilisation éventuelle de l'Energie Nucléaire -

Les prévisions suivantes de consommation de l'Energie Electrique jusqu'à l'horizon 2 003 sont basées sur l'hypothèse moyenne de croissance suivante :

I977 - I98I	I5%
I982 - I986	I3,7%
I987 - I99I	8,4%
I992 - I996	6,7%
I997 - 2003	4,8%
I977 - 2003	9,3%

La consommation d'électricité passera de I,33I milliard de kWh en I977 à I2,500 milliards de kWh en 2 003

La puissance appelée passera de 320 MW en I977 à 2.820 MW en 2 003.

La puissance installée passera de 420 MW en I977 à 3.000 MW en 2 000.

<u>Les investissements passeront de 200 MD pour la quinquennie I977 - I98I à 2 000 MD pour I996 - 2 000 aux prix courants</u>

Les coûts correspondant aux conditions économiques de la France en I975 et aux tailles unitaires les plus performantes (900 MW pour le nucléaire, 700 MW pour le thermique - vapeur) sont de:

6 millimes/kWh pour le nucléaire
I0,84 " pour le thermique vapeur

.../...

Compte tenu de la hausse prévisible du prix du pétrole, l'optimisation des ressources conduira probablement la S.T.E.G. envisager l'inserion d'un réacteur nucléaire dans son programme de Production. L'étude de rentabilité devrait montrer les options à prendre en ce qui concerne la réalisation d'un réactour national et prendre en considération l'éventualité d'un projet au niveau régional.

LA PENETRATION DU NUCLEAIRE est possible suivant le schéma suivant :

Taille unitaire compétitive	Date de recours au nucléaire	Part du Nucléaire en l'an 2 000	
		Puis.installée	Production
200 - 250 MW	1990	35%	60%
350 - 400 MW	2000	25%	45%
600 - 700 MW	2010	0%	0%

6°)- Promotion de l'Energie Solaire -

Depuis la crise mondiale de l'énergie en 1973 qui a déclenché la hausse importante des prix du pétrole, tous les pays et surtout les pays industrialisés ont décidé de doubler d'effort en matière de recherche de nouvelles sources d'énergie.

C'est ainsi que la technologie d'utilisation de l'énergie solaire connaît actuellement un développement qui lui permettra d'occuper une place croissante pour la satisfaction des besoins énergétiques.

A ce jour les recherches entreprises pour mettre au point des techniques permettant l'utilisation de l'énergie solaire ont permis de substituer l'énergie solaire aux combustibles fossiles, et ce pour le chauffage de l'eau et des locaux.

Pour encourager l'utilisation de cette technologie et économiser les énergies importées les pays industrialisés ont adopté des politiques d'encouragement vis-à-vis des utilisateurs d'installations fonctionnant à l'énergie solaire.

La Tunisie de par l'ensoleillement intense dont elle bénéficie (2.800 à 3.600 heures par an) et de par ses ressources énergétiques d'origine fossiles limitées, se trouve par conséquent motivée pour adopter des ystèmes d'utilisation de l'énergie solaire dont la technologie est mise au point et l'économie est compétitive avec d'autres formes d'énergie .

Afin de favoriser une meilleure intégration en Tunisie des chauffe eau ~~électro~~- solaires et bénéficier convenablement de l'économie apportée par leur utilisation aussi bien au niveau des consommations de fuel et de GPL qu'au niveau du coût de production de l'énergie destinée au chauffage de l'eau, il est souhaitable d'entreprendre d'une façon plus élaborée, les études de marché nécessaires à une meilleure évaluation de la demande d'énergie destinée au chauffage de l'eau ainsi que celle des chauffe eau par type d'utilisation.

Ces études seraient à élaborer en collaboration étroite avec tous les organismes intéressés tels que la Direction de l'Industrie, la S.T.E.G, SACEM, Les Promoteurs immobiliers (S.N.I.T).

A la lumière des résultats de cette étude, un comité ad hoc groupant des représentants des directions de l'énergie et de l'industrie, S.T.E.G, ETAP complos ainsi que les constructeurs potentiels de chauffe eau solaires en Tunisie, arrêterait en accord avec le Ministère de L'Industrie, des Mines et de l'Energie et le Ministère des Finances les mesures nécessaires en matière de subventions à accorder, des dégrèvements fiscaux et des procédures y afférentes.

Un intérêt tout particulier devrait être accordé pour le choix d'un chef de file dans le but de faciliter les modalités de financement des installations solaires à l'instar de celles accordées aux bénéficiaires de chauffe eau électrique ou à gaz.

De telles mesures, une fois arrêtées, devraient être accompagnées d'un timing de réalisations et de conversions éventuelle des chauffe eau électriques et même à gaz actuellement existants afin que la Tunisie puisse bénéficier dans les plus brefs délais d'une meilleure utilisation de ses ressources énergétiques et de ce fait du maximum d'économie en devises.

A titre d'information :

- La consommation annuelle d'électricité et de gaz pour le chauffage, des locaux, le chauffage de l'eau sanitaire et le pompage est évaluée à 40.000 T. E.P.

- La consommation annuelle de fuel domestique est de l'ordre de 40.000T pour le chauffage des locaux.

7°/ Recommandations Générales sur la Stratégie de l'Energie et la Conservation de l'Energie en Tunisie

7.I. Stratégie de l'Energie

La Sous-Commission recommande qu'une étude du modèle de développement énergétique tunisien soit entreprise jusqu'à l'horizon 2 020.

Cette étude répond au triple objectif :

a) objectif national : Exploitation optimale des ressources nationales et actions à entreprendre pour y faire face

b) objectif de coordination des stratégies énergétiques des Pays en voie de Développement

Cette coordination sera assurée par le Comité ad hoc créé par la Conférence Mondiale de l'Energie.

c) objectif international : Aider à l'élaboration d'une Stratégie Mondiale de l'Energie au service du Nouvel Ordre Economique International.

D'ores et déjà la Sous-Commission recommande que sur le Plan National les actions suivantes soient entreprises, sans préjudice des conclusions de l'étude du modèle Energétique :

I) Poursuivre l'intensification de la Recherche pétrolière
2) Etudier le potentiel hydro-électrique de la Tunisie
3) Poursuivre l'examen des possibilités de l'extraction de l'uranium des phosphates.
4) Poursuivre la Recherche du lignite, et de l'Energie géothermique
5) Promouvoir l'utilisation de l'Energie Solaire et l'énergie éolienne
6) Se préparer pour l'insertion de l'énergie nucléaire dans le Plan de développement de l'Energie Electrique

7.2. Conservation optimale de l'Energie

Les conclusions de la Conférence Mondiale de l'Energie d'Istanbul en 1977 a montré à l'évidence que l'homme, d'ici la fin du siècle, doit envisager une diminution très accélérée et considérable des ressources pétrolières.

L'ajournement de la date critique du déclin de l'ère pétrolière jusqu'en 1990 dépend dans une large mesure, de la conservation optimale de l'Energie.

Les méthodes les plus efficaces d'optimisation de l'utilisation de l'énergie ont fait l'objet des recommandations suivantes :

1) Provoquer l'intérêt de tous pour une meilleure utilisation de l'Energie, par la publicité, l'information, les conseils et l'éducation. Encourager un style de vie plus économe.

2) Création de stimulants fiscaux encourageant une fixation correcte des prix des combustibles et de l'énergie

3) Réglements et normes concernant tous les appareils consommant de l'Energie, telles que les normes d'économies en ce qui concerne les véhicules, les vitesses maxima, les limitations de l'éclairage, du chauffage, de l'air conditionné, et les normes d'isolation des bâtiments.

- PARTIE II -

TERMES DE REFERENCE DE L'ETABLISSEMENT DU MODELE ENERGETIQUE TUNISIEN

I. OBJECTIFS DE L'ETUDE

1) Déterminer, compte tenu de différents scénarios de développement économique du pays, quels seraient les besoins de l'économie tunisienne en produits énergétiques jusqu'à l'horizon 2020 et en distinguant 1 ou plusieurs horizons intermédiaires.

2) Déterminer quelles sont les quantités de produits énergétiques non substituables et celles qui pourraient donner lieu à des choix d'ordre stratégique.

3) Définir des options de choix entre les différentes stratégies possibles et déterminer, compte tenu des hypothèses de développement envisagées, la stratégie optimale.

II. CONTENU DE L'ETUDE

1) L'étude doit commencer par évaluer les besoins en énergie primaire, compte tenu d'hypothèses de développement économique à expliciter. Ces besoins comprendront aussi bien les besoins en combustibles que les besoins en produits énergétiques utilisés comme matière première dans les différents secteurs.

2) Ces besoins en énergie primaire devront être ventilés suivant les différents secteurs utilisateurs.

3) Une analyse devra être faite par secteur pour déterminer sous quelle(s) forme(s) d'énergie secondaire ces besoins en énergie primaire pouvant être couverts.

.../...

4) Les différents choix économiques entre les diverses ressources d'énergie primaire accessibles pour satisfaire la demande en énergie secondaire, devront être examinées, et les différents paramètres techniques, économiques et financiers de conversion devront être déterminés.

5) Un inventaire sur l'ensemble de la période envisagée des différentes ressources d'énergie primaire nationales devra être établi.

6) Compte tenu à la fois des possibilités de substitution ou non d'une énergie à une autre, des ressources inventoriées et des différents paramètres de conversion, déterminer les différentes stratégies possibles et dégager parmi elles celle qui correspond à l'optimum économique.

7) Analyser ce que cette stratégie implique sur le plan des décisions à prendre, et notamment les décisions d'investissements.

III. METHODOLOGIE DE L'ETUDE

1) Il convient de confectionner un ou plusieurs modèles mathématiques pour répondre à toutes les questions posées ci-dessus. Ces modèles doivent être dynamiques en vue d'étudier l'enchainement des décisions et de leurs effets.

2) Les prix internationaux des différentes formes d'énergie ainsi que leur évolution doivent servir de base pour la définition de la stratégie optimale de couverture des besoins énergétiques du pays. En outre une analyse des prix intérieurs devra être faite en vue de faire ressortir leurs incohérences éventuelles et de proposer des solutions ainsi que des recommandations pour les faire évoluer dans le sens d'une plus grande cohérence interne et externe (avec les prix internationaux).

.../...

3) Des calculs de sensibilité devront être faits pour faire apparaitre quels sont les paramètres-clefs du système, c'est à dire les paramètres dont la variation engendre les plus grands changements sur la stratégie optimale.

4) Les problèmes de conservation de l'énergie et de lutte contre le gaspillage doivent également être examinés et inclus dans l'étude.

SCHE
ITG.

ED1/41
29.5.79

LE MARCHE DE L'ELECTRICITE

à moyen et long terme

GRAPHIQUE N° 1

RETROSPECTIVES GLOBALES 1966-1976

EVOLUTION EN GWh

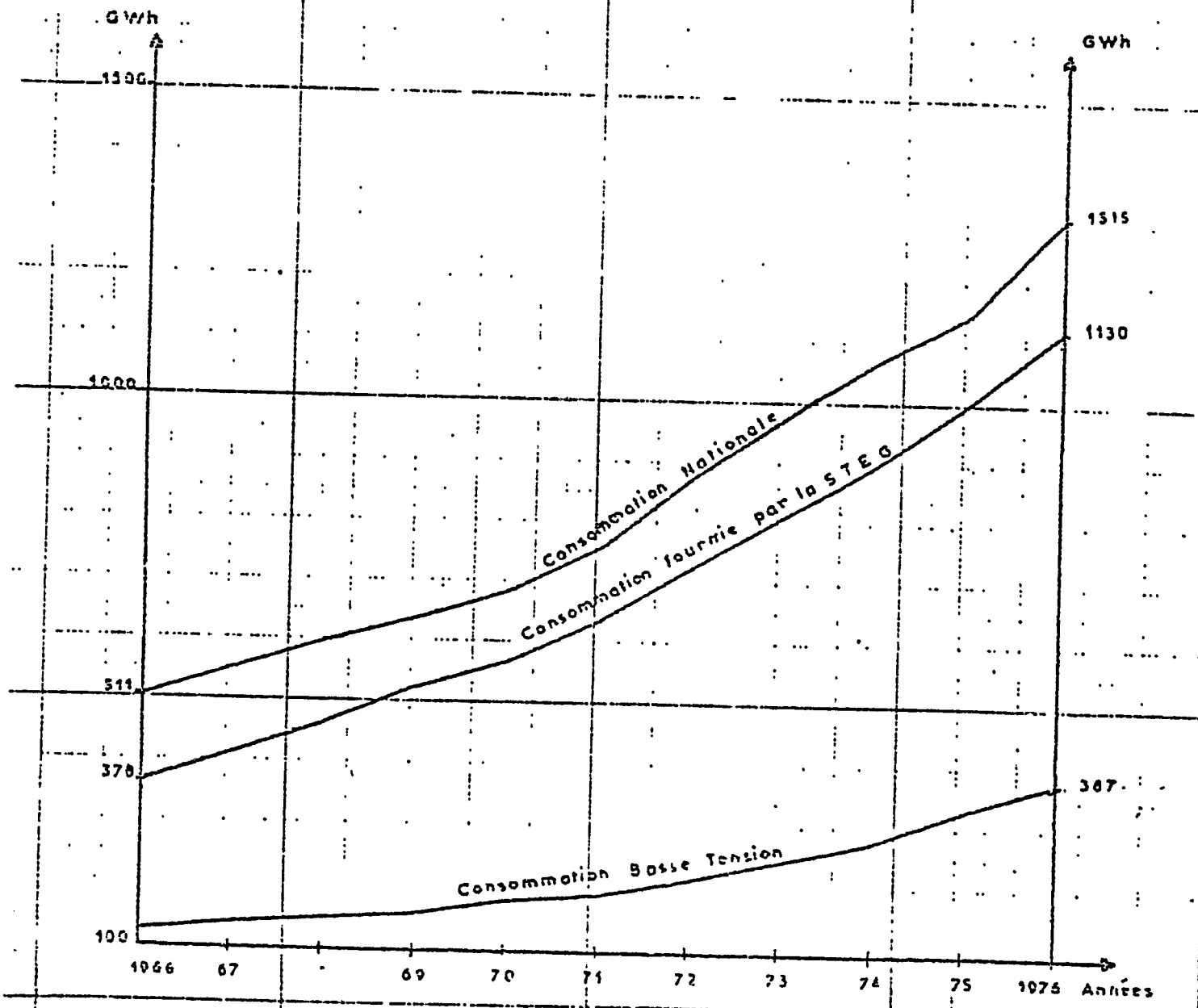

GRAPHIQUE N° 5

HYPOTHESES RETENUES POUR LA PREVISION DE CONSOMMATION D'ELECTRICITE FOURNIE PAR LA STEG

1977 _ 2003

Période	1977_1981	1982_1986	1987_1991	1992_1996	1997_2003	1977_2003
Hypothèse Forte	15 %	13.7 %	10.6 %	7.8 %	5.2 %	10 %
Hypothèse Moyenne	15 %	13.7 %	8.4 %	6.7 %	4.6 %	9.3 %
Hypothèse Faible	15 %	11.7 %	7.0 %	5.5 %	4.7 %	8.6 %

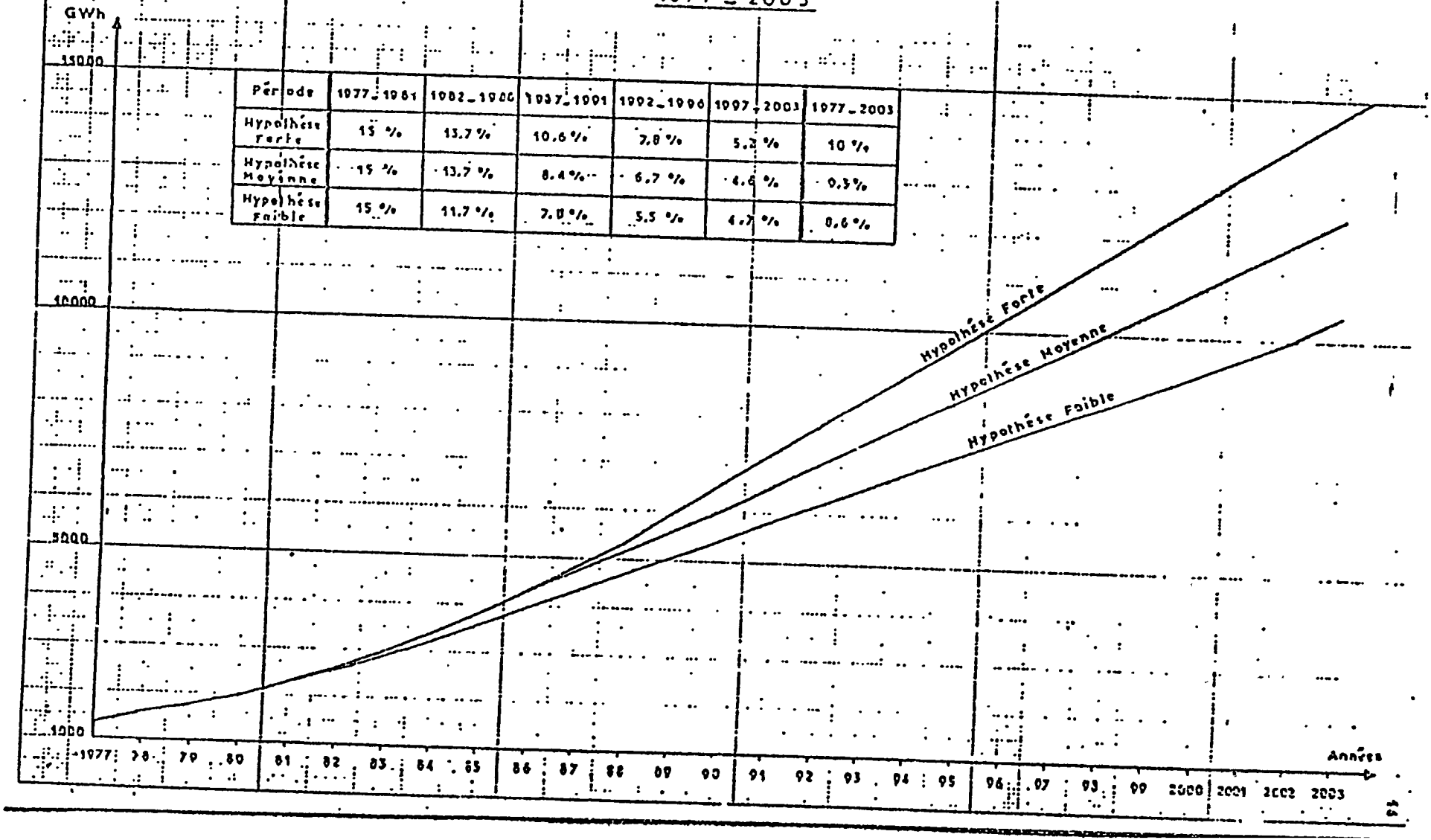

TABLEAU N°5

Hypothèses retenues pour la prévision de consommation d'électricité fournie par la STEG

(GWh)

1977 - 2003

Année	Hypothèse faible	Hypothèse moyenne	Hypothèse forte
1977	1331	1331	1331
1978	1570	1570	1570
1979	1750	1750	1750
1980	1990	1990	1990
1981	2280	2280	2280
1982	2570	2590	2590
1983	2870	2980	2980
1984	3200	3390	3390
1985	3550	3820	3820
1986	3970	4310	4340
1987	4300	4700	4800
1988	4800	5100	5300
1989	5000	5600	6000
1990	5300	6000	6500
1991	5800	6500	7200
1992	6200	7000	7800
1993	6500	7500	8500
1994	7000	8000	9000
1995	7300	8500	9500
1996	7600	9000	10500
1997	8000	9500	11000
1998	8500	10000	11700
1999	9000	10500	12500
2000	9200	11000	13000
2001	9500	11500	13500
2002	10000	12000	14000
2003	10500	12500	15000

• : Les chiffres de l'année 1977 sont réels.

TABLEAU N°9

PREVISION DE LA PUISSANCE MAXIMUM APPELEE

SUR LE RESEAU STEG (MW)

1977-2003

Année	Hypothèse faible	Hypothèse moyenne	Hypothèse forte
1977	320	320	320
1978	370	370	370
1979	420	420	420
1980	470	470	470
1981	540	540	540
1982	600	600	600
1983	670	700	700
1984	750	790	790
1985	830	890	890
1986	930	1020	1020
1987	990	1080	1100
1988	1100	1170	1220
1989	1150	1280	1380
1990	1220	1380	1500
1991	1330	1490	1660
1992	1410	1600	1780
1993	1480	1710	1940
1994	1600	1820	2050
1995	1660	1940	2170
1996	1730	2050	2400
1997	1800	2140	2480
1998	1920	2260	2640
1999	2020	2360	2820
2000	2050	2480	2920
2001	2140	2580	3040
2002	2260	2700	3160
2003	2360	2820	3330

NB. : Les chiffres de l'année 1977 sont réels.

ENVIRONNEMENT DU MARCHE DE PRODUCTION DE LA CEPG

1 - PUISSANCE INSTALLEE

ANNEE	1977	1985	1990	1995	2000
P.I. (MW)	420	1100	1750	2400	3000

2 - INVESTISSEMENTS (toutes activités industrielles)

PERIODE	1977-1981	1982-1986	1987-1991	1992-1996	1996-2001
FD courants	210	400	500	1 100	2 000

3 - PENETRATION DU NUCLEAIRE

Taille unitaire compétitive	date de recours au nucléaire	Part du nucléaire en l'an 2000	
		Puiss.installée	Production
200 - 250 MW	1950	35%	60%
350 - 400 MW	2000	25%	45%
600 - 700 MW	2010	0%	0%

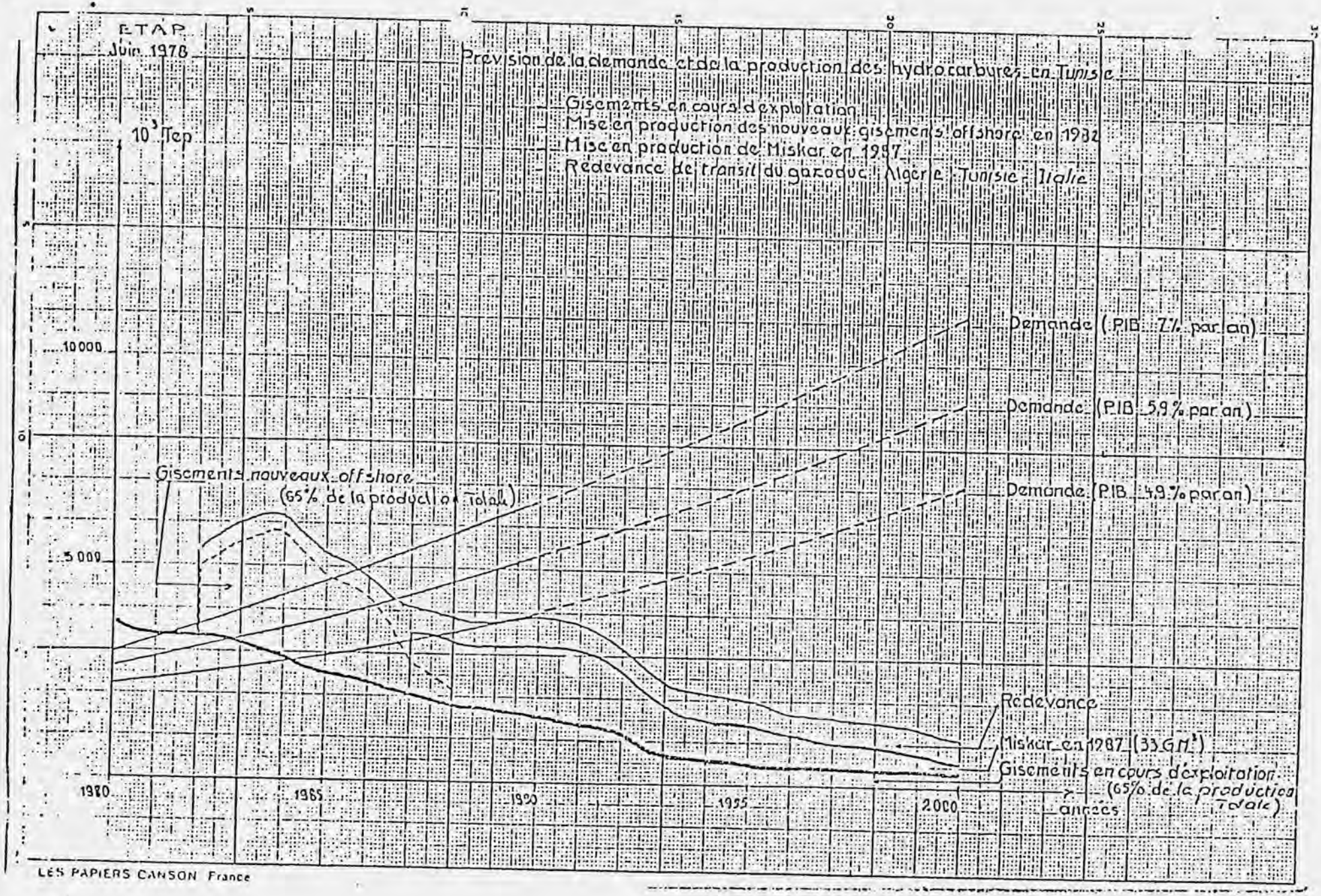

LES PAPIERS CANSON France

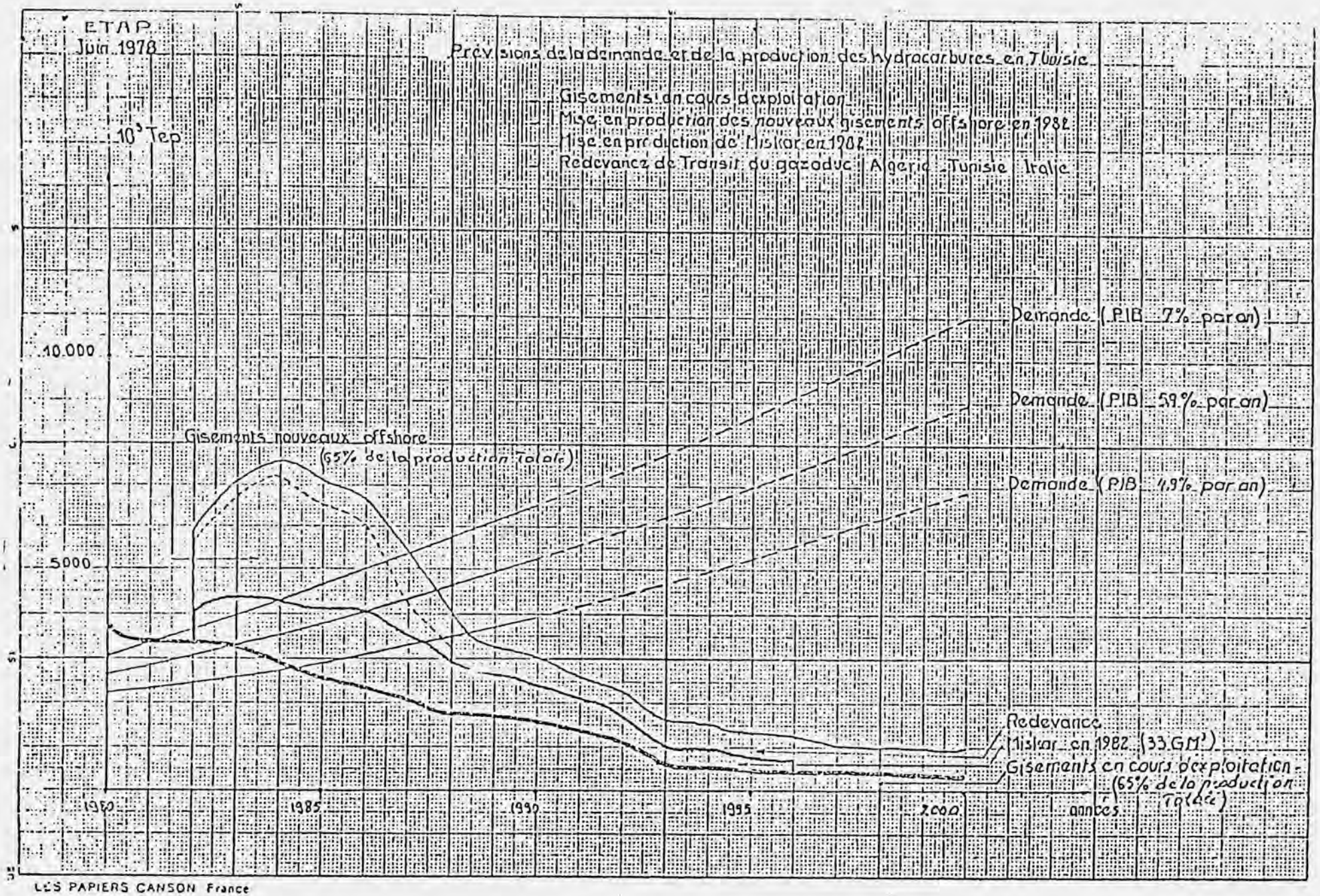

LES PAPIERS CANSON France

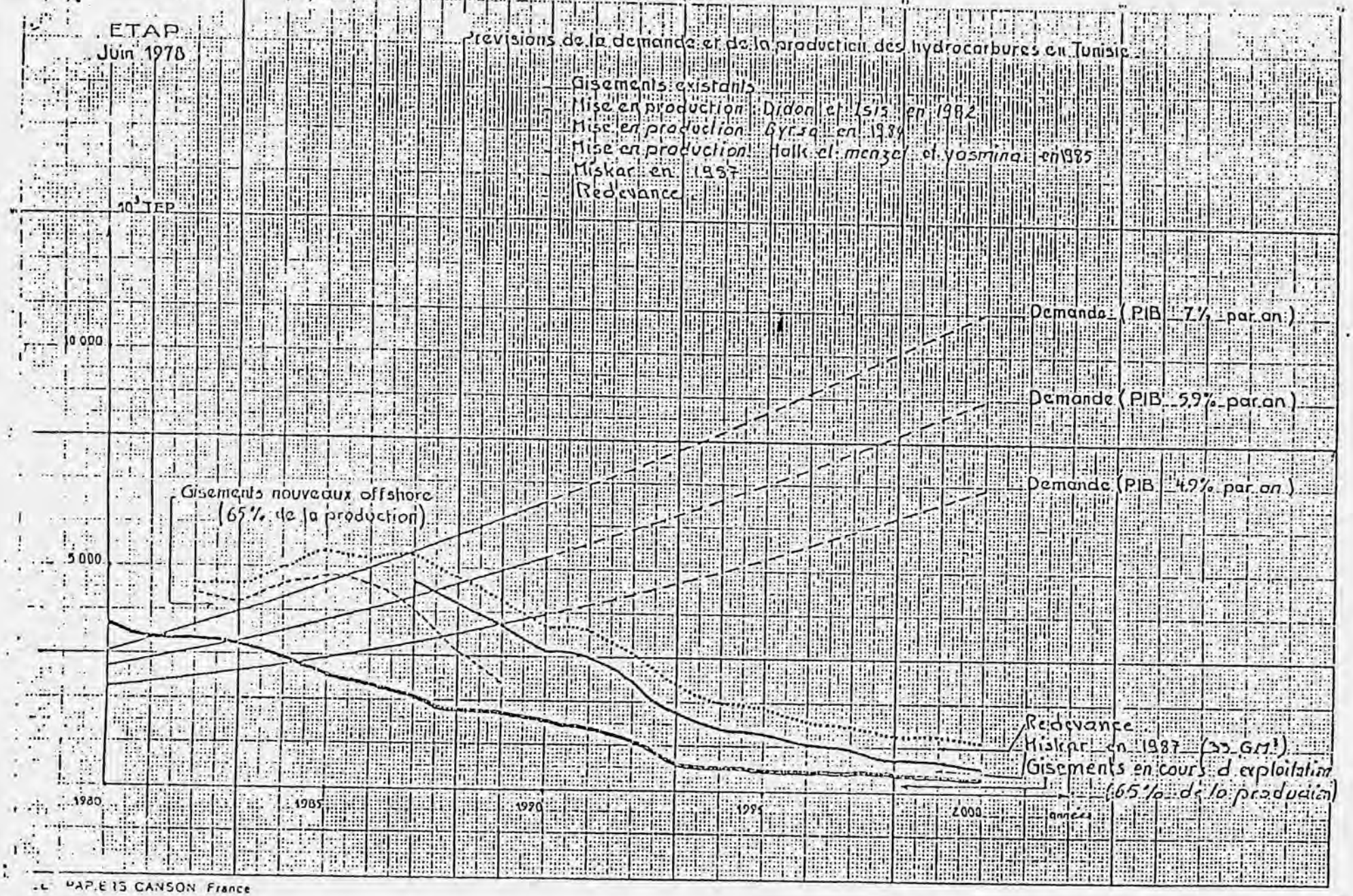

PAPIERS CANSON France

PREVISION DE LA PRODUCTION TUNISIENNE EN HYDROCARBURES

Millions de Tep

Années	Gisements en cours d'Exploitation 65%Prod. Totale	Miskar 33GM3	Gisements nouveaux off-shore * 65%Prod.Tot	Redevance	Total
1980	3,59				3,59
1981	3,35				3,35
1982	3,39	0,7	1,63	0,2	5,92
1983	3,26	1,12	2,28	0,37	7,03
1984	2,89	1,40	2,93	0,42	7,64
1985	2,56	1,59	2,28	0,61	7,04
1986	2,36	1,68	1,95	0,61	6,60
1987	2,05	1,40	0,65	0,61	4,71
1988	1,81	1,17	0,33	0,61	3,92
1989	1,73	0,93		0,61	3,27
1990	1,56	0,79		0,61	2,96
1991	1,35	0,61		0,61	2,57
1992	1,19	0,51		0,61	2,31
1993	0,63	0,37		0,61	1,61
1994	0,58	0,37		0,61	1,56
1995	0,55	0,19		0,61	1,35
1996	0,51	0,19		0,61	1,31
1997	0,47			0,61	1,08
1998	0,44			0,61	1,05
1999	0,41			0,61	1,02
2000	0,34			0,61	0,95
TOTAL	35,02	13,02	12,05	10,75	70,84

* Mise en production de tous les gisements en 1982

PREVISION DE LA PRODUCTION TUNISIENNE EN HYDROCARBURES

Millions de Tep

Années	Gisements en cours d'Exploitation 65%Prod. Totale	Miskar 33MG3	Gisements nouveaux off-shore 65%Prod.T*	Redevance	Total
1978					
1979					
1980	3,59				3,59
1981	3,35				3,35
1982	3,39		1,63	0,2	5,22
1983	3,26		2,28	0,37	5,91
1984	2,89		2,93	0,42	6,24
1985	2,56		2,28	0,61	5,45
1986	2,36		1,95	0,61	4,92
1987	2,05	0,7	0,65	0,61	4,01
1988	1,81	1,12	0,33	0,61	3,87
1989	1,73	1,40	[illegible]	0,61	3,74
1990	1,56	1,59		0,61	3,76
1991	1,35	1,68		0,61	3,64
1992	1,19	1,40		0,61	3,20
1993	0,63	1,17		0,61	2,41
1994	0,58	0,93		0,61	2,12
1995	0,55	0,79		0,61	1,95
1996	0,51	0,61		0,61	1,73
1997	0,47	0,51		0,61	1,59
1998	0,44	0,37		0,61	1,42
1999	0,41	0,37		0,61	1,39
2000	0,34	0,19		0,61	1,14
TOTAL	35,02	12,83	12,05	10,75	70,65

* Mise en Production de tous les gisements en 1982.

PREVISION DE LA PRODUCTION TUNISIENNE EN HYDROCARBURES

Millions de Tep

Années	Gisements en cours d'Exploitation 65%Prod. Totale	Miskar 33MG3	Gisements nouveaux * off-shore 65%Prod.Tot.	Redevance	Total
1978					
1979					
1980	3,59				3,59
1981	3,35				3,35
1982	3,39		0,98	0,2	4,57
1983	3,26		0,98	0,37	4,61
1984	2,89		1,63	0,42	4,94
1985	2,56		2,28	0,61	5,45
1986	2,36		2,28	0,61	5,25
1987	2,05	0,7	1,95	0,61	5,31
1988	1,81	1,12	1,30	0,61	4,84
1989	1,73	1,40	0,65	0,61	4,39
1990	1,56	1,59		0,61	3,76
1991	1,35	1,68		0,61	3,64
1992	1,19	1,40		0,61	3,20
1993	0,63	1,17		0,61	2,41
1994	0,58	0,93		0,61	2,12
1995	0,55	0,79		0,61	1,95
1996	0,51	0,61		0,61	1,73
1997	0,47	0,51		0,61	1,59
1998	0,44	0,37		0,61	1,42
1999	0,41	0,37		0,61	1,39
2000	0,34	0,19		0,61	1,14
TOTAL	35,02	12,83	12,05	10,75	70,65

* Mise en production de Didon - Isis en 1982
Mise en production de Byrsa en 1984
Mise en production de Halk El Menzel et Yasmina en 1985.

COMMISSION NATIONALE DE LA STRATEGIE

DE L'ENERGIE JUSQU'A L'HORIZON 2020

MM.-	- Hassen BOUSSOFFARA	: Chef du Cabinet de Monsieur le Ministre de l'Industrie, des Mines & de l'Energie
	- Mekki ZIDI	: Président Directeur Général de l'Office National des Mines
	- Amor ROUROU	: Président Directeur Général de l'E.T.A.P.
	- Mohamed Ali BEN YOUSSEF	: Directeur S.E.P.A.
	- Mokhtar LATIRI	: Président Directeur Général de la S.T.E.G.
	- Khelifa KAROUI	: Directeur de l'Energie
	- Mustapha DELLAGI	: Président Directeur Général de la SITEP
	- Ahmed BEN KHELIFA	: Président Directeur Général de la S.T.I.R.
	- Sadok BAHROUN	: Président Directeur Général du C.N.S.I.
	- Mahmoud LADJIMI	: Président Directeur Général de la S.H.E.P.
	- Belgacem MEZNI	: Directeur à L'E.T.A.P.
	- Sadok RABAH	: Directeur à la S.T.E.G.
	- Kemal REKIK	: Directeur à la S.T.E.G.
	- Mohamed DAYA	: Président Directeur Général de la S.I.C.C.
Mme	- Jaouida AMMADI	: Président Directeur Général de AMMASOL
MM	- Rachid AZOUZ	: Ingénieur-Conseil - COMPLES -

APPENDIX D

Research Paper--Photovoltaic-Powered Drip Irrigation

REPUBLIQUE TUNISIENNE
MINISTERE DE L'AGRICULTURE
CENTRE DE RECHERCHE DU GENIE RURAL
B.P n°10 - ARIANA - TUNISIE

II COLLOQUE INTERNATIONAL SUR LES ENERGIES NOUVELLES
20-25 Novembre 1978 - RABAT - MAROC

L'AUTOMATISATION DE L'IRRIGATION PAR LA COMBINAISON DU POMPAGE SOLAIRE ET DU SYSTEME GOUTTE A GOUTTE .-

Par S. EL AMAMI

SOMMAIRE

I. - Introduction

II.- But

III.- Matériels et Méthode

IV.- Résultats sur l'E.T.P. en fonction de l'Energie solaire

V. - Conclusion

VI.- Bibliographie

VII.- Annexes : Tableau I : Rayonnement global de quelques stations en Tunisie

Tableau II: E.T.P. mesurée en Tunisie.

COLLOQUE INTERNATIONAL SUR LES ENERGIES NOUVELLES

20-25 Novembre 1978 - RABAT - MAROC

L'AUTOMATISATION DE L'IRRIGATION PAR LA COMBINAISON DU POMPAGE SOLAIRE ET DU SYSTEME GOUTTE A GOUTTE

Par S. EL AMAMI

I.- INTRODUCTION

La mobilisation des eaux de la nappe phréatique représente la base du secteur irrigué en Tunisie. Cette mobilisation s'est intensifiée durant la dernière décennie pour des raisons socio-économiques. Le nombre de puits de surface est passé de trente mille à quarante mille en cinq ans (1972-77).

L'extension a touché les régions de l'intérieur dont la pratique de l'irrigation est relativement récente (Kairouan, Sidi-Bouzid, le Kef ...) Dans ces régions la densité des puits reste faible et ne dépasse pas cinq puits au kilomètre carré. Par contre cette densité a augmenté dans les zones traditionnellement irriguées (Le Cap-Bon, région de Tunis, Sahel...) en passant de 30 à 45 puits au kilomètre carré.

Dans ces régions littorales la motorisation du pompage est ancienne. Pour l'ensemble de la Tunisie la moitié des puits est équipée actuellement en moteur Diesel de faible puissance.

Récemment, dans le cadre du programme du développement rural, l'électrification du pompage a touché le quart des puits de surface.

Cette électrification est surtout concentrée dans les zones littorales à structure villageoise et possèdant une forte densité de puits.

Le plan quinquennal (1977-81) prévoit l''extension de l'électrification pour englober la moitié environ du nombre total des puits.

Le coût global de ce programme est estimé à 23 millions de Dinars (50 millions de dollars) pour exploiter une source d'énergie conventionnelle menacée du pénurie dans les dix années qui viennent.

Dans cette note est exposé une autre alternative intégrant les technologies nouvelles adaptées à l'infrastructure hydraulique dispersée et décentralisée pouvant réaliser une économie d'eau et d'énergie et une automatisation simple de la pratique de l'irrigation. Sur le plan économique, il semble même, comme il est démontré dans la conclusion, que le pompage solaire sera à moyen terme concurentiel par rapport à l'option électrification classique.

II.- BUT

En admettant que les objectifs du Plan quinquennal concernant l'électrification des zones rurales soient réalisés, il reste toujours des zones à faible densité de puits et à habitat dispersé qui ne seront pas touchés par ce programme et qui se débattent actuellement dans des problèmes d'approvisionnement en carburants e d'entretien posés par la motorisation par le Diesel.

Le but de l'expérimentation démarrée cette année par le Centre de Recherche du Génie Rural est de tester les techniques de pompage solaire dans ces zones isolées.

Cette utilisation ne pourra être rentable que par l'intégration d'une technologie d'irrigation permettant une meilleure valorisation du mètre cube d'eau pompée. Le système goutte à goutte, en économisant l' eau, permettra de multiplier par trois la superficie irriguée. En effet un litre par seconde (1 l/s) d'eau pompée qui ne peut irriguer qu'un hectare avec les moyens conventiels permettra, en introduisant le système goutte à goutte, d'en irriguer trois.

Cette intégration du système goutte à goutte permettra enfin une automisation de l'irrigation.

Appliquée sur les dix mille puits dispersés des régions arides cette combinaison pourrait impulser le secteur irrigué et faire doubler la superficie irriguée actuellement par l'ensemble des quarante milles puits existants.

III.- MATERIELS ET METHODE

L'irrigation goutte à goutte a fait l'objet depuis cinq ans de multiples essais commencés sur les principales espèces arboricoles méditerranéennes (oranger, olivier, pistachier, palmier-dattier) et étendue récemment aux cultures maraîchères de primeur.

Les premiers résultats (S. EL AMAMI et N. BEN MECHLIA 1976) ont permis de déterminer le taux de rationnement sur agrumes qui atteint le quart de l'E.T.P. gazon. Cette technique supprime la notion de fréquence et de cadence et permet l'irrigation permanente et quotidienne en fonction des besoins en eau de la plante déterminés expérimentalement à partir de la référence E.T.P. mesurés sur gazon.

Dans la condition de la Tunisie centrale à la station expérimentale de Hendi Zitoun (3000 heures d'ensoleillement par an), une pompe solaire fut installée. Elle comprend 5 panneaux de 1,8 m2 chacun de 6 modules de cellules photovoltaîques type SOLAR POWER développant une puissance crête de 600 watts montés sur un support métal que à orientation manuelle variable en fonction des saisons et un groupe motopompe ALTA type MO 12-25 (hauteur manométrique 15 mètres 1700 t/mm).

Schéma-type d'installation pompage solaire et irrigation goutte à goutte sur puits de surface

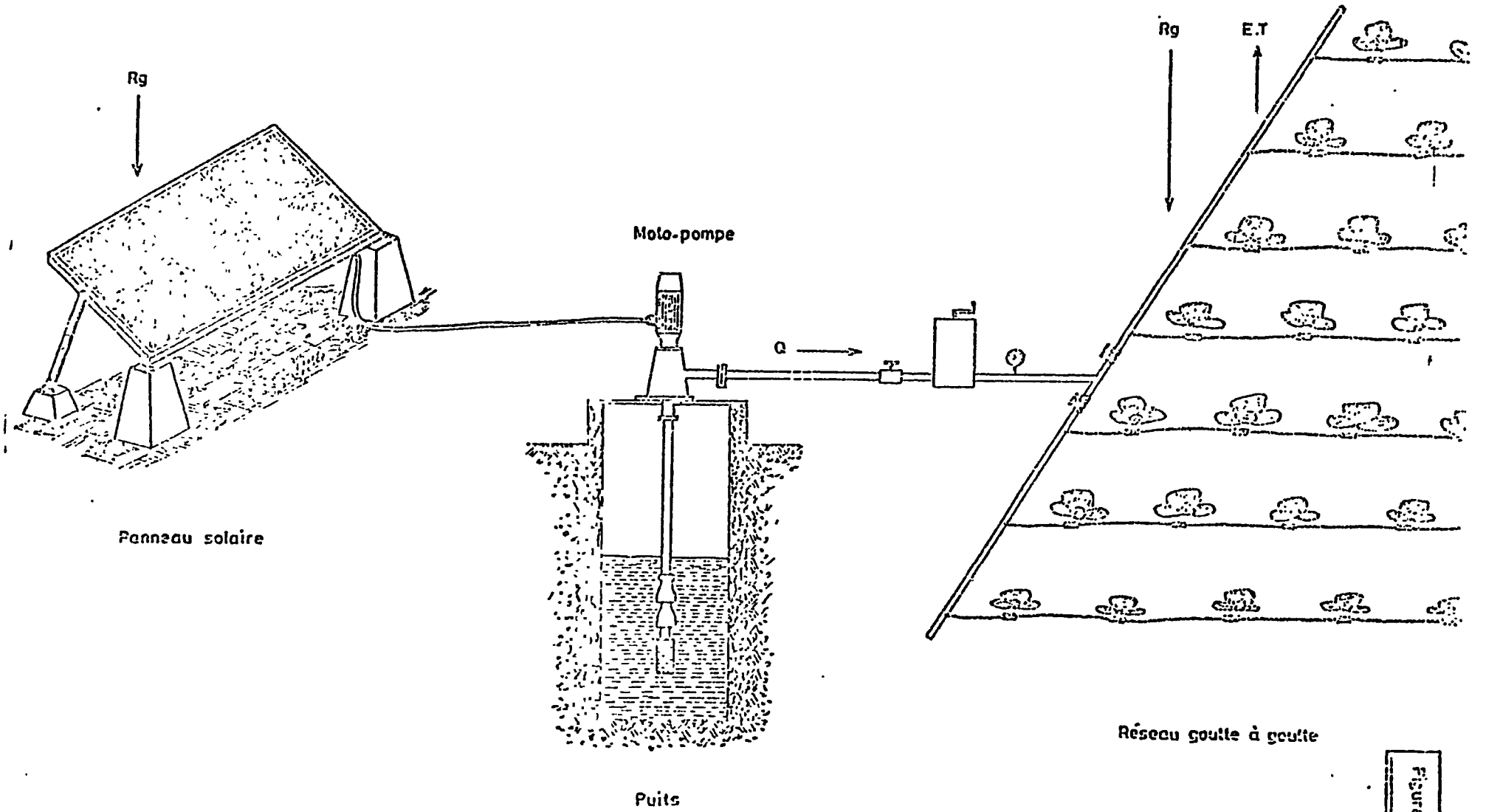

Figure - 1 -

Dessiné par FITOURI C.R.G.R.

Les performances mentionnées par le fabricants sont de 100 m3/jour avec un maximum de 20 m3/h en période de bon ensoleillement. L'ensemble est installé sur un réservoir de 1000 m3 simulant un puits de surface et à proximité d''une station météorologique complète avec un hélïographe type Campbell pour l'enregistrement de la durée d'insolation. Il est prévu l'équipement de goutte à goutte avec une variante culture maraîchère et arboriculture intensive sur trois hectares (voir fig.1).

Le dimensionnement définitif de la parcelle irriguée sera fonction du débit réel de la pompe correlé avec un ratio donné de l'E.T.P.

La méthode à appliquer consistera à enregistrer quotidiennement l'heure du démarrage et d'arrêt du système et la mesure de la quantité global (Q) pompée ..

La durée de fonctionnement de la pompe sera comparée à la durée réelle d'insolation.

La quantité quotidiennement pompée (Q) sera à la fois correlé avec le rayonnement global enregistré (Rg) (station de Kairouan) et avec la durée d'insolation.

Ces mesures de Q = Fc (Rg) seront intégrées aux données acquises sur l'E.T.P. comme fonction simple du rayonnement global(Rg

Ainsi la fraction de l'E.T.P. sera calée avec le débit (Q) pour aboutir en définitive au dimensionnement du périmètre irrigué e à l'automatisation du système pompage solaire-irrigation.

La correspondance de la demande hydrique des plantes et du rayonnement global fut étudiée en Tunisie par le laboratoire de bioclimatologie. Les résultats concernant deux stations encadrant la Tunisie du Centre, l'une au Nord (Tunis) et l'autre au Sud (Gabès), sont exposé dans le paragraphe suivant.

IV.- RESULTATS SUR L'E.T.P. EN FONCTION DE L'ENERGIE SOLAIRE

L'évapotranspiration potentielle définie comme la consommation d'eau d'un couvert végétal continu et bien alimenté en eau, représente l'enveloppe des besoins des cultures.

Elle est mesurée depuis quelques années en Tunisie à traver un réseau d'une dizaine de stations utilisant des lysimètres du type THORNTHWAITE couverts de gazon Kikuyu.

Les données de Rayonnement global enregistrées par la Météorologie nationale à Tunis et à Gabès ont été correlées avec les moyennes mensuelles de l'E.T.P. journalière exprimées en mm par jour. La même unité a été utilisée pour le rayonnement global. (1)

Il existe une bonne correlation (voir fig 2) entre Rg et E.T.P. à Tunis et à Gabès. Les droites de regression ont pour équation.

$$\underset{mm/j}{E.T.P.} = 0,66 \underset{mm/j}{Rg} - 0,95 \quad \text{à Tunis}$$

Coefficient de correlation = 0,96

$$\underset{mm/j}{E.T.P.} = 0,64 \underset{mm/j}{Rg} - 1,01 \quad \text{à Gabès}$$

Coefficient de correlation = 0,98

Ne disposant pas de mesures d'E.T.P. la région de Kairouan se trouve dans une position médiane entre Tunis et Gabès, les coefficents de l'équation de regression peuvent être assimilés aux moyennes arithmétiques de ceux de ces deux stations.

V.- CONCLUSION

La tendance actuelle vers l'extension des puits de surface doit être renforcée et encouragée car elle représente une décentralisation de l'infrastructure hydraulique qui est adaptée à la mobilisation de l'énergie solaire. Cette mobilisation par le pompage à faible débit ne pourra être valorisée que par l'intégration du système goutte à goutte.

L'équipement de dix mille puits en pompage solaire exigera un investissement de cent millions de dollars (20 $/ le watt) et l'installation de 80.000 m2 de capteurs photovoltaïques.

L'utilisation nécessaire du goutte à goutte sur les cent milles hectares demandera le même montant d'investissement.

Ainsi avec deux cent millions de dollars (l'équivalent du coût du barrage Sidi Saad), il sera possible de doubler la superficie irriguée actuelle en créant un noyau de"pointe" économisant et l'énergie et l'eau.

Cet investissement ramené à l'hectare (2000 dollars/ha) est immédiatement concurentiel par rapport à celui mobilisé dans les grandes barrages. Celui de Sidi Saâd coûtera entre 20.000 et 50.000 dollars l'hectare soit dix fois plus chère dans l'hypothèse la plus optimiste.

La statégie hydraulique proposée à savoir la mobilisation de la technologie de pointe pour renforcer les puits de surface aura enfin l'avantage de stimuler les secteurs industriels nationaux très avancés comme la pétrochimie et l'électronique.

---

(1) pour faire évaporer 1 mm d'eau, il faut 59 calories/cm2 environ.

Figure -2-

Relation entre l'E T P mesurée et le rayonnement global mesuré à TUNIS et à GABES

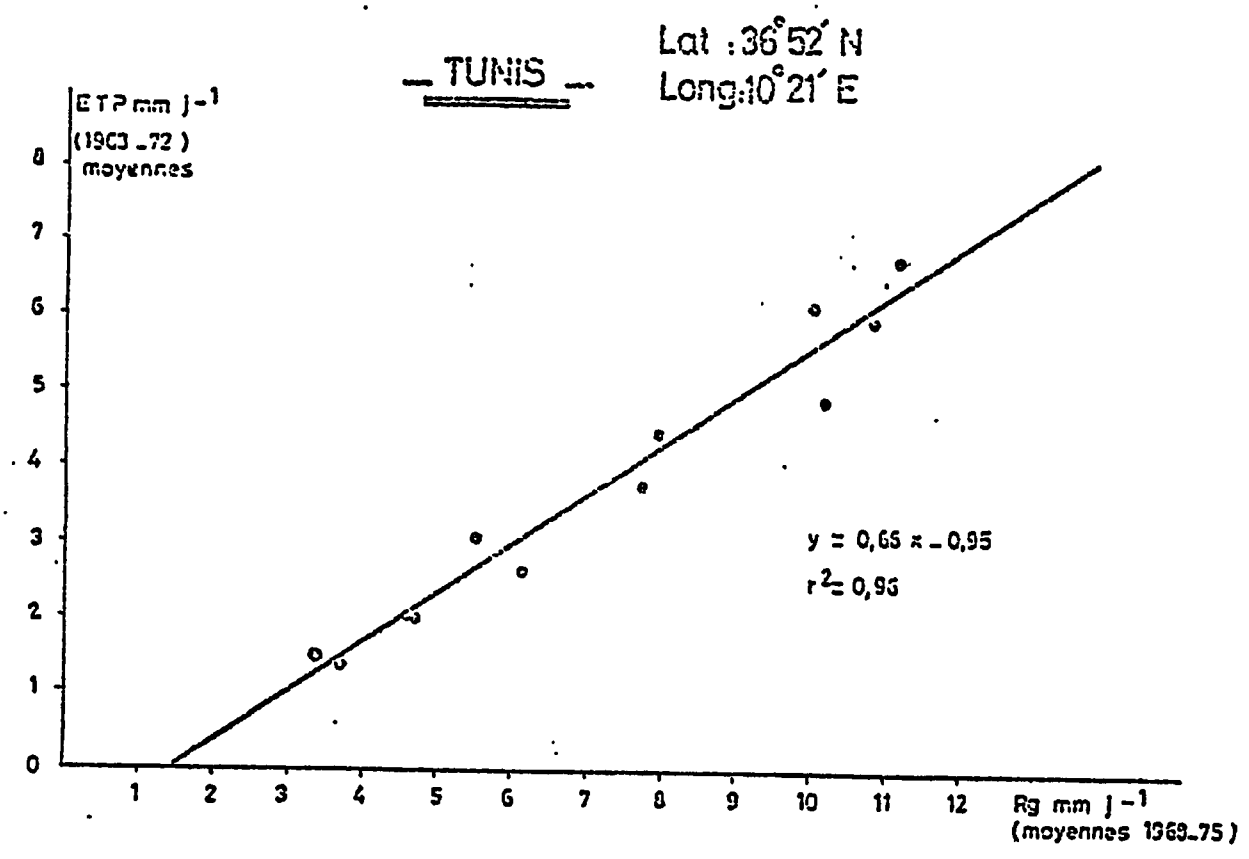

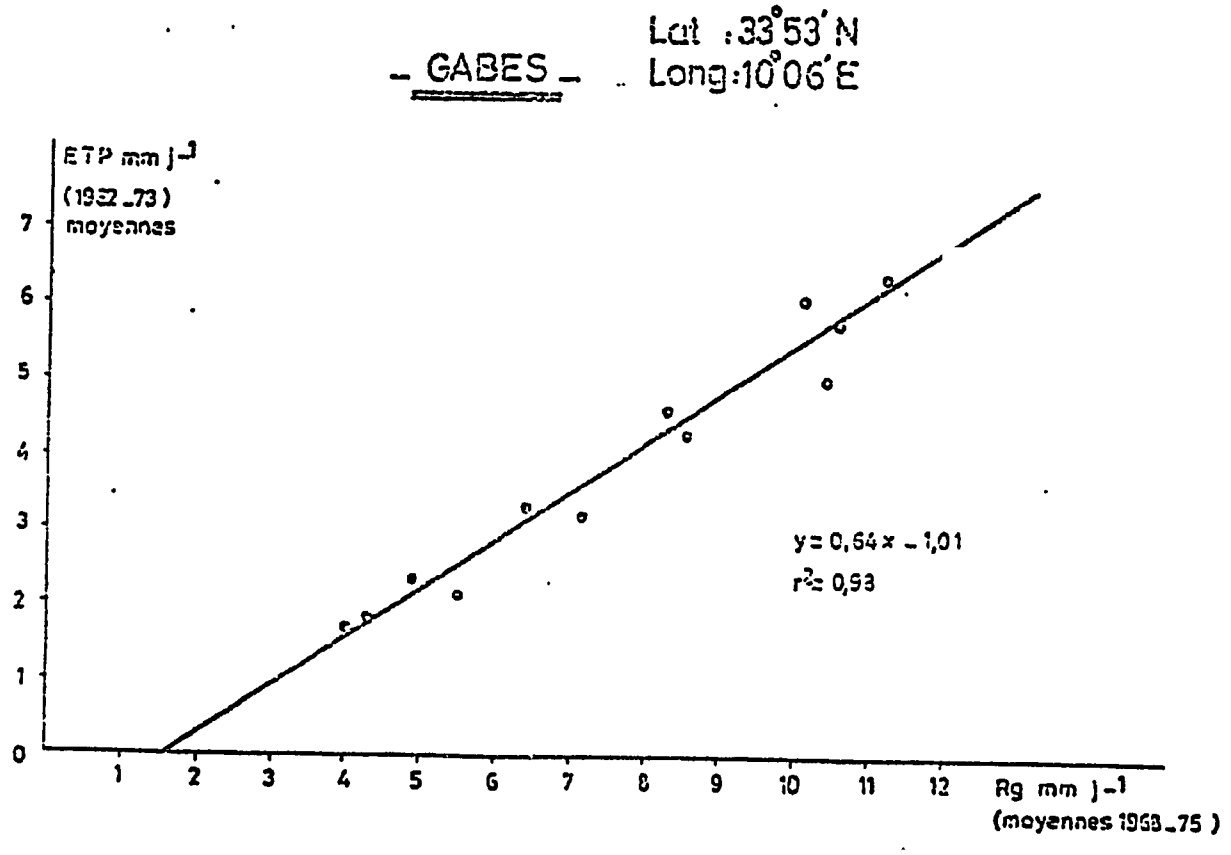

VI.- BIBLIOGRAPHIE

- DAMAGNEZ J., RIOU CH., DEVILLELE et EL AMAMI S. (1964)
  Problèmes d'E.T.P. en Tunisie - INRA FRANCE - "l'eau et la production végétale" p. 371-387

- DEVILLELE O. (1965)
  Premiers résultats des mesures du Rayonnement solaire global effectuée à l'ARIANA (INRAT)
  Document technique n°12 sept. 1965 INRAT.

- EL AMAMI S. (1975)
  L''effet du l'oasis sur le Rayonnement solaire "Conférence COMPES INTERNATIONAL. Nov. 1975 DHAHRAN SAUDI-ARABIA

- RIOU CH. et EL AMAMI S. (1976
  Mesures de l'Evapotranspiration Potentielle en Tunisie
  Colloque Testour Juin 1976.

- EL AMAMI S. et BEN MECHLIA N. (1976)
  L'irrigation goutte à goutte des agrumes en Tunisie
  Premiers résultats d'expérimentation Cahiers du C.R.G.R. Février 1976.

- EL AMAMI S. (1978)
  Les perspectives d''utilisation de l''énergie solaire dans le domaine agricole en Tunisie
  Bulletin d'information de l'INRAT n°9 - Mars 1978

- SOCIETE TUNISIENNE DE L'ELECTRICITE ET DU GAZ (1977)
  Plan du développement Régional de Distribution (1977-78) Mars 1977.

VII.- ANNEXES : TABLEAU I : RAYONNEMENT GLOBAL DE QUELQUES STATIONS EN TUNISIE

EN Calories/cm2/jour (moyennes de 1968-75)

	Janvier	Février	Mars	Avril	Mai	Juin	Juill.	Aout	Sept.	Oct.	Nov.	Décembre
TUNIS	216	267	357	452	590	630	647	584	460	323	271	194
KAIROUAN	251	309	399	476	484	623	613	562	456	352	293	225
GABES	250	319	416	498	609	621	653	599	438	373	289	235

TABLEAU II : EVAPOTRANSPIRATION POTENTIELLE MESUREE EN TUNISIE

en mm/jour

	Janvier	Février	Mars	Avril	Mai	Juin	Juill.	Aout	Sept.	Oct.	Nov.	Décembre
TUNIS (Moyennes 63-72)	1,42	2,00	2,64	3,83	4,93	6,00	6,80	6,20	4,47	3,06	2,03	1,46
GABES (Moyennes 62-73)	1,77	2,18	3,16	4,33	5,00	5,83	6,42	6,10	4,57	3,29	2,40	1,78