A.I.D. PROJECT NO. 698-0407.7

PROJECT GRANT AGREEMENT

BETWEEN

THE REPUBLIC OF LIBERIA

AND THE

UNITED STATES OF AMERICA

FOR

IMPROVED RURAL TECHNOLOGY: MINI HYDRO
ELECTRIC ACTIVITY-LOFA COUNTY

DATE: SEP 1 5 1980

LIMITED SCOPE GRANT PROJECT AGREEMENT

Between the United States of America, acting through the Agency for International Development (AID)

AND

The Republic of Liberia

(Grantee)

1. Project Title	2. AID Project Number
Improved Rural Technology: Mini Hydro Electric Activity -Lofa County	698-0407.7

The above-named parties hereby mutually agree to carry out the Project described in this Agreement in accordance with (1) the terms of this Agreement, including any annexes attached hereto, and (2) any general agreement between the two governments regarding economic or technical cooperation.

3. Amount of AID Grant	4. Grantee Contribution to the Project	5. Project Assistance Completion Date
$ 50,000	$20,000 GOL Contribution $17,035 Local Contribution	September 30, 1982

6. This Agreement consists of this title page and

Annex A (Project Description), Annex B (Estimated Budget), Annex C (Technical Analysis and Annex D (Standard Provisions)

7. For the Grantee	8. For the Agency for International Development
Typed Name: Honorable Oscar Quiah	Typed Name: Remo Ray Garufi
Signature:	Signature:
Title: Minister of Local Government	Title: Mission Director
Date: 9/10/80	Date: 9/15/80

Typed Name: Togba Nah Tipoteh

Signature:

Minister of Planning

Title

12/9/80

Date

PROJECT AGREEMENT

Annex A

PROJECT DESCRIPTION

1. Project Title	2. AID Project Number
Improved Rural Technology: Mini Hydro Electric Activity	698-0407.7

3. This Project consists of:

The installation of a 25-30 kw mini-hydro electric power plant and distribution system for the village of Yandohum in Lofa County. Also funds are provided for evaluating the economic, social and technical aspects of the project. Because of the experimental nature of this activity and the great potential for replication, evaluation and testing are crucial to successful project implementation.

The project will be implemented and managed by Peace Corps/Liberia working in conjunction with the Ministry of Local Government, Rural Development, and Urban Reconstruction.

Annex B contains a life of project estimated budget estimated budget for the above components. Annex C is a technical analysis of the project.

4. Special Provisions

Goods and services, except for ocean shipping financed by AID under the project shall have their source and origin in Liberia or the United States of America except as AID may otherwise agree in writing. Ocean shipping, financed by AID under the project, shall except as AID may otherwise agree in writing be financed only in flaged vessels of the United States of America.

MINI-HYDRO ELECTRIC ACTIVITY

IMPROVED RURAL TECHNOLOGY

ESTIMATED LIFE OF PROJECT BUDGET

A. USAID Project Activity Funding:

	ITEM	ESTIMATED COST
1.	Horizontal shaft 2 jet pelton type turbine, 35 KVA brushless 220V synchronous generator with belt drive	$25,000
2.	PVC penstock, 12' diameter, 620 feet, 160 PSI plus reducers	4,500
3.	Cement 1000 bags	3,500
4.	3 phase, 40 KVA electronic load controller and accompanying power house module, generator overspeed clutch, and 3X20 KW ballast heaters	3,000
5.	Transformers: 7X10 KVA and 1X20 KVA 2200/220 V 3-Phase	9,500
6.	Miscellaneous	1,000
7.	Delivery	3,500
	SUB-TOTAL	50,000

B. Community Contribution:

-- Chain saw	1,000
-- Hand tools	1,000
-- Gas and oil for saw	23
-- Chain saw operator	100
-- Concrete culverts	263
-- Transportation (Materials and labor)	650

ITEM	ESTIMATED COST
Rice mill	3,000
Coffee mill	2,000
Skilled and unskilled labor estimated value	3,999
Local indigenous materials	
--Form wood	3,000
--Sand and rock	2,000
SUB-TOTAL	18,305
C. GOL Contribution:	
1. Technical Assistance (25 PD)	1,000
2. Ministry vehicle and support	4,000
3. Cables 50,000 FT no.14 AWG type VF at .35 cents/ft	15,000
SUB-TOTAL	20,000
GRAND TOTAL	87,035

ENGINEERING PLAN FOR

MICRO-HYDRO ELECTRIC PROJECT IN

YANDOHUN AND DUNGALAHUN, LOFA

COUNTY, REPUBLIC OF LIBERIA

MAY-JUNE 1980

PREFACE

This report completes four weeks of consultancy activities on the development of an engineering plan for the design of a micro-hydroelectric generation and water supply facility for the villages of Yandohun and Dungalahun in Lofa County, Liberia. The details of the engineering plan incorporate the following elements.

1. Review of earlier studies and reports.
2. Design of the plant and uses of electricity.
3. Hydrology of the project site.
4. Dam and water works construction, including penstock layout,
5. Installed capacity and design of generating units.
6. Electrical transmission and distribution network.
7. Water distribution system.
8. Preparation of an implementation plan.
9. Development of a procurement plan and associated costs.
10. Social, economic and managerial concerns.

Review of Reports and Field Investigations

The proposal was well researched and it largely represents the true aspirations of the people of Yandohun and Dungalahun. After a reconnaissance trip to Yandohun, lasting 19 days, partly to testify to earlier reports and to evaluate and establish key figures of the plant requirements on the proposed site, the following comments and recommendations are made.

1. Basic Design Data

Supply areas	Yandohun, Dungalahun
Name of stream	Yando
Gross head	210 ft.
Dam height	5 ft.
Intake channel	1,000 ft.
Reservoir	1.5 acre
Flow at time of visit (May 1980)	130 cfm
Minimum flow	20.8 cfm
Design flow intake	300 cfm
Design flow penstock	150 cfm
Maximum flood	2,000 cfm
Penstock diameter	12"
Number of penstocks	1
Installation	1
Unit rating	35 KVA
Transmission line	4 Km.

These figures were derived on the basis of present and future forecasts of the demand for electricity and the costs of developing the site adequately to meet these demands. It is estimated that should any unforeseen factors cause higher than forecasted demands, only minor additional construction on the dam structure together with the installation of an extra penstock and turbine-generator assembly would be necessary to double the installed capacity. The following pages describe in more detail, the different components and their design.

Dam and Intake

Climatic factors, notably the extreme low flows during certain periods of the dry season necessitates provision of a storage facility and flow regulation. On the other hand, the very high flows in the wet season would require an overflow dam with sufficient spillway to render the headrace intake unaffected during floods. The dam site is located about 1,000 ft. upstream from the proposed power station site and it is founded on a solid bed rock spanning through the entire width of the stream. Given these natural site conditions, a gravity dam constructed from concrete and stone blocks would be most appropriate. With the exception of cement all other materials needed for the dam construction can be obtained on site. It is recommended that the crest value of the dam should be 7 ft. at the spillway and 10 ft. at the headrace intake and the other bank of the stream. The total length of the dam is 120 ft. of

which 60 ft. incorporate the spillway. This would create enough pondage to meet the minimum requirements for restricted uses at the times of low flows. A silt bypass facility is provided for at the basement of the dam structure. This bypass will be kept open during the wet season when the flow and silt content of the water are high; and closed in the dry season.

The intake is part of the dam and consists of a trash rack, slide gate and a stop-log section. Materials for the construction of these items can all be obtained locally or improvised. The trash rack is situated behind the stop-log section and it should be tilted at approximately 10 degrees downstream. The stop-long section is approximately 5' behind. the dam. The slide-gate will consist of a thick slab of properly treated timber which slides vertically in rail tracks embedded on both sides in the concrete walls of the headrace channel and situated behind the trash rack. Two iron rods can be slotted in holes at the sides of the gate slab to form a simple mechanism for control of the water flow in the channel. The trash rack will be constructed from standard wire meshes readily available in Liberia. It will be necessary to replace these periodically after a few years of service.

Headrace Channel

The headrace channel is 800 ft. long. The channel runs along the hillside and through a cut into the hill at an average slope of 3:1000. It is founded on an open cut in the hillside and the structure will be lined with 3" concrete. The cross section is rectangular, width 2ft. and depth 2.5 ft. For an intake flow of 300 cfm, the depth of water in the channel will be 6" at average velocity 2.5 fps. A retaining wall formed by stones will be built 50 ft. from the intake. A spillway is provided along the length of the channel for extra protection against floods. A 20 ft. long settling basin having twice the width of the channel is incorporated in the channel. Together with the silt bypass at the dam, these two would render sufficiently clean water at the penstock intake.

Penstock Intake

The penstock intake is equipped with a trash rack, an inlet gate, one stop load section and a spill way. It measures 4 ft. by 10 ft. The trash rack measures 4 ft by 2 ft. and can be fabricated locally to satisfactory free opening.

The sluice gate which is hand operated is 3 ft. by 2 ft. The gate consisting of a thick timber slab is downstream from the trash rack and slotted in rail tracks which are embedded in the concrete structure at the penstock intake. This provides a

means of controlling or shutting off water flow in the penstock in addition to stop gates at the turbine end and it can be fabricated locally.

On the right hand side of the intake, an overflow section is provided to spill all surplus water. The length of the weir is 3 ft. and below this, a silt bypass tube is formed which will be used to empty the penstock intake or to bypass water flow in the penstock. The stop log section will be situated in the intake channel, 2 ft. from the penstock intake.

Penstock

The design penstock intake and the installed capacity of the plant requires that a 12 inch internal diameter pvc pipe of average desgn load 160 lb./sq. inch be used. PVC is chosen primarily because of its costs and its suitability to site conditions, i.e., it is very easy to lay, does not corrode, it is light, offers very little friction to water flow, and it has a long lifespan. The total length of the penstock is 600.ft. For this size of penstock, the water velocity in the pipe will be 3.5 fps and the head loss due to the friction will be 1.8 ft. the penstock will be provided with one gate valve at the turbine end and the joints founded and held tight in concrete.

Power House

The powerhouse will measure 10'X14'X10'. It will be founded on

a solid concrete foundation with provision for water discharge from turbine housing. In addition to the turbine-generator set, it will house the distribution board and switchgear which will be mounted on one side of the walls. The wall on which the switchgear and distribution board are erected must be built from brick but the others will be built from stones and concrete. Provision is made for discharge of water from the turbine housing through the power house foundation into the tailrace.

The front door extends through the whole width of the wall facing the access road and will consist of two wide timber slabs. The access road is extended as far as the power house and it will be level with the house floor. The turbine and generator will be mounted on rail tracks solidly secured in the foundation. Two other rail tacks mounted across the length of the roof provide a hauling facility for turbine and generator components during routine maintenance.

Tailrace Channel and Ballast Circuit

The water is discharged at atmospheric pressure from the turbine casing into a passage in the power house foundation leading to the tailrace channel. There is no need for an elaborate tailrace structure except that the channel must lead to the mainstream where resistive heating forms an important part of the ballast circuit.

The ballast circuit consists of resistive heaters submerged in a pool of stream water through which surplus power from the generator output is discharged for the purpose of keeping the operating frequency constant. The input to the ballast circuit is fed through the electronic governing system.

Hydraulic and Electrical Equipment

a. Turbine and Governor

On the bases of site data for the net head and the design flow, a two jet pelton type turbine is proposed as appropriate for this installation. One advantage with this turbine is its high conversion efficiency even on half its optimum rated capacity. The load factor and utilization factor for the proposed installation are expected to be very low, with maximum demands highly seasonal, e.g. the coffee and rice mills which are major consumers will be only used in the dry season. Thus there is the necessity for more than one way of manually or otherwise controlling turbine input with the provision of two fixed nozzles to minimize KW flow problems and also to lighten the governing duty. The alternative of operating two generation units would be more expensive and the advantage of having a possible standby facility is not particularly important for this project. A turgo impulse turbine would also be suitable but this would be more expensive. Coarse control due to seasonal or long-term changes in demand can be taken care of by opening or closing one or the other of the

brake valves. Fine and instantanous control in matching generator output to the power demand will be taken care of by an electronic governor which is connected between the generator and the main transformer.

An electronic governor is preferred primarily because of its low cost and for the fact that it is almost free of maintenance. Although newer than hydraulic governors for turbine speed control the electronic load control governor has proved adequately reliable in some countries with similar climatic conditions to Liberia. Use of the electronic governor implies the inclusion of a ballast circuit to absorb surplus power when the consumer demand is lower than the generator output and an electromagentic clutch system to disengage the turbine should any cause arise which might overspeed the generator.

b. Generator and Gearing

The nearest generating facility to Yandohun is 20 Km away at Kolahun. Also, there is no forseeable plan to extend any such existing grid to this area. The installation will be operating in isolation and it will be a vital energy supplier for the Yandohun area, although the demand for electricity will be small. A 35 KVA, 220V, three phase synchronous type brushless generator is recommended to meet these demands. The brushless type generator is easier to maintain and a single unit will not only

be cheaper but it will avoid parallel ng and switching problems as for multi-unit systems. Flow and enerator output problems will be adequately overcome by contro of gate openings of the two fixed nozzles together with the e ectronic governor. The forecasted average and maximum demand for the first five years of operation are not likely to exceed 20 KW and 30 KW respectively. Based on the power market survey and forecasts performed during the reconnaissance trip to Yan ohun, an installed generating capacity of 35 KVA is reco mended to satisfy these demands. It is useful therefore to c nsider what amenities might be provided by a firm source of 30 KW.

Houses (Lighting only) Each house: 4 x 40W 60 houses: 55 x 4 x 40 W	8.8 KW
Houses (other uses 55 houses: 55 x 50W Refrigeration (8 houses): 8 x 250W	4.75 KW
School Lights: 6 x 40W Power (Projectors, etc.): 400 W	0.64 KW
Health Center Lights: 4 x 40W Refrigeration: 1 x 250W Heating: 1 x 1,000W	1.41 KW
Workshop: Lights: 4 x 40W Small hand tools: 500W Woodsaw and other 2.0 KW	2.66 KW
Street lighting: 20 x 100W	2.0 KW

Water pump: 2 x 3.5 KW		7.0 KW
Coffee Huller Rice Huller 1 x 3.5 KW	Motor Requirements	3.5 KW
Total KW.		30.76 KW

It is anticipated that the workshop, rice huller, coffee huller and water pumps would operate normally only during daylight hours and consequently, not all the above loads would operate at any one time. A three phase machine is preferred because this provides for cheaper and more easily accessible motors for running the water pumps, coffee and rice hullers, etc., which are vital end-applications for this project.

It is unlikely that the optimum operating speed of the turbine will be the same as the operating speed of the generator. An appropriate belt and pulley system of speed increasing is suggested to couple the generator and turbine shafts. The main reason behind the choice of a belt drive system is its low cost and simplicity of operation given the unavailability of adequately skilled operators for proper maintenance of the better but more complicated and expensive gear box system. Either flat belts or poly-vee belts would serve well. In view of the interrelationship between the turbine, gearing system and the generator, it is recommended that the turbine manufacturer recommend the generator and the type of belt including the gear ratio. The turbine-generator assembly will be mounted horizontally.

The scheme envisages one main outdoor 45-60 KVA three phase transformer to step the generator voltage to 2.2 KV. Alternatively, three 20-30 KVA single-phase transformers can be used. The generator is connected to the transformer through a circuit breaker or an HRC fuse assembly, and the electronic load controller. The main data are:

Generator:

Output voltage:	- 220-240 V.
Phase:	- 3
Frequency:	- 60 HZ
Rating:	- 35 KVA

Transformer:

Rating:	- 45-60 KVA three phase or 3 x 30 KVA single phase
Type:	- Outdoor
Voltage ratio:	- 220V/2200V

It is assumed that all pertinent protection equipment for the generator will be included in its package.

Electrical Transmission System

The transmission voltage is 2.2 KV. Two main transmission systems are foreseen:

1. 7,000 ft. from power station to Yandohun.
2. 3,500 ft. from power station to Dungalahun.

Given the vulnerability of the system to faults, and the technical inability of the community to handle any major faults on the system, an underground transmission system is proposed. In particular, the topography and natural vegetation would not favor the use of overhead lines. It was also alleged that the

frequency of lightning strikes in the area is high and hence the possibility of faults due to direct or indirect strikes with severe consequences. Allowing for future expansion in power generation to say 60 KVA; at 2.2 KV and a maximum transmission distance of 7,000 ft., a No. 14 UF type cable would serve adequately for the Yandohun circuit. For the Dungalahun line, the same type cable will serve well. The initial total cost of the underground cable will be more than the overhead option but it will be virtually trouble free for a long time. The cost of maintaining an equivalent overhead system will be excessive and it will demand a technical back-up which is not readily available in the area. It might however, be worthwhile to adopt the overhead option if LEC is willing to provide not only the line conductors, transformers and skilled labor for line installation; but also a near full proof protection system to render the system less vulnerable to outage due to lightning strikes. Such a system can be installed using properly treated wood poles and cross-arms that can be obtained locally and 4 x 4 km. of A.W.G. No. 4 ACSR conductors including line accessories. At 2.2 KV transmission voltage, this system can be adequately handle up to twice the installed capacity of the system.

Electrical Distribution System

Yandohun

It is proposed that the distribution system ~~to~~ too be underground. As for the transmission system, this avoids any need for

protection against lightning and the danger of exposure of lines. The transmission cable will run through the town at 2.2 KV and terminates at the coffee and rice mills and the workshop which are on the same side of town. A 20 KVA 2200/220V three phase transformer connects these three to the main cable. Supplies to the water pump, school, clinic, streets and houses are tapped from the main cable through 5 x 10 KVA 2200/220V three phase transformer along the line length. Each phase of the distribution transformers will form a supply system for a few houses. The demand for each circuit would be low enough not to cause intolerable unbalanced loading of the entire system on the generator. The single line diagram of the distribution system is shown in Appendix 4. The total length of cable required is 8,000 ft.

Dungalahun

The maximum power requirement for Dungalahun is not likely to exceed 10 KW in the forceable future. The same type cable as for the Yandohun circuit will serve well for connection to the generator. The transmission cable will pass by the edge of the town and terminate at a single 10 KVA 2200/220V three phase transformer at the water pumping station. The water pump will receive about 5 KW at 220V three-phase from this transformer. The supply to the rest of the village is tapped along the length of the main cable through a 10 KVA

2200/220V three phase transformer. Three circuits at 120V single phase from the transformer secondary will provide this supply. The total length of cable required is 3,000 ft.

Uses of Electricity

A meeting was convened at Yandohun on Wednesday, May 25, 1980 for the purpose of identifying potential uses of electricity and the priorities attached to these uses. Earlier, a survey was carried out partly for this reason and the meeting served to cross-check earlier findings and to provide an avenue whereby all the potential beneficiaries would present their arguments. This was also necessary for assessing the initial demand and for forecasting future developments, since these are vital considerations in the specification of equipment. In order of priorities, the following end-uses were identified

Agricultural Processing

Coffee, cocoa and rice farming are major agricultural activities in that area. I was told that almost every mature man resident

in Yandohun had his own plantations and that there is a lot of scope for expansion of existing plantations. It was therefore not surprising that the people singled out a coffee and rice milling industry as of the highest priority. For the major part of the year, i.e., during off-season periods, coffee and rice hulling machines will be idle for most hours or they will be highly underused. It is therefore not necessary to have very powerful machines since the work-load on a smaller machine can be spread out evenly. Also, it would not be necessary to install two separate electric motors for each of the milling machines. A single motor of slightly higher capacity than the larger of the two mills can be coupled on both sides of the motor shaft and the mills operated one at a time as the necessity arises.

2. Water pumping

Both Yandohun and Dungalahun are situated on high grounds and water collection is a very difficult task. Both communities rated a water supply system as an important end-application of electricity to their villages. For Dungalahun in particular, this will be the largest energy consumer and extension of services to this village can hardly be justifiable if this element is not included in the electricity distribution network. The sources of the water supply for the two villages are both springs that are and have been in use for a long time. They are both very close to the villages and their minimum charges are satisfactory but pumps would be absolutely necessary for

the system. No tests were performed o the water quality and no treatment plants are included in the d sign of the water distribution systems.

There will definitely be an improvemen in the hygiene condition of the villages with the introduction of water seal latrines. The majority of the population are mus ims and use of water in latrines is not completely new to them and is not likely to create any adverse effect on traditio al practice. There was evidence that on-going efforts to intr duce water-seal latrines has been received enthusiasti ally and that the people will adjust to this change favorably.

Lighting and Other Domestic Uses

This will undoubtedly be the most comm n end-use and its demand is expected to rise much faster than other uses. Besides, house and street lighting, other domes ic applications mentioned include refrigeration, luxury items li e radios, fans, cookers and electric iron.

If such expectations in living standar s are to be met in practice, it would first be necessary o improve on present housing conditions. Electricity suppl to illuminate the existing school and for other applications in t e proposed clinic was also mentioned. Such applications in the c inic would include refrigeration of drugs and heating for steril zation, etc. There was

however, no written confirmation to show Government's commitment to provide drugs and personnel necessary for running the clinic. It can, however, be assumed that such decision can be favorably influenced by the presence of a reliable electricity supply in Yandohun.

Small Scale Industries.

Carpentry, blacksmithing and tailoring are practiced in Yandohun but on very small scale basis. If these processes are to be electrified costs of necessary electrical equipment are to be borne by individuals. There is reason to believe that with time at least one carpenter and one tailor can afford to do this. I was also assured that this will greatly influence both the quality and quantity of production. It was not clear how blacksmithing would benefit from an electricity supply system and there was no confirmation that anybody intends to introduce any end applications in this field. Judging from the present scales of production and available skills, employment opportunities as a result of modernization through electrification of these industries is not likely to change very much.

In future, it is anticipated that other uses which usually follow the establishment of an electricity supply facility will be introduced. The system is designed with this in mind and it is assumed that the installed capacity of the proposed plan is adequate for any such developments in the foreseeable future.

If reinforcement becomes unavoidable, only minor constructional work on the dam and the installation of an additional penstock and turbine-generator set will be necessary. At this time in the future, it is assumed that the community would be in position to do this with little or no external financial assistance.

Hydrology of Project Site

No rainfall records or detailed contour maps were available for this study. It was therefore impossible to estimate the catchment rainfall. It was however, confirmed by the resident PCV and the villagers that the Yando stream has never been known to dry out completely. Stream observation and gauging by the resident PCV started in 1977 and during the intervening years, the following records were obtained:

Maximum flow	:	2,000 cfm
Minimum flow	:	20.8 cfm
Flow at time of visit (May 1980)	:	130 cfm

Some effects of soil erosion at the dam-site were apparent during the visit. The stream water was clear but the villagers said that the water does get muddy particularly in the wet season. It is therefore, proposed to incorporate a silt bypass at the basement of the dam. The siltway can be opened in the wet season to allow passage of silt which settles at the buttom of the stream. In addition, it will be necessary once every dry season to clean the reservoir, headrace channel and the penstock intake for any silt that might accumulate during the preceding wet season.

Detailed geological studies were not made but on the surface, the dam site exhibits ideal features for constructing a gravity dam. The soil in the headrace channel path has a low clay content and concrete alignment will be necessary.

Water Distribution System

Yandohun

After a visit to the originally proposed source of drinking water, it was decided that this site would not be suitable because:

a. Most villagers assured me that it was not reliable and can dry out completely in extreme dry seasons.

b. The site was very far from town and could not have afforded the cheapest means of providing the source of water supply even if the system was fed by gravity flow.

Two other sites were visited and after performing necessary flow measurements and cost comparisons for development, the present source of drinking water, the Samuka spring was recommended. The resident PCV and the villagers testified that the spring has never been known to go dry, and the lowest flow, estimated at 4 gals/min. is considered adequate to meet present and the foreseeable future demands. This was particularly a very suitable site because of its close proximity to town. For this reason, it was impressed on the people that since this spring was to be developed as the source of drinking water, the catchment area which extends into town must not be used up for

future expansion of the town. In particular, toilets were to be kept away from this area and newly dug pits were to be closed up.

An encatchment pond is to be constructed at the base of the spring for impounding most of the flow from the spring. The pumping station would be located at a short distance from the pond and it will pump the water through a 2-inch pipe to the reservoir which is located 800 feet away at a vertical height of 100 feet above spring level which is considered the highest point in town. From here, water is fed to six public taps, the school and the proposed clinic. Details of the design and the water distribution system and presented in Appendix 5.

Dungalahun

At Dungalahun too, inhabitants expressed the common concern for provision of tap water as of the highest priority in the uses of electricity. The source of drinking water is 200 feet at the buttom of the hill on top of which the town is situated. Because the village is so small, only one public tap is provided for in the design. The public tap will be at the base of the reservoir and no extra pipes will be required for water delivery. The pump installation is also included in the main electrical circuit for supply to the village.

Implementation Plan

The implementation of the project will be governed mainly by the delivery time of components. It is proposed that all necessary site work requiring local labor should be completed before the expected time of delivery of external items. Also, the rainy season precludes certain functions to be undertaken at desirable times. Given these conditions, the following duties are proposed to enable completion of the project by May 1981.

1. June/July/August 1980 (12 weeks)

Preliminary works

a. Site and pond clearing

b. Extending and improving access road

c. Warehouse building construction

d. Gathering construction materials, i.e. sand, stones, timber and transfer to site.

A power-saw has been bought for this project and site clearing would require only finishing touches. It is also possible for this time of the year to clear the pond of stones and sand that will in turn be required for dam construction. Culverts have already been built for constructing and extending the new access road as far as the power station site and only zinc and a little cement needs to be bought for the warehouse construction. Some construction materials have already been gathered

but transfer to site can be delayed a little to allow for more gathering of materials.

September 1980 (4 weeks)

Headrace construction

a. Channel excavation

b. Penstock intake construction

c. Retaining wall construction

This is the peak of the wet season. Channel linning and other concrete works must be delayed until November or December.

October 1980 (4 weeks)

~~a. Water pumping station construction~~

b. Coffee and rice huller building construction

These will require minimal concrete works, only for the foundation.

November 1980 (4 weeks)

a. Trenching for cable and water pipe laying

b. Power station foundation laying

c. Headrace channel lining

~~d. Timber treatment for use as poles and cross arms in distribution network~~.

December 1980 (4 weeks)

a. Power house building construction

b. Encatchment pond construction

c. Water pump installation

January 1981 (4 weeks)

a. Dam and headworks construction

b. Coffee and rice huller erection

It is expected that at this time, villagers would have harvestec coffee and cocoa crops and they would be in position to buy rice and coffee hullers for erection

February-March 1981 (6 weeks)

Machinery delivery and erection including penstock and water pipes.

March-April 1981 (8 weeks)

Cable laying and distribution network erection and accessories. It is assumed that house-owners are responsible for their own domestic house wiring and hooking to the distribution network. It is also expected that by this time, they would have made arrangements to ensure that their houses have been wired for connection to the distribution network.

May 1981 (2 weeks)

Testing and Training.

During this period, proposed operators will receive some basic training. An operating manual will be prepared for this. Consumers will also be taught some basic safety procedures in the house.

May 1981

Commissioning.

Social, Economic, Evaluative and Managerial Concerns

There is no doubt that the project will achieve its main aim, i.e., to improve the standard of living of the majority of the population and to induce other rural communities to learn how this new amenity can improve their lot. It is expected that the amenity will enhance a more tolerable environment where a lighter work load in certain areas creates a better potential for improved income from self employment, primarily through higher incomes from agricultural activities, etc. This way, future replication of micro-hydroelectric projects could become self-supporting. It is also expected that after this pilot project, rural inhabitants would find the introduction of electrical supplies in their homes, less radical a change to get accustomed to. When a high demand for project replication exists, it would be worthwhile to consider home manufacture of some components, e.g., turbines; to reduce overall costs and hence, encourage more demand for replication.

The community represents a favorable social set-up capable of running a communally-owned electrical system of this size. Already two youngsters had been selected to follow closely all aspects of the project development. I suggested that this should be increased to four so as to provide for a lighter work

schedule while they go abo t their farming activities. These will form the core of the operating staff when the plant is completed; and their dutie will include not only operating the electrical plant but a so the water pump, rice and coffee hullers. In addition to s me basic training in plant operation, an operating manual will b: prepared outlining not only the operating procedures of th: plan, but also the limitations of the plant to provide for o ly modest and basic needs. It was pointed out that the commu ity either decide at this stage to adhere to these regulation strictly, or not to proceed any further at all. In partic lar, there must be a limitation to what type of appliances or the number and capacity of light bulbs each household would be entitled to install without overloading the machine. . council of administrators will be appointed to administer al decisions regarding the management of the system including it financial proceedings. During the period of training, operat rs will be thought all the intricacies of the system operation; w at they would be capable of doing and what they cannot but r fer to outside help. In this regard, it is important at this ea ly stage to solicit the confirmation of support from LEC staff n particular those at Kolahun to provide assistance when s ch problems arise. One way of doing this would be to app int a consultant from within LEC staff in the area, who wou d be available as the necessity arises while the team of c erators familiarize themselves with the system operation nd maintenance.

I learned during my assignment that the Peace Corps are planning to establish an appropriate technology workshop in the area. If and when this happens, it is expected that volunteers will always be available at least while the workshop exists, to help in monitoring certain critical components in the system including independent maintenance and repair work; or future socio-economic evaluation of the project. This is particularly important for the first few years of operation when problems are most likely.

Conclusion

To sum up, it is perhaps obvious from what has been said already that the people of Yandohun by their own efforts have established the necessary background which can be relied upon for supporting a pilot project of this nature. It is an understatement to say that the confidence bestowed on the resident PCV Mr. Gary Duncan, through his selfless dedication to understand the needs and work with the people to achieve these needs at grass-roots level is largely responsible for this. Given Mr. Duncan's integrity, the people would be prepared to do it all alone, if they could, and they have developed enough confidence to continue the good works even in Mr. Duncan's absence. Such a combination of dedication on the one hand, and cooperation on the other, are vital factors for undertaking a pilot project of this nature.

This system has been planned with a view to keeping costs low but without compromising unduely, the minimum requirements of the system and the safety of operation. Many modifications or innovations are possible to make the system less expensive. Perhaps this pilot project will help in identifying some of these areas for future applications. Standby units are not provided for due to financial limitations and besides, they are not considered important. Interrupted services therefore, should be expected until standby units for such components, as for example the electronic load governor are acquired.

There is considerable potential for replication of such projects elsewhere in this region. Many potential sites were visited during the visit. In anticipation of such developments, a few villages had already acquired their own turbine-generator sets eventhough these were later found to be unsuitable. It is hoped that this pilot project will provide a test case which would identify what other considerations are necessary to determine the suitability of project replication elsewhere. It is also expected that with available supply of cheap electricity at Yandohun, many end-use applications will be developed to create more productive uses for electricity at this level and hence a stronger appeal for village electrification.

Appendix 1

Cost Estimates

These figures have been derived to the best of my knowledge of current estimates. Fluctuations must therefore be expected since prices are not constant.

ITEM	COST
1. Horizontal shaft, 2 jet pelton type turbine; 35 KVA brushless 220V synchronous generator with belt drive.	$25,000
2. P.V.C. penstock, 12" diameter, 620 feet, 160 psi plus reducers	4,500
3. Cement 1000 Bags @ $3.50/bag	3,500
4. 3 phase, 40KVA electronic load controller and accompanying power house module, generator overspeed clutch, and 3x20KW ballast heaters.	3,000
5. Cables: 50,000 ft. No. 14 AWG type UF @ $0.35/ft.	17,500
6. Transformers: 7x10KVA and 1x20KVA 2200/220 V 3-phase	7,000
7. Consultancy	4,000
8. Hand tools	1,000
9. Miscellaneous	1,000
10. Delivery	3,500
TOTAL	$70,000

N/B. It is assumed that suitable water pumps, coffee and rice hullers can be bought from this end by the people themselves. This was suggested and accepted during my visit.

Appendix 2

Procurement Plan

I have here recommended manufacturers whose products I am familiar with. However, there are many other manufacturers who can be contracted directly in the U.S., and I suggest that this be done for cost comparison and easier accessibility. It is proposed that the following items be procurred through USAID:

ITEM	MANUFACTURER
1. 35 KVA, 3 phase brushless generator together with matching 2 jet horizontal shaft pelton turbine (operating head 200 ft and flow 150 cfm) and belt drive.	Evan's Engineering Services, 31 St. Thomas Road Launceston. Cornwall, England Tel. Launceston 3982
2. 3 phase, 40 KVA Electronic load controller, accompanying power house module, generator overspeed tripping device (clutch) and matching ballast heaters	Evans Enigineering as above
3. Cables: number 14 AWG type UF	From the U.S.
4. 12" diameter 160 p.si PVC penstock plus reducers	From the U.S.
5. Plastic Pipes	Same as for Penstock
6. Cement	CEMENCO, Monrovia Liberia

7.
Transforers — From the U.S.
10 and 20 KVA 2200/220V three-phase

Items obtainable from LEC

1) Transformers — a) 60 KVA. 220/2200V Star-Delta oil cooled

2) Switchboard and accessories — Voltmeters, Ammeters, Frequency meters, wattmeters, control switches fuses, overcurrent relays, over-voltage trip, etc.

3) High repturing capacity fuses and/or group operated circuit breakers

Items obtainable from mining companies or that can be fabricated locally

1. Trashracks

2. Stop logs

3. Sluice gates

Appendix 3

Water supply data and distribution system

Yandohun

Present population	300
Design population	400

Water Demand

Demand per head	10 gals/day
Total demand	4000 gals/day

Source

Min yield rate	4 gals/min
Estimated safe yield rate	2.8 glas/min
Safe yield	4000 gal/day

Intake Pond

Construction material	Ferrocement
Cross-section	Circular
Dimensions	Diameter = 13 ft Height = 8 ft
Capacity	8000 gals.

Reservoir Tank

Construction material	Concrete
Cross-section	Rectangular

Construction details to be obtained from ministry of local government and elsewhere.

Water Pump

Type	Self priming
Supply	220 Volts, 3 phase
Capacity	130 gpm at 100 ft head
Motor capacity	5.0 AP
Pipe size	2"

Dungalahun

The water distribution system for Dungalahun will consist of a single public tap at the resevoir. This is considered quite adequate in view of the very small size of the village both in terms of area and population.

Appendix 4

Single line diagram for the Yandohun Electrical distribution System.

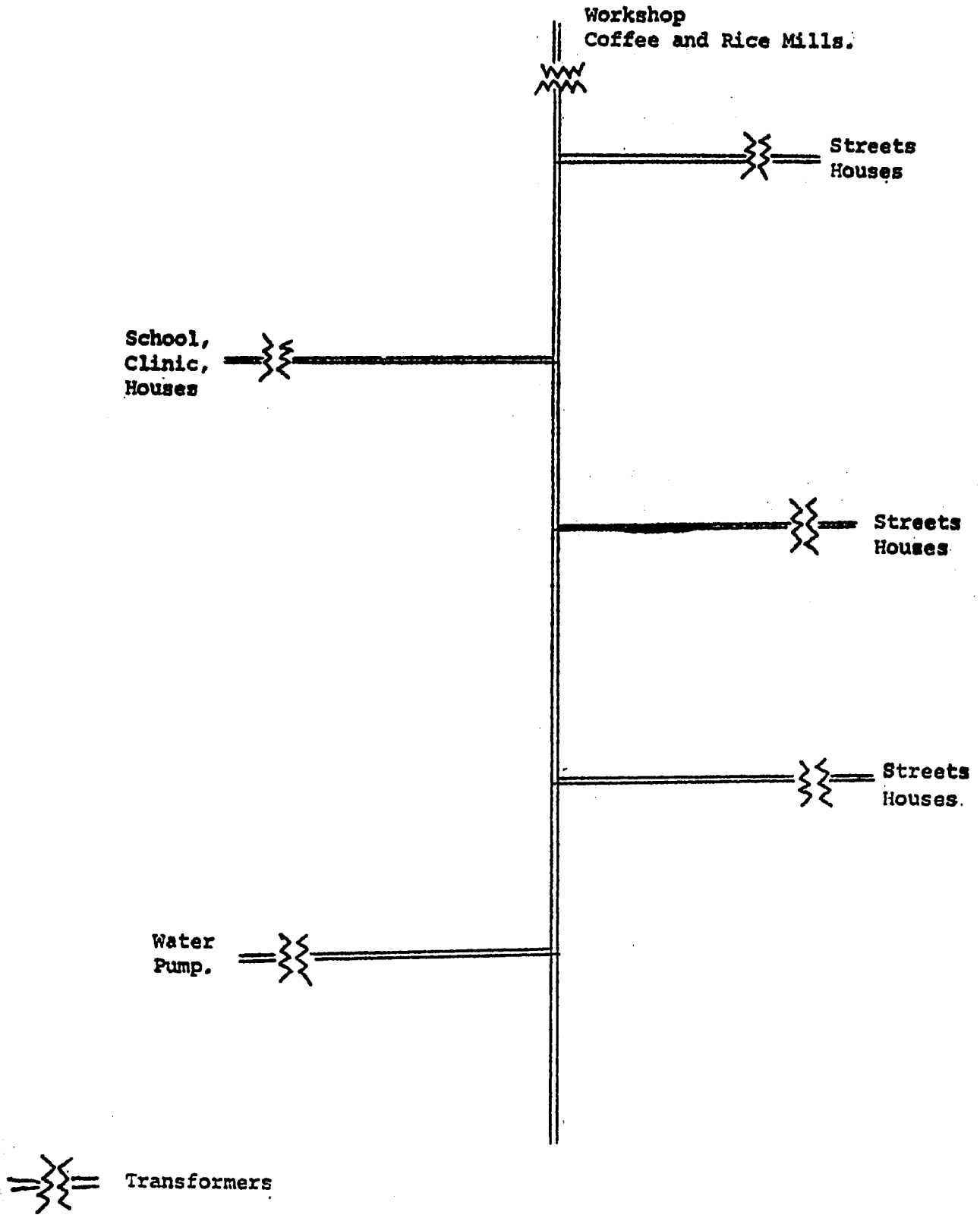

WATER DISTRIBUTION SYSTEM: YANDOHUN

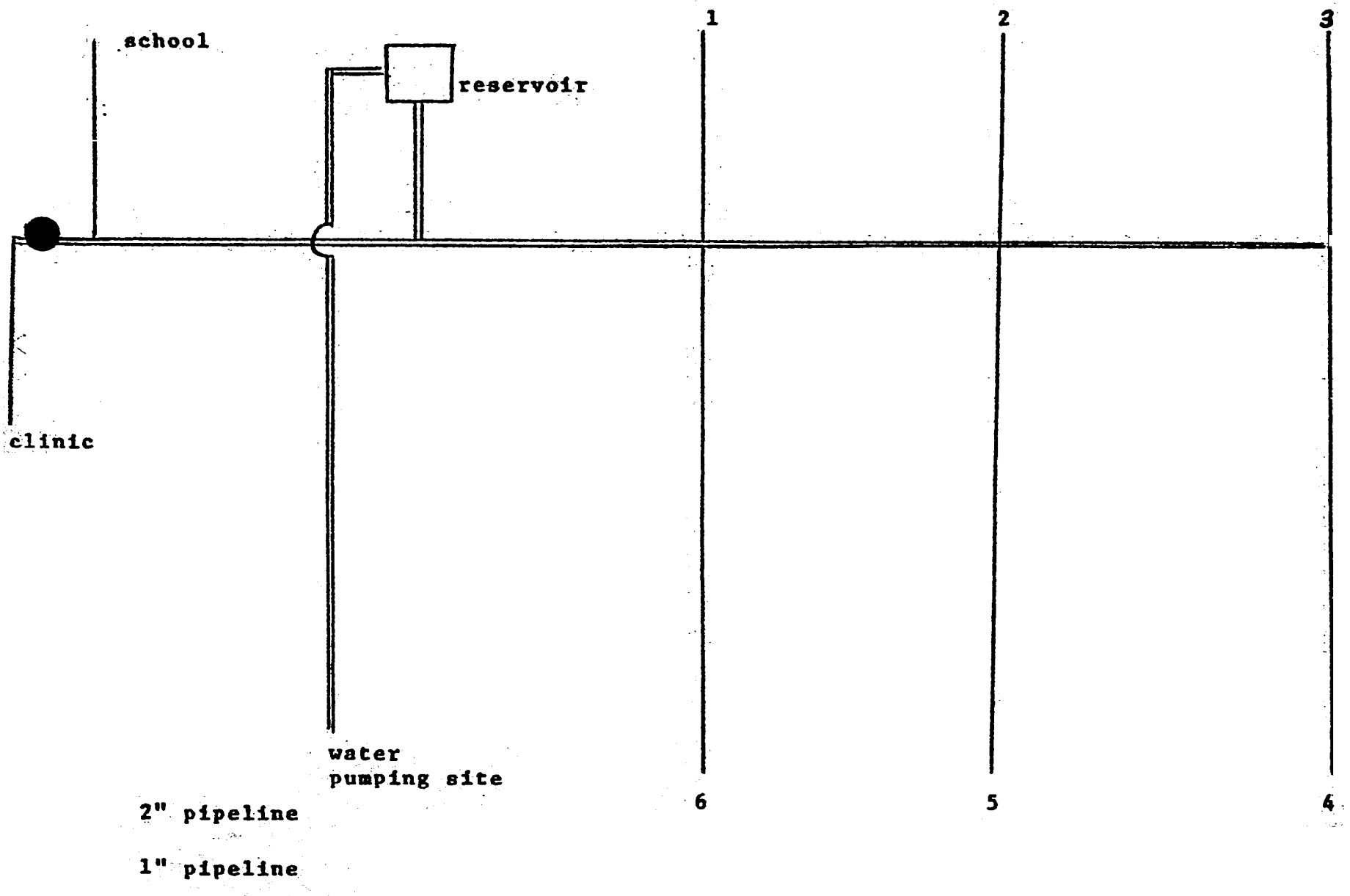

PROJECT AGREEMENT

PROAG STANDARD PROVISIONS ANNEX

A. Reference to 'this Agreement' means the original Project Agreement as modified by any revisions which have entered into effect. Reference to 'cooperating country' means the country or territory of the Grantee.

B. (1) AID will make available the amount specified in Block 3 of this Agreement, as necessary for the Project, as may be further described in Annex A.

(2) The Grantee will make available the amount specified in Block 4 of this Agreement, as necessary for the Project, as may further be described in Annex A. The Grantee will also make, or arrange to have made, additional contributions of property, services, facilities and funds required for carrying out the Project as specified in Annex A.

C. AID and the Grantee may obtain the assistance of other public and private agencies in carrying out their respective obligations under this Agreement. The two parties may agree to accept contributions of property, services, facilities and funds for purposes of this Agreement from other public and private agencies, and may agree upon the participation of any such third party in carrying out activities under this Agreement.

D. Except as otherwise specified herein or subsequently agreed by the parties, all contributions of the parties pursuant to this Agreement shall be made on or before the Project Assistance Completion Date, or amended date. A contribution of goods or services shall be considered to have been made when the services have been performed and the goods furnished as contemplated in this Agreement. Disbursement of funds may take place after final contributions have been made, but AID shall not be required to disburse funds hereunder after the expiration of nine months following the estimated Project Assistance Completion Date (Block 5 of this Agreement) or any amended Project Assistance Completion Date specified.

E. The procurement of commodities and services to be financed in whole or in part by AID may (where so required by AID procedures) be undertaken only pursuant to Project Implementation Orders (PIOs) issued by AID.

F. Unless otherwise specified in the applicable PIO or Project Implementation Letter (PIL), the procurement of commodities imported specifically for the Project and financed with the AID contribution referred to in Block 3 of this Agreement shall be subject to the provisions of AID Regulation 1.

G. Unless otherwise agreed by the parties or otherwise specified in the applicable PIO, title to all property procured through financing by AID pursuant to Block 3 of this Agreement shall be in the Grantee, or such public or private agency as it may authorize.

H. (1) Any property furnished to either party through financing by the other party pursuant to this Agreement shall, unless otherwise agreed by the party which financed the procurement, be used effectively for the purposes of the Project in accordance with this Agreement, and upon completion of the Project, will be used so as to further the objectives sought in carrying out the Project. Either party shall offer to return to the other, or to reimburse the other for, any property which it obtains through

financing by the other party pursuant to this Agreement which is not used in accordance with the preceding sentence.

(2) Any funds provided to either party pursuant to this Agreement which are not used in accordance with this Agreement, shall be refunded to the party providing the funds.

(3) Any interest or other earnings on funds provided by AID to the Grantee under this Agreement will be returned to AID by the Grantee.

I. (1) If AID and any public or private organization furnishing commodities through AID financing for operations hereunder in the cooperating country, is, under the laws, regulations or administrative procedures of the cooperating country, liable for customs, duties and import taxes on commodities imported into the cooperating country for purposes of carrying out this Agreement, the Grantee will pay such duties and taxes unless exemption is otherwise provided by any applicable international agreement.

(2) If any personnel (other than citizens and residents of the cooperating country), whether United States Government employees, or employees of public or private organizations under contract with, or individuals under contract with AID, the Grantee or any agency authorized by the Grantee, who are present in the cooperating country to provide services which AID has agreed to furnish or finance under this Agreement, are under the laws, regulations or administrative procedures of the cooperative country, liable for income and social security taxes with respect to income which they are obligated to pay income or social security taxes to the Government of the United States of America, for property taxes on personal property intended for their own use, or for the payment of any tariff or duty upon personal or household goods brought into the cooperating country for the personal use of themselves and members of their families (not including such personal or household goods as may be sold by any such personnel in the cooperating country) or if any firm, not normally resident in the cooperating country, is liable for income, receipts, or other taxes on work financed by AID hereunder, the grantee will pay such taxes, tariff, or duty unless exemption is otherwise provided by any applicable international agreement.

J. If funds provided by AID are introduced into the cooperating country by AID or any public or private agency for purposes of carrying out obligations of AID hereunder, the Grantee will make such arrangements as may be necessary so that such funds shall be convertible into currency of the cooperating country at the highest rate which, at the time the conversion is made, is not unlawful in the cooperating country.

K. AID shall expend funds and carry on operations pursuant to this Agreement only in accordance with the applicable laws and regulations of the United States Government.

L. The two parties shall have the right at any time to observe operations carried out under this Agreement. Either party during the term of the Project and for three years after the completion of the Project shall further have the right (1) to examine any property procured through financing by that party under this Agreement, wherever such property is located, and (2) to inspect and audit any records and accounts with respect to funds provided by, or any properties and contract services procured through financing by, that party under this Agreement, wherever such records may be located and maintained. Each party, in arranging for any disposition of any property procured through financing by the other party under this Agreement, shall assure that the rights of examination, inspection and audit described in the preceding sentence are reserved to the party which did the financing.

M. AID and the Grantee shall each furnish the other with such information as may be needed to determine the nature and scope of operations under this Agreement and to evaluate the effectiveness of such operations.

N. The present Agreement shall enter into force when signed. Either party may terminate this Agreement by giving the other party thirty (30) days written notice of intention to terminate it. Termination of this Agreement shall terminate any obligations of the two parties to make contributions pursuant to Blocks 3 and 4 of this Agreement, except for payments which they are committed to make pursuant to noncancellable commitments entered into with third parties prior to the termination of the Agreement. It is expressly understood that the obligations under paragraph H relating to the use of property or funds shall remain in force after such termination. In addition, upon such termination AID may, at AID's expense, direct that title to goods financed under the Grant be transferred to AID if the goods are from a source outside the Grantee's country, are in a deliverable state and have not been offloaded in ports of entry of the Grantee's country.

O. To assist in the implementation of the Project, AID, from time to time, may issue PILs that will furnish additional information about matters stated in this Agreement. The parties may also use jointly agreed-upon PILs to confirm and record their mutual understanding on aspects of the implementation of this Agreement.

P. The Grantee agrees, upon request, to execute an assignment to AID of any cause of action which may accrue to the Grantee in connection with or arising out of the contractual performance or breach of performance by a party to a direct U.S. Dollar contract with AID financed in whole or in part out of funds granted by AID under this Agreement.

S/LEONE/WAAC STATUS REPORT
6/30/82

698-0407.18

	OBLIGATED	DISBURSED 6/30/82	EST. ACCRUALS -	UNLIQUIDATED BAL.
ROYEIMA VILLAGE WATER SUPPLY 698-0407.18				
Limited Scope Grant Pro Ag dtd. 3/4/81				
GDAA-81-21636-AG17				
PACD June 1982				
Water Chlorination	525.00	525.00	-	-
Construction Materials	12,265.13	12,265.13	-	-
Pipes & Fittings	21,187.40	21,187.40	-	-
CRS Advance Balance	15,988.47	-	-	15,988.47
UNCOMMITTED	34.00	-	-	34.00
TOTAL FY 81 FUNDS:	$50,000.00	$33,977.53	-	$16,022.47