PD-ABQ-929
99448

# INSTALLATION STRATEGY REPORT

FOR

EMERGENCY HEAT AND POWER PROJECT NO 1

FOR

MONGOLIAN FUEL AND ENERGY MINISTRY

FEBRUARY 1993

UNITED ENGINEERS & CONSTRUCTORS INC

## EMERGENCY HEAT AND POWER PROJECT NO. 1

## INSTALLATION STRATEGY REPORT
## TABLE OF CONTENTS


| | | PAGE |
|---|---|---|
| 1 0 | EXECUTIVE SUMMARY | 1-1 |
| 2 0 | PURPOSE AND SCOPE | 2-1 |
| 3 0 | RECOMMENDATIONS FOR EQUIPMENT/SYSTEMS | 3-1 |
| 4 0 | PROCUREMENTS | 4-1 |
| 4 1 | Equipment Procurement Procedures | 4-1 |
| 4 2 | Equipment Shipping and Acceptance Procedures | 4-2 |
| 4 3 | Other Power Plant Equipment | 4-5 |
| 4 4 | Mining Equipment | 4-6 |
| 4 5 | Instrumentation and Controls Modifications | 4-7 |
| 4 5 1 | Overview | 4-7 |
| 4 5 2 | Existing Conditions | 4-10 |
| 4 5 3 | Description of Modifications | 4-11 |
| 4 5 4 | Installation Plan | 4-12 |
| 4 5 5 | Testing/Checkout Procedures | 4-13 |
| 4 5 6 | Acceptance Schedules | 4-17 |
| APPENDIX A | Procurement Lists and Engineering and Procurement Schedule | |
| APPENDIX B | I&C Trip Report - July 1992 | |
| APPENDIX C | Project Memoranda Furnace Explosions-The Mongolian Experience | |
| APPENDIX D | Boiler Availability Analysis | |
| APPENDIX E | Nilakah Mine Gas Detectors | |
| APPENDIX F | Instrumentation and Control Drawings | |

## 1 0 EXECUTIVE SUMMARY

United Engineers & Constructors Inc (UE&C) conducted feasibility studies funded by a U S Trade and Development Program grant (TDP) under a contract with the Mongolian Fuel and Energy Ministry (Ministry) to evaluate the conditions and needs of the energy sector,including power plants, electric power transmission and dispatch facilities and district heating systems Included as a part of the studies were evaluations of the energy sector, district heating, dispatch facilities and energy sector organization, management, accounting revenue and information systems

The effort included on-site surveys, interviews and meetings with Ministry personnel to review findings, develop budgetary cost estimates and make recommendations for equipment, material or structures replacement, repair or upgrade

As a result of this effort UE&C identified a need to assist the Ministry in procurement of critically needed spare parts for its power and heating plants This subsequently resulted in a contract to UE&C by US AID (AID) titled or known as the Mongolian Emergency Heat and Power Project No 1 Soon after the contract to provide assistance for the power plant sector was signed, UE&C was requested by AID to provide assistance in the coal mine sector Because UE&C lacked technical expertise in coal mining engineering and operations and maintenance, AID initially utilized Parsons-Maine, Inc (PMI) to assist UE&C, which focused on coal mine sector procurement Later in the project PMI's assistance was withdrawn and AID instructed UE&C to issue a sole source subcontract to Morrison-Knudsen Corp (M-K) to provide coal mine sector technical assistance

This project initially involved the engineering, design, procurement, delivery and installation of equipment for all of the Ministry's major power plants plus an effort to provide instrumentation and controls for the coal pulverizing systems at Plant No 3 in Ulaanbaatar during the winter heating season of 1992-1993 The controls upgrade was required to mitigate frequent explosions at this plant The required equipment for the power plant sector and their order of importance were developed during the discussions and on-site surveys performed in developing and completing the feasibility study of the TDP project

In addition to having operational control over Mongolia's power plants, heating plants and coal mines, the Ministry also controls two semi-independent procurement companies, one for power and heating plant procurement (Erchim Impex) and one for coal mine procurement (Nuurs Co ) The maintenance entry order and tracking systems in the power and heating plant sector are entirely manual with no adequate methods to track priority equipment/commodity needs Consequently, Erchim Impex ends up with large procurement lists for all power plants with little ability to

distinguish priorities from one plant to the other Additionally, the procurement cycle tends to reflect annual requirements based on central planning concepts left over from Mongolia's recent past

As indicated previously, the initial power sector needs and priorities were reflected in a list of needed procurements developed by UE&C at the conclusion of the TDP study The methodology employed in the development of this list involved a series of meetings with the chief engineers of all of the significant power plants in Mongolia At these meetings, individual plant O&M needs were identified, prioritized and then force ranked for the power sector as a whole Subsequent to this effort AID and PMI personnel visited Mongolia without UE&C and met with Erchim Impex and Nuurs personnel This resulted in a different procurement list which was based on procurement priorities largely reflecting the procurement organizations' needs and priorities which did not, in cases, reflect the O&M needs of the power plants UE&C did not discover that key operations personnel were not involved in the PMI/AID meetings in Mongolia until much later in the project This resulted in much confusion and wasted time/effort in the power sector

It was discovered that there was wide spread confusion within the Ministry's procurement organizations (Nuurs and Erchim Impex) regarding the details of the AID assistance project Nuurs and Erchim Impex personnel both clearly believed that AID would simply transfer U S dollars to them for procurement Thus, they entered into a series of "contracts" with Commonwealth of Independent States (CIS) Original Equipment Manufacturers (OEM's), without sufficient funds During a joint UE&C/AID meeting with the Ministry early in the project, AID's Mission Officer clearly stated that AID would not provide funds to cover these "contracts" Unfortunately, a prime driving force behind these procurement organizations was not to focus on operational maintenance needs, but rather to focus on procurement to "pay off" these "contracts"

In general, this was not the case in the coal mine sector The prime reason for this is that Nuurs has a much closer and more coordinated involvement with coal mine operations than Erchim Impex does with power and heating plant operations Another factor is the relative magnitudes of power sector procurement as compared to coal mine sector procurement (more power plants than coal mines and more parts/commodities in a power plant than in a coal mine operation) An obvious solution to these problems is a computer based maintenance order entry and tracking system for power plants and coal mines The need for this was identified and quantified by UE&C in the TDP feasibility study Copies of a report dealing with this issue were provided to AID by UE&C

For cost and schedule reasons, the majority of the mechanical parts and commodities needed in both the power/heating plant and coal mine sectors could only be provided by the original equipment manufactures (OEMs) in the Former Soviet



4

provided by the original equipment manufactures (OEMs) in the Former Soviet Union or Commonwealth of Independent States (CIS) Making procurements in the CIS is extremely difficult and specialized procedures had to be developed to accomplish this (see section 4 1) Until the mechanical equipment for which parts are required is retired or replaced, this will always be true However, if more time and money becomes available, more procurement can be made in the U S The approximate dollar value of CIS procurement will ultimately amount to approximately $5,392,000 The dollar value of U S procurement will amount to approximately $3,147,000, including freight forwarding costs The total dollar value of the UE&C/AID contract is $10 6 million, including change orders of $500,000 and $1 3 million

The overall success of this project (which can only be qualitatively established with the passage of time) was adversely impacted by two significant events The first is the late date of contract signing (September 30, 1992, two weeks before the start of the heating season) and the second was the almost total cessation of rail freight movement in the Russian rail system There were reasons for both of these events but there proved to be precious little that UE&C could do about them



5

## 2 0 PURPOSE AND SCOPE

The purpose of the AID Grant Project to the Government of Mongolia (to the Fuel and Energy Ministry) is to assist the Mongolians in their attempt to provide reliable heat and power to the population during the 1992-1993 heating season Plans include future assistance projects for the 1993-1994 heating season and beyond Unfortunately, the funding available falls far short of the needs of the power and coal mining sectors Even though we "force ranked" all procurements with prioritized lists, all of the items on the lists were and are high priority/urgently needed items In retrospect there was probably too much attention paid to the position of the various procurement items on the lists

A major problem area was the continuing debate about how much to spend on coal mine procurements versus power and heating plant procurements The two organizations within the Ministry each made convincing arguments which had equal validity The coal mine position was that, "If you can't get coal to the power plants, you won't be able to operate them thus, there would be no heat and power" The power and heating plant position was that, "No matter how much coal you provide to the power and heating plants, if the plants are in such poor shape that they won't run, it makes no difference how much coal you deliver to the plants, there still won't be any heat or power" For the time being, the coal mine people seem to be prevailing, however both sectors still need massive assistance

UE&C's efforts have been largely devoted to making procurements in both the U S and the CIS, however some engineering and design work was required in order to accomplish the procurement tasks as will be seen in the sections that follow The project has had two mutually exclusive objectives (1) procure as much as you can in the shortest amount of time and (2) "buy American" Because of the labor and transportation cost issues, "buy American" always looks longer and was more expensive The long view is that American products are better made and will last longer and this is generally true The problem is that the Mongolian's needs are immediate, critical and massive, all of which tends to support CIS procurements Obviously, medium and long term projects are needed to compliment this short term AID project



6

## 3 0 RECOMMENDATIONS FOR EQUIPMENT AND SYSTEMS

Early in the project, the AID Mission Officer in Ulaanbaatar laid out the ground rules by which equipment procurements were to be made UE&C made evaluations of procurement needs based on site visits to the plants and discussions with O&M and Ministry personnel Later in the project, this was expanded to include similar discussion by M-K personnel with coal mine O&M and Ministry personnel The Mission officer was to be the "final approval authority" on procurements As it turned out, there were differences in priorities and project direction between the Mission Office and AID/Washington Primarily due to physical communication problems between Mongolia and the East Coast of the U S , the addition to and deletion of items from the procurement list was difficult and caused some frustration to the various parties involved

The joint power/heating plant and coal mine procurement lists were reviewed with AID and force ranked These items were put on an engineering and procurement schedule by UE&C which became a living document" as a result of numerous priority changes which, in turn, were driven by changing O&M needs and (as mentioned earlier) by conflicting objectives within the Ministry (namely, the objectives of the operating personnel and those of the procurement organizations which were not always the same )

The various procurement lists and engineering and procurement schedule are included in Attachment A

The major recommendations at this point in time are

1 Start the next procurement cycle as soon as possible, but no later than four months prior to the start of the heating season (May 15, 1993)

2 Develop prioritized procurement lists for the 1993-1994 heating season as soon as possible

3 Provide direction from either Washington or Mongolia, but not from both

4 Fund a computer based maintenance order entry and tracking system for the Ministry to use



9

## 4 0 PROCUREMENT

### 4 1 EQUIPMENT PROCUREMENT PROCEDURES

UE&C's procurement procedures for traditional procurements have been sent to AID previously in an earlier report transmittal These procedures are generally followed for procurement Only in extenuating circumstances were exceptions made and always with AID's written concurrence Examples include several sole source procurements such as the sole-source subcontract to Morrison-Knudson Corp (M-K) for technical assistance in the coal mine sector This, and a number of equipment sole-source procurements were made, with AID's written authorization or at AID's written direction

All U S procurements (including several from U S subsidiary companies in Europe and Japan) were purchased on a F O B factory basis UE&C's freight forwarder, AN-MAR, arranged for rail, truck, air and ocean transport, as appropriate, to Mongolia AN-MAR's transportation and related costs are included in the equipment cost numbers for U S Procurement reported elsewhere in this report

Commonwealth of Independent States (CIS) procurements were purchased F O B Mongolia (Ulaanbaatar and, in some cases, various coal mine sites) The prime reasons for this were that (1) even with AN-MAR's assistance, there were enough unknowns with which to be concerned and (2) the Ministry's procurement organizations, NUURS and Erchim Impex, both assured UE&C that making the CIS Original Equipment Manufacturer's (OEM's) responsible for rail freight had always worked in the past and was the best way to proceed

For most, but not all, CIS procurements, NUURS or Erchim Impex personnel provided UE&C with CIS OEM "contract information" (names, phone and FAX or Telex numbers, factory addresses, etc ) and in many cases prior "contracts" which had been negotiated with the CIS OEM's As noted earlier in this report, these "contracts" were inexecutable because the Ministry did not have the funds to pay for the procurement items Nonetheless, the "contracts" served the project well as UE&C procurement personnel were generally able to obtain unit pricing which was lower than that contained in the "contracts "

Because of the time zone differences (generally, 7 to 8 hours), poor (and in some cases non-existent) telephone and FAX communications, and language barrier, the CIS procurements were extremely difficult The task of obtaining competitive bids was long and arduous In many cases sole-source contracts had to be negotiated UE&C ultimately was forced to send procurement personnel to Moscow to conduct negotiations and sign purchase orders (on two separate occasions ) The UE&C procurement team included a purchasing agent and a project engineer who was fluent in Russian UE&C developed many valuable personal contacts in and outside of Moscow who ultimately made the CIS procurement effort successful The inclusion of UE&C's project engineer, who had lived and worked in the Soviet Union for 22 years, on the procurement team was essential to our success A number of techniques was developed by this engineer which served the project well, the most notable being the preparation of brief (1 to 3 page) "demi-purchase" orders which were split down the middle of the page, the left hand portion in English, the right hand portion in Russian To the maximum extent possible, these and other procurement documents were transmitted to the bidders in advance of UE&C's procurement team arrival in Moscow This maximized their efforts (minimized wasted time)



4

UE&C made a total of three separate trips to the CIS to prepare for and make CIS procurements In February 1993 the Russian railroad system became congested to the point of almost total stoppage UE&C was aware of some of the reasons for this prior to making the third procurement related trip One of the main objectives of this trip was to understand and try to alleviate some of these problems which are causing significant slippage in shipping/delivery dates Subsequent to issuing this report, UE&C will issue a brief report dealing with this situation in detail At this writing, the prime reasons for the blockage include the following (not necessarily listed in order of importance)

1 Due to the independence from central planning and control by Moscow, all of the former Soviet Republics now have their own customs and railroad systems, thus coordination and traffic problems have developed

2 There is a significant increase in trade between China and the CIS There are only three points where rail traffic can pass directly between China and Russia and all three are backed up due to the rail gauge differences between the Chinese and Russian tracks Mongolia is attempting to take some of this traffic by opening up a fourth point at the Chinese/Mongolian border

3 Relatively low level rail yard (and probably upper level) personnel are using the new conditions they find themselves operating in to insist on direct payments in order to move rail freight through the yards and other switching points

4 Vandalism and rail car (and train) hijackings occur in the road system

## 4 2 EQUIPMENT SHIPPING AND ACCEPTANCE PROCEDURES

### 4 2 1 General

The delivery procedure depends upon the source of origin and method of shipment However, all deliveries have these common elements

1 Packaging must suit the means of transport (air versus ocean and/or rail) Packaging requirements are more stringent/sturdy for ocean and/or rail shipments In either case packaging should be suitable to protect the contents from damage from the elements

2 Packages must be properly marked, indicating AID label, country of origin, package number (1 of N, 2 of N, --N of FN), package dimension and weight, and P O Number

3 The following documentation should accompany the shipment and be forwarded ahead to the receiving party

- Bill of Lading
- Commercial Invoice
- Packing List
- Certificate of Origin
- Shipping Inspection Certificate (at origin)
- Export License (if applicable)



9

4 The shipment must be insured and the consignee is the Ministry of Fuel & Energy in Ulaanbaatar

4 2 2 Current Shipping and Acceptance Procedures - CIS Shipments

a Upon presentation (via FAX) of shipping documents (commercial invoice, bill of lading from rail/air/truck carrier, packing list, etc ) to UE&C, UE&C does the following

1 Issues partial payment (10 to 20%) to vendors's designated bank account

2 Sends shipping documents (via FAX or express courier) to AN-MAR so that they arrange for insurance at 110% of the purchase order price AN-MAR then sends shipping documents (via FAX) to Mongoltrans

b When Mongoltrans receives shipping documents from AN-MAR, they will immediately notify both NUURS and UE&C's Jerry Paradysz

c When Mongoltrans (the "notify party") receives notification from the rail authorities that a shipment has cleared the border with Russia (or is about to do so), Mongoltrans notifies NUURS and UE&C's Jerry Paradysz of the anticipated time and location of arrival Jerry Paradysz then confirms that he will jointly inspect the shipment with the NUURS representative (hopefully Altangeral or another person fluent in English)

d Jerry Paradysz contacts the local insurance surveyor (Mrs Chulunsetseg) and attempts to have her present during the inspection

e Mongoltrans clears the shipment through customs

f The people noted above make a joint inspection and the NUURS representative receives and signs for the shipment on behalf of the Ministry of Fuel & Energy certifying that it is complete and in good condition, and provides this certification to UE&C (Jerry Paradysz) NUURS keeps a copy of this certification for the Ministry's records NOTE If there is a shortage or damage in the shipment, the insurance surveyor must file a claim to cover the loss or shortage If a claim has to be filed, the insurance surveyor must be present to make an independent inspection (**before** the packing is tampered with, **before** the shipment is moved from its arrival site and **before** the equipment is operated or used

g After the following actions have occurred, Jerry Paradysz provides UE&C, Boston (via FAX) with a copy of his signed inspection certification and the Ministry's signed receipt certification If partial shipments arrive and are inspected and signed for, those partial certifications must be FAXED to UE&C, Boston without holding them up for the balance of the shipment

h Upon receipt of the "inspection and receipt" certifications referred to above, UE&C releases the remainder of the purchase price to the vendor In cases where insurance claims are filed, UE&C will work with the insurance carrier to settle the case and release partial payments as appropriate subject to insurance requirements

i After taking receipt of the shipments, NUURS is responsible for all remaining transportation costs

4 2 3 Current Shipping and Acceptance Procedures - U S (and other Western origin) Shipments

a Upon presentation of shipping documents (commercial invoice, bill of lading from rail/air or truck carrier, packing list, etc ) to An-MAR, AN-MAR does the following

1 Arranges for insurance at 110% of the purchase order price

2 Ships the equipment/material via ocean or air and rail and/or truck

3 Provides copies of shipping documents to UE&C, Boston UE&C then pays 100% of the purchase price to the vendor

4 Sends shipping documents (via FAX) to Mongoltrans

b When Mongoltrans receives shipping documents from AN-MAR, they will immediately notify both NUURS and UE&C's Jerry Paradysz

c When Mongoltrans receives notification from AN-MAR that a shipment is due to arrive in Ulaanbaatar, Molgoltrans notifies NUURS and UE&C's Jerry Paradysz of the anticipated time and location of arrival Jerry Paradysz then confirms that he will jointly inspect the shipment with the NUURS representative (hopefully Altangeral or another person fluent in English)

d Jerry Paradysz contacts the local insurance surveyor (Mrs Chulunsetseg) and attempts to have her present during the inspection

e Mongoltrans clears the shipment through customs

f The people noted above make a joint inspection and the NUURS representative receives and signs for the shipment on behalf of the Ministry of Fuel & Energy certifying that it is complete and in good condition, and provides this certification to UE&C (Jerry Paradysz) NUURS keeps a copy of this certification for the Ministry's records NOTE If there is a shortage or damage in the shipment, the insurance surveyor must file a claim to cover the loss or shortage If a claim has to be filed, the insurance surveyor must be present to make an independent inspection (**before** the packing is tampered with, **before** the shipment is moved from its arrival site and **before** the equipment is operated or used

g After the following actions have occurred, Jerry Paradysz provides UE&C, Boston (via FAX) with a copy of his signed inspection certification and the Ministry's signed receipt certification If partial shipments arrive and are inspected and signed for, those partial certifications must be FAXED to UE&C, Boston without holding them up for the balance of the shipment

h In cases where insurance claims are filed, UE&C will work with the insurance carrier to settle the case

i After taking receipt of the shipments, NUURS is responsible for all remaining transportation costs

4 2 4 Miscellaneous

a If shipments are received and accepted without UE&C or the insurance surveyor being present, then either NUURS or UE&C in consultation with NUURS, as applicable, must document, in writing, the reasons for noncompliance with the procedures outlined above In no cases, regardless of the circumstances, should the requirements outlined above be waived After-the-fact certification should be avoided, but may be provided in extenuating circumstances if there are no shortages or damages

b NUURS may be called on from time to time to provide additional services, such as assisting with incoming shipments (as for the commercial air charter unloading, prior to customs clearance, and delivering equipment to UE&C's Mongolian office) Their compensation for these services will be from their operating budget or via the Ministry and not by project funds

c Some of the CIS vendors wish to accompany their shipments into Mongolia to witness the inspection and receiving process Given that their final payment is tied to the successful inspection and receiving function, they have every right to do so Because NUURS is the Ministry's official representative, they must accommodate the CIS vendors in this regard This means that NUURS should expedite letters of invitation, including follow up if this task is delegated to others, which are needed for visas, and assist with suitable in-country accommodations for them Note that the CIS vendors' Mongolian expenses are for their account, not the Ministry's, UE&C's, Mongoltrans' or AIDS

d Regarding problem resolution, any difficulties should be resolved between Mongoltrans and/or NUURS and Jerry Paradysz in Mongolia If problems cannot be resolved in this manner, UE&C's Boston office should be contacted at (617) 422-5266, FAX (617) 338-6239 The personnel to contact, in order of precedence, are Rick Kelley, Phil Cabral and Paul Klisiewicz

4 3 OTHER POWER PLANT EQUIPMENT

Power plant equipment was engineered, procured and delivered in accordance with the order of priority lists for needed power plant equipment, components, replacement parts and consumable items

The order of priority in these lists were revised from time to time as problems arose and failures occurred in the plants

The work was accomplished in accordance with the funds available and allotted for the effort and resulted in the procurement and delivery of the following items

- Pulverizer gear parts
- Boiler tubing
- Bearings
- Conveyor belting
- Chemicals including $Na_3PO_4$, NaOH, $CAC_2$, Activated Coal, Cationite, $NH_3$



12

- Strip chart recording paper
- Babbitt ingots for plain bearings
- Test equipment for UE&C's start-up crew
- Satellite communications dish for UE&C's in-country office
- Computer hardware and software for UE&C's in-country office
- FAX machine for UE&C's in-country office
- Miscellaneous office equipment for UE&C in-country office
- 5K diesel generator set for UE&C's in-country office
- Two-way radios for I&C effort
- Power plant pinion bearings

The installation of all items of equipment (other than I&C components for Power Plant No 3) and use of the consumable items is the responsibility of the Ministry and various power plant management and staff UE&C does not provide field personnel to supervise or assist in this work

## 4 4 MINING EQUIPMENT

The engineering, procurement and delivery of mining equipment and replacement parts to assure an adequate supply of coal for the power plant was integrated into the project after the power plant effort began Based on the recommendations of UE&C's sub-contractor for technical assistance for coal mines, Morrison-Knudson Co , and Parsons-Main, Inc (under a separate contract with AID) order of priority lists for needed coal mining equipment and replacement parts were developed

The procurement and delivery of these items was accomplished in accordance with the funds available and allotted for the effort and resulted in the procurement and delivery of the following items

- A Variety of Different Diameter Wire Ropes
- A Variety of Various Widths of Conveyor Belting
- Flexible Ventilation Pipe or Ducting
- Portable Gas Detectors
- Bull Dozers
- Detonation Cord
- Copper Wire for Rewinding Motors
- House Rollers/Shafts for Draglines
- Generators for Draglines
- Excavator Compressor
- Brushes for Electric Motors
- Trailing Cable for Draglines, Excavators and Drill Rigs

- Truck Engine Spare Parts
- Excavator Spare Parts
- Locomotive Rebuilds
- Explosives
- New Excavator and Parts
- Tires and Tubes for Haul Trucks
- Vehicle Batteries for Haul Trucks
- Excavator Motors
- Dragline Bearings

The installation of the items of equipment for the coal mines is the responsibility of the Ministry, and its staff and personnel UE&C does not provide field personnel to supervise or assist in this work

## 4 5 INSTRUMENTATION AND CONTROLS MODIFICATIONS

### 4 5 1 Overview

Power Plant No 3 in Ulaanbaatar, Mongolia is designed to generate electricity and to provide hot water to the central heating system in Ulaanbaatar which provides heat during the winter time and domestic hot water all year long The plant is a coal fired plant and is built with all Russian equipment including the boilers and turbine - generators The plant has six (6) low pressure boilers, seven (7) high pressure boilers, four (4) high pressure turbines, each rated at 25 MWe, and four (4) low pressure turbines, each rated at 12 MWe

The plant provides steam to heat the water for the heating requirements of the city, industrial steam to local industry, and electrical power to the central power grid

The TDP studies performed by UE&C determined that the physical condition of Power Plant No 3 is in a deplorable state due to the lack of availability of spare parts from Russia and the lack of hard currency by the Mongolian Government to make purchases on the world market

The condition of the plant has resulted in numerous shutdowns in the recent past which resulted in loss of heat to the inhabitants of the capital city The shutdowns were caused by individual pieces of equipment failing and especially by explosions in the coal pulverizers which prepare the coal for firing in the boilers

It was determined that the explosions in the pulverizers are the result of inadequate and non-functioning instrumentation and controls which operate the entire coal feed system and the pulverizers This instrumentation should, among other things, control the amount of air used to transport the fuel and its temperature which plays an important part in the prevention of explosions in the system



14

Therefore, to keep this plant operational during the winter of 1992-1993, the work scope required the replacement of individual items of equipment which were on the verge of failure, the provision of urgently needed consumable items deemed necessary for plant maintenance and upkeep and the provision of instrumentation and control equipment and systems which would be integrated with and enhance the existing coal feed system to correct the cause of of, minimize or eliminate the explosions

Based on engineering studies, on-site evaluations and discussion with O&M and Ministry personnel, specific recommendations were developed to identify and reduce or eliminate the cause of explosions at Power Plant No 3 in Ulaanbaatar, The corrective actions indicated the requirement for an automatic control/instrumentation system to reduce explosion frequency and resulting down time

The recommendations and procurement plan for the work effort in the area of instruments and controls at the No 3 Power Plant are

- New transmitters to replace the current units
- Replacement motors for the damper drives
- Provide loss of coal flow alarm for feeders
- New RTDs for pulverizer outlet temperature
- New RTDs and meters to monitor transport air temperature
- New controllers for pulverizer temperature and pressure
- New damper operators for the coal pulverizing mill flow control dampers on low pressure boilers
- New scanners and cooling air fans for the high pressure boilers

The above recommendations for the work effort in the area of instruments and controls were based on the following

1 Motors are required to make the damper drives work The operator now opens and closes the pulverizer dampers by hand During meetings with power plant personnel it was stated that the gear box was in working condition but the electric motor drives did not work The pulverizer outlet pressure and temperature controls require these drives to be operational

2 RTDs and Pressure transmitters were added to provide information on the pulverizer outlet temperature If the pulverizer outlet temperature goes high, a coal explosion may occur If the temperature is low then the coal is not dry and will eventually hang up in the pulverizer coal bunker In the mean time boiler combustion efficiency will be low

3 Pulverizer outlet temperature and pressure controllers try to maintain a given setup This will not work without item one and two above

4 When the pulverizer is out of service, the transport air bypasses the pulverizer and enters the system just before the pulverizer air fan (primary air fan) An indication of the transport air temperature was not available Therefore, an RTD and indicator has been added to display this temperature to the operator



15

5 Low pressure boilers now have an air flow control damper which is operated manually A damper drive needs to be added to make it automatic This makes the control philosophy the same as that of the high pressure boilers and keeps the logic simple The logic needed to control or drive the hot air and tempering air dampers by both flow and temperature could be programmed using programmable logic controllers However, an attempt has been made to keep this logic as simple and inexpensive as possible

6 An alarm is not included in the existing system to alert the operator of a blockage of coal within the raw coal supply bunkers Studies show that pulverizer explosions occur during the start up or shut down of a pulverizer The operator currently does not have indication that fuel is not flowing into the pulverizer This is the first step to alert the operator The feeder controls are not automatic and upgrading them to automatic was not part of this change, but can be done at a later date as part of a control system upgrade

7 Scanners should be added to the high pressure boilers to alert the operators of the blockage of coal to the burners This would indicate a problem with the coal feeder, transport air or hang up in the pulverized coal bunker The operator on a high pressure boiler is unable to view the flame from the control room A few boilers do have furnace scanners but this would require both pulverizers to fail at the same time The scanners being added to the system are at each burner The operator will see three lights appear and will have to take the correct action to shut down the pulverizer system This information/alarm system is a first step to avoid the loss of coal and subsequent re-ignition, a major cause of explosions

8 A detailed look at the number of 1991 explosions indicates that poor operation and maintenance may be a major cause of explosions Power Plant No 3 has some boilers that had no major explosions However, pulverizer No 7A had eleven major explosions, No 1 had six and No 10A also had six explosions

In the area of the instrumentation and controls, the current modifications and changes being carried out are designed to permit expansion in the future Therefore, it is recommended that the following equipment be considered for future procurement for the boiler control systems

- Boiler drum level control
- Superheater temperature control
- Air flow control
- Furnace pressure control

These additional controls will permit the plant operators to gain control of the steam header pressure by way of the boiler master controls to enhance the current arrangement of automatic control of boiler drum level only These additional controls will permit smooth efficient automated operation of the boilers including their fuel supply and steam output

It is noteworthy that much of the controls work indicated above needs to be accomplished at other plants (especially the Darkhan Power Plant) However, even though other plant control systems are in an equally dilapidated state, UE&C focused on the No 3 Power Plant because it was the only one with severe explosion problems

4 5 2 Existing Conditions

The current control system offers little more than a remote indication of the boiler operation UE&C reviewed the operation of the ball mill coal pulverizers in an attempt to reduce the number of explosions based on 1991 data

Project funding available for controls improvement was projected to be on the order of $750,000 for 1992 Funds were not available for improvements at the Darkhan Power Plant The approach to this limited project scope was to furnish some basic devices to alert the operator of problems and provide basic control of the pulverizer systems

Steam generators in operation in the United States normally have a burner management system (BMS) which requires the operator to follow a fixed and safe procedure to start a boiler Predetermined safety logic and controls are the heart of these systems Such a system will also stop fuel flow to the boiler, if a predetermined unsafe condition is found During the review of the plant in Mongolia, it was found that the Russian designed systems required a fifteen minute purge of the boiler A boiler in the United States would normally require five minutes for purge During this purge period fuel cannot be fired and fuel valves have to be proven closed The boilers at Power Plant No 3 had a BMS at some point The high pressure boilers still have flame scanners which view the furnace flame However, the fuel trip valves no longer operate Except for the remains of the fuel trip valves on the low pressure boilers, little remains of the safety system The boiler operator is left to start the boiler with as much or as little safety as he or she believes is necessary The plant has a basic training course available, but the skill of the operator is a part of the overall problem A fixed start-up sequence would improve safety, but would also cause boiler trips

Installation of a complete burner management system for every boiler cannot be considered at this time because the cost of one complete burner management system would deplete the available funds

The plant (I&C) staff makes every attempt to keep the indicators on the control board operational However, new transmitters are required to provide a workable system The motor operators on the damper drives are in very poor condition and require new motors to be able to operate the system from the control board The basic control philosophy is similar to current United States coal boilers, however, these boilers are not in automatic control due to spare parts problems It is not a question of buying spare parts for the current control system The manufacturing of the damper drive motors was discontinued some fifteen years ago by the Russians The Mongolians will have to adapt motors of the same horsepower and electrical characteristics but with different shaft and mounting dimensions

The existing control systems are similar to systems manufactured in the United States during the fifties and sixties Unfortunately, some of these systems had to be changed because of lack of spare parts An example of the difference in control philosophy would be boiler drum level control While the basic control logic is the same, a United States power plant will normally have three or more ways to monitor drum level in the control room On the high pressure boilers in the Mongolian plant only one way is available which is the pen chart recorder If this one level indicator goes bad the operator is blind to a possible problem



17

The high pressure boilers are monitored from two (2) remote control rooms which also control/monitor the high pressure turbine generators The low pressure boilers are monitored from local control boards or panels located at the burner fronts on the main operating floor

4 5 3 Description of Modifications

Below is a description of the modifications and changes to pulverizer controls to be implemented by the UE&C team in Mongolia These changes represent the "bare minimum" needed to obtain automatic control of key combustion systems These modifications will not only improve safety and reliability, they will also result in higher combustion efficiency This in turn will result in obtaining more steam per pound of coal consumed

1 Install flame scanners on all burners on the seven (7) high pressure boiler furnaces This system will consist of one (1) cooling air blower unit, forty-two (42) flame scanners, and two (2) free standing control panels or Main Logic Cabinets (MLC)

a The cooling air blowers will consist of (2) 100% blowers and two (2) 380 VAC 50 Hz motors which require 40 amp power sources from existing plant motor control centers This blower unit will be a pre-wired free standing package The only field wiring will be from the power sources, from the fan output low pressure switches to the fan output low pressure annunciator lamp, and to the fan A or B running annunciator lamps Also required will be a cooling air header approximately six (6) inches in diameter This header will service all seven (7) boilers and will be approximately 165 meters total length

The approximately two (2) inch cooling air connections to the scanners will be tied into the cooling air header

b The forty-two (42) flame scanners will be installed one (1) on each burner, six (6) per boiler The scanners will be mounted with a sight path through the secondary air chamber in a configuration to minimize unwanted signal detection from adjacent or opposite burners This system will require field wiring from each scanner to the MLC units

c The control panel MLCs will be mounted in the two (2) respective control rooms of the high pressure portion of the plant These panels will require a 220 VAC, 50 Hertz, 5 amp power source Other field wiring to these cabinets is from the cooling air blowers, the flame scanners, and the pulverizer coal flow detectors

This part of the system will provide remote flame condition to the operators in the control room Among the benefits will be the elimination of burners overheating and glowing cherry red due to flame/air system failure without the operators being aware of this condition (observed by the UE&C survey team during the TDP study)

2 Install twenty (20) coal flow detectors on the raw coal feed chutes to the pulverizers for the seven (7) high pressure and six (6) low pressure boilers



18

These detectors will be Kay-Ray nuclear flow detectors Each detector will require 220V ac, 50 Hz power sources Each detector in the high pressure boiler system will require wiring between the detectors and the MLC panels to operate the flow/no flow annunciator lamps Each detector in the low pressure boiler system will require wiring between the detectors and the flow/no flow annunciator lamps in the low pressure boiler control panels

3 Install coal pulverizer automatic pressure and temperature controls for the high and low pressure boilers There is one (1) pulverizer per boiler in the low pressure boiler system and two (2) pulverizers per boiler in the high pressure boiler system

Each pulverizer will require a temperature and a pressure controller, plus a temperature indicator which will be used to indicate the temperature at the inlet side of the primary air fan for each boiler

The controllers and indicators for the high pressure boiler system will be in a free standing panel that will require a 220V ac, 50 Hertz power source Interconnecting wiring will be required between the resistance temperature detectors (RTD's) and the temperature controllers and indicators Interconnecting wiring will also be required between the pressure transmitters and the pressure controllers The output of the controllers will require wiring to the pulse relays necessary to energize the drive motors on the associated damper actuators

4 Install air damper control drive units for low pressure boilers The existing damper controls are manual drive units which are not suitable for automatic control

4 5 4 Installation Plan

The controls will not replace but will be in addition to the current equipment in the high pressure boiler control rooms and on the low pressure boiler panel boards

Low Pressure Boilers The new controllers and indicators will be mounted in a section of the panel which is not currently used This should permit the installation of the equipment, with the boiler on line The pulverizer fan temperature controls will be mounted in a common section of the panel Each control board is located between two boilers, with a portion of the board dedicated to the control of each boiler A section in the middle of the two individual boiler portions has common instrumentation for both boilers

The power supplies and temperature transmitters will be mounted in an unused section within the control board

The current indication of pulverizer outlet pressure and temperature will remain as is In some cases these indicators work The new controllers will also indicate the pressure and temperature, which will provide the operator with two readings

High Pressure Boilers The instrumentation and controls by Moore Products Co will be mounted in a new rack located in each of the two control rooms This will permit the installation of the equipment to be completed without any impact to the boilers in operation

The scanners arrangement will be similar, with a new cabinet located and wired without impact on the boilers in operation The current furnace scanners (as opposed to burner scanners) which view the overall furnace condition can be left in place The new scanners will be mounted on each burner to indicate the loss of individual burner flame (not currently possible)

The boiler will have to be off line for several hours when the scanners, RTD's and pressure connections are made to each pulverizer The wiring can be completed with the boilers on line

4 5 5 Testing/Check-Out Procedures

The in-country UE&C team of test and start-up I&C engineers will supervise and instruct the power plant operations staff regarding installation, testing, checkout, and operation of instrumentation and control system modifications This effort will include O&M training

The work shall include

1 Check shaft and coupling alignment for all motor driven equipment

2 Check/confirm that all power wiring to motor drives is properly installed, including proper wire gauge

3 Check/confirm that all motor drives are properly grounded

4 For each motor drive, check that any unconnected wires which may terminate in the motor housing are properly taped and insulated and protected from shorting to the motor housing or other adjacent wiring

5 Check that all motor drive junction box housings are properly gasketed and tightly closed to meet environmental integrity requirements

6 For each motor drive check that all conduit connections are secure and meet environmental integrity requirements

7 Check that each motor circuit is individually protected by fuse or circuit breaker of proper value

8 Megger test all power wiring for insulation integrity

9 Assure that motor drive and driven equipment are free to turn

10 Assure that motor drive/driven equipment is "unloaded" (or at minimum load) for initial start

11 For each motor drive, set selector switches (as applicable) to local manual control mode

12 Power up each motor circuit individually and check for short circuits and blown fuses or circuit breakers

13 At the local control pushbutton station, individually "bump" each motor drive to confirm proper wiring connections and motor rotation

14 For each motor drive set selector switch to remote control mode and repeat "bump" operation to confirm proper wiring connections and motor rotation

15 For each motor drive, confirm that start/stop pushbuttons, remote/local and manual/auto select switches, and run/stop light indications are functional and proper

16 Check all linkage/mechanical connections between actuators and driven dampers, valves, etc and confirm operating clearances

17 Assure that actuator and driven equipment are free to stroke through the complete operating range

18 Check/confirm that all power wiring to actuators is properly installed, including proper wire gauge

19 Check/confirm that all signal wiring to actuators is properly installed, including proper wire gauge and shielding

20 Check/confirm that all actuators are properly grounded

21 For each actuator, check that any unconnected wires which may terminate in the actuator housing are properly taped and insulated and protected from shorting to the housing or other adjacent wiring

22 Check that all actuator junction box housings are properly gasketed and tightly closed to meet environmental integrity requirements

23 Check that each actuator control loop is individually protected by fuse or circuit breaker of proper value

24 Megger test all actuator power and signal wiring for insulation integrity

25 Assure that actuator and driven equipment are "unloaded" (or at minimum load) for initial start,

26 For each actuator, set selector switches (as applicable) to local manual control mode

27 Power up each actuator (power) circuit individually and check for short circuits and blown fuses or circuit breakers

28 At the local control station individually stroke each actuator through its operating range to confirm proper wiring connections and response to increase/decrease signal inputs

29 For each actuator, set selector switch to remote manual control mode and repeat actuator stroking through its operating range to confirm proper wiring connections and response to increase/decrease signal inputs



21

30 For each actuator, confirm that increase/decrease pushbuttons, remote/local and manual auto select switches, control panel indications including increase/decrease light indications and analog input/output feedback displays, and limit switch operation are functional and proper

31 Check mechanical installation of temperature transmitters, including thermowell for location and compatible length of transmitter sensor

32 Confirm that temperature transmitter range is compatible with process requirements

33 Confirm temperature transmitter calibration per manufacturers test instructions

34 Check temperature transmitter signal wire connections

35 Confirm that signal wire shielding connection is <u>not</u> terminated at the temperature transmitter

36 Confirm that signal wire shielding connection is properly terminated at the control panel

37 Confirm that signal wire from the temperature transmitter is connected to the proper terminals in the control panel

38 Confirm that temperature transmitter conduit connections are secure and meet environmental integrity requirements

39 Confirm that temperature transmitter mounting is secure and free from vibration

40 Check mechanical installation of pressure and differential pressure transmitters, including root isolation valves for each process connection

41 Confirm that all pressure instrument sensing lines are continuously "sloped" toward the instrument in accordance with manufacturer's requirements

42 Confirm that all pressure instruments include local process sensing instrument isolation and drain valves

43 Confirm that all differential pressure instruments additionally include local equalization valves

44 Confirm that pressure and differential pressure transmitter ranges are compatible with process requirements

45 Confirm pressure and differential pressure transmitter calibration per manufacturers test instructions

46 Check pressure and differential pressure transmitter signal wire connections

47 Confirm that signal wire shielding connection is <u>not</u> terminated at the pressure and differential pressure transmitters

48 Confirm that signal wire shielding connection is properly terminated at the control panel

49 Confirm that signal wire from the pressure and differential pressure transmitters are connected to the proper terminals in the control panel

50 Confirm that pressure and differential pressure transmitter conduit connections are secure and meet environmental integrity requirements

51 Confirm that pressure and differential pressure transmitter mountings are secure and free from vibration

52 Place all final control elements in manual mode and start system

53 Check system operation in manual mode (pressure, temperature, flow modulation response)

54 Transfer system from manual mode to automatic mode, loop by loop, while observing that system operation is proper

55 Modify system control parameters, as necessary, to achieve proper automatic operation

56 Select and start a scanner cooling/purging air blower

57 Confirm that the blower logic system indicates the correct running status of the operating blower and the correct shutdown status of the stand-by blower

58 Shutdown the operating low scanner air blower and confirm that a low discharge pressure will initiate the start-up of the stand-by blower

59 Confirm that the blower logic system indicates the correct running status of the stand-by blower and that an alarm has sounded to indicate the blower failure and transfer

60 Repeat steps 56 through 59, but select and start the opposite scanner air blower first

61 Leave one scanner air blower running

62 For each boiler, turn on scanner cooling/purging air at each burner

63 Establish each burner in operation in turn and determine that scanners in other non-operating burners do not sense flame

64 Adjust scanner sighting and sensitivity to reliably monitor associated operating burner flame

65 Simulate a no flame condition and allow the flame monitor logic system to sound alarm and indicate flame fault for the specific burner being tested

66 When all burners are operating, confirm that the logic system indicates the individual burner operate status

67 When all burners are shutdown, after having operated, confirm that the logic system indicates the shutdown status

68 Repeat steps 62 through 67 at each boiler for all burners

4 5 6 Acceptance Schedules

All I&C equipment will have been delivered to Mongolia by early March 1993 UE&C is currently assisting the Mongolians with the installation work The projected delivery dates of remaining components will support ongoing efforts to successfully complete this portion of the project

Due to the many special language, cultural, work ethic and technical skill problems associated with this project, the possibility exists that all of the planned work will not be accomplished by the end of March or mid-April when the team is currently scheduled to leave Mongolia If necessary and funds are available, the UE&C team can be extended beyond that The key is to automate the pulverizer controls on as many high pressure and low pressure boilers as possible within remaining schedule and budget constraints

The team is training the Mongolians in the installation and operation of these control systems so that they can successfully complete the installation of any pulverizer systems on boilers which might not be completely installed by the time the team leaves Mongolia Unfortunately, it is not possible to know how long it will take to convert <u>all</u> pulverizer controls to automatic until after the first low pressure <u>and</u> high pressure boiler are completed If this project were being performed in the United States, it would take approximately 10 to 12 weeks (including unit outages of one to two days for tie-ins and check-out of each boiler, one at a time) Given the uncertainties which exist on this project, only after the first several units are converted will we be able to make reliable schedule projections However, we expect that a minimum of half of the high pressure and low pressure pulverizer systems will be completed by the end of March or mid-April

It is UE&C's opinion that the installation of the envisioned pulverizer control systems will leave the Mongolians with a favorable impression of what United States technology can do for them and allow them to build on and enhance these control systems as additional funding and projects develop

# APPENDIX A

## PROCUREMENT LISTS

## AND

## ENGINEERING AND PROCUREMENT SCHEDULE

| ITEM | SPEC No | DESCRIPTION USE LOCATION | RESP DISCPLN | EST COST ($1000) | | | SOURCE COUNTRY | SHIP DATE | ON SITE DATE | SHIPING MODE | STATUS/COMMENTS |
|---|---|---|---|---|---|---|---|---|---|---|---|
| | | COAL MINE PROCUREMENTS | | FOB UB | FOB Factory | | | | | | |
| 1 1A | 7419 | 52 MM DIA WIRE ROPE | PDC | | | S | | | | | Purchased in Russia |
| | 002 | | | | | F | RUSSIA | 28 Feb 93 | 21 Mar 93 | | Shipment Slipped to Continued Rail Problems |
| | 5029 | BAGGA NUUR MINE | MECH | 54 | | A | | | | | |
| 1 1B | 7419 | 52 MM DIA WIRE ROPE | PDC | | | S | | | | | Made Air Charter Received Inspected and Complete |
| | 002 | | | | | F | U S | | | AIR | |
| | 5029A | BAGGA NUUR MINE | MECH | | 12 5 | A | | 18 Dec 92 | 20 Dec 92 | | |
| 1 2 | 7419 | 1600 MM WIDE CONVEYOR | PDC | | | S | | | | | |
| | 002 | BELT | | | | F | RUSSIA | | | RAIL | Belting Shipped 12/26/92 Received Inspected and Complete |
| | 267 3 | BAGGA NUUR MINE | MECH | 69 | | A | | 26 Dec 92 | 7 Jan 93 | | |
| 1 3 | 7419 | FLEXIBLE VENTILLATION | PDC | | | S | | | | | Partial Shipment Made Air Charter |
| | 002 | PIPE or DUCTING | | | | F | U S | | | AIR | Balance Shipped via Ocean |
| | 225 1 | NILAHAH MINE | MECH | | 34 9 | A | | 18 Dec 92 | 20 Dec 92 | | |
| 1 4 | 7419 | MULTI STAGE WATER PUMP | DEH | | | S | | | | | P O was Placed |
| | 002 | AND MOTOR | | | | F | RUSSIA | 24 Feb 93 | 10 Mar 93 | RAIL | |
| | 238 1 | NILAHAH MINE | MECH | 25 | | A | | | | | |
| 1 5 | 7419 | PORTABLE GAS | MAD | | | S | | | | | This is a Temporary/Portable System Not the Permanent/ |
| | 002 | DETECTORS | | | | F | U S | | 17 Feb 93 | AIR | Stationary System Originally Planned |
| | 252 10 | NILAHAH MINE | I & C | | 25 | A | | 8 Feb 93 | | | Ship via Air Contains Labeled (Hazardous) Cargo |
| 1-6 | 7419 | BULL DOZERS | PDC | | | S | | | | | Bulk of Equipment is in country |
| | 002 | | | | | F | U S | | | OCEAN/ | |
| | 400 1 | SG or LOCAL MINES? | MECH | | 714 | A | | 20 Nov 92 | 22 Jan 93 | RAIL | |
| 1 7 | 7419 | ZIPPER SPLICES | PDC | | | S | | | | | Inquiry Forwarded Bids Received Item Deleted from Priority List |
| | 002 | | | | 10 | F | U S | ITEM DELETED | | | |
| | 267 4 | | MECH | | | A | | | | | |
| 1-8 | 7419 | LOCOMOTIVE BATTERIES | SCA | | | S | | | | | P O Cancelled due to Project Funding and Transport Issues |
| | 002 | | | | 18 | F | U S | ITEM DELETED | | AIR | (Weight limits on air shipments) |
| | 137 2 | | ELEC | | | A | RUSSIA | | | | |
| 1 9 | 7419 | COPPER WIRE FOR RE | SCA | | | S | | | | | P O Placed to US Manufacturer |
| | 002 | WINDING MOTORS | | | | F | U S | 2 Mar 93 | 10 Mar 93 | AIR | |
| | | | ELEC | | 21 | A | | | | | |
| 1 10 | 7419 | HOUSE ROLLERS/ SHAFTS | PDC | | | S | | | | | Rail Problems Cited |
| | 002 | ESH 15/90 DRAGLINE | | | | F | RUSSIA | 28 Feb 93 | 21 Mar 93 | | |
| | 400 10 | | MECH | 75 | | A | | | | RAIL | |
| 1 11 | 7419 | HARD FACING WELD RODS | PDC | | | S | | | | | Inquiry forwarded Bids Received Item deleted from Priority List by FEM |
| | 002 | | | | 4 | F | U S | ITEM DELETED | | AIR | |
| | 400 12 | | MECH | | | A | | | | | |

| ITEM | SPEC No | DESCRIPTION USE LOCATION | RESP DISCPLN | EST COST ($1000) | | | SOURCE COUNTRY | SHIP DATE | ON SITE DATE | SHIPING MODE | STATUS/COMMENTS |
|---|---|---|---|---|---|---|---|---|---|---|---|
| 1 12A | 7419 | GENERATOR FOR | PDC | | | S | | | | | Estimated Best Del Date |
| | 002 | DRAGLINE | | | | F | | 28 Mar 93 | 18 Apr 93 | | |
| | | ESH 10/70 | MECH | 110 | | A | RUSSIA | | | RAIL | |
| 1 12B | 7419 | GENERATOR FOR | PDC | | | S | | | | | Estimated Best Del Date |
| | 002 | DRAGLINE | | | | F | RUSSIA | 15 Mar 93 | 5 Apr 93 | | To be Confirmed at P O Placement |
| | | ESH 20/90 | MECH | 100 | | A | | | | RAIL | |
| 1 13 | 7419 | DOZER TRACKS | PDC | | | S | | | | | P O Unlikely Insufficient Funds and |
| | 002 | | | 78 | | F | RUSSIA | ITEM DELETED | | | Letter of Credit Issue |
| | 400 11 | | MECH | | | A | | | | RAIL | |
| 1 14 | 7419 | BRUSHES FOR ELEC | PDC | | | S | | | | | Estimated Best Del Date |
| | 002 | MOTORS | | 9 | | F | RUSSIA | 28 Feb 93 | 21 Mar 93 | | To be Confirmed at P O Placement |
| | | | MECH | | | A | | | | RAIL | |
| 1 15A | 7419 | EXCAVATOR COMPRESSOR | PDC | | | S | | | | | Insufficient Funds |
| | 002 | FOR ESH 10/70 13/50 6 5/45 | | 6 1 | | F | RUSSIA | ITEM DELETED | | | |
| | | | MECH | | | A | | | | | |
| 1 15B | 7419 | EXCAVATOR COMPRESSOR | PDC | | | S | | | | | Insufficient Funds |
| | 002 | FOR EKG 8I | | 3 | | F | RUSSIA | ITEM DELETED | | | |
| | | | MECH | | | A | | | | | |
| 1 15C | 7419 | EXCAVATOR COMPRESSOR | PDC | | | S | | | | | Estimated Best Del Date |
| | 002 | FOR EKG 4 6 EKG 5A | | | | F | RUSSIA | 28 Feb 93 | 21 Mar 93 | | To be Confirmed at P O Placement |
| | | | MECH | 2 1 | | A | | | | | |
| 1 16 | 7419 | DUMP CAR PARTS | PDC | | | S | | | | | Item deleted due to Insufficient funds Vendor Contact Difficultly and position on Priority List |
| | 002 | | | 33 | | F | POLAND | ITEM DELETED | | | |
| | | | MECH | | | A | | | | | |
| 1 17 | 7419 | BLAST INITIATION SYSTEM | PDC | | | S | | | | | |
| | 002 | MATERIALS | | | | F | U S | 8 Feb 93 | 25 Feb 93 | | |
| | | (DETONATION CORD) | MECH | 10 6 | | A | | | | | |
| 2 1 | 7419 | BALANCE OF WIRE ROPE | PDC | | | S | | | | | Partial Shipment Made Air Charter (39mm) |
| | 002 | VARIOUS SIZES | | | | F | US | 28 Feb 93 | 21 Mar 93 | RAIL | Balance Scheduled to Ship from Russia by Rail on 2/28/93 |
| | 5026 | BN SG & NILAHAH MINES | MECH | 174 | 14 | A | RUSSIA | | | | Rail Problems Cited for Delivery Slippage |
| 2 2 | 7419 | TRAILING CABLE | SCA | | | S | | | | | Includes cabling for Installation of Instrumentation Components for Power Plant 3 |
| | 002 | 125 000 lb 13 Spools | | | | F | U S | | | AIR | Partial Shipment Made Air Charter Balance Shipped via Ocean |
| | 113 1 | BN & SG MINES | ELECT | | 315 5 | A | | 18 Dec 92 | 20 Dec 92 | | |
| 2 3 | 7419 | BALANCE OF CONVEYOR | PDC | | | S | | | | | |
| | 002 | BELTS VARIOUS WIDTHS | | | | F | RUSSIA | | | RAIL | Belting Shipped 12/26/92 from Russia Received Inspected and Complete |
| | 267 2 | BN SG & NILAHAH MINES | MECH | 269 | | A | | 26 Dec 92 | 7 Jan 93 | | |

| ITEM | SPEC No | DESCRIPTION USE LOCATION | RESP DISCPLN | EST COST ($1000) | | SOURCE COUNTRY | SHIP DATE | ON SITE DATE | SHIPING MODE | STATUS/COMMENTS |
|---|---|---|---|---|---|---|---|---|---|---|
| 2 4 | 7419 | COAL CRUSHER PARTS | PDC | | | S | | | | Supplier Failed to Provide Good Faith Bid Ministry Subsequently Arranged to |
| | 002 | | | 0 | | F | RUSSIA | | RAIL | Receive Parts via Trade Barter Arrangement |
| | 400 4 | SHARIN GOL MINE | MECH | | | A | | N/A | | Item deleted from list |
| 3 1 | 7419 | TRUCK ENGINE SPARE | PDC | | | S | | | | Best Delivery Date Quoted by Supplier |
| | 002 | PARTS | | | | F | RUSSIA | 26 Mar 93 | 16 Apr 93 | RAIL |
| | 5027 | BN&SG MINES | MECH | 219 6 | | A | | | | |
| 3 2 | 7419 | EXCAVATOR SPARE | PDC | | | S | | | | PARTS ON SITE via off Project Arrangements between Ministry and Supplier |
| | 002 | PARTS ESH 20/90 & 15/90 | | 0 | | F | RUSSIA | NA | | Item deleted from list |
| | 400 2 | BAGGA NUUR MINE | MECH | | | A | | | | |
| 3 3 | 7419 | EXCAVATOR SPARE PARTS | PDC | | | S | | | | Shipment Released with Corporate Guarantee 2/1/93 (Partial) |
| | 002 | ESH 10/70 13/50 & 6 5/45 | | | | F | RUSSIA | 1 Feb 93 | 26 Feb 93 | RAIL Balance to Ship 2/15/93 |
| | 400 8 | BN & SG MINES | MECH | 421 | | A | | | | |
| 3 4 | 7419 | LOCOMOTIVE REBUILDS | PDC | | | S | | | | Major Overhaul in Russia |
| | 002 | DIESEL ELECTRIC | | | | F | RUSSIA | N/A | 26 Feb 93 | RAIL |
| | 400 9 | SHARIN GOL MINE | MECH | 175 | | A | | | | |
| 3 5 | 7419 | EXPLOSIVES | DEH | | | S | | | | Vendor Has Slipped Shipping Date from Contracted Date |
| | 002 | | | | | F | RUSSIA | 12 Feb 93 | 5 Mar 93 | RAIL Due to Rail Problems |
| | 400 6 | BN & SG MINES | MECH | 570 | | A | | | | |
| 3-6 | 7419 | NEW EXCAVATOR & PARTS | PDC | | | S | | | | ESH 8I has been delivered via off project arrangements between Ministry & supplier |
| & | 002 | EKG 5A 10011 5112 | | 270 | | F | RUSSIA | | | RAIL EKG 5A purch as indicated and deliv to border 12/29/92 Models 10011 & 5112 to be ordered |
| 3-6A | 400 7 | SG & LOCAL MINES | MECH | 650 | | A | | 15 Dec 92 | 4 Jan 93 | Expect 2/20/93 Ship Date On Site 3/13/93 |
| 3 7A | 7419 | TIRES & TUBES | RMS | | | S | | | | Purchase Subject to Additional Funding and Negotiation of Terms & Conditions |
| | 002 | | | 135 | | F | RUSSIA | ITEM DELETED | | RAIL Item Deleted due to Lack of Funds & Letter of Credit Issue |
| | 5028 | MINE | MECH | | | A | | | | |
| 3 7B | 7419 | TIRES & TUBES | RMS | | | S | | | | Partial Shipment made Air Charter (174 Tires) |
| | 002 | | | | | F | U S | | | AIR Balance shipped via ocean (26 Tires) |
| | 5028 | MINE | MECH | | 150 | A | | 18 Dec 92 | 20 Dec 92 | |
| 3-8 | 7419 | VEHICLE BATTERIES | SCA | | | S | | | | Partial Shipment made Air Charter (200 182 AMP HR Batteries) |
| | 002 | | | | | F | U S | | | AIR Balance to ship via ocean (290 75 and 132 AMP HR Batteries) |
| | 137 1 | MINES | ELECT | | 49 | A | | 18 Dec 92 | 20 Dec 92 | |
| 3 9 | 7419 | EXCAVATOR MOTORS | PDC | | | S | | | | Entire Order to Ship at one time Shipment Slipped due to Rail Problems |
| | 002 | | | | | F | RUSSIA | 28 Feb 93 | 21 Mar 93 | RAIL P O Modified due to Vendor Manuf /Delivery Problems with Item 6 of 6 |
| | 128 1 | BN & SG MINES | MECH | 563 4 | | A | | | | |
| 3 10 | 7419 | DRILL RIG 1 EA | DEH | | | S | | | | |
| | 002 | DIESEL | | 0 | | F | US | | N/A | ITEM DELETED |
| | 400 5 | LOCAL MINES | MECH | | | A | | | | NOT INCLUDED W/ FORECAST OF EXPENDITURES |

| ITEM | SPEC No | DESCRIPTION USE LOCATION | RESP DISCPLN | EST COST ($1000) | | | SOURCE COUNTRY | SHIP DATE | ON SITE DATE | SHIPING MODE | STATUS/COMMENTS |
|---|---|---|---|---|---|---|---|---|---|---|---|
| 3 11 | 7419 | DRAG LINE BEARINGS | PDC | | | S | | | | | |
| | 002 | | | | | F | RUSSIA | 28 Feb 93 | 21 Mar 93 | RAIL | Vendor has slipped ship date due to railroad problems |
| | 400 3 | BAGGA NUUR MINE | MECH | 4 | | A | | | | | |
| | | | 75 % | 4025 8 | | | RUSSIA COAL SECTOR | | | | |
| | | | 25% | | 1357 9 | | U S COAL SECTOR | | | | |
| | | | | | 5383 7 | | TOTAL COAL SECTOR | | | | |

| ITEM | SPEC No | DESCRIPTION USE LOCATION | RESP DISCPLN | EST COST ($1000) | | | SOURCE COUNTRY | SHIP DATE | ON SITE DATE | SHIPING MODE | STATUS/COMMENTS |
|---|---|---|---|---|---|---|---|---|---|---|---|
| | | | | | | | | | | | |
| | | **POWER PLANT PROCUREMENTS** | | FOB | FOB | | | | | | |
| | | | | UB | Factory | | | | | | |
| 1 1 | 7419 | TRANSMITTERS FOR | WEC | | | S | | | | | Shipment Made Air Charter |
| | 001 | PC MILLS | | | | F | U S | | | AIR | |
| | 252 1 | PP 3 | I & C | | w/1 4 | A | | 18 Dec 92 | 20 Dec 92 | | |
| 1 2 | 7419 | RTD s | WEC | | | S | | | | | |
| | 001 | FOR PC MILS | | | | F | U S | 8 Feb 93 | 17 Feb 93 | AIR | Ship via Air |
| | 252 2 | PP 3 | I & C | | w/1 4 | A | | | | | |
| 1 3 A | 7419 | MISC AC MOTOR DRIVES | WEC | | | S | | | | | Partial Shipment |
| | 001 | FOR PC MILLS | | | | F | U S | 8 Feb 93 | 17 Feb 93 | AIR | via Commercial Air |
| | 252 3 | PP 3 | I & C | | 25 | A | | | | | From U S Balance from Germany Ship 2/8/93 |
| 1 3B | 7419 | MISC DC MOTOR DRIVES | | | | S | | | | | Ship via Commercial Air |
| | 001 | FOR PC MILLS | | | 20 | F | US | 8 Feb 93 | 17 Feb 93 | AIR | (Partial Order balance Later ) |
| | 252-8 | PP 3 | | | | A | | | | | |
| 1-4 | 7419 | CONTROLLERS FOR PC | WEC | | | S | | | | | Partial Shipment Made Air Charter |
| | 001 | MILLS | | | | F | U S | | | AIR | Balance to Ship via Commercial Air on 2/8/93 (Power Supplies) |
| | 252 4 | PP 3 | I & C | | 188 | A | | 18 Dec 92 | 20 Dec 92 | | On Site 2/15/93 |
| 1 5 | 7419 | FEEDER ALARMS FOR | WEC | | | S | | | | | Ship Via Commercial Air & Charter |
| | 001 | PC MILLS | | | | F | U S | 8 Feb 93 | 17 Feb 93 | AIR | |
| | 252 5 | PP 3 | I & C | | 43 | A | | | | | |
| 1-6 | 7419 | DAMPER DRIVES FOR | WEC | | | S | | | | | These Drive Units Made First Air Charter |
| | 001 | PC MILLS | | | | F | U S | | | AIR | |
| | 252-6 | PP 3 | I & C | | 64 | A | | 18 Dec 92 | 20 Dec 92 | | |
| 1 7 | 7419 | SCANNERS FOR PC | WEC | | | S | | | | | |
| | 001 | FIRING | | | | F | U S | 8 Feb 93 | 17 Feb 93 | AIR | Scanners & Special Cable Ship via Commercial Air & Charter |
| | 252 7 | PP 3 | I & C | | 129 | A | | | | | Cabinets and Fans will Ship Later |
| 1 8 | 7419 | PULVERIZER GEAR PARTS | PDC | | | S | | | | | Not Enough Funds for |
| | 001 | | | | | F | RUSSIAN | 31 Mar 93 | 21 Apr 93 | | 6 Pairs Requested Must Prioritize Reqts |
| | | | MECH | | 78 | A | | | | | 2 Pairs Purchased |
| 1 9 | 7419 | ROLLER CRUSHERS | PDC | | | S | | | | | P O Not Executed Due to Long Lead Time (6 Months) |
| | 001 | FOR NO 4 P O | | 170 | -- | F | RUSSIAN | ITEM DELETED | | | |
| | | | MECH | | | A | | | | | |
| 1 10 | 7419 | ID FAN IMPELLERS | PDC | | | S | | | | | Estimated Best Del Date |
| | 001 | (WHEELS) FOR NO 4 P P | | | | F | RUSSIAN | 15 Jun 93 | 6 Jul 93 | | |
| | | | MECH | | 34 | A | | | | | |

| ITEM | SPEC No | DESCRIPTION USE LOCATION | RESP DISCPLN | EST COST ($1000) | | | SOURCE COUNTRY | SHIP DATE | ON SITE DATE | SHIPING MODE | STATUS/COMMENTS |
|---|---|---|---|---|---|---|---|---|---|---|---|
| 1 11 | 7419 | PULVERIZER DRIVE | PDC | | | S | | | | | Estimated Best Del Date |
| | 001 | PINION BEARINGS FOR | | | | F | RUSSIAN | 5 Mar 93 | 26 Mar 93 | | |
| | | NO 4 P O | MECH | | 10 6 | A | | | | | |
| 2 1A | 7419 | BOILER TUBING | RMS | | | S | | | | | |
| | 001 | | | | | F | U S | | | AIR | Part of Shipment Made Air Charter |
| | 211 1 | PP 4 3 2 D & E 73 M TONS | MECH | | 147 | A | | 18 Dec 92 | 20 Dec 92 | | Balance of Shipment will Ship via Ocean |
| 2 1B | 7419 | BOILER TUBING | RMS | | | S | | | | | Vendor Slipped Shipment from Scheduled 12/20/92 Date |
| | 001 | | | | | F | RUSSIAN | | 15 Feb 93 | RAIL | First Shipment Made 1/26/93 |
| | 211 1 | PP 4 3 2 D & E 914 TONS | MECH | 964 | | A | | 26 Jan 93 | | | |
| 2 2 | 7419 | BEARINGS 40 TYPES | RMS | | | S | | | | | Shipment Delayed due to Rail Problems |
| | 001 | | | | | F | RUSSIAN | 26 Jan 93 | 26 Feb 93 | RAIL | |
| | 259 3 | PP 3 | MECH | 62 | | A | | | | | |
| 2 3 | 7419 | BEARINGS | RMS | | | S | | | | | |
| | 001 | COMBINED WITH 2 2 ABOVE | | INCL. | | F | RUSSIAN | | | | |
| | 259 3 | | MECH | W/ 2 2 | | A | | | | | |
| 2 4 | 7419 | AC MOTORS 3 EA | RMS | | | S | | | | | No longer made Substitutes for this heating season unlikely |
| | 001 | COMBINED WITH 2 13 BELOW | | INCL. | INCL | F | RUSSIAN | | | | |
| | 128 1 | | MECH | W/ 2 13 | | A | | | | | |
| 2 5 | 7419 | AC MOTOR 1 EA | RMS | | | S | | | | | No longer made Substitutes for this heating season unlikely |
| | 001 | COMBINED WITH 2 13 BELOW | | INCL. | INCL | F | RUSSIAN | | | | |
| | 128 1 | PP 3 | MECH | W/ 2 13 | | A | | | | | |
| 2-6 | 7419 | CONVEYOR BELTING | | | | S | | | | | Shipment Made on 12/26/92 Received Inspected and Complete |
| | 001 | PARTS & MATERIAL | | | | F | RUSSIAN | | | RAIL | |
| | 267 1 | D PP | | 281 | | A | | 26 Dec 92 | 7 Jan 93 | | |
| 2 7A | 7419 | NA3PO4 | RMS | | | S | | | | | RECEIVED QUOTE P O PLACED |
| | 001 | 60 Tons | | | | F | RUSSIAN | 30 Mar 93 | 16 Apr 93 | RAIL | |
| | 213 1 | PP 4 3 2 D E & C | MECH | 9 8 | | A | | | | | |
| 2 7B | 7419 | NAOH | RMS | | | S | | | | | RECEIVED QUOTE P O PLACED |
| | 001 | 60 Tons | | | | F | RUSSIAN | 30 Mar 93 | 16 Apr 93 | RAIL | |
| | 213 2 | PP 4 3 2 D E & C | MECH | 30 9 | | A | | | | | |
| 2 7C | 7419 | CAC2 | RMS | | | S | | | | | Item Deleted |
| | 001 | | | 0 | | F | RUSSIAN | | | RAIL | |
| | 213 3 | PP 4 3 2 D E & C | MECH | | | A | | | | | |
| 2 7D | 7419 | ACTIVATED COAL | RMS | | | S | | | | | RECEIVED QUOTE P O PLACED |
| | 001 | 50 Tons | | | | F | RUSSIAN | 30 Mar 93 | 16 Apr 93 | RAIL | |
| | 213 4 | PP 4 3 2 D E & C | MECH | 65 | | A | | | | | |

| ITEM | SPEC No | DESCRIPTION USE LOCATION | RESP DISCPLN | EST COST ($1000) | | | SOURCE COUNTRY | SHIP DATE | ON SITE DATE | SHIPING MODE | STATUS/COMMENTS |
|---|---|---|---|---|---|---|---|---|---|---|---|
| 2 7E | 7419 | CATONITE | RMS | | | S | | | | | P O PLACED |
| | 001 | 40 Tons | | | | F | RUSSIAN | 30 Mar 93 | 16 Apr 93 | RAIL | |
| | 213 5 | PP 4 3 2 D E & C | MECH | 95 2 | | A | | | | | |
| 2 7F | 7419 | NH3 | RMS | | | S | | | | | RECEIVED QUOTE P O NOT PLACED |
| | 001 | TREATING BED MEDIA | | 0 | | F | RUSSIAN | | | RAIL | |
| | 213-6 | PP 4 3 2 D E & C | MECH | | | A | | | | | |
| 2 8 | 7419 | DISTRICT HEAT | RMS | | | S | | | | | Item Deleted from Priority List |
| | 001 | EXCHANGERS 2 EA | | 84 | | F | RUSSIAN | ITEM DELETED | | RAIL | |
| | 233 1 | D PP | MECH | | | A | | | | | |
| 2 9 | 7419 | STRIP CHART | RMS | | | S | | | | | Made First Air Charter |
| | 001 | RECORDING PAPER | | | | F | U S | | | AIR | |
| | 5005 | PP 4 3 & D | MECH | | 80 | A | | 18 Dec 92 | 20 Dec 92 | | |
| 2 10 | 7419 | BABBITTT INGOTS FOR | RMS | | | S | | | | | |
| | 001 | PLAIN BEARINGS | | | | F | U S | | | | Arrived in UB 12/14/92 |
| | 19 1 | PP 4 & 3 | MECH | | 14 | A | | | 29 Dec 92 | | Delivered 12/29/92 |
| 2 11 | 7419 | MOTOR OPERATED | RMS | | | S | | | | | Item Deleted from Priority List |
| | 001 | REDUCING GEAR 25 EA | | 38 | | F | RUSSIAN | ITEM DELETED | | RAIL | |
| | | PP 3 | MECH | | | A | | | | | |
| 2 12 | 7419 | MOTOR OPERATED | RMS | | | S | | | | | Item Deleted |
| | 001 | REDUCING GEAR 10 EA | | 8 | | F | RUSSIAN | | | RAIL | |
| | | PP 3 | MECH | | | A | | | | | |
| 2 13 | 7419 | AC MOTORS 4 EA | RMS | | | S | | | | | No Longer Made Substitutes for this heating season unlikely |
| | 001 | | | 0 | | F | RUSSIAN | | N/A | RAIL | NOT INCLUDED W/ FORECAST OF EXPENDITURES |
| | 128 1 | PP 4 & D | MECH | | | A | | | | | |
| 2 14 | 7419 | 100 KW DIESEL GENER | SCA | | | S | | | | | Purchase is highly unlikely due to delivery problems |
| | 001 | SETS 50 EA | | | 0 | F | U S | | N/A | OCEAN | NOT INCLUDED W/ FORECAST OF EXPENDITURES |
| | | LOCAL/REMOTE LOCALS | ELECT | | | A | | | | | |
| | | | 68% | 1807 9 | | | RUSSIA POWER SECTOR | | | | |
| | | | 32% | | 832 6 | | U S POWER SECTOR | | | | |
| | | | | | 2640 5 | | TOTAL POWER SECTOR | | | | |

32

| ITEM | SPEC No | DESCRIPTION USE LOCATION | RESP DISCPLN | EST COST ($1000) | | | SOURCE COUNTRY | SHIP DATE | ON SITE DATE | SHIPING MODE | STATUS/COMMENTS |
|---|---|---|---|---|---|---|---|---|---|---|---|
| | | **GENERAL PROCUREMENTS** | | FOB Factor | FOB Factory | | | | | | |
| G 1 | | FREIGHT FORWARDING | RHK | | | S | | | | | |
| | | COMPANY | | | 1050 | F | U S | | | | |
| | | | | | | A | | | NA | NA | |
| G 2 | | RUSSIAN PROCUREMENT | RHK | | | S | | | | | |
| | | REP / AGENT | | 0 | | F | RUSSIAN | | NA | NA | Item Deleted |
| | | ENERGOMONTAGE | | | | A | | | | | |
| G 3 | 7419 | SATELLITE COMMO DISH | REM | | | S | | | | | |
| | 001 | | | | | F | U S | | | | Arrived in UB 12/14/92 |
| | 5015 | FOR IN COUNTRY OFFICE | MECH | | 27 | A | | | 29 Dec 92 | | Delivered 12/29/92 |
| G 4 | 7419 | COMPUTER HDW & SFW | REM | | | S | | | | | |
| | 001 | | | | | F | U S | | | | Arrived in UB 12/14/92 |
| | 5017 | FOR IN-COUNTRY OFFICE | MECH | | 9 | A | | | 29 Dec 92 | | Delivered 12/29/92 |
| G 5 | 7419 | FAX MACHINE | REM | | | S | | | | | |
| | 001 | | | | | F | RUSSIAN | | | | In UB |
| | 5025 | FOR IN COUNTRY OFFICE | MECH | 1 | | A | | | 9 Nov 92 | | |
| G-6 | 7419 | PHOTOCOPIER | REM | | | S | | | | | |
| | 001 | | | | | F | RUSSIAN | | | | In UB |
| | 5024 | FOR IN-COUNTRY OFFICE | MECH | 5 | | A | | | 9 Nov 92 | | |
| G 7 | 7419 | STANDBY DIESEL GEN | REM | | | S | | | | | |
| | 001 | SET 5 KW | | | | F | U S | | | | Arrived in UB 12/14/92 |
| | 5019 | FOR IN-COUNTRY OFFICE | MECH | | 1 | A | | | 29 Dec 92 | | Delivered 12/29/92 |
| G 8 | 7419 | TEST EQUIPMENT | WEC | | | S | | | | | |
| | 001 | FOR STARTUP CREW | | | | F | U S | | | | Arrived in UB 12/14/92 |
| | 5022 | | I & C | | 3 | A | | | 29 Dec 92 | | Delivered 12/29/92 |
| G 9 | 7419 | 2 WAY RADIOS | REM | | | S | | | | | |
| | 001 | | | | | F | U S | | | | Arrived in UB 12/14/92 |
| | 5021 | | MECH | | 2 | A | | | 29 Dec 92 | | Delivered 12/29/92 |
| G 10 | 7419 | M K TECHNICAL | DEH | | | S | | | | | Includes 144 851 Allowance for Continuing Services & Blast Training |
| | 001 | ASSISTANCE FOR | | | 234 8 | F | U S | | | NA | |
| | | COAL MINES | MECH | | | A | | | 5 Nov 92 | | |
| | | | 0 % | 6 | | | RUSSIAN GENERAL | | | | |
| | | | 100% | | 1326 8 | | U S GENERAL | | | | |
| | | | | | 1332 8 | | TOTAL GENERAL | | | | |
| | | | 62 % | 5839 7 | | | RUSSIA TOTAL PROJECT | | | | |
| | | | 38% | | 3517 3 | | U S TOTAL PROJECT | | | | |
| | | | | | 9357 | | TOTAL PROJECT | | | | |

APPENDIX B

I&C TRIP REPORT

JULY 1992

## APPENDIX B

## I&C TRIP REPORT-JULY 1992

### Pulverizer Operation

The coal pulverizers are the ball mill type, which is a low speed and high capacity machine

Plant personnel run the pulverizer and feeder at full speed until the pulverized coal (PC) bunker is full The operating instructions require three meters of coal in the pulverized coal bunker in order to fire coal Total depth of the pulverized coal in the bunker is nine meters Plant personnel manually check the bunker level every hour when the unit is in operation Bunker level checking is accomplished utilizing a fixed pulley and weight measuring system in each PC bunker (the weight is lowered to the top of the pulverized coal bed within the coal bunker) The rope is marked to indicate level

The high pressure boilers each have two pulverizers and may be operated with a single pulverizer This would mean that three (3) burners are in operation, and that two (2) burners on one wall and one burner on the other wall would be in service

It should be noted that the operation of the ball mills (pulverizers) are identical for the high pressure boilers at the Ulaanbaatar and Darkhan power plants

A difference was noted in the control philosophy of the low pressure boiler pulverizer operation at Power Plant No 3 in Ulaanbaatar The damper which controls air flow to each pulverizer is a manual damper The high pressure boilers and all the Darkhan boilers have motor driven dampers

The dampers on the high pressure boilers at Power Plant No 3 and all boilers at Darkhan are designed to be automatically controlled They maintain mill outlet pressure with a motor driven air flow control damper These pulverizers also have a hot air damper and a tempering air control damper Therefore, each pulverizer has three motor operated control dampers

It should be noted that pulverizers in the United States typically have pneumatic drives and not electrical drives All Mongolian power plants DO NOT have a compressed air system available If a control system is not properly tuned, it will cause the damper drives to hunt (cycle) This results in continuous motor operation and in time failure of the motor A pneumatic system would be more forgiving and able to maintain continuous cycling

### Difference in Design of the Low Pressure Boilers

The low pressure boilers utilize the tempering air damper to control mill pressure while the hot air damper controls mill outlet temperature The air flow control damper is manual This has a direct impact on the control of pulverizer outlet temperature and pressure It is known that automatic control has not been accomplished for many years on these low pressure boilers



35

It should be noted that the pulverizers on low pressure boilers in the United States would have a damper operation arrangement similar to the high pressure boilers, i e, three damper operators When an attempt is made to use the tempering air damper to control flow, flexibility is relinquished along with good pressure and temperature control The operator is forced to pick either temperature or pressure control and place the system in manual The air flow control damper is located in the common air line after the hot and tempering air ducts discharge the air into this duct

**Pulverizer Temperature**

The pulverizer temperatures should be as follows (per design conditions on Sharingol coal) Note that these boilers burn Bagga Nuur coal which is higher in ash and moisture content and lower in heating valve than Sharingol coal

Tempering air at 214 °C 62 6%*

Hot air at 336 °C 37 4%*

Pulverizer inlet temperature 320 °C

Pulverizer outlet temperature 60 °C

*Percent of the total air flow through the pulverizer

The actual hot air temperature is approximately 318 °C, it should be around 362 °C The air temperature at the pulverizer inlet is 310 °C The pulverizer outlet thermocouple is wired directly to the controller Temperature transmitters are not required Plant personnel would like RTDs in place of the thermocouples and UE&C concurs with this

**Pulverizer Pressure**

The pulverizer outlet pressure should be -30 mm of water column The pressure occasionally reached -80 mm and has gone beyond the range of the meter

**Pulverizer Air/Fuel Ratio**

The existing control system can not compensate feeder speed for the different types of coal being fired (BTU correction & moisture)

The coal feeders to the pulverizer had AC motors which have been changed to DC drives

**Pulverizer By-Pass**

The Pulverizer outlet high temperature switch automatically closes the hot air damper when the temperature is high However, it does not reopen it This high temperature switch also opens the cold air damper and opens the pulverizer by pass dampers



36

The pulverizer air dampers, located between the pulverizer and fan, will close when the pulverizer is out of service The pulverizer by pass dampers are ducted into the system after a shutoff damper located before the pulverizer fan

During normal operation the controls are in manual with signals used as indicators only The hot air damper is full open and the tempering air damper is open about 5 to 10%

The pulverized coal bunker feeders can be controlled remotely The speed of the feeders can be controlled from the control board by the operator, i e, not automatically

The operators stated that the damper drives will work with a remote control signal if new motors can be furnished The gearing and motor controls do function and do not need replacement The pulverizer coal bunker outlet valve (feeder) motors are in poor condition and need to be replaced These feeders should be included on a future list because of the amount of work and cost involved

The speed of individual pulverized coal feeders to the burners cannot be independently changed, i e all feeders on a pulverizer will change speed at the same time A common DC generator provides the DC current for all three feeder motors on each pulverizer The speed control for the DC feeders is functional but new DC motors are required

**Coal Flow**

The operator cannot monitor coal flow to or from the pulverizer If the raw coal does hang up in the bunker, the pulverizer will start to deplete its coal supply

The operators have discovered that by lowering the pulverizer outlet temperature to 45 to 50 °C, the pulverizer explosions decrease However, coal transport becomes a major problem and hang ups in the pulverized coal bunker are frequent When the pulverizer outlet temperature is less than 45 °C, the coal in the pulverized coal bunker is too moist This leads to plugging problems in the pulverized coal bunker and subsequent loss of coal to the burners

During the shut down of the pulverizers, they do have explosions During the years of 1988 and 1989 coal explosions occurred almost every day Last year, the number of explosions was reduced to forty-two Explosions now occur approximately once a month When new control systems become operational, frequent explosions should become a thing of the past

UE&C has had numerous discussions and informal training sessions with plant operating and maintenance personnel regarding explosions and proper pulverizing system operation and control

The operator will try to increase the vacuum within the pulverizer after feeder shut down Pulverizer outlet temperature has dropped as low as 38 °C with VERY poor burner operation The operators would like to know if it is possible to dry the coal before it enters the pulverizer This is possible with changes to the coal handling system, but would be expensive for this project

The operators stop the pulverizer each day to examine it for build up of coal pockets If build up is found, it requires cleaning of the coal in this area It requires three days of pulverizer down time, if cleaning is required

The burner air dampers DO NOT work because the motors need replacement New motors are required but the gears and motor controls are in working condition

**Pulverized Dampers**

The dampers are in poor condition

The damper drives will operate in manual and do not have to be replaced However, new motors will be required in order to operate these dampers in remote manual operation

The control signal to drive units and from transmitters will be 0 - 10 V DC pulse signals

**Pulverizer Design**

The boiler design requires the air temperature to be 336 °C after the air heater

The Russian design requires 320 °C hot air temperature to the pulverizer inlet

However a normal temperature of only 280 °C is currently available to the pulverizer The operators have the system in manual to maintain a higher pulverizer inlet temperature At times they are able to get the inlet temperatures up to 300 to 320 °C however, a temperature of 326 °C is required for wet coal

The boilers were designed for a coal with a moisture of 17% (Sharin Gol coal) However, currently the moisture is in the 25 to 35% range (Bagga Nuur coal)

The air/coal mix leaving the pulverizer is designed for 60 °C (140 °F), but is currently 40 °C (104 °F), with 36 °C (97 °F) being on the low end

NOTE! A coal fired plant in the United States would have a pulverizer outlet temperature of approximately 82 °C (180 °F) This means lower combustion efficiency for the Mongolian boilers

An EPRI (Electric Power Research Institute) Report CS-1883-1, dated February 1987, titled **"PREVENTION, DETECTION AND CONTROL OF COAL PULVERIZER FIRES AND EXPLOSIONS"** indicates that the average overall rate of explosions for a coal fired plant is three explosions in ten years The term explosions includes severe puffs, as well as explosions This data was based on 361 individual coal fired generating plans out of the 1,333 in the United States in 1980

The report indicates that three explosions per year were found in only a few extreme cases To date, the best that No 3 Power Plant has been able to do with current controls is 12 or more per year

**Purge**

The operating manuals require a fifteen minute purge of the boiler before a unit can light off on any fuel However, the operators may start a boiler as they wish and purge for as long as they wish No safety interlock is in place to prevent this,

The Russians did provide a safety system for the boilers However, time has taken a toll on the system, thus today it is without value

**Type of Coal**

The number of hours of pulverizer operation to provide a full twenty four hours of coal for boiler operation will differ with the type of coal The coal feeders are normally run at one speed

Sharingol Coal requires 16 hours of pulverizer operation for a 24 hour period of boiler operation

Bagga Nuur coal requires 4 hours of pulverizer operation for a 24 hour period of boiler operation

Shivee-Ovoo Coal requires 24 hours of pulverizer operation for a 24 hour period of boiler operation This was based on only three days of operation This is a new coal mine in Mongolia

No comment was made on the Nilakah coal

**Safety**

There was a concern raised during a meeting with operating personnel that the high pressure boilers and the building would not pass local inspection The boiler and building inspectors were at the site during the annual shutdown which occurred during July

The Chief Engineer indicated that this should not be of concern and did not believe the inspectors would shut down the high pressure plant The power plant personnel are unable to locate a large crane to repair the roof(which has panels which are failing in places) The Russians did have a crane at the plant of the required capacity, however, it has been returned to Russia The crane would have to be rented from Russia which requires hard currency

**Motors**

Two pulverizer motors are needed in the high pressure plant The drawing showed both motors would have clockwise rotation However these motors did not appear on the final emergency spare parts list

**Oxygen Monitor**

BOILER FLUE GAS OUTLET 02 - The plant is unable to continuously measure the boiler $0_2$ in the flue gas outlet duct The excess air should be 16% per boiler design data It is currently estimated to be about 12%

**Boiler Notes**

Boilers 1 through 6 are low pressure boilers, while units 7 through 13 are high pressure

Boiler 5 - The low pressure boiler requires furnace tubing replacement The operators believe the pulverizer system can be kept in operation for one year The coal piping from the pulverizer and burner coal piping is now 3 to 4 mm in thickness and should be 6 mm It would take about two

months to replace this piping The operators believe the current piping will last through the winter season

Boiler 6 is direct fired from the pulverizer through the primary air fan to the burner A problem on this boiler is that the PA fan is in very poor condition and requires service Boilers 5 and 6 are set up for direct start-up on coal without oil ignitors This requires an additional burner located on the boiler side wall It was stated that this was not the normal start-up sequence but only an experiment

The operators connected the pulverizer outlet piping direct to the burners without classifiers to remove any heavy particles This pulverizer (like all the other pulverizers) is under negative pressure The pulverizer fan is located between the pulverizer and the burner The pulverizer coal bunker is no longer used It was not a surprise to learn that this pulverizer air fan had problems Fan parts are wearing out very quickly

NOTE! Most U S manufacturers normally pressurize ball mills to keep the fans out of the coal/air stream The ABB - Combustion Engineering (CE) medium vertical spindle type pulverizer normally has the fan in the air/coal stream The CE fan is designed to handle these very abrasive conditions However, the CE pulverizers have internal classifiers built into the pulverizer

Boiler 7 - A problem was found with pulverizer 7B inlet, which caused sparks and coal pockets build up coal resulting in a large number of explosions No explosions have occurred during 1992 on this pulverizer since changes to the housing were made to eliminate the coal pockets Pulverizer (7A) had eleven explosions in 1991

Boiler 9 - This boiler is out of service because insulation material and weld rod to complete repairs are not available

Boiler 10 - This unit is in continuous operation without required routine maintenance The operators are concerned that this unit will fail because of the lack of routine maintenance

Boiler 12 - This boiler has the same type of problem as 13, however the inspector has not shut this unit down at this time According to the operators the pulverizers on boilers 12 and 13 are in good condition It takes about two months to replace the tubes on one boiler

Boiler 13 - This boiler has been out of service for two years, and cannot be placed in operation because the tube thickness in only 2 mm and it should be 6 5 mm The boiler inspector found this to be true in the boiler back pass and in the furnace section

The operators feel that if the tube problem on boiler 13 could be corrected, it could be a very reliable unit because all other systems are in good condition

**Boiler Ranking Best to Worst**

Low Pressure Boilers 1, 2, 3, 4, 6, 5

High Pressure Boilers 10, 7, 9, 11, 8

High pressure boilers 9 and 11 will be 1 and 2 in availability after the capital improvements

Capital improvements were underway on boilers 9 and 11 Boiler 9 was scheduled to be completed by September 1 and boiler 11 to be completed by August 1

Boiler 8 has a large number of holes in the furnace casing which will not permit the boiler to be operated under negative pressure

During the months of December, January, and February four high pressure and five low pressure boilers are required to be in operation to meet heating demand

Two high pressure boilers (Units 12 and 13) and two low pressure (Units 5 and 6) were not operational at the time of the trip/visits reported herein

**High Pressure Boilers - Control Rooms**

The control room located nearest the low pressure building has the controls for boilers 7, 8 and 9 and turbines 5 and 6 The second control room has the controls for boilers 10, 11, 12 and 13 and turbines 7 and 8

**Darkhan Spare Parts**

No boilers are out of service due to explosions Boilers 1, 3, 5, 6, 8, and 9 are primary with boilers number 4 and 7 as secondary units Boilers 2, 4, 6 and 9 are under capital repair this summer (1992) Boiler 2 is now complete (July 28) and all other units will be available by October

Boilers 7 and 9 cannot be on line at the same time because of a shortage of a forced draft fan motor Boiler 8 also needs a new forced draft fan motor

**Technical Terms (Nomenclature)**

The following is a list of pulverizer terms

Ball Mill (Pulverizer) - This type of pulverizer reduces the coal to a very fine powder This is accomplished in a large drum turning at a very low speed (about 17 to 20 RPM) with small balls (40 mm) doing the crushing The balls will mix with and cause the coal to become pulverized Balls can be added during mill operation The balls do wear and become less effective These balls normally are continuously used until completely worn Riley Stoker Corporation and Foster Wheeler Energy Corporation (in the United States) manufacture pulverizers of this type

Cold Air Damper - An open/close (O/C) damper will open when the pulverizer is out of service The damper permits ambient air to enter the mill and is located downstream of the hot and tempering air dampers, which close when the pulverizer is out of service

Hot Air Control Damper - A modulating damper located in the high temperature air duct to the pulverizer The air temperature in this case should be about 336 °C (620 °F), and about 62 6% of the air flow should go through this duct



41

Hot Air O/C Damper - A set of dampers which permit high temperature air to bypass the pulverizer when out of service and go directly to the pulverizer air fan The air temperature in this case should be about 336 °C (620 °F) The two dampers open and a seal damper closes when the pulverizer is out of service

Manual Damper - A damper which has to be opened or closed by a handwheel and cannot be controlled directly by the boiler operator

Mod Damper - A damper which will modulate based on a control signal in order to maintain a given downstream temperature or pressure

Mill - Refer to the ball mill (or pulverizer)

O/C Damper - A damper which will automatically open or close due to control logic or by the action of the operator

Pulverizer - Refer to ball mill which is a type of pulverizer to grind the coal to a very fine powder

Pulverizer Air Fan - Located between the pulverized coal bunker and the burners This fan creates a suction pressure to transport coal from the pulverizer and pulverized coal bunker It then supplies positive pressure to transport the coal from the pulverized coal bunker to the burners

Pulverizer Air Damper before the Fan - is either opened or closed and is controlled from a switch on the control board

Pulverizer By-Pass Dampers - These o/c dampers by pass the hot and tempering air around the pulverizer to the inlet of the pulverizer air fan

Pulverizer Coal Feeders - located below the pulverized coal bunker Controls coal feed to the burners

Seal Valves - Two seal valves mounted in series are located at the top of the pulverized coal bunker These valves alternate (one closed and one open) position to permit the pulverized coal to enter the pulverized coal bunker These valves are not automatic They operate by weighted dampers counter weighing the weight of the coal

Tempering Air Control Damper - A modulating damper located in the low temperature air duct to the pulverizer The air temperature in this case should be about 214 °C (410 °F) About 37 4% of the air flow comes through this duct

Tempering Air O/C Damper - A set of open/closed dampers located in the low temperature air duct to the pulverizer air fan to by pass the pulverizer The air temperature in this case uses about 214 °C (410 °F) The two dampers open and a seal damper closes when the pulverizer is out of service

**Reference Data Problem**

All catalog information, blank data sheets, contract documents and records taken from Boston to Mongolia which were to be utilized during these on-site studies were lost by the airlines in shipment



42

This resulted in a less effective survey trip/visit and is only one example of the many difficulties in doing a project in Mongolia

**Project Goals**

- New transmitters to replace the current units
- Replacement motors for the damper drives
- Provide loss of coal flow alarm for raw coal feeders
- New RTDs for pulverizer outlet temperature
- New RTDs and meter to monitor transport air temperature
- New controllers for pulverizer temperature and pressure
- New damper operators for the mill flow control dampers on low pressure boilers
- New scanners and cooling air fans

The above project goals are to be accomplished in accordance with the available funds for the project

APPENDIX C

PROJECT MEMORANDA

FURNACE EXPLOSIONS

THE MONGOLIAN EXPERIENCE

APPENDIX C
(Excerpted from TDP Feasibility Study)

Project Memoranda

# FURNACE EXPLOSIONS

# THE MONGOLIAN EXPERIENCE

## UNITED STATES EXPERIENCE

On March 2, 1854, at the Fales and Gray Car Works, at Hartford, Connecticut, a one month old boiler, exploded with terrific force, completely destroying the boiler room and the adjoining blacksmith shop and badly shattering the main building Nine persons were killed outright, twelve died later and more than fifty others were seriously injured Like many other boiler explosions of that time, little was known about the reasons for the explosion [1]

This event did lead to the action of the Connecticut State Legislature to incorporate an agency to be called The Hartford Steam Boiler and Inspection Company, in the spring of 1866 Today, this firm is the leader in the inspection of pressure vessels for steam boilers [1]

On February 6, 1880, thirty mechanical engineers met in New York City, to form the American Society of Mechanical Engineers (ASME) This action was due to the public outcry related to the growing number of boiler explosions The ASME would have a significant influence in improving the safety of boiler design, through the ASME Boiler and Pressure Vessel Code [1]

On April 16, 1889, a group of boiler makers met in Pittsburgh, PA, to form the American Boiler Manufacturers Association (ABMA) The purpose of this new association was to create standards to "secure safety to the lives and property of all communities where boilers are used "[2]

The May 1889, issue of POWER MAGAZINE, reported the first meeting of the ABMA. By coincidence, the same issue carried a regular column headed "This Month's Accidents", because at this time boiler explosions were so common Reported in the May 1889 issue of Power were fourteen explosions, with 13 people killed and 14 injured [2]

A uniform specification for safety valves first appeared in the 1914 ASME Boiler Code [1]

The first fuel trip application occurred in 1919, on an oil pot burner The reason was to prevent the basement from becoming filled with oil if the fire went out [4] During this year, the Hartford Steam Boiler Inspection and Insurance Company, began insuring equipment against breakdown [1]

Purging of a furnace with air before any attempt to light off the fuel, dates back to the 1920's This was a prominent feature of loss experience prior to 1940 [4]



45

The action of these early organizations would lead to the improvement of boiler safety across the United States The creation of infra-red scanners in 1952 and ultraviolet flame scanners in 1957 to check on the status of burner flames, would offer a key alarm to the operator [2]

These developments led ABMA to work with the National Fire Protection Association (NFPA) to develop standards for prevention of boiler furnace explosions, a significant step forward in safety In 1958, reports of furnace explosions were once again increasing with alarming frequency The ABMA once again called for the need of a furnace protection standard [2]

In 1960, the NFPA created a new Committee for Boiler Furnace Explosions This action was taken at the request of the ABMA, ASME, Edison Electric Institute and others to improve boiler safety [2] The first meeting of the committee would be held at Riley Stoker Corporation in Worcester, Massachusetts, that year

The primary goal of the new NFPA committee would be to review data and the publication of furnace explosion standards It would have to be designed for laymen to control the combustion process It would offer a guideline for the basic operation of a boiler to prevent explosions

A paper by G W Kessler of Babcock & Wilcox, in 1961, reviewed the loss experience of the boiler industry There were an average of thirty one furnace explosions annually between 1956 to 1961 He pointed out that roughly nine of these furnace explosions per year were in utility boilers [4]

The first NFPA codes on boiler furnace explosions were adopted in 1964 The standards would be adopted in the following order

1964 Single burner oil and gas boilers
1964 Gas firing in multiple burner boilers
1966 Oil firing in multiple burner boilers
1968 Pulverized coal firing in multiple burner boilers
1973 Pulverizer Fuel Systems was transferred to this committee from the Committee on Dust Explosions Hazards The original standard was adopted in 1924
1976 NFPA would review the problem of high negative pressure excursions within the furnace settings The increased size of utility boiler-furnaces along with changes in technology to improve air quality introduced this problem in the late 1960's and 1970's The NFPA 85G standard was issued to prevent furnace implosions, in 1987
1988 Fluidized Bed Boilers
1989 Stoker Operation

The Electric Power Research Institute (EPRI) undertook a major report in the mid-1980's on the prevention of coal explosions in power plants [3]

A survey of some 361 power plants in the United States was performed to find out about the operation of pulverizer systems The information revealed that about 78% of the investigated plants reported low frequencies of fires and explosions About 22% of the coal fired units had major problems with fires or explosions



46

They also found a direct correlation between plant improvements in pulverizer maintenance programs and a reduction in fires or explosions Setting up a maintenance program was found to be an inexpensive method of reducing fires and explosions

They also found that direct fired systems have about one half the frequency of explosions as bin storage or indirect fired systems

Previous EPRI studies showed that a pulverizer explosion occurs at a rate of about one per day The annual cost to United States Utilities exceeds one billion dollars per year

> EPRI (Electric Power Research Institute) Report CS-1883-1, of February 1987, states "the average overall rate of fires and explosions at coal fired units is approximately five fires in four years and three explosions in ten years To some extent explosion value is larger because here the term "explosions" includes severe puffs (structure deformation) as well as the more limited true explosions (containment breaching) [3]
>
> The EPRI report included a survey of fires and explosions in coal fired units If coal from different sources is blended, the average number of explosions increases dramatically

The study would show the dangers of pulverizer explosions, i e that pressures within the piping systems can reach 1200 PSIG, due to these explosions

**United States Summary**

Pulverizer explosions remain a major concern for coal fired power plants within the United States

The explosions will normally occur during start up or shut down of the pulverizer When the pulverizer is in normal operation the atmosphere is fuel rich However, during start up or shut down, the pulverizer has to go through a period when the fuel to air ratio is correct (explosive air/fuel mixture exists) and all that is required is a source of combustion (spark or flame) to cause an explosion

A high speed pulverizer (as opposed to a rotary ball mill) shows a very low frequency of explosions because the retention time is just a few seconds The grinding area is so small that the correct fuel to air ratio cannot occur

**General Information**

**MONGOLIAN EXPERIENCE**

The following information is based on Power Plant No 3 at Ulaanbaatar, where safety and boiler availability are key problems in the operation of this plant

The Darkhan plant also has similar problems but not as severe Only one type of coal is used at this plant The plant had one explosion in 1981, four or five in 1991 and two in January 1992



41

Ulaanbaatar Power Plant Number 3 was built with Russian Steam Generators and Turbines, a total of 13 steam generators and 8 turbines are located in this plant

Six low pressure boilers are rated at 165,000 PPH 555 PSIG
Seven high pressure boilers are rated at 400,000 PPH 1422 PSIG

The first six boilers were commissioned around 1968
The last seven high pressure boilers were commissioned in around 1976

Four high pressure turbines are rated 25 MW and four low pressure turbines are rated 12 MW

The Ulaanbaatar plant has a nameplate generating capacity of 148 MW of electricity A total of 1,100 people work at this plant

Coal is supplied from four different mines located within Mongolia The breakdown is as follows

| | |
|---|---|
| Sharangol | 500,000 M Tons |
| Bagga Nuur | 350 000 M Tons |
| Shivee-Ovoo | 150,000 M Tons |
| Nilakah | 100,000 M Tons |

**Electrical Output and Importance of Power Plant No 3**

The normal electrical load is 50 to 60 Megawatts The winter electrical load is 120 to 136 Megawatts of power The summer load is an average of about 70 megawatts

The heating requirements for the city are as important for the plant as the electrical needs Power Plant No 4 furnishes 60 to 65% of the heating and electrical needs of the city Power Plant No 3 provides 30 to 35% of the city's heating and electrical needs and the majority of local industry's steam needs Power Plant No 2 provides approximately 2 to 3% of the city's heating and electrical needs A coal bunker explosion at Power Plant No 4 in December of 1991, caused electrical blackouts across the country

**Availability**

Availability information received from Power Plant No 3 at Ulaanbaatar was reviewed with the following summary information

During the year 1991, the average boiler availability of all thirteen boilers was as follows

39% of the time in operation

21% available but not in service

34% forced and scheduled unit maintenance or repair mode



42

Unit Number 8 was out of service all year because of an explosion the previous year

Unit Number 9 was in service for only a few weeks in January and out of service the rest of the year This was also because of an explosion in January

Unit Number 7 had the highest number (11) of explosions during the year However, it was out of service only 25% of the entire year for repair

**Steam Generator and Related Systems**

The low pressure boilers have the control boards located just to the right of the burner front when facing the boiler on the main operating floor The controls are in very poor condition

It was noted on both high and low pressure units that drum level appeared on the chart recorder only In the US, 2 or 3 different sources of drum level indicators would be present per boiler

The forced draft (FD) fan inlet vane damper drives were found with the control signal wires disconnected The air flow control is on manual with the operator required to adjust the damper In the winter the air is from outside the plant This is to avoid freeze up of in-plant piping systems due to nonfunctioning plant heating and ventilation systems The unit it NOT purged before start up The design should ensure that the steam coil sizing will permit a -40C air inlet and a suitable outlet temperature to the boiler to protect the furnace This will permit a purge without the possibility of freezing the furnace tubing or causing tubing stress problems because of the rapid change in temperature They do have ducts to draw FD air from the upper regions of the boiler house in the roof area, however this is used only in the summer for ventilation purposes Portions of the outside walls of the plant now have ice formations on the indoors due to a lack of heating and ventilation systems They are very concerned that using air from within the plant during the winter will cause additional freeze ups

The power relief steam valves are operated in a manual mode and manually shut down after start up

The steam lines do not have drip pots to accumulate and automatically drain any condensate in the lines Manual drain valves are shut off after start up and reopened on shut down This has caused turbine failure because of entrained water entering the turbine with the steam

The boilers do not have glass over the observation ports to prevent the furnace flame from causing personnel injury during normal operation if a puff should occur A number of openings were also present around the burner which could cause injury The ignitors were removed and the openings were not plugged At least one furnace access door showed signs of a bright flame ring around the door Normal maintenance would be for fire brick and high temperature cement to protect the door during operation

**Pulverizers, Low Pressure Boilers**

The pulverizers for the low pressure boilers are ball mills The ball mills made in the United States would be furnished with sound proof housing This enclosure would contain a great deal of the coal dust evident in this plant The current mills have no such housings

The coal pipes do wear out very quickly and coal dust explosions do occur within the furnace, ball mills, classifiers, cyclones and coal bunkers

Balls for the ball mills are four centimeters in diameter, when new A sample ball from a mill out of service was three centimeters in diameter

All pulverizer controls are in manual This includes the mill outlet temperature loop They should maintain the outlet temperature in the range of 170 deg F If the outlet temperature was too high the system logic (if operating) would open the cooling air damper If it goes high-high it should open a valve to permit steam to enter the mill, assuming a mill fire When the question was asked how often are the instruments checked to ensure that this will happen, the answer was never The I&C labs are unable to check thermocouples

The pulverized coal system has about 16 explosion disks located on each fuel system per high pressure boiler The enclosed table of the twenty six worst explosions in 1991 shows how many of these disks were damaged due to explosions

The coal handling equipment has magnetic metal separators which we understand are operational

Feeders do not have seals, therefore a high leakage of coal dust occurs

Pulverizer mill liners are wearing fast with the new type of coal (Bagga Nuur) Pulverizer motors and gears are generally OK. The pulverizer inlet liners typically wear out in about two years

Gear reducers typically last about 30,000 hours

Pulverizer outlet piping should be 8 millimeters thick but is now 3 millimeters thick in many places

Classifiers have erosion problems

Mill outlet temperature is manually controlled

Pulverizer fan blades have erosion, especially on one unit which has been converted to direct firing without a corresponding upgrade in fan housing and wheel materials

The motor operated pulverizer coal outlet valves are not suitable for automatic control

**High Pressure Boilers**

The inlet to the pulverizer has many explosions during normal operation, in addition to those during start-up

Pulverizer metal liners are wearing out fast, current liners are three years old

Outlet of pulverizer and pulverized coal transport piping have very high wear rates (due to high ash Bagga Nuur coal) Classifiers down stream of the pulverizers also have excessive erosion

Primary air (PA) fan blades are in poor condition, wear requires maintenance every six months, length of time depends on the type of coal

Coal pipes are in poor condition but pulverizer coal flow control valves are okay

**Explosions**

This plant (Plant No 3) had a total of forty two explosions during the year of 1991, and eight explosions occurred in the month of January 1992 The explosions occurred mostly in the pulverizers and have caused burns to employees

No one has yet died in an explosion at this plant, however, people have been injured At Power Plant No 2, two people died in 1988

At Plant No 4 a boiler had an explosion in the pulverized coal bunker at the end of December 1991

This plant (Plant No 3) provided us with a list of the top twenty six explosions of last year (26 of the 42 total explosions) The breakdown is of interest and the enclosed charts also show the time of the year the explosions occurred

11 explosions in Mill 7A
6 explosions in Mill 10A
6 explosions in Mill 1
2 explosions in Mill 3
1 explosion in Mill 93*

* It should be noted that this one explosion caused this unit to be out of service from January 1991 until the present

**Boiler Control Systems**

Automation of the Control Systems - The only control loops on automatic are the feedwater and steam temperature controls All other systems are on manual The combustion control system never worked in automatic The plant has Russian electronic controls The plant has two central control rooms The central control rooms in the high pressure plant has boiler and turbine control logic cabinets and main control boards The operators would like to have the controls for the low pressure boilers located within a central area The low pressure boilers are now "controlled" from panels located near the burner fronts The low pressure turbines are controlled from local panels near the turbines

The operators would like to have all high and low pressure boiler and turbine controls in one location The plant does contain a large area near the low pressure turbine deck which is now used for storage This area could be used for a new control room

It should be noted that all air, fuel, furnace pressure and mill controls are always in manual on all boilers Each boiler has three drum level indicators However, the indicators do not work in many cases and typically there is only one source of down level indication

UE&C did find on occasion that no one was at the control board There is a need for an operator to walk the boiler down on a regular basis, as well as an operator to be stationed at the control board at all times

The transmitters are electronic with a 0 5 VDC input to the control system Many transmitters do not work As an example On one unit only one of three drum level transmitters was in operation The plant is unable to obtain spare parts from Russia US firms do manufacture transmitters with a 0-5 VDC signal UE&C received a booklet in Russian on these transmitters

Damper drives are also electronic and information was obtained on them The control valves used are also motor driven

The only use of air was in the laboratory which had one air compressor for generator cooling Air dryers do not exist and at this time no critical control loops require compressed air

BURNER MANAGEMENT SYSTEM - If the operator cannot see a flame in the furnace, the operator is supposed to cause a fuel trip which will also trip the FD Fan The ID Fan will not trip The operator may restart the FD Fan at any time Once the FD Fan is in operation, the fuel can be restarted

The high pressure boilers have six burners which are opposite firing in the side walls Two burners are on the upper deck and one central burner one elevation below The burners are located on the sides of the boiler when standing in front of the boiler looking at the boiler with the back pass directly behind it

The low pressure boilers have three burners located at the front of the boiler and all are on the same elevation

The pulverized coal is ignited by heavy oil (Mazut) ignitors The heavy oil system has steam coils built into the storage tanks to keep the oil warm The oil lines are steam traced This is the only source of fuel to start up the boiler The design has a warm up requirement before coal can be fired

The high pressure boilers have both the feedwater and steam temperature controls on automatic The low pressure boilers have only the feedwater system on automatic

The stacks do NOT have any stack emission monitoring systems The boiler controls do have $0_2$ monitors for the combustion control system,however, many of these probes do not work The few that work are used for indication only

Coal bunker level (Raw and pulverized) is measured using a cable and pulley system that has been installed in each bunker A weight is lowered to the top of the coal and the distance is measured

**Training**

Training is very poor They do not have a simulator to train the personnel They have six levels of training with a test required for each level of training to permit the operation of equipment



52

The plant does have a training program and they do have a number of scale models of the boiler, turbine equipment, etc to help understand the operation of the plant

Every new employee is required to undergo a training program before they enter the plant


[1] Cross, Wilbur, "THE CODE" An Authorized History of the ASME Boiler Vessel Code, American Society of Mechanical Engineers, New York, 1990

[2] Axtman, William, "THE AMERICAN BOILER INDUSTRY" A Century of Innovation, American Boiler Manufacturers Association Arlington, Virginia, 1988

[3] Electric Power Research Institute (EPRI), "PREVENTION, DETECTION AND CONTROL OF COAL PULVERIZER FIRES AND EXPLOSIONS" EPRI CS-5069, Project 1883-1, February 1987 EPRI, 3412 Hillview Avenue, Palo Alto, CA 94304

[4] Lundberg, Robert, "PURGE RATE AIR FLOW FUNDAMENTALS PURGE RATE HISTORY AND REQUIREMENTS" 1992

APPENDIX D

BOILER AVAILABILITY ANALYSIS

(EXCEPTED FROM TPD STUDY)

# BOILER AVAILABILITY

# CHARTS

# MONGOLIAN PEOPLES REPUBLIC

# ULAN BARTAR

# POWER PLANT No. 3

J O 6874 001


| Page No | Charts |
|---|---|
| 2 | Average Boiler Availability |
| 3 | Operating & Maintenance |
| 4 | Boiler Reserve |
| 5 | Maintenance Shutdowns |
| 6 | Boiler Startups |
| 7 | Explosions per Pulverizer |
| 8 | Explosions per Month |
| 9 | |

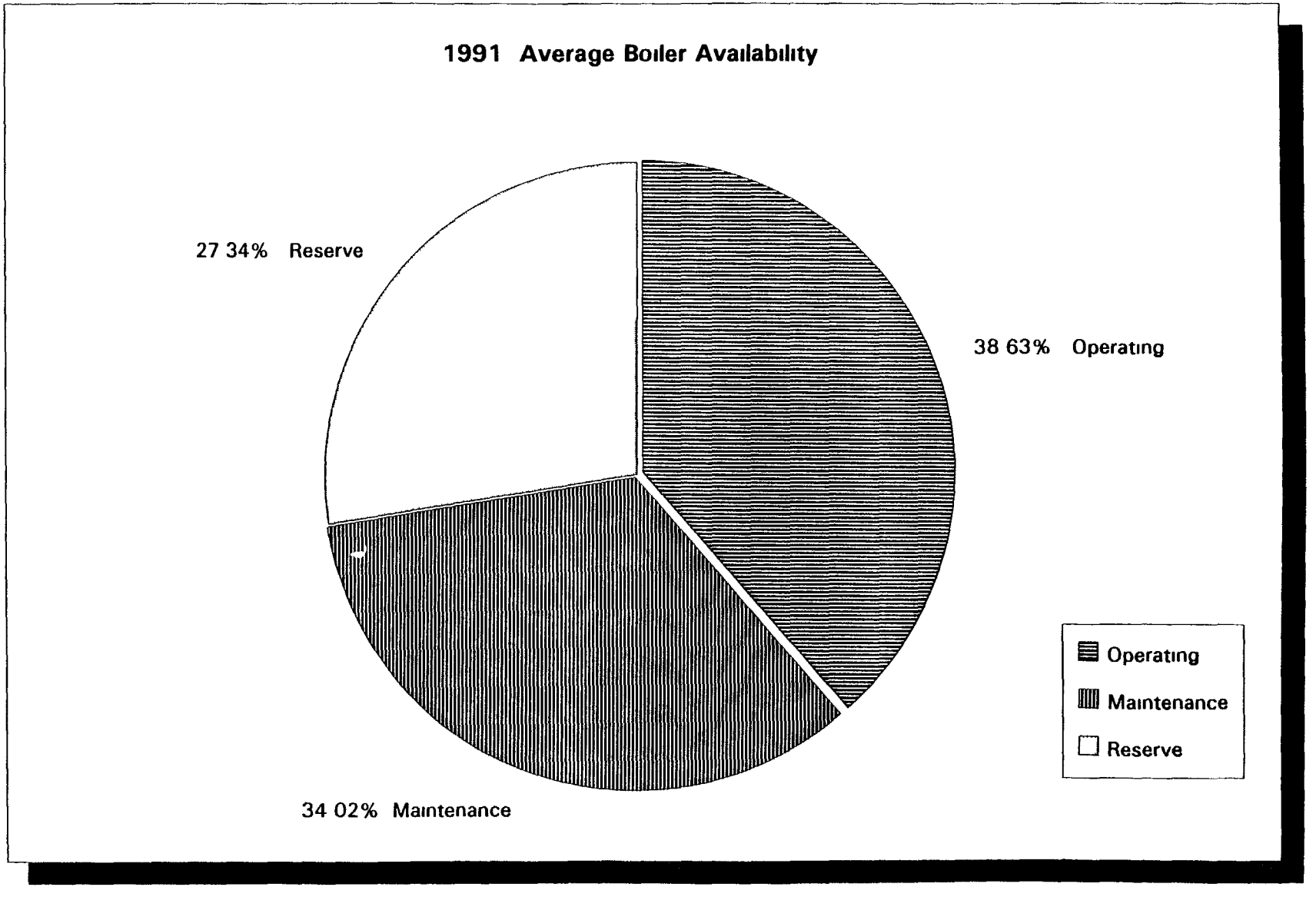
1991 Average Boiler Availability
27 34% Reserve
38 63% Operating
34 02% Maintenance
Operating
Maintenance
Reserve

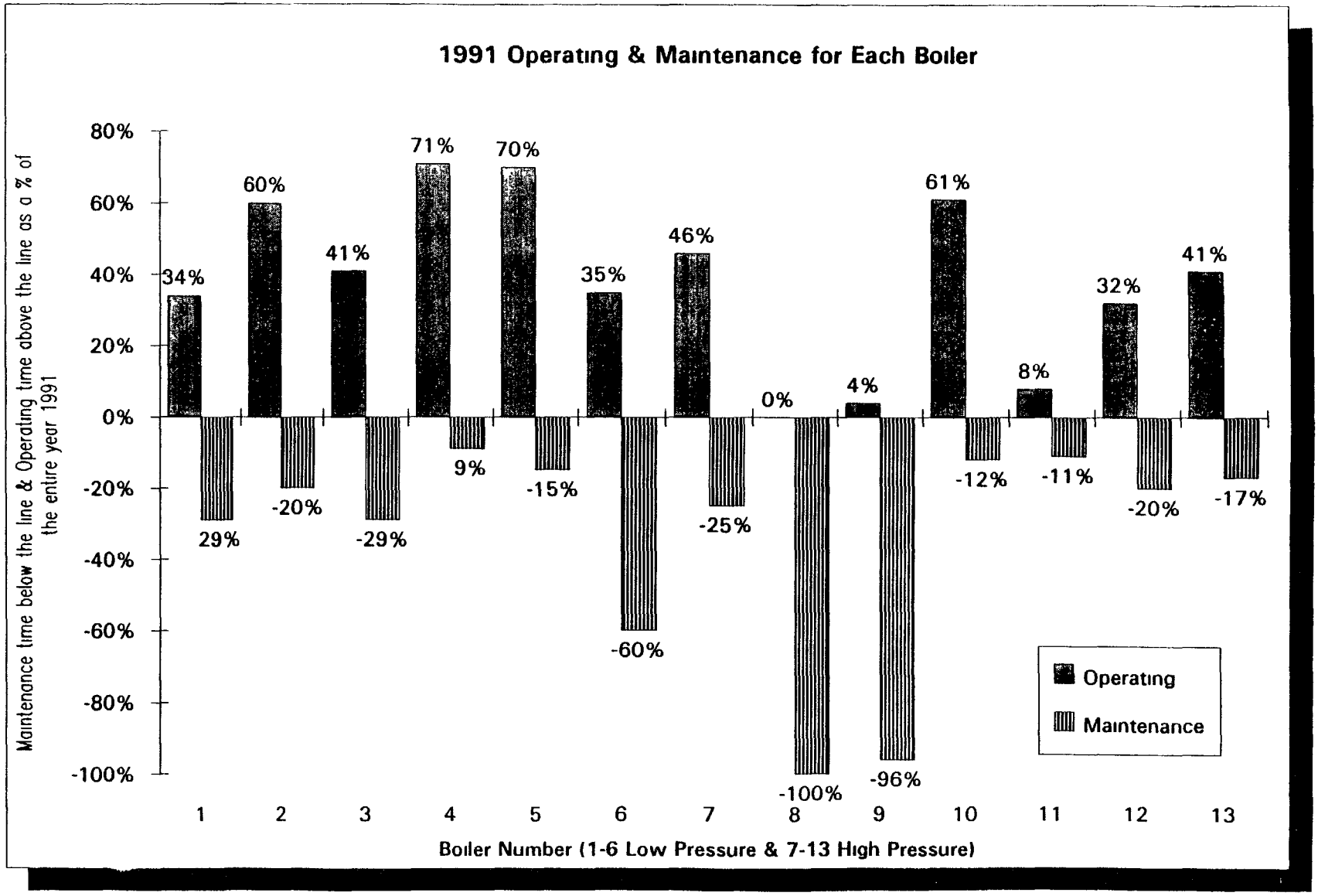
1991 Operating & Maintenance for Each Boiler
Maintenance time below the line & Operating time above the line as a % of the entire year 1991
80%
60%
40%
20%
0%
-20%
-40%
-60%
-80%
-100%
34%
29%
60%
-20%
41%
-29%
71%
9%
70%
-15%
35%
-60%
46%
-25%
0%
-100%
4%
-96%
61%
-12%
8%
-11%
32%
-20%
41%
-17%
1
2
3
4
5
6
7
8
9
10
11
12
13
Boiler Number (1-6 Low Pressure & 7-13 High Pressure)
Operating
Maintenance

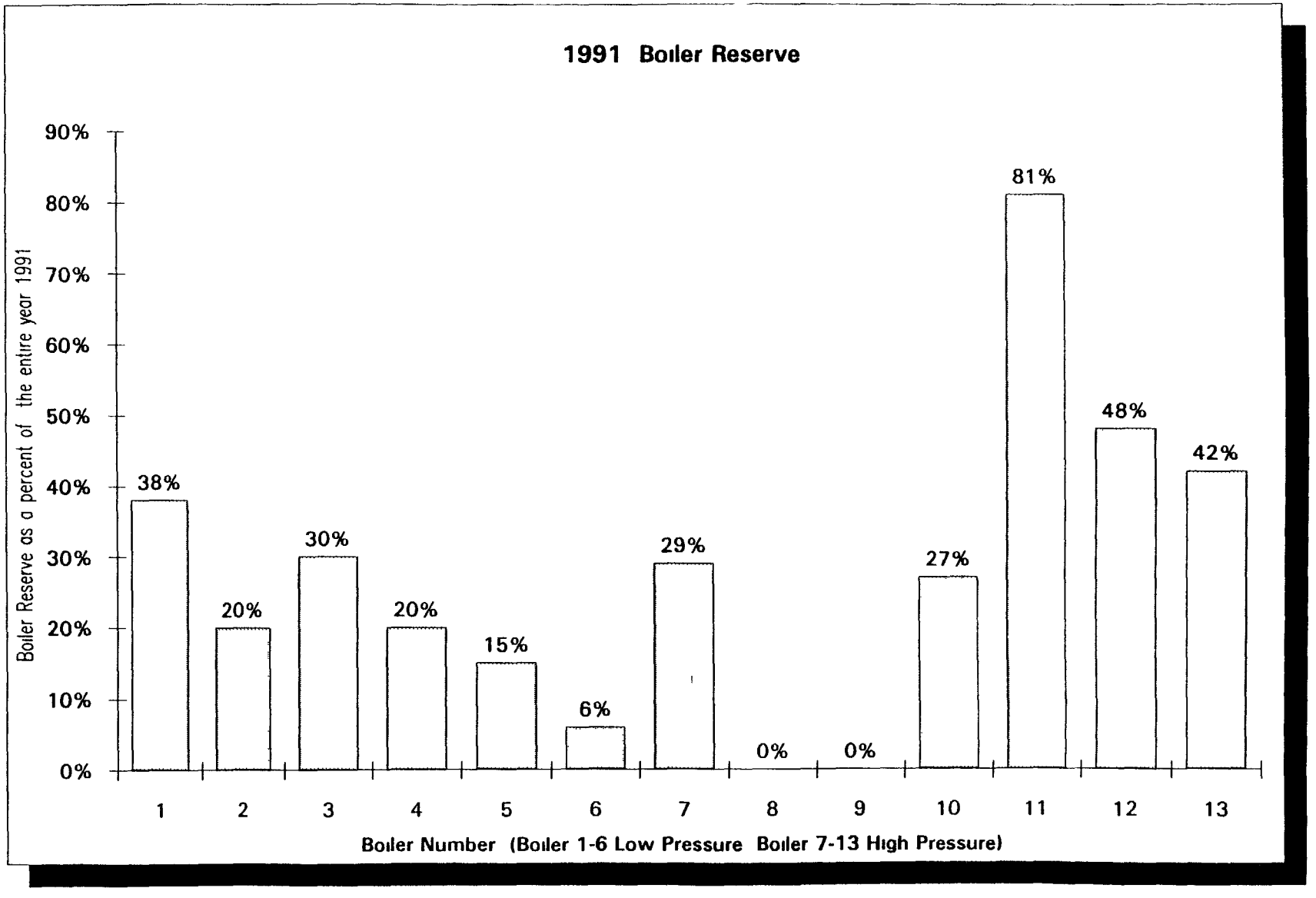
1991 Boiler Reserve
Boiler Reserve as a percent of the entire year 1991
90%
80%
70%
60%
50%
40%
30%
20%
10%
0%
38%
20%
30%
20%
15%
6%
29%
0%
0%
27%
81%
48%
42%
1
2
3
4
5
6
7
8
9
10
11
12
13
Boiler Number (Boiler 1-6 Low Pressure Boiler 7-13 High Pressure)

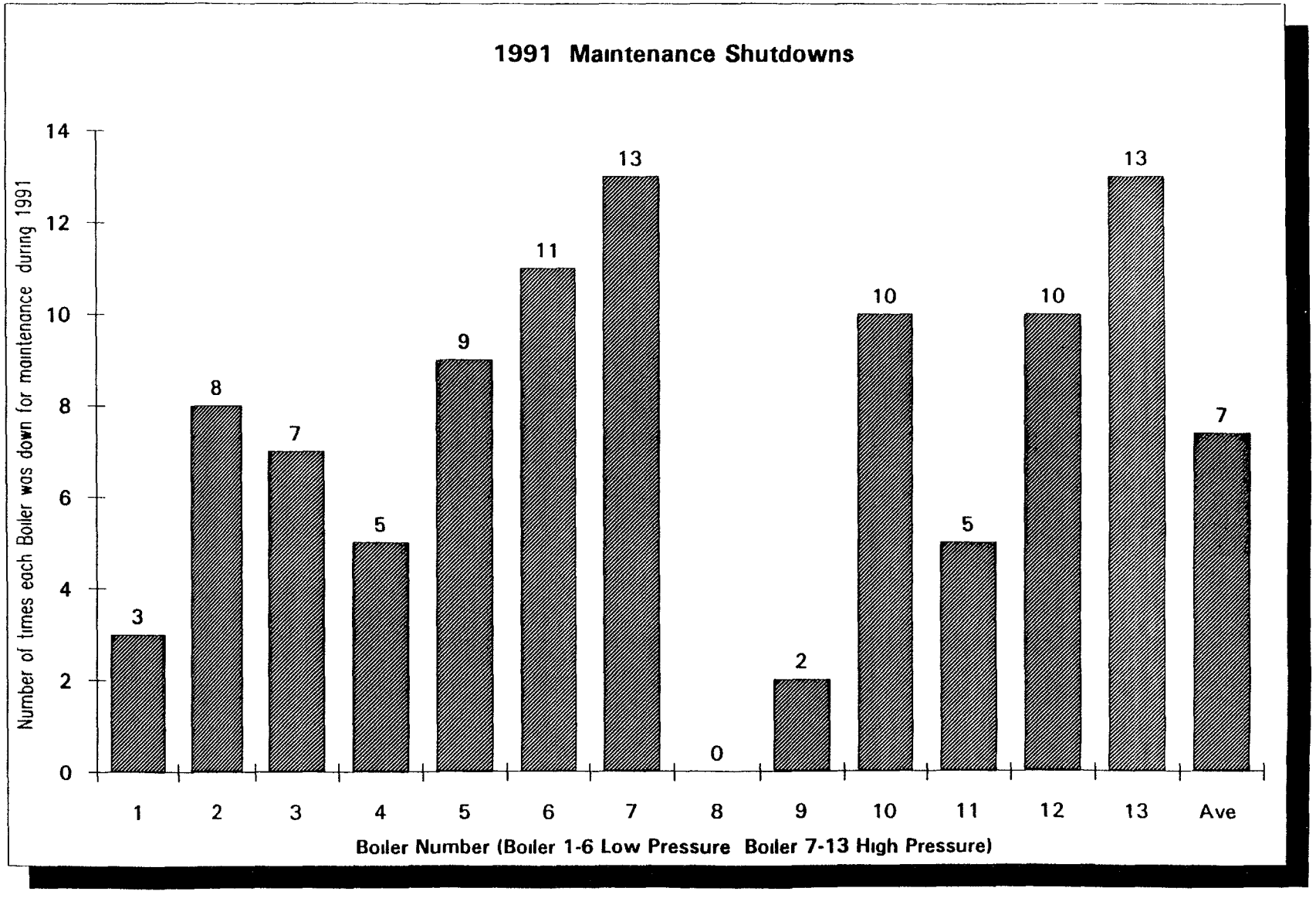
1991 Maintenance Shutdowns
Number of times each Boiler was down for maintenance during 1991
0
2
4
6
8
10
12
14
3
8
7
5
9
11
13
0
2
10
5
10
13
7
1
2
3
4
5
6
7
8
9
10
11
12
13
Ave
Boiler Number (Boiler 1-6 Low Pressure Boiler 7-13 High Pressure)

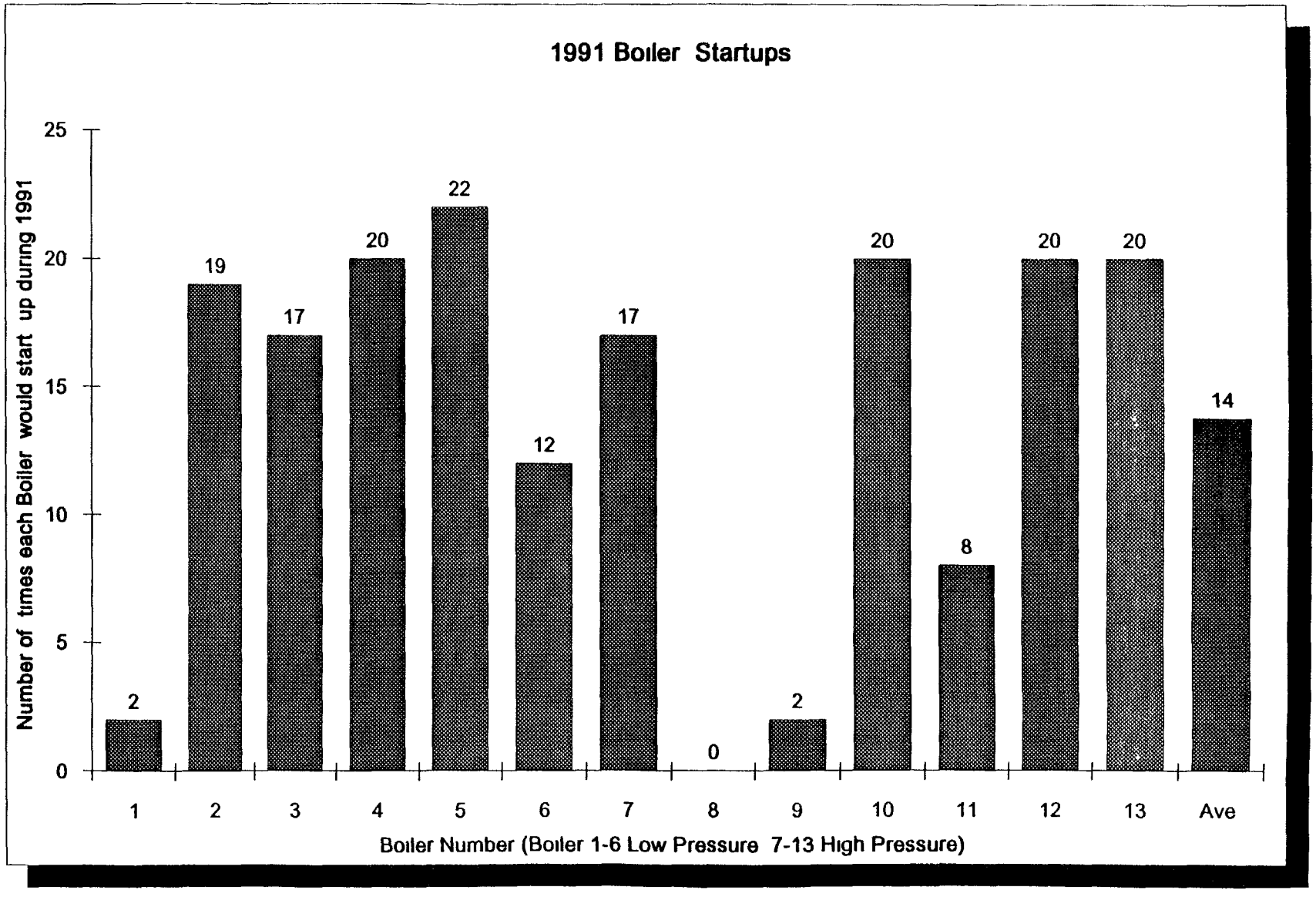
1991 Boiler Startups
Number of times each Boiler would start up during 1991
25
20
15
10
5
0
2
19
17
20
22
12
17
0
2
20
8
20
20
14
1
2
3
4
5
6
7
8
9
10
11
12
13
Ave
Boiler Number (Boiler 1-6 Low Pressure 7-13 High Pressure)

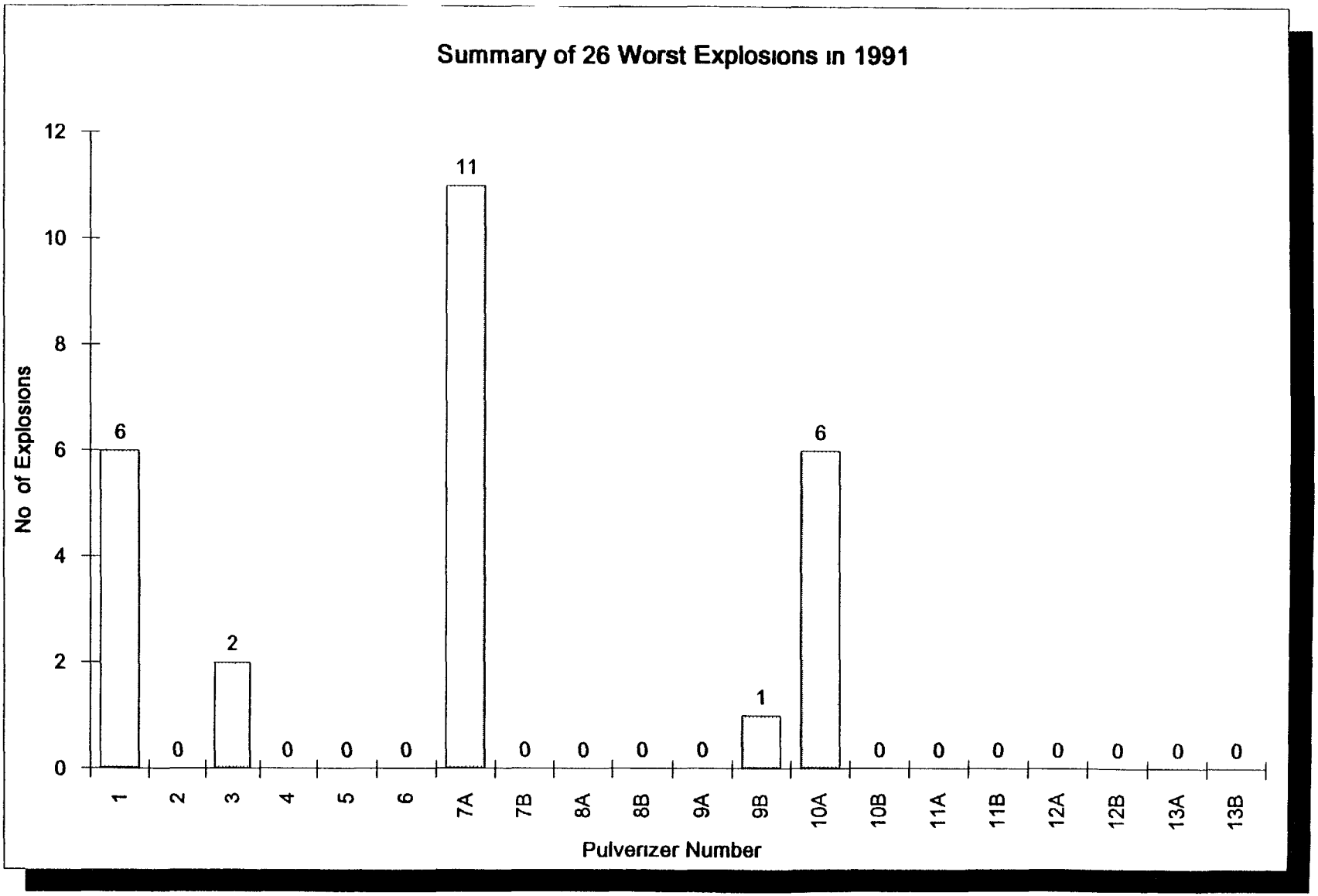
Summary of 26 Worst Explosions in 1991
No of Explosions
0
2
4
6
8
10
12
6
0
2
0
0
0
11
0
0
0
0
1
6
0
0
0
0
0
0
0
1
2
3
4
5
6
7A
7B
8A
8B
9A
9B
10A
10B
11A
11B
12A
12B
13A
13B
Pulverizer Number

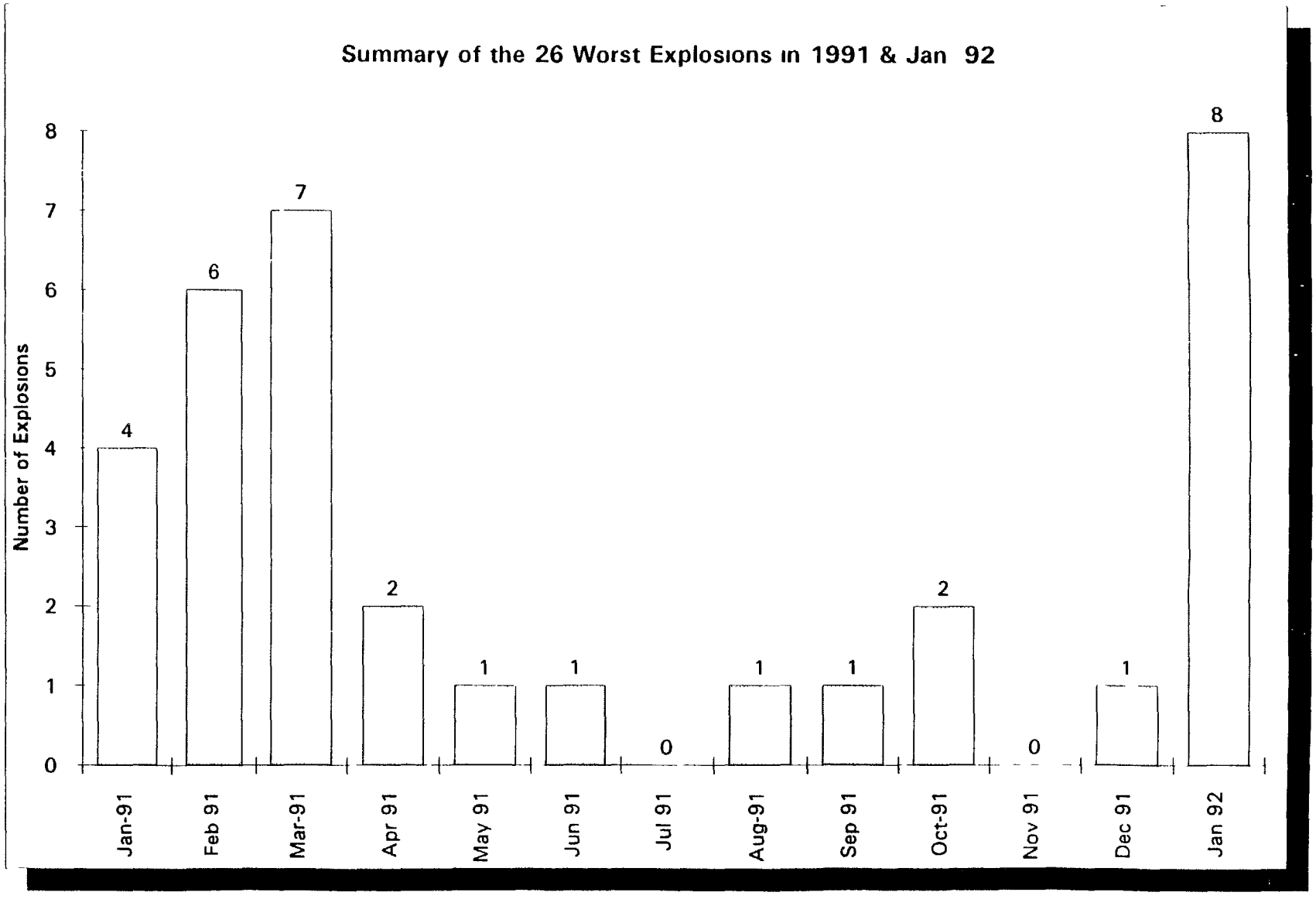
Summary of the 26 Worst Explosions in 1991 & Jan 92
Number of Explosions
0
1
2
3
4
5
6
7
8
4
6
7
2
1
1
0
1
1
2
0
1
8
Jan-91
Feb 91
Mar-91
Apr 91
May 91
Jun 91
Jul 91
Aug-91
Sep 91
Oct-91
Nov 91
Dec 91
Jan 92

# BOILER AVAILABILITY

# DATA SHEETS

# MONGOLIAN PEOPLES REPUBLIC

# ULAN BARTAR

# POWER PLANT No. 3

J O 6874 001



63

OPERATION OF BOILERS
Ulan Bartar Power Plant #3
Mongolian Peoples Republic Project
19-May-92 Summary J O 6874 001

| Boiler No | CONDITION | Average | Startups | Maintenance | Explosions |
|---|---|---|---|---|---|
| | OPERATING | 34% | 2 | | |
| 1 | RESERVE | 38% | | | |
| | MAINTENANCE | 29% | | 3 | 6 |
| | OPERATING | 60% | 19 | | |
| 2 | RESERVE | 20% | | | |
| | MAINTENANCE | 20% | | 8 | |
| | OPERATING | 41% | 17 | | |
| 3 | RESERVE | 30% | | | |
| | MAINTENANCE | 29% | | 7 | 2 |
| | OPERATING | 71% | 20 | | |
| 4 | RESERVE | 20% | | | |
| | MAINTENANCE | 9% | | 5 | |
| | OPERATING | 70% | 22 | | |
| 5 | RESERVE | 15% | | | |
| | MAINTENANCE | 15% | | 9 | |
| | OPERATING | 35% | 12 | | |
| 6 | RESERVE | 6% | | | |
| | MAINTENANCE | 60% | | 11 | |
| | OPERATING | 46% | 17 | | |
| 7 | RESERVE | 29% | | | |
| | MAINTENANCE | 25% | | 13 | 11 |
| | OPERATING | 0% | 0 | | |
| 8 | RESERVE | 0% | | | |
| | MAINTENANCE | 100% | | 0 | |
| | OPERATING | 4% | 2 | | |
| 9 | RESERVE | 0% | | | |
| | MAINTENANCE | 96% | | 2 | 1 |
| | OPERATING | 61% | 20 | | |
| 10 | RESERVE | 27% | | | |
| | MAINTENANCE | 12% | | 10 | 6 |
| | OPERATING | 8% | 8 | | |
| 11 | RESERVE | 81% | | | |
| | MAINTENANCE | 11% | | 5 | |
| | OPERATING | 32% | 20 | | |
| 12 | RESERVE | 48% | | | |
| | MAINTENANCE | 20% | | 10 | |
| | OPERATING | 41% | 20 | | |
| 13 | RESERVE | 42% | | | |
| | MAINTENANCE | 17% | | 13 | |
| | OPERATING | 39% | 179 | | |
| Ave 1991 | RESERVE | 27% | 14 | 7 | |
| | MAINTENANCE | 34% | | 96 | 26 |



64

OPERATION OF BOILERS
Ulan Bartar Power Plant #3
Mongolian Peoples Republic Project

19-May-92 Summary J O 6874 001 Low Pressure

| MONTH | CONDITION | Blr # 1 | | Blr # 2 | | Blr # 3 | | Blr # 4 | |
|---|---|---|---|---|---|---|---|---|---|
| Jan 91 | OPERATING | 94% | 2 | 40% | 2 | 29% | 3 | 76% | 2 |
| | RESERVE | 0% | | 7% | | 50% | | 11% | |
| 31 | MAINTENANCE | 6% | 1 | 52% | 2 | 21% | 2 | 13% | 1 |
| Feb-91 | OPERATING | 27% | | 93% | 2 | 14% | 2 | 77% | |
| | RESERVE | 36% | | 7% | | 79% | | 0% | |
| 28 | MAINTENANCE | 38% | 1 | 0% | | 7% | 1 | 23% | 1 |
| Mar-91 | OPERATING | 90% | | 84% | 1 | 0% | | 52% | 2 |
| | RESERVE | 10% | | 16% | | 0% | | 19% | |
| 31 | MAINTENANCE | 0% | | 0% | | 100% | | 29% | 1 |
| Apr-91 | OPERATING | 0% | | 100% | | 0% | | 65% | 1 |
| | RESERVE | 100% | | 0% | | 0% | | 10% | |
| 30 | MAINTENANCE | 0% | | 0% | | 100% | | 25% | 1 |
| May-91 | OPERATING | 0% | | 44% | 2 | 29% | 1 | 100% | |
| | RESERVE | 100% | | 0% | | 0% | | 0% | |
| 31 | MAINTENANCE | 0% | | 56% | 3 | 71% | 1 | 0% | |
| Jun-91 | OPERATING | 0% | | 0% | | 40% | 2 | 72% | 5 |
| | RESERVE | 100% | | 0% | | 42% | | 17% | |
| 30 | MAINTENANCE | 0% | | 100% | | 18% | 1 | 12% | |
| Jul-91 | OPERATING | 0% | | 18% | 3 | 60% | 1 | 76% | 2 |
| | RESERVE | 0% | | 45% | | 40% | | 19% | |
| 31 | MAINTENANCE | 100% | 1 | 37% | 3 | 0% | | 5% | 1 |
| Aug-91 | OPERATING | 0% | | 61% | 2 | 42% | 3 | 76% | 1 |
| | RESERVE | 0% | | 39% | | 58% | | 24% | |
| 31 | MAINTENANCE | 100% | | 0% | | 0% | | 0% | |
| Sep 91 | OPERATING | 0% | | 77% | 3 | 70% | 1 | 72% | 1 |
| | RESERVE | 0% | | 23% | | 27% | | 28% | |
| 30 | MAINTENANCE | 100% | | 0% | | 3% | 1 | 0% | |
| Oct-91 | OPERATING | 56% | | 58% | 0 | 73% | 1 | 66% | 3 |
| | RESERVE | 44% | | 42% | | 0% | | 34% | |
| 31 | MAINTENANCE | 0% | | 0% | | 27% | 1 | 0% | |
| Nov-91 | OPERATING | 52% | | 68% | 2 | 57% | 1 | 68% | 1 |
| | RESERVE | 48% | | 33% | | 43% | | 32% | |
| 30 | MAINTENANCE | 0% | | 0% | | 0% | | 0% | |
| Dec-91 | OPERATING | 87% | | 73% | 2 | 76% | 2 | 53% | 2 |
| | RESERVE | 13% | | 27% | | 24% | | 47% | |
| 31 | MAINTENANCE | 0% | | 0% | | 0% | | 0% | |
| Ave 1991 | OPERATING | 34% | 2 | 60% | 19 | 41% | 17 | 71% | 20 |
| | RESERVE | 38% | 0 | 20% | 0 | 30% | 0 | 20% | 0 |
| | MAINTENANCE | 29% | 3 | 20% | 8 | 29% | 7 | 9% | 5 |

Note 1 - Reserve mode - Able to operate Maintenance mode - Unable to operate

OPERATION OF BOILERS
Ulan Bartar Power Plant #3
Mongolian Peoples Republic Project

19-May 92 Summary J O 6874 001 Low Pressure

| MONTH | CONDITION | Blr # 5 | | Blr # 6 | | | | | |
|---|---|---|---|---|---|---|---|---|---|
| Jan-91 | OPERATING | 76% | 2 | 87% | 3 | | | | |
| | RESERVE | 11% | | 5% | | | | | |
| 31 | MAINTENANCE | 13% | 1 | 8% | 3 | | | | |
| Feb-91 | OPERATING | 77% | | 77% | 2 | | | | |
| | RESERVE | 0% | | 7% | | | | | |
| 28 | MAINTENANCE | 23% | 1 | 16% | 3 | | | | |
| Mar-91 | OPERATING | 79% | 2 | 74% | 3 | | | | |
| | RESERVE | 0% | | 0% | | | | | |
| 31 | MAINTENANCE | 21% | 0 | 26% | 4 | | | | |
| Apr 91 | OPERATING | 93% | 3 | 0% | | | | | |
| | RESERVE | 0% | | 0% | | | | | |
| 30 | MAINTENANCE | 7% | 2 | 100% | | | | | |
| May-91 | OPERATING | 3% | 1 | 0% | | | | | |
| | RESERVE | 3% | | 0% | | | | | |
| 31 | MAINTENANCE | 94% | 1 | 100% | | | | | |
| Jun 91 | OPERATING | 85% | 2 | 0% | | | | | |
| | RESERVE | 8% | | 0% | | | | | |
| 30 | MAINTENANCE | 7% | 1 | 100% | | | | | |
| Jul-91 | OPERATING | 61% | 2 | 0% | | | | | |
| | RESERVE | 39% | | 0% | | | | | |
| 31 | MAINTENANCE | 0% | 0 | 100% | | | | | |
| Aug-91 | OPERATING | 92% | 1 | 0% | | | | | |
| | RESERVE | 8% | | 0% | | | | | |
| 31 | MAINTENANCE | 0% | 0 | 100% | | | | | |
| Sep-91 | OPERATING | 45% | 2 | 0% | | | | | |
| | RESERVE | 45% | | 0% | | | | | |
| 30 | MAINTENANCE | 10% | 1 | 100% | | | | | |
| Oct-91 | OPERATING | 77% | 3 | 13% | 1 | | | | |
| | RESERVE | 21% | | 21% | | | | | |
| 31 | MAINTENANCE | 2% | 1 | 66% | 1 | | | | |
| Nov-91 | OPERATING | 77% | 2 | 77% | 2 | | | | |
| | RESERVE | 17% | | 23% | | | | | |
| 30 | MAINTENANCE | 7% | 1 | 0% | | | | | |
| Dec-91 | OPERATING | 71% | 2 | 89% | 1 | | | | |
| | RESERVE | 29% | | 11% | | | | | |
| 31 | MAINTENANCE | 0% | 0 | 0% | | | | | |
| Ave 1991 | OPERATING | 70% | 22 | 35% | 12 | 0% | 0 | 0% | 0 |
| | RESERVE | 15% | 0 | 6% | 0 | 0% | 0 | 0% | 0 |
| | MAINTENANCE | 15% | 9 | 60% | 11 | 0% | 0 | 0% | 0 |

Note 1 - Reserve mode Able to operate Maintenance mode - Unable to operate



106

OPERATION OF BOILERS
Ulan Bartar Power Plant #3
Mongolian Peoples Republic Project

19 May 92 Summary J O 6874 001 High Pressure

| MONTH | CONDITION | Blr # 7 | | Blr # 8 | | Blr #9 | | Blr # 10 | |
|---|---|---|---|---|---|---|---|---|---|
| Jan-91 | OPERATING | 61% | 3 | 0% | | 50% | 2 | 31% | 2 |
| | RESERVE | 6% | | 0% | | 0% | | 53% | |
| 31 | MAINTENANCE | 32% | 2 | 100% | | 50% | 2 | 16% | 2 |
| Feb-91 | OPERATING | 79% | 4 | 0% | | 0% | | 96% | 1 |
| | RESEP 'E | 0% | | 0% | | 0% | | 4% | |
| 28 | MAINTENANCE | 21% | 4 | 100% | | 100% | | 0% | |
| Mar-91 | OPERATING | 31% | 0 | 0% | | 0% | | 69% | 3 |
| | RESERVE | 13% | | 0% | | 0% | | 3% | |
| 31 | MAINTENANCE | 56% | 2 | 100% | | 100% | | 27% | 3 |
| Apr-91 | OPERATING | 65% | 3 | 0% | | 0% | | 53% | 1 |
| | RESERVE | 18% | | 0% | | 0% | | 2% | |
| 30 | MAINTENANCE | 17% | 1 | 100% | | 100% | | 45% | 1 |
| May 91 | OPERATING | 52% | 2 | 0% | | 0% | | 71% | 3 |
| | RESERVE | 24% | | 0% | | 0% | | 8% | |
| 31 | MAINTENANCE | 24% | 3 | 100% | | 100% | | 21% | 1 |
| Jun-91 | OPERATING | 0% | | 0% | | 0% | | 95% | 1 |
| | RESERVE | 0% | | 0% | | 0% | | 5% | |
| 30 | MAINTENANCE | 100% | 1 | 100% | | 100% | | 0% | |
| Jul-91 | OPERATING | 0% | | 0% | | 0% | | 19% | 1 |
| | RESERVE | 45% | 0 | 0% | | 0% | | 45% | |
| 31 | MAINTENANCE | 55% | 0 | 100% | | 100% | | 35% | 2 |
| Aug-91 | OPERATING | 24% | | 0% | | 0% | | 26% | 2 |
| | RESERVE | 76% | | 0% | | 0% | | 74% | |
| 31 | MAINTENANCE | 0% | 0 | 100% | | 100% | | 0% | |
| Sep-91 | OPERATING | 25% | 1 | 0% | | 0% | | 28% | 2 |
| | RESERVE | 75% | | 0% | | 0% | | 72% | |
| 30 | MAINTENANCE | 0% | 0 | 100% | | 100% | | 0% | |
| Oct-91 | OPERATING | 53% | 2 | 0% | | 0% | | 82% | 3 |
| | RESERVE | 47% | | 0% | | 0% | | 15% | |
| 31 | MAINTENANCE | 0% | 0 | 100% | | 100% | | 3% | 1 |
| Nov-91 | OPERATING | 58% | 2 | 0% | | 0% | | 75% | |
| | RESERVE | 42% | | 0% | | 0% | | 25% | |
| 30 | MAINTENANCE | 0% | 0 | 100% | | 100% | | 0% | |
| Dec-91 | OPERATING | 100% | | 0% | | 0% | | 85% | 1 |
| | RESERVE | 0% | | 0% | | 0% | | 15% | |
| 31 | MAINTENANCE | 0% | 0 | 100% | | 100% | | 0% | |
| Ave 1991 | OPERATING | 46% | 17 | 0% | 0 | 4% | 2 | 61% | 20 |
| | RESERVE | 29% | 0 | 0% | 0 | 0% | 0 | 27% | 0 |
| | MAINTENANCE | 25% | 13 | 100% | 0 | 96% | 2 | 12% | 10 |

Note 1 - Reserve mode - Able to operate Maintenance mode - Unable to operate



67

OPERATION OF BOILERS
Ulan Bartar Power Plant #3
Mongolian Peoples Republic Project

19 May-92 Summary J O 6874 001 High Pressure

| MONTH | CONDITION | Blr #11 | | Blr # 12 | | Blr # 13 | | | |
|---|---|---|---|---|---|---|---|---|---|
| Jan 91 | OPERATING | 24% | 1 | 31% | 4 | 69% | 2 | | |
| | RESERVE | 34% | | 42% | | 16% | | | |
| 31 | MAINTENANCE | 42% | 1 | 27% | 4 | 15% | 1 | | |
| Feb-91 | OPERATING | 0% | | 7% | 2 | 45% | 3 | | |
| | RESERVE | 100% | | 14% | | 14% | | | |
| 28 | MAINTENANCE | 0% | | 79% | 2 | 41% | 4 | | |
| Mar 91 | OPERATING | 42% | 2 | 0% | | 71% | 2 | | |
| | RESERVE | 11% | | 0% | | 0% | | | |
| 31 | MAINTENANCE | 47% | 2 | 100% | | 29% | 2 | | |
| Apr-91 | OPERATING | 8% | 1 | 27% | 2 | 45% | 3 | | |
| | RESERVE | 80% | | 70% | | 35% | | | |
| 30 | MAINTENANCE | 12% | 1 | 3% | 1 | 20% | 2 | | |
| May-91 | OPERATING | 16% | 3 | 47% | 4 | 44% | 2 | | |
| | RESERVE | 87% | | 44% | | 50% | | | |
| 31 | MAINTENANCE | 0% | | 10% | 1 | 6% | 1 | | |
| Jun-91 | OPERATING | 0% | | 57% | 1 | 53% | 2 | | |
| | RESERVE | 100% | | 37% | | 5% | | | |
| 30 | MAINTENANCE | 0% | | 7% | 1 | 42% | 2 | | |
| Jul-91 | OPERATIN | 3% | 1 | 47% | | 0% | | | |
| | RESERVE | 61% | | 37% | | 48% | | | |
| 31 | MAINTENANCE | 35% | 1 | 16% | 1 | 52% | 1 | | |
| Aug-91 | OPERATING | 0% | | 26% | 1 | 6% | 1 | | |
| | RESERVE | 100% | | 74% | | 94% | | | |
| 31 | MAINTENANCE | 0% | | 0% | | 0% | | | |
| Sep-91 | OPERATING | 0% | | 0% | | 8% | | | |
| | RESERVE | 100% | | 100% | | 92% | | | |
| 30 | MAINTENANCE | 0% | | 0% | | 0% | | | |
| Oct 91 | OPERATING | 0% | | 50% | 3 | 35% | 1 | | |
| | RESERVE | 100% | | 50% | | 65% | | | |
| 31 | MAINTENANCE | 0% | | 0% | | 0% | | | |
| Nov-91 | OPERATING | 0% | | 32% | 2 | 62% | 2 | | |
| | RESERVE | 100% | | 68% | | 38% | | | |
| 30 | MAINTENANCE | 0% | | 0% | | 0% | | | |
| Dec-91 | OPERATING | 0% | | 56% | 1 | 56% | 2 | | |
| | RESERVE | 100% | | 40% | | 44% | | | |
| 31 | MAINTENANCE | 0% | | 0% | | 0% | | | |
| Ave 1991 | OPERATING | 8% | 8 | 32% | 20 | 41% | 20 | 0% | 0 |
| | RESERVE | 81% | 0 | 48% | 0 | 42% | 0 | 0% | 0 |
| | MAINTENANCE | 11% | 5 | 20% | 10 | 17% | 13 | 0% | 0 |

Note 1 - Reserve mode - Able to operate Maintenance mode - Unable to operate



68

# TURBINE AVAILABILITY

# DATA SHEETS

# MONGOLIAN PEOPLES REPUBLIC

# ULAN BARTAR

# POWER PLANT No. 3

J O 6874 001


| Page No | Data Sheet |
|---|---|
| 2 | Low Pressure |
| 3 | High Pressure |

OPERATION OF TURBINES
Ulan Bartar Power Plant #3
Mongolian Peoples Republic Project

19-May 92 Summary J O 6874 001 Low Pressure

| MONTH | CONDITION | Turbine #1 | | Turbine #2 | | Turbine #3 | | Turbine #4 | |
|---|---|---|---|---|---|---|---|---|---|
| Jan-91 | OPERATING | 87% | 3 | 10% | 1 | 89% | 1 | 100% | 1 |
| | RESERVE | 11% | | 71% | | 8% | | 0% | |
| 31 | MAINTENANCE | 2% | 1 | 19% | 1 | 3% | 1 | 0% | |
| Feb 91 | OPERATING | 93% | | 4% | 1 | 0% | | 100% | |
| | RESERVE | 7% | | 75% | | 100% | | 0% | |
| 28 | MAINTENANCE | 0% | | 21% | 1 | 0% | | 0% | |
| Mar-91 | OPERATING | 21% | 1 | 0% | | 92% | 3 | 71% | 2 |
| | RESERVE | 0% | | 0% | | 3% | | 19% | |
| 31 | | 79% | 1 | 100% | 1 | 5% | 2 | 10% | 2 |
| Apr 91 | OPERATING | 3% | 1 | 77% | 1 | 61% | 2 | 15% | 1 |
| | RESERVE | 72% | | 20% | | 12% | | 50% | |
| 30 | MAINTENANCE | 25% | 1 | 3% | | 27% | 2 | 35% | |
| May 91 | OPERATING | 0% | | 11% | 1 | 85% | 1 | 5% | 1 |
| | RESERVE | 100% | | 84% | | 15% | | 95% | |
| 31 | MAINTENANCE | 0% | | 5% | 1 | 0% | | 0% | |
| Jun-91 | OPERATING | 0% | | 93% | 2 | 65% | 6 | 15% | 1 |
| | RESERVE | 93% | | 7% | | 35% | | 70% | |
| 30 | MAINTENANCE | 7% | 1 | 0% | | 0% | | 15% | 2 |
| Jul 91 | OPERATING | 0% | | 77% | | 79% | 1 | 10% | 3 |
| | RESERVE | 55% | | 23% | | 21% | | 84% | |
| 31 | MAINTENANCE | 45% | 2 | 0% | | 0% | | 6% | 2 |
| Aug-91 | OPERATING | 0% | | 73% | 3 | 85% | 1 | 55% | 1 |
| | RESERVE | 100% | | 27% | | 15% | | 42% | |
| 31 | MAINTENANCE | 0% | | 0% | | 0% | | 3% | 1 |
| Sep-91 | OPERATING | 5% | 1 | 93% | 1 | 85% | 1 | 0% | |
| | RESERVE | 95% | | 7% | | 15% | | 100% | |
| 30 | MAINTENANCE | 0% | | 0% | | 0% | | 0% | |
| Oct-91 | OPERATING | 18% | 2 | 97% | 1 | 89% | 1 | 53% | 2 |
| | RESERVE | 82% | | 0% | | 11% | | 47% | |
| 31 | MAINTENANCE | 0% | | 3% | 1 | 0% | | 0% | |
| Nov-91 | OPERATING | 72% | 1 | 28% | | 100% | | 90% | 3 |
| | RESERVE | 28% | | 0% | | 0% | | 3% | |
| 30 | MAINTENANCE | 0% | | 72% | 1 | 0% | | 7% | 2 |
| Dec-91 | OPERATING | 90% | 3 | 52% | 5 | 92% | 2 | 98% | 1 |
| | RESERVE | 10% | | 48% | | 8% | | 2% | |
| 31 | MAINTENANCE | 0% | | 0% | | 0% | | 0% | |
| Ave 1991 | OPERATING | 32% | 12 | 51% | 16 | 77% | 19 | 51% | 16 |
| | RESERVE | 54% | 0 | 30% | 0 | 20% | 0 | 43% | 0 |
| | MAINTENANCE | 13% | 6 | 19% | 6 | 3% | 5 | 6% | 9 |

Note 1 - Reserve mode - Able to operate Maintenance mode - Unable to operate



70

OPERATION OF TURBINES
Ulan Bartar Power Plant #3
Mongolian Peoples Republic Project

19-May 92 Summary J O 6874 001 High Pressure

| MONTH | CONDITION | Turbine #5 | | Turbine #6 | | Turbine #7 | | Turbine #8 | |
|---|---|---|---|---|---|---|---|---|---|
| Jan-91 | OPERATING | 66% | 4 | 44% | 5 | 50% | 2 | 97% | 2 |
| | RESERVE | 34% | | 50% | | 23% | | 0% | |
| 31 | MAINTENANCE | 0% | | 6% | 2 | 27% | 1 | 3% | 1 |
| Feb 91 | OPERATING | 68% | 2 | 54% | 1 | 23% | 2 | 80% | 1 |
| | RESERVE | 7% | | 29% | | 70% | | 20% | |
| 28 | MAINTENANCE | 25% | 1 | 18% | 2 | 7% | 1 | 0% | |
| Mar-91 | OPERATING | 98% | 1 | 66% | 1 | 21% | 2 | 53% | 3 |
| | RESERVE | 0% | | 8% | | 0% | | 47% | |
| 31 | MAINTENANCE | 2% | 1 | 26% | 1 | 79% | 2 | 0% | |
| Apr 91 | OPERATING | 44% | 1 | 80% | 4 | 52% | 1 | 17% | |
| | RESERVE | 48% | | 18% | | 23% | | 75% | |
| 30 | MAINTENANCE | 8% | 1 | 2% | 1 | 25% | 1 | 8% | 1 |
| May-91 | OPERATING | 74% | 1 | 94% | 3 | 37% | 3 | 37% | 2 |
| | RESERVE | 26% | | 6% | | 15% | | 21% | |
| 31 | MAINTENANCE | 0% | | 0% | | 48% | 1 | 42% | 1 |
| Jun-91 | OPERATING | 57% | 3 | 98% | 1 | 52% | 5 | 0% | |
| | RESERVE | 21% | | 2% | | 13% | | 0% | |
| 30 | MAINTENANCE | 22% | 2 | 0% | | 35% | 5 | 100% | |
| Jul-91 | OPERATING | 45% | 1 | 5% | 1 | 24% | | 0% | |
| | RESERVE | 55% | | 90% | | 0% | | 0% | |
| 31 | MAINTENANCE | 0% | | 5% | 1 | 76% | 1 | 100% | |
| Aug-91 | OPERATING | 42% | 1 | 40% | 1 | 39% | 2 | 0% | |
| | RESERVE | 58% | | 60% | | 58% | | 0% | |
| 31 | MAINTENANCE | 0% | | 0% | | 3% | 1 | 100% | |
| Sep-91 | OPERATING | 42% | 1 | 0% | | 12% | 1 | 0% | |
| | RESERVE | 58% | | 100% | | 88% | | 0% | |
| 30 | MAINTENANCE | 0% | | 0% | | 0% | | 100% | |
| Oct-91 | OPERATING | 90% | 2 | 32% | 2 | 87% | 2 | 0% | |
| | RESERVE | 5% | | 15% | | 10% | | 0% | |
| 31 | MAINTENANCE | 5% | 1 | 53% | 1 | 3% | 1 | 100% | |
| Nov 91 | OPERATING | 73% | 1 | 27% | 1 | 97% | 2 | 0% | |
| | RESERVE | 27% | | 73% | | 0% | | 0% | |
| 30 | MAINTENANCE | 0% | | 0% | | 3% | 2 | 100% | |
| Dec-91 | OPERATING | 87% | 1 | 56% | 1 | 71% | 2 | 0% | |
| | RESERVE | 13% | | 44% | | 29% | | 0% | |
| 31 | MAINTENANCE | 0% | | 0% | | 0% | | 100% | |
| Ave 1991 | OPERATING | 66% | 19 | 50% | 21 | 47% | 24 | 24% | 8 |
| | RESERVE | 29% | 0 | 41% | 0 | 27% | 0 | 14% | 0 |
| | MAINTENANCE | 5% | 6 | 9% | 8 | 26% | 16 | 63% | 3 |

Note 1 - Reserve mode - Able to operate Maintenance mode - Unable to operate



11

# BOILER AVAILABILITY

# CHARTS

# MONGOLIAN PEOPLES REPUBLIC

# DERKHAN

# POWER PLANT

J O 6874 001

| Page No | Charts |
|---|---|
| 2 | Explosions |



17

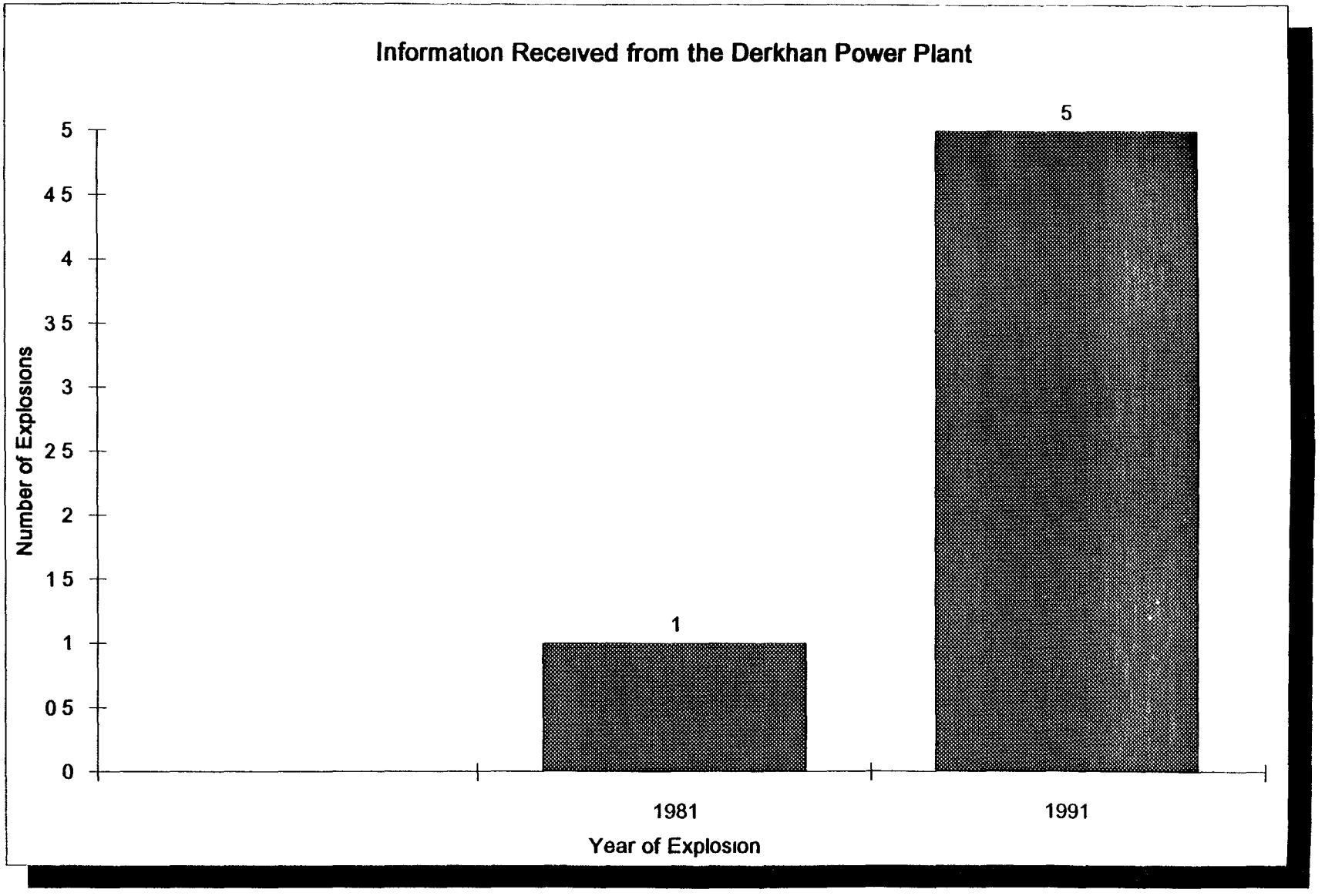
Information Received from the Derkhan Power Plant
Number of Explosions
5
4 5
4
3 5
3
2 5
2
1 5
1
0 5
0
1
5
1981
1991
Year of Explosion

# BOILER AVAILABILITY

# CHARTS

# MONGOLIAN PEOPLES REPUBLIC

## Operating - Reserve - Maintenance

## POWER PLANT No. 3

J O 6874 001


| Page No | Charts |
|---|---|
| 2 | Data Table |
| 3 | Low Pressure Boiler |
| 4 | High Pressure Boiler |
| 5 | All Boilers at Power Plant #3 |


Operating - Boiler on line
Reserve - Boiler off line but available
Maintenance - Boiler not available - Down for repair

| | | | | |
|---|---|---|---|---|
| | Mongolian Peoples Republic | | | |
| | Ulan Bartar Power Plant #3 | | | |
| | J O No 6874 001 | | | |
| | Low Pressure Boilers | | | |
| | Operating | Reserve | Maintenance | |
| Jan-91 | 67% | 14% | 19% | |
| Feb 91 | 61% | 21% | 18% | |
| Mar 91 | 63% | 8% | 29% | |
| Apr 91 | 43% | 18% | 39% | |
| May-91 | 29% | 17% | 53% | |
| Jun-91 | 33% | 28% | 39% | |
| Jul-91 | 36% | 24% | 40% | |
| Aug-91 | 45% | 22% | 33% | |
| Sep-91 | 44% | 21% | 36% | |
| Oct-91 | 57% | 27% | 16% | |
| Nov-91 | 66% | 33% | 1% | |
| Dec-91 | 75% | 25% | 0% | |
| Ave | 52% | 22% | 27% | |
| | High Pressure Boilers | | | |
| | Operating | Reserve | Maintenance | |
| Jan-91 | 38% | 22% | 40% | |
| Feb-91 | 32% | 19% | 49% | |
| Mar 91 | 30% | 4% | 66% | |
| Apr 91 | 28% | 29% | 42% | |
| May-91 | 33% | 30% | 37% | |
| Jun-91 | 29% | 21% | 50% | |
| Jul-91 | 10% | 34% | 56% | |
| Aug 91 | 12% | 60% | 29% | |
| Sep-91 | 9% | 63% | 29% | |
| Oct 91 | 32% | 39% | 29% | |
| Nov-91 | 32% | 39% | 29% | |
| Dec-91 | 43% | 28% | 29% | |
| Ave | 27% | 32% | 40% | |
| | | | | |
| | Average of All Boilers | | | |
| | Operating | Reserve | Maintenance | |
| Jan-91 | 52% | 18% | 30% | |
| Feb-91 | 47% | 20% | 33% | |
| Mar-91 | 47% | 6% | 47% | |
| Apr-91 | 36% | 24% | 40% | |
| May-91 | 31% | 24% | 45% | |
| Jun-91 | 31% | 24% | 45% | |
| Jul-91 | 23% | 29% | 48% | |
| Aug-91 | 28% | 41% | 31% | |
| Sep-91 | 26% | 42% | 32% | |
| Oct 91 | 44% | 33% | 22% | |
| Nov-91 | 49% | 36% | 15% | |
| Dec-91 | 59% | 27% | 14% | |
| Ave | 39% | 27% | 34% | |

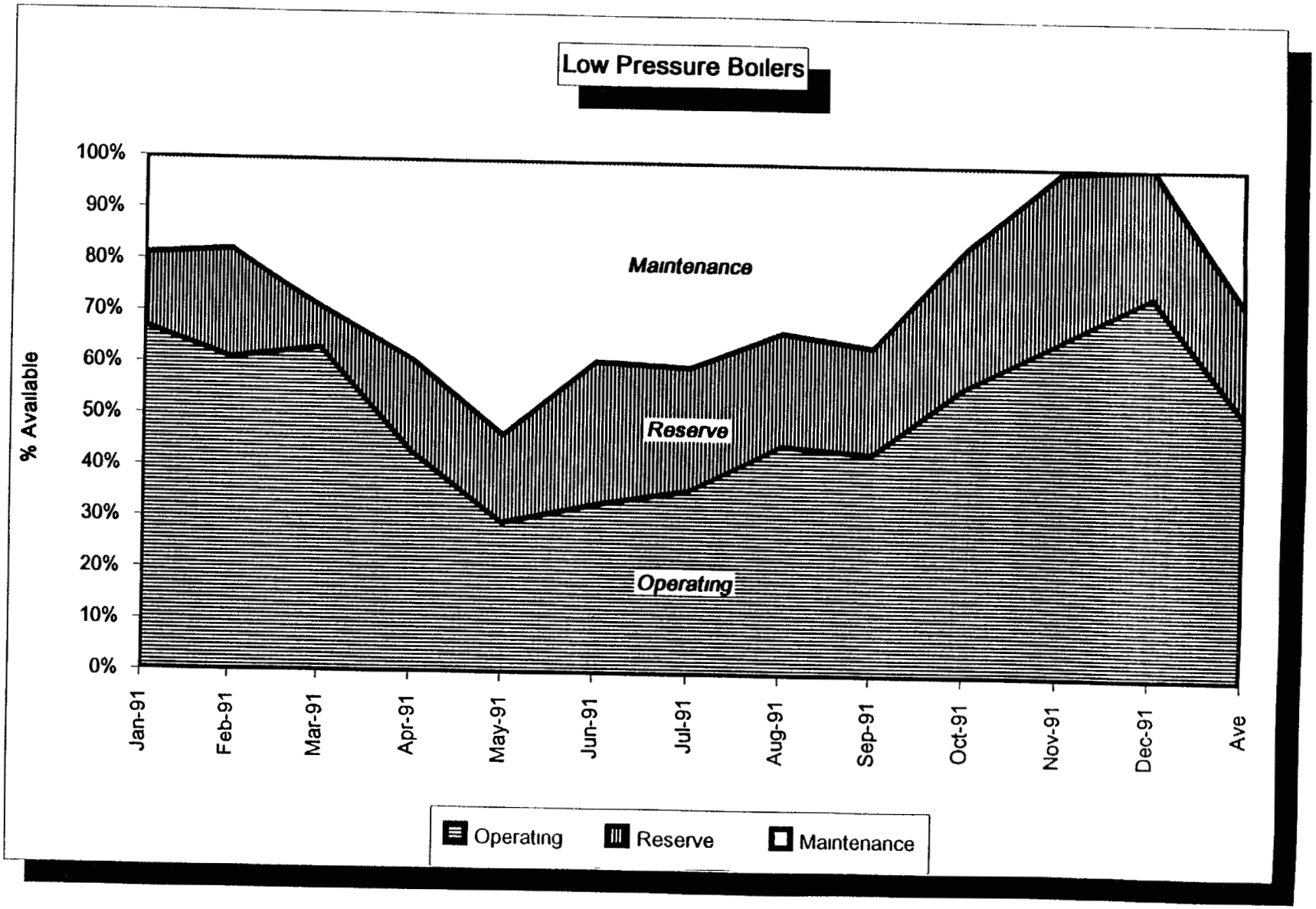
Low Pressure Boilers
% Available
100%
90%
80%
70%
60%
50%
40%
30%
20%
10%
0%
Maintenance
Reserve
Operating
Jan-91
Feb-91
Mar-91
Apr-91
May-91
Jun-91
Jul-91
Aug-91
Sep-91
Oct-91
Nov-91
Dec-91
Ave
Operating
Reserve
Maintenance

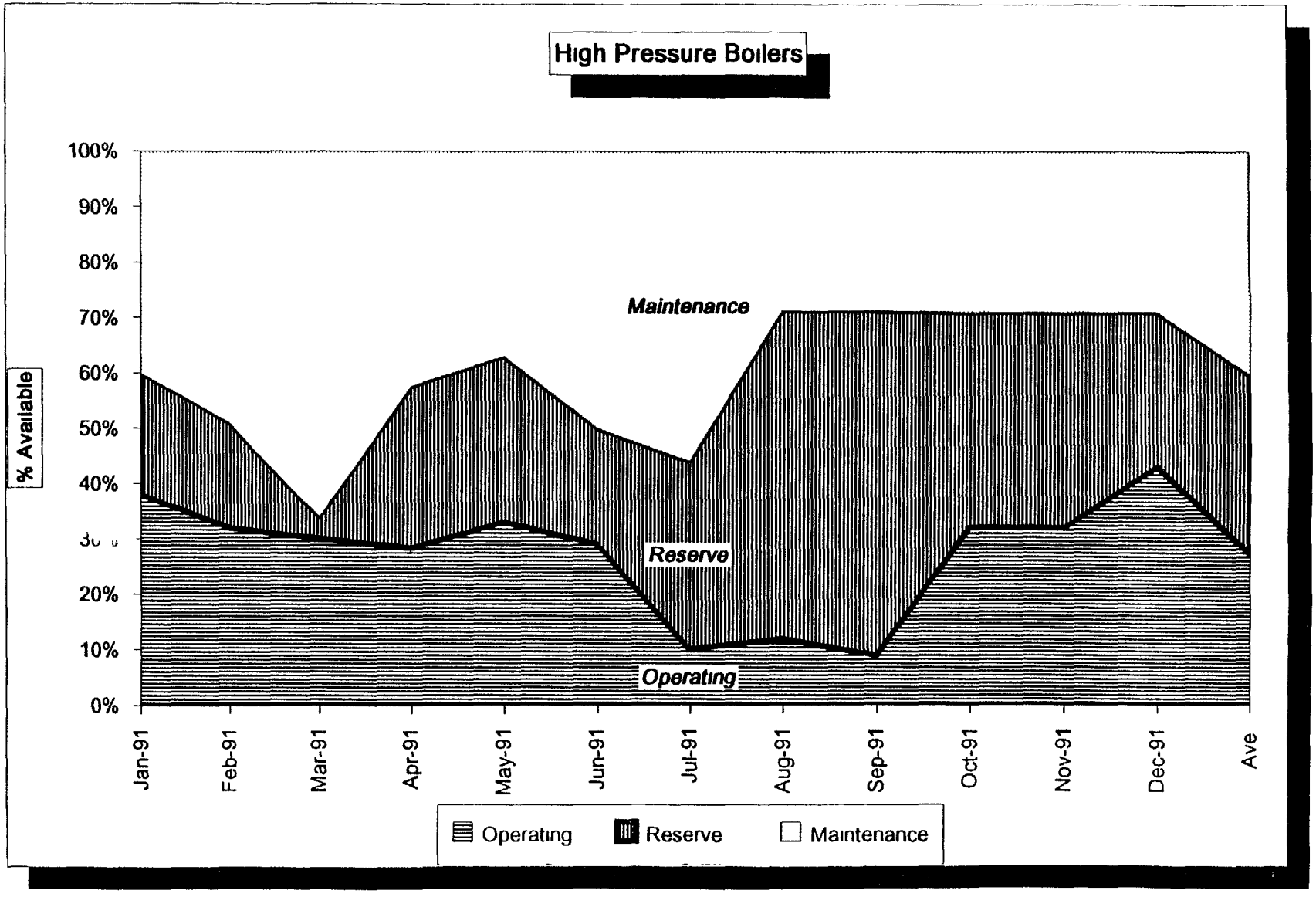
High Pressure Boilers
% Available
100%
90%
80%
70%
60%
50%
40%
30%
20%
10%
0%
Maintenance
Reserve
Operating
Jan-91
Feb-91
Mar-91
Apr-91
May-91
Jun-91
Jul-91
Aug-91
Sep-91
Oct-91
Nov-91
Dec-91
Ave
Operating
Reserve
Maintenance

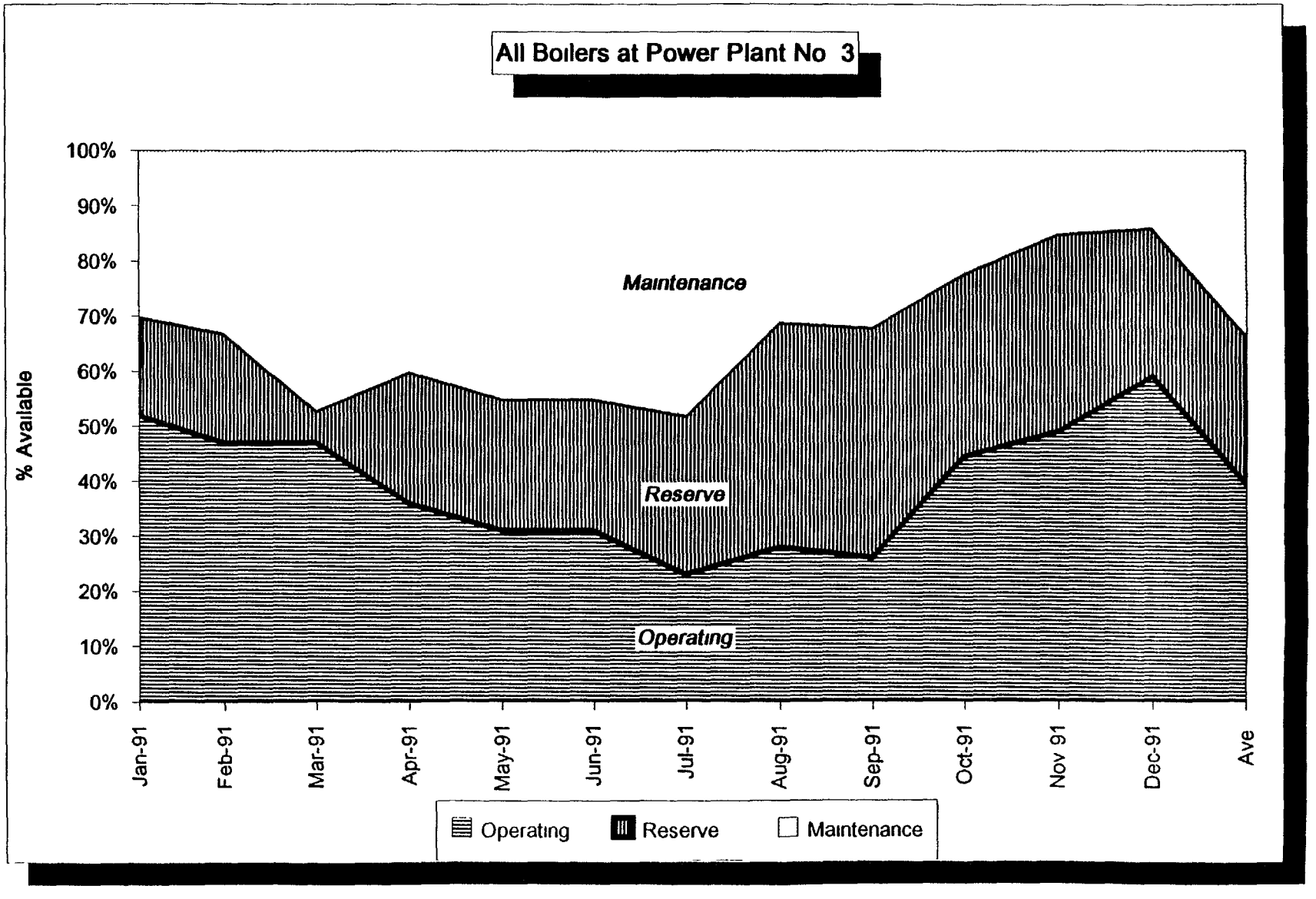
All Boilers at Power Plant No 3
% Available
100%
90%
80%
70%
60%
50%
40%
30%
20%
10%
0%
Maintenance
Reserve
Operating
Jan-91
Feb-91
Mar-91
Apr-91
May-91
Jun-91
Jul-91
Aug-91
Sep-91
Oct-91
Nov 91
Dec-91
Ave
Operating
Reserve
Maintenance

APPENDIX E

NILAKAH MINE GAS DETECTORS

## APPENDIX E

## NILAKAH MINE GAS DETECTORS

### SUMMARY

At the direction of US-AID, United Engineers and Constructors has purchased twelve portable methane/oxygen gas detectors for use by Nilakah Mine personnel A verbal Purchase Order No 7419 002-252-11 (subsequently confirmed in writing on December 9, 1992) for twelve MICROGARD™ Portable Alarms with sample pump module, batteries, battery chargers, calibration kits, and calibration gas cylinders was issued to MSA (Mine Safety Appliances Company) on December 8, 1992 in order to meet a required shipping date of December 16, 1992 Unfortunately, they did not make the air charter and, instead, were shipped via commercial air cargo, (via Russia), in early January The portable gas detectors will monitor and alarm high concentration of methane-in-air and high/low concentration of oxygen, both in the immediate vicinity of the device

### BACKGROUND

In order to protect personnel entering or working in the mine, monitoring devices to detect and alarm the presence of increasing concentrations of methane gas and/or a deficiency of oxygen are necessary The protective devices may be furnished as a fixed installation, including a microprocessor based control system with personal computer interface, for remotely monitoring the mine atmosphere, and/or as portable alarms carried or worn by individuals entering the mine

The fixed installation includes permanently mounted sensors within the mine at strategic locations with an external (to the mine) controller which includes the software and indications for remote monitoring of mine atmospheric conditions The system would be energized by available electrical power with a battery back-up system in the event of power interruption All equipment mounted within the mine would be intrinsically safe and/or contained in explosion proof housings, depending upon distance to the controller unit The primary advantage of this system is 24-hour monitoring of mine conditions using remote sensors The application of this equipment, however, requires engineered software for programming the logic controllers, an engineered installation for the sensors, and a higher level of technical expertise in the operation and maintenance of the system than that required for portable alarms The primary disadvantage of this system is its higher cost and the inflexible nature of fixed sensor locations as the mine is developed and corridors/ shafts are extended This type of system would have to be designed to accommodate future corridors and shafts
The portable alarms, which are carried by individual personnel, provide the same monitoring functions (methane gas and oxygen concentrations), but are off-the-shelf components available for immediate shipment Since the portable alarms move with personnel, they can be conveniently used as the mine is extended and are always at the location of the worker, as opposed to preset fixed sensor locations within the mine There are two primary disadvantages of the portable alarms (a) they are powered by rechargeable batteries, and (b) they enter the mine with the worker, i e , they do not monitor mine atmospheric conditions on a twenty four hour basis <u>These disadvantages mean that personnel may not be aware of a dangerous situation until it is too late</u>



80

The first disadvantage is overcome by providing adequate batteries and battery chargers to assure sufficient power for operation for the duration of an 8-hour shift New, fully charged batteries are required each time the unit is used The second disadvantage can be mitigated, but not eliminated, by recognizing the limits of the device and training personnel to enter the mine in a cautious manner, allowing the unit sufficient time to respond to off-normal or alarm conditions

The need to provide a modicum of safety in a timely manner as directed by AID precluded the delay which would be necessary for purchasing and installing an engineered fixed system, UE&C's initial focus The portable alarms will provide a higher degree of safety than currently exists, but we recommend the future installation of a fixed system with appropriate allowances to accommodate the extension of the mine corridors/shafts

Telephone communication with personnel at the site has indicated that the current mine conditions include a methane-in-air concentration greater than 2% and that the ventilation fans are inoperative The condition of the ventilation fans is confirmed in a report written by Mr P McCandless, dated October 30, 1992, page 1, Item 3 ), as follows

> 3 ) Regarding ventilation fans, there are two, one of which normally runs, and one that is for stand-by They are the same size fans, and are rated to circulate three thousand cubic meters per second of air The "clean" air is pushed down into the mine using the vent piping, and is exhausted out the shaft as "dirty" air Presently, both fans are "down " I do not have the figure for the static pressure on these fans, but will try and call the ministry this AM, and include that with this letter (Vent pipe needs 2000m x 600mm immediate and 4000m x 600mm by year end) It is believed that this pipe is "blower bag "

If the methane-in-air concentration is greater than 2%, as stated, the portable monitors will be in "constant" alarm, as the factory preset limit for warning personnel is 2% With this scenario, the monitors will, at best, only indicate the methane-in-air concentration, up to a maximum range of 5%, but without the benefit of an effective warning alarm due to a change/further increase of the methane-in-air concentration The need to repair/correct the fans and/or motor drives, ventilation ducts, and dampers to improve fresh air flow is, therefore, imperative Further, we have been advised, verbally, of the existence of three active fires in the mine No degree of monitoring will, of itself, improve personnel safety under these operating conditions

**OPERATION - Portable Alarms**

It is intended that each individual "wear" or carry a MICROGARD portable alarm when entering and/or working in the mine The portable alarm device must be totally exposed to the mine atmospheric conditions at all times, i e, totally uncovered, to afford reliable and responsive monitoring of the methane and oxygen concentrations Calibration of each portable alarm device should be checked on a regular basis in accordance with MSA recommendations, preferably each time the unit is used The portable alarm is limited to monitoring only the immediate vicinity around the individual

> **CAUTION** The MICROGARD portable alarm does not have the capacity, nor is its purpose by design or use, intended to provide alarms or indication of mine conditions in advance of the individual wearing the device



81

The MICROGARD portable alarm will provide an audible alarm and visual indication of the following conditions

- An increase in the concentration of methane-in-air (by volume) to 2 % or more
- A decrease in the concentration of oxygen (as measured by the partial pressure of oxygen) to 19 5% or less
- An increase in the concentration of oxygen (as measured by the partial pressure of oxygen) to 23 5% or more
- Sensor failure (if the monitor indicates methane concentrations less than zero)
- Out-of-range concentration of methane-in-air greater than 5%
- Low battery condition

**NOTE** All alarm limits for gas concentrations noted above are preset at the factory

**PERIPHERAL EQUIPMENT**

The following peripheral components are provided (along with the twelve portable units) to improve the monitoring functions of the portable alarm units

- An earphone for high noise locations
- An integral plug-in pump module to aspirate the sample to the sensing element and improve speed of response
- (24) spare rechargeable Nicad (nickel-cadmium) battery packs to assure twenty-four hour availability
- (12) battery chargers
- (2) calibration check kits
- (12) 95-liter bottles of 2 5% methane-in-air calibration gas

**PERFORMANCE CHARACTERISTICS**

- ACCURACY ±0 5% oxygen @ temperature range 0-40 °C
  ±0 3% methane
- RANGES Oxygen 1 - 25%
  Methane-in-air 0 - 5%



82

**NOTE** The Lower Explosion Limit (LEL) of methane-in-air is 5% The factory preset alarm for methane-in-air at 2% is 40% of the LEL value

- RESPONSE TIME Oxygen 90% of final reading in 10 seconds at temperature range of 0-40 °C
  Methane 90% of final reading in 8 seconds

- OPERATING TIME
  8-10 hours nominal continuous usage at temperature range of 0-40 °C with fully charged Nicad battery



83

# APPENDIX F

# INSTRUMENTATION AND CONTROL DRAWINGS

APPENDIX F

DRAWINGS

DRAWING LIST

Instrumentation and Control

| | |
|---|---|
| PULVER | Pulverizer & Feeder Arrangement |
| PULVER 2 | Pulverizer Fan Arrangement |
| IC-10-03 | Pulverizer Air Temp Logic |
| IC-11-02 | Pulverizer Air Flow Write Up |
| IC-12-01 | Control Board Area |
| IC-13-02 | Pulverizer Pressure Control |
| IC-14-01 | Pulverizer Pressure Control Write Up |
| IC-15-01 | HP Pulverizer Feeder |
| IC-16-01 | LP Pulverizer Feeder |
| IC-17-01 | Burner Scanner |
| IC-18-Sh 1 | HP Boilers Scanner Cabinets Sh 1 of 2 |
| IC-18-Sh 2 | HP Boilers Scanner Cabinets Sh 2 of 2 |
| IC-19 | High Pressure Boiler Control Room Cabinets & Racks |
| IC-20 Sh 1 | HP Controller Arrangement |
| IC-20 Sh 2 | HP Controller Arrangement |
| IC-21 | LP Controller Arrangement |

Mechanical

| | |
|---|---|
| M-001 | HP Plant<br>Boiler Flame Scanner Cooling Air Piping<br>Plan at Elevation 9600 |
| M-002 | HP Plant<br>Boiler Flame Scanner Cooling Air Piping<br>Section Looking East |

Electrical

| | |
|---|---|
| E-001 | Pulverizer Damper Controls<br>Block & Elementary Diagrams |
| E-002 | High Pressure Pulverizer Damper Controls<br>Wiring Diagram |
| E-003 | Low Pressure Pulverizer Damper Controls<br>Wiring Diagram |
| E-004 | High Pressure Pulverizer Damper Controls<br>Mounting Configuration |

***Mongolian Peoples Republic***
***Energy Ministry***
***Ulan Batar Mongolia***

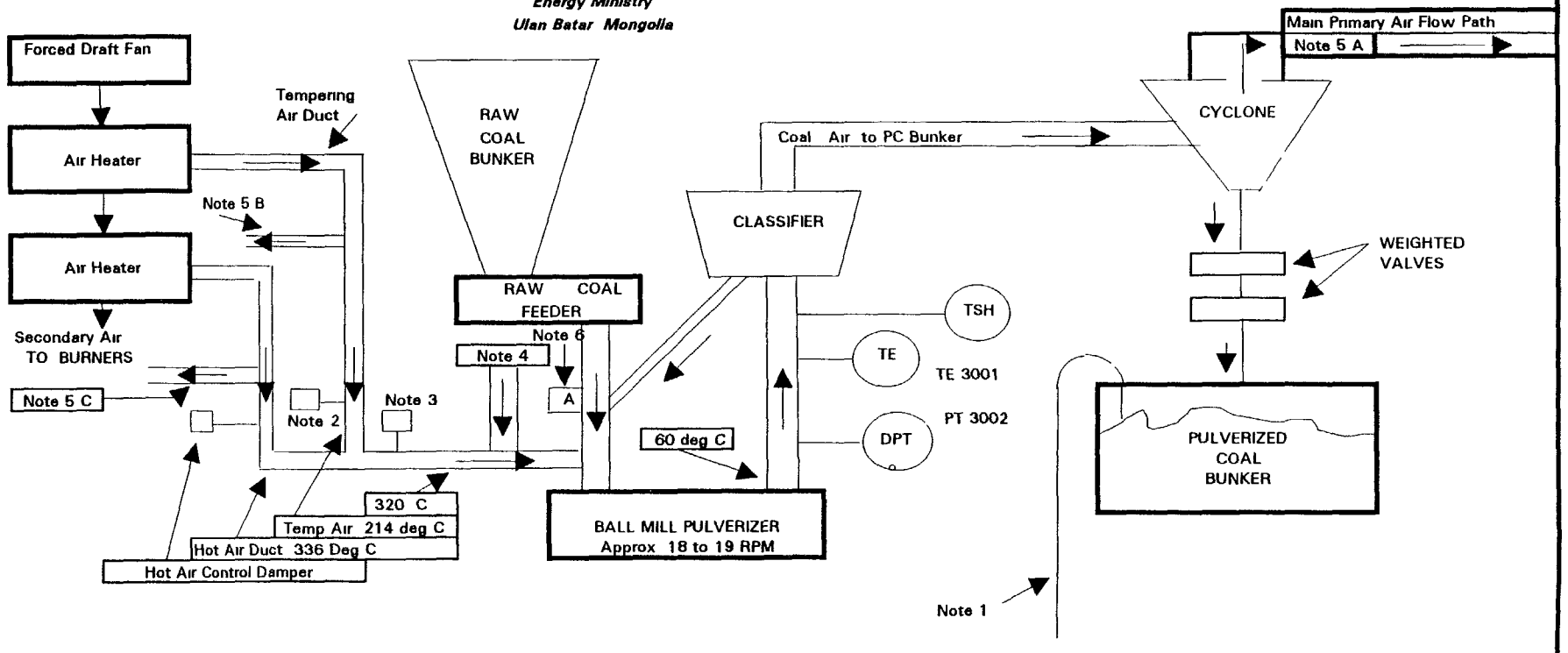


**United Engineers & Constructors**
A Raytheon Company
100 Summer Street Boston MA 02110

Note 1 A weight on the end of a rope is used to measure the level of coal in the bunker once each hour
Note 2 Tempering Air Control Damper
Note 3 Flow Control Damper (Low Pressure Boilers have a manual damper)
Note 4 Valve which will open when the pulverizer is shut down Permits plant air to enter the pulverizer
Note 5 Air will be going to the Pulverizer Air Fan
Note 6 Adding a NO coal alarm (Current system does not have an a NO coal alarm)

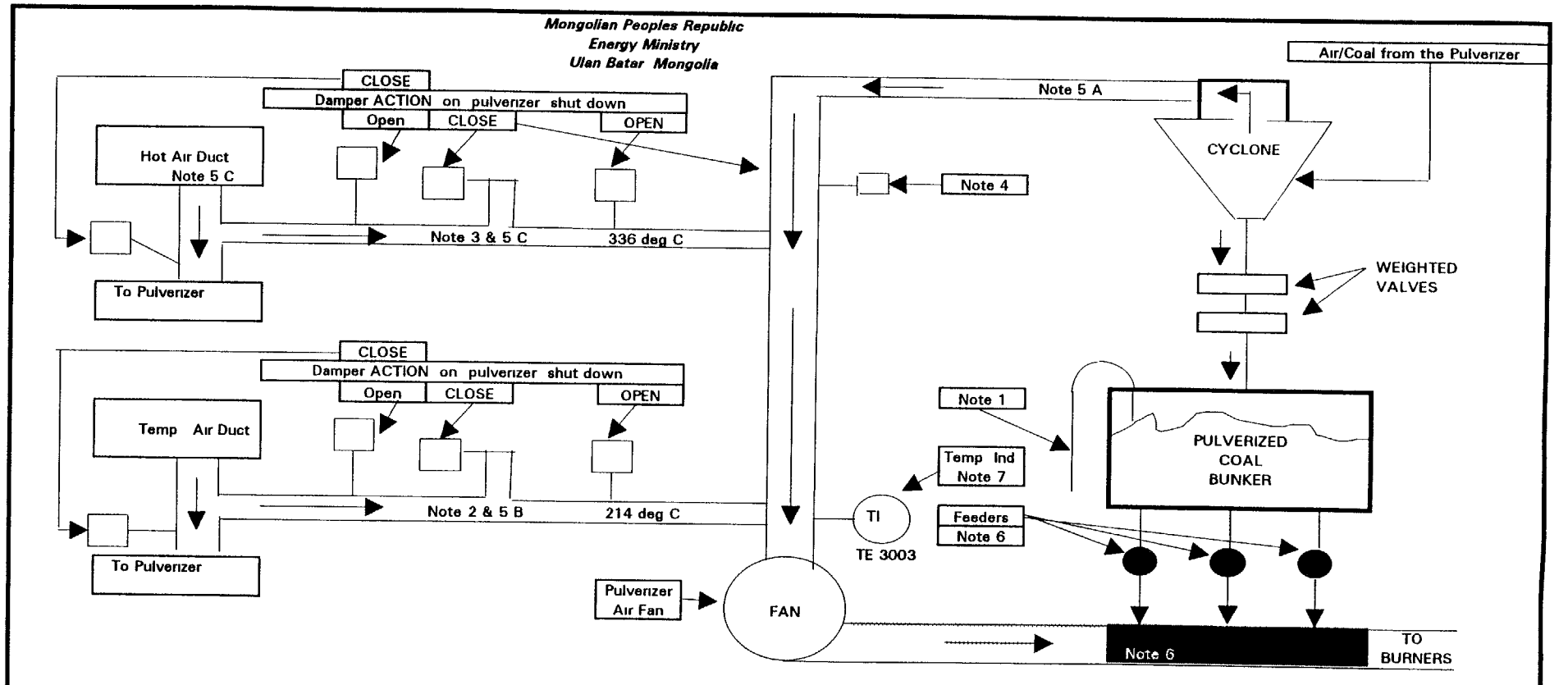


**United Engineers & Constructors**
A Raytheon Company
100 Summer Street Boston MA 02110

Note 1 A weight on the end of a rope is used to measure the level of coal in the bunker each hour
Note 2 Tempering Air Duct
Note 3 Hot Air Duct
Note 4 Valve which will close when the pulverizer is not in service to isolate it
Note 5 Air will be going to the Pulverizer Air Fan
Note 6 Each feeder supplies a separate pipe going to a burner
Note 7 NEW remote temperature indicator to be located on the control board TE 3003

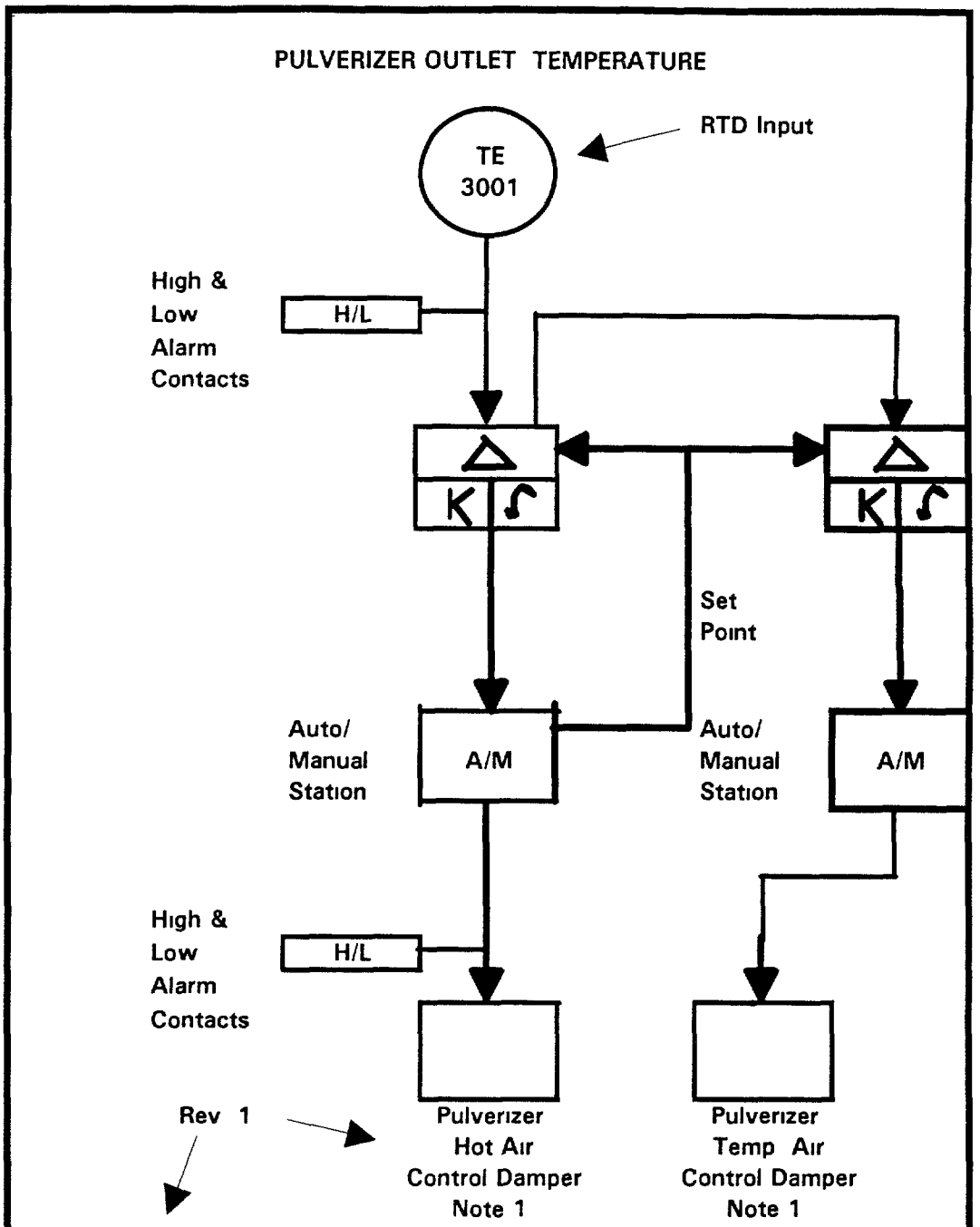


Note 1 A pulse signal to open and a second pulse signal to close shall be required
The 24 Volt DC signal will drive a relay to open or close the damper

| |
|---|
| Mongolian Energy Ministry<br>Critical Spare Parts |
| **PULVERIZER**<br>**Air Temp Logic** |
| Dwg No<br>**7419-001-IC-10 -03** |



88

## PULVERIZER AIR TEMP WRITE UP

1 The type of pulverizer being controlled is a ball mill
2 This controller will replace current solid state devices
3 Controllers are for eighteen pulverizers

4 High and low alarm output contacts shall be available on the input signal and hot air damper output signal
5 Each of the six high pressure boilers have two pulverizers
Each pulverizer will be independent of the other
6 Each of the six low pressure boilers have one pulverizer
7 The controller shall maintain the mill outlet temperature based on a manual set point
8 The logic as shown will require two controllers

9 Panel insert Notes on area available
Low Pressure Boilers have space available on a common section of the board for a pulverizer from for two different boilers
High Pressure Boilers will have an rack assembly

10 Note the input and the output signals as shown on the control loop drawing
11 The controller shall be capable of being reprogrammed at the job site The controller offered shall have logic to create a function generator, for each output, if required
12 The pulverizer hot air damper shall open (if in auto) as the pulverizer outlet temperature decreases
The operator shall be able to drive the hot air damper open or closed in manual
13 The pulverizer temp air damper shall close (if in auto) as the pulverizer outlet temperature decreases
The operator shall be able to drive the temp air damper open or closed in manual This willl permit the operator to adjust the temperature for one of four types of coal being fired

| |
|---|
| Mongolian Energy Ministry<br>Critical Spare Parts |
| **PULVERIZER**<br>**Air Flow Write-Up** |
| Dwg No<br>**7419-001-IC-11-02** |

Controls for two (2) pulverizers will be located within this area

500 mm

470 mm

***Low Pressure Boilers***

This section is common for two boilers

All dimensions are in millimeters

Controls for two (2) pulverizers will be located within this area

290 mm

200 mm

***High Pressure Boilers***

This section is common for two boilers

Panel depth is 303 mm

All dimensions are in millimeters

| |
|---|
| Mongolian Energy Ministry<br>Critical Spare Parts |
| **CONTROL BOARD AREA** |
| Dwg No<br>**7419-001-IC-12-01** |

PULVERIZER OUTLET PRESSURE

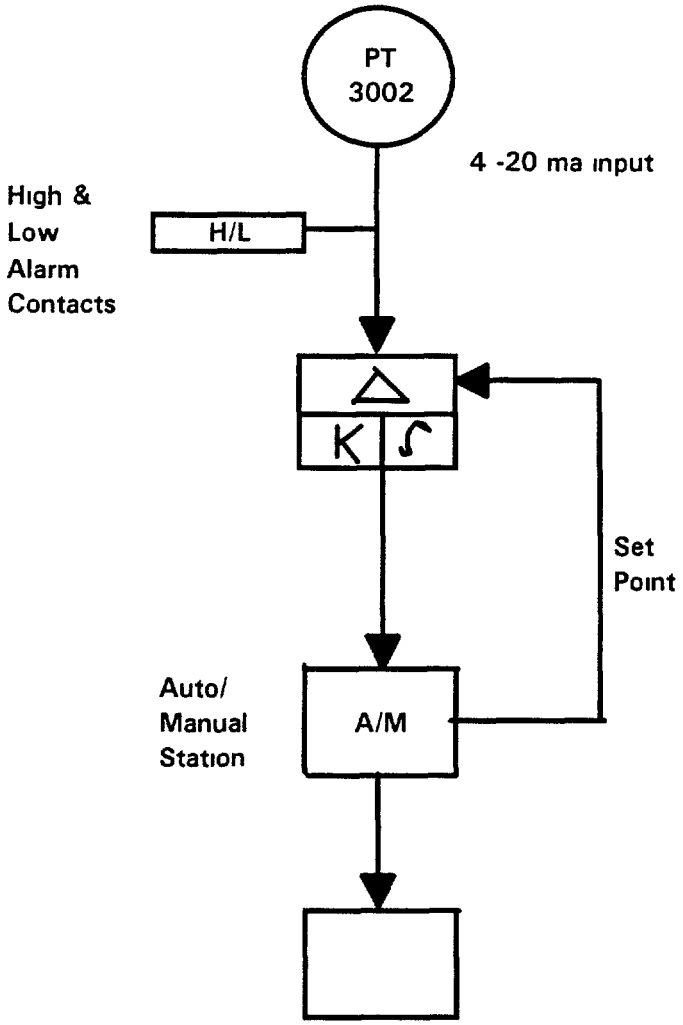


Pressure Control Damper
Note 1

Rev 1

Note 1 The output signal to the control damper will be 4-20 ma for the low pressure boilers
The output signal to the control damper will be 24 VDC pulse signal (1each for open & close) for the high pressure boilers

| |
|---|
| Mongolian Energy Ministry<br>Critical Spare Parts |
| **PULVERIZER**<br>**Pressure Control** |
| Dwg No<br>**7419-001-IC-13 -02** |

## PULVERIZER OUTLET PRESSURE CONTROL WRITE UP

1 The type of pulverizer being controlled is a ball mill
2 This controller will replace current solid state devices
3 Controllers are for twelve pulverizers with an option for an additional six pulverizers
4 High and low alarm output contacts shall be available on the input signal and hot air damper output signal
5 Each of the six high pressure boilers have two pulverizers Each pulverizer will be independent of the other
6 Each of the six low pressure boilers have one pulverizer
7 The controller shall maintain the mill outlet pressure based on a manual set point
8 The logic shown may require more then one controller, the Seller shall furnish all hardware and software required to complete the logic
9 Panel insert Notes on area available
Low Pressure Boilers have space available on a common section of the board for a pulverizer from for two different boilers
High Pressure Boilers have space available for the two pulverizers on that boiler
10 Note the input and the output signals as shown on the control loop drawing
11 The controller shall be capable of being reprogrammed at the job site The controller offered shall have logic to create a function generator, for each output, if required
12 The pulverizer air control damper shall open (if in auto) as the outlet pressure decreases

| |
|---|
| Mongolian Energy Ministry<br>Critical Spare Parts |
| **PULVERIZER**<br>**Pressure Control Write-Up** |
| Dwg No<br>**7419-001-IC-14-01** |



92

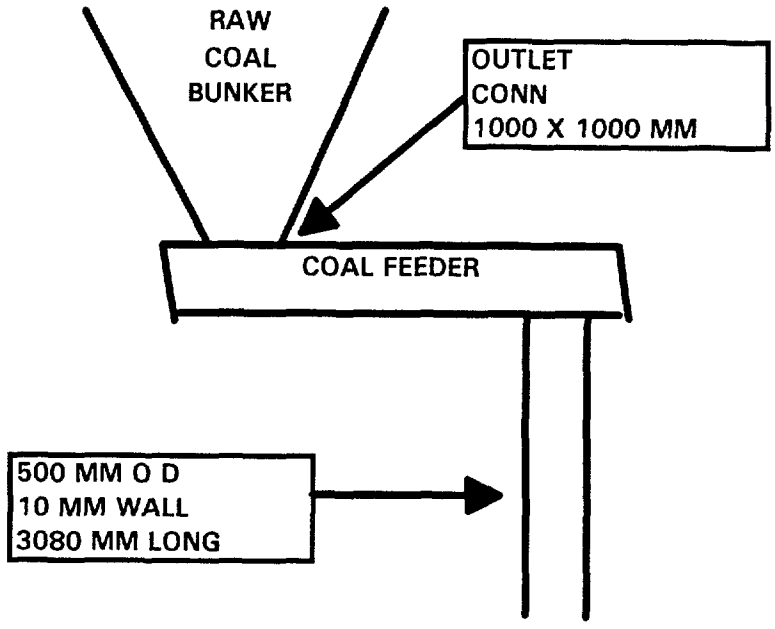


HIGH PRESSURE BOILERS

| |
|---|
| Mongolian Energy Ministry<br>Critical Spare Parts |
| HP PULVERIZER<br>FEEDER |
| Dwg No<br>7419-001-IC-15-01 |

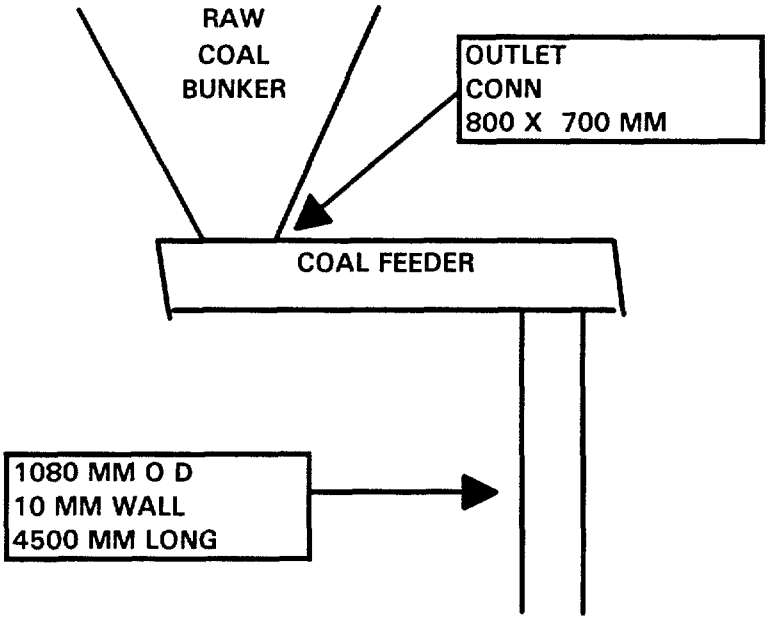


LOW PRESSURE BOILERS

| |
|---|
| Mongolian Energy Ministry<br>Critical Spare Parts |
| LP PULVERIZER<br>FEEDER |
| Dwg No<br>7419-001-IC-16-01 |

Notes

**Complete mounting hardware will be required**

It is very difficult to obtain materials in Mongolia

All required pipe nipples and fittings shall be furnished

The vendor may advise of improvements to the sketch below

This is what we require the vendor to furnish

One scanner assembly is shown below

The coal nozzle is located at the burner center

The burner does NOT have any obstructions

The seller shall furnish an oversized pipe to retain the insulation and not block the scanner Seller shall furnish a pipe size as required to permit viewing (Item #1)

The purpose of the lens is to protect the scanners on loss of both scanner cooling air fans (Item #6)

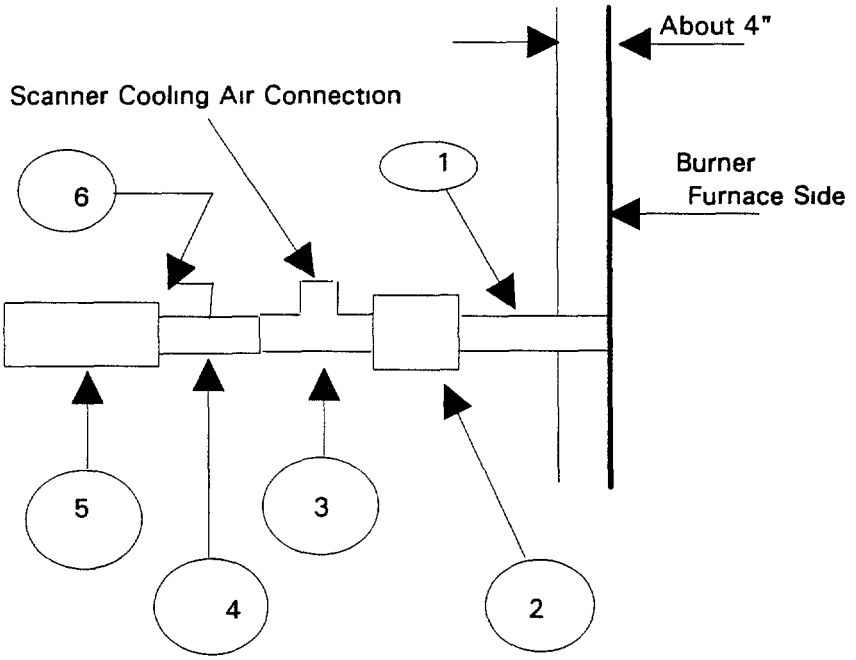


**HIGH PRESSURE BOILERS**
**Six Burners per Boiler**

6 Heat resistance lens
5 Scanner
4 Ball Valve
3 Tee for the scanner cooling air connection
2 Swivel Mount
1 Pipe one foot long (304 8 mm)

| |
|---|
| Mongolian Energy Ministry<br>Critical Spare Parts |
| **BURNER SCANNER** |
| Dwg No<br>**7419-001-IC-17-01** |

## HIGH PRESSURE BOILERS
Scanner Cabinet

1 One cabinet will be required each each of the two control rooms
2 The scanner cabinets shall be NEMA 12
3 Will be located against a wall, front access will be required
4 Mount all amplifiers, power supplies etc within the cabinet
5 Mount the meter, lights & horn on the cabinet door
These devices shall be grouped per boiler
6 Furnish all power supplies required
7 Please note that one cabinet will control four boilers
and the second cabinet will control only three boilers
8 The scanners shall be used for indication only
9 A switch on the cabinet, shall be available to stop the alarm
on boilers out of service
10 The scanner fans shall be started and shutdown at the fan
A light shall appear on EACH panel to indicate that these fans
are in service and pressure is proven The required logic
shall be included with the fan start logic
A second light shall indicate that the second fan has started
A reset button may be used to clear these signals
Each control room shall be provided with fan status lights
as indicated above, loss of pressure, fan or auto fan
start shall be alarmed
11 Please note that the location makes it difficult to obtain materials
Therefore, all required fittings shall be furnished
12 The vendor shall wire all devices to terminal strips
13 Cabinet shall include the following features
Free standing cabinet
Door with handle and three point latch
Lock with four keys
Light mounted within the cabinet, 220 VAC
Color of the cabinet shall be gray

Two (2) cabinets will be required
One cabinet for each control room

| | Control Room | |
|---|---|---|
| Room # | 1 | 2 |
| Boiler No | 7 | 10 |
| Boiler No | 8 | 11 |
| Boiler No | 9 | 12 |
| Boiler No | --------- | 13 |

Mongolian Energy Ministry
Critical Spare Parts

HP Boilers
**SCANNER**
**Cabinets**
Sheet 1 of 2

Dwg No
**7419-001-IC-18-01**



9b

## HIGH PRESSURE BOILERS
Scanner Cabinet

14 Logic shall be furnished to maintain each light on when an alarm should occurred and until the reset button is depressed

15 A no coal flow alarm and light shall be required
The no coal alarm device is not part of this order
Two (2) no coal alarms will be required per boiler

16 Items mounted on the cabinet door for EACH boiler
The following devices are a minimum number

(6) Flame On Lights
(6) Flame Off Lights
(6) Flame Meters
(1) Coal Flow to Pulverizer
(1) No Coal Flow to Pulverizer
(1) Alarm Silence
(1) Reset button
(1) Switch to turn off alarms - Boiler Out of Service
(1) Switch to turn off alarms - Feeder Out of Service

Common lights & Switch - one set per cabinet
(1) Scanner Cooling Air Fan A On
(1) Scanner Cooling Air Fan A Off
(1) Scanner Cooling Air Fan B On
(1) Scanner Cooling Air Fan B Off
(1) Fan Running and Pressure Not Correct
(1) Auto Fan Start
(1) Fan Alarm Reset

Two (2) cabinets will be required
One cabinet for each control room

| | Control Room | |
|---|---|---|
| Room # | 1 | 2 |
| Boiler No | 7 | 10 |
| Boiler No | 8 | 11 |
| Boiler No | 9 | 12 |
| Boiler No | --------- | 13 |

Mongolian Energy Ministry
Critical Spare Parts

**SCANNER**
**Cabinet**
Sheet 2 of 2

Dwg No
**7419-001-IC-18**

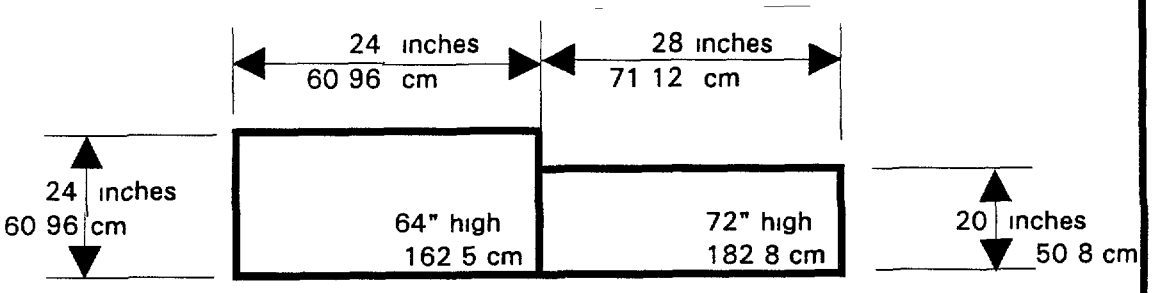


Scanner Cabinet

Rack for field mounting the Moore hardware

The above cabinets will be located in each of the two High Pressure Boiler Control Rooms

The Moore Rack will require some field wiring between the power supply and controllers The pulse output from the controller will have to be wired to a interposing relay

The scanner cabinet is limited to front access only

| |
|---|
| Mongolian Energy Ministry<br>Critical Spare Parts |
| **High Pressure Boiler Control Rooms**<br>Cabinets & Racks |
| Dwg No<br>**7419-001-IC-19-01** |

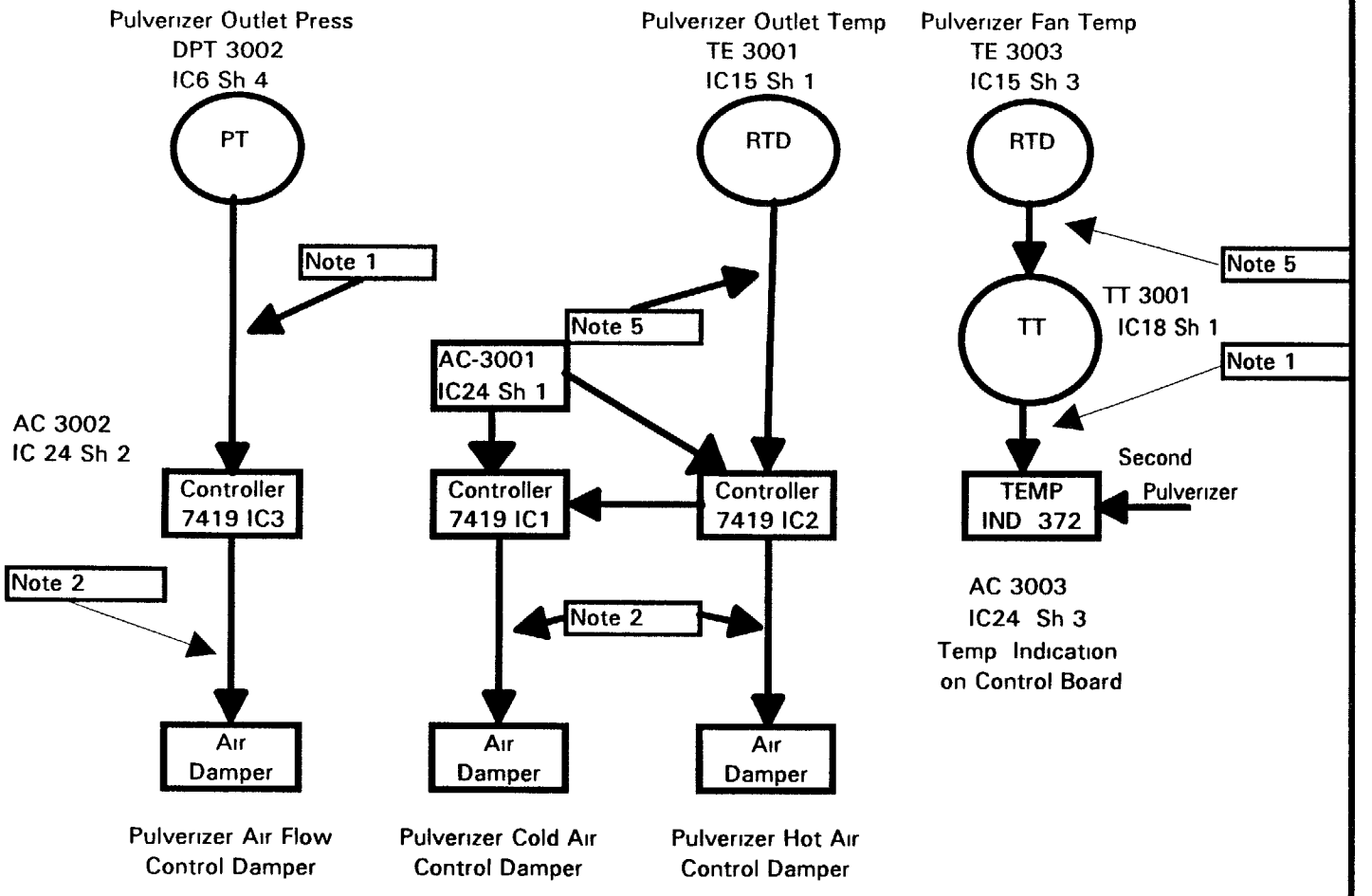


Notes ***The ABOVE logic is for one pulverizer***

1 A 4-20 ma Signal
2 Two pulse signals (one to open & one to close)
3 Not Used
4 Not Used
5 RTD Input Signal
6 A low pressure boiler will have one pulverizer
7 A high pressure boiler will have two pulverizers

| |
|---|
| Mongolian Energy Ministry<br>Critical Spare Parts |
| High Pressure Boilers<br>**CONTROLLER ARRANGMENT**<br>Sheet 1 of 2 |
| Dwg No<br>**7419-001-IC-20** |

High Pressure Boilers
Controller Arrangement

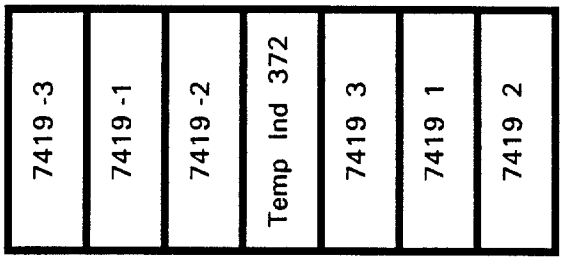


Each boiler will have all of the above
The rack in each HP Control Room
will have three shelves as shown above

7419-3 Controller for the Pulverizer Pressure
7419-1 Controller for the Temp Controller with an RTD input and signal to the Hot Air Damper
7419-2 Controller for the Temp Controller signal to the Temp Air Damper
372 Temperature Indicator for the Pulverizer Fan Outlet Temp The indicator shows two temperatures, one for each pulverizer

The controllers are then repeated for the second pulverizer

**The controllers will be shipped with these tag numbers and will be programmed**

| |
|---|
| Mongolian Energy Ministry<br>Critical Spare Parts |
| High Pressure Boilers<br>**CONTROLLER ARRANGEMENT**<br>Sheet 2 of 2 |
| Dwg No<br>**7419-001-IC-20** |

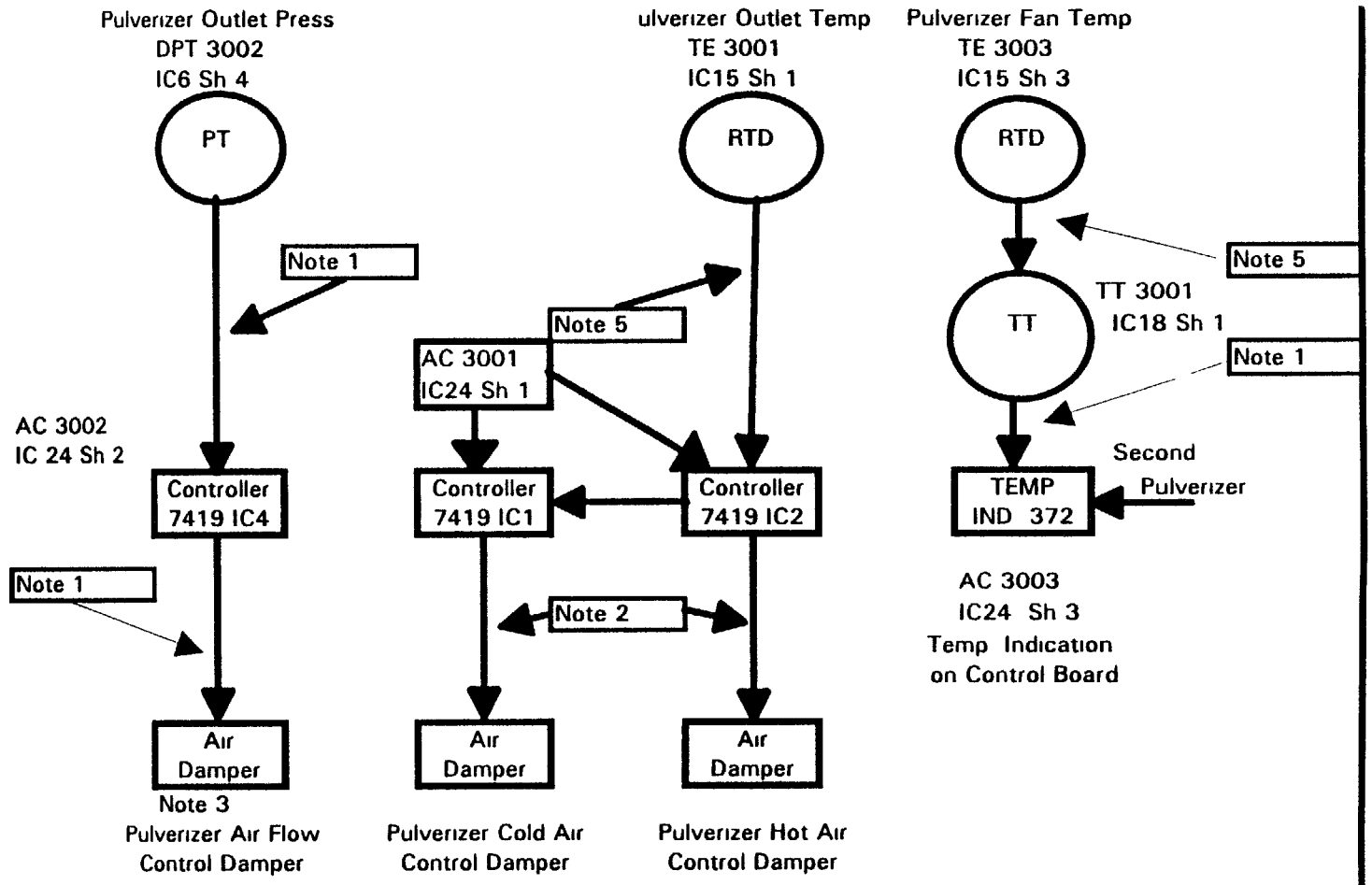


Notes ***The ABOVE logic is for one pulverizer***

1. A 4 20 ma Signal
2. Two pulse signals (one to open & one to close)
3. New damper drives are being purchased for the six low pressure pulverizers
4. Not Used
5. RTD Input Signal
6. A low pressure boiler will have one pulverizer
7. A high pressure boiler will have two pulverizers

| |
|---|
| Mongolian Energy Ministry<br>Critical Spare Parts |
| Low Pressure Boilers<br>**CONTROLLER ARRANGMENT** |
| Dwg No<br>**7419-001-IC-21** |