PD-ABP-633

U.S AGENCY FOR INTERNATIONAL DEVELOPMENT PROJECT DATA SHEET	1. TRANSACTION CODE A = Add B = Change [B] C = Delete Amendment Number 3 (95269)	DOCUMENT CODE 3
2. COUNTRY/ENTITY Uganda	3. PROJECT NUMBER [617-0114]	
4. BUREAU/OFFICE USAID/Uganda	5. PROJECT TITLE *(maximum 40 characters)* [Agricultural Non-Traditional Export Promotion Program]	
6. PROJECT ASSISTANCE COMPLETION DATE (PACD) 12/31/98	7. ESTIMATED DATE OF OBLIGATION *(Under 'B,' below, enter 1,2,3, or 4)* A.Initial FY 92 B.Quarter __ C.Final FY 97	

8. COSTS ($000 OR EQUIVALENT $1 =)

A. FUNDING SOURCE		FIRST FY 92			LIFE OF PROJECT		
		B. FX	C. L/C	D. TOTAL	E. FX	F. L/C	G. TOTAL
AID Appropriated Total							
(Grant)		(2,500)	( )	(2,500)	(13,300)	( )	(13,300)
(Loan)		( )	( )	( )	( )	( )	( )
Other U.S.	1.						
	2.						
Host Country						6,650	6,650
Other Donor(s)							
TOTALS ⇒		2,500		2,500	13,300	6,650	19,950

9. SCHEDULE OF AID FUNDING ($000)

A.APPRO-PRIATION	B.PRIMARY PURPOSE CODE	C. PRIMARY TECHNICAL CODE		D. OBLIGATIONS TO DATE		E. AMOUNT APPROVED THIS ACTION		F. LIFE OF PROJECT	
		1.Grant	2.Loan	1. Grant	2. Loan	1. Grant	2. Loan	1. Grant	2. Loan
(1) DFA				7,500		3,800		13,300	
(2)									
(3)									
(4)									
			TOTALS ⇒	7,500		3,800		13,300	

10. SECONDARY TECHNICAL CODES *(maximum 6 codes of 3 positions each)*						11. SECONDARY PURPOSE CODE	
12. SPECIAL CONCERNS CODES *(maximum 7 codes of 4 positions each)*							
A. Code							
B. Amount							

13. PROJECT PURPOSE *(maximum 480 characters)*

To increase the range and value of non-traditional exports by resolving public and private sector constraints to export promotion

14. SCHEDULED EVALUATIONS	MM	YY		MM	YY		MM	YY	15. SOURCE/ORIGIN OF GOODS AND SERVICES			
Interim						Final	10	98	__ 000	__ 941	__ Local	x Other (Specify) 935

16. AMENDMENTS/NATURE OF CHANGE PROPOSED *(This is page 1 of a ___ page PP Amendment)*

This amendment increases Life of Project funding by $5,800,000, modifies activities under existing project components and adds a post harvest handling and storage component. The PACD is extended by three years, to December 31, 1998

17. APPROVED BY	Signature Donald B. Clark Title Mission Director	Date Signed MM DD YY 08 02 95	18. DATE DOCUMENT RECEIVED IN USAID/W, OR FOR USAID/W DOCUMENTS, DATE OF DISTRIBUTION MM DD YY

I have reviewed and hereby approve the methods of implementation and financing in this Project Paper: _____
/CONTROLLER

AM 95-37

ACTION MEMORANDUM FOR THE MISSION DIRECTOR, USAID/UGANDA

FROM: Gary Bayer, Chief, Agriculture and Natural Resources

SUBJECT: Agricultural Non-Traditional Export Promotion Project, 617-0114, Project Paper Amendment No. 3

Problem: You are requested to approve an amendment to the Agricultural Non-Traditional Export Promotion (ANEP) Project that adds a post harvest handling and storage activity, modifies several other components, increases Life-of-Project (LOP) funding by $5.8 million to a new total of $13.3 million, and extends the Project Assistance Completion Date (PACD) by three years to December 31, 1998.

Discussion:

The Agricultural Non-Traditional Export Promotion (ANEP) Project (617-0114) was authorized on September 29, 1992, with Life-of-Project funding of $2.5 million and a Project Assistance Completion Date (PACD) of March 31, 1995. The project was amended in August 1993, increasing LOP funding by $1 million and adding new activities. The second amendment in August 1994 increased LOP funding by $4 million to extend funding of the Export Policy Analysis Unit (EPAU), one year of additional funding for the Uganda Investment Authority (UIA), and to add a venture capital component. The project provides technical assistance, training and other forms of support to organizations involved in export development and complements the export policy reforms receiving non-project assistance (NPA) under the Agricultural Non-Traditional Export Promotion Program (ANEPP; 617-0113). The purpose of both the project and the NPA program is "to increase the range and value of non-traditional exports by resolving public and private sector constraints to export promotion."

Both components of ANEPP (NPA and project assistance) were evaluated in October 1993. The evaluators stated that:

> "ANEPP has had a positive impact on the Ugandan economy both in terms of increasing income and increasing foreign exchange earnings. The evaluation team is confident that the approach taken is correct noting that the development of NTAEs takes

time.... But policy changes and the development of a NTAE knowledge base have occurred; these developments are setting the foundation for future growth in the sector."

One of the evaluators, from REDSO, during two Spring 1995 TDYs in this re-design process, recommended that EPAU continue its analysis to resolve agriculture sector-specific regulatory and policy constraints.

Purpose and Rationale for the Amendment The purpose of this third project amendment is to increase LOP funding by $5.8 million to provide resources for 1) a Post Harvest Handling and Storage (PHHS) component to be housed at Kawanda Agricultural Research Institute (KARI); 2) additional support to the Development Finance Corporation of Uganda (DFCU) in venture capital financing; 3) partial funding of the mission's proposed grant to Volunteers in Cooperative Assistance (VOCA) for short-term technical assistance to NTAEs, and continued funding for the FSN/PSC project assistant.

Now that the Investment in Developing Export Agriculture (IDEA) Project is under implementation, the need has been identified for an additional component to round out the mission's NTAE program. Post harvest handling and storage losses of maize and beans amount to 16 percent of total production in Uganda. The technology for improvements in this area already exists. The mission wishes to add a PHHS component to ANEPP to place a long-term advisor at KARI, and provide training and other short term technical assistance and commodities to address the problem. Because of the continuing need for research and analysis in policy and regulatory constraints to growth in the agriculture export sector, this amendment approves three additional years of continued support for EPAU's Ugandan staff and operational expenses from existing project funds.

Mission Review of the PP Amendment
A mission review of the PP amendment was held on May 12, 1995. The review was attended by the Director and representatives of the ANR, PPD, CONT, ECON, EXO, and REDSO offices. That draft PP amendment contained a proposal to expand the project by several new components and add $13.5 million to make a new LOP total of $20 million. The recommended restructuring of the project was the product of two mission meetings which included Ugandan potential participants, and the draft project paper was developed by ten consultants. Subsequently, it was agreed to add only $5.8 million and add one new component and provide additional resources for existing components.

There were several substantive issues identified at the meeting. The consensus of the participants was that one component, for Agriculture Export Promotion services and support to the not-yet operational Uganda Export Promotion Board (UEPB), be dropped. There was general agreement (with current development thinking) that it is not useful for USAID to finance new parastatal entities. It was pointed out that the IDEA project was designed to provide market information and advice to producers of NTAEs that the mission had determined would yield the greatest impact given limited resources. Likely

B

OYB cuts, the need to ensure efficiency of increasingly scarce resources, and the existence of the GOU's cess on imports as a source of funding for UEPB, led to a decision not to fund export promotion activities at this time.

A component for Food Security/Early Warning activities with Ministry of Agriculture, Animal Industries and Fisheries (MAAIF) was judged to be too expensive ($3.0 million) to undertake with current anticipated OYB levels. Uganda, as the major food producer for export in the region, is able to deal with pockets of food insecurity within the country. Although beneficial to the Greater Horn of Africa region, the capability to feed data on harvests to the region was not judged to merit the high price, nor could sustainability be foreseen. It was decided that the mission would request funding from USAID/W or the regional FEWS III project in order to have some participation in regional food security/early warning activities. This activity will be examined in the future if funding levels permit. (No outside funding has been identified for this purpose).

Considerable discussion took place over the possible overlap or duplication of effort of the new PRESTO project at alleviating regulatory and policy constraints to growth in the private sector. The need for EPAU to continue policy analysis was debated, in light of PRESTO's planned efforts at implementation of policy and regulatory reforms. The point was made that the mission has decided that the GOU has done very well with implementing a policy framework for economic growth; it is time to help enterprises move ahead. It was decided that only one "policy unit" would be funded by USAID, and the GDO and ANR offices were tasked with recommending one unit.

The following, consultation among ANR, REDSO, PPD and GDO staff resulted in a revised proposal to continue funding of EPAU for three years, with no new long term advisor, and short term T.A. provided through a buy-in or IQC.

The venture capital component in the draft PP contained a new proviso that equity financing be targeted to agricultural projects, which was rejected by the mission review group. The amount of funds proposed in the amendment was considered too small. It was later decided that at present funding levels, the mission could commit to two more years of operational expenses (up to $600,000) and some $2 million of equity funding. "Preference" for agricultural enterprises should be exercised with the USAID equity funds.

A financial analysis was carried out by ANR and PPD, which resulted in sufficient funds being identified in the existing ANEPP budget, to be supplemented with Local Currency eventually, to fully fund EPAU local costs and short term T.A. for three years. Some $250,000 of existing T.A. funding will be committed in the mission's proposed grant to VOCA.

Summary: This $5.8 million amendment provides the funding for the post harvest component, for an additional $250,000 to VOCA, for two years of the contract of the FSN project assistant, and two years of venture capital and support to DFCU.

Host Country Contribution: The GOU's contribution level prior to this amendment was $3,150,000. The GOU contributions to the PHHS component add at least another $330,000 to the project budget. The GOU and the mission have programmed $500,000 in local currency for EPAU. The GOU contribution from the World Bank loan to the National Extension Program is $3 million. This brings the total GOU contribution to $6,650,000, which is well over the required 25 percent of total project cost.

FY 95 Obligation and Congressional Notification An FY 95 obligation of $3.8 million is planned following approval of this project amendment.

Authority: Under Delegation of Authority 551, as amended, you have the authority to amend project authorizations as long as the total LOP funding does not exceed $100 million, there are no significant policy issues or waivers required that exceed your authority, the project purpose is not changed and the life-of-project does not exceed ten years. The ANEP project will be a 6.25 year project with LOP funding of $13.3 million. The project purpose is unchanged and there are no significant policy issues or waivers required.

Recommendation: That you approve this third amendment to the Agricultural Non-Traditional Export Promotion Project by signing this Action Memorandum, the Project Authorization Amendment (Attachment I) and the Project Data Sheet (Attachment II).

Approved: Donald Clark

Disapproved: _____

Date: 8/2/95

Attachments: I. Project Authorization Amendment No. 3
II. Project Data Sheet and Project Paper Amendment

Clearances:

A/CANR:JDunn	Date8/2/95
ECON:AYeboah(Draft)	Date6/8/95
A/CPPD:LDouris (Draft)	Date6/13/95
D/CONT:KLizwelicha (Draft)	Date6/12/95
PO:SFine (Draft)	Date6/8/95
RLA:SPage (Draft)	Date6/13/95
D/DIR:LDiaz (Draft)	Date6/19/95

Host Country Contribution: The GOU's contribution level prior to this amendment was $3,150,000. The GOU contributions to the PHHS component add at least another $330,000 to the project budget. The GOU and the mission have programmed $500,000 in local currency for EPAU. The GOU contribution from the World Bank loan to the National Extension Program is $3 million. This brings the total GOU contribution to $6,650,000, which is well over the required 25 percent of total project cost.

FY 95 Obligation and Congressional Notification An FY 95 obligation of $3.8 million is planned following approval of this project amendment. ~~A Congressional Notification must be submitted and expire without objection prior to the obligation of funds.~~

Authority: Under Delegation of Authority 551, as amended, you have the authority to amend project authorizations as long as the total LOP funding does not exceed $100 million, there are no significant policy issues or waivers required that exceed your authority, the project purpose is not changed and the life-of-project does not exceed ten years. The ANEP project will be a 6.25 year project with LOP funding of $13.3 million. The project purpose is unchanged and there are no significant policy issues or waivers required.

Recommendation: That you approve this third amendment to the Agricultural Non-Traditional Export Promotion Project by signing this Action Memorandum, the Project Authorization Amendment (Attachment I) and the Project Data Sheet (Attachment II).

Approved:_____

Disapproved:_____

Date:_____

Attachments: I. Project Authorization Amendment No. 3
II. Project Data Sheet and Project Paper Amendment

Clearances:
C/ANR:GBayer ____ Date 6/8/95
ECON:AYeboah ____ Date 6/8/95
A/CPPD:LDouris ____ Date 6-13-95
MFO Pol D/CONT:KLizwelicha ____ Date 6/12/95
PO:SFine ____ Date 6/8/95
RLA:SPage (Draft) Date 6/13/95 6/13/95
D/DIR:LDiaz ____ Date 6/19/95

THIRD AMENDMENT TO THE PROJECT AUTHORIZATION

Country: Uganda

Project Name: Agricultural Non-Traditional Export Promotion Program (ANEPP) Project Component

Project No: 617-0114

1. Pursuant to Section 496 of the Foreign Assistance Act of 1961, as amended, the Agricultural Non-Traditional Export Promotion Program (ANEPP) project component for Uganda (the "Cooperating Country") was authorized on September 29, 1992 and amended on August 30, 1993 and August 23, 1994. That authorization is hereby further amended as follows:

2. Paragraph 1 of the authorization, as amended, is deleted in its entirety and replaced by the following:

> "Pursuant to Section 496 of the Foreign Assistance Act of 1961, as amended, I hereby authorize the Agricultural Non-Traditional Export Promotion Program ("ANEPP") project component for Uganda (the "Cooperating Country") with planned obligations not to exceed thirteen million three hundred thousand United States dollars ($13,300,000) in grant funds (the "Grant") over a period of six years and three months from the date of authorization, subject to the availability of funds in accordance with the A.I.D. OYB/Allotment process, to finance the foreign exchange and local currency costs of the project. The planned life of the project component is six years and three months from the date of initial obligation."

3. The second sentence of Paragraph 2 of the authorization, as amended, is further amended by deleting the period after the word "infrastructure" and adding the following:

> "and post harvest handling and storage of food crops."

8

4. Except as amended above, the original project authorization dated September 29, 1992, as amended, remains in full force and effect.

Signature: Donald Clark
Donald B. Clark
Mission Director
USAID/Uganda

Date: 8/2/95

Drafted: PDO:SFine SFine Date: 6/7/95

Cleared: RLA:SPage (~~Draft~~) SP Date: 6/13/95 6/13/95
A/CPPD:LDouris Date: 6-13-95
C/ADO:GLBayer Date: 6/12/95
D/CONT:KLizwelicha Date: 6/12/95
D/DIR:LDiaz Date: 7/27/95

ANR/SF/RMN/AMEND3/MAY/95

Agricultural Non-Traditional Export Promotion Project (ANEPP)
Amendment No. 3
Table of Contents

Page

Acronyms 2

I. Project Summary 3

II. Project Description and Rationale for Amendment 4

III. Description of Project Components 17

A. Agriculture Export Policy 17

B. Post Harvest Handling and Storage. 19

C. VOCA Grant 24

D. Venture Capital. 25

IV. Results and Indicators 26

V. Management and Administration of Project 29
A. Management. 29
B. Procurement Plan. 30
C. Preparation of Documents. 31
D. Implementation Schedule PHHS Component. 32
E. Monitoring and Evaluation Plan. 32
F. Audit Arrangements. 33

VI. Update on Social, Cultural and Gender Issues 33

VII. Financial Plan 34

VIII. Conditions and Covenants. 35

Revised Logframe

Annexes

Post Harvest Handling and Storage . . . . . Annex A
Venture Capital Funding . . . . . Annex B
Economic Analysis - Update . . . . . Annex C
Monitoring and Evaluation Plan . . . . . Annex D
Detailed Financial Plans . . . . . Annex E
Environmental Monitoring Plan . . . . . Annex F

ACRONYMS

ADC	Agribusiness Development Center (of IDEA)
ANEP	Agricultural Non-Traditional Export Program
C/ANR	Chief, Agriculture and Natural Resources Office, USAID
ANEPP	Agricultural Non-Traditional Export Promotion Project
APC	Agricultural Policy Committee
APSC	ANEP Project Steering Committee
BOP	Balance of Payments
COP	Chief of Party
DANIDA	Danish International Development Agency
DFCU	Development Finance Company of Uganda Limited
EPADU	Export Policy Analysis and Development Unit
EPAU	Export Policy Analysis Unit
FAO	Food and Agriculture Organization
GATT	General Agreement on Tariffs and Trade
GHAI	Greater Horn of Africa Initiative
GOU	Government of Uganda
IDEA	Investment in Developing Export Agriculture Project
KARI	Kawanda Agricultural Research Institute
MAAIF	Ministry of Agriculture, Animal Industry and Fisheries
MFEP	Ministry of Finance and Economic Planning
MTI	Ministry of Trade and Industry
NARO	National Agricultural Research Organization
NGO	Non-governmental organization
NIHS	National Integrated Household Survey
NTAE	Non-traditional agricultural export(s)
ODA	Overseas Development Association
PCVs	Peace Corps Volunteers
PEC	President's Economic Council
PHHS	Post Harvest Handling and Storage
PRESTO	Private Enterprise Support, Training and Organization Development Project
PVO	Private voluntary Organization
UEPB	Uganda Export Promotion Board
UEPC	Uganda Export Promotion Council
UIA	Uganda Investment Authority
UMA	Uganda Manufacturers Association
UNDP	United Nations Development Program
UNFA	Uganda National Farmers Association
VOCA	Volunteers in Overseas Cooperative Assistance
WFP	World Food Program

I. Project Summary:

The Agricultural Non-Traditional Export Promotion Program/Project (ANEPP) was originally approved as a combined program/project activity in FY 1988, and amended in FYs 1990, 1991 and 1992. Total funding increased from $14 million in 1988 to $38 million in 1990 and $50.5 million in 1992. As a result of guidance from USAID/W, the NPA/PA components of ANEPP were separated in 1992. At that time the ANEP Project (617-0114) was authorized with Life-of-Project (LOP) funding of $2.5 million and a Project Activity Completion Date (PACD) of March 31, 1995. The project was amended in August, 1993, to add $1.0 million and in 1994 to add $4.0 million (bringing the LOP to $7.5 million) and to extend the PACD to December 31, 1995.

The Mission now intends to amend ANEPP to add $5.8 million - $2.9 million for the new Post Harvest Handling and Storage (PHHS) Component; an additional $2.6 million for the Development Finance Company of Uganda (DFCU); $250,000 towards the Mission's proposed grant to VOCA, and $50,000 for project management. The new LOP funding will be $13.3 million and the PACD will be extended to December 31, 1998. The goal and purpose are unchanged.

ANEPP, as amended, is intended to assist Uganda to promote, diversify, and expand non-traditional exportable agricultural commodities through continued policy research and analysis and improved handling and storage of selected export commodities. By doing so, the project will contribute to improved incomes of producers and exporters of non-traditional agricultural exports (NTAEs), which in turn will increase employment and earnings in rural areas primarily, but will also impact on urban market activities and populations.

The project strategy is to improve the agricultural export policy and regulatory framework within Uganda. Additionally, ANEPP will improve post harvest handling of food crops, which will effectively increase total output of food grains available for export as well as for the domestic market.

USAID's Investment in Developing Export Agriculture (IDEA) Project is a recently started, five year, $25 million project to assist producers of high value (e.g., vanilla, chilies, mushrooms) and low value (beans and maize) NTAE crops to increase production and directly link exporters with buyers at the firm level. Besides providing technical assistance on production in the field, IDEA, through its Agribusiness Development Center (ADC), will establish a market information system with timely price information on specific commodities.

With the considerable investment of increasingly scarce resources in IDEA's production and marketing activities, it makes sense to continue to improve the policy framework for NTAEs through

another ANEPP amendment. Managed together by the Mission's Agriculture and Natural Resources (ANR) office, ANEPP and IDEA provide a coordinated program, effectively improving the market system for NTAEs. NTAEs have been defined as all agricultural exports other than coffee, tea, cotton and tobacco.

A. Goal: Increase mens' and womens' income from agricultural exports.

B. Purpose: Increase the range and value of NTAEs by resolving public and private sector constraints to export promotion.

II. Project Description and Rationale:

This section examines the rationale for an agricultural export diversification strategy for Uganda by emphasizing how well the strategy supports broader economic constraints the country is facing, how well Uganda can compete in export markets, and how well this strategy fits with the GOU's strategy for the agricultural sector. With support from the ANEP Program, considerable progress has been made in creating a favorable environment for exporters in Uganda. However, the case is made here that more needs to be done to support ongoing activities to promote the expansion of NTAEs if Uganda is to continue to diversify and expand its export base and thereby increase "rural men's and women's income". This section will also examine how this ANEPP Amendment will complement activities by USAID and other donors in addressing some of the remaining constraints to increasing NTAEs.

A) Rationale for NTAE Focus

1) Importance of an Agricultural Export Diversification Strategy to the Ugandan Economy

Increasing exports is viewed as the most fragile aspect of Uganda's economic recovery. In 1970, commodity exports from Uganda were about $ 260 million, 89 percent of which were attributable to coffee, cotton and tea (coffee 62%, cotton 20% and tea 7%). At that time, Uganda's commodity exports amounted to over 150 percent of merchandise imports. Since then Uganda's trade balance has deteriorated with a deficit in excess of $ 360 million in 1992. Uganda's capacity to finance imports has declined sharply due to a continuous decline in coffee production and prices. Concessional donor funding currently is available to bridge this gap, which is likely to continue in the short term. However, with little medium-term opportunity to finance the balance of payments deficit with exports of manufactured goods, Uganda must look to the agricultural sector to eventually cover the trade imbalance through foreign exchange earnings.

Uganda's comparative advantage in the international markets rests within the agricultural sector. Numerous studies on the export potential of agricultural commodities from Uganda indicate that they can profitably compete in regional and other international markets (Europe and the Middle East). Uganda is endowed with highly productive agricultural land, abundant water resources, an inexpensive labor supply, and a conducive climate for efficiently and cost effectively growing traditional and many non-traditional crops that are in demand regionally and internationally.

For Uganda, the capital:output ratios for agriculture, industry, and others (commerce, service, housing, utilities, and public works) have been estimated at about 2.5, 4.0, and 5.0, respectively (EPAU, 1995). The lower capital:output ratio for agricultural development indicates that a given amount of investment in agriculture would contribute more to GDP than the same amount of investment in industry or others.

As has been pointed out many times before, the Ugandan economy is heavily dependent on the agricultural sector for generating income and employment. The agricultural sector constitutes more than 50 percent of GDP and provides more than 80 percent of employment. Hence, an export strategy for agricultural based commodities emphasizing diversification is important not only in helping the country to close its balance of payments deficit; it also provides the greatest potential for increasing incomes and achieving higher living standards for the people of Uganda.

2) Consistency With Objectives of the GOU

The GOU's stated objectives for the sector are:

> "Our economy is dominated by agriculture, and remains dependent on growth in the agricultural sector. Such growth has to meet the rising food requirements of a growing population. Through exports it also has to generate foreign exchange earnings to enable us to import agricultural inputs which we are not able to produce on our own, modernize our economy, and improve the living standards of our people."

The GOU translates these broad goals into the following two development objectives: to increase agricultural productivity, especially in food crop production, raising incomes and preventing expansion into marginal agricultural lands; and to diversify the production base and reduce the heavy dependence on coffee for exports and government revenue.

According to a World Bank study (Uganda Export Strategy, July, 1991), a strategy for increasing and diversifying agricultural exports should contain three main elements. These are:

- Increasing export value of coffee, tea and cotton;

- Increasing the export value of bulky crops which are sold in the regional markets (maize, beans); and,

- Increasing the export value of other NTAEs.

Within this context, the GOU, USAID, the World Bank and other donors have pursued a program aimed at increasing exports. This assistance has been directed at creating an "enabling environment" for increasing exports through various policy reforms and by providing assistance in export promotion activities.

B) Progress to Date on Removing Constraints to Increasing NTAEs

Considerable progress has been made in improving the environment for increase NTAEs in Uganda. This includes improvements in the following key areas:

* Foreign exchange liberalization;
* The privatization of government monopolies;
* The replacement of a cumbersome export licensing system with a more rapid certification system; and,
* The lowering of tax and tariff rates.

This improved environment has brought about increases in the export value of commodities such as tea, cotton, maize, beans, vanilla and chilies, which have led to increases in household income and have contributed to reducing the BOP deficit. Much of this progress can be attributed to ANEPP and the Economic Policy and Analysis Unit (EPAU) of the project component of ANEPP, through its export policy and promotion efforts, as well as the combined effort and commitment of the GOU and other donors to increasing NTAEs.

Although it may be too early to judge the eventual impact of the export diversification strategy (since not all of the effects have been translated into exports), improvements to date have been commendable and have proven that Uganda can compete in export markets given the right incentives. However, in order to further "increase the range and value of NTAEs" and continue to increase rural incomes, there is a need for continued support which is comprehensive enough to encompass policy, production, and promotion activities. As will be discussed below, there are still a number of policy issues remaining which constrain exporters and which will be challenging to implement. There is also a need for further production advice and assistance in the promotion of agricultural exports if Uganda is to be able to continue to penetrate markets which are becoming increasingly competitive.

C) Constraints Remaining

While considerable progress has been made in alleviating many of the macroeconomic constraints faced by agricultural exporters, many technical, financial and human resource constraints still remain. Following is a review of some of the key remaining constraints.

1) Infrastructure

In spite of continual improvements, poor condition of physical infrastructure remains a constraint to agricultural exporters in Uganda, cutting into their competitive edge in regional and world-wide markets. Transportation within the region remains costly due to poor road and rail infrastructure, poor management of existing facilities and an overall lack of competition in providing these services. While major roads are in good to excellent condition a fairly extensive access road network within Uganda is in disrepair in many places with farm-to-market roads particularly less developed.

Utilities in Uganda are poorly developed, expensive and unreliable while services are concentrated in Kampala and a few other towns. In addition, the lack of suitable cold storage facilities within Uganda has been a constraint to floricultural and perishable horticultural exporters. Although a new cold storage facility at the international airport (funded though ANEPP) should help considerably, there remains a need to improve refrigeration in production areas and for commodities being transported to the airport.

USAID's limited resources mean we have no comparative advantage in the area of infrastructure projects. The GOU is attempting to improve the road system through the rural feeder roads program (to which USAID has contributed local currency) and other projects. A major dam building project at Jinja will provide increased electrical capacity, and the recently announced plan to privatize Uganda Post and Telecommunications should improve the efficiency of these utilities.

2) Agronomic Constraints

Smallholder farmers generally experience low crop yields resulting from pests and diseases, poor cultivation practices and use of low-yielding seed varieties. Improved seeds and fertilizers are not widely available and are relatively expensive except for open pollinated varieties recently developed by NARO with USAID assistance. Increasing land area under cultivation and improving cultural practices such as extra weeding and pest and disease management is difficult since all of this work is done by hand.

3) Agricultural Research and Extension

GOU expenditures on agricultural research are very low and most of these scarce resources have gone toward research on food crops. The GOU agricultural extension system remains very weak due to factors such as low salaries, insufficient transport, lack of training, and poor organization. UNDP and FAO have helped by providing some assistance to horticultural research at the Kawanda Agricultural Research Institute (KARI). Also, the World Bank is assisting in the reorganization and revitalization of the extension service.

In the meantime, private sector based agricultural research and extension services represent an attractive alternative for some NTAE crops. Vanilla and chili exporters, for example, are already providing such services. Also, the British American Tobacco Company (BAT) has developed a large-scale private extension system which incorporates 24,000 smallholders.

4) Post Harvest Handling Constraints

Post harvest handling covers the packing, grading, cooling, storage, transportation and distribution of crops between the time of harvest and its final consumption. One of the basic problems faced by those trying to minimize post harvest losses is that farmers often do not understand what measures must be taken to ensure that their produce arrives at the point of export in saleable condition, nor do they realize why proper handling is important to ensure quality. Post harvest losses in Uganda are estimated to be around 16 percent. In addition to what is lost, poor post harvest handling techniques also often result in a reduction in the quality of the remaining crop. The end result is a serious reduction in the income earning potential of Ugandan farmers.

The post harvest system for NTAE crops grown in Uganda reflects the following deficiencies:

* Improper harvesting and field selection;
* Lack of know-how and facilities for postharvest handling;
* Lack of cooling and a network of cold storage facilities;
* Improper packaging for exports;
* Lack of knowledge of international market standards;
* Inadequate product quality control and uniformity; and,
* Lack of facilities for postharvest anti-fungal and pest treatment.

5) Financial Constraints

Lack of capital is a major constraint to building Uganda's NTAE industry. Producers need working capital to cover production costs; processors need capital to buy equipment to upgrade or expand their operations; and, exporters need transactional financing to cover procurement, handling, and transportation costs.

The financial system in Uganda is weak and inefficient. With a capital deficiency in six commercial banks, the system is insolvent. The savings mobilized from the general public are being used to finance the banks' lack of capital and large non-performing asset portfolios rather than as loans to stimulate economic development. With few exceptions, the commercial banks are highly urban-oriented and their direct entry into rural financial markets is unlikely without further innovation. Non-bank financial institutions have a poor track record and no significant role in financial intermediation at the small end of the economic scale.

6) Market Information

Commodity markets are so complex and dynamic that if agro-entrepreneurs are to accurately read market signals and make efficient decisions, timely communication of vital information is essential. Traders and exporters in Uganda are not receiving adequate timely information on market conditions, particularly related to demand and prices of commodities. This deficiency affects smallholder producers as well as high value exporters. While there are a number of useful market databases in Uganda, there is no entity in Uganda attempting to put the information in the hands of the exporter.

7) Agribusiness Management

The lack of agribusiness management skills limit the growth and development of NTAEs. NTAE business leaders need management training in such areas as long-range planning, financial management, marketing strategies, and operations. Management information systems are also lacking within agribusiness firms.

8) Policy and Regulatory Constraints

As mentioned above, Uganda has been very successful in improving the environment for exporters particularly in the areas of foreign exchange liberalization, the lowering of tariffs and taxes, and in creating a more stable economic environment. Much of this progress can be attributable to assistance USAID has provided through the ANEP Program and its support to EPAU. However, as the 1993 ANEPP evaluation and several follow-up analyses have pointed out, there are considerable "second-tier"

policy and regulatory reforms which still need to be addressed if Uganda is going to continue on its path of rapidly expanding and diversifying its agricultural export base. The need to pursue a stable and consistent policy environment to replace uncertainty will be key to attracting new entrants in the NTAE drive, as well as inducing current exporters to remain as exporters.

These reforms include, but are not limited to, some of the following:

* Uganda offers no export (or other performance-based) incentives;

* Customs operations remain time-consuming (three weeks for the clearance of imports is not atypical) as 100 percent inspection of goods is practiced;

* Ugandan exporters do not have access to inputs at international prices because the drawback system is not efficient;

* The UIA continues to have difficulties with line ministries and other agencies in fully implementing the Investment Code;

* The export refinance scheme has not performed to many exporters' expectations;

* Financial constraints regarding the repatriation of dividends (not allowed if the company has loans in Uganda) and overly bureaucratic BOU procedures continue;

* The tax system is highly subjective, particularly for smaller and more rural entrepreneurs:

* Access to land, particularly for foreigners, remains difficult and this poses a burden on the development of non-traditional agricultural exports which typically rely to a large degree on foreign investment;

* Air freight rates are higher than they should be due to unreasonable policies regarding landing fees, handling charges, and fuel taxes;

* Telecommunications costs are uncompetitive and electricity service remains unreliable and subject to extremely high installation costs; and,

* Amendments to the Investment Code of 1991 to increase incentives by increasing investment protection and tax incentives such as; duty exemptions, depreciation allowances, tax holidays, and double taxation investment protection agreements.

8) Institutional and Organizational Environment

Uganda's efforts to promote exports and to undertake export-related policy analysis have been characterized by poorly defined, overlapping, and often conflicting institutional roles and responsibilities. These problems, together with inadequate and irregular financial support, have resulted in mediocre export promotion.

Currently, there are three main GOU entities engaged in export promotion. These are: the Uganda Export Promotion Council (UEPC), under the MTI; the Export Policy Analysis Unit (EPAU, formerly EPADU), under the MFEP; and, the Uganda Investment Authority (UIA), a quasi-independent unit under MFEP. The UEPC has primary responsibility for export promotion. It was mandated in 1983 and became operational in 1985. It has suffered from low levels of funding and neglect and is generally considered to be ineffective and unresponsive to exporters.

In response to this and the genuine need for the services which the UEPC was intended to provide, the GOU is in the process of establishing the Uganda Export Promotion Board (UEPB), which will effectively replace the UEPC. The UEPB is to function as an independent body, similar to the UIA, with linkages to the MTI, and is to assist individual entrepreneurs to penetrate new export markets with support programs such as trade information services, trade promotion activities and advisory services.

The establishment of the UEPB came about partly because of previous ANEPP conditionality, which identified the need for these export promotion services as a critical component of Uganda's program to expand NTAEs. The UEPB has not yet begun operations and it is too early to tell how effective it will be.

EPADU was created in 1988 as the executing agency for USAID's ANEPP. Now reconstituted as EPAU, the policy unit conducts studies and recommends policy, regulatory and infrastructure developments to improve the macroeconomic environment for non-traditional exports. EPAU is credited as a major contributor to the improved macroeconomic environment which now prevails in Uganda. In addition, EPAU has worked directly with potential exporters providing hands-on technical assistance which is now being provided through USAID's IDEA project. While many of the macroeconomic policy constraints to increasing agricultural exports have been overcome, there remain many "second-tier" policy and regulatory issues which warrant additional analysis.

The UIA, established in 1991, is primarily responsible for promoting local and foreign investment. USAID has been the major financier of UIA operations (ANEPP). While USAID assistance to

UIA is expected to continue through the PRESTO project, the GOU has been successful in getting support for UIA from other donors and the UIA has started to generate some revenue. While there are still sustainability issues surrounding the UIA, the institution has been successful in attracting investors and in lobbying for improvements in regulations which affect investors in Uganda.

D) USAID/Kampala's Programs to Address Constraints

1) Investment in Developing Export Agriculture Project

USAID/Kampala's Investment in Developing Export Agriculture (IDEA) Project, which has just gotten underway, will address many of the constraints listed above. The project purpose is to increase marketing of selected non-traditional agricultural exports by targeting:

* Low value food crop exports to regional markets that will increase incomes of a large number of farmers, most of them smallholders, marketing agents and exporters and will be a major benefit to the national economy; and,

* High value exports that will provide substantial returns to a relatively small number of producers and exporters and will enhance foreign exchange earnings.

The low value export development component includes research and extension and seed multiplication and distribution to increase yields and improvements in market information and assistance to commodity exporters in establishing market contacts in order to strengthen the export marketing system. The high value program will work with exporters and, through them, with producers of the selected commodities and will include research activities, development of market contacts and commodity-specific market information systems and specialized technical assistance and training in production and post harvest handling techniques. IDEA will assist NTAE firms to develop sound business plans and to present them to appropriate funding sources in an effort to help overcome formidable financial constraints. IDEA will also provide support to the Africa Project Development Facility (APDF) which can provide financial assistance to medium and large scale firms ($250,000 and over).

2) Private Enterprise Support, Training and Organizational Development Project:

While many of the policy and regulatory constraints listed above pertain to agricultural exporters, they also impact the private business environment in general. In order to address some of the more general constraints to private sector development in Uganda, USAID/Kampala is initiating the Private Enterprise Support,

Training and Organizational Development Project (PRESTO). As presently conceived, PRESTO will assist in the development of micro, small and medium sized enterprises in Uganda through specific micro-enterprise interventions, addressing policy and regulatory constraints, and a business association initiative.

By providing support from long and short term advisors in the MFEP and UIA, it is envisioned PRESTO will address many of the remaining policy and regulatory constraints listed above. Assistance to UIA will include changes or modifications to specific laws and regulations such as: Bankruptcy Law; Mortgaging Law; Insurance Act; Leasing Law; Condominium Law; Arbitration Act;Electricity Act; Uganda Posts & Telecommunications Act; and, National Water and Sewerage Corporation Decree. The PRESTO supported advisor to MFEP will work on modifying policies which include:

* Helping to establish an appeals court (or arbitration process) for tax disputes;

* Assistance in further simplifying import/export procedures;

* Providing advice on the establishment of double-taxation treaties;

* Helping to establish a simplified duty drawback program; and,

* Helping to institute a more user-friendly bonded warehouse scheme by eventually moving to a system of paper controls.

PRESTO contains a provision to increase microentrepreneurs' access to savings and lending services. Besides an institutional Capacity Enhancement Program (ICEP) to provide training and information on how to provide financial services to microenterprises, a Financial Services Grant Program (FSGP) will manage a pool of grant funds available on a rolling competitive basis to commercial banks and NGO providers of financial services to microenterprises. The grants will range form $0.5 million to $1.5 million, for operational costs and loan capital for starting or expanding programs targeted at microenterprises.

USAID will also continue its assistance to the UIA, through PRESTO support in the area of facilitating domestic and foreign investors to negotiate the legal and bureaucratic maze that faces investors in Uganda. In addition, the UIA will recommend changes in specific laws and regulations or outright repeal of outdated aspects of the legal structure which constrain investment in Uganda. PRESTO will also provide an advisor to the MFEP to assist in reform and implementation of a variety of policies and

regulations that inhibit micro-, small and medium sized businesses.

E) Rationale for Proposed ANEPP Assistance

The remaining constraints listed above will be addressed through assistance from other USAID Projects such as IDEA and PRESTO, and by activities of other donors. ANEPP will complement these efforts by addressing additional constraints relating to the policy and regulatory environment and by reducing crop loss due to poor post harvest handling practices. One of the reasons ANEPP has been successful is its flexibility --its ability to deal with issues and constraints as they arise (1993 ANEPP evaluation). ANEPP will also assist in promoting the increase in NTAEs by supporting the venture capital fund at DFCU and additional hands-on technical and agribusiness management assistance through the VOCA Farmer-to-Farmer program.

1) The Need for Export Promotion and Development Services

The provision of "hands-on" promotional and advisory services is considered to be an important ingredient to a successful export development program. In Uganda these services have been determined to be inadequate, noting an acute need for a high-quality, sustainable source of export promotion and development services (Doyle, Rao and Waniala, March 1994). As noted earlier, in the past, these services were provided by the public sector Uganda Export Promotion Council (UEPC) in the Ministry of Trade and Industry (MTI) which was poorly funded and, as a result, was widely considered to be marginal and ineffective.

In order to rectify this deficiency and as conditionality under ANEPP, the GOU has agreed to replace UEPC with the Uganda Export Promotion Board (UEPB) which is expected to receive better support from government, including increased financial resources. The UEPB is to function as an independent body, similar to the UIA, with linkages to the MTI, and is to assist individual entrepreneurs to penetrate new export markets with support programs such as trade information services, trade promotion activities and advisory services.

At present, USAID/Uganda is providing support for similar hands-on services to a targeted set of commodities through the IDEA project, as was noted above. In addition, ANEPP will continue to provide hands-on technical assistance through the VOCA Farmer-to-Farmer program. This program has been successful in assisting in agricultural production, agro-processing and agribusiness development as well as in contributing to the strengthening of associations. While these services will be useful in continuing

efforts to expand and diversify agricultural exports there is a need to develop the capacity to deliver these services in the UEPB, or some other local institution, if they are to continue to be provided beyond the life of IDEA and ANEPP.

The UEPB is defined in a draft bill at this time, fulfilling a previous ANEPP conditionality. However, once established, the UEPB will not be ready to begin operations until late 1995. Therefore, it is still too early to judge the real commitment of the GOU to this institution. Given these uncertainties and the limits on resources faced by the USAID Mission, support for UEPB is not included in this ANEPP amendment. However, since the GOU was encouraged by USAID and other donors to establish the UEPB, the mission may consider providing short term technical assistance in helping to organize and structure the UEPB through other ongoing projects (i.e., Policy Analysis and Capacity Building) if requested to do so by the GOU.

The need for building local capacity to deliver market information, promotional and advisory services should be noted. While USAID is legally and regulatorily constrained as to the types of promotional services it can support, future support to UEPB in the provision of market information and advisory services may be worth consideration. As the IDEA project gains experience in these areas, USAID assistance to the UEPB could enhance the effectiveness of the IDEA project if UEPB were to assume some of the on-going market information gathering and dissemination activities which IDEA technical advisors will have developed. This would allow some technical advisors to move into new areas. Also, in the spirit of "wait and see," experiences from the IDEA project might prove to be useful in setting up the UEPB.

2) The Need for Continued Agriculture Policy Analysis

In order to complement these efforts, it is proposed that ANEPP continue to support policy issues which relate to agricultural exporters more specifically. This would include issues such as:

* Cross-border or regional trade in agricultural commodities and its impact on food security;

* Projected impacts of the GATT on agricultural exports from Uganda;

* The establishment of export protocols for potential export markets; and,

* Recommendations on setting grades and standards for agricultural exports, particularly for bulky commodities produced for regional markets.

These issues, along with other specific policy constraints which might arise over the course of the program, would be addressed through continued support to EPAU. This would require some adjustment in the EPAU research agenda to a more sector specific focus which fits more closely with ANEPP objectives.

It is desirable that eventually the USAID policy analysis and implementation support to the private sector in Uganda be consolidated in a more unified effort. This will become increasingly more important as USAID re-engineering polices are implemented and the USAID/Uganda mission's projects evolve into results packages contributing to the same, or similar, strategic objectives. The lines which now divide projects are expected to disappear, resulting in a more unified, focused, results oriented program.

In order to move in this direction on policy reform issues, it is recommended that USAID-supported advisors in EPAU, UIA, and MFEP and the IDEA COP form a working group, with counterparts, which meets regularly to review and discuss policy issues facing the private sector in Uganda. This will not only serve to establish a more comprehensive and unified policy reform effort, it will also add weight and credibility to policy reform initiatives.

There has also been considerable discussion within and outside of government on where EPAU should be located. Some have argued that the unit has been quite effective where it is presently located, within the MFEP, while others support moving EPAU into a revamped UEPB, alleviating a perceived need for policy analysis capability in that institution. While both arguments have merit, USAID recommends continued support to EPAU as it is currently situated and structured for the next year, and will revisit other options with the GOU over time.

3) The Need for Post Harvest Handling and Storage Assistance

There is a serious need to decrease post harvest crop losses in Uganda. While the IDEA project will assist by providing technical assistance to producers and exporters of targeted high-value crops, there is still a need to provide further assistance to smallholder export crops such as maize and beans. A recent study by the Food and Feed Grains Institute (FFGI) of Kansas State University concluded that post harvest losses of maize and beans amount to 15 and 16 percent respectively. In monetary terms this amounts to losses in excess of over US $18 million per year. Analysis indicates that postharvest losses and the poor quality of maize and beans result from poor handling practices and inadequate storage resulting from:

* Poorly dried grains with high moisture content at harvest;

* Poorly ventilated, damp, and dark storage facilities leading to high relative humidity conditions;
* Lack of preventative practices for insect, rodent and mold control in storage;
* Improper threshing, shelling, and handling practices which result in undergrade, mixed, and broken grain;
* Poor handling practices resulting in dirty, red-soiled maize as a result of drying on the ground;
* Impure maize and beans mixed with excess foreign matter such as soil, small stones, and other plant material; and,
* Impure beans with a mixture of different varieties.

By tackling these problems, the PHHS Component of this ANEPP amendment will be able to significantly decrease crop losses and increase the quality of marketed maize and beans leading to increased income and export earnings. Further, these activities fit very close to activities being undertaken, particularly in the provision of production and marketing advice to low value crop producers. Hence, it is proposed that the post harvest handling and storage activities which will be provided under this ANEPP amendment be placed under the supervision of the IDEA technical assistance team to achieve more effective results and to better exploit the complementarity of the two projects.

III. Description of Revised Project Components

To broaden ANEPP's support of the growth in NTAEs and continue its contributions to the successes in the GOU's development strategy, USAID proposes to amend the ANEPP Project, to re-focus on the following four components:

Agricultural Export Policy
Post Harvest Handling and Storage
Venture Capital
VOCA Farmer-to-Farmer Technical Assistance

A) Agriculture Export Policy

The GOU objectives for the agricultural sector will not be met without continued improvement of the environment to promote both agricultural production and export promotion. The success of ANEPP's early support for EPADU's policy research and analysis in macroeconomic issues led to GOU reforms outlined above. EPADU, reconstituted as EPAU, focussed increasingly on the policy constraints to growth in exports in 1994. Now PRESTO will focus on policy and regulatory constraints alleviation as described above, but the specific needs of agricultural exporters must continue to be addressed in policy reform efforts through the revised ANEP.

The professional staff of EPAU will adjust their workplans to a sector-specific focus more closely meeting ANEPP objectives, such as:

* Cross-border or regional trade in agricultural commodities and its impact on food security;

* Projected impacts of the GATT on agricultural exports from Uganda;

* The establishment of export protocols for potential export markets; and,

* Recommendations on setting grades and standards for agricultural exports, particularly for bulky commodities produced for regional markets.

The ANEP Project Steering Committee will provide guidance on other issues to be analyzed by EPAU as they arise.

EPAU has a staff of five Ugandan professionals (a macroeconomist, a trade economist, an agricultural economist, a statistician and an accountant) as well as a small support staff.

1) USAID Support for Agriculture Export Policy Analysis

a) Support to EPAU

Sufficient funds remain unearmarked in the current ANEPP budget for the activities described in this amendment. This amendment approves continued USAID support for three years (July 1995 - June 1998) for the existing Ugandan staff ($360,000 for five professionals and four support staff), the operational costs of EPAU ($417,000), and additional short term technical assistance (ten person-months $200,000) as well as limited commodities ($15,000) and external training ($60,000). The illustrative budget for the three year period is at Annex E.

It is important to note that USAID/Uganda and the GOU will re-visit the issues of structure and institutional home for EPAU around the time of the completion of contract and departure of the current long term advisor (May, 1996). Options include maintaining EPAU as currently structured and housed under the direct supervision of MFEP, moving it under the newly established UEPB, or modifying and combining it with PRESTO's facilitator within MFEP.

Because of the re-focus of EPAU analysis toward agriculture sector issues, three EPAU professionals will benefit from external training in the area of agricultural sector policy analysis during the course of the project. Accordingly, three one-month training activities, one for each of the professionals

identified, is provided.

EPAU also needs one additional computer with an expanded memory and speed and upgraded software, to enhance capacity for analysis and maintain a database.

b) Short term technical Assistance

The activities of the next three years also include short term technical assistance (ten person-months) for a buy-in to USAID/W's APAP III and/or an IQC, when specialized expertise is needed in specific areas. These funds are also available in the current ANEPP budget.

B) Post Harvest Handling and Storage

The Post Harvest Handling and Storage (PHHS) component of ANEPP will help producers to increase the total amount of maize and beans available for market through reduction of losses due to improper post harvest handling. The activities will be implemented by the PHHS unit at the Kawanda Agricultural Research Institute (KARI). This will be accomplished through four major activities, as described below, for $2.9 million under this amendment.

Some funds and other resources will be provided for applied research and initial transfer of commercial drying technology on high value NTAE crops such as chilies, mushrooms, and selected fruits. That research will be coordinated among KARI researchers, faculty from Makerere University Departments of Food Technology and Agricultural Engineering, and the high value advisor to IDEA. Some grants will be available to selected graduate students who will conduct post-graduate research at KARI on drying the selected crops. The researchers will be advised by the Makerere faculty members.

1) Identification, testing, and validation of PHHS technologies

The solutions to the problems in the post harvest handling of maize and beans are known technology. The PHHS component will identify and test these technologies as appropriate for Ugandan conditions.

To maximize the impact of this project on the lives of targeted groups in the grain industry, it makes sense to select districts where IDEA is operating. It is assumed that those districts will have achieved high production potential, thus requiring improved PHHS of maize and beans. Selection of the pilot districts will be by KARI/PHHS staff with USAID/Uganda and IDEA advisors. It is anticipated that at least three pilot districts from among major bean and rice producing districts (Iganga, Kapchorwa, Mbale,

Mbarara, Masindi) will be selected for demonstration of the tested post harvest technology. The impact of the pilot project should be extended on a national level, as results of field testing and educational materials about PHHS technologies will be disseminated by the trained extension workers in their areas as well as by media campaigns.

Specific technologies to be tested and modified include, for example, various types of grain shellers, bean threshers, grain cleaning equipment, natural grain drying methods and techniques (such as spreading grain on plastic sheets under the sun), artificial dryers, and improved handling and storage systems.

2) Training of trainers from organizations and agencies involved in maize and bean production

This activity eventually will be key to the dissemination of improved post harvest handling and storage practices to target end-users at the national level. Trained extension workers will be able to continue PHHS activities beyond the LOP and beyond the pilot districts. Early in the project, this activity will include preparation of training materials such as manuals, pamphlets, slides, overhead transparencies, video cassettes, models and posters.

Specific course contents will be developed according to needs and situations as determined by KARI/PHHS staff. Each course will have 20 - 25 participants.

The initial training of trainers will include three courses of three week duration for MAAIF extension personnel who will be involved in the transfer of PHHS technology at the small scale farm level. This will involve familiarization with the PHHS program, available technologies, adult education methods, and preparation of audio-visual aids. Similar courses will be conducted for selected UNFA, HABITAT, PCVs, and CARE extension workers aimed at medium and large scale farmers.

Short courses (i.e., two courses, each three weeks long) will train technicians from grain trade and export enterprises in specific skills such as equipment use, natural and artificial drying, and integrated pest management techniques.

This training of trainers approach aims to enhance capability of all personnel involved in the PHHS component so that they will be able to develop training activity plans at the district and parish levels, using the materials produced in the initial phase of this activity. The effect of this training will be multiplied far beyond the districts in this pilot project, as extension workers take the new technologies out to their clients.

Dissemination of post harvest technology information will be continuous via radio, television, newspapers and journals, seminars, workshops, field demonstrations and on-farm trials.

3) Technology transfer

This activity aims to encourage producers and exporters to adopt appropriate PHHS technologies which will translate into increased income for rural men and women. After testing promising technologies at Kawanda, the KARI/PHHS team will devise a demonstration/training program for farmers, particularly members of farmers' associations, to ensure that new technologies are adopted by farmers and exporters.

Field trials and demonstrations will take place at the fields of farmers or at trading centers within the target districts or other appropriate locations. The PHHS team (advisors provided by this component and KARI staff) will demonstrate the use or application of technologies previously tested and validated, with the participation of the extension workers and potential end-users. The PHHS team will modify technologies or equipment based upon feedback from participants as necessary.

One-day seminars to explain the benefits of the technologies will be conducted for target groups prior to field trials and demonstrations, to encourage participation in the field work.

4) Monitoring and Evaluation

Monitoring adoption of new technologies, reliable data on grain and beans handling and storage is key to measuring the success of this component of the amended ANEPP.

Baseline information will be gathered by participating staff of MAAIF, NGOs, PCVs and PVO extension services during the initial phase of project implementation. Some baseline data on grains and beans in certain districts has been gathered by KARI researchers under the UNDP. Similar surveys will be undertaken at the farm level in the selected pilot districts.

A parallel survey will be conducted to establish baseline information on grain and beans handling and storage at trader and exporter levels. Post harvest losses, at both the trader and export levels, will be determined by the baseline, to be evaluated again at the end of the project.

5) USAID/Uganda Support for Post Harvest Handling and Storage

USAID/Uganda will award a Cooperative Agreement to an NGO or a US agriculture university participating in one of several consortiums supporting USAID programs worldwide.

The following inputs will be provided to the PHHS unit at Kawanda Agriculture Research Institute:

a) Technical Assistance:

One long term advisor, to be stationed at KARI for three years, to manage the project. The advisor will have a broad background in grain PHHS systems at all levels, including marketing, as well as experience in training and extension work.

Short term technical advisors (11 person-months) to provide T.A. in the initial months of the project include the following:

- Agricultural engineer: (4 person months) to work with the KARI/PH team to establish project activities including the initial training sessions and overall work plan.

- Food processing engineer: (3 person months) to set up adaptive research at KARI on solar and/or biomass energy heated dryers for high value crops.

- Stored grain entomologist: (2 person months) to set up IPM strategy, training program, and selection of improved storage system/practices.

- Mycologist: (2 person months) pathologist with experience in aflatoxin, etc. He/she will develop the local capability in mold and mycotoxin assessment and monitoring strategy and grain handling procedures to reduce risk of aflatoxin contamination.

b) Commodities:

To transport KARI and PHHS staff for field work, data collection, training and monitoring, ANEPP will provide four 4WD, double cabin pick-up trucks and six motorcycles. ANEPP will procure an extensive list of training equipment, research, field trial and demonstration equipment, (Annex A). Three notebook computers and printers, one desktop computer with laser printer, and office furniture will be provided, as well as office supplies and scientific supplies.

c) Allowances, Field Support:

Some support will be provided for per diem allowances for the project staff and those from participating agencies and institutions for field work and training activities in the target areas.

This amendment provides funds for the GOU contribution toward housing for three Peace Corps Volunteers in the three pilot districts, for two years. USAID and the GOU will arrange, in a Memorandum of Understanding (MOU) that the funds ($15,000 per year for two years) be directly paid to Peace Corps Uganda.

6) GOU Support

The GOU will provide an office and working space for the PHHS long term advisor, short term advisors, and the support staff supplied by KARI and NARO/MAAIF. The GOU will designate a permanent KARI senior staff professional as the key person to act as counterpart of the PHHS long and short term advisors. The counterpart will assist in the design and implementation of PHHS programs.

KARI will allocate existing PH Program staff time to devote to the activities under the PHHS component of ANEPP, from the technical unit and also the administrative support staff. Additional professional and technical staff will be seconded by NARO/MAAIF as required to meet the increased activities at KARI.

The annual GOU contribution to the PH Unit at KARI is valued as follows:

	U. Shillings
A. support staff salaries and allowances: includes training and expendables	
- Total	37,465,510
B. professional staff and benefits:	
- Total	58,644,000
C. Office accommodation:	6,120,000
Total annual GOU contribution to PHHS component: (see details at Annex F)	102,229,510

At the exchange rate of U/Sh. 932 to $1, this contribution is valued at some $330,000 over the LOP. The $3 million World Bank loan for the National Extension Program is also counted as GOU counterpart contribution to this component.

7) Institutional Relationships

The Ministry of Agriculture, Animal Industries and Fisheries (MAAIF), through the National Agricultural Research Organization (NARO), is the liaison for this activity, and the Kawanda Agricultural Research Institute (KARI) is the lead institution, through its National Post Harvest Program.

The KARI PH Program comprises 11 professionals. They, with the long-term advisor and short-term advisors funded by ANEPP, will form the key core of human resources of the PHHS component. Linkage with NGOs such as UNFA, Ugandan Exporters Association, as well as PVOs such as CARE, HABITAT, Lutheran World Service is crucial to success of this activity. IDEA, especially the low value advisor and the COP, will provide close collaboration at the farm level and for technical and marketing advice. NARO/MAAIF will provide professional and technical staff to be seconded as needed.

C) Technical Assistance

On behalf of USAID/Uganda, the Regional Contracting Office in REDSO/ESA is in the process of negotiating a three-year, $1.3 million grant to Volunteers in Overseas Cooperative Assistance (VOCA) for the purpose of providing technical assistance to four bilateral projects. Combining funding from several projects in a single grant to VOCA will enable the Mission to realize savings in administrative and overhead costs. This grant is also being done in conjunction with a Title II Local Currency grant to VOCA for the provision of technical assistance to three local currency grantees.

1) VOCA's support to NTAEs

ANEPP's contribution ($500,000) to the Mission's grant to VOCA will provide 33 VOCA "assignments" (short term technical assistance) over three years (10 in year 1, 11 in year 2, and 12 in year 3). ANEPP's funding will enable VOCA and ANEPP, with IDEA, to continue VOCA's support to NTAEs (begun in 1992) through September, 1998.

In Uganda, VOCA has supplied highly qualified volunteers for short term technical assistance and training in such NTAE sectors as farm production/marketing/management in chilies, formation of an agricultural exporters' association to represent and further the interests of agricultural exporters, and developing marketing and business plans for a seed growers' association.

REDSO's July 1994 mid-term evaluation of the VOCA/Uganda program lauded the program for achieving its objectives and success in assisting its clients to improve agricultural production, agroprocessing and agribusiness development as well as strengthening associations.

VOCA will continue to address constraints to growth in the NTAE sector by providing volunteers from U.S. cooperatives, private agribusinesses, land grant universities, the U.S. farm credit system, and U.S. extension service. Their technical assistance will be in areas such as extension training, increasing production, improved delivery of services such as credit and marketing, generating the capacity for downstream processing, improved business management skills, increasing organizational capacity in agricultural associations, improved post harvest and storage methodologies.

VOCA's goal and objective are highly consistent with for the agricultural sector of Uganda are highly consistent with the goal and purpose of ANEPP. Goal: To ensure increased viability of the agricultural sector by strengthening targeted sub-sectors within the agribusiness community with special emphasis on the export of non-traditional agricultural products. Purpose: To enhance the productive potential of small and medium scale farmers and agribusiness and to improve their economic well-being through the provision of "hands-on" technical assistance.

2) USAID support to VOCA; Institutional Relationships

The VOCA volunteers funded in 33 "assignments" under ANEPP will work with ANEPP and IDEA staff in areas from field production and post harvest handling to business planning and marketing. VOCA volunteers will provide targeted short term technical assistance to increase Ugandan technical, organizational and managerial capacities in the NTAEs. Exact requirements for the assignments funded by ANEPP's share of the grant will be determined by consultation among the ADO, the PHHS long-term advisor, and the IDEA COP.

This amendment provides partial funding of the proposed mission grant to VOCA; other funding will be from other projects in the ANR portfolio, and from proceeds of PL-480 transactions. VOCA professional technical assistance is provided by volunteers. Their subsistence and travel expenses are funded by the grant. A portion of the grant goes toward VOCA/Uganda's operational expenses, toward the cost of one new 4WD vehicle, and toward the costs of home office support in Washington.

D) Venture Capital

1) Support to the Development Finance Company of Uganda

This amendment provides an additional $2.6 million in grant funds to the Development Finance Company of Uganda (DFCU), bringing the ANEPP contribution to date to a total of $4.4 million.

USAID has supported the establishment of a venture capital fund at the DFCU using resources from the Rehabilitation of Productive Enterprises (RPE) Project ($2.55 million) and ANEPP ($1.8 million), for a total of $4.35 million to date. Although the grant under ANEPP was not specifically targeted to investments in agriculture, nearly half of the enterprises approved for financing are NTAEs (as defined by the GOU) such as roses and pyrethrum and frozen fish production for export. In this next phase of venture capital support from ANEPP, preference will be for the development of rural agricultural investments, particularly in the NTAE sector.

Lack of access to financing in Uganda has been identified as an especially critical constraint to the expansion of non-traditional exports. The availability of venture capital, in particular, is considered a precondition for new starts or project expansions in the relatively high risk area of non-traditional exports. Thus, by reducing one of the principal constraints identified to date, ANEPP's support for venture capital expansion has been contributing directly, though not exclusively, to the achievement of the ANEP project goal and purpose.

Increased access to equity financing enables more exporters to initiate and sustain export-oriented enterprises. All investments are expected to generate employment and growth in the economy, including in rural areas. DFCU itself, as the only equity financing mechanism in Uganda, provides a demonstration model for replication by other donors, financial institutions and indigenous investors.

2) USAID Support and Institutional Relationships

This grant will provide operational costs for two years at up to $600,000, and $2 million for equity financing. This grant will continue the provisions previously agreed upon by USAID and DFCU: financing for the venture capital fund for equity investments and shared operational costs of managing the facility. The equity resources will be invested and managed on a commercial basis. DFCU will continue to require separate appraisal and supervision of equity and debt investments. There will be close cooperation and referral from the mission's IDEA Project, mission staff and the other components of ANEPP to the DFCU for consideration of specific investment opportunities.

IV. Anticipated Results and Indicators

The following results are anticipated with the successful implementation of the amended ANEPP project:

- NTAEs will rise from $68.4 million in 1993 to $137.6 million by 1998;

- Twenty NTAEs will be earning more than $2 million each by 1998 from a total of nine in 1993.

A) Agriculture Export Policy

Over the LOP, EPAU will have analyzed agricultural sector policy and regulatory constraints, disseminated findings, consolidated support and provided guidance to the GOU for implementation of needed reforms to alleviate those constraints, from areas described below.

* Cross-border or regional trade in agricultural commodities and its impact on food security;

* Projected impacts of the GATT on agricultural exports from Uganda;

* The establishment of export protocols for potential export markets;

* Recommendations on setting grades and standards for agricultural exports, particularly for bulky commodities produced for regional markets.

EPAU will also respond to needs for other analysis and research as policy and regulatory changes take place and other issues arise.

Indicators: The number of policy and regulatory issues analyzed and advocated by EPAU which result in reform or alleviation actions by the GOU.

B) Post Harvest Handling and Storage

- Increased involvement of small scale farmers (the majority are women) in the use of improved post harvest technologies will reduce post harvest loss and improve quality. Indicator: at least 35 percent of the small scale farmers in the pilot areas will have adopted new technologies.

- Increased involvement of traders, farmer associations (large scale farmers), processors and exporters in the use of post harvest technologies. Indicators: A minimum of 100 large scale farmers or members of farmers' associations will have adopted new post harvest technologies. A minimum of 80 local traders and processors, and 50 wholesalers of grain and grain products and 15 exporters will be using improved post harvest technologies such as drying, storage, quality maintenance, processing and general handling.

- Greater quantity and improved quality of maize and beans reaches the export market with standards acceptable to importers. Indicators: Decreased quantity of physical loss of maize and beans by 50 percent in the pilot districts (from the current loss of up to 30%). Seventy five percent of the maize and beans reaching traders and exporters from the pilot districts would pass minimum quality factors used in Uganda.

- Increased capability of the post harvest program at KARI to carry out research and technology transfer outreach programs. Indicators: Field extension staff designing and implementing training programs using and modifying materials produced under this project. All selected extension staff (MAAIF, NGOs, PCVs, PVOs) in the pilot areas will have been trained and be knowledgeable about improved post harvest technologies. Appropriate technologies have been field tested, adapted for local conditions and used in training.

C) ANEPP Contribution to VOCA Program

VOCA presents the following expected achievements for its Uganda program in support of NTAEs as illustrative, since specific assignments will be determined after the mission grant is finalized. It is anticipated that VOCA's technical assistance, in cooperation with ANEPP and IDEA activities, will contribute to the following results:

- increased technical skills in targeted areas of production and processing;
- increased organizational capacity in agricultural institutions/associations;
- improved business management skills;
- improved agricultural production practices;
- increased and improved crop production;
- increased producer marketing capacity;
- increased quantity and quality of NTAEs;
- increased employee income in the agricultural sector
- increased farm income;
- increased income generation opportunities for women and women's groups;
- improved PHHS methodologies;

- improved agroprocessing techniques.

D) Venture Capital

Increased access to equity financing enables more exporters to initiate and sustain export-oriented enterprises, leading to an increase in the range and value of NTAEs, and increased employment and economic growth, particularly in rural areas. Indicators: Number of new enterprises financed. Number of new jobs created as a result of the new enterprises. Increase in NTAE firms. Increase in annual exports attributable to this equity financing.

V. Management and Administration of the Project

A) Management

The Grant Agreement with the GOU will be signed by the Ministry of Finance and Economic Planning (MFEP). The Ministry of Agriculture, Animal Industries and Fisheries (MAAIF) will be the liaison for the post harvest handling and storage component of the project, through NARO's Kawanda Agricultural Research Institute (KARI).

Additional funding for venture capital will continue to be channeled through the DFCU under the existing structure for approval and disbursements.

USAID project implementation, monitoring and reporting of ANEPP is the responsibility of the Agriculture and Natural Resources (ANR) Office. The USDH Agriculture Development Officer (ADO) is the Project Officer, with overall responsibility for project supervision and management. The ADO is assisted in managing the project activities by an FSN/PSC who handles all monitoring and evaluation activities as well as environmental coordination in the ANR portfolio, and is funded by ANEPP.

The ANEP Project Steering Committee (APSC) will provide direction and coordination for all project activities and will be a forum for finding solutions to implementation problems. The APSC will comprise the following representatives and will meet monthly or more frequently as required.

-USAID/Uganda C/ANR
-USAID/Uganda ADO
-Director of NARO or designee
-EPAU representative
-Comm. of Planning - MAAIF
-PHHS long term advisor
-DFCU G.M. or designee
-COP IDEA project
-PRESTO representative

Within the mission, the ANEP Project Management Committee, comprising mission staff whose functional expertise will contribute to smooth project management, will review progress and facilitate mission actions and decisions during implementation. The mission training officer will assist ANR in processing training applications and visa applications for the limited external short-term training for EPAU and KARI staff. He will advise the PHHS contractors on planning and logistics for the in-country training programs to be funded under the PHHS component.

B) Procurement Plan

The following procurement actions are planned:
1. USAID will prepare a PIO/T for RCO, REDSO ESA action for award of a Cooperative Agreement (CA) to an NGO or a U.S. agricultural university for long-term and short-term technical assistance to the Post Harvest Unit at KARI. The CA will include the procurement of office supplies, computers, and support for operational expenses of the Post Harvest Unit and the PHHS long term advisor, as well as all costs associated with short term in-country training, including scientific and farm equipment for the PHHS component.

2. Pre-implementation procurement for PHHS:

USAID/Uganda EXO will procure four 4WD double-cab pickup trucks, and six motorcycles, for PHHS extension work. The EXO will also procure one complete set of residential furnishings for the long term advisor under the PHHS component. PIO/Cs for these items will be issued in July, 1995.

3. USAID will award a grant to the DFCU for continued support of operational expenses (up to $600,000 for two years) and equity financing ($2,000,000). This grant will be subject to the availability of funding in FY 1996. (RCO).

4. USAID will award a grant to VOCA for the VOCA/Uganda program in July, 1995 (RCO).

5. It is envisioned that buy-ins to central USAID/W projects such as APAP III or contracting with an IQC will be undertaken to provide short term technical assistance as needed for EPAU. This procurement, by PIO/Ts (for action by the RCO or USAID/W), will be planned after the activities under this amendment are underway and needs identified by the participating entities.

6. The Mission PSC funded by ANEPP has a contract funded by the original ANEPP (617-0113) through June 1996. Funding for two additional years will be provided in existing funds in this project amendment (617-0114).

7. Upon signing this amendment, the Mission will issue a PIL for signature by the GOU which agrees that USAID/Uganda will disburse funds directly from the PHHS component of the project budget to Peace Corps/Uganda, as part of the GOU's support to Peace Corps Volunteers working in NTAEs.

C) Preparation of Documentation

ANEPP Amendment approved	Month 1
Grant Agreement signed by USAID/GOU (MD)	
PIL to GOU to transfer funds USAID to PC	
SOWs for PHHS T. A. (PIO/Ts) (ANR - REDSO)	Month 2
Specifications for commodities (PIO/Cs) (ANR - EXO)	
CA for PHHS TA (REDSO)	
IFB for commodities (EXO)	
Commodities ordered (EXO)	
Residence leased for LT TA (EXO)	
EXO starts to prepare residence	Month 3
CA executed (REDSO, AID/W)	
Grants prepared VOCA, DFCU (ANR, PPD)	
Grants signed (REDSO)	
PHHS advisor arrives (Sept 1995)	Month 4
Commodities start to arrive	Month 7
Long term advisor to EPAU departs	Month 11
Prepare PIO/T to extend Mission PSC contract	
Review EPAU; decide institutional home	Month 12
(if EPAU moves, prepare PILs - ANR, PPD)	
Mid-term review PIO/T prepared (ANR)	Month 21
Mid-term review contracted, conducted	Month 22
Final evaluation PIO/T (ANR)	Month 39
PACD	Month 43
PACR (ANR)	Month 45

D) Implementation Schedule for the Post Harvest Handling Component.

```
                          Period in Years
                          ____________________________________
ACTIVITY                  0         1         2         3
(a) Contractor hired      --
(b) PHHS team arrives     --
(c) Baseline data           ----
(d) Tech pack selection   --
(e) Tech pack testing       --
(f) External training     -- (pre-implementation orientation)
(g) Extension staff trng    --
(h) UNFA, NGO staff trng      --
(i) Traders' technicians trng  --
(j) Field trials                -- -- -- -- -- -- -- -- -- --
(k) Seminar-workshops        --    --    --    --
(l) Demo/techn. transfer       -- -- -- -- -- -- -- -- -- -- --
(m) Proj. evaluation                      --                --
```

E) Monitoring and Evaluation

The Mission's Agriculture and Natural Resources (ANR) office will have the primary responsibility for monitoring the ANEPP program. The Monitoring and Evaluation Plan detailed in the Annexes describes the structure planned for managing the ANEPP/IDEA program using USAID's re-engineered results package guidance. The final monitoring and evaluation structure will be subject to the Mission's adaptation to "reinvention" guidelines. Workplans are key to the implementation and monitoring of ANEPP. The team leader will assure that the first annual plan, including a workplan for each of the components of the project, will be submitted to USAID and the APSC for review and discussion, and approval of the APSC, within the first 60 days of the team's arrival in Uganda. Thereafter, annual workplans will be submitted during the last month of the project year, for the same process. (The DFCU component will not be subject to the workplan, since the current plans for periodic review, monitoring and reporting will suffice.) Field activities and vouchers will be approved according to the approved workplan activities and budget. The workplans will provide input specific to the Mission's planning and reporting requirements, particularly the annual plan, quarterly progress reports, disbursement requests and accruals.

Each component implemented by a contractor or grantee will include a monitoring and evaluation plan. Development of the M&E systems for each component and the overall project will be coordinated with the ANR M&E Specialist, and will be incorporated into the Mission's impact reporting system. ANR will work closely with the relevant GOU Ministries and private sector implementing organizations in developing quarterly and annual implementation targets and in reviewing progress in achieving these targets.

ANR will write the statement of work and initiate contracting for the final . The final evaluation will take place within the last three months of the LOP.

F) Audit Arrangements

During the life of the project, annual non-federal/recipient audits (NFAs) will be performed to determine that USAID funds have been properly accounted for and used for the purpose intended in accordance with applicable laws and regulations. GOU contributions to the project are subject to the same procedures. ANR and the USAID Controller's office will prepare statements of work and documentation for the contracting of local audit firms.

VI. Update on Social, Cultural and Gender Issues

The GOU's strategy of diversifying exports with emphasis on NTAEs is providing new business activities for all involved in agricultural production, marketing, and export. Sound policies affecting the expansion of NTAEs will level the playing field in regional markets, allowing Ugandans the opportunity to exploit their comparative advantage in agriculture. More than 80% of Ugandans are involved in agriculture. Because of the comprehensive nature of ANEPP, especially when combined with IDEA, all stand to benefit.

Policies which make Ugandan products more competitively priced and of international standards will make production and exporting more attractive, stimulate expansion and investment in the sector, and provide higher incomes to Ugandans.

Improved post handling and storage practices will benefit small scale farmers, the majority of whom are women, in several ways. Growers will not be forced to sell surplus maize and beans upon harvesting because of lack of proper storage facilities. They can store these crops in anticipation of favorable market prices, which will increase incomes. Also, improved storage capacity allows them to store these grains for their own families' needs. This will enable them to retain more of their cash income, since they will not be forced to purchase these grains toward the end of the season, when prices are high. When poor, rural women are able to earn more cash, they spend it on health needs and education expenses for their families.

VII. Financial Plan

ANEPP Summary Budget this amendment only $000

Component	Year 1	Year 2	Year 3	Total
A. PHHS Component	1,500,000	175.000	1,225,000	2,900,000
B. Venture Capital	2,300,000	300,000	-	2,600,000
C. VOCA T.A.	-	200,000	50,000	250,000
D. Proj. Mgt.	-	25,000	25,000	50,000
Total USAID funds	3,800,000	700,000	1,300,000	5,800,000

Summary Grant Budget

Element No.	Element Description	Previous Budget ($)	This Amendment ($)	New LOP Budget ($)
01	T. A., Spec. Acts, Training	1,200,000	3,200,000	4,400,000
02	Af. Proj. Dev Facility	200,000	- 0 -	200,000
03	Small Enterprise Assistance	80,000	- 0 -	80,000
04	Infrastructure (cold storage)	1,000,000	- 0 -	1,000,000
05	Support to EPAU UIA	2,820,000	- 0 -	2,820,000
06	Support UIA Bldg	200,000	- 0 -	200,000
07	Venture Capital	1,800,000	2,600,000	4,400,000
08	Audit	100,000	(60,000)	40,000
09	Evaluation	100,000	60,000	160,000
	Totals	7,500,000	5,800,000	13,300,000

VIII. Conditions and Covenants

Conditions Precedent:

This amended Grant Agreement between USAID and the Government of Uganda will contain a standard condition precedent to first disbursement relating to a signatory for the activities under the Post Harvest Handling and Storage component. The GOU will need to designate a signatory for that component from the Ministry for Agriculture, Animal Industries and Fisheries.

Covenants:

The GOU agrees to support the PHHS component of ANEPP by providing an office and working space for the ANEPP-funded long term advisor and short term advisors at KARI.

The GOU will designate a permanent professional senior staff member of KARI as the counterpart of the ANEPP funded advisors.

KARI will allocate existing PH Unit staff (both technical and administrative support) time to the activities and programs of the PHHS component.

NARO/MAAIF will provide, by secondment to KARI, additional technical and professional staff to meet the increased activities during the Life of Project.

Project Name : **ANEPP Amendment IV**
Est. Completion : **June, 95**
Date of Revision: **May,95**
Design Team : **J.Dunn, R.Rwampororo, C.Varley**

Narrative Summary (NS)	Measureable Indicators (OVI)	Means of Verification (MOV)	Important Assumptions
Goal: 1 Increased rural mens' and womens' incomes from agricultural exports.	1.1 For SELECTED sites and NTAEs the average $ value per producer	1.1 Case studies.	(Goal to Supergoal) 1 Not Applicable.
Purpose: 1 Increased the range and value of NTAEs by resolving public and private sector constraints to export promotion.	1.1 NTAEs reach $137.6 million by 1998 from $68.4 million in 1993. 1.2 Twenty NTAEs are earning more than $2 million each by 1998 from a total of nine in 1993.	1.1 Project records. 1.2 Statistics Dept./Customs of MFEP.	(Purpose to Goal) 1 Provided there are no adverse negative externalities to the social sectors.
Outputs: 1 Agricultural Production, marketing and export policy constraints alleviated. 2 Venture capital fund accessed by NTAE producers, processors and exporters. 3 i) Reduced post harvest losses. ii) Improve quality of tradeable grains.	1.1 # of policy studies initiated by EPAU, conducted and reviewed by the GOU and implimented by the various bodies. 2.1 i) # of NTAE ventures financed. Target: From 3 in 1995 to 10 by 1998. ii) Value of loans disbursed by gender. Target: From $1 million in 1995 to $2.5 million by EOP. 3.1 i) % of quantity lost in produce due to PHH. Target: Reduce losses by 30% by EOP. ii) % increase in export quality produce accepted on the market. Target: 90% by EOP	1.1 EPAU reports. 2.1 DFCU records 3.1 PHH data base Sample surveys FAQ specifications	(Output to Purpose) 1 World market price of NTAEs does not decline sufficiently to provide a disincentive to producers and exporters. The GOU continues to pursue supportive macro-economic policies. Favourable climatic conditions. Other production and marketing constraints addressed by other projects.
Activities: 1.1 Export,marketing and production policy studies conducted. Study findings presented to peer groups. Policy output mechanisms strengthened. 2.1 Provide support to DFCU to admnister the venture capital fund.	Inputs/Resources: $ million 1. EPAU 0.00 2. Venture Capital 2.60 3. Support PHH 2.90 4. VOCA 0.25 5. Mission Mgt 0.05 6. Monitoring, Evaluation 0.00	1.1 USAID/CONT MACS Reports. EPAU quartely reports. 2.1 USAID/CONT MACS report. DFCU quartely reports.	(Activity to Output) 1 EPAU, PHH, and DFCU operate efficiently. Workplans and Implementation issues adhered to.

Narrative Summary (NS)	Measureable Indicators (OVI)	Means of Verification (MOV)	Important Assumptions
3.1 Undertake research and extension. Transfer of technologies Farmer/trader training	------ 5.80 =======	3.1 USAID/CONT MACS reports. PHH records/surveys.	

Indefinite Quantity Contract LAG-4200-I-00-3059-00

Delivery Otder No. 8

POSTHARVEST HANDLING OF NON-TRADITIONAL AGRICULTURAL PRODUCE: UGANDA

(COMPONENT OF RE-DESIGNED ANEP PROJECT)

Prepared for:

United States Agency for International Development
Uganda

Prepared by

Ulysses A. Acasio
A. Rick Bennett (USAID)

April 17, 1995

GRIDEC
RICULTURAL DEVELOPMENT CONSULTANTS, INC.
S.W. 117 AVENUE, SUITE C-103 • MIAMI, FLORIDA 33186 • PHONE: (305) 598-5777 / FAX: (305) 598-5885

38

CONTENTS

ANNEXES	i
LIST OF TABLES	ii
LIST OF ACRONYMS	iii
ACKNOWLEDGEMENTS	iv
EXECUTIVE SUMMARY	v
SECTION	
I. PROBLEM TO BE ADDRESSED	1
A. Background	1
B. Study of Postharvest Handling of Maize and Beans	1
C. Postharvest Handling of High-Value Crops	2
II. RELATIONSHIP TO ANEP PROJECT PURPOSES	3
A. Goal of ANEPP	3
B. Postharvest Handling Component	3
C. Relationship of PHHS Project, ANEP and GOU	4
III. EXPECTED RESULTS	4
A. Summary of Expected Results of PHHS Project	5
B. Expected Results of Applied Research on Solar Drying	6
VI. DESCRIPTION OF ACTIVITIES	6
A. Major Activities under the PHHS Project	7
B. Key Technological Packages under PHHS Project	7
C. Target Districts and Project Sites	8
D. Baseline Information	8
E. Applied Research	9
F. In-Country Training Program	10
G. Field Trials, Demonstrations and Technology Transfer	11
H. External Training	12
I. Special Credit to Maize and Beans Farmers	13
V. IMPLEMENTATION PLAN	14
A. Proposed Organizational Chart	14
B. Implementation Time Frame	15
C. Support Requirements	15
D. GOU Inputs	21
VI. INSTITUTIONAL ANALYSIS OF IMPLEMENTING ORGANIZATIONS	21
A. The National Post-Harvest Program at Kawanda	21
B. Proposed Implementing Institution and Linkages	22

VII. MONITORING PLAN 23
A. Project Implementation Indicators 23
B. Proposed Implementation Matrix 23
C. End-of-Project Indicators 24

VIII. SOCIAL, CULTURAL, AND GENDER ISSUES 25

ANNEXES

ANNEX A - Scope of Work 27

ANNEX B - List of Contacts 31

ANNEX C - Quality Factors For Maize and Beans Used in Uganda 33

ANNEX D - References 35

ANNEX E - Equipment Specifications and Manufacturers 37

LIST OF TABLES

TABLE

1. PHHS Project Implementation Schedule 15

2 Technical Assistance Program for PHHS Project 19

3 List of Equipment and Supplies for PHHS Project 20

4. Year-End Implementation Indicators 23

47

ACRONYMS

ANEPP	Agricultural Non-Traditional Export Promotion Program
CARE	Cooperative for American Relief for Everywhere
CIAT	Centro de Investigacion de Agricultura Tropical
CIDA	Canadian International Development Agency
CIP	Centro International de Patata
DAO	District Agricultural Office
EEC	European Economic Community
EOP	End of Project
FAO	Food and Agriculture Organization of the United Nations
FFGI	Food and Feed Grains Institute
FON	Fruit of the Nile
GOU	Government of Uganda
HABITAT	Habitat for Humanity
ICRISAT	International Crops Research Institute for the Semi-Arid Tropics
IDEA	Investment in Developing Export Agriculture Project
IPM	Integrated Pest Management
IITA	International Institute of Tropical Agriculture
KARI	Kawanda Agricultural Research Institute
KSU	Kansas State University
LOP	Life of Project
MAAIF	Ministry of Agriculture, Animal Industry, and Fishery
MU	Makarere University
NARO	National Agricultural Research Organization
NGO	Non-governmental Organization
NRI	Natural Resources Institute
NTAE	Non-Traditional Agricultural Export(s)
PCV	Peace Corp Volunteer
PVO	Private Volunteer Organization
PH	Postharvest
PHHS	Postharvest Handling and Storage
TA	Technical Assistance
UK	United Kingdom
UNFA	Uganda National Farmers Association
UNDP	United Nations Development Program
USAID	US Agency for International Development

43

ACKNOWLEDGEMENTS

We would like to thank all the people who helped in various ways during the conduct of our work. Their inputs helped us formulate the basic concepts and ideas that went into this paper as well as allowing us to focus on salient points critical to achieving the goals and objectives of the ANEP Project.

Special thanks goes to Mr. Jim Dunn, Agricultural Projects Officer, ANR/USAID Kampala who not only provided guidance in the conduct of this work but also interacted with us during the preparation of this paper. We are also thankful to Ms. Rosem Rwampororo, Project Assistant and Economist, ANR/USAID Kampala, for her valuable suggestions in identifying end-of-project success indicators. Similarly, we appreciate the interactions with Kate Varley of USAID/Kampala and other members of the ANEPP re-design team.

Many thanks goes to the National Post-Harvest Team at the Kawanda Research Institute (KARI) for the several meetings we had with them to discuss the basic elements of this PHHS/ANEP project. Special thanks goes to Dr. Kagorora of KARI who provided a vehicle and driver and also accompanied us to visit their on-going postharvest projects in Western Uganda. Special appreciation is due Mr. Geoffrey Bockett of the Natural Resources Institute of the UK for providing insights on linkages and PH situation in Uganda. Similar appreciation is due Mr. Steve McCarthy, Director of the Peace Corps Volunteers in Uganda for his suggestions on how the Volunteers can be integrated both into the IDEA and ANEP Projects.

Lastly, we would like to thank all the farmers and traders we visited who directly and indirectly convinced us for the need of the postharvest handling component of the ANEP Project.

49

EXECUTIVE SUMMARY

This report is an implementation plan of the recommendations in the study by the Food and Feed Grains Institute (FFGI) of Kansas State University (KSU) to address the postharvest problems of maize and beans in Uganda. The implementation plan outlines four basic activities that will address the PH problems enumerated in the 1994 KSU report. These activities will be integrated with the overall implementation plan of the re-designed Agricultural Non-Traditional Export Promotion Project (ANEPP) of the USAID Mission in Uganda. This Postharvest Handling and Storage (PHHS) Project for maize and beans is designed to assist in achieving ANEPP goal of increasing the incomes of rural men and women farmers of Uganda. This will be achieved by increasing the range and value of Non-traditional Agricultural Exports (NTAE) in Uganda.

The four major activities under the PHHS component of the ANEP project will be: (1) identification, testing, and validation of PH technologies, (2) training of trainers from various organizations and agencies, (3) technology transfer, and (4) monitoring and evaluation.

The solution to the problems in the postharvest handling of maize and beans are readily available in Uganda as well as other developing countries. For this reason, the PHHS project will identify and test these technologies appropriate under Ugandan condition. At least three pilot districts will be selected where appropriate PH technologies will be demonstrated for possible adoption by targeted beneficiaries.

To implement the PHHS component of ANEPP, external technical assistance will be required in addition to the collaboration of the Kawanda Research Institute (KARI), as the lead institution, and other governmental and non-governmental organizations dealing with NTAE products. ANEPP will provide one long-term external advisor to be stationed at KARI who will be assisted by at least 4 short-term advisors during the first few months of project implementation.

The life of the project will be three years with approximate funding of US$3 million. At the end of the PHHS project, it would have reached at least 15,200 farmers, traders, and exporters in the selected districts and towns with 1/3 of them using any of the improved postharvest technologies promoted by the project. It would have also reduced by 50% current PH losses in the selected pilot areas. Furthermore, 75% of the maize and beans reaching traders and exporters would pass the minimum quality factors used in Uganda.

Finally, the PHHS project would have enhanced the capabilities of KARI and other governmental and non-governmental organizations to continue PH activities in Uganda beyond the life of the project.

POSTHARVEST HANDLING OF NOT-TRADITIONAL AGRICULTURAL PRODUCE

I. PROBLEMS TO BE ADDRESSED

A. Background

Major export crops of Uganda have traditionally been coffee, cotton, tea, and tobacco. However, because of a world surplus of these commodities and a resulting decline in demand, only coffee and tea remain as major export commodities in the agriculture sector in Uganda. To develop and expand its agricultural export base and generate foreign exchange, Uganda has undertaken a strategy of promoting non-traditional agriculture commodities to increase the range and value of exports.

Within Uganda's initiative for export diversification, maize and beans have become major commodity groups both in terms of tonnages produced and monetary value of exports. Available statistics show that between 1990 and 1993, the quantity of maize exported increased by nearly 400% while beans increased by 45%. Average national yields for these two crops are relatively low however. In addition to low yields, poor handling and storage practices after harvest have contributed to significant crop losses. Unless postharvest constraints are adequately addressed, the full potential for export of these crops will not be fully realized.

B. Study of Postharvest Handling of Maize and Beans

In August 1994, USAID/KAMPALA contracted with the Food and Feed Grains Institute (FFGI) of Kansas State University to undertake a study to assess postharvest losses and evaluate the quality of harvested and marketable grains, in particular, maize and beans. The FFGI study concluded that, on average, on-farm postharvest losses of maize and beans amount to 15% and 16% respectively. In monetary terms, these estimated losses of maize and beans exceeds US$18 million. The study also indicated that quality of maize and beans is substandard which further limits its export potential. Through extensive interviews and surveys, the FFGI study concluded that postharvest losses and the poor quality of maize and beans result from poor handling practices and inadequate storage resulting from:

1. Poorly dried grains with high moisture content at harvest.

2. Poorly ventilated, damp, and dark storage facilities leading to high relative humidity conditions.

3. lack of preventative practices for insect, rodent, and mold control in storage.

4. Improper threshing, shelling, and handling practices which result in undergrade, mixed and broken grain.

3. Evaluate the economic feasibility of any promising solar or biomass-heated dryer.

4. Develop local capability of replicating any drying technology that is economically and technologically viable or sustainable.

It is worth mentioning that the engineering parameters that apply to grains and chilies or mushrooms, for that matter, are similar. Hence, this sub-component has a perfect fit with the grain drying technology generation and testing efforts under the KARI/PHHS Project.

II. RELATIONSHIP TO ANEP PROJECT PURPOSE

A. Goal of ANEPP

The goal and purpose of ANEPP is to increase rural men's and women's incomes from agricultural exports and to increase the range and value of non-traditional exports in the agriculture sector. The Postharvest Handling and Storage (PHHS) of Non-Traditional (maize and beans) Produce component will work within the ANEP Project goal by increasing the incomes of key participants in the grains sector by improving the quality and quantity of harvested, stored and marketable NTAE such as maize and beans. The Postharvest Handling Component will support and function within the Agriculture & Trade Policy and the Export Promotion components of ANEPP to stimulate the increase of supply of maize and beans in support of the NTAEs. The ANEPP will also ensure fair and better chance of higher income from maize and beans by allowing farmers to safely store grains until prices are favorable. Problems in handling and storage of grains has usually meant that farmers must sell at harvest time when prices are at their very lowest. As a result, farmers often receive less for maize than their cost of production. The Grain Handling Component will address this constraint within the ANEPP framework.

B. Postharvest Handling Component

In addition to recent evaluations and amendments to ANEPP, USAID/UGANDA has designed the Investment in Developing Export Agriculture (IDEA) Project. Throughout the design of IDEA and the ANEPP evaluations, which included the FFGI study, USAID/UGANDA examined key issues seen as critical to successful implementation of both IDEA and the redesigned ANEPP. Postharvest handling of food grains was identified as a crucial and necessary area to meet Mission goals and objectives for agricultural and export development in Uganda. The Postharvest Handling and Storage of Grains Component is not only consistent with the goal and purpose of ANEPP, but also very supportive of the goal and purpose of IDEA. Implementation of the postharvest food grain component as part of the ANEP Project in collaboration with IDEA, will form a significant and impressive agricultural program that will contribute to the realization of the Mission's Primary Strategic Objective which is to increase rural men's and women's incomes. The relationship of ANEPP and IDEA, as well as the GOU's own agricultural

41

The PHHS project will result in greater cooperation and integration of numerous representatives from a broad range of disciplines involved in the postharvest sector. National postharvest training and extension capabilities will be enhanced. In addition, the PHHS component will facilitate farmer participation with extension staff, and assist project staff in identifying training priorities.

The impact of the PHHS Component on the overall goal and purpose of the ANEP Project will best be realized by an increase in the quality and quantity of maize and beans for both domestic use and external sale with less time devoted to handling and storage practices. The PHHS project will also impact farm-gate prices which farmers receive for their crops by allowing farmers and traders to properly store their grains until demand and prices rise at which time crops can be sold for greater profits.

A. Summary of Expected Results of PHHS of Maize and Beans Project

1. Increased involvement of small scale farmers (with extra emphasis on women farmers) in the use of improved postharvest technologies. At least 35% of the small-scale farmers in the target areas shall have adopted one technology or another.

2. Increased involvement of traders, farmer associations (large-scale farmers), processors and exporters in the use of postharvest technologies. A minimum of 100 large-scale farmers or members of farmers' associations should have adopted new postharvest technologies.

3. Greater quantity and improved quality of maize and beans reaching the market with standards acceptable to the importers. A minimum of 80 local traders and processors and 50 wholesalers of grain and grain products and 15 exporters shall be using improved PHHS technologies more specifically, drying, storage, quality maintenance, processing and general handling. Specific women groups will be encouraged to participate in this activity.

4. Decreased quantity of physical loss of maize and beans by 30 - 50 % from the current loss figures. This will be monitored through collection of baseline data in all postharvest systems before and at the end of the project.

5. Increased capability of the postharvest program at Kawanda to carry out research and technology transfer outreach programs through design and production of training programs and training materials. Selected extension staff (MAAIF, NGOs, PCVs, PVOs) in the target areas shall have been trained and be knowledgeable with improved postharvest technologies.

48

2. Training of trainers from MAAIF, NGOs, PVOs, and PCVs at Kawanda Research Institute or at alternative sites.

3. Technology transfer through information dissemination, field days, seminar-workshops, demonstrations, and field trials with end-user participation in its planning and implementation.

4. Monitoring and evaluation of the adoption rate and impact of PHHS technologies on end-users in particular and grain trade in general.

Technical consultations, seminars-workshops, and training sessions will be conducted between KARI staff, PHHS Project consultants, MAAIF Extension personnel, MU scientists, NGOs, PVOs, and target tech packages users. The KARI/PHHS team will organize training programs and develop training materials relating to the PHHS outreach program.

B. Key Technical Packages under PHHS Project

1. Timely harvesting, grain handling and management, proper shelling/threshing practices and appropriate equipment.

2. Grain drying methods such as two-stage drying, use of stable drying surfaces, fiber-reinforced PVC sheets, concrete drying floor, use of biomass fuel for artificial drying, and natural drying technique such as solar and use of narrow cribs.

3. Appropriate grain cleaning equipment for a particular targeted group in the grain postharvest channel.

4. Improved grain storage structures and storage practices at the farm level. This includes the use of naturally available grain protectants and approved chemicals for pest control.

5. Integrated pest management program at trader and exporter levels to maintain grain quality and loss prevention.

6. Determination of grain shrinkage after drying and cleaning, and the effect of ambient air on grains during storage. The financial implication of over-drying, broken grains, and other shrinkages due to molds and insects.

Promising maize and beans PHHS technologies for targeted beneficiaries, such as bean shellers or batch grain dryer shall be acquired from external sources if not available in Uganda. The collection of information on appropriate technologies shall be an initial activity of the Project.

Maize and beans production statistics in the target districts shall also be collected (other cereals may be included). This shall include number of farmers and a listing of current problems in PH handling and storage and extent of losses.

Statistics on volumes of grain handled by traders, wholesalers, and exporters shall also be collected including problems related to grain quality and quality maintenance. The Post-Harvest Program at Kawanda being a repository of PH information, shall collect and maintain this information.

Other technical and administrative offices in the target districts may also possess some relevant information for the project, such as activities by women's groups, may be evaluated for inclusion into the pool of data available at KARI. Once all the baseline information is gathered, it shall be compiled, analyzed, and interpreted by a qualified personnel of KARI or experts from Makarere University and other sources. The baseline output shall serve as a guide in the actual design and implementation plan of the PHHS outreach program.

E. Applied Research

Based on baseline information available, the KARI/PHHS Project will identify promising postharvest technologies that will meet the needs of targeted groups, i.e., farmers, traders, etc. Applied research work shall then be undertaken at the Kawanda research station or in any project site to establish the technology performance and acceptability. Once tested, an end-user validation program shall be done as this is very essential in ensuring the technology's adoption by targeted groups.

An important aspect of this activity is to develop the capability of the Post-Harvest Program personnel in generating, testing, and validating PH technologies thus enhancing sustainability after LOP. After successfully testing promising PH technologies at Kawanda, the KARI/PHHS Team shall collaborate with the MAAIF extension, and NGOs/PVOs in selecting the most appropriate technologies for widespread field trials and demonstrations. KARI/PHHS Project will prepare training materials for both field extension personnel, PCVs as well as for farmers and traders.

A working relationship shall be established between KARI, MU, PCVs, MAAIF Extension Service, farmers, traders, and processors in the transfer of appropriate PHHS technologies. Furthermore, a working agreement shall also be set up between the PHHS project and UNFA and PVOs such as CARE and HABITAT and Exporter Association for

50

G. Field Trials, Demonstrations and Technology Transfer

This activity will be the salient phase of the entire PHHS Project since the results will determine whether the overall ANEPP goals and objectives will be achieved. Its main thrust will be towards the adoption of appropriate PHHS technologies that will translate into better incomes for the targeted groups.

Field trials will take place either on farmers' fields or at trading centers within the target districts or alternative towns or cities. This activity will be a participatory approach involving extension workers and potential PHHS technology end-users. This activity is the initial step in the transfer and adoption of PHHS technology. It is very important for the PHHS Project team to take into account feedbacks from targeted groups in order to make the necessary adjustments or modifications of a given technology or equipment.

The field trials and demonstrations shall be used as a forum by which a given technology will be disseminated or transferred. Therefore, it is crucial that only proven technologies shall be demonstrated by the PHHS team. They should be technologies for which field staff are familiar with respect to their technical performance, economic viability and cultural and social acceptability. This implies that the technology being demonstrated should have been previously tested and validated in the area to have a greater probability of being adopted.

This activity shall be implemented through the leadership of KARI/PHHS Project staff in collaboration with MAAIF extension personnel, trainers from participating agencies (UNFA, PVOs, NGOs, PCVs) and even interested farmers or traders associations. These activities will be conducted throughout the life of the project.

Prior to field trials and demonstrations, a one-day seminar shall be organized for a target group to explain the benefits they will get from the technologies being demonstrated and how they can acquire it. Unless the intent and purposes of an activity is made clear, intended beneficiaries may shy away from such activities.

51

I. Special Credit to Maize and Beans Farmers

1. Short-term Loan

This sub-component of the PHHS Project is to provide credit to small scale farmers to assist in meeting their financial needs immediately after harvest. This credit will allow the small scale farmers to hold their maize and beans long enough until the price of maize or beans is favorable for them to sell. An alternative arrangement may be made for the loan agency to require a farmer to deposit his/her produce as collateral which may be sold on their behalf at a favorable time. This latter arrangement implies that the loan agency should have a warehouse and a trained grain storage manager to keep the produce from spoiling. Other USAID projects dealing with credit now in place in Uganda should be linked with this activity.

2. Medium-term Loan

A medium-term loan may also be made available to any farmer interested in acquiring any PHHS technology that will increase his/her productivity. Examples are hand-cranked sheller, rubberized tarpaulin, bean threshers, wheels to make wheel borrows, etc.

GV

B. Implementation Time Frame

Some project activities will be implemented sequentially while others may be implemented concurrently. Table 1 below shows the implementation schedule of various activities under the Postharvest component of the re-designed ANEP Project.

Table 1. PHHS Project Implementation Schedule

```
                                        Period in Years
                                  ------------------------------
   Activity                       0         1         2         3

(a) Contractor hired              --
(b) PHHS team on board            --
(c) Baseline collect/analyze        ----
(d) Tech Pack selection           --
(e) Tech Pack testing               --
(f) External training             --
(g) Extension staff trng            --
(h) UNFA, NGO staff trng              --
(i) Traders'technicians trng            --
(j) Field trials                          -- -- -- -- -- -- -- --
(k) Seminar-Workshops                 --    --    --    --
(l) Demonstration and
    technology transfer                 -- -- -- -- -- -- -- -- --
(m) Project Evaluation                            --            --
```

C. Support Requirements

Support requirements are in six categories: (i) transports/ vehicles, (ii) training equipment, (iii) research and outreach equipment, (iv) administrative support, (v) expendable supplies, (vi) and external technical assistance. The total projected funding for the above support categories will be approximately US$3M.

1. Transports/Vehicles

The travel schedule involved in the implementation of this project is intensive. It will require the following equipment and materials to effectively carry out the program.

At the KARI/PHHS Project headquarters, the ANEPP will provide (a) two four-wheel-drive, double cabin pickup trucks; one will be for use of the PHHS advisors and the second will be for use of KARI staff in performing their duties under PHHS Project.

In each of the three targeted districts ANEPP will provide at least (b) one four-wheel-drive, double cabin pick-up truck for use at the district level by trainers either

53

ensure the sustainability of Tech-Pack generation, testing, and dissemination beyond the LOP.

Some funds will also be allocated to support applied research assigned by KARI to selected post-graduate students from either the Departments of Food Technology or Agricultural Engineering at Makarere University. The research project will focus on specific PH problems and/or issues relevant to achieving ANEPP goals and objectives. This will include some funds for the testing of drying technology for high value crops like chilies and mushrooms. Some work is already being done on solar drying of fruits and vegetables at KARI. The researchers have developed some solar dryer designs which have been distributed in some parts of Uganda for field trials.

A survey of solar drying technology available in Uganda was done by Michael Tsamparlis in April 1994. The survey concluded that there are a number of solar dryers now in use by small scale producer-processors of dehydrated fruits. The report further stressed the need for a commercial size fruit solar dryer and the author proposed some design concepts. The author also did some solar drying trials at KARI while in Uganda.

Meanwhile, the Fruit of the Nile (FON) Company claims to have developed and distributed over a hundred solar-heated natural convection-type fruit driers in many sites all over Uganda. The organization also claims to have successfully exported about 10 tons of dried fruits to Europe in 1994 with an "environmentally friendly" label.

Taking into consideration the above status of solar drying technology in Uganda, the proposed developmental work at KARI will focus on commercial solar drying of high-value NTAE products. It will also focus on the use of biomass energy either as a supplemental or primary source of heat for drying high-value NTAE products. The use of biomass energy will allow producers to dry high-value crops even during inclement weather conditions.

4. Administrative and Other Support

Additional project resources will be set aside to enhance productivity of technical and non-technical staff under the KARI/PHHS Project. This support will include three desktop computers and printers and three notebook computers each with dot matrix slimline printers. Budgetary provision will also be set aside to support subsistence allowance for project staff as well as staff from participating agencies and institutions while implementing project activities in the target areas.

54

- Two person-month of a stored grain entomologist to work with the agricultural engineer and the KARI PH Team. The advisor will help set up an integrated pest management (IPM) strategy for traders, training program, and selection of improved storage systems and storage practices at all levels.

- Two person-months for a pathologist with experience in aflatoxin and other carcinogenic causing molds. The advisor will assist in the development of local capability in mold and mycotoxin assessment and monitoring strategy and also assist in developing grain handling procedures to reduce the risk of aflatoxin contamination of maize and beans.

Table 2. Technical Assistance Program for PHHS Project

	YEAR 0	1	2	3
1. Long-term consultant (36 person-months)	----------	----------	----------	----------
2. Agricultural Engineer (4 person-months)	----			
3. Food Processing Engineer (3 person-months)	---			
4. Grain Storage Specialist (2 person-months)	--			
5. Pathologist (mycology) (2 person-month)	--			

D. GOU Inputs

As a condition for placing this ANEPP component at KARI, the GOU should provide the following inputs:

1. Designate a permanent KARI senior staff as key person to work as counterpart of PHHS Project advisors and to assist in the design and implementation of PHHS programs to meet ANEPP goals.

2 KARI will allocate existing PH Program staff time to devote on PHHS Project activities. Specifically the technical unit and administrative support staff. Additional professional and technical staff must be seconded by NARO/MAAIF to meet increased activities at KARI.

3. The GOU will also provide an office and working space for the PHHS Project advisor and support staff. All support provided to KARI should be aimed at making the PHHS Program sustainable after LOP.

VI. INSTITUTIONAL ANALYSIS OF IMPLEMENTING ORGANIZATIONS

A. The National Post-Harvest Program at Kawanda

The Kawanda Research Institute (KARI) is the lead institution dealing with postharvest research on agricultural crops through its National Post-Harvest Program. Administratively, it is under the umbrella of the National Agricultural Research Organization (NARO) which in turn is under the Ministry of Agriculture, Animal Industries and Fisheries (MAAIF). The KARI PH Program is composed of 11 professionals, half have research orientation, while the other half have extension background. The PH Program's history goes back to 1987 when it had the first postharvest project funded by the Food and Agricultural Organization (FAO) of the UN. Currently, the National Post-Harvest Program at KARI is comprised of the following disciplines and staffing:

1. Pathology
   - Ph.D. - (one, NARO)
   - BS Agriculture - (one, EEC)
   - Technician - (one, UNDP)

2. Entomology
   - MSc - (one, NARO)
   - M Phil - (one, NARO)
   - Technicians - (two, 1-EEC, 1-UNDP)

56

ARTICLE III - STATEMENT OF WORK

A. General

The Contractor will provide a technical specialist to participate in the redesign of the ANEPP and to prepare a part of the documentation that will serve as the substantive basis for the PP revision. The Contractor will work cooperatively with any other personnel who may be provided by USAID to work on the design process. USAID has scheduled REDSO and USAID/W personnel as well as other Contractor personnel to participate. The documentation prepared by the Contractor will present a focused and detailed plan of project assistance to address the components of the project identified above and which will accomplish objectives related to the project purpose. The Contractor will be expected to examine alternative approaches and provide a recommendation and justification for the preferred option.

The Contractor will be required to present a final draft document to USAID/Uganda and the Government of Uganda representatives prior to departing Uganda. Additionally, the Contractor will meet with Mission and GOU representatives on a regular basis to discuss progress and to present issues for discussion and resolution.

A copy of the current PP and other relevant documents such as studies of Food Security in Uganda; Uganda Export Policy and Investment Promotion Options Under ANEPP; the 1993 ANEPP Evaluation; and the KSU Post Harvest Study will be provided. Numerous other documents relevant to the redesign will be identified for the contractor.

B. Contractor will provide a Post Harvest Food Production Specialist with the following qualifications and responsibilities:

- The individual responsible for this task should have a good understanding of both field level issues as well as marketing and export promotion. African experience is preferred.

- An analysis of the magnitude of the problem of post harvest handling of grains (maize and beans) has been carried out. The Post Harvest Specialist will be responsible for a review of already completed work and the preparation of a specific plan of action for the handling of grains (maize and beans) from field to market, complete with resources required.

- This will entail a review of relevant documentation dealing with non-traditional agricultural exports and constraints impacting on the objectives of increasing the range and value of NTE's. And work with institutions and donor organizations working in the area of post harvest handling of grains.

VII. MONITORING PLAN:

A. Project Implementation Indicators:

To be able to address the significant problems that exist in maize and bean conditioning and maintaining quality in storage, a three year time frame will be required in which conditions will be created to extend appropriate technology and training to the intended beneficiaries. The assessment of success of the project and progress achieved to that goal will, in part, depend on a series of implementation indicators. The following implementation indicators will be charted by the implementing agency in collaboration with technical assistance support from the participating institutions. Information on progress and achievements will also be collected from external sources and feedback from project beneficiaries.

Given the need to quickly develop the outreach capabilities required in this project, annual benchmark will best serve the project needs. The indicators may need to be revised slightly to reflect actual progress of project activities in reaching beneficiary groups as well as to reflect potential changes between groups in acceptance of improved postharvest practices. In this manner, progress by group can be charted over time and the difference in technology adoption by different groups can be analyzed and solutions identified as to why the project is not succeeding with certain targeted beneficiaries.

B. Proposed Implementation matrix

Table 4. Year-End Implementation Indicators

Client Groups Reached:	Year-end Implementation Indicators YEAR		
	1	2	3
Small to Medium-Scale Farmers			
3 targeted districts	15,000	15,000	15,000
% of Farmers	10	20	35
Number of farmers	1,500	3,000	5,250
Commercial Farmers (>30 hectares)	25	50	100
Processors, Traders/Exporters	35	80	145

The above farmers and local traders will be expected to participate in seminar-workshops, trials and demonstrations in farmer training centers at the selected districts. Meanwhile, the major maize and beans wholesalers, exporters, and processors will be expected to attend similar activities in Kampala or another city in Uganda.

Indicators

At least 50% and 75% of maize and beans reaching the domestic market would pass the minimum quality factors used in Uganda after 18 months of LOP and 75% at EOP. Meanwhile, the current PH losses would be reduced by 30% and 50% after 18 and LOP.

Output 5.

Availability of commercial solar/biomass heated drying technology for high-value crops such as chili and mushrooms.

Indicator

At least one prototype biomass/solar-heated dryer for commercial scale high-value crop processor shall have been tested and being used by five producers and processors.

Output 6.

Commitment of GOU to sustain PHHS technology transfer.

Indicator

An expanded National Postharvest Program developed with GOU allocating and committing human, material, and financial resources to sustain such program.

VIII. Social, Cultural, and Gender Issues

During the past three decades since attaining political independence, the Ugandan economy has largely remained agriculturally based with the bulk of its foreign exchange earnings coming from export of traditional crops such as tea and coffee, sold on the world market and hence vulnerable to international market conditions. The traditional exports are faced with an uncertain market and cannot be relied upon. The agricultural export base diversification strategy being pursued and implemented by the Uganda government has resulted in the promotion of non-traditional export crops. Maize and beans are being exported to the regional market involving Uganda's neighbors. During the same time, the Uganda government has also focused resources on the food security of its population.

Food security in Uganda is based on the availability at the farm level of starchy products such as cassava, sweet potatoes, maize, and millet, with beans being a major source of protein in addition to animal proteins. It is worth noting, therefore, that only excess maize

ANNEX A

SCOPE OF WORK

ANNEX B

LIST OF CONTACTS

ANNEX B

LIST OF CONTACTS

1. Dr. J. P. Kagorora, Acting Head, National Post-Harvest Program, Kawanda Agricultural Research Institute
   Mr. Ambrose Agona, Entomologist, KARI Post-Harvest Program
   Mr. Mutyaba Cedric J., Agric. Engineer, KARI P-H Program
   Mr. W. Odogola, Agricultural Engineer, KARI P-H Program
   Ms. Constance Owori, PH Technologist, KARI, P-H Program

2. Mr. Daniel Wanzala, Chairman, Masindi Grain and Seed Growers Association, Masindi District.

3. Mr. John Baptist Mubiru
   Director, MAAIF Extension, Entebbe

4. Mr. Geoffrey Bockett
   Fruits, Vegetables, and Root Crops Specialist, NRI, UK

5. Mr. Jens E. Kristensen
   Extension/Training Adviser, Uganda National Farmers Asso.

6. District Agricultural Officer, Masindi

7. Ms. Gudo Ahluwalia, Managing Director
   Ankole Unga, Ltd, Mbarara

8. Mr. Steve McCarthy, Director, Peace Corp Volunteers/Uganda

9. Mrs. Teddy Munyazikuye, District Agricultural Officer, Kasese
   Mr. Wandera Lamecka, Asst. Agricultural Officer, Kasese
   Mrs. Sanyu Alice, District Agriculture Office, Kasese

10. Mr. Franco K. Katsuba, HABITAT, Kasese

11. Mr. Bikwasizeh K. Deus, Manager, Uganda Seed Project, Kasese
    Mrs. Rose Gahakwa, Uganda Seed Project, Kasese

12. Mr. Wycliffe O. Mangheri, Contract Seed Grower, Kasese

13. Mr. Henry Mutebi Kityo, Chief Exec. Officer, UNFA
    Mr. Z. B. Tumukunde, Secretary General, UNFA

ANNEX C

QUALITY FACTORS FOR MAIZE AND BEANS USED IN UGANDA

ANNEX C

Table C1. Kenya National Crops and Produce Board (NCPB) Fair Average Quality (FAQ) Specifications for shelled Maize.

Defects	FAQ Limits (% Maximum by Wt)	
	Open Stored Grain	Bulk Store Grain
Foreign matter	1.0	1.0
Broken grain	3.0	2.0
Insect damaged grain	6.0	4.0
Rotten, diseased, discolored	3.0	2.0
Total defective grain	8.0	5.0
Moisture content	13.5	12.5

Source: NCPB as cited by Prof. Mark O. Odhiambo in EPADU Report: Opportunities, Constraints, and Possible Solutions to Improve the Access of Uganda Maize and Beans to Kenyan Market, March 1994.

Table C2. Produce Marketing Board (PMB) and World Food Program (WFP) Quality Standard Specifications in Uganda.

Defect/Damage	Maximum, %			
	PMB (1974)		WFP	
	Maize	Beans	Maize	Beans
Moisture	15.0	15.0	15.0	15.0
Foreign matter	1.0	1.0	1.5	1.5
Insect damaged grain	0.8	0.8	--	4.0
Diseased and discolored	4.0	4.0	4.0	3.0
Broken, split, & shrivelled	2.0	3.0	2.0	3.0
Total damaged	6.8	7.8	6.8	7.8
Hectoliter weight, Kg.	68/70	--	68/70	--

Source: Prof. Mark O. Odhiambo in EPADU Report: Opportunities, Constraints, and Possible Solutions to Improve the Access of Uganda Maize and Beans to Kenyan Market, March 1994.

ANNEX D

LIST OF REFERENCES

ANNEX D

REFERENCES

1. Acasio, U.A. and R. Borsdorf. 1994. Postharvest Handling of Maize and Beans in Uganda. Technical Assistance Report No. 138, Food and Feed Grains Institute, Kansas State University, Manhattan, Kansas.

2. Sergeant, A. and J. Macartney. 1993. Opportunities for Non-Traditional Agricultural Exports from Uganda, Vol. 4 - Cereals, Beans and Oil Crops (EPADU). International Science and Technology Institute, Inc., Washington, D.C.

3. Kristjanson, P. et al. 1992. Uganda Non-traditional Export Commodity Rapid Appraisal (Final Draft). USAID Agricultural Marketing Improvement Strategies Project. Abt Associates, Inc., Postharvest Institute for Perishables, University of Idaho, and Deloitte & Touche, Inc.

4. Herlehy, Thomas J. 1992. New Approaches to Growth: Systemic Development of Agricultural Marketing in Uganda. U.S. Department of Agriculture, Office of International Cooperation & Development, Washington, D.C.

5. Riley, Barry. 1994. Food Security in Uganda, EPADU Report. International Science and Technology Institute, Inc., Washington, D.C.

6. Uganda Post Harvest Handling of Maize and Beans Project. Project Paper (Draft). USAID Mission, Uganda. December 1994.

7. IDEA Project Data Sheet, USAID Mission, Uganda. September 28, 1993.

8. Tools for Agriculture: A Buyer's Guide to Appropriate Equipment. Third Edition. I.T. Publications in association with GTZ/GATE, 1985.

9. Odhiambo, Mark, O. 1994. EPADU Report: Opportunities, Constraints, and Possible Solutions to Improve the Access of Uganda Maize and Beans to Kenyan Market.

10. Tsamparlis, Michael. 1994. A Review of Solar Dryers in Uganda and Proposal for Further Development. EPADU Report. International Science and Technology Institute, Inc. in Association with: High Value Horticulture Plc. Uxbridge, United Kingdom.

ANNEX E

EQUIPMENT SPECIFICATIONS AND MANUFACTURERS

TOOLS FOR AGRICULTURE

A buyer's guide to appropriate equipment

Introduction by Ian Carruthers

Third Edition

I.T. Publications *in association with*
GTZ/GATE • 1985

68

Intermediate Technology Publications Ltd.
9 King Street, London WC2 8HW, UK

This edition of *Tools for Agriculture* has been assembled by a team led by Patrick Mulvany, Agriculture Officer of ITDG. The team drew on help and advice from a large number of individuals and organizations; it has not been possible to thank or acknowledge them all in the Acknowledgements on page vii, and the compilers, and the publishers, would therefore like to record here their general thanks for all assistance given.

© Intermediate Technology Publications 1985

Tools For Progress — first published 1967
Tools For Agriculture — first published 1973
2nd edition 1976
Reprinted 1979
Reprinted 1981
3rd edition 1985

Cover photograph copyright Oxfam/Jeremy Hartley

ISBN 0 946688 36 2

Printed by the Russell Press Ltd, Gamble Street, Nottingham NG7 4ET, UK

69

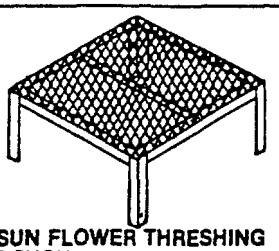

SUN FLOWER THRESHING BENCH

Designed to reduce the time and labour requirements involved in conventional threshing methods. The bench is fabricated from M.S. angle pieces and wire mesh.

ANDHRA PRADESH AGRICULTURAL UNIVERSITY
Rajendranagar
Hyderabad 500 030
INDIA

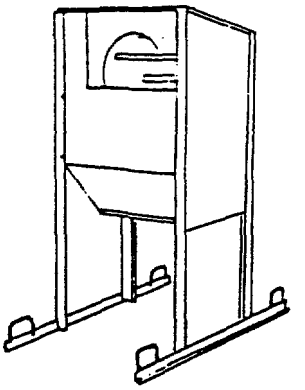

N'DOFFANE GROUNDNUT POD-STRIPPER

This hand-operated groundnut thresher consists of a system of wooden beater bars rotating in a body constructed from angle iron and steel sheet. A table is normally supplied for feeding in the plants. The deflecting sheet is fitted around the beater to allow the nuts to be collected under the machine. The capacity is approximately 200kg/h. The N'Doffane is particularly suitable for stripping undried confectionery groundnuts.

SISMAR
B.P. 3214
20 rue Dr. Theze, Dakar
SENEGAL

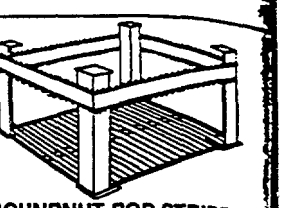

GROUNDNUT POD-STRIPPER CUM PADDY THRESHING BENCH

The goundnuts are drawn against the comb, stripping the pods from the plant and leaving the nuts in the hands of the operators. The device can be inverted so that the grill is uppermost, and used as a paddy thresher.

ANDHRA PRADESH AGRICULTURAL UNIVERSITY
Rajendranagar
Hyderabad 500 030
INDIA

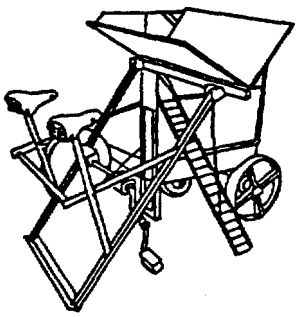

BICYCLE-TYPE THRESHERS

A quite efficient manual threshing method is employed by machines based on the bicycle. One or two operators are required to feed the hopper while providing the power, via a V-pulley, to the threshing mechanism.

THE MINI 'R' PEDAL THRESHER This is suitable for rice and most other cereals (optional accessories available for sorghum). The unit is operated by 2 men. A sloping sieve at the discharge point helps separate the straw from the grain which can be collected in a shallow skip or sheet. The thresher is equipped with twin wheels and has an output of up to 200kg/h.

THE MINI 'M' PEDAL THRESHER This model (illustrated) is similar to the Mini 'R' but designed specifically for threshing millet. This is achieved through rubber beaters operating against steel concave bars over heavy gauge perforations. Output is up to 100kg/h.

Both the Mini 'R' and Mini 'M' threshers may be equipped with a motor, and are available from:

ALVAN BLANCH DEV. CO. LTD.
Chelworth
Malmesbury, Wilts. SN16 9SG
U.K.

THE MIDC PEDAL THRESHER Powered by one person, this implement was developed by the Metal Industries Development Center (MIDC) using locally available materials. It has a total weight of 38kg and an optimum pedal speed of 65rpm.

METAL INDUSTRIES DEV. CENTER
Jalan Sangkuriang 12
P.O. Box 113, Bandung
INDONESIA

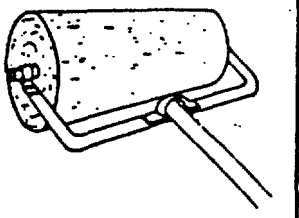

STONE THRESHING ROLLER

This threshing roller is tapered so that it can easily be pulled round in circles over the crop by animals.

DANDEKAR BROTHERS
Sangli-Shivaji Nagar, 416 416
Maharashtra
INDIA

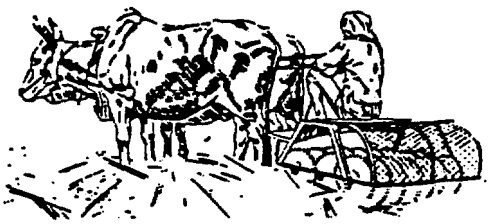

ANIMAL-DRAWN OLPAD THRESHER

This machine comprises serrated discs of 450mm diameter mounted on a steel shaft, and held in position by cast iron spools. The frame is of angle iron and includes a seat with foot and back rest for the operator. Back and front safety guards eliminate the risk of injury to the operator. The harvest is spread on the threshing floor and the machine is drawn round and round, thus separating the grain. An extra raking attachment can be fitted for stirring the straw during the threshing operation. The thresher is available in 20, 14, 11, and 8 disc sizes, weighing 190kg, 125kg, 110kg, and 92kg respectively. Capacity ranges from 350-850kg/day, according to the size of the thresher.

COSSUL & CO. PVT. LTD.
123/367 Industrial Area
Fazalganj, Kanpur, U.P.
INDIA

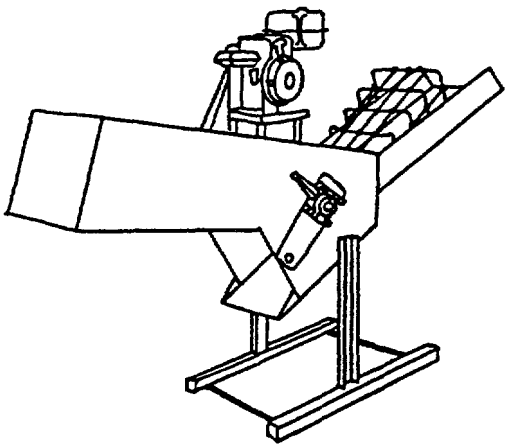

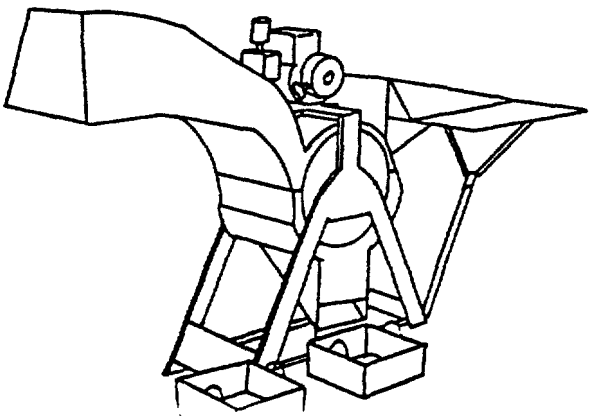

VOTEX RICE FAN

The Votex Rice Fan comprises 30 fan blades and 6 beater bars, collecting trays enabling easy bagging, and a simple v-belt drive suitable for any petrol engine of 3.5-5hp. The Rice Fan can also be fitted with a diesel engine. In this case, a detachable sub-frame, with silent blocks to absorb the extra vibration, and an engine guard can be supplied. The overall weight of the standard model is 127kg; the diesel model weighs 200kg. Although, as its name suggests, the Votex Rice Fan was developed as a rice thresher, with minimal adjustments it can also be used for threshing various other crops such as wheat, barley, oats, cowpeas, sorghum and soybeans.

VOGELENZANG ANDELST B.V.
Postbus 1, 6673 ZG Andelst
Wageningsestraat 30, 6673 DD
HOLLAND

WATKINS NAYLER & CO. LTD.

ATS MIDGET THRESHER MKII A

Suitable for threshing wheat, barley, oats, beans, peas, sorghum, maize and rice, the Midget consists of a 6 beater, rasp bar drum with sealed bearings. The construction is of heavy plate with a lightweight feed chute and discharge hood over a simple fixed grid straw separator and grain chute. The power required is 3hp and capacity is up to 500kg/h for dry wheat. The overall weight is 127kg. Various concave attachments are available for maize, groundnuts and sorghum, including an extra pulley to reduce the drum speed. A screen separator is also available. Alvan Blanch produce a wide range of threshers, including the larger Master Midget which can be used as a peg drum thresher as well as a rasp bar, making it ideal for threshing high quality rice.

ALVAN BLANCH DEV. CO. LTD.
Chelworth
Malmesbury, Wilts. SN16 9SG

10

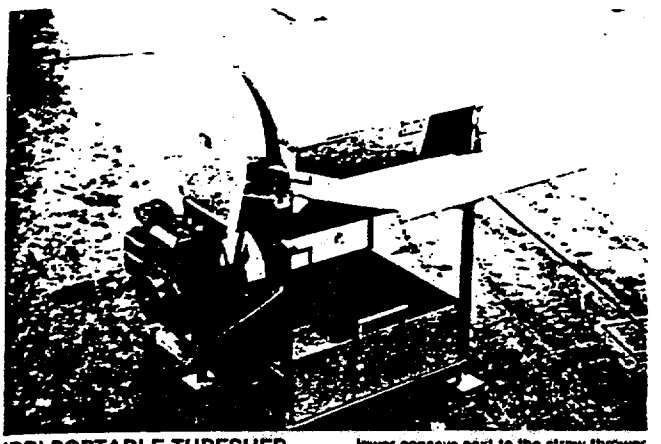

IRRI PORTABLE THRESHER TH6

The IRRI portable thresher consists of a metal frame, a pegtooth cylinder with straw throwing paddles on one end and enclosed by a cover with spiral louvres, and a wire mesh or round rod lower concave. A feeding tray, fan for winnowing, removable handle bars for transport and a 5hp petrol engine complete the unit.

Material is loaded onto the tray and fed into the opening between the cylinder and the lower concave. The pegs from the threshing cylinder hit the material, separating the grain from the straw, and at the same time accelerating them around the cylinder. The majority of the grain is threshed during the initial impact but further threshing is performed while the material moves axially until the straw is discharged at the opposite end. Threshed grain including impurities such as leaves and short pieces of straw, pass through the openings in the lower concave where it is cleaned by the winnowing fan. Threshing and separation losses are minimized by the cut-off wall installed at the end of the lower concave next to the straw thrower and by the stripper bars opposite the feed opening. The cut-off wall prevents grain from going into the straw thrower while the bars cut long straw for ease in axial movement and prevent straw from wrapping around the cylinder during threshing.

Some models of this thresher provide a door in the top cover for hold-on threshing. This threshing method is used in areas where the straw is used for mat and basket weaving. The door is raised and locked in place thereby exposing the entire cylinder length to hold-on threshing.

- power: 5hp engine
- weight (with engine): 105kg
- length: 95cm
- width (with feed tray folded): 76cm
- height (with feed tray folded): 138cm
- capacity: up to 600kg/h (rough rice)
- separation recovery: 98% (weight basis)
- grain purity (without cleaning screen): 94%
- grain breakage: less than 2%
- cylinder: pegtooth, 30.5cm O.D. 71.1cm length
- construction: all steel
- cylinder: 600-630rpm
- fan engine speed
- labour requirement: 2-3 men
- fuel consumption (approx): 1 litre/h

BORJA MACHINE SHOP
Sgt. de Roma St.
San Pablo City, Laguna
PHILIPPINES

C & B CRAFTS
Maginao, San Rafael, Bulacan
PHILIPPINES

FRECOSA METALCRAFT
San Juan, Calamba, Laguna
PHILIPPINES

GINTONG ANI METALWORKS
Cainta, Metro Manila
PHILIPPINES

ISAROG INDUSTRIES
826 Renacimiento St., Tabuco
Naga City, Camarines Sur
PHILIPPINES

JCCE INDUSTRIES
242 Mayondon
Los Banos, Laguna
PHILIPPINES

KATO INTERNATIONAL
92 P. Santiago Street, Malinta
Valenzuela, Metro Manila
PHILIPPINES

KAUNLARAN INDUSTRIES
Calamba, Laguna
PHILIPPINES

L.P. ENGINEERING SERVICES
San Jose, Baliwag, Bulacan
PHILIPPINES

MECHANICAL FACTORS INC.
Ground Floor
Greenhills Dev. Bldg.
710 Shaw Blvd. Mandaluyong
Metrol Manila
PHILIPPINES

P.I. FARM PRODUCTS
KM 16, Malanday, Valenzuela
Metro Manila
PHILIPPINES

POYING'S WELDING SHOP
262 National Hi-Way
Brgy. Anos, Los Banos, Laguna
PHILIPPINES

SABIO AGRICULTURAL EQUIPMENT
Magarao, Camarines Sur
PHILIPPINES

TECHNO-ADAPTORS INC.
San Isidro
San Fernando, Pampanga
PHILIPPINES

A1 ENTERPRISES
Luna St., La Paz, Iloilo City
PHILIPPINES

APEX FARMERS' SUPPLY
143 Burgos St., Tacloban City
Leyte
PHILIPPINES

BETSY MARKETING
Huervana St., La Paz
Iloilo City
PHILIPPINES

CARVEL ENGINEERING WORKS
Km. 1, Roxas City, Capiz
PHILIPPINES

JAMANDRE INDUSTRIES
88 Rizal St., La Paz
Iloilo City
PHILIPPINES

JASPE METALCRAFT
Evangelista St., Pavia
Iloilo City
PHILIPPINES

MB ENTERPRISES
IPSTA Bldg. La Paz
Iloilo City
PHILIPPINES

V&L AGRICULTURAL MACHINERY
Rizal St., La Paz
Iloilo City
PHILIPPINES

PETE LIMS ENTERPRISES
San Francisco, Agusan del Sur
PHILIPPINES

TRYME AGRO-INDUSTRIES
Lumbia, Pagadian City
PHILIPPINES

ALPHA MACHINERY & ENGINEERING CORP.
P.O. Box 579 MCC
Makati, Metro Manila, D708
PHILIPPINES

F. BUENACOSA REPAIR SHOP
Tacurong, Sultan Kudarat
PHILIPPINES

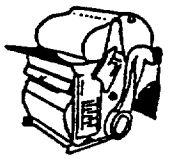

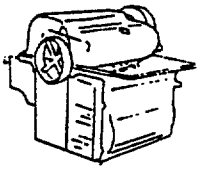

CECOCO THRESHERS

POWER THRESHER The Cecoco power thresher (illustrated above left) is available in three sizes. The L-15 requires 0.5hp, and has a capacity of 300-350kg/h. It has a width of 45cm. The L-18 is 54cm wide, with a capacity of 400-450kg/h and a power requirement of 0.5hp. The L-20 is 60cm wide, and has a capacity of 500-550 kg/h and a power requirement of 1hp.

UNIVERSAL THRESHER The universal thresher (illustrated above right) is a larger model than the power thresher above, with a width of 75cm and a power requirement of 2-4hp. It is suitable for threshing various kinds of beans and other pulses, rice and wheat, and features interchangable screens for different sizes of grain. The speed can be adjusted by changing the V-belt pulleys between the threshing drum and winnower. The universal thresher has a capacity of 1500kg/h for beans, and an overall weight of 120kg.

CECOCO
P.O. Box 8
Ibaraki City, Osaka 567
JAPAN

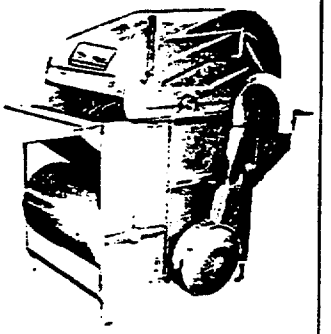

AKSHAT AND AMUDA SEMI-AUTO THRESHERS

American Spring and Pressing Works and Rajan Universal Exports both produce a similar semi-auto, multipurpose thresher. It consists of a threshing chamber, separator, dust discharging device, and a grain conveying and elevating mechanism. The threshing chamber contains a drum with 40 steel wire loops and a concave grill. The heads of grain are inserted into the threshing chamber, where the revolving drum combs out the grain which falls through the grill into the winnowing chamber. Clean grain is raised by the elevator for bagging. The semi-auto thresher has a power requirement of 2hp and a capacity of 200kg/h (rice).

AMERICAN SPRING & PRESSING WORKS PVT. LTD.
P.O. Box 7802
Adarsh Housing Society Road
Malad, Bombay 400 064
INDIA

RAJAN UNIVERSAL EXPORTS (MFRS.) PVT. LTD.
'Raj Buildings'
162 Linghi Chetty Street
Post Bag 250, Madras 600 001
INDIA

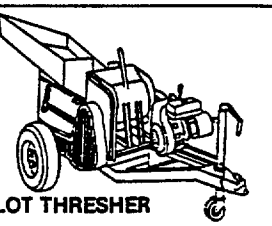

PLOT THRESHER

This small thresher was specially developed for threshing different grains in experimental plots. It incorporates a special air device which enables the operator to adjust the air flow ensuring efficient separation of the chaff from the seed. The engine requires 7hp, and the overall weight is 480kg. The thresher is equipped with two tyred wheels and tow bar.

SWANSON MACHINE CO.
20-26 E. Columbia Avenue
Champaign, Illinois 61820
U.S.A.

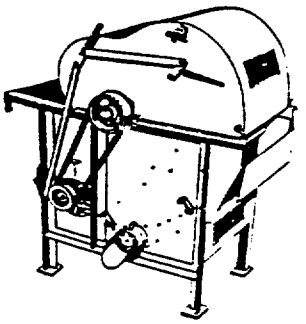

BENAGRO PADDY-CUM-WHEAT THRESHER 5PW

This machine consists of an all-steel body fitted with a threshing cylinder, screw grain conveyor and a winnower for cleaning. It has an extra threshing bar attachment and blower driver pulley for wheat and paddy. The crop bundle is held with both hands and the heads inserted between the rotating cylinder loops and the concave screen. The separated grain falls through the screen and is cleaned by the winnowing action of air from the blower. The clean grains are finally delivered by means of the screw conveyor to the bag attached to the delivery spout. This machine has a power requirement of 3hp (electric motor) or 5hp (engine), and a capacity of 100-250kg/h for paddy, and 80-125kg/h for wheat.

WEST BENGAL AGRO-INDUSTRIES CORPORATION LTD.
238 Netaji Subhas Road
3rd Floor, Calcutta 700 001
INDIA

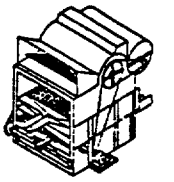

POWER-OPERATED CASTOR THRESHER

Consisting of a teak wood cylinder and concave, a feed hopper, a blower, and a 3-sieve assembly. The perforated sheet at the bottom allows sand particles, weed seeds etc. to be sieved out of the shelled castor beans.

ANDHRA PRADESH AGRICULTURAL UNIVERSITY
Rajendranagar
Hyderabad 500 030
INDIA

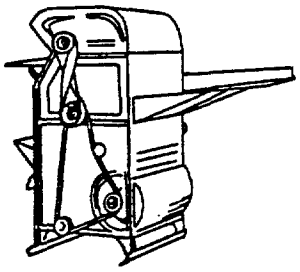

TB60 DOUBLE THRESHER

The TB60 thresher has double husking rollers and knife-shaped gears. The knife-shaped gears fixed onto the rotating rollers interact with bow-shaped gears fixed onto the concave board in order to comb and thresh the grains. The threshed grain falls through the gaps while the stalks are thrown upwards by the rotary action of the roll bar. The TB60 has a power requirement of 6-8hp (diesel engine) and 6-7hp (electric motor). It has a capacity of 400-600kg/h for wheat, and 800-1200kg/h for rice, and is suitable for threshing all kinds of large grains. The overall weight is 235kg.

CHINA NATIONAL AGRICULTURAL MACHINERY
Import and Export Corporation
26 South Yeutan Street
Beijing
CHINA

THRESHERS

YANMAR DOUBLE DRUM PADDY THRESHER This rasp bar thresher has a power requirement of 7hp and a capacity of 900-1000kg/h. It weighs 169kg.

P.T. YANMAR AGRI M/G (P.T. YAMINDO)
42 Jl. Ir.H. Juanda
P.O. Box 4135/JKT, Jakarta
INDONESIA

AR 500 A AND AR 1000 A Both threshers have two rasp bar threshing drums. Power requirement is 5 and 8-10hp, capacity 500kg/h and 1000kg/h respectively. The AR 500 A weighs 113kg, the AR 1000 A, 177.5kg.

P.T. AGRINDO
Desa Bambe Kab. Gresik,
Jawa, Timur
INDONESIA

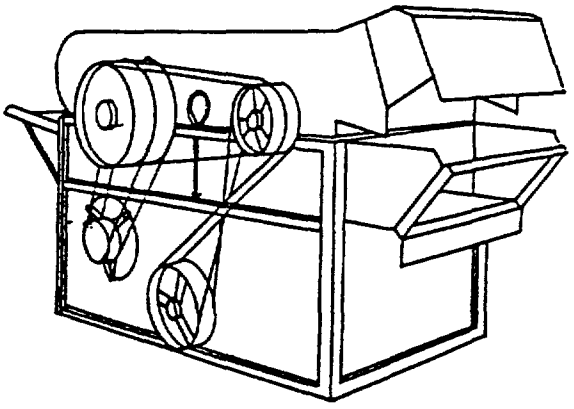

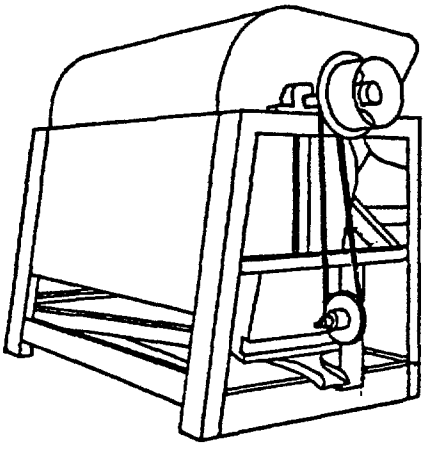

MADHO WHEAT THRESHERS

Madho produce a range of wheat threshers which are also suitable for threshing other crops such as barley, jowar, bajra, pulses etc. It performs the threshing, screening and winnowing processes in one operation.

Technical specifications:

Model	Electric motor hp	Oil engine hp	Output kg/h
1	5	5-8	200
2	7.5	10	300
3	10	12-15	500
4	15	20	600-700
5	20	25	800

MADHO MECHANICAL WORKS
B-49 Industrial Focal Point
G.T. Road
Moga 142 001 (Punjab)
INDIA

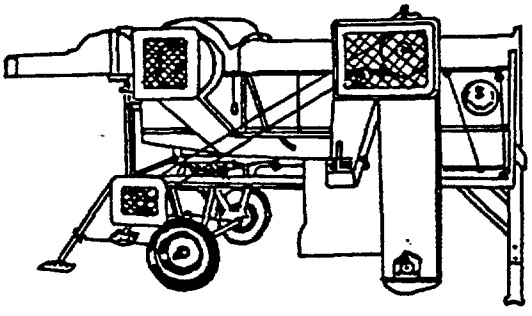

STANDARD THRESHERS

STANDARD UNIVERSAL THRESHER RD IVa This machine (illustrated above) is suitable for threshing all cereals. It consists of a peg-threshing drum and adjustable concaves. It has a power requirement of 5-8hp, and an overall weight of 470kg.

STANDARD RICE THRESHER IIa Adaptable for hand, foot or motor drive, this thresher is equipped with a toothed drum and toothed concave. It does not have a cleaner and straw shaker attachments. Power requirement is 3-5 hp, and overall weight is 330kg. (illustrated below).

STANDARD GmbH
Postfach 1160
3118 Bad Bevensen
W. GERMANY

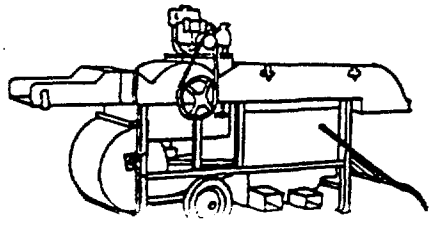

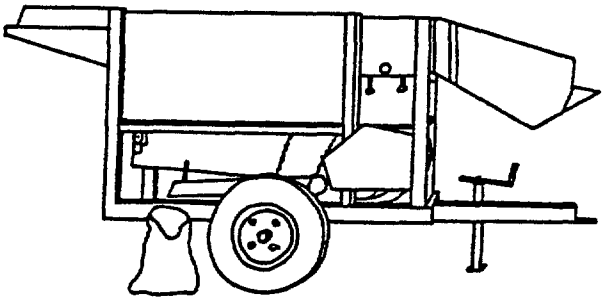

MOBILE THRESHERS

AMAR MULTICROP THRESHER This is a raspbar thresher suitable for all cereals, soybeans etc. It requires 10hp, and has a capacity of 6-10 quintals/h for wheat, and 25-35 quintals/h for maize. The overall weight is 640kg.

AMAR AGRICULTURAL IMPLEMENTS WORKS
Amar Street, Gill Road
Janta Nagar, Ludhiana-141003
INDIA

VICON THRESHER ST-45 The ST-45 is fitted with a rasp bar drum, and can be equipped with wheels for trailing, or a yoke for bullock draught. It has a power requirement of 10hp, and a capacity ranging from 1000kg/h for wheat, to 2000kg/h for maize. The overall weight is 790kg.

VICON LTD.
Mahadevapura Post
Bangalore 560 048, Karnataka
INDIA

MINORETTE AND MINOR THRESHERS The minorette (illustrated) has a power requirement of 7.5hp. It can be fitted with either a peg drum, consisting of 12 bars each with 5 pegs, or a rasp bar drum, consisting of 6 beaters. The overall weight is 900kg. Capacity, based on average dry wheat, can reach 1000kg/h. The Minor is a larger thresher weighing 1400kg. Like the minorette it can be fitted with a rasp bar or a peg drum. Capacity can reach 2000kg/h. The minor thresher features a grain elevator consisting of a bucket and roller chain with single bagging-off chute. It is constructed from steel and mounted on a robust steel chassis.

ALVAN BLANCH DEV. CO. LTD.
Chelworth
Malmesbury, Wilts. SN16 9SG

17

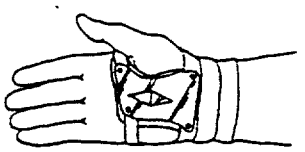

HUSKING HOOKS AND PINS

These husking hooks greatly speed the laborious task of removing the husk from corn cobs when this is carried out as a manual operation. When harvesting, too, is manual the husk is often left on the stem.

MAST HARNESS SHOP
RL 1, Box 228
Hazletown, Iowa 50641
U.S.A.

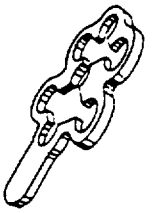

DUPLEX HAND-HELD MAIZE SHELLER

A simple, highly efficient hand-held sheller with the capacity to handle cobs of varying size. It is manufactured in cast iron for long life. Two sizes are available.

R. HUNT & CO. LTD.
Atlas Works, Earls Colne
Colchester, Essex CO6 2EP
U.K.

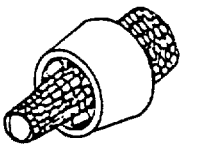

HAND CORN SHELLER AND SEED GRADER

This sheller ensures quick and easy shelling of corn. It is especially adapted for use in the selection of seed corn, as it does not break off the germ ends of the kernels.

DECKER MANUFACTURING COMPANY
312 Blondeau, Keokuk
Iowa 52632
U.S.A.

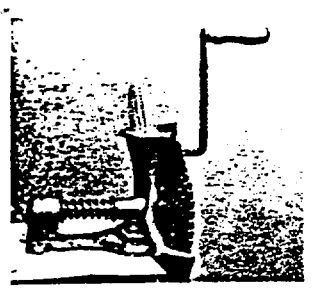

HAND-OPERATED MAIZE SHELLERS

The following firms manufacture a hand-operated maize sheller designed for bench mounting. Capacity may reach 500 cobs/h.

HAND-OPERATED SHELLER (illustrated)

ETS. A. GAUBERT
22 rue Gambetta
BP 24, 16700 Ruffec
FRANCE

MAIZE SHELLER NO. 994 Electrically moulded cast iron. Weight 4.5kg.

LANG FERRY & CIE
Brousseval (Mte-Marne)
52130 Wassy
FRANCE

SHELLER Cast iron body, steel crank with movable toothed disc on steel shaft with compression spring. Weight 6kg.

RENSON ET CIE
BP 23, 59550 Landrecies
FRANCE

MAIZE DECORTICATOR E 220 Spring assembly allows all sizes of corn cob to pass through. Weight 6kg.

S.E.C.A.
38260 La Cote St. André
FRANCE

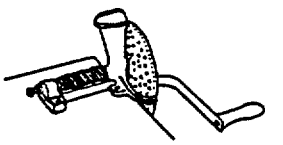

AB/MSHB MAIZE SHELLER

This sheller is illustrated above. Cast iron stripper plate is spring loaded to accept cobs of any size.

ALVAN BLANCH DEV. CO. LTD.
Chetworth
Malmesbury, Wilts. SN16 9SG
U.K.

CHITETZE HAND-OPERATED MAIZE SHELLER

This sheller comprises two steel cylinders. The inner cylinder, fitted with two rows of internal teeth, is revolved within the outer by a hand crank. The sheller can be attached to any convenient wooden surface by nails or screws. The shellers are made in three sizes to suit the principle maize varieties grown in Malawi. The sizes relate to the circle formed by the ends of the teeth, and are 40mm, 33mm and 27mm respectively. The sheller has an output of 30kg/h of shelled maize from dehusked cobs.

PETROLEUM SERVICES (MALAWI) LTD.
Barnes Rd., Ginnery Corner
P.O. Box 1900, Blantyre
MALAWI

LILONGWE SHEET METAL LTD.
P.O. Box 47
Kanengo, Lilongwe 4
MALAWI

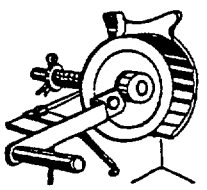

NDUME HAND-OPERATED MAIZE SHELLER

Constructed of three basic parts, of which two are strong and durable castings, the Ndume maize sheller is simple and robust. It can be mounted on a bench, table or post, and has a capacity of approximately 30kg/h of maize.

NDUME PRODUCTS LTD.
P.O. Box 62, Gilgil
KENYA

HAND-OPERATED MAIZE SHELLERS

ATLAS SHELLER Manufactured in the traditional design, this maize sheller (illustrated left) is constructed from cast iron for durability and long life. The Atlas maize sheller has a capacity of up to 120kg/h.

R. HUNT & CO. LTD.
Atlas Works, Earls Colne
Colchester, Essex CO6 2EP
U.K.

SMALL MAIZE SHELLER The small maize sheller (illustrated right) is designed so as not to break the eye of the corn seed, which is essential for germination. It has a capacity of 30-50kg/h of grain, and an overall weight of 20kg.

MOHAN SINGH HARBHAJAN SINGH
G.T. Road
Goraya 144 409 (Pb.) Distt.
Jullundur (N.R.)
INDIA

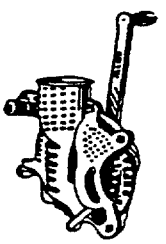

HAND MAIZE SHELLERS

The following manufacturers all produce a spring maize sheller, with an average weight of 7kg.

They can be mounted on a stand, bench, box etc. and have an output of 30-100kg/h.

RAJAN UNIVERSAL EXPORTS (Mfrs.) PVT. LTD.
Post Bag 250, Madras 600 001
INDIA

CECOCO
P.O. Box 8
Ibaraki City, Osaka 567
JAPAN

DANDEKAR BROTHERS
Sangli-Shivaji Nagar, 416 416
Maharashtra
INDIA

IDEAL CASEMENTS (E.A.) LTD.
Box 45319, Nairobi
KENYA

COSSUL & CO. PVT. LTD.
123/367 Industrial Area
Fazalgunj, Kanpur, U.P.
INDIA

ALLIED TRADING COMPANY (INDIA)
Railway Road
Ambala City, Haryana
INDIA

CORN SHELLER

C.S. Bell produce this small corn sheller designed for dry ear maize and walnuts. It includes a cob ejector and tipping attachment. The spring adjusts to fit all size ears.

C.S. BELL CO.
170 W. Davis Street
Box 291, Tiffin, OH 44883
U.S.A.

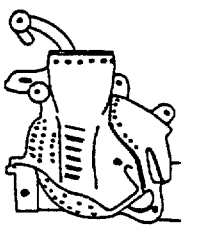

MAIZE AND WALNUT SHELLER

A cast iron sheller weighing 10kg suitable for all types of large nuts, maize and corn.

CHAFF-CUTTERS (NZ) LTD.
P.O. Box 11, Ngaiea
NEW ZEALAND

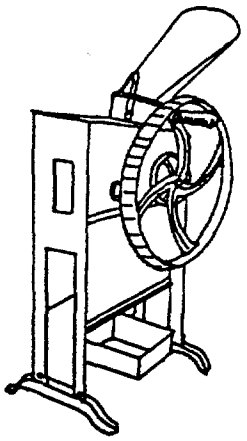

MAIZE SHELLERS

AB/MAH/3 MAIZE SHELLER This simple, hand-fed sheller (illustrated) has one hole to receive the cobs. It can be adapted for hand, pedal or power drive, the latter using a 0.5hp electric motor or petrol engine. Capacity, at 170rpm, is approx. 300kg/h. Overall weight is 86kg.

ALVAN BLANCH DEV. CO. LTD.
Chelworth
Malmesbury, Wilts. SN16 9SG
U.K.

MOTORIZED MAIZE SHELLER Powered by 0.5hp motor, this sheller has a capacity of 300kg/h, although it can be driven by hand. The overall weight is 86kg.

RENSON ET CIE
BP 23, 59550 Landrecies
FRANCE

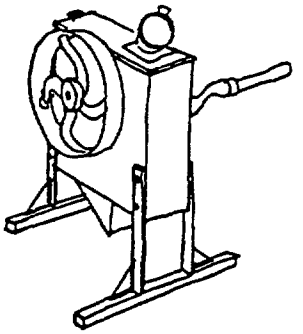

MAIZE SHELLERS

MAIZE SHELLER Hand- or motor-driven, with a capacity of 150-300kg/h (illustrated left).

SISMAR
B.P. 3214
20 rue Dr. Theze, Dakar
SENEGAL

HAND-OPERATED CORN SHELLER This machine can be operated by hand or by an electric motor.

UNION FORGINGS
Sherpur, Ludhiana, Punjab
INDIA

MAIZE HULLER NO. 3 M The 3 M (illustrated right) is hand-operated only, unlike the two models featured above. It can be regulated for different sizes of cob by means of a wing nut. Capacity is approx. 300-400kg/h.

ETS. CHAMPENOIS S.A.
Chamouilley, 52170 Chevillon
FRANCE

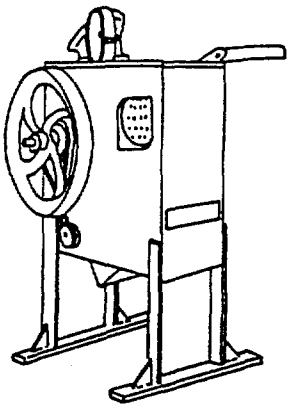

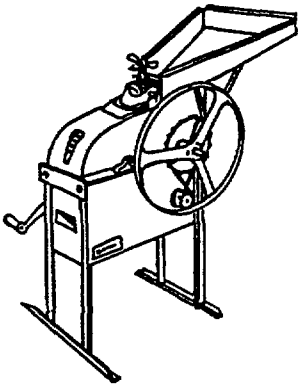

MAIZE SHELLERS

DM-2 CORN GRINDER This maize sheller (illustrated left) can be operated by hand or by a 0.25hp motor. It features a pressure lever regulated by a spring in order to adjust to various cob sizes, and a cleaning fan. Overall weight is 76kg.

PENAGOS HERMANOS & CIA. LTDA
Calle 28, No 20-80
Apartado Correos 689
Bucaramanga
COLOMBIA

HAND AND POWER MAIZE SHELLER A spring-type sheller (illustrated right) of all-steel construction with a cleaning fan. Power requirement is 1hp. Capacity ranges from 100-120kg/h (hand-operated) up to 200-300kg/h (power-operated). Overall weight is 70kg.

COSSUL & CO. PVT. LTD.
123/367 Industrial Area
Fazalganj, Kanpur, U.P.
INDIA

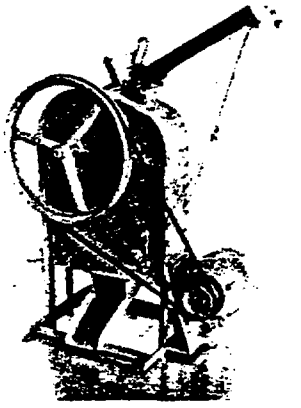

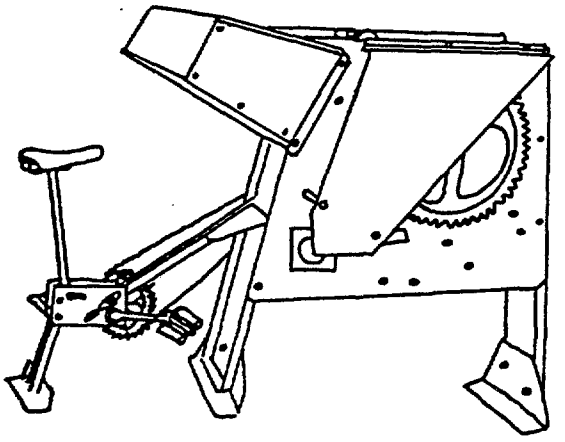

CYCLE MAIZE SHELLERS

Individual cobs are fed by hand into two holes and then drawn against revolving vertically mounted plate wheels.

AB/MSH/6 MAIZE SHELLER This model (illustrated above) has no sieving action, but a winnowing fan helps provide a clean sample. It can be powered by a petrol engine or ½hp electric motor (output 800kg/h).

ALVAN BLANCH DEV. CO. LTD.
Chelworth
Malmesbury, Wilts. SN 16 9SG
U.K.

COBMASTER MAIZE SHELLER This machine (illustrated right) can be hand- or pedal-operated or power driven (output up to 750kg/h).

R. HUNT & CO. LTD.
Atlas Works, Earls Colne

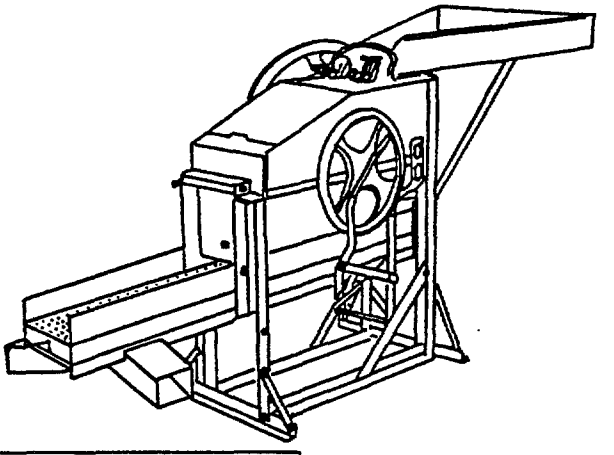

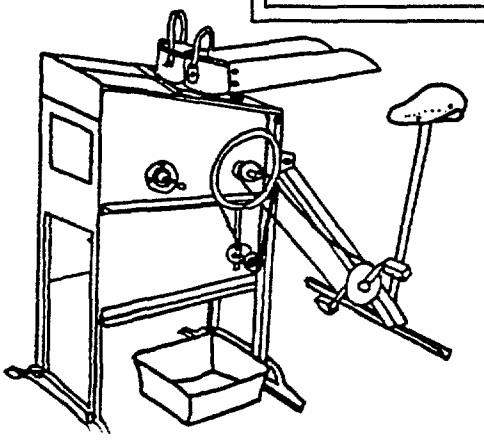

2-HOLE SHELLERS

The illustration above shows the 2-hole sheller which will give two grades of maize. It has the following features:

- hand powered
- output of up to 10 bags per hour
- metal construction for durability
- grades into two grades
- adjustable for cob size
- lubricated roller bearings
- power pulley available

BAIN MANUFACTURING COMPANY (PVT.) LTD.
Box 1180, Harare
ZIMBABWE

JAMES NORTH & SONS LTD.
P.O. Box No. 3, Hyde
Cheshire SK14 1RL
U.K.

14

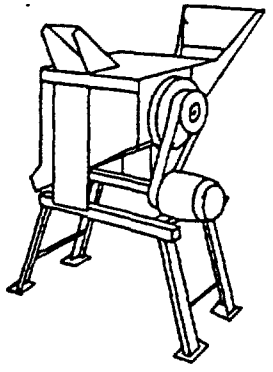

CORN HUSKER/SHELLER

CORN HUSKER SHELLER This machine is fitted with an axial flow motor capable of husking and shelling up to 600kg of maize per hour. It has a pneumatic box-winnowing system and is driven by a 2hp electric motor or engine. (Illustrated).

LAREDO MODELS S.A.
Industria E. Comercio
Rua 1 de Agosto
17.100 Bauru (SP)
BRAZIL

CORN SHELLER Two models are produced for husking, cleaning and sacking of any kind of corn. They can be powered by tractor, electric motor or petrol or diesel engine. Model SDMN -15/35 is the smaller machine with a power requirement of 5 to 8hp, and output of 900 to 2100kg/h.

NOGUEIRA IRMAOS SA
Rua XV de Novembro 781
P.O. Box 7
13970 — 1 Itapira, Sao Paulo
BRAZIL

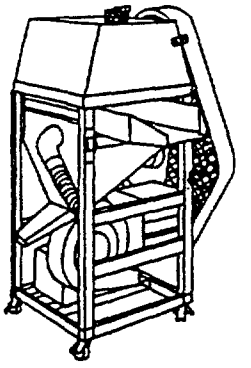

SINGLE-EAR SHELLER

The single-ear corn sheller was developed primarily for use on test plots. It enables the operator to grade, count and size corn more efficiently. It is equipped with two 110 volt electric motors. One drives the shelling and separating operation and the other the blower for cleaning. The shaker pan has oval screen openings to allow all sizes of seed to be cleaned. The sheller is well constructed of tubular steel and 16 gauge sheet metal. It is mounted on rolling castors that can be locked when in position. It has belt and chain guards for safety. The height of the sheller is 125cm which makes observation of operating procedure possible at all times.

SWANSON MACHINE CO.
20-26 E. Columbia Avenue
Champaign, Illinois 61820
U.S.A.

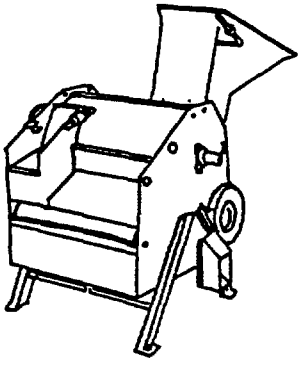

MAIZE SHELLER M30

The M30 maize sheller standard model (illustrated) is supplied with a 240mm diameter pulley and carrier arms. The power requirement is 3 to 5hp and output is 2000 to 3000kg/h. The following accessories can be fitted:

- bagging elevator, outlet at 0.9m from ground
- bulk elevator, outlet at 1.9m from ground
- 3 point linkage with Glaenzer joint drive and protector to enable the sheller to be driven by tractor
- electric motor with a 120mm diameter flat pulley and belt
- lengthening port 1m in length to extend the bulk elevator or bagging elevator.

STE COMIA-FAO SA
27 bd. de Châteaubriant, BP 91
35500 Vitré
FRANCE

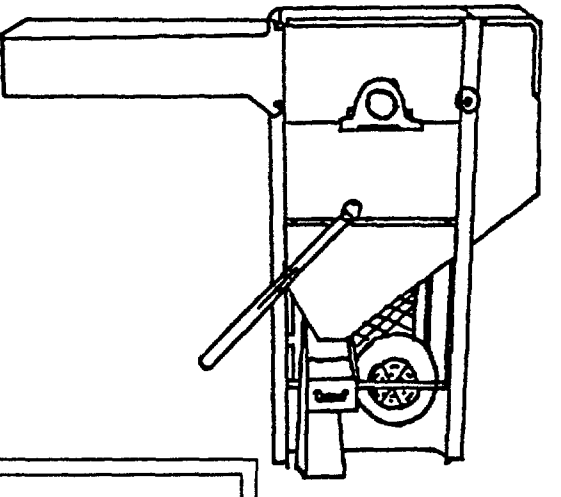

CORN SHELLERS

ALMACO EAR CORN SHELLER A self-cleaning unit with a rasp bar type shelling cylinder suitable for the grain breeder and similar research operations and is capable of single and multiple ear shelling. It requires a 2hp electric or 3hp petrol engine.

ALMACO
Box 296, 99 M. Avenue
Nevada, Iona 50201
U.S.A.

EDALTA 200 This corn sheller or steel construction can be powered by a 5 to 7hp petrol or diesel engine or a 3 or 4hp electric motor and produces up to 2100kg/h.

CIA PENHA MAQ. AGRÍCOLAS
Av. Brazil 1724, C.P. 477
Ribeirao preto
BRAZIL

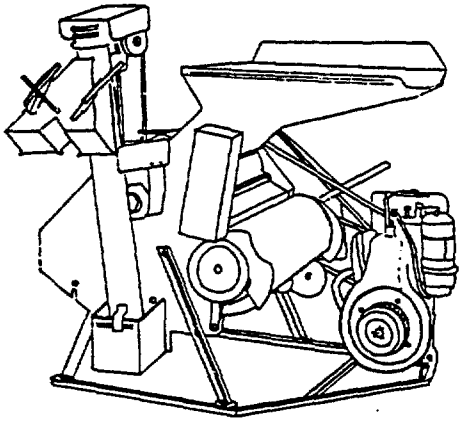

TROPICAL SHELLER

The Bamba tropical sheller is designed for African millet, sorghum and maize and can be operated by one person. It is powered by either a 5.5hp electric motor or 9hp petrol or diesel engine or with power take-off for any tractor. The output per hour is 1500kg of maize or 300-500kg of millet.

The grain can be collected in bags laid on the ground or the long auger can be attached for discharging directly into a trailer.

BOURGOIN S.A.
61 Av. Georges-Clemanceau
85110 Chantonnay, BP 17
FRANCE

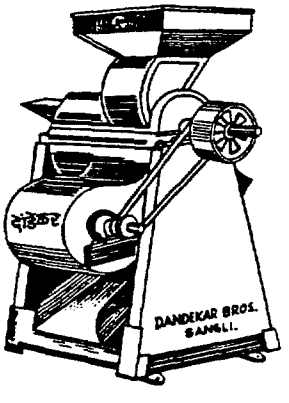

MAIZE SHELLER

This machine (illustrated left) can either be hand-operated or power-operated, requiring a 5hp motor or engine. The shelling capacity is 1500kg/h.

DANDEKAR BROTHERS
(Engineers & Founders)
Sangli-Shivaji Nagar, 416 416
Maharashtra
INDIA

POWER MAIZE SHELLER

Dry cobs are fed into the shelling drum through a chute. Rotating iron beaters shell the grain (illustrated right). The power requirement is 3 to 5hp and output in 2000 to 2500kg/h

INTERNATIONAL MFG. CO (Regd.)
Hospital Road, Jagraon
Ludhiana, Punjab
INDIA

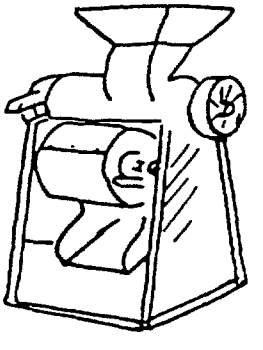

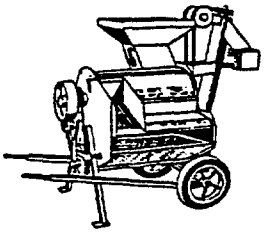

BAMBA CORN SHELLER

For millet, sorghum and maize, this machine requires an 8.5hp engine and has an hourly output of 300kg of millet or 1500kg of maize.

MARPEX
1 rue Thurot, 44000 Nantes
FRANCE

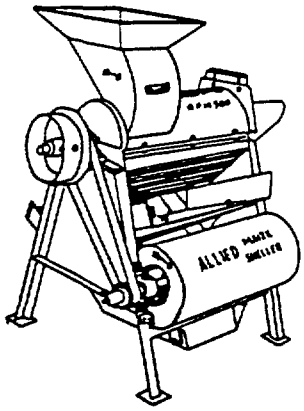

MAIZE SHELLERS

POWER-DRIVEN MAIZE SHELLER Operated with a 5hp electric motor, or with an oil engine (illustrated left). A winnowing fan is attached which separates the kernels from the cobs. The cobs are then expelled and the maize kernels are cleaned by the exhaust fan.

ALLIED TRADING COMPANY (INDIA)
Railway Road
Ambala City, Haryana
INDIA

MOHINDER MAIZE SHELLERS Mohinder produce two power-driven maize shellers (illustrated right). The first has a power requirement of 3hp and an output of 10-15 quintals/h. The second, larger model has a power requirement of 5hp and a capacity of 18-20 quintals/h.

MOHINDER & CO. ALLIED INDUSTRIES
Kurali, Distt. Ropar, Punjab
INDIA

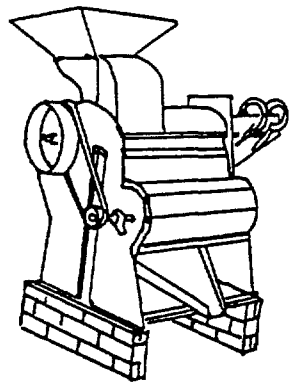

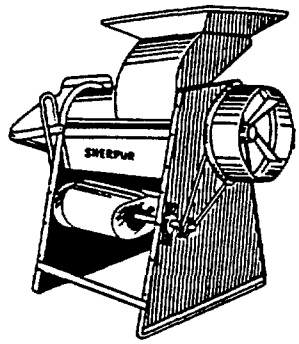

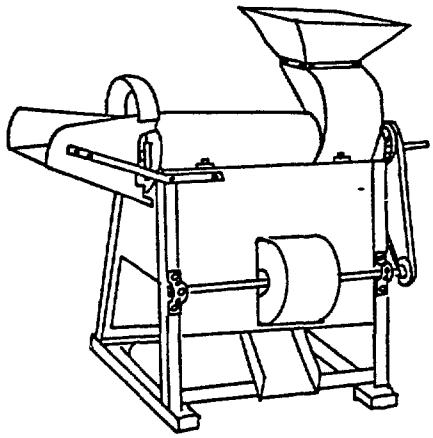

MAIZE SHELLERS

SPIKE-TOOTH MAIZE SHELLER This sheller features a blower for increased cleaning efficiency, and a lever to control the flow of grain. Two models are produced, the MS-10 and the MS-5, with power requirements of 10 and 15hp, and outputs of 15-25 and 10-15 quintals/h respectively. (Illustrated).

STANDARD AGRICULTURAL ENGINEERING CO.
824 & 825 Industrial Area B
Ludhiana A-141 003, Punjab
INDIA

AMUDA MAIZE SHELLER It can be powered by an electric motor or an oil engine. Again, two models are available, with power requirements of 3 and 5hp, and capacities of 1000-1200 and 1450-1650kg/h respectively.

RAJAN UNIVERSAL EXPORTS (MFRS.) PVT. LTD
Post Bag 250, Madras 600 001
INDIA

SHERPUR MAIZE SHELLERS

Both Union Forgings and Eicher produce the power-operated maize sheller illustrated above. It is manufactured from steel and can be operated with either an electric motor or a diesel engine. The power requirement is 5hp. Output ranges from 15-25 quintals/h of grain according to the rate of feeding. The overall weight of the Sherpur maize sheller is 200kg.

UNION FORGINGS
Focal Point
Sherpur, Ludhiana, Punjab
INDIA

EICHER GOODEARTH LTD.
Deepak 3rd Floor
13 Nehru Pl, New Delhi 110 019
INDIA

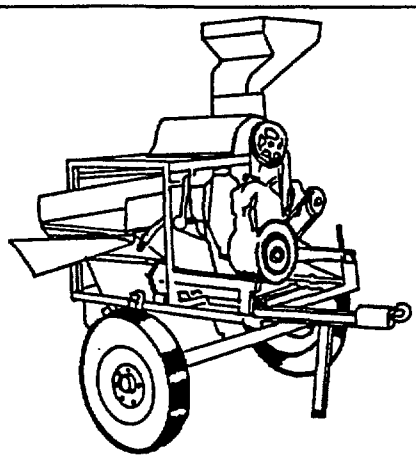

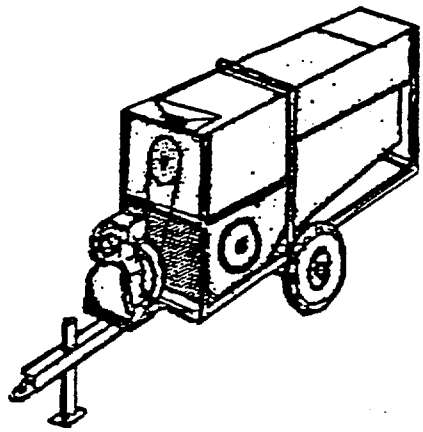

LAKAS KULIGLIG CORN SHELLER

The Lakas corn sheller has the following features:

- portable design, provided with tyres for simple mobility
- easy towing, towing-bar affixed.
- conical-shape shelling drum ensures high percentage (99-100 per cent) separation recovery and no broken grain.
- blower designed with air control for regulated blowing to separate clean shelled corn from fine waste.
- shaker separates shelled corn from cobs.
- labour requirement of 3, to feed shell and bag the grain.
- all steel construction.

P.L FARM PRODUCTS
Km 16, Malanday
Valenzuela, Metro Manila

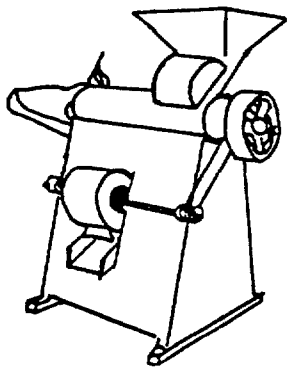

AMAR MAIZE SHELLERS TYPE A AND TYPE B

This cylinder automatically separates the grain from the husks which are then expelled from the machine on three sides.

Technical specifications:

	Type A	*Type B*
power required (hp)	8	5
output of clean grain (quintals/h)	20-50	15-40
RPM	700	700
germination	98%	98%
height (m)	0.9	0.8

AMAR AGRICULTURAL IMPLEMENTS WORKS
Amar Street, Gill Road
Janta Nagar, Ludhiana-141003
INDIA

AB/MS/40 AND AB/MS/30 MAIZE SHELLERS

The AB/MS/40 sheller features a single shelling cylinder and a feed elevator. It has a power requirement of 10hp for electric motor or diesel/petrol engine drive. The capacity of the AB/MS/40 can reach 4 tonnes/h of shelled maize.

The AB/MS/30 (illustrated above) is a simplified model of the AB/MS/40 described above. It features the same single shelling drum unit, but has a feed chute instead of a cob elevator. The height of this feed chute is kept to a minimum by dispensing with a primary shaker shoe leaving the two sieve shoe to cope adequately with the reduced throughput. The AB/MS/30 is available as a static or mobile unit with a choice of drives by electric motor (power requirement 10hp) or diesel or petrol engine. Capacity is up to 3 tonnes/h of shelled maize.

ALVAN BLANCH DEV. CO. LTD.
Chelworth
Malmesbury, Wilts SN16 9SG

76

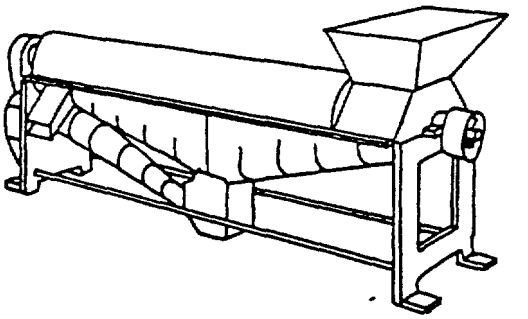

JYOTI GROUNDNUT THRESHER

The Jyoti groundnut thresher is an axial flow thresher, i.e. the plants move in a direction parallel to the beater axis. The pods are separated from the remainder of the plant in the threshing chamber so that the latter is expelled at the other end of the thresher. The pods, leaves and other impurities which remain then fall onto the sieve, where the leaves and light matter are removed by air from the blower. The clean pods then fall through the sieve and are discharged through the pod outlet. The thresher requires 10hp and is operated by 3-4 people. It can be used to thresh moist or dry groundnuts, and can also be adapted for other crops such as paddy, wheat and millet. Capacity ranges from 300-800kg/h of pods depending on the moisture content.

JYOTI LTD.
Bombay Shopping Centre
R.C. Dutt Road
Vadodara 390 005
INDIA

CECOCO PEANUT THRESHERS

This machine is designed to remove peanut pods from the haulm, chopping the remaining material into pieces of 10-12cm length. The power required is 1-3 or 2-4hp, depending on the model, and the capacity ranges from 250-370kg/h.

CECOCO
P.O. Box 8
Ibaraki City, Osaka 567
JAPAN

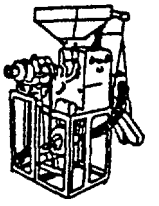

BEAN DEHUSKERS

LCS-300 BEAN SHELLER

LIM CHIENG SENG FACTORY
92-94 Sawanvithee Road
Nakorn Sawan
THAILAND

CECOCO BEAN DEHUSKER (illustrated)

CECOCO
P.O. Box 8
Ibaraki City, Osaka 567
JAPAN

MOON MAIZE SHELLER

This maize sheller is designed for medium capacity. It comprises a cylindrical, peg-type drum. This design enables the drum configuration to be changed to suit differing crop conditions. The Moon maize sheller incorporates a primary cleaning fan. It has a power requirement of 4-6hp and can shell 2500kg of maize per hour.

R. HUNT & CO. LTD.
Atlas Works, Earls Colne
Colchester, Essex CO6 2EP
U.K.

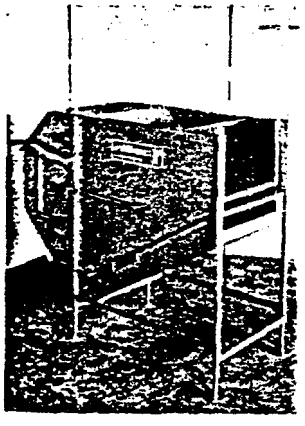

WINNOWERS

HAND WINNOWER (illustrated below) A hand-operated winnower for cleaning jowar and other crops. Capacity is 100-150 bags/day. All-steel body fitted with bearing and pedestal.

MAHARASHTRA AGRO IND. DEV. CORPORATION LTD.
Rajan House, 3rd Floor
Near Century Bazar, Prabhadevi
Bombay 400 025
INDIA

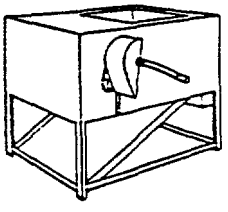

RÖBER HAND WINNOWER (illustrated left) This is a hand-driven winnower featuring 3 sieves, and a built-in ventilator. It has a capacity of 1.5 tonnes/h.

RÖBER GmbH
Friedrich-Wilhelm-Straße 79
4950 Minden (Westf 1), Postfach 1227
W. GERMANY

MINI WINNOWING MACHINE MEW-6 A hand-operated winnower constructed from sheet steel and angle iron.

MODERN ENGINEERING COMPANY
1A Anna Street, Velandi Palayam
Coimbator 641 025, Tamil Nadu
INDIA

WINNOWER 'JOLIE BRISE' Featuring 6 screens this winnower is designed for cleaning wheat, barley, rape seed, oats etc. It has a capacity of 1.5 tonnes/h and can be equipped either for hand or motor drive. The power requirement is 0.5hp. Overall weight is 130kg. Optional equipment available includes an elevator with sacking attachment, and extra upper screen, and an extra lower screen.

ASE EUROPE N.V.
Century Centre
de Keyserlei, 58 Box 1
B-2018 Antwerp
BELGIUM

CECOCO HAND WINNOWERS Cecoco produce two hand-operated winnowers. The first, the A1-model has a capacity of approximately 650kg/h, and an overall weight of 30kg.

The 'Hand grain winnower' is a smaller model weighing 17kg. Capacity is 650kg/h. A single-phase motor drive is available.

The hand grain winnower features three outlets (a) for whole grain or kernels, (b) for broken pieces, and immature grain and (c) for chaff, hulls and dust.

CECOCO
P.O. Box 8
Ibaraki City, Osaka 567
JAPAN

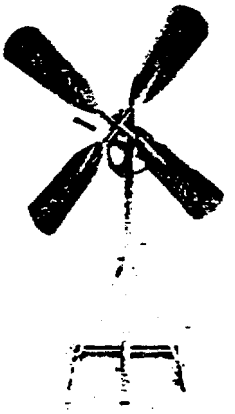

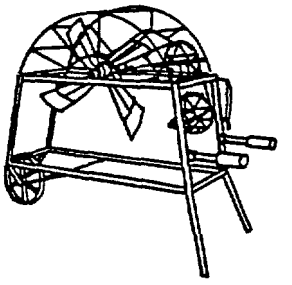

WINNOWING FANS

HAND WINNOWER This simple hand winnowing fan (illustrated above left) has a capacity of 500-800kg/h. Blade diameter is 120cm and overall weight is 25kg.

COSSUL & CO. PVT. LTD,
123/367 Industrial Area
Fazalgunj, Kanpur, U.P.
INDIA

WHEELBARROW-TYPE WINNOWING FAN Fixed to a stand with a single iron wheel at the front and two handles at the rear for easy mobility, this hand operated fan (illustrated above right) is driven by a series of bicycle chains and cogs. The stand is constructed from angle iron, and the blades have a diameter of 37cm. Sathiyawadi also produce a winnowing fan to be fitted to a hand tractor.

SATHIYAWADI STORES AND MOTOR TRANSPORTERS LTD.
P.O. Box 42, Kuronegala
SRI LANKA

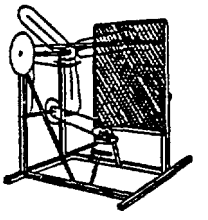

CYCLE WINNOWER

This winnowing fan is fitted with a bicycle seat and pedal drive mechanism. The frame is all steel, and the blades have a span of 120cm. Capacity ranges from 1500-2000kg/h.

COSSUL & CO. PVT. LTD.
123/367 Industrial Area
Fazalgunj, Kanpur, U.P.
INDIA

ANNEX B: ANEPP AMENDMENT - VENTURE CAPITAL

In the last ANEP Project Paper amendment, venture capital was incorporated as a project activity which could contribute to ANEPP's goal and purpose. Since then it has been recognized that venture capital is one of the most effective ways to finance the NTAE sector. Consequently, this activity will continue to be part of ANEPP. Continuing to expand the availability of venture capital under the ANEPP project will build upon USAID's experience in promoting venture capital in Uganda. Incorporation of venture capital as an explicit component of the project will enable USAID to strengthen the financial sector's ability to finance new and expanding businesses, particularly in the non-traditional export sector where Uganda has a comparative advantage.

USAID first established a venture capital facility through a $2.0 million grant to Development Finance Company of Uganda (DFCU) in February, 1994 under the Rehabilitation of Productive Enterprises (RPE) project. This grant provided $1.625 million for equity investments and the balance for start-up and operational costs and evaluation. The grant was later amended in May 1994 to provide an additional $550,000 for equity resources. Subsequently, another $1.8 million was granted to DFCU under ANEPP, bringing the total to $4.35 million. The balance available for draw-down under the agreement as of December 31, 1994, amounted to $1,425,000 for venture capital and $375,000 for operational support.

This grant will provide an additional $2.6 million, or up to $600,000 for operational costs and $2 million for equity, for an additional two years. This will bring the total contributions to date to $6.95 million.

1. Relationship to Project Goal and Purpose

The goal of the ANEPP Project is to increase rural production and employment. The project purpose is to increase the range and value of non-traditional exports by resolving public and private sector constraints to export promotion. Inclusion of a venture capital facility is necessary to the achievement of both. First, by creating access to equity financing, more exporters will be able to initiate and sustain export-oriented enterprises. Logically, such an expansion in export oriented businesses will contribute to an increase in the range and value of NTEs. All investments are expected to generate employment and growth in the economy, including in rural areas, thus venture capital can also be expected to contribute directly to the achievement of the project goal. All investments will be tracked to determine people-level impact.

In design and subsequent implementation of the ANEPP project it has been recognized that a variety of interventions are necessary

in order to stimulate the growth of non-traditional exports. To date, two streams of activities have been supported by ANEPP. One stream consists of firm level assistance -- technical assistance, training, and information services provided directly to non-traditional exporters. Since September, 1994, firm level assistance has been provided by USAID'S IDEA Project. The other stream consists of interventions to establish the institutional building blocks necessary to support NTEs and to improve the enabling environment for non-traditional export growth. Examples of the latter have included sector analysis to determine products and markets of comparative advantage and constraints to sector expansion and economy-wide activities such as generic investment promotion and building a national cold storage facility.

Exporters and project implementors have identified access to financing as an especially critical constraint to the expansion of non-traditional exports. The availability of venture capital, in particular, is considered a necessary precondition for new starts or project expansions in the relatively high risk area of non-traditional exports. Thus, by reducing one of the principal constraints identified to date, support for venture capital expansion will contribute directly, though not exclusively, to the achievement of the ANEPP project goal and purpose. The venture capital facility itself, as the only equity finance mechanism in Uganda, also will provide a demonstration model for replication by other donors, financial institutions and indigenous investors.

2. Activity Description

USAID will make a grant of $2.6 million to the Development Finance Company of Uganda (DFCU) to provide resources for a venture capital fund for equity investments and to share with DFCU the operational costs of managing the facility. The equity resources will be invested and managed on a commercial basis. DFCU will require separate appraisal and supervision of equity and debt investments. Each decision to invest either equity or debt will have a consolidated financial impact on the DFCU. If there are profits and capital gains from investments, the shareholders of DFCU stand to gain. Likewise if there are losses on the equity investments, the DFCU shareholders will share in the loss. There will be close cooperation and referral from the Mission's IDEA project, Mission staff and the other components of the ANEPP project to the DFCU for consideration of specific investments opportunities.

Equity investments from the venture capital facility will capitalize on Uganda's areas of comparative advantage which lie in export oriented production with primary reliance on locally-sourced inputs such as agricultural commodities and labor. The Development Finance Company of Uganda has developed an investment policy to govern their resource allocation and ensure stability and continuity of their portfolio. In order to achieve the diversification necessary for balance and growth, the investment

policy gives primary emphasis to agriculture but stipulates that no more than thirty percent of the fund can be concentrated in any one sector. To limit investments to any one sector would distort the overall investment portfolio and create a situation where investment decisions are determined by factors other than the viability of the proposed project. This would make the fund vulnerable to sector-specific disruptions, such as drought . The DFCU investment policy, which has been reviewed and approved in writing by USAID/Uganda and the Regional Legal Advisor of REDSO/ESA, will govern the investment decisions of the DFCU in accessing USAID resources.

The DFCU will have the option but not the requirement to obtain USAID concurrence in individual investments prior to submission to their Board. Once the DFCU Board has approved an investment the DFCU can either obtain an advance from USAID which will be disbursed in the equity investment, or disburse funds to the investment and seek reimbursement from USAID.

The DFCU will provide investment monitoring and impact reporting to USAID on a quarterly basis. During the grant period the DFCU will continue staff development, monitoring and information system expansion, and will pursue options for continuation and expansion of venture capital activities through wider participation in this fund or through creation of a secondary equity fund.

3. Choice of Development Finance Company of Uganda

The DFCU has been identified based upon its proven ability to manage a venture capital finance program and to satisfy conditions and regulations required of USAID grantees. USAID identified DFCU as a potential manager of a USAID-funded venture capital fund in 1993 under the RPE project. A detailed evaluation of the development Finance Company of Uganda was conducted as of September 20, 1993. This review encompassed as evaluation of the institution's key functional areas for the purpose of determining its suitability and capacity to manage a new venture capital company. The areas evaluated included management, financial status, operations investment management, audit, future prospects and other significant activities. Other specific areas of interest that were evaluated included loan loss reserve policy and trends, institutional liquidity, capital adequacy, earnings and assets.

Venture capital and lending operations were reviewed to determine the adequacy of the firm's operating policies, procedures and internal controls. No major exceptions were noted and the firm was determined to have the capacity both to effectively manage an equity investment program and to adhere to USAID regulations and guidelines for Grantees. Prior to extending an initial grant to the DFCU, the Controller's office conducted a financial and systems review of the DFCU and determined their suitability to

receive and manage US Government funding. The complete institutional analysis and the results of a subsequent evaluation carried out in February 1994 are available.

A grant totalling $4.35 million has already been made to the DFCU for use in venture capital investment. The grant is to cover the company's start-up and operational costs in establishing a venture capital unit up to an amount of $750,000, while the balance of $3,600,000 is to be utilized for equity investments. Six investments have been completed, utilizing $1.95 million of the equity fund and leveraging approximately $27 million. The investments are in the areas of cotton ginning for export, fish processing for export, leasing of machinery and equipment (primarily agricultural), an office building, housing finance, and insurance. In addition, two projects have received DFCU Board approval: a pyrethrum export business in Kabale and a rose farm in Entebbe. As expected, the initial investments made from a facility with a tight disbursement window, are largely urban-based and represent those projects and sponsors that were already fairly far along in development of feasibility studies, sourcing of materials. In this phase of venture capital, preference should be given to developing rural agricultural investments, particularly in the non-traditional export sector.

ANNEX C, ANEPP AMENDMENT: Update of Economic Analysis

The purpose of ANEPP is to increase the range and value of non-traditional exports by resolving public and private sector constraints to export promotion. The overall goal is to increase rural men and women's incomes. This amendment includes components which will significantly contribute to achieving the purpose and goal of the project. The revised project description includes: Agricultural Export Policy, Post Harvest Handling, as well as Venture Capital.

The question one has to ask is: are the potential benefits from this project worth the investment of approximately $6.0 million? In order to answer this question one has to estimate the potential benefits of the project component. Since the project will provide the necessary incentives to increase production and trade in NTEs, the beneficiaries would be the segments of society involved in such production and trade. In addition, consumers and end-users of imports that would directly result from an expansion of NTEs and the consequent increased foreign exchange earnings available to finance imports, would benefit.

A. POTENTIAL BENEFICIARIES

As indicated above, the beneficiaries of the project include producers of NTEs, marketing agents, exporters, as well as end-users of imported goods. The following is a brief discussion of how the identified groups could benefit.

Producers: The principal beneficiaries of the program will be numerous producers of nontraditional exports in the agricultural sector. The vast majority will be smallholders who are not expected to be concentrated in any particular geographic area. However, until the extensive national road network is fully rehabilitated it is expected that the participating producers will be those with access (financial and physical) to markets located near the major trunk roads so as to minimize transport costs within the marketing system.

Producers of nontraditional exports are going to face improved price incentives to expand their output or become engaged in the production of new export crops. This is expected because a program to enhance nontraditional exports will increase the size of the internal, outward oriented market for such farm output. To the extent that this becomes a reality farm gate prices are expected to increase. As Ugandan exporters identify new, profitable export markets such effective demand will be translated back through internal markets to the producers of such commodities. Price expectations and/or actual prices will tend to stimulate the production of commodities that offer the highest prices (net income) to farmers. Resources at the farm-level are likely to be reallocated to the production of crops which earn producers the highest net incomes. Investment of slack resources (land and labor) and in off-farm inputs are also likely to be a

direct result of improved production incentives.

The end result could be a significant expansion of output, income and employment within the export oriented rural sector. The benefits of increased farm-level output, income and employment are obvious, but the ability to, ex-ante, estimate the magnitude of such benefits is not only difficult due to the lack of data, but likely to be a fruitless exercise. The important point, however, will be an attempt to capture these anticipated benefits during the monitoring and evaluation of the program.

Marketing Agents: The new structure of incentives envisioned as a result of the project will also impact upon internal marketing systems. In fact, the marketing system will become an integral part of the program to expand nontraditional exports.

Undoubtedly the structure, conduct (competitiveness) and performance of agricultural markets will change as a result of the anticipated increase in farm-level production and the increased demand of exporters for exportable commodities. Marketing agents will be required to procure, grade, assemble, package and transport increasing volumes of marketable surpluses. In order to effectively cope with increasing volumes, both private investment and increased employment can be expected to take place within the marketing system. In fact, empirical evidence supports this contention as studies have shown that as farm-level production and external trade increase in LDC's, employment within the commodity marketing sector normally dramatically increases. Also the rural-urban income distributional aspects of this phenomenon have also been found to be positive.

The income benefits that take place within the marketing sector will impact on rural incomes not only through direct employment in the marketing sector but also via backward linkages to the farm sector through demand and price for marketable output thereby stimulating farm-level production, income and employment (and the demand for imports).

Exporters: Private exporters who will be involved in the export of NTEs will directly benefit. Their principle sources of income will arise from the trading margins on their exports and trading margins on the imports they finance from the foreign exchange earned from their exports. In terms of number of beneficiaries, the number of participating exporters are expected to be relatively few compared to the number of farmers (large numbers) and marketing agents (few numbers) that will benefit. However, while this will be the case the total number of beneficiaries will be in direct relationship to the effectiveness of exporters in seeking out and identify profitable export markets for nontraditional exports. Thus, while the number of participating exporters will be far less than the number of farmers and marketing agents benefiting from the program, exporters will be critical to the success of the program, in terms of magnitude of

the total benefits to be realized and the total number of beneficiaries who will in fact benefit from the expansion of nontraditional exports. Again, these benefits cannot realistically be quantified but they could be captured during the monitoring and evaluation of the program grant.

End-users of Imports: Through the project, private exporters will earn foreign exchange to finance imports. While it is not possible to specify the nature of specific imports likely to be financed, consumer goods, and intermediate goods for agriculture industry and the construction trade, plus agricultural inputs will be imported as a direct result of the project. Importers are not likely, at least in the short run, to import slow moving or unprofitable items. Rather they will import items in which there is a clear excess effective demand, so they can sell imports quickly to generate local currency to internally procure additional exportable.

Since the level of imports coming into Uganda are far below the requirements of the economy, the export/import business is expected to thrive. Consumers, industrialists, private entrepreneurs, marketing firms and/or agents not to mention farmers will directly or indirectly benefit from an increased level of imports into the economy. Imports will not only help satisfy consumer needs but also encourage or create the means to expand both rural and urban and industrial and agricultural production. An expected upswing in economic activity will be directly attributable to increased imports fed by an expansion in nontraditional exports.

B. QUANTIFICATION OF POTENTIAL BENEFITS

As mentioned earlier, the precise quantification of the aforementioned benefits is difficult at this stage. However, in the discussion which follows, an attempt is made to quantify (at least part of) the expected benefits of some of the major components of the project.

Export Policy: The ANEP project, through EPADU, has played an influential role in improving Uganda's economic environment. The Government of Uganda (GOU) is now seen as one of the most consistent reformers in Sub-Saharan Africa. As a result of these reforms, Uganda's annual GDP growth has averaged about 6% over the past few years , with the rate of inflation declining significantly. Over the same period, the value of non-traditional exports have increased from around $8-9 million in 1988 to over $70 million in 1993. This value provides a crude estimate of the gross income which may have accrued to producers, transporters and exporters from increases in non-traditional exports. Other estimates put the value of non-traditional exports in 1993 as high as $142 million (see December 1993 ANEPP evaluation).
Despite the notable improvement in the macroeconomic environment,

Despite the notable improvement in the macroeconomic environment, numerous second-tier policy constraints still remain. Some of these policy and regulatory constraints facing NTAE producers, processors, and exporters will be addressed by EPAU. Preliminary estimates indicate that at the end of the three-year project, the Policy component would result in increasing the value of NTEs to $138 million by 1998 (compared to $70 million in 1993). This assumes an estimated annual growth rate of 15%. In addition, 20 NTEs could be earning more than $2 million per year by 1998, compared to a total of 9 in 1993. In addition, stability in foreign exchange rates can improve the foreign exchange earnings from NTAEs. According to a recent study by EPADU, stabilizing the exchange rate at, for example, Ush 950/US$ rather than allowing the rate to drop to Ush 850/US$ could save $26 million in annual foreign exchange earnings which could have been foregone.

Venture Capital: The impact of successful equity investment on the Ugandan economy can be substantial. The impact can be far greater than the absolute amount of funds invested especially in a developing country like Uganda where investment capital is a constraint to many local investors. By creating access to equity financing, more exporters will be able to initiate and sustain export-oriented enterprises. This expansion in export oriented businesses are expected to generate employment and thus growth in the overall economy. In Uganda, it has been estimated that for every dollar invested through venture capital, a total of 4 dollars could be mobilized into the economy. This implies that for the $2 million ANEPP plans to put in venture capital equity, at least $8 million could be mobilized into the Ugandan economy. According to DFCU, the venture capital investments made so far have had far greater impact than expected - an estimated $27 million has been mobilized as a result of $2 million of equity investment.

Post Harvest Handling: The primary direct beneficiaries of PHH component will be rural men and women in the farm sector through increased incomes and returns to labor due to product conservation and quality improvement. The secondary beneficiaries will be entrepreneurs and their employees in the commercial sector. Reduced crop losses and increased quantity and quality of products reaching the market will translate into increased cash flow and profits which will strengthen businesses and increase employment opportunities. It has been estimated that, on the average, on-farm postharvest losses of maize and beans amount to 15% and 16%, respectively. This translates to an estimated annual loss of $18 million in monetary terms. Since the PHH component is expected to decrease the quantity of physical loss of maize and beans by 30 - 50%, we expect between $5 - $9 million savings in loss revenue per annum. Consequently, over the three year period of the project, the projected benefits could be anywhere from $15 million to $27 million.

ANNEPP Annex D

DRAFT REPORT

PROJECT PERFORMANCE MONITORING AND EVALUATION PLAN

AGRICULTURAL NON-TRADITIONAL EXPORT PROMOTION PROJECT (ANEPP)

USAID/Uganda

May 1995.

Prepared by: Joseph M. Mwangi, USAID/REDSO/ESA/APD

Rosern Rwampororo, USAID/Uganda/ANR

Submitted to: Gary Bayer, Chief, USAID/Uganda/ANR

James Dunn, Deputy Chief, USAID/Uganda, ANR

86

ACRONYMS

AMS	Activity Monitoring System
ANEPP	Agricultural Non-traditional Export Promotion Project
ANR	Agriculture and Natural Resources Division
API	Assessment of Program Impact
DFCU	Development Finance Company of Uganda
EMEMP	Environmental Monitoring, Evaluation and Mitigation Plan
EOPS	End of Project Status
EPADU	Export Policy Analysis and Development Unit
EPAU	Export Policy Analysis Unit
FAQ	Fair Average Quality
GOU	Government of Uganda
KARI	Kawanda Research Institute
MIS	Management Information Systems
NEWFIU	National Early Warning and Food Information Systems
NGO	Non-Governmental Organization
NTAE	Non-Traditional Agricultural Exports
PHH	Post Harvest Handling
PMS	Performance Monitoring System
PPD	Programs and Projects Development
PVO	Private Voluntary Organization
SO	Strategic Objective
TOR	Terms of Reference
UEPB	Uganda Export Promotion Board
USAID	United States Agency for International Development

I. INTRODUCTION

The goal of the USAID/Uganda development program is to "establish the basis for sustained improvements in the standard of living". A multi-dimensional approach encompassing economic growth, education, health natural resource management, and democratic governance is imperative for the achievement of this goal. Strategic Objective # 1 (SO 1) identifies "Increased Rural Men's and Women's income" as a crucial result that if achieved will contribute significantly to the achievement of the goal. One of the factors identified as an impediment for increased rural income was the over-reliance on traditional export crops particularly coffee. The Agricultural Non-traditional Export Promotion Project (ANEPP) was approved in 1988 under this Strategic Objective. The purpose of the program was (and still remains) to promote, diversify, and expand exportable agricultural commodities through appropriate policy research and analysis, planning for food security, export promotion, and proper handling of selected export commodities, through the resolving of public and private sector constraints to export promotion. The main result will be an increased range and value of NTAEs[1].

The purpose of this monitoring, evaluation and reporting plan is to provide the ANEPP project management with a guide that enables it to collect performance data and regularly monitor, analyze, review and assess the project's performance in order to:

(i) Make informed management decisions

(ii) Meet mission reporting requirements and

(iii) Enhance organizational learning

Project activities which will be monitored under this plan focus on constraints analysis to export promotion of public and private sector activities engaged in inputs to investment, production, marketing, processing and export of NTAEs, that influence the enabling environment for both export and investment. The broad project activities are:

- Agriculture and Trade Policy (Implemented by the Export Policy Analysis Unit (EPAU) of the Ministry of Trade and Industry)

  USAID/Uganda, through the ANEPP project, is in the forefront among donors in supporting the development of the policy agenda aimed at dislodging policy constraints which impair the success of NTAEs

- Export promotion programs (Implemented by Uganda Export Promotion Board (UEPB))

[1] Non-Traditional Agricultural Exports (NTAE) as defined by GOU

88

To realize the purpose of ANEPP, it will also be necessary to assure that complicated, ever-changing, difficult-to-obtain market information is constantly pursued, verified, analyzed, dis-aggregated, and disseminated. Alleviation of the lack of name recognition and negative brand reputation will be achieved through aggressive market promotion and attention to quality standards.

- Venture Capital (Implemented by the Development Finance Company of Uganda (DFCU)).

  Exporters and project implementors identified access to financing as an especially critical constraint to the expansion of non-traditional exports. The availability of venture capital will help to annul this constraint.

- Improved methods of Post Harvest Handling of produce which will reduce post harvest losses and improve the quality of the produce offered to the export or local market (Implemented by the PHH unit at Kawanda Research Institute (KARI)).

  The inability of farmers to adequately handle, process, and store harvested produce causes losses in both quality and quantity. ANEPP will contribute to the alleviation of this constraint through the provision of technical assistance to PHH and financing of training, research, technology transfer and information dissemination to the producers, traders and processors.

- Food Security and Early Warning System (Implemented by the National Early Warning and Food Information Unit (NEWFIU)).

  The GOU's objectives for the agricultural sector calls for both increased agricultural exports and food security for Ugandans. This direct linkage of development with food security requires a deep understanding of the causes of food insecurity, so that development can move forward without jeopardizing the food security of Ugandan citizens.

As indicated, each of these major activities (sub-projects) will be implemented by a partner NGO or government department. Specific monitoring and evaluation plans will be developed for each of the sub-projects which will be used to feed information into this ANEPP's major system.

This monitoring and evaluation plan is intended as a flexible guide rather than a strict recipe for M&E activities. Adjustments to the indicators and the methodology should be expected and indeed encouraged as a means of keeping in tune with project realities.

The information proceeding from the M&E system will be used by USAID, the implementing entities like the UEPB/EPAU, DFCU, the GOU (NEWFIU), the private sector, and the Post Harvest Handling (PHH) Unit at Kawanda in adjusting efforts to keep the project on course, as well as for reporting results to AID/Washington. USAID/Uganda will have overall M&E

89

responsibility and will review all reports.

II. EXPECTED RESULTS AND MEASUREMENT OF PERFORMANCE INDICATORS

Expected Results

ANEPP is one of the major strategy components aimed at achieving increased rural men's and women's income (SO 1). The project will contribute to this strategic objective through its goal, purpose and project outputs. Performance indicators have been identified for each level of results covering each of the project components. The attached log-frame presents the indicators associated with each result, suggested source of data and the critical assumptions.

Monitoring

Monitoring will include tracking and reporting End-of-Project Status (EOPS) indicators and outputs through periodic feedback from the various project affiliated entities mentioned above. Results achieved so far as reported in the previous Assessment of Program Impact (API), and the project evaluation will provide the baseline and progression of data required to measure achievement of planned outputs.

Although it is the "results package" represented by the log-frame that will be used to assess project performance, it is common knowledge that, for these results to be achieved, the activities under each of the components must be implemented on target. An "Activity Monitoring System (AMS)" will therefore be maintained as a supporting system to the Performance Monitoring System (PMS). The fundamental elements of the AMS will consist of a quarterly activity preparation form showing planned activities and activity targets for each quarter and the total for the year. Two weeks after the end of each quarter, each of the project component implementors will submit activity reports showing planned versus achieved activity targets and the year-to-date achievement on a standard form. USAID will design the formats to ensure standardization of activity codes for ease of computerization. A prototype AMS format is attached. The project officer will give narrative explanations for substantive deviations for any activity target whose achievement is below some given level (70% recommended) and for achievements above a maximum level (say 150 %). Suggestions for actions to "recover" by the next quarter or by the year-end will be included in the narrative. This report will form part of the performance monitoring report.

The project management will constitute a project "Result Package Team" which will conduct reviews and analyses of performance information at regular intervals to assess performance against expected results and to validate critical assumptions given in the log-frame. Quarterly reviews will be necessary in which the AMS and PMS reports will be reviewed. Constraints to achievements of targeted results will be discussed and solutions sought. A one or two day annual "Results Review Workshop" will be held to bring together all the participating institutions and customers to review progress towards end of project results, share lessons learnt during implementation and make necessary modifications to the strategies. The head of the "Strategic Objective Team" (at the moment this will also be the chief of the ANR division), a

91

representative of the PPD Office, representatives of the principal customers and stakeholders will participate in this annual meeting. The timing of this activity will be somewhere just before the commencement of the API report writing. Progress towards the project goal will be reviewed at this annual workshop. It may be time-saving and convinient to have all the projects under the SO hold this workshop jointly in order to come up with the "results package" for the SO.

Evaluation

The purpose of the evaluation will be to ensure the availability of evaluative feedback to improve the planning, management and performance of the mission's (and specifically ANR's) development programs and activities. While monitoring tracks progress towards established objectives, evaluation goes beyond monitoring to assess impact and effectiveness, and to consider possible design alterations.

The project results package team will take responsibility for:

(i) Deciding when a formal evaluation is necessary

(ii) Determining the focus, scope, and type of evaluation which can most efficiently meet management information needs.

(iii) Planning and managing the evaluation

(iv) Reviewing the findings, conclusions and recommendations and discussing these with the relevant partners, counterparts and customers.

(v) Compiling a "Lessons Learnt" report and submitting it to the chiefs of ANR division and PPD Office and to the Mission Director.

Customer surveys, value engineering (cost-effectiveness) and impact evaluation techniques with a participatory approach will be employed.

Although the project evaluation is planned at the end, decisions to commission an unscheduled evaluation may be triggered in one or more of the following circumstances:

(i) Project monitoring produces an unexpected trend on a critical scale.

(ii) Annual review indicates that expected results cannot be achieved by the adopted strategy components

(iii) Informal feedback from participants, partners, customers, or other informed observers suggest that implementation is not going on well or is not meeting the needs of intended customers/beneficiaries.

(iv) A total breakdown in a key assumption that challenge the validity of the strategy to achieve the objective occurs.

(v) Mission feels it important at a given stage to extract key lessons learned or document experience for the benefit of other missions or program development in the same country.

This project redesign has brought in new activities namely; i) the post harvest component, and ii) the food security and early warning component whose viability was thoroughly researched before they could be incorporated. Therefore to the extent possible, the redesign has got to address itself to the following questions, before and after project implementation as part of the evaluation process:

* Are the assumptions made at the time the project was designed still valid?

* Can the approaches and delivery mechanisms (EPAU, DFCU, PHH, NEWFIU) selected at the design stage operate effectively? How can they be improved?

* Has the project managed to resolve constraints to both private and public sector activities that would have anticipated impact on increasing range and value of NTAEs?

* What factors are facilitating or impeding progress?

* If there are any unanticipated factors impeding implementation? How well have they been addressed?

* Evaluate changes in the Ugandan and World Market environments influencing the Project activities.

* Analyze implications for project adjustments

Th is type of appraisal has been carried out by the various design teams attached to each component before the commencement of project activities. The long term advisor at PHH, for example, will address himself to the above questions and report his/her views to the project management. A mid-term evaluation will have to address itself to the above questions as well during this three year extension of ANEPP. The mid-term and final evaluation will draw the necessary data from case studies, and contextual reports from the project affiliated organizations.

Baseline and performance targets

Realistic performance targets must be set for each of the indicators that measure expected results. A realistic target is one that is achievable within the planned time and at the same time

93

representing a "significant" or "reasonable" change in the status that will appropriately contribute to achievement of the higher result. To set such targets, accurate baseline values of the indicators are essential. The project results package team and all the implementation partners will establish baselines for all performance indicators at both project and sub-project level results (goal, purpose, outcomes, activity outputs) directly supported by USAID activities. Baselines will reflect the value of each performance indicator at the commencement of USAID-supported activities that contribute to the achievement of the relevant result. This may, in some cases, require changes to the statement of the performance indicator.

Cases will arise where baseline data is not available from any reliable source. In such cases, a baseline survey may be necessary to establish the value of the indicator prior to the commencement of the USAID-supported activities. The design of such a baseline survey must be such that it will be replicated to new project sites and can be used during the evaluation. The baseline data collected may suggest an alteration to the target value of the performance indicator. Such an alteration will have to be approved by the strategic objective team or any appropriate authority.

Case studies:

The goal logical framework indicators will require use of case studies to track increases in income from agricultural exports. This data will be derived from selected sites for selected NTAEs. For example, taking a maximum of 3 out of the 9 NTAEs being grown in clearly bounded geographical areas (but not for Maize and Beans), for example, case No.1 could assess Vanilla, Chilies and Cut Flowers growing and exports revenues out of Mukono district. Case No.2 could assess Mushrooms, Snow peas and Pyrethrum growing and exports revenues out of Kabale district.

A sound methodology will be worked out to measure the product coming out of that area, and a census of producers, which will include the producers' own estimates of area cultivated and production. Data generated will be used together with the smallholder crop budget data from the Agricultural Secretariat to estimate incremental income. The approach to be used can be along the lines used by "Hivalue" effort which was taken for vanilla in Mukono by EPADU.

USAID will have to contract with a local firm to undertake these case studies in liaison with the IDEA project existing baseline information, under the supervision of the ANR M&E officer.

Availability and reliability of data

USAID will rely heavily on the data collection and processing efforts of participating NGOs/PVOs. In order to improve the quality and the timely availability of the data, USAID may choose to collaborate with or provide assistance to these entities. The assistance may be in the form of equipment, training, technical support and/or funding ad-hoc data collection activities.

94

The quality and reliability of the data reported by different development and data collection agencies vary considerably. These data variations need to be reconciled by bringing together the data reporting agencies, a step which USAID has already started. Where data reconciliation is difficult, the head of the "Result Package Team" should constitute and mobilize a working group to develop and establish the most reliable data source for each indicator which has multiple sources. The following considerations may guide the development of the criteria for preference:

Matrix for developing criteria for data reliability assessment

Aspect	Score				
	5	4	3	2	1
How appropriate is the regularity and frequency of data collection					
How soon is the data analyzed and reported					
How well does the collection methodology minimize sampling and enumeration errors					
(For time series data) How consistent is the methodology					
How much "primary" is the data? (primary data is collected at the point of transaction while secondary data is derived, projected, or extra/intra-polated)					
If secondary data, how realistic are the assumptions					
How clear is the documentation (will different investigators generate consistent data elements					

In that the system at the mission will always depend on reports from the participating institutions, USAID will be obliged to assist them develop their own management information systems (MIS) for improved timeliness and minimization of processing errors. A review of the MIS systems in the key project affliated units which are also the major sources of monitoring and evaluation information will be carried out on commencement of the project. A report on the necessary improvements will be generated and implemented by the project. The ANR M&E specialist (with possible collaboration from the REDSO/ESA program specialist (M&E)) will either carry out this exercise or develop TOR for a consultant to do it.

The impact of export promotion, advisory services, early warning and food information, post harvest handling will be assessed mainly through case studies of selected NTAEs to generate the goal level logical framework indicator. Achievement of the purpose-level indicators will be

tracked through EPAU records[2], GOU export and other relevant statistics departments. Performance and process indicators will be reported on a quarterly basis by each project affiliate with the assistance of long-term technical assistance personnel. Output indicators to be incorporated into the monitoring and reporting process are shown below. USAID's ANR will track accomplishment of outputs and output indicators as set forth in the logical framework with the cooperation of various relevant entities shown in the table below as well. EPAU in its new set-up will take up the lead role in assembling all the data collected from the various sources for purposes of comprehensive reporting to USAID, and other desrving parties.

Responsibility for data on performance indicators

Indicator	Source of Data	Responsible organization
Average $ value per producer (for selected sites)	Case Studies	USAID/ Local consultant
# NTAEs with value greater than $2 million	Project records	USAID
Annual $ value of NTAEs	Statistics Dept/Customs of MFEP	USAID,EPAU
# policy studies initiated by EPAU, conducted and reviewed by GOU and implemented	EPAU records	EPAU
# countries buying NTAEs from Uganda	UEPB reports	UEPB
Average $ NTAE value for top five countries	UEPB records	UEPB
# customers who have benefitted from market information	UEPB records	UEPB
# export contracts attained	census of target beneficiaries	USAID/UEPB
# NTAE ventures financed	DFCU records	DFCU
Value of loans disbursed by gender	DFCU records	DFCU
% of quantity lost in produce during PHH	PH loss estimates	PHH
% increase in export quality produce accepted on the market	Sample Survey	PHH
Timeliness of release of Early Warning and Food Information (EWFI)	customer survey	NEWFIU
# policy statements or actions taken as a result of the EWFI	NEWFIU records	NEWFIU

[2] EPAU contracts "MSE Consultants", a local consulting firm to derive NTEs volume and $ values form ISTC Customs data. This effort has been very fruitful and timely and is therefore recommended for continued funding by USAID.

90

III. ENVIRONMENTAL AND SOCIAL MONITORING

Environmental considerations will be tracked jointly with the IDEA project concerns. The two projects are complementary and have a similar goal, therefore any significant adverse environmental impacts resulting from project-related activities will be tracked through the joint Environmental Monitoring, Evaluation and Mitigation Plan (EMEMP). Not much environmental impact is envisaged under the ANEPP project activities per se but because it will be responsible for creating a conducive environment for expanded NTAE production, the EMEMP has been designed along both the ANEPP and IDEA projects to capture environmental effects generated by both projects. Use of fungicides and other pest control chemicals which will be encouraged by the PHH component will be monitored for possible effect.

The EMEMP consists of three major activities: (1) Environmental Impact Reviews; which have been done on five of the selected NTAE target sectors under IDEA, (2) a continuing environmental M&E Program, to monitor the environmental status of NTAE development in Uganda and effect any mitigative measures in a timely manner, and (3) a procedure for the environmental review of new entrants into the NTAE to provide more mitigative guidance as development plans and proposals become more definite. Implementation of the EMEMP is currently underway, with the National Environmental Information Center (NEIC) leading in the environment Baseline study to be conducted soon. The major achievement of the survey will, besides setting up a baseline, the framework for operationalization of the M & E program mentioned in (2) above. This joint approach to meeting projects environmental requirements provides an efficient and effective application of resources. As soon as the framwork and methodologies for environmental M&E are set, NIEC will retain the coordination portfolio while the day-today monitoring activities will be integrated into the components of NTAE promoting projects like ANNEP and IDEA. During the quarterly result reviews, the environmental component will also be reported and mitigative measures proposed when and where need is odentified.

Regarding the fact that the woman's time in the livelihood of the entire family is so critical in the rural set-up, the Post Harvest Handling component will be expected to have a positive impact in the reduction of drudgery in the post harvest activities carried out by women and contribute to the reduction of the mothers' time spent on post harvest activities by introduction of the new technologies. Data on this will be included in the case studies.

IV. MANAGEMENT INFORMATION SYSTEMS

A computerized MIS will be developed and implemented at the USAID ANEP project M&E office. The major parts of the system will be to input data from the project and sub-projects M&E information, process the data (validation, aggregation and computations) and produce appropriate reports for the quarterly performance review meeting and other ad-hoc users. The specific components of this system will include:

91

(i) Pre-designed data gathering forms

(ii) Database structure compatible with the data gathering forms.

(iii) Documented system of data entry, verification and maintenance.

(iv) Defined responsibilities for completion and collection of data forms

(v) Deadlines for each level of reporting

(vi) Adequate computer capacity

(vii) Training for users at all levels

(viii) Computer security and backup procedures

(ix) Accuracy, appropriateness and timeliness of reports generated.

USAID will support the development of similar and compatible information systems for the key affliate institutions that are reporting results under the project.

V. WORKPLAN

The Monitoring and Evaluation Work Plan which details tasks, responsibilities and scheduling is shown below. USAID has overall supervisory responsibility and will coordinate monitoring of GOU activities, receiving and access data from progress reports from various government agencies and project affiliated organizations for purposes of USAID periodic reporting. EPAU will take the lead in monitoring results of policy interventions and growth in exports, while the PHH will help in tracking transfer and use of post-harvest technologies, and the early warning unit will be responsible for food situation monitoring and mitigation..

MONITORING AND EVALUATION WORK PLAN

PRINCIPLE TASKS AND DELIVERABLES	RESPONSIBLE AGENCY	SCHEDULE			
		YEAR 1995: 7 8 9 10 11 12	YEAR 1996: 1 2 3 4 5 6 7 8 9 10 11 12	YEAR 1997: 1 2 3 4 5 6 7 8 9 10 11 12	YEAR 1998: 1 2 3 4 5 6 7 8 9 10 11 12
Supervise Monitoring and Evaluation	USAID	———	———	———	———
ANR M&E Data Collection	USAID	———	———	———	———
Case Studies (Rapid Appraisal)	USAID/ST CONTRACT			●●	●●
	PHH				
PHH Quarterly Progress Reports to USAID	EPAU/ST Contract		●●	●●	●●
EPAU Surveys & Quarterly Progress Reports to USAID			●●	●●	
	DFCU				●●
DFCU Progress reports				●●	●●
NEWFIU Progress reports	NEWFIU		●●	●●	●●
Input for API(SO1) to AID/W	USAID		●●		●●
Mid-term evaluation	USAID		●●		●●
Final Evaluation	USAID				

——— continuous activity, ●● due date.

workplan also to include:

Development of Activity Monitoring System formats and worksheets
Design of MIS at ANEPP M&E office (USAID)
Review of MIS at key implementation institutions
Improvement of MIS at these institutions
Quarterly Results Review meetings
Annual Results Review workshop

PHH - Kawanda

ANNUAL CONTRIBUTION BY THE GOVERNMENT OF UGANDA

				Total
1.	**Staff Salaries**			
	10	Seminar scientist	x180,000x12 months	21,600,000
	8	District staff	x 80,000x12 months	7,680,000
	5	Technicians	102,000x12 months	6,120,000
2.	**Housing**			
	10	Seminar scientist	x 90,000 x12 months	10,800,000
	8	District staff	x 40,000 x12 months	3,840,000
	5	Technicians	x 51,000 x12 months	3,060,000
3.	**Medical and Education contribution**			
	10	Senior scientists	x 36,000 x12 months	4,320,000
	5	Technicians	x 20,400 x12 months	1,224,000
			SUB-TOTAL	58,644,000,

4	Cost-sharing for staff allowance as determined by counterpart budget provision.	(determined during annual budgeting)
5.	Cost- sharing for vehicle maintenance and running cost as determined by counterpart budget provision	(determined during annual budgeting)

6.	**Office accommodation**		
	Offices	100,000 x 12 months	1,200,000
	Laboratory	50,000 x 12 months	1,600,000
	Foundry	100,000 x 12 months	1,200,000
	Farm-yard	30,000 x 12 months	360,000

7. **Other**

Water	30,000x 12 month	360,000
Electricity	100,000x 12 month	1,200,000
Telephone	100,000x 12 month	1,200,000
	SUB TOTAL	6,120,000
	GRAND-TOTAL	**64,744,000** *

NB. Cost-sharing as in allowances and vehicle cost are determined per annual counterpart budget provision to the Post-harvest programme

69,467.
at 932

1. Local salaries and wages

3 Poters Group	A	20,007 x 3 x 11 months	=	660,231
1 Messenger "	C	20,042 x 1 x 11 months	=	220,462
1 Driver "	H	20,439 x 1 x 11 months	=	224,829
1 Copy Typist"	O	25,482 x 1 x 11 months	=	280,302
3 Lab/Field Assis.	J	20,592 x 3 x 11 months	=	679,536
		Sub-Total		2,065,360

Overtime allowances 10% of wages	=	20,650
Consolidated allowances 5,000 x 9 x 11 months	=	495,000
Total local salaries & wages		**2,581,010**

2. Allowances

The allowances cover on official duty while on project activities

1. Loss Assessment, surveys for selected parishes
2. Regular surveillance/monitoring of demonstration for the dreadful pest the Larger Grain Borer.
3. Building and monitoring of demonstration sites on farmers farms.
4. Field tests of new technologies development developed at Kawanda.

Night allowances

7 Research Scientist @ 1 night at 48,000 7 x 48,000 x 3 x 11 months	=	3,696,000
9 Lab. Technicians @ 1 night at 30,000 pm 9 x 30,000 x 1 x 11 months	=	2,970,000
5 A.O. Field Official @ 1 night at 48,000 pm 5 x 48,000 x 1 x 11 months	=	2,640,000
5 A.A.O Field officials 1 night at 30,000 5 x 30,000 x 1 x 11 months	=	1,650,000
2 Drivers @ 3 nights at 25,000 pm 2 x 3 x 25,000 x 11 months	=	1,650,000
1 Accounts Assistant @ 1 night at 30,000 1 x 1 x 30,000 x 11 months	=	330,000

Safari Day allowance

7 Research Scientists @ 1 day at 5,000 7 x 1 x 5,000 x 11 months	=	1,540,000
9 Lab. Technicians 1 day at 4,000 9 x 3 x 4,000 x 11 months	=	1,188,000
5 A.O's Field officers @ 3 days at 5,000 5 x 3 x 5,000 x 11 months	=	825,000
5 A.A.O's Field officers @ 3 days at 4,000 5 x 3 x 4,000 x 11 months	=	660,000
2 Drivers @ 3 days at 3,000 2 x 3 x 3,000 x 11 months	=	198,000
1 Accountant @ 3 days at 4,000 1 x 3 x 4,000 x 11 months		132,000
Sub-Total		**4,543,000**
Total incentives & Allow.		**17,479,000**

3. Training

1 Course at Regional DFI (Tororo and Mukono DFI) Feeding and Lodging 1 course x 40 participants for 7 days @ 1 x 40 x 8,000 x 7 days	=	2,240,000
Transport refunds to participants average 1 x 40 x 20,000	=	800,000
Construction materials and other supplies for 1 course E.g. (nails, poles iron sheets and grass)	=	500,000
Remuneration for resource personnel 1 course x 7 papers x 8 personnel x 20,000	=	1,120,000

Stationery for 1 course

25 Reams of ruled papers	=	100,000
30 Reams of photocopying papers @	=	50,000
8 packets of Bic pens	=	20,000
20 dozens of pencils	=	10,000
40 note books	=	10,000
20 dozens of rulers		15,000

113

4. Operation and Maintenance of vehicles

Postharvest programme has 1 110 Land rovers for official movements.

Numbers	Capacity	Average p.m.	Annual cost
UA1647	2286c.cL/Rover	560,000	6,720,000
	Total operation & Maint. of vehicle		**6,720,000**

5. Consumable

100 Reams of photocopying papers	@	8,500/=	850,000
100 Reams of duplicating papers	@	6,000/=	600,000
100 packet of office pins	@	450/=	45,000
200 Field note books	@	1,000/=	200,000
20 packet of Bic pens	@	7,500/=	150,000
50 Box files	@	3,000/=	150,000
5 packets of carbon paper	@	2,500/=	12,500
4 punches	@	10,000/=	40,000
10 x 50Kg bags of sugar	@	40,000/=	400,000
25Kg coffee/tea	@	1,000/=	25,000
1000 envelopes size 9" x 4"	@	100/=	100,000
20 Rolls of cellotape	@	1,500/=	30,000
15 dozen of Rulers	@	1,200/=	18,000
50 official diary book	@	3,000/=	150,000
200 copies of postharvest printed book	@	5,000/=	800,000
50 overalls for Lab/Assist.	@	15,000/=	750,000
Postage by mail/EMS/DHL/Fax			500,000
Exhibitions			1,000,000
Total consumable			**5,820,500**

GRAND TOTAL Shs. 37,465,510

104