PD-ABP-059 cc: GC/LE S+T/POP
93903

FAMILY HEALTH INTERNATIONAL

October 13, 1989

Mr. Stephen A. Dean
Contracting Officer
United States Agency for
International Development
Office of Procurement
Room 1543 SA14
Washington, D.C. 20231

Re: Disclosure to A.I.D. of Inventions Relating to Work Funded in Part Under Family Health International/A.I.D. Cooperative Agreement (AID/DPE-0537-A-00-4047-00, 30 September 1985 - 29 September 1990)

Dear Mr. Dean:

We wish to bring to your attention an important development which has been occurring under the above referenced Cooperative Agreement, namely the Polymer Condom Project.

The early history of the Project reflects an independent development and funding effort by FHI in which concepts relating to the polymer condom technology were originally generated and certain "proof of principle" work was done. More recently this Project has taken on a co-funded character with the A.I.D. participation forthcoming under the Cooperative Agreement. Because of the early history the initial polymer condom inventions were treated as proprietary matters. In view of the current co-funding and the future development plans, FHI now believes that these inventions should be treated in the spirit of the patent rights provision of OMB Circular A-124, that is, as subject inventions which form a part of the FHI/A.I.D. Cooperative Agreement.

There does not appear to be available procedural precedence reflecting the earlier proprietary stage, that would guide current treatment. As a consequence, and in recognition of the current co-funded character of the polymer condom project, FHI requests allocation by A.I.D. of Principal Rights in these inventions to FHI, in accordance with Paragraph b. of the OMB Circular A-124. Nevertheless, in these circumstances, FHI would expect that the Principal Rights accorded would not preclude FHI's practical application of so important a product anywhere in the world through the most expeditious and cost-effective technical methods and/or commercial approaches.

FHI P.O. Box 13950 • Research Triangle Park, NC 27709 USA
Telephone: 919/544-7040 • Telex: 579442 • Fax: 919/544-7261 • Cable: FAMHEALTH

This allocation of Principal Rights to FHI under the Cooperative Agreement is requested in view of (1) FHI's position as the originating entity for the technology, (2) FHI's commitment to implementation of this technology with all deliberate speed in view of its potential importance to the public health and to the prevention of sexually transmitted diseases, including acquired immune deficiency syndrome (AIDS), and (3) FHI's commitment to apply all net revenues from any commercialization of the plastic condom technology to further research and development on improved methods and devices for contraception, and the treatment and prevention of sexually transmitted diseases.

The attached appendices will provide you with background information on the Polymer Condom Project. Inasmuch as patent applications have already been filed on the inventions previously conceived and/or reduced to practice by FHI in the Project, and further patent activity is being undertaken by FHI at the present time on additional inventions, a summary listing of all of these inventions ("Subject Inventions") is set forth in Appendix A hereof.

Appendix A specifically includes a summary listing of all patent applications relating to polymer condom technology filed by FHI to date, identifying the title, the U.S. or international patent application number, filing date, and current status. This appendix further includes a summary description of inventions for which patent action is in progress or is contemplated in the near term.

Copies of the filed Appendix A patent applications are attached in Appendix B, and invention disclosure documents relating to the subject matter for which patent applications have not been, but will be filed, are included in Appendix C.

Set out in Appendix D hereof is a description of the Polymer Condom Project through its major milestones. This appendix amply reflects the significant commitment and organizational effort by FHI given to the Polymer Condom Project.

In view of FHI's belief that the related polymer condom patents can now be treated as subject inventions which form part of the FHI/A.I.D. Cooperative Agreement, we propose that the presently pending FHI U.S. patent applications relating to this technology be amended to include the following statement: "This invention was made with partial Government support under Cooperative Agreement AID/DPE-0537A-00-4047-00 awarded by the United States Agency for International Development. The Government has certain rights in this invention."

Amending the patent application to include this statement would be consistent with paragraph f.(4) of OMB Circular A-124. Correspondingly, FHI proposes that future U.S. patent applications arising out of the Polymer Condom Project and based on work funded at least in part by A.I.D. under the Cooperative Agreement would also contain the above-quoted statement.

FHI would further propose that the OMB Circular A-124 allocation, disclosure and election, etc., requirements be applicable in the further conduct of this Project without limiting FHI's full access rights to the polymer condom inventions for their further development and practical application or commercialization.

The Agency for International Development is therefore requested to acknowledge this submission, and to confirm ownership in FHI of the Principal Rights in the Subject Inventions herein reported.

Sincerely,

Robert W. Hughes
Vice President of Administration/Controller

AJP/sj/1408
Enclosures

APPENDICES A, B, C, D
FOR:

Disclosure to A.I.D. of Inventions Relating to
Work Funded in Part Under Family Health International/
A.I.D. Cooperative Agreement #AID/DPE-0537-A-00-4047-00
30 September 1985 - 29 September 1990

APPENDIX A

F.H.I. PROPRIETARY INFORMATION

FAMILY HEALTH INTERNATIONAL - POLYMER CONDOM PROJECT/INTELLECTUAL PROPERTY PORTFOLIO

Attorney File Reference	Title	U.S./International Patent Application No.	Filing Date	Current Status
FAHI 5004P	"CONDOM ARTICLE, AND METHOD OF MAKING THE SAME"	07/199,030	5/26/88	Pending
FAHI 5006P	"CONDOM ARTICLES, AND APPARATUS AND METHOD FOR MAKING THE AND USING THE SAME"	07/271,884	11/15/88	Pending
FAHI 5014P	"CONDOM ARTICLE AND METHOD OF MAKING THE SAME" (International Counterpart of FAHI 5004P)	PCT/US89/01532 (designates for protection; Europe (EPC Counties), Australia, Denmark, Finland, Japan, Republic of Korea, and Norway)	4/12/89	Pending
FAHI 5008P	"PORTABLE TENSILE TESTOR FOR TESTING OF CONDOMS"	not filed on	not filed on	may be retained as a trade secret
FAHI 5009P	"PRINTED AND/OR DYED THERMO-PLASTIC ELASTOMER ARTICLES"	not filed	not filed	commercial prospects still under consideration
FAHI 5012P	"CONDOM WITH HEMISPHERICAL DIMPLING AT PROXIMAL OPENING"	not filed	not filed	commercial prospects still under consideration
FAHI 5017P	"CONDOM PACKAGE"	not filed	not filed	commercial prospects still under consideration

APPENDIX B

FAHI 5004P

APPLICATION FOR LETTERS PATENT

OF

ROBIN G. FOLDESY

AND

ROBERT C. WHEELER

FOR

"CONDOM ARTICLE, AND METHOD
OF MAKING THE SAME"

8

BACKGROUND OF THE INVENTION

Field of the Invention

The present invention relates to a condom article and method for making the same.

Description of the Art

In recent years, there has been a significant increase in the incidence and spread of sexually transmitted diseases, and this phenomenon has in turn caused an increased use of condoms as a prophylatic measure to reduce the risk of infection and transmission of such diseases.

Among the reasons for the increase in incidence and rate of transmission of sexually transmitted diseases (STD's) are the development of increasingly antibiotic-resistant strains of disease-causing organisms, e.g., those responsible for diseases such as syphillis and gonorrhea. Another factor has been the absence of any effective cure for acquired immunodeficiency syndrome (AIDS).

Recent disclosures by the Centers for Disease Control (Washington and Atlanta), and reports at the Third International AIDS Conference in Washington, D.C. in June, 1987, have focused international attention on the proliferation of acquired immunedeficiency syndrome (AIDS) in the general population, beyond the originally defined high-risk classification groups of homosexuals, bisexuals, intravenous drug users, and Haitain/African groups.

The diseases with which AIDS has been or is suspected to be linked include Pneumocystis carinii pneumonia, Kaposi's

sarcoma, esophageal or bronchopulmonary candidiasis, extra-pulmonary cryptococcosis, cytomegalovirus internal organ infection, disseminated Mycobacterium avium complex or M. kansasii infection, chronic herpes simplex ulceration, chronic cryptosporidiosis enteritis, toxoplasmosis of the brain, high-grade B-cell non-Hodgkin's lymphoma, disseminated histoplasmosis, chronic isosporiasis enteritis, and lymphoid interstitial pneumonia in children.

In a recent San Franciso cohort study reported in "AIDS: The Cost in Health and Lives," Selik, M. D. Richard M., et al, The Internist, April, 1987, p.p. 6 et seq., there was found to be, for every case of AIDS in the group studied, nine cases of other HIV-related morbidity. As also indicated in this article, cohort follow-up studies indicate that the proportion of HIV-infected persons who will ultimately develop AIDS ranges from 25% to 50% or more depending on the length of follow-up and the patient's clinical status at the beginning of the study. Mathematical modeling of this trend in reported AIDS cases has led to a projection that the cummulative total of AIDS cases will be 270,000 by 1991, and the number reported that year alone will be 74,000.

Against the foregoing background, and the recognition that condoms afford a safe, low cost, and generally reliable means for combating the spread of STD's, including AIDS, there has been an increased demand for condoms in developed, as well as developing countries, where some governments are distributing condoms to their citizens at no charge, to minimize the spread of STD's. As a result of the mass distribution of condom products, there is a need in the industry for the development of low cost, storage-stable condoms which are readily and simply produced in mass quantities, by methods and apparatus entailing low capital investment requirements.

Currently, most condoms are produced from a latex resin via a dipping process in which a cylindrical and rounded-end mold is dipped into a resin bath, so that the mold is coated with a thin layer of the latex material. The thickness of the latex coating on the mold is dependent on the viscosity of the latex, and the speed of extracting the mold from the latex bath. Similar latex dipping processes have been employed with suitably shaped molds to form tight-fitting gloves such as surgical gloves.

The above-described latex resin dipping process has been utilized for decades, and yields a generally satisfactory barrier product at reasonable cost.

With the recent spread of AIDS in the general population and the resurgence of condom usage in sexual activities, there has been interest in improving the strength and reliability characteristics of condoms, and of achieving improvements in manufacturing processes and economics, to further combat the spread of STD's generally, and AIDS specifically, as well as to provide a safe and reliable contraceptive means.

U.S. patent 4,576,156 issued March 18, 1986 to Manfred F. Dyke discloses a condom formed of a thermoplastic polyurethane material, having a generally cylindrical configuration with an open proximal end and a closed distal end. The disclosed condom has a thickness of from about 0.01 millimeters, or less, to about 0.25 millimeters. The thermoplastic polyurethane employed to form the condom is disclosed as having: an average Shore A hardness of from about 50 to about 90; a tensile stress, at 100% of elongation, between about 300 and 1,000 psi; and a tensile stress, at 300% elongation, between about 800 and 3,000 psi. Suitable thermoplastic polyurethane

species for manufacturing the condom include those set out at column 2, line 55 to column 3, line 10 of the Dyke patent, with polyether- or polyester- based urethane elastomers said to be preferred. In the manufacture of the thermoplastic polyurethane condom disclosed in the Dyke patent, a film of the polyurethane material, e.g., in the form of a 6-inch square, is heated to a temperature high enough to soften the polymer but low enough to avoid chemical degradation, preferably in a clamping frame, and at a temperature of about 400-500°F. The heated film then is brought into contact with a preformed mandril to cause the film to assume the shape of the mandril, preferably with application of a vacuum to the system in order to bring about uniformity in wall thickness (column 3, lines 47-50 of the patent).

In an illustrative example described at column 4, lines 22-38 of the Dyke patent, an extruded film of Pellethane® X5036-80AA polyurethane (The UpJohn Company, Kalamazoo, Michigan) is clamped on a clamping frame and heated at 460°F for 180-200 seconds, following which vacuum is drawn on the film and the mandril moved downward into the film. Vacuum is shut off as the mandril moves into the film, then is applied at the base of the mandril after it has moved down into the film completely, such vacuum causing the film to pull down tightly and assume the shape of the mandril. After 30-100 seconds of vacuum forming in this manner, the vacuum is released, excess material at the base is cut off, and the film is partly rolled up onto itself for a distance of about 3 inches, on the 10-inch mandril, and then is dusted with powder and rolled up until it is removeable from the mandril.

Although the Dyke patent describes the condom product as having substantially uniform wall thickness, it will be recognized

that the deformation of the thermoplastic polyurethane sheet with the heated mandril will inherently cause stretching and localized stresses and thinning, which in turn will cause non-uniformity of thickness over the entire areal extent of the condom article. Further, the nature of the deformation process using the preheated mandril is such that localized thermal stresses and temperature gradients will be developed, which may significantly adversely affect the strength and use characteristics of the condom product. In addition, the cutoff of excess material at the base of the mandril following the forming operation will result in significant wasteage of material and/or the necessity to rework such material in the process system. Finally, the use of small units of the polyurethane film, such as the 6-inch squares disclosed in the patent, entails significant disadvantages in terms of materials handling and the processing of the film stock, and may also entail significant material wasteage and/or reworking of material.

European patent application 0 147 072 published July 3, 1985 in the names of Robert A. Taller, et al, discloses a process for making a polyurethane condom with a uniform thickness of from about 1.5 to about 4 mils. A heat cured polyurethane prepolymer solvent solution is employed into which a mold is dipped and withdrawn for heat curing on the mold. The polyurethane prepolymer which is employed in the dipping medium is a prepolymer which is the reaction product of a polyisocyanate with at least one long chain polyol. The polyol is amorphous at room temperature, has an average molecular weight of from about 500 to about 5,000, a hydroxy number of from 225 to about 22.4, and a NCO/OH ratio of from about 0.95:1 to about 1.1:1.

The above-described process suffers the deficiencies inherent in all resin bath dipping methods for forming condoms, including slow processing times on a unit product basis, so that many dipping systems must be provided and concurrently operated to achieve high volume production.

For example, the European application states at page 7, line 18, that the condom mold may be dipped into and withdrawn from the polyurethane solution at a rate of about 16 to about 90 centimeters per minute; lines 25-27 at the same page of this application indicate that the dwell time of the condom form in the polyurethane prepolymer solution is on the order of from about 20 to about 70 seconds.

Once the mold is withdrawn from the solution, the polyurethane film deposited on the dipped form is air dried and then cured at elevated temperature, e.g., between about 130°C and about 175°C, for about 20 to about 40 minutes, as disclosed at page 7, lines 33-35 of the application.

The polyurethanes employed in the process of the European patent application are segmented block copolymers constituted by alternating sequences of hard rigid segments and soft, flexible segments, in which the hard segment and the degree of crosslinking are balanced within the ranges of approximately 14-25 percent hard segment and approximately 5,000-30,000 molecular weight per cross link. The application states that the polyurethane polymers employed in the disclosed process provide a Shore A durometer hardness of about 35 to 60. Page 10, lines 19-22 of the application state that representative polyurethane polymers comprise from about 13% to about 23% isocyanate, from about 70% to about 84% long chain diol, and from about 0.75% to about 6% of a crosslinker.

A further disadvantage of the process of this European application is that the polyurethane prepolymer is utilized in

solvent solution. Methylene chloride is disclosed as particularly convenient in such usage. The patent application discloses at page 15, lines 35-38 that the resin solution is maintained at a temperature between about 15° and about 25°C to control viscosity and help prevent evaporation of the volatile solvent. Accordingly, the resin solution and the condom forms must be maintained at a low temperature to minimize loss of volatile solvent from the dip coating system.

It is accordingly an object of the present invention to provide an improved condom which is readily, simply, and inexpensively formed.

It is another object of the invention to provide a method for forming a condom of such type, which facilitates mass production of the condom.

Other objects and advantages of the present invention will be more fully apparent from the ensuing disclosure and appended claims.

SUMMARY OF THE INVENTION

The present invention relates to a novel condom comprising a tubular main sheath portion, closed at a distal end and open at a proximal end thereof.

Such condom be for example be formed of a thermoplastic elastomeric material or a suitable polymeric non-elastomeric material, and may advantageously be made by a process including blown film formation of the tubular main sheath portion.

In one preferred aspect, the present invention relates to a condom comprising a blown film tubular main sheath portion formed of a polyurethane material, e.g., a polyester-based

polyurethane, having a specific gravity of from about 1.15 to about 1.25, a Shore A hardness of from about 80 to 95, a break tensile stress of from about 4500 to about 6,000 psi, a tensile stress at 50% elongation of from about 720 to about 2400 psi, an ultimate elongation of from about 450% to about 600%, a flexural modulus of from about 4,000 to about 37,000 psi, and a tear strength of from about 500 to about 1,000 pli.

In another preferred aspect, the present invention relates to a condom comprising a blown film tubular main sheath portion formed of a multiblock rubber-based copolymer material, e.g., a multiblock rubber-based copolymer material having a Shore A hardness from about 25 to about 100, a tensile strength of from about 500 to about 4500, a 300% modulus of from about 120 to about 1,000 psi, and an ultimate elongation of from about 200 to about 1400%.

In still another aspect, the present invention relates to a method of making a condom, comprising the steps of:

(a) blow forming a tubular film of a thermoplastic material; and

(b) sealing one end of said tubular film.

The blow forming step in the method described in the preceding paragraph may comprise blow extrusion forming, or alternatively blow molding, of the tubular film article.

Other aspects and features of the invention will be more fully apparent from the ensuing disclosure and appended claims.

BRIEF DESCRIPTION OF THE DRAWINGS

Figure 1 is a partial sectional, elevational view of an illustrative condom according to one embodiment of the present invention.

Figure 2 is a partial sectional, elevational view of an illustrative condom according to another embodiment of the present invention.

DETAILED DESCRIPTION OF THE INVENTION, AND PREFERRED EMBODIMENTS THEREOF

The condom article of the present invention is of a general type having a tubular main sheath portion, closed at a distal end and open at a proximal end thereof.

Illustrative condom articles of such type are shown in Figures 1 and 2 hereof.

With reference to Figure 1, there is shown a condom 10 comprising a tubular main sheath portion 12. The condom has an open proximal end 14, which as shown, may be circumferentially bounded by retaining ring 16. The condom is closed at its distal end 18.

Figure 2 shows a condom of generally corresponding construction, wherein all elements analogous to those of the Figure 1 condom are identified by corresponding reference numerals to which 100 has been added. The Figure 2 condom differs from that shown in Figure 1, however, by the addition of a distal tip reservoir 122 at the distal end 118 of the condom, for retention of ejaculate during use of the condom.

The condom of the present invention may advantageously be formed by blow forming the tubular main sheath portion of the condom from a suitable thermoplastic material. As used herein, the term "blow forming" is intended to be broadly construed to include (1) blow extrusion forming, in which a tubular film of a thermoplastic material is extruded and a pressurized fluid introduced in its interior, typically an air "bubble," whose pressure and flow rate determines the dimensional characteristics of the blown tubular film, and (2) blow molding, in which a tube of heated thermoplastic material is passed into an enclosing mold where a pressurized gas inside the tubular film expands the film into contact with the interior surfaces of the mold.

Irrespective of the specific type of blow formation technique empolyed to form the tubular main sheath portion of the condom article of the invention, the diameter of the tubular main sheath portion should be of a size commensurate with its intended use as a barrier means overfitting a male penis.

The condom articles of the invention may be of generally cylindrical shape, as in the illustrative embodiments of Figures 1 and 2 described hereinabove. Alternatively, it may be suitable in some instances to utilize the condom of the present invention in the form of a baggy-type penile enclosure which is wrapped about the penis for use, and retained in relatively looser configuration on the penis than are the condom articles shown in Figures 1 and 2, which are of a type closely overfitting the penis, and rolled or pulled onto the penis for use.

Thus, the specific structure of the condom article of the present invention may be widely varied, depending on the mode of application intended, and the specific materials of construction employed.

The materials useful for forming the condom articles of the present invention may variously include thermoplastic materials such as elastomeric thermoplastic materials, as well as non-elastomeric materials such as olefinic homopolymers and copolymers, e.g., ultra-low density polyethylene.

As used herein, the term "elastomeric" in reference to thermoplastic materials useful for forming condom articles in accordance with the present invention, means a material which subsequent to elongation thereof under an applied tensional force, regains at least a significant portion of its original dimensional characteristics when the applied tensional force is released.

Illustrative of thermoplastic elastomeric materials which may find utility in the broad practice of the present invention are: polyurethane materials, as for example the polyester-based polyurethane material commercially available from Mobay Corporation (Plastics and Rubber Division, Pittsburgh, Pennsylvania) under the trademark Texin®; polyester elastomers, such as the block copolymers of polybutylene terephthalate and long-chain polyether glycols, which are available commercially from E. I. Du Pont de Nemours and Company, Inc. (Polymer Products Department, Engineering Polymers Division, Wilmington, Delaware) under the trademark HYTREL®; polyether blockamides, such as those commercially available from Atochem, Inc. (Glennrock, New Jersey) under the trademark Pebax®; multiblock rubber-based

copolymers, particuarly those in which the rubber block component is based on butadiene, isoprene, or ethylene/butylene, such as the multiblock rubber-based copolymers commercially available from Shell Chemical Company (Houston, Texas) under the trademark Kraton®; ethylene-octene copolymers such as those commercially avaiable from The Dow Chemical Company (Midland, Michigan) under the trademark ATTANE™; as well as any other suitable homopolymers and copolymers, and mixtures, alloys, and composites thereof.

Among the foregoing materials, polyester-based polyurethanes, and multiblock rubber-based copolymers are most particularly preferred.

The composition of multiblock rubber-based copolymers employed as materials of construction for the condom articles of the present invention may be varied widely, it being understood that the non-rubber repeating units of the copolymer may be derived from any suitable monomer(s), as for example, (meth)acrylate esters, such as methyl methacrylate, cyclohexylmethacrylate, etc.; vinyl arylenes, such as styrene; etc.

In general, the non-rubber blocks in the multiblock rubber-based copolymer preferably are derived from monomer(s) which are non-elastomeric in character, so that "soft" rubber blocks and "hard" non-elastomeric blocks are provided in the multblock copolymer. Such hard blocks may suitably be derived from monomers having a glass transition temperature (T_g) of at least about 50°C, with styrene being generally preferred. The rubber block of such multiblock copolymers may be formed of repeating units derived from synthetic rubbers such as butadiene, isoprene, ethylene/butylene, etc., with butadiene and ethylene/butylene elastomeric blocks generally being preferred.

20

The most preferred multiblock rubber-based copolymers are those having an A-B-A structure comprising polystyrene endblocks and an elastomeric midblock.

Illustrative multiblock butadiene-based copolymers which may be usefully employed in the broad practice of the present invention include those variously described in U.S. Patent Nos. 3,297,793; 3,595,942; 3,402,159; 3,842,029; and 3,694,523, the disclosures of which hereby are incorporated by reference herein. Various multiblock butadiene-styrene copolymers may be usefully employed to form the condom of the present invention, such as the aforementioned triblock ethylene-butadiene-styrene copolymers commercially available under the trademark Kraton™ from Shell Chemical Company (Houston, Texas) and small block butadiene-styrene copolymers commercialized by Firestone Synthetic Rubber & Latex Company (Akron, Ohio) under the trademark Stereon®.

In the general use of a multiblock rubber-based copolymer as the material of construction for the condom article of the present invention, the copolymer material preferably is characterized by the following physical properties: a Shore A hardness of from about 25 to about 100; a tensile strength of from about 500 to about 4500; a 300% modulus of from about 120 to about 1,000 psi; and an ultimate elongation of from about 200 to about 1400%.

With reference to the use of polyurethanes as materials of construction for the condom of the present invention, preferred material characteristics include: a specific gravity of from about 1.15 to about 1.25, a Shore A hardness from about 80 to about 95, a break tensile stress from about 4500 to about 6,000 psi; a tensile stress at 50% elongation of

from about 720 to about 2400 psi, an ultimate elongation of from about 450% to about 600%, a flexural modulus of from about 4,000 to about 37,000 psi, and a tear strength of from about 500 to about 1,000 pli.

It will be recognized that processing conditions and apparatus may be varied widely in blow forming the tubular main sheath portions of condoms in accordance with the present invention, depending on the specific thermoplastic material employed in the blow forming operation, the volumetric space requirements of the process system, the method and apparatus employed for closure of the distal end of the tubular main sheath portion to form the finished condom structure, etc. The choice of specific processing conditions, materials, and the like may readily be determined for a given product application without undue experimentation, by those skilled in the art.

In blow extrusion forming of the main sheath portion of the condom, by way of example, the temperatures over a three-zone extruder may illustratively range from about 300° to about 380° Fahrenheit for a polyester-based polyurethane material or a multiblock butadiene-based styrene copolymer, while the temperature range in the same extruder for an ultra low density ethylene-octene copolymer or a polyether block amide may range from about 400° to about 450°F; associated therewith are blow pressures which may range from 1 to 12 ounces per square inch of blown film, depending on the specific material employed.

When blow extrusion is utilized as the method for blow forming the tubular main sheath portion of the condom, the resulting tubular article has two open ends, and one of such

open ends is sealingly closed to form the final condom article. The end closure operation may be carried out in any suitable manner, and preferably is automated so as to accommodate high speed manufacture of the condom article in high volume. Thus, the tubular body formed by blow extrusion may concurrently be sealed and severed at regular intervals along its length, to accommodate continuous processing.

The closure of the blow extruded tubular main sheath portion preferably is carried out by heat sealing, as is advantageous from the standpoint of thermoplastic materials being employed to form the condom.

The specific method of closure will depend largely on the specific material of construction employed for the tubular sheath portion of the condom, as well as its thickness. The wall thickness of the condom article may vary widely, but preferably is on the order of from about 0.05 to about 0.25 millimeter.

With such low thicknesses, it is important that the sealing method not produce differential stresses or other material deficiencies in the tubular main sheath in the vicinity of the distal end seal. Accordingly, when heat sealing is employed as a closure technique for forming the enclosed distal end of the condom, thermal impulse heat sealing is highly preferred, since it can initiate the sealing process at low temperature, with the material to be sealed thereafter quickly rising to the desired high sealing temperature, and then quickly returning to ambient temperature. Thus, rapid sealing of a localized region is effected, in a manner which prevents nearby regions of the film being sealed from experiencing substantial temperature changes, such as might otherwise result in undesirable change of material properties in the vicinity of the seal. This

consideration is particularly important in thinner films, e.g., with material thicknesses on the order of 0.05 millimeter, or lower, up to approximately 0.1 millimeter.

Thus, in a continuous process blow extrusion system, wherein the blown film tube is continuously formed into discrete condom articles, the sealing method may be combined with, or otherwise effect, severing of the film into discrete tubular segments for the desired product articles. For example, it may be possible to utilize an ultrasonic sealing assembly comprising an ultrasonic horn having associated therewith a blade element as an integral part of the horn structure, which in combination with a mating anvil effects concurrent or substantially contemporaneous severing of the tubular film into discrete sequential tubular segments and ultrasonic bonding of distal ends thereof to form condom articles.

Alternatively, it may be desirable to sever the tubular blow extruded film to form discrete open-ended tubular main sheath portions, followed by a separate distal end sealing operation.

As discussed hereinabove, the condom articles of the present invention may be formed in various configurations, including tubular cylindrical-type configurations, as well as "baggy"-type configurations, the choice of a specific configuration depending on the particular materials of construction and the intended packaging, storage, and use environments of the condom.

In the tubular cylindrical configuration of the condom illustratively shown in Figures 1 and 2 hereof, a reinforcing ring is provided at the periphery of the opening at the proximal end of the condom. The purpose of such reinforcing ring is to provide a manually grippable region for application

and removal of the condom to the penis for use, as well as to provide a structure facilitating rolling of the condom when the condom is to be provided to the end user in rolled form, and, to the extent that the reinforcement ring is an elastic and resilient element, to assist in the retention of the condom on the penis of a wearer and to prevent the leakage of seminal fluids from the condom during and subsequent to coital activity.

It will be recognized that in lieu of the reinforcement ring illustratively described, there may be provided at the distal end of the condom any of a variety of other attachment, securement, or retention means, including tapes, adhesive-bearing surfaces, strings or straps attached to the distal end of the condom, etc.

While the condom of the present invention may be devoid of any such proximal attachment, securement, and/or retention means, it generally is preferred in practice to utilize a reinforcement ring at the condom proximal end.

Several approaches may be employed to form such a reinforcing ring at the proximal end of the condom. For example, the sheath material at the open proximal end of the condom may be rolled onto itself, and then tacked in place employing, e.g., a thermal weld or an elastomeric adhesive. Alternatively, the sheath material at the open proximal end of the condom may be rolled onto a ring of a different material from that employed to form the sheath portion of the condom, or it may be rolled onto a ring of the same material, followed by securement of the rolled length of condom to the ring structure. Still another approach is to roll the open end of the condom onto a narrow section of a second piece of the tubular film material, of the same material of construction as the main sheath portion of the condom. It will be appreciated that all such rolling

techniques must be carefully controlled during the manufacturing process, to avoid excessive wrinkling of the sheath material at the proximal end, such as otherwise may cause distortion of or undesired reduction in the diametral extent of the proximal opening of the condom.

A still further approach to forming a reinforced proximal opening for the condom article, is simply to fold the open end material back onto the exterior surface of the sheath portion, in the vicinity of the proximal opening. For example, an untacked single fold approximately 0.25 inch wide may be employed.

As discussed hereinabove, condom articles of the present invention are suitably produced by blow forming, i.e., blow molding or blow extrusion forming.

In blow molding, an extruded parison tube of heated thermoplastic is introduced between respective halves of an open split mold, and then expanded against the sides of the closed mold via fluid pressure, typically a volume of interiorly provided air. The mold then is opened and the tubular part ejected. This method is generally economical for and amenable to high volume manufacturing of one piece hollow articles, which may vary considerably in complexity of shape. Blow molding generally requires close attention to and control of processing conditions to obtain highly uniform wall thicknesses in the molded article.

Blow extrusion forming typically involves feeding of a thermoplastic or thermosettable molding compound from a hopper to a screw and barrel, where the molding compound is heated to a plastic state and then urged forwardly, typically by a rotating screw, through a nozzle of a selected cross-sectional configuration. An air bubble is introduced into the interior

of the tubular extruded film, and the pressure of such air bubble is employed to control the diametral and film thickness characteristics of the tubular extrudate.

An illustrative blow molding apparatus which may be usefully employed to produce condom articles of the present invention is a Esta blow-molding machine, HS 361 or HS 451, commercially available from Staehle Maschinenbau GmbH, Leinfelden-Echterdingen, Federal Republic of Germany.

Although it may be desirable in some applications of the present invention to utilize thermosetting materials of construction for the condom article, it generally is preferred to utilize thermoplastic materials, most preferably thermoplastic elastomeric materials, although, as indicated, non-elastomeric polymeric materials such as ultra-low density polyethylene or other non-elastomeric homopolymeric or copolymeric films may be advantageously utilized.

When thermoplastic materials are employed to form the tubular main sheath portion of the condom article, and blow extrusion forming is employed, heat sealing methods of closing the distal end of the tubular article to form the condom of the invention are preferred, although any other suitable closure techniques appropriate to the specific materials of construction employed may advantageously be used. When blow molding is employed as the forming method for the condom, no such distal end closure will typically be necessary, since the mold characteristically will be fabricated to form the condom as a unitary, i.e., single piece, product article, having a distal end integrally enclosing the tubular main sheath portion of the condom.

Depending on the specific materials of construction employed, it may be particularly advantageous in some instances to utilize blow extrusion to form the tubular main sheath portion of the condom, due to the ability of blow extrusion to impart biaxial orientation to the formed tubular film. It will be recognized that the specific blow forming techniques which may be usefully employed for a given application may be widely varied, depending on the materials of construction, type of condom configuration desired, processing rates employed, etc.

The features and advantages of the present invention are more fully shown with respect to the following illustrative examples, which, however, are not to be limitingly construed as regards the nature and practice of the present invention.

EXAMPLE I

Based on initial materials selection criteria including tensile strength, elongation, hardness, and flexural modulus, the materials identified in Table I below were selected for testing as materials of construction for condom articles of the present invention. Set out in Table I are the generic types and commercial tradenames of the materials selected, together with their appertaining physical property values for tensile strength, elongation, 300% modulus, Shore A hardness, specific gravity and melt temperature (where applicable).

TABLE I

Sample	Material	Tensile Strength, psi	Elongation, percent	Modulus 300%, psi	Hardness, Shore A	Specific Gravity	Melt Temp., F
1	Styrene-Butadiene-Styrene Block Copolymer (Kraton D-2104, Shell Chemical Company)	1700	880	200	43	0.93	--
2	Styrene-Ethylene/Butylene-Styrene Block Copolymer (Kraton G-2701, Shell Chemical Company)	1600	800	480	67	0.90	--
3	Styrene-Ethylene/Butylene-Styrene Block Copolymer (Kraton G-2706, Shell Chemical Company)	850	950	130	28	0.90	--
4	Styrene-Ethylene/Butylene-Block Copolymer (KTR-27-G, Shell Chemical Company)	--	--	--	--	--	--
5	Dispersion of Polypropylene in EPDM Rubber (Santoprene 201-64, Monsanto Company)	1000	400	--	64	0.97	380
6	Olefinic Thermoplastic Elastomer (Telcar 81-D-954A, Teknor Apex)	560	740	--	45	1.18	425
7	Polybutylene Terephthalate/ Polyether Glycol Block Copolymer, Polyester Elastomer (Hytrel 3548, E. I. du Pont de Nemours & Company, Inc.)	--	--	--	D35	1.15	370

TABLE I (CONTINUED)

Sample	Material	Tensile Strength, psi	Elongation, percent	Modulus 300%, psi	Hardness, Shore A	Specific Gravity	Melt Temp., F
8	Polyester Block Amide (Pebax 3533-SN-00, Atochem)	--	--	--	D35	1.01	--
9	Polyether Block Amide (Pebax 4011-MA-00, Atochem)	--	--	--	--	--	--
10	Urethane Thermoplastic Elastomer (P3429, J. K. Quinn Co.)	--	--	--	--	--	--
11	Olefinic Thermoplastic Elastomer (ETA-3131E, Republic Chemical Co.)	3000	550	--	D70	0.91	--
12	Olefinic Thermoplastic Elastomer (ETA-4010, Republic Chemical Co.)	1250	500	--	87	0.91	--
13	Olefinic Thermoplastic Elastomer (ETA-5081, Republic Chemical Co.)	3300	650	--	D60	0.90	--
14	Urethane Thermoplastic Elastomer (Texin 480-A, Mobay Corporation)	6000	500	1700	85	1.20	395
15	Urethane Thermoplastic Elastomer (Texin DP7-1014, Mobay Corporation)	6000	675	1000	83	1.12	--

The foregoing materials identified in Table I were evaluated for suitability to blow extrusion processing. Crude tubes formed by blow extrusion of these samples then were qualitatively evaluated with respect to their processability and compatibility with the blow extrusion technique.

The blow extrusion apparatus employed in this evaluation was a laboratory-sized unit manufactured by C. W. Brabender Instruments, Inc., (South Hackensack, New Jersey) including a Model 3003 extruder and a Model BFW-100 take-off tower. The extruder had a 0.75 inch diameter screw and a 30:1 length to diameter ratio, with three heater zones. An add-on extruder die functioned as a fourth heater zone. The take-off tower effected pulling and conveying of the extruded tube in a vertical direction until it was sufficiently cooled. The top of the take-off tower comprised a set of rolls to collapse the contained air bubble and redirect the tube to a final take-up roll. The take-off tower also comprised controls for air pressure for internal tube pressurization, and controls for external tube cooling.

The extruder die employed for extruding thin, small diameter tubes in this initial qualitative evaluation, was a C. W. Brabender 0.5 inch diameter (outer ring diameter) heated die. An inner die, provided with the unit, measured 0.46 inch, thereby providing an annular gap of 0.02 inch, through which the molten polymer flowed and formed the tube. In initial blow extrusion trials, the formed tubular film was thicker than desired. To achieve a thinner product, the inner die was replaced by a die with a diameter of 0.48 inch, providing a gap of 0.01 inch, which produced desirable tube thicknesses, ranging from 0.0015 to 0.005 inch after blowing, depending on the specific material processed.

Results of the initial qualitative assessment of Samples 1-15 are set out in Table II below.

TABLE II

Sample	Processability[a]	Properties of Extruded Tube
1	fair	Soft, good elasticity, poor strength in machine direction,
2	fair	Limited elasticity
3	good	Soft, good elasticity, behaves similar to latex, tends to stick to itself
4	poor	Good elasticity, very thick wall, very difficult to get uniform thin bubble
5	good	Poor strength in both directions, limited elasticity,
6	poor	Moderate strength, limited elasticity
7	excellent	Good strength, limited elasticity tendency to stick to itself
8	good	Tough, reasonable elasticity, good strength, only slight tendency to stick to itself
9	excellent	Tough, much less elasticity than Sample 8 when dry, soaking in water to take advantage of hydrophilic nature of this polymer increased elasticity with little loss in strength
10	poor	Very tough, reasonable elasticity, sticks to itself strongly
11	poor	Very low elasticity, not soft, poor strength
12	fair	Tough, fair-poor strength, limited elasticity, tendency to stick to itself
13	poor	Very low elasticity, not soft, poor strength
14	good	Very tough, good strength, limited elasticity, slight tendency to stick to itself
15	fair	Very tough, limited elasticity,

Based on the results shown in Table II, Samples 3 and 4 (styrene-butadiene-styrene block copolymers), Sample 7 (polybutylene terephthalate/polyether glycol block copolymer), Samples 8 and 9 (polyether block amides), and Sample 14 (polyester-based polyurethane) exhibited the best processability/extruded tube properties of the various materials tested. Among the olefinic thermoplastic elastomeric materials tested, significant processing difficulty was encountered, and the resulting blown tubes exhibited generally insufficient elasticity and limited strength, relative to the other materials evaluated.

In addition to the tabulated materials whose processability and extruded tube properties are described in Table II, an ultra-low density polyethylene material (Sample 16; ATTANE™ 4003 ethylene-octene copolymer, commercially available from The Dow Chemical Company, Midland, Michigan) was evaluated. This polymeric material is not an elastomeric thermoplastic, however it was very easy to process via blow extrusion and produced tube samples in the desired range of diameter and thickness. This ultra-low density polyethylene was not as soft as some of the other materials, such as the styrene-butadiene-styrene block copolymer of Sample 3, and did not recover from high strain extensions, but was relatively extensible.

EXAMPLE II

On the basis of the results obtained in Example I, a further blow extrusion evaluation was carried out for Samples 3, 4, 7, 8, 9, 14, and 16, using refined operating parameters.

In contrast to the initial extrusion evaluation of Example I wherein the inner die had a diameter of 0.46 inch, the further extrusion tests employed an inner die having a diameter of 0.48 inch.

Of the aforementioned seven selected material samples (Samples 3, 4, 7, 8, 9, 14 and 16), Samples 4 and 8 were undesirably difficult to process in low film thicknesses. Specifically, Sample 4 did not stablize in a thin blown bubble, and Sample 8 exhibited an undesirable tendency to self-adhere, even with extended cooling. The remaining five samples, Samples 3, 7, 8, 9, 14 and 16, produced extruded tube diameters and film thicknesses which were much closer to the desired values.

Table III below provides a summary of processing conditions for the blow extrusion processing of these samples, together with the approximate thickness range, in inches, achieved for each of the blow extruded samples.

TABLE III

Sample	Extruder Temperature zone 1	zone 2	zone 3	zone 4	Extruder Speed, RPM	Blow Pressure, Oz/sq. in.	Cooling Pressure, psi	Approximate thickness range, inch
3	300	340	370	380	7	8	11	0.0050-0.0055
7	320	375	380	380	7	1 - 8	15	0.0030-0.0040
8	360	370	380	400	7	12	10	---
9	400	410	430	450	4	2	13	0.0025-0.0035
14	300	330	360	380	6	3	10	0.0015-0.0025
16	400	430	440	450	4	2	10	0.0020-0.0025

EXAMPLE III

In this test, blow extruded tubes produced in Example II were evaluted for heat sealing capability, utilizing heat sealing as a method for forming a closed distal end of the tube for condom usage. Extruded tubes of Samples 3, 7, 9, 14, and 16 were evaluated.

In a preliminary evaluation, a laboratory thermal impulse heat sealer, commercially available from Vertrod, Inc., was employed.

The impulse heat sealer is a potentially attractive means for forming enclosed distal ends on blow extruded tubes for condoms of the present invention, because it can initiate the sealing process at a low temperature, with the material to be sealed quickly rising to the desired elevated sealing temperature, and then returning quickly to ambient conditions. The resulting rapid sealng in a localized region prevents surrounding material in the vicinity of the seal from experiencing undesirable temperature changes such as may deleteriously alter material properties. Such localized heating character is particularly important in thin film sealing applications such as forming enclosed distal ends for blow extruded condoms of the present invention.

In application of the thermal impulse heat sealer to the aforementioned extruded tubes, Samples 14 and 16 were heat sealed effectively at moderate power levels, with the resulting heat seals being strong, effective, soft, and easily trimmed. Samples 3, 7, and 9, by contrast, were unable to be effectively sealed with the impulse heat sealer even at higher power levels and longer dwell times.

In a second phase of the sealing evaluation, a conventional melt heat seal was employed to form a closed end on the extruded tubes. A laboratory thermal heat sealer (Model 18 PR, commercially available from PAC), was modified to form by melt sealing a closed and rounded condom end, i.e., to provide a seal of a semicircular shape (in edge profile) rather than a straight strip. For this purpose, an aluminum heating platen was constructed having a concave hemispherical cavity for sealingly forming rounded ends on the extruded tubes. During heat sealing, the extruded tubes were placed in the hemispherical concave region of the platen and pressed against a hard rubber backup strip to form the seal.

Table IV below sets forth the heat sealing temperatures and dwell times employed for heat sealing each of the identified extruded tube samples.

TABLE IV

Sample	Temperature, F	Dwell Time, seconds
3	190	3
7	260	1
9	340	1
14	260	1
16	340	1

EXAMPLE IV

In this example, samples of the blown extruded films (Samples 3, 7, 9, 14, and 16) were tested to compare the properties of condoms according to the present invention to those of conventional latex rubber condoms.

The tests conducted were determinations of ultimate tensile strength, ultimate elongation, 100% modulus, and puncture resistance.

The ultimate tensile strength and ultimate elongation values were measured at material breaking points. The 100% modulus was the force required to stretch the condom to twice its original length.

The puncture resistance test simulated a fingernail and finger being pushed through a condom, and comprised a lower base unit which clamped and secured the condom film, providing a circular opening of 1 inch diameter within which the clamped film was exposed. A finger simulator probe was pushed through the base unit opening and into the film using an Instron test unit which monitored the probe travel and the force applied to the probe. The probe comprised a 0.5 inch diameter steel rod tapered at its end to a central wedge shape with a thickness of 0.025 inch, and rounded at its extremity to a radius of curvature of 0.25 inch. After the puncture tests were conducted and the load to puncture recorded, the data were normalized based on the thickness of each material sample. This resulted in final puncture data in units of force to puncture per unit thickness (pounds per inch).

From six to eight measurements were taken for each sample in determining the tensile strength, percent elongation, and 100% modulus values; from three to five measurements were taken for each sample to determine puncture resistance. Mean

measurement values were determined in each of the test procedures, for each sample tested, and the results are set out in Table V below.

The data for Samples 3, 7, 9, 14, and 16 are shown together with data for a control film of coventional latex condom material, for comparison purposes.

TABLE V

Sample	Sample Thickness, inches	Tensile Strength, psi	Percent Elongation	100% Modulus, psi	Load to Puncture lbs/inch
3	0.0055	811	1241	83	503
7	0.0048	1386	993	604	587
9	0.0032	434	204	415	207
14	0.0028	5193	863	772	1104
16	0.0021	1793	781	990	1253
Control	0.0030	1656	1163	123	928[a]

(a) 925 minimum level, likely to be higher

The polyester-based polyurethane film (Sample 14) provided the highest tensile strength at 5193 psi. The next highest tensile strength material was the ultra-low density polyethylene film (Sample 16) at 1800 psi and the conventional latex condom film (control) at 1665 psi. The lowest strength material was the polyester block amide material (Sample 9) at 434 psi; this material was tested after soaking it in water for a minimum of 24 hours to reduce its stiffness.

The conventional latex rubber material (control) and the styrene-butadiene-styrene block copolymer (Sample 3) showed comparable elongation characteristics (1163% for the control, and 1241% for Sample 3). The polyester block amide material (Sample 9) had the lowest elongation at 204%, while the remaining three materials exhibited between 800% and 1000% elongation.

The lowest, and most desirable, 100% modulus value was obtained with the styrene-butadiene-styrene block copolymer material (Sample 3) at 83 psi. The control had a 100% modulus value of 123 psi. The remaining materials required much higher stress levels to stretch them to twice their original length. The highest 100% modulus level was obtained for the ultra-low density polyethylene material (Sample 16) at 990 psi, and the polyester-based polyurethane (Sample 14) was also relatively high at 772 psi.

With regard to puncture resistance, the materials tested fell into two general classes. The ultra low density polyethylene (Sample 16), the polyester-based polyurethane (Sample 14) and the latex rubber material (control) required high loads to initiate a puncture. The remaining materials (Samples 3, 7, and 9) [Note: Sample 9 was tested wet in the puncture test], exhibited punctures at loads which were approximately one-half of the loads necessary to initiate puncture in the first-mentioned class of materials.

While the invention has been described with reference to particular examples and embodiments, it will be apparent that numerous variations, alternatives, and modifications are possible, and accordingly all such variations, alternatives, and modifications are to be regarded as being within the spirit and scope of the present invention.

THE CLAIMS

What Is Claimed Is:

1. A condom comprising a blow formed tubular main sheath portion, closed at a distal end thereof and open at a proximal end thereof.

2. A condom according to Claim 1, wherein the tubular main sheath portion is formed of a material selected from the group consisting of thermoplastic elastomeric materials and polymeric non-elastomeric materials.

3. A condom according to Claim 1, wherein the tubular main sheath portion is formed of a thermoplastic elastomeric material.

4. A condom according to Claim 3, wherein said thermoplastic elastomeric material is selected from the group consisting of: polyurethanes; polyether block amides; styrene-rubber-styrene block copolymers; and polyesters.

5. A condom according to Claim 1, wherein the tubular main sheath portion is formed of a block copolymer selected from the group consisting of: styrene-butadiene-styrene block copolymers; styrene-isoprene-styrene block copolymers; and styrene-ethylene/butylene-styrene block copolymers.

6. A condom according to Claim 1, wherein the tubular main sheath portion is formed of an ethylene-octene copolymer.

7. A condom according to Claim 1, wherein the tubular main sheath portion is formed of a polyester-based polyurethane.

8. A condom according to Claim 1, wherein the tubular main sheath portion is formed of a styrene-rubber-styrene block copolymer.

9. A condom according to Claim 1, wherein the tubular main sheath portion is formed of a polyester-based polyurethane material having a specific gravity of from about 1.15 to about 1.25, a Shore A hardness of from about 80 to about 95, a break tensile stress of from about 4,500 to about 6,000 psi, a tensile stress at 50% elongation of from about 720 to about 2,400 psi, an ultimate elongation of from about 450% to about 600%, a flexural modulus of from about 4,000 to about 37,000 psi, and a tear strength of from about 500 to about 1,000 pli.

10. A condom according to Claim 1, wherein the tubular main sheath portion is formed of a multiblock rubber-based copolymer having a Shore A hardness of from about 25 to about 100, a tensile strength of from about 500 to about 4,500, a 300% modulus of from about 120 to about 1,000 psi, and an ultimate elongation of from about 200% to about 1,400%.

11. A condom according to Claim 1, wherein the closed distal end is heat sealed.

12. A condom according to Claim 1, wherein the tubular main sheath portion is formed by blow extrusion.

13. A condom according to Claim 1, wherein the tubular main sheath portion is formed by blow molding.

14. A condom according to Claim 1, wherein the open proximal end is bounded by a reinforcement ring joined to the tubular main sheath portion.

15. A method of making a condom, comprising the steps of:

(a) blow forming a tubular film of a thermoplastic material; and

(b) sealing one end of said tubular film.

16. A method according to Claim 15, wherein said blow forming comprises blow extrusion.

17. A method according to Claim 15, wherein said blow forming comprises extrusion molding.

18. A method according to Claim 15, wherein said sealing comprises heat sealing.

19. A method according to Claim 15, wherein said thermoplastic material is selected from the group consisting of thermoplastic elastomeric materials and polymeric non-elastomeric materials.

20. A method according to Claim 15, wherein said thermoplastic material is selected from the group consisting of: polyurethanes; polyether block amides; styrene-rubber-styrene block copolymers; and polyesters.

21. A method according to Claim 15, wherein said thermoplastic material is a polyester-based polyurethane.

22. A method according to Claim 15, wherein said thermoplastic material is a styrene-rubber-styrene block copolymer.

ABSTRACT OF THE DISCLOSURE

A condom comprising a blow formed tubular main sheath portion is disclosed, and a method for making same. Blow extrusion and blow molding techniques of fabrication are described, together with the use of various thermoplastic materials of construction, including polyurethanes, polyether block amides, styrene-rubber-styrene block copolymers, ethylene-octene copolymers, and polyesters.

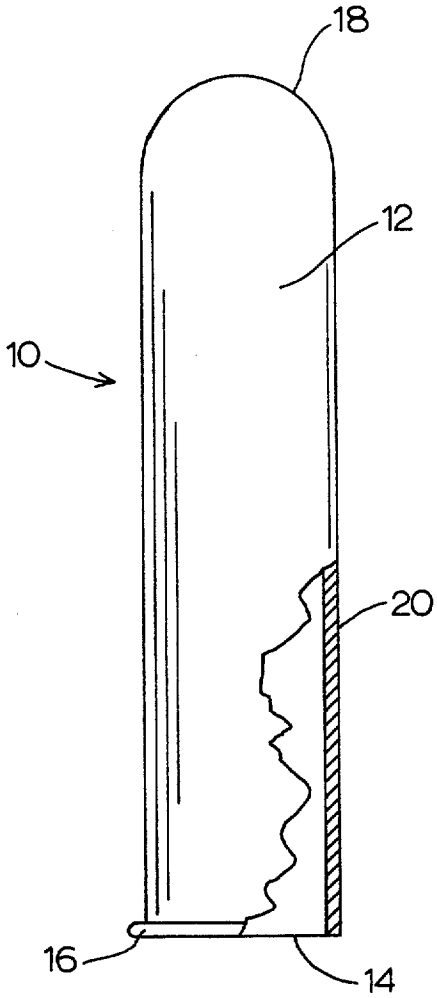

FIG. 1

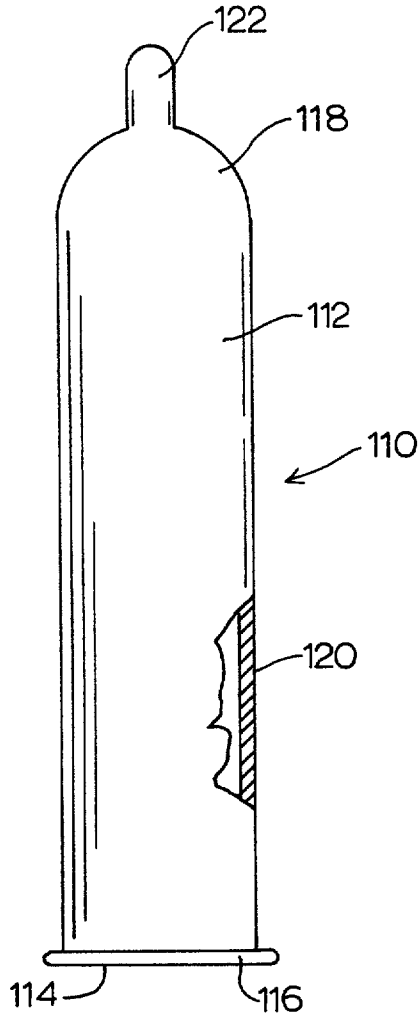

FIG. 2

FAHI 5006P

APPLICATION FOR LETTERS PATENT

OF

ROBERT G. WHEELER

AND

ROBIN G. FOLDESY

FOR

"CONDOM ARTICLES, AND APPARATUS AND

METHOD FOR MAKING AND USING THE SAME"

46

BACKGROUND OF THE INVENTION

Field of the Invention

The present invention generally relates to condom articles and to method and apparatus for making and using the same.

Description of the Art

In recent years, there has been a significant increase in the incidence and spread of sexually transmitted diseases, and this phenomenon has in turn caused an increased use of condoms as a prophylatic measure to reduce the risk of infection and transmission of such diseases.

Among the reasons for the increase in incidence and rate of transmission of sexually transmitted diseases (STD's) are the development of increasingly antibiotic-resistant strains of disease-causing organisms, e.g., those responsible for diseases such as syphillis and gonorrhea. Another factor has been the absence of any effective cure for acquired immunodeficiency syndrome (AIDS).

Recent disclosures by the Centers for Disease Control (Washington and Atlanta), and reports at the Third International AIDS Conference in Washington, D.C. in June, 1987, have focused international attention on the proliferation of acquired immunedeficiency syndrome (AIDS) in the general population, beyond the originally defined high-risk classification groups of homosexuals, bisexuals, intravenous drug users, and Haitain/African groups.

The diseases with which AIDS has been or is suspected to be linked include Pneumocystis carinii pneumonia, Kaposi's

sarcoma, esophageal or bronchopulmonary candidiasis, extra-pulmonary cryptococcosis, cytomegalovirus internal organ infection, disseminated Mycobacterium avium complex or M. kansasii infection, chronic herpes simplex ulceration, chronic cryptosporidiosis enteritis, toxoplasmosis of the brain, high-grade B-cell non-Hodgkin's lymphoma, disseminated histoplasmosis, chronic isosporiasis enteritis, and lymphoid interstitial pneumonia in children.

In a recent San Franciso cohort study reported in "AIDS: The Cost in Health and Lives," Selik, M. D. Richard M., et al, The Internist, April, 1987, p.p. 6 et seq., there was found to be, for every case of AIDS in the group studied, nine cases of other HIV-related morbidity. As also indicated in this article, cohort follow-up studies indicate that the proportion of HIV-infected persons who will ultimately develop AIDS ranges from 25% to 50% or more depending on the length of follow-up and the patient's clinical status at the beginning of the study. Mathematical modeling of this trend in reported AIDS cases has led to a projection that the cummulative total of AIDS cases will be 270,000 by 1991, and the number reported that year alone will be 74,000.

Against the foregoing background, and the recognition that condoms afford a safe, low cost, and generally reliable means for combating the spread of STD's, including AIDS, there has been an increased demand for condoms.

Currently, most condoms are produced from a latex resin via a dipping process in which a cylindrical and rounded-end mold is dipped into a resin bath, so that the mold is coated with a thin layer of the latex material. The thickness of the

latex coating on the mold is dependent on the viscosity of the latex, and the speed of extracting the mold from the latex bath. Similar latex dipping processes have been employed with suitably shaped molds to form tight-fitting gloves such as surgical gloves.

The above-described latex resin dipping process has been utilized for decades, and yields a generally satisfactory barrier product at reasonable cost.

With the recent spread of AIDS in the general population and the resurgence of condom usage in sexual activities, there has been interest in improving the strength and reliability characteristics of condoms, and of achieving improvements in manufacturing processes and economics, to further combat the spread of STD's generally, and AIDS specifically, as well as to provide a safe and reliable contraceptive means.

U.S. Patent 4,576,156 issued March 18, 1986 to Manfred F. Dyke discloses a condom formed of a thermoplastic polyurethane material, having a generally cylindrical configuration with an open proximal end and a closed distal end. The disclosed condom has a thickness of from about 0.01 millimeters, or less, to about 0.25 millimeters. The thermoplastic polyurethane employed to form the condom is disclosed as having: an average Shore A hardness of from about 50 to about 90; a tensile stress, at 100% of elongation, between about 300 and 1,000 psi; and a tensile stress, at 300% elongation, between about 800 and 3,000 psi. Suitable thermoplastic polyurethane species for manufacturing the condom include those set out at column 2, line 55 to column 3, line 10 of the Dyke patent, with polyether- or polyester- based urethane elastomers said

to be preferred. In the manufacture of the thermoplastic polyurethane condom disclosed in the Dyke patent, a film of the polyurethane material, e.g., in the form of a 6-inch square, is heated to a temperature high enough to soften the polymer but low enough to avoid chemical degradation, preferably in a clamping frame, and at a temperature of about 400-500°F. The heated film then is brought into contact with a preformed mandril to cause the film to assume the shape of the mandril, preferably with application of a vacuum to the system in order to bring about uniformity in wall thickness (column 3, lines 47-50 of the patent).

European patent application 0 147 072 published July 3, 1985 in the names of Robert A. Taller, et al, discloses a process for making a polyurethane condom with a uniform thickness of from about 1.5 to about 4 mils. A heat cured polyurethane prepolymer solvent solution is employed into which a mold is dipped and withdrawn for heat curing on the mold. The polyurethane prepolymer which is employed in the dipping medium is a prepolymer which is the reaction product of a polyisocyanate with at least one long chain polyol. The polyol is amorphous at room temperature, has an average molecular weight of from about 500 to about 5,000, a hydroxy number of from 225 to about 22.4, and a NCO/OH ratio of from about 0.95:1 to about 1.1:1.

U.S. Patent 4,009,717 to C. H. Allen discloses a condom comprising inner and outer sheaths, with the inner-sheath volume providing a fluid reservoir so that the interior of the inner sheath remains dry. The outer sheath is closed at one

end and open at the other. The inner sheath is open at both ends inside the outer sheath, with means between the inner and outer sheath establishing a fluid-tight seal to form a fluid reservoir therebetween.

U.S. Patent 4,232,675 to E. N. Meldahl discloses a modified condom of shorter length than conventionally employed, interiorly containing a spermicidal ring and a penis-supported harness assembly.

Various condom designs have been evolved which feature a double-walled chamber at the distal end of the condom containing contraceptive or medicant material. Examples include U.S. Patent 4,332,243 to M. Gutnick; U.S. Patent 2,410,460 to J. P. Robinson; U.S. Patent 4,446,860 to M. Gutnick; and U.S. Patent 2,577,345 to F. L. McEwen.

West German Offenlegungsschrift 2020280 discloses a condom comprising two sheaths inserted in each other, the inner sheath having an opening through which semen can discharge and which is fastened in place by two rubber rings.

U.S. Patent 2,433,538 to H. W. Warner discloses a sperm receptacle article comprising a receptacle member having a removable container therein. The container comprises a distal receiver opening and contains absorbent material for receiving and absorbing the sperm specimen. This patent states, at column 3, lines 3-9, that sperm passes directly from the wearer through the receiver opening into the absorbent material in the removable container. It is apparent from this description that the receptacle member is placed on the male organ and the distal end of the penis is in the vicinity of the proximal wall of the sperm container, but that the penis is not inserted through the sperm container opening.

51

U.S. Patent 2,586,674 to F. Lonne describes a prophylactic construction (see Figure 3 of the patent, and appertaining description at column 2, lines 26-36) wherein a double-layer condom comprises an inner pellicle having annular projections or extensions transverse to the longitudinal dimension of the prophylactic.

U.S. Design Patent 253,009 to T. Okamoto shows a prophylactic device whose frontal (distal) section comprises a pair of indented surface portions forming circumferential grooves in the prophylactic, transverse to the longitudinal axis thereof.

U.S. Patent 3,295,145 to R. E. Erickson describes a urine collector for infants, comprising front and rear panels peripherally sealed to one another. The panels are also sealed to one another by inclined seams, extending from the outer periphery downwardly and inwardly for part of the distance to the center line of the collector, to form a throat dividing the collector into upper and lower compartments. The back panel of the collector features an oval aperture having its major axis aligned with the longitudinal axis of the collector, to accommodate the external genitals of a small child. Surrounding the aperture is a pressure sensitive adhesive for adhering the collector to the infant's skin. The patent teaches, at column 2, lines 62-65, that the collector panels preferably are formed of a substantially transparent thermoplastic film such as polyethylene, vinyl copolymers and the like, preferably from about 0.5 to 3 mils in thickness.

U.S. Patent 4,022,213 to D. Stein discloses a male drip urinal comprising a tubular sleeve provided with a thin rubber

sheath adapted to be stretched over the penis for sealing purposes, with an apertured resilient sheet provided across the mouth of the urinal sleeve for sealing about the base of the penis. The purpose of this sheet, which extends radially from the mouth of the urinal, is to provide a backup seal should the inner sheath tear. The sheet is carried by an annular ring forming the mouth of the urinal sleeve. The patent states at column 2, lines 8-16 that the sheet or diaphragm is in the form of a rubber disk of approximately 1/8 inch thickness having a central hole of approximately 7/8 inch diameter for sealably engaging the base of the penis, to prevent backup of urine through the mouth of the sleeve and onto the wearer's clothing.

U.S. Patent 2,448,938 to A. Wayne describes a sanitary protective appliance which may, as shown in Figures 5 and 6 of the patent, be configured with a shield-like body portion which is of slightly convex shape in side elevation view, with an accordian-like finger portion which is foldable back against the convex face of the body portion. The finger portion is convergingly shaped from its proximal to its distal end portions. The body portion of this device contains a generally central opening forming a passage into the finger portion and comprises an integral tab to facilitate removal of the appliance after use. The rear (proximal) face of the body portion is peripherally coated with an adhesive coating material, except for the tab. The adhesive coating is overlayed with a gauze cover which is removable to affix the appliance, for covering or protecting a body appendage. The patent discloses that the accordian finger and body portion may be round or oval in cross-section, depending on the shape

of the appendage on which it is to be used. The patent states, at column 3, lines 8-15, that the appliance comprising the body portion and finger-like portion "provide a protective cover for a suitable body appendage with the finger like portion providing an additional receptacle or secondary tip capable of holding puss or other extraneous matter away from the body."

U.S. Patent 4,735,621 to L. Hessel discloses a tubular protective condom-like device comprising a flexible, thin-walled tube that is closed at one end and has at an opposite open end a collar-shaped, outwardly extending portion with means for radially stretching the collar or open end. In one disclosed embodiment, the device has a first outwardly extending ring-shaped means adapted for radially extending the open end, and a second outwardly extending ring-shaped means that is adapted for radially extending the closed end. The second ring-shape means thus secures or maintains the device in the vagina in a manner similar to a diaphram. The inner diameter of the device is sufficiently large to permit movement of a penis during coital contact.

It is an object of the present invention to provide improved condom articles which are readily, simply, and inexpensively formed.

It is another object of the invention to provide apparatus and methods for making and using condoms of such types.

Other objects and advantages of the present invention will be more fully apparent from the ensuing disclosure and appended claims.

SUMMARY OF THE INVENTION

In one aspect, the present invention relates to a condom article comprising a generally tubular main sheath portion formed of a flexible elastic material, closed at a distal end thereof and open at a proximal end thereof, with an annular-shape sealing element formed of a flexible elastic material circumscribing an interior opening of smaller size than the proximal end opening, the sealing element being joined at its outer periphery to the main sheath portion at or in the vicinity of the proximal end opening.

The main sheath portion and/or sealing element may be formed of a thermoplastic elastic material, and the condom may comprise diametrally opposed heat seals extending longitudinally along the main sheath portion and converging at the distal end of the main sheath portion, with the sealing element being joined to the main sheath portion at the proximal part thereof by such heat seals. Preferably, such condom, when reposed in a flat configuration with the heat seals perimetrally aligned, has the interior opening circumscribed by the sealing element and defining a substantially semi-circular cut-out in the sealing element.

In another aspect, the present invention relates to a condom comprising a generally tubular main sheath portion formed of a thermoplastic elastic material, closed at a distal end thereof and open at a proximal end thereof, the condom having a proximal segment characterized by a reentrant fold having a central opening therein of smaller size than the proximal end opening, the reentrant fold being marginally sealed to the main sheath portion at diametrally opposed side margins of the main sheath portion.

In another aspect, the present invention relates to a condom and applicator assembly, comprising an applicator ring, and a condom comprising a generally tubular main sheath portion formed of a flexible elastic material, closed at a distal end thereof and opened at a proximal end thereof, and comprising a means for compressively retaining the main sheath portion of the penis of a wearer. The compressive retention means is provided at a position which is distally spaced from the proximal open end of the main sheath portion. The section of the main sheath portion proximal to the compressive retention means is circumferentially stretched over the applicator ring such that the compressive retention means is not stretched. In an alternative embodiment, the ring-shaped applicator has a series of circumferentially spaced-apart, longitudinally extending prong elements thereon, and the condom applicator assembly comprises the pronged ring having the proximal open end of the condom stretched onto less than all of the prongs, so that upon usage, the proximal open end can be stretched over the remaining prongs to facilitate penis insertion into the condom.

Another aspect of the present invention relates to condom articles having elastic garter elements at the proximal portions thereof. In one embodiment, the condom comprises a constituent garter at the proximal end thereof retained in position by a heat seal. Such condom article is formed in a method aspect by stretching an elastic ring radially outwardly and, while the ring is in stretched condition, lappingly folding a thermoplastic sheet over the ring, followed by peripherally heat sealing the respective lapped sheet sections to one another along the longitudinally and distal edges thereof, and finally everting the heat-sealed article.

In a related aspect, a collar of thermoplastic elastic film is stretched over a heat sealing element and inserted between adjacent sheets. The adjacent sheets are then heat sealed along the longitudinal and distal edges thereof, and the heat sealing element bonds the stretched collar to the interior of the unsealed open end, thereby forming an integral heat-sealed garter for the resulting condom article.

In a related aspect, the present invention relates to a heat-formed condom with a gartered open end, and to a method for making same, wherein a small diameter condom blank of thermoformable material is placed in a larger diameter cavity and inflated therein. The open end area of the condom is subsequently unheated, while the remainder of the condom is heated to thermally relax it to the dimensions of the cavity. The unheated open end, retaining its smaller diameter, provides a garter for the condom.

And yet another aspect, the present invention relates to a heat-sealed condom with proximal end flanges, the condom being formed with a reentrant fold at its proximal end, as previously described, with the heat seals along the longitudinal edges of the condom extending only part way to the proximal end thereof, whereby flaps of the film are provided at the condom proximal opening, to aid in applying the condom to the penis.

In another aspect, the present invention relates to a condom comprising a generally tubular main sheath portion formed of a flexible elastic material, closed at a distal end thereof and open at a proximal end thereof, with an annularly shaped sealing element formed of a flexible elastic material circumscribing an interior opening of smaller size than the proximal end opening. The sealing element extends radially

outwardly to a greater diametral extent than the diameter of the main sheath portion, and the sealing element is joined to the proximal open end of the main sheath portion, to provide a peripheral annular segment of the sealing element. Such peripheral portion comprises a circumferentially extending peripheral cavity having disposed therein a rigidifying element such as a fluid, foam, or solid material, whereby the rigidified peripheral portion of the sealing element provides a manually grippable extended area, to aid in application of the condom to the penis of the wearer.

The invention in a still further aspect relates to a condom article having an annular-shaped sealing element formed of elastic material circumscribing an interior opening of smaller size than the proximal end opening of the condom, and joined at its outer periphery to the main sheath portion of the condom at or in the vicinity of the proximal end opening, wherein the interior opening is circumscribed by a weakened material portion accommodating enlargement of the opening incident to application to a correspondingly sized penis of a wearer.

In another aspect, the present invention relates to a varible length condom, comprising a generally tubular main sheath portion formed of a flexible elastic material, closed at a distal end thereof and open at a proximal end thereof, wherein an intermediate length portion of the tubular main sheath is longitudinally and reentrantly lapped, and tack welded or otherwise weakly bonded, so that the length of the condom may be increased by tensional translation of the proximal portion of the condom relative to the distal portion thereof.

In another aspect, the present invention relates to a condom comprising a generally tubular main sheath portion, closed at a distal end thereof and open at a proximal end

thereof, with at least one unrolling strip extending longitudinally of the main sheath portion, attached to the main sheath portion in the vicinity of the proximal end thereof, and extending distally forwardly of the distal end of the main sheath portion.

A further aspect of the invention relates to a condom comprising a generally tubular main sheath, closed at a distal end thereof and open at a proximal end thereof, wherein a proximal outer surface region of the tubular main sheath is circumferentially adherently self-lappable. By "circumferentially adherently self-lappable" is meant that the condom subsequent to installation on a wearer's penis may be circumferentially gathered or otherwise lapped to reduce its circumferential extent on the penis, with the gathered or lapped portion being adherently secured in place. In this manner, a condom of "baggy" or otherwise loose, easily applied configuration may be employed, and subsequent to application to the body of a wearer may be circumferentially "taken up" at its proximal portion to provide an adherently secured configuration for coital activity. For example, the material of construction of the tubular main sheath of the condom may be intrinsically self-adherent in character, so that mere circumferential lapping of a gathered proximal region will cause clinging of the lapped segment of the condom to the outer surface region on which the lapped material is reposed. Alternatively, the tubular main sheath of the condom may have on an outer surface at the proximal end thereof an adhesive coating, whereby circumferential lapping of the proximal end region of the condom causes the circumferentially lapped segment thereof to be adhesively bound to the adjacent outer surface area on which the lapped segment is reposed.

The present invention in another aspect relates to a method of making a condom, comprising the steps of:

(a) providing a sheet of a thermoplastic elastic film;

(b) laterally folding the sheet along a lateral fold line to provide lapped main panel portions of the folded sheet;

(c) forming an opening in the laterally folded sheet at an intermediate part of the lateral fold line;

(d) longitudinally inserting a portion of the sheet comprising the fold line reentrantly into the folded sheet to position the fold line between the folded sheet main panel portions and at a leading edge of the inserted reentrant portion; and

(e) heat sealing the folded sheet along lateral peripheral margins thereof, from the inserted reentrant portion forwardly to a distal portion of the folded sheet, to sealingly enclose an interior volume of the folded sheet, with the reentrant portion heat sealed at lateral peripheral margins thereof to the lateral peripheral margins of the main panel portions of the folded sheet.

Other aspects and features of the invention will be more fully apparent from the ensuing disclosure and appended claims.

BRIEF DESCRIPTION OF THE DRAWINGS

Figure 1 is a perspective view of a condom article according to one embodiment of the present invention, featuring an annular-shaped sealing element, joined at its

outer periphery to the interior walls of the main sheath portion of the condom, in the vicinity of but axially spaced from the end opening of the main sheath portion.

Figure 2 is a sectional elevation view of the proximal portion of the Figure 1 condom.

Figure 3 is a perspective view of a condom article according to another embodiment of the invention, featuring an annular sealing element at the proximal opening of the main sheath portion of the condom.

Figure 4 is a sectional elevation view of the proximal portion of the Figure 3 condom.

Figure 5 is a perspective view of a condom similar to that shown in Figure 1, but with the further addition of an annular sealing element in the distal portion of the condom.

Figure 6 is a sectional elevation view of the Figure 5 condom.

Figure 7 is a perspective view of a condom according to another embodiment of the present invention, similar to that shown in Figure 3, but with the provision of an additional annular sealing element in the distal portion of the condom.

Figure 8 is a sectional elevation view of the Figure 7 condom.

Figure 9 is a perspective view of a condom according to another embodiment of the invention.

Figure 10 is a perspective view of a condom according to a further embodiment of the invention.

Figure 11 is a perspective view of a condom according to a still further embodiment of the invention.

Figure 12 is a perspective view of a condom according to to another embodiment of the present invention.

Figure 12A is a perspective view of a proximal end section of the Figure 12 condom, in a circumferentially lapped adherent configuration.

Figure 13 is a top plan view of a folded sheet and stretched garter assembly, for forming a condom according to one embodiment of the present invention.

Figure 14 is a side elevation view of a section of the Figure 13 folded sheet/stretched garter assembly, taken along line 14-14 thereof.

Figure 15 is a plan view of a condom according to the present invention, formed from the folded sheet/stretched garter assembly of Figure 13.

Figure 16 is a top plan view of a condom according to a further embodiment of the invention.

Figure 17 is a side elevation view of a section of the Figure 16 condom, taken along line 17-17 thereof.

Figure 18 is a front elevation view of a rolled condom according to another embodiment of the invention.

Figure 19 is a side elevation view of a section of the Figure 18 rolled condom, taken along line 19-19 thereof.

Figure 20 is a side view, in partial cross-section, of a condom according to another embodiment of the invention.

Figure 21 is a front elevation view of a condom and applicator assembly according to one embodiment of the present invention.

Figure 22 is a side elevation view of the Figure 21 condom and applicator assembly.

Figure 23 is a top plan view of another applicator ring for manually applying a condom to the penis of a wearer.

Figure 24 is a side elevation view of the applicator ring of Figure 23.

Figure 25 is a top plan view of a folded sheet, for making a condom according to another embodiment of the invention.

Figure 26 is an edge elevation view of the folded sheet of Figure 25, taken along line 26-26 thereof.

Figure 27 is a perspective view of a condom formed from the folded sheet shown in Figures 25 and 26.

Figure 28 is a perspective, partially broken away view of an apparatus for forming a heat-sealed condom according to the present invention.

Figure 29 is a condom rolling device for forming rolled condoms.

Figure 30 is a partially sectioned, partially broken away view of an apparatus for thermoforming condoms.

Figure 31 is a top plan view of the Figure 30 apparatus.

Figure 32 is a side elevation view of a condom according to another embodiment of the invention.

Figure 33 is a sectional elevation view of the medial portion of the Figure 32 condom.

Figure 34 is a top plan view of a thermoformer apparatus for forming condoms.

Figure 35 is a side elevation view of a section of the Figure 34 thermoformer apparatus, taken along line 35-35 thereof.

DETAILED DESCRIPTION OF THE INVENTION, AND PREFERRED EMBODIMENTS THEREOF

The condom article of the present invention is of a general type having a tubular main sheath portion, closed at a distal end and open at a proximal end thereof.

The condom of the present invention may suitably be formed by heat-sealing or otherwise joining sheets of flexible elastic material to one another to define the main sheath portion of the condom. In a preferred aspect, the condom may be formed by superposing corresponding sheets of a thermoplastic elastic material, and heat-sealing and severing same to form the condom article having a tubular main sheath portion with a closed distal end and a proximal open end. Thus, the condom so formed will have perimetral edges which are heat-sealed in the desired configuration, e.g., with a surface profile defining an elongated U-shape.

Condoms according to the present invention also may be formed by blow forming the tubular main sheath portion of the condom from a suitable thermoplastic material. As used herein, the term "blow forming" is intended to be broadly construed to include (1) blow extrusion forming, in which a tubular film of a thermoplastic material is extruded and a pressurized fluid introduced in its interior, typically an air "bubble," whose pressure and flow rate determines the dimensional characteristics of the blown tubular film, and (2) blow molding, in which a tube of heated thermoplastic material is passed into an enclosing mold where a pressurized gas inside the tubular film expands the film into contact with the interior surfaces of the mold. The diameter of the tubular main sheath portion should of course be of a size commensurate with its intended use as a barrier means overfitting a male penis.

The condom articles of the invention may be of generally cylindrical shape. Alternatively, it may be suitable in some instances to utilize the condom of the present invention in the form of a baggy-type penile enclosure which is wrapped about the penis for use, and retained in relatively looser configuration on the penis than are the condom articles of generally cylindrical shape, which closely overfit the penis, and are rolled or pulled onto the penis for use.

Thus, the specific structure of the condom article of the present invention may be widely varied, depending on the mode of application intended, and the specific materials of construction employed.

The materials useful for forming the condom articles of the invention may variously include thermoplastic materials such as elastomeric thermoplastic materials, as well as non-elastomeric materials such as olefinic homopolymers and copolymers, e.g., ultra-low density polyethylene.

65

As used herein, the term "elastomeric" in reference to thermoplastic materials useful for forming condom articles in accordance with the present invention, means a material which subsequent to elongation thereof under an applied tensional force, regains at least a significant portion of its original dimensional characteristics when the applied tensional force is released.

Illustrative of thermoplastic elastomeric materials which may find utility in the broad practice of the present invention are: polyurethane materials, as for example the polyester-based polyurethane material commercially available from Mobay Corporation (Plastics and Rubber Division, Pittsburgh, Pennsylvania) under the trademark Texin®, and the thermoplastic polyurethane elastomers which are commercially available from BASF Corporation (Parsippany, New Jersey) under the trademark Elastollan®; polyester elastomers, such as the block copolymers of polybutylene terephthalate and long-chain polyether glycols, which are available commercially from E. I. Du Pont de Nemours and Company, Inc. (Polymer Products Department, Engineering Polymers Division, Wilmington, Delaware) under the trademark HYTREL®; polyether blockamides, such as those commercially available from Atochem, Inc. (Glennrock, New Jersey) under the trademark Pebax®; multiblock rubber-based copolymers, particuarly those in which the rubber block component is based on butadiene, isoprene, or ethylene/ butylene, such as the multiblock rubber-based copolymers commercially available from Shell Chemical Company (Houston, Texas) under the trademark Kraton®; ethylene-octene copolymers such as those commercially avaiable from The Dow Chemical Company (Midland, Michigan) under the trademark ATTANE™; as well as any other suitable homopolymers and copolymers, and mixtures, alloys, and composites thereof.

Among the foregoing materials, polyether- and polyester-based polyurethanes, and multiblock rubber-based copolymers are most particularly preferred. The most preferred thermoplastic materials for forming condom articles in accordance with the present invention are the aforementioned thermoplastic polyurethane elastomers commercially available under the trademark Elastollan®.

The composition of multiblock rubber-based copolymers employed as materials of construction for the condom articles of the present invention may be varied widely, it being understood that the non-rubber repeating units of the copolymer may be derived from any suitable monomer(s), as for example, (meth)acrylate esters, such as methyl methacrylate, cyclohexylmethacrylate, etc.; vinyl arylenes, such as styrene; etc.

In general, the non-rubber blocks in the multiblock rubber-based copolymer preferably are derived from monomer(s) which are non-elastomeric in character, so that "soft" rubber blocks and "hard" non-elastomeric blocks are provided in the multblock copolymer. Such hard blocks may suitably be derived from monomers having a glass transition temperature (T_g) of at least about 50°C, with styrene being generally preferred. The rubber block of such multiblock copolymers may be formed of repeating units derived from synthetic rubbers such as butadiene, isoprene, ethylene/butylene, etc., with butadiene and ethylene/butylene elastomeric blocks generally being preferred.

The most preferred multiblock rubber-based copolymers are those having an A-B-A structure comprising polystyrene endblocks and an elastomeric midblock.

Illustrative multiblock butadiene-based copolymers which may be usefully employed in the broad practice of the present invention include those variously described in U.S. Patent Nos. 3,297,793; 3,595,942; 3,402,159; 3,842,029; and 3,694,523, the disclosures of which hereby are incorporated by reference herein. Various multiblock butadiene-styrene copolymers may be usefully employed to form the condom of the present invention, such as the aforementioned triblock ethylene-butadiene-styrene copolymers commercially available under the trademark Kraton™ from Shell Chemical Company (Houston, Texas) and small block butadiene-styrene copolymers commercialized by Firestone Synthetic Rubber & Latex Company (Akron, Ohio) under the trademark Stereon®.

In the general use of a multiblock rubber-based copolymer as the material of construction for the condom article of the present invention, the copolymer material preferably is characterized by the following physical properties: a Shore A hardness of from about 25 to about 100; a tensile strength of from about 500 to about 4500; a 300% modulus of from about 120 to about 1,000 psi; and an ultimate elongation of from about 200 to about 1400%.

With reference to the use of polyurethanes as materials of construction for the condom of the present invention, preferred material characteristics include: a specific gravity of from about 1.00 to about 1.25, a Shore A hardness from about 80 to about 100, a break tensile stress from about 4500 to about 6,000 psi; a tensile stress at 50% elongation of from about 400 to about 2400 psi, an ultimate elongation of from about 350% to about 600%, a flexural modulus of from about 4,000 to about 37,000 psi, and a tear strength of from about 500 to about 1,000 pli.

It will be recognized that processing conditions and apparatus may be varied widely in blow forming the tubular main sheath portions of condoms in accordance with the present invention, depending on the specific thermoplastic material employed in the blow forming operation, the volumetric space requirements of the process system, the method and apparatus employed for closure of the distal end of the tubular main sheath portion to form the finished condom structure, etc. The choice of specific processing conditions, materials, and the like may readily be determined for a given product application without undue experimentation, by those skilled in the art.

In blow extrusion forming of the main sheath portion of the condom, by way of example, the temperatures over a three-zone extruder may illustratively range from about 300° to about 380° Fahrenheit for a polyester-based polyurethane material or a multiblock butadiene-based styrene copolymer, while the temperature range in the same extruder for an ultra low density ethylene-octene copolymer or a polyether block amide may range from about 400° to about 450°F; associated therewith are blow pressures which may range from 1 to 12 ounces per square inch of blown film, depending on the specific material employed.

When blow extrusion is utilized as the method for blow forming the tubular main sheath portion of the condom, the resulting tubular article has two open ends, and one of such open ends is sealingly closed to form the final condom article. The end closure operation may be carried out in any suitable manner, as for example by heat sealing, and preferably is automated so as to accommodate high speed manufacture of the condom article in high volume. Thus, the tubular body formed by blow extrusion may concurrently be sealed and severed at regular intervals along its length, to accommodate continuous processing.

The closure of the blow extruded tubular main sheath portion preferably is carried out by heat sealing, as is advantageous from the standpoint of thermoplastic materials being employed to form the condom.

The specific method of closure will depend largely on the specific material of construction employed for the tubular sheath portion of the condom, as well as its thickness. The wall thickness of the condom article may vary widely, but preferably is on the order of from about 0.05 to about 0.25 millimeter.

With such low thicknesses, it is important that the sealing method not produce differential stresses or other material deficiencies in the tubular main sheath in the vicinity of the distal end seal. Accordingly, when heat sealing is employed as a closure technique for forming the enclosed distal end of the condom, thermal impulse heat sealing is highly preferred, since it can initiate the sealing process at low temperature, with the material to be sealed thereafter quickly rising to the desired high sealing temperature, and then quickly returning to ambient temperature. Thus, rapid sealing of a localized region is effected, in a manner which prevents nearby regions of the film being sealed from experiencing substantial temperature changes, such as might otherwise result in undesirable change of material properties in the vicinity of the seal. This consideration is particularly important in thinner films, e.g., with material thicknesses on the order of 0.05 millimeter, or lower, up to approximately 0.1 millimeter.

Thus, in a continuous process blow extrusion system, wherein the blown film tube is continuously formed into discrete condom articles, the sealing method may be combined

with, or otherwise effect, severing of the film into discrete tubular segments for the desired product articles. For example, it may be possible to utilize an ultrasonic sealing assembly comprising an ultrasonic horn having associated therewith a blade element as an integral part of the horn structure, which in combination with a mating anvil effects concurrent or substantially contemporaneous severing of the tubular film into discrete sequential tubular segments and ultrasonic bonding of distal ends thereof to form condom articles.

Alternatively, it may be desirable to sever the tubular blow extruded film to form discrete open-ended tubular main sheath portions, followed by a separate distal end sealing operation.

It may also be desirable in the broad practice of the present invention, as indicated, to form the condom article from flat film stock or sheet material, which is folded and heat sealed, or otherwise formed into the condom article, or the main sheath portion thereof.

As discussed hereinabove, the condom articles of the present invention may be formed in various configurations, including tubular cylindrical-type configurations, as well as "baggy"-type configurations, the choice of a specific configuration depending on the particular materials of construction and the intended packaging, storage, and use environments of the condom.

Referring now to Figure 1, there is shown a most preferred type of condom according to the present invention. As illustrated, condom 10 comprises a main sheath portion 12 having a closed distal end 14 and an open proximal end 16.

The open proximal end of the condom may be circumscribingly bounded by a ring or bead 18 of elastic material, to aid in retaining the condom on the penis of a wearer.

Axially spaced forwardly (distally) from the open proximal end 16 of the condom is an annular-shaped sealing element 20 circumscribing an interior opening 22 of smaller size than the proximal end opening 16. The annular sealing element is joined at its outer periphery to the inner wall of the main sheath portion by means of the downwardly depending skirt portion 24 of the sealing element, as best shown in Figure 2, which is a cross-sectional, elevation view of the proximal part of the condom of Figure 1. The skirt portion 24 of the sealing element may be joined to the inner wall 26 of the condom in any suitable manner, as for example by adhesive bonding, heat sealing, tack welding, ultrasonic bonding, etc.

Thus, when the condom shown in Figures 1 and 2 is applied to the person of a wearer, the penis is inserted through the open proximal end 16 and through the interior 22 of the annular sealing element 20, whereby the annular sealing element, at its inner radial boundary surrounding the central opening, bears compressively against the circumference of the associated portion of the penis, thereby providing an additional barrier to the leakage of semen from the condom subsequent to ejaculation.

To the extent that the elastic ring 18 bears compressively against the circumference of the base of the penis, a further enhanced protection is provided against leakage of seminal fluid from the condom, or of penetration of vaginal exudates and secretions into the interior volume 28 of the condom.

Figure 3 is a perspective view of a condom according to another embodiment of the invention, with a corresponding cross-sectional elevation view of the proximal section thereof being shown in Figure 4.

This condom 30 has a generally tubular main sheath portion 32 which is closed at its distal end 34, where it is provided with a distal tip reservoir 36 for retention of ejaculate.

The main sheath portion 32 has an opening 40 at its proximal end 38. Joined to the main sheath portion at this proximal end opening is an annular-shaped sealing element 42 formed of a flexible elastic material and circumscribing an interior opening 44 of smaller size than the proximal end opening 40 of the main sheath portion. The annular sealing element 42 is joined to the proximal end 38 of the main sheath portion 32 by means of weld 46. In lieu of this weld, the annular sealing element may be joined to the proximal open end of the main sheath portion of the condom in any suitable manner, as previously described with respect to the securement of the annular sealing element to the interior of the main sheath in the embodiment of Figures 1 and 2.

The annular sealing element in the condom constructions previously described thus functions as a dam or diaphragm which aids in preventing the exchange of body fluids between sexual partners during coital activity.

Figure 5 is a partially broken-away, perspective view of a condom according to another embodiment of the invention, similar to that shown in Figure 1 (and correspondingly numbered with respect thereto), but further modified by the

addition of a second annular sealing element 50, which is constructed similarly to annular sealing element 20, and is positioned forwardly thereof in the distal portion of the condom.

Thus, the annular sealing element 50 circumscribes an interior opening 52 and is attached to the inner wall 26 of the condom along the outer circumferentially extending skirt 54 of the sealing element.

Figure 7 shows a partially broken-away perspective view, and Figure 8 a sectional elevation view, of a condom of the type shown in Figures 3 and 4 (Figures 7 and 8 being numbered correspondingly with respect thereto), but modified in the provision of a distal annular sealing element 56. This distal sealing element circumscribes an interior opening 58 and is secured to the inner surface of the distal wall of the main sheath portion of the condom, by means of downwardly depending skirt 60, the skirt being joined at its upper end to the periphery of the main disk portion of the annular sealing element.

The addition of the distal annular sealing elements in the Figures 5-8 embodiments provides additional protection against leakage of seminal fluid out of the condom.

Figure 9 shows a perspective view of a condom 62 comprising a tubular main sheath portion 64 having a closed distal end 66 and an open proximal end. At the proximal end of the main sheath portion is joined a donning/retention assembly 68, comprising an annular dam 70 circumscribing a central opening 72, and a radially outwardly and circumferentially extending enclosure 74, which is joined to the main disk portion of the assembly forming dam 70. The enclosure 74 may form a circumferentially continuous interior volume, which may

be filled with a suitable foam, fluid, or solid material imparting sufficient rigidity to the enclosure to render it manually grippable, for manual installation of the condom on a penis of a wearer, or manual removal of the condom from the wearer's penis, subsequent to coital activity.

Alternatively, the peripheral segment 74 of the assembly 68 may be formed as a solid member, thereby providing a circumscribing flap for manual application and removal of the condom.

Figure 10 is a perspective view of a condom 76 according to another embodiment of the invention. This condom comprises a generally tubular main sheath portion 78 having a closed distal end. The main sheath portion is open at its proximal end, and has an annular sealing element 82 joined to the upper edges of the sheath's proximal wall by means of weld or bead 84. Element 84 alternatively may constitute a resilient ring which is heat sealed to the annular sealing element 82 and the upper edges of the proximal wall of the sheath.

The annular sealing element 82 circumscribes an interior opening 86. Circumferentially surrounding the interior opening 86 is a weakened interior annular segment 88 which is circumferentially bounded by the outer extremity demarcated by dashed line 90. The weakened area 88 may for example comprise a region of reduced thickness relative to the outer circumscribing segment of the sealing element, or it may have been selectively irradiated to preferentially weaken such segment relative to the unirradiated outer segment of the sealing element, or the inner annular segment may be preferentially weakened in any other suitable manner or by any other suitable means.

The condom shown in Figure 10 thus provides a variably sizable opening, depending on the size characteristics of the penis inserted into the condom through the central opening 86. The provision of the inner annular weakened area in the dam 82 thus may be of advantage where it is desired to accommodate a wide range of wearer penis sizes.

Figure 11 is a perspective view of a condom 92 comprising a generally tubular main sheath portion 94 having a closed distal end 86, with a annular-shaped sealing element 98 being perimetrally joined to the open proximal end of the condom by means of circumferential weld 100. The dam element 98 has an opening 102 which is positioned off-center, as compared with the previously described annular sealing elements. Further, the opening 102 is non-circular in character. These features are intended to enhance the retainability characteristics of the condom on the penis of a wearer.

Figure 12 shows a condom 11 according to another embodiment of the present invention, featuring a main tubular sheath 13 having a closed distal end 15 and an open proximal end 17 circumscribed by rim 19. In this type of condom construction, the rim 19 preferably does not form any retentive function in application of the condom to the penis of a wearer.

Anterior to the open end 17 is a proximal length of the tubular main sheath which is provided with an outer coating 21 of a suitable adhesive material, which is tacky or otherwise self-adherent in character. The entire condom thus may be formed of a "baggy" or oversized configuration, to accommodate a varying size of penises and application to the body of a specific wearer, by installation of the condom on the wearer's penis, followed by circumferential lapping of a proximal portion of the condom as shown in Figure 12A.

Referring to Figure 12A, which shows a perspective view of a proximal portion of the Figure 12 condom, wherein the various elements are numbered correspondingly to Figure 12, a fold 23 of the condom may be formed at its proximal end and circumferentially lapped as shown, so that the adhesive coating 21 which is provided on the exterior surface of the tubular main sheath 13 adherently secures the fold 23 in position as shown, whereby the proximal opening 17 bounded by rim 19 is decreased in cross-sectional area, relative to the unlapped configuration shown in Figure 12.

It will be readily apparent that in lieu of the adhesive coating 21 employed at the proximal end of the condom shown in Figures 12 and 12A, it may be advantageous in some instances to utilize other means for adhering a circumferential fold to the adjacent outer surface regions of the condom. Thus, any suitable adhesive strips, tapes, and the like could be used. In some instances, the material of construction of the condom itself may have sufficient "cling" or self-adhering qualities to render the need for separate adhering means superfluous; condoms formed of such materials may simply be installed on the penis of a wearer, and then circumferentially gathered or lapped to secure the same reduction in cross-sectional area and good fit on the penis of a wearer, such as is achieved by the provision of an adhesive coating in the embodiment illustratively shown in Figures 12 and 12A.

Figure 13 is a top plan view of a folded sheet/stretched elastic ring assembly, with Figure 14 being a side elevation view of the same assembly as shown in Figure 13, taken along section 14-14 thereof.

Figure 15 is a top plan view of a condom article formed from the folded sheet and stretched elastic ring assembly of Figures 13 and 14.

With reference to Figures 13 and 14, a pair of transversely spaced-apart pins 104 and 106 are fixedly positioned relative to one another. For such purpose, the pins may be secured to a suitable base structure (not shown), the base being of planar horizontal character and having the pins secured to and vertically upwardly extending from the base structure. An elastic ring 108 then is stretched over the pins 104 and 106, the ring thereby circumscribing an opening 110 (see Figure 14). Through this opening a sheet of a flexible thermoplastic material 112 is inserted and the end flaps 114 and 116 are folded back as shown in Figure 14.

In this fashion, there is formed a folded sheet assembly comprising a proximal mouth 110 and longitudinally extending lappingly co-extensive sheet portions (layers 120 and 122 as shown in Figure 13), the lappingly co-extensive sheet portions forming main sheet panels terminating at a distal fold line 124. The proximal extremities 114 and 116 of the folded sheet are distally extended to lap one another exteriorly of the main panels 120 and 122 of the folded sheet.

The thus-folded sheet assembly then is heat-sealed and severed along the dashed line 126 shown in Figure 13, to provide a main sheath portion of the condom having a curved profile at its distal end, and being perimetrally heat-sealed.

After heat sealing and severing of the folded sheet assembly along line 126, the elastic ring 108 is removed from the pins retaining same, and the resulting article is everted (turned inside out), to yield the condom article shown in Figure 15, comprising a main sheath portion 128 having a closed distal end 130 and a proximal open end 132. The condom thus features an interiorly secured elastic retaining ring

108, and is continuously heat-sealed along its perimetral edge 134 extending from the proximal opening around the entire edge surface of the condom to the corresponding opposite portion of the proximal opening, when the condom is reposed on a flat surface as shown in the plan view of Figure 15.

It will be appreciated that the method of making a condom which is illustratively described above with reference to Figures 13-15, may be practiced with an elastic drawstring being employed in place of the elastic ring. Thus, an overhand knot may be tied in the elastic drawstring to form a loop therein, and the loop may be placed over the pins 106 and 108 in such a way that one drawstring extends laterally outwardly from one pin, while the other drawstring extends laterally outwardly from the other pin.

In this manner, a condom may be formed such that the ends of the drawstrings protrude from the proximal open end of the resulting condom, permitting it to be selectively tightened and tied in place on the penis of a wearer. Further, if the drawstring is constructed of a material such as a thermoplastic elastomer ribbon, a single overhand knot in the ribbon may allow the loop to be tightened and hold its tension without slipping.

Figure 16 shows a top plan view of a condom according to the another embodiment of the invention, and Figure 17 is a side elevation thereof along section 17-17.

The condom 136 shown in these drawings comprises a main sheath portion 138 formed by top and bottom panels 154 and 160 which are heat-sealed to one another along a perimetral edge 140 thereof, from a distal extremity 166 rearwardly to proximal opening 144, such edge seal defining an elongated U-shape, as shown in the top plan view of Figure 16.

The condom shown in these drawings may be formed of any suitable material of construction, preferably a thermoplastic elastomer, such as a polyurethane elastomer material. The main sheath portion thus is closed at its distal end and open at its proximal end. The condom has a proximal segment characterized by a reentrant fold 146 having a central opening 168 therein of smaller size than the proximal end opening 144. The reentrant fold is sealed at its margins to the main sheath portion at diametrally opposed side margins of the main sheath portion. The reentrant fold thus has a distal leading edge 148, and forms a dam or diaghragm structure of a character similar to condom embodiments previously described herein.

Joined to the main sheath portion of the condom at the proximal extremity thereof are respective diametrally opposed unrolling strips 150 and 156, joined at their distal extremities to the respective top and bottom panels 154 and 160 of the main sheath portion, by respective seals 152 and 158.

The seals 152 and 158 may be heat seals, or may be formed by ultrasonic welding, adhesive bonding, or any other suitable methods of affixment. The unrolling strips thus extend longitudinally distally of the distal end 142 of the condom, terminating in respective grips 162 and 164, to aid in manual gripping of the unrolling strips, when the condom is supplied in a rolled configuration formed by being rolled forwardly from its proximal end to its distal end, with the manually grips 162 164 protruding from the thus-rolled condom.

By the provision of such unrolling strips, the condom may be applied to the penis of a wearer by the simple expedient of manually gripping the respective gripping portions 162 and 164 and positioning the rolled condom at the distal end of the penis, followed by rearwardly manually pulling on the unrolling strips to reverse roll the condom onto the penis, from the distal end to the base thereof.

It will be appreciated that the unrolling strips are an optional feature of the condom shown in Figures 16 and 17, and that the same may be omitted, with the resulting condom being susceptible of application in a conventional manner, from a rolled configuration, or otherwise by pulling the condom onto the penis of the wearer.

Figure 18 shows a front elevation view of a rolled condom of the type shown in Figures 16 and 17, but without the provision of the aforementioned unrolling strips 150 and 156. Figure 19 is a side elevation view of the rolled condom of Figure 18, taken along line 19-19 thereof.

As illustrated, the rolled condom features a peripheral roll 170, which comprises the major length of the main sheath portion of the condom, the main sheath portion being folded back on itself until the closed distal end 142 and the membrane dam 148 are in juxtaposition with one another. This configuration avoids retention of a rolled condom structure in packaging or storage for prolonged periods under a deleterious condition of strain on the membrane dam.

By way of example, if the central opening 168 in the membrane dam 148 has a relaxed (unstretched) diameter of 0.5 inch and the flat width of the condom is 3 inches, rolling the entire condom will stretch the ½ inch diameter opening to a diameter of about 2 inches. If the condom then is stored in this rolled condition for a prolonged period, the condom material of construction, such as a thermoplastic elastomer, will relax until the opening may be too large for some users of the condom article. In the rolled configuration shown in Figures 18 and 19, the membrane dam 148 is not rolled and will be in a relaxed mode until the condom is donned.

Figure 20 shows a partially broken away side elevation view of a condom 172 according to the present invention, such as may be produced with an extrusion blown seamless tubular body 174 forming the main sheath portion of the condom, the distal end (not shown) being sealed by heat sealing or any other suitable manner to provide a closed distal end. In this specific condom configuration, the provision of folding, as hereinafter described, avoids the need for heat sealing of the proximal opening of the condom. The proximal end 176 of this condom is formed with a membrane dam 178 having a central opening 180 therein, by folding the proximal end of tubing 174 to provide reentrant folds which are concentric with respect to one another, as shown. Thus, the distal end of the extrusion blown tube is folded back to form a first reentrant fold 182, followed by forming a second reentrant fold 184 comprising the membrane dam portion 178 and tube opening 180. There is thereby provided a three-layer structure 186 adjacent the proximal main side wall portion of the tube 174. The double reentrantly-folded tube then is heat-sealed along the proximal wall portion comprising the three-layer structure, and along the mouth of proximal end opening 188, to form a heat-sealed structure comprising an integral membrane dam configuration.

It will be recognized that the tubular stock utilized in forming the condom by reentrant folding may be reentrantly folded more than twice, or alternatively only once. The double reentrant fold configuration shown, however, provides a proximal membrane dam structure for the condom which is readily formed and provides a proximal structure which is resistant to leakage of seminal fluid.

Figure 21 is a rear elevation view, and Figure 22 a side elevation view, of a condom and applicator assembly, which may advantageously employed with thermoplastic elastomeric condoms

according to the present invention, to avoid stretching of an elastic rim or ring of the condom during storage. The applicator 190 is of cylindrical shape, and may be formed of a rigid plastic, cardboard, or other suitable material of construction. The condom 192 is formed with a proximal retaining ring 194 in spaced-relationship to the rear opening of the condom, so that a length of the main sheath portion extends proximally from the retention ring 194 to the rear-most opening of the condom, as a "skirt" of the condom.

This skirt 196 is stretched and folded over the applicator 190 as shown in Figure 22, with the retention ring 194 thus being interiorly disposed in the cylindrical applicator and maintained in an unstretched position. The condom forwardly of the retaining 194 comprises a membrane dam 198 having a central opening 200. The membrane dam thus is reposed in the interior of the applicator ring and likewise is maintained in an unstretched, relaxed condition. Distally of the membrane dam 198 is the main portion of the main sheath, which is collapsed forming a series of folds 202 which likewise are retained interiorly in the applicator.

In use, the condom 192 is applied by inserting the penis into the applicator, so that the distal end of the penis is in contact with the distal end 204 of condom 192, the penis likewise extending through the opening 200 in the membrane dam 198. The applicator ring then is drawn rearwardly towards the body of the wearer, over the length of the penis toward its base, and then the skirt of the condom is removed from the applicator, following which the applicator is passed outwardly over the penis and removed at its distal end, for subsequent disposal.

By this construction, the condom and applicator assembly of Figures 21-22 maintains the condom in an unstressed condition, so that no deformation of the elastic ring 194 or membrane dam 198 results.

Figure 23 is a top plan view, and Figure 24 a side elevation view, of a condom applicator according to another embodiment, wherein the applicator comprises a main cylindrical portion 206 having on its upper end a series of circumferentially spaced-apart, upwardly extending prongs 208. The prongs may, as shown, feature enlarged spherical heads, or otherwise be appropriately shaped to accommodate reposing the condom thereon, without damage to or tearing of the condom.

A condom 210 is shown in dotted line representation in Figures 23 and 24, as being reposed at its proximal open end on a diametrally opposed pair of prongs 208a and 208b. The open proximal end of the condom thus is folded back on itself to overlay diametrally opposite prongs, to thereby retain the condom on the applicator, but without significant deformation thereof. The remaining length of the main sheath portion of the condom may be folded or gathered in any suitable fashion, such as the pleated folding 212 shown in Figure 24.

The condom in this fashion may be packaged and stored for prolonged periods without undue stretching of the condom.

At the time of use, the condom and applicator assembly may be removed from a package (not shown) and the proximal open end of the condom is stretched onto the remaining prongs, to provide an opening of suitable dimension for insertion of the penis into the condom. Again, as in the previously described embodiment of Figures 21-22, the applicator 206 is rearwardly translated to the base of the penis, where the proximal extremity of the condom is removed from the prongs

208. The applicator then is drawn distally over the now-sheathed penis, and the applicator may subsquently be discarded or reused, as appropriate.

Figure 25 is a top plan view of a folded sheet 214 such as may be usefully employed to form a condom from a suitable sheet material, such as a thermoplastic elastomer material. A corresponding edge view of the folded sheet as shown in Figure 26, taken along line 26-26 of Figure 25. As shown, the folded sheet comprises overlapping panel segments 216 and 218, which are co-extensively positioned with respect to one another, and a reentrant fold 220 at one extremity of the folded sheet.

A central opening 222 is provided in the reentrant fold, and may be formed initially, prior to folding of the sheet, or it may be formed in the reentrant fold material at any subsequent time during manufacture of the condom.

The central opening 222 in the reentrant fold 220 is centrally positioned in the reentrant fold material and may be configured such that the opening defines a semi-circular profile when the reentrant fold is reposed in a flat configuration as shown in the top plan view of Figure 4.

Subsequent to overlapping and reentrantly folding the sheet 214, the folded sheet is heat-sealed and severed along dotted line 224, and then heat-sealed and cut along marginal lines 226. The resulting product is the condom article shown in Figure 27, comprising a main sheath portion 228 which is perimetrally sealed along its edge 230, having a closed distal end 232 and an open proximal end 234 whose proximal extremity is bounded by respective flaps 236 and 238 which provide extended surface elements for manual gripping to apply the condom to the penis of a wearer.

85

The reentrant fold 220 in the final configuration provides a membrane dam surrounding a central opening 222 through which the penis is inserted when the condom is applied to the body of a wearer, the membrane dam providing the function of assisting the retention of the condom on the wearer's penis, as well as to prevent fluid flow into or out of the interior volume of the condom.

Figure 28 is a partially broken-away, perspective view of a manufacturing apparatus for forming a heat-sealed condom.

Referring to this drawing, a film 240 of a thermoplastic elastomer material is placed on a platen 242 over a U-shaped heat-sealing element 244, which may suitably be an electrical resistance heating wire joined to a suitable source of electrical energy (not shown for clarity). A portion of the film at the proximal end thereof is folded back on itself as shown, to provide a hem 246 as a two-layer overlapped region of the thermoplastic sheet.

The heat-sealing unit 248 comprises 2 to 4 turns of heating element wire 250, wrapped in helix. Over this heat-sealing element 248, a film tube 252, which for example may have a length (measured in the longitudinal axis of the condom being formed) of about 1 inch, and a flat width of from about 0.25 to about 0.5 times the width of the heat-sealing element 248, is stretched over the heat-sealing element 248 so that it covers the heating element wires 250. A second sheet of film material 254, folded back on itself at its proximal end to form hem 256, then is superposed on the first sheet 240, to mate co-extensively therewith.

A second platen 258 then is brought down on the superposed sheet array, and then electrical energy is sequentially or concurrently applied to the heat-sealing

element 244, and the helically wound leads 260 and 262 of the heat-sealing element 248, to heat-seal the sheets to one another along a U-shaped profile defined by the U-shaped heat sealing element 244, and to heat seal the stretched film tube 252 to the interior surface of the hems 246 and 256. The resulting article then is removed form the forming apparatus, and trimmed.

There is resultingly formed a condom comprising the stretched film tube 252 bonded to the two hems, to function as an elastic garter to contract the opening uniformly around its circumference at the proximal end of the condom.

It will be appreciated that in lieu of the specific film tube 252 employed to form the elastic garter in the condom formed by the apparatus in Figure 28, it may be advantageous to use a suitable elastic ribbon which is circumferentially wrapped around the heating element 248 and held in position by spot welding or otherwise securing the respective overlapping ends thereof to one another.

Figure 29 is a cross-sectional view of a condom rolling apparatus, such as may be usfully employed to roll condoms for packaging and/or storage prior to use.

The apparatus comprises a stationary cylinder 270 comprising a main cylindrical surface 272 which is perforated over substantially its entire areal extent, and bounded by a distal bulkhead 274 and a proximal wall 276. The proximl wall 276 has a central opening to accommodate axial sliding movement therein of the evacuation conduit 278. The proximal wall 276 also is provided with a suitable opening within which is disposed the distal end of pressurizing conduit 280.

The openings in proximal wall 276 are appropriately sized to accommodate the respective conduits 278 and 280 in a leak-tight fashion. For example, the juncture between proximal wall 276 and the reciprocatable, axially slidable conduit 278 may be accommodated by a suitable O-ring or other sealing means, such as a packing ring structure. The juncture between proximal wall 276 and pressurizing conduit 280 may be leak-tightly secured by welding of the conduit to the wall at the appertaining opening.

The vacuum withdrawal conduit 278 is joined to suitable evacuation means, such as a pump or blower (not shown for clarity), so that the flow of gas being evacuated is in the direction indicated by arrow 282. The vacuum withdrawal conduit 278 is fixedly secured at its distal end to an annular-shaped baffle plate 284, the baffle plate being of sufficient size to accommodate a sealed longitudinal sliding movement of the baffle plate in the interior volume of stationary cylinder 272.

The vacuum withdrawal conduit 278 is fixedly secured to the end wall 286 of a moveable outer cylinder 288 which is coaxial with and overlies the stationary inner cylinder 270. The end wall 286 of the moveable outer cylinder 288 also has an opening therein to accommodate the slidable passage therethrough of pressurizing conduit 280. The pressurizing conduit 280 is connected at its proximal end to a suitable gas supply means such as for example an air compressor (not shown for clarity), to introduce gas at elevated pressure into conduit 280 in the direction indicated by arrow 290.

The annular baffle 284 thus at any given point of axial translation of the moveable outer cylinder divides the interior volume of the inner cylinder 270 into a distal

compartment 292 which is evacuated to be at a relatively lower pressure, and a proximal chamber 294 which is pressurized by gas introduced from pressurizing conduit 280, so as to be at a relatively higher pressure level.

The distal end of the moveable outer cylinder 288 features a circumferentially extending collar 296 enclosing an inner circumferentially extending volume 298 which receives gas from the pressurizing chamber 294 through openings in the perforated wall 272 of the inner cylinder, and discharges same distally of the outer cylinder through the discharge slot 300 between the distal lip of the collar and the surface of the inner cylinder 272.

In use, the outer cylinder 288 is proximally retracted, and a condom 302 is applied over the exterior surface of the inner cylinder 270. The distal chamber 292 in such cylinder then is evacuated through the gas withdrawal passage 278, so that the negative pressure gradient thereby produced retains the condom on the inner cylinder against movement.

Concurrently, gas is introduced into the pressurizing conduit 280 and the outer cylinder is translated axially forwardly, so that gas is discharged from the annular discharge slot 300 between the respective cylinders to cause the condom to roll forwardly and produced a rolled configuration 304, as the outer cylinder is axially forwardly translated to its maximum distal extent.

At the maximum distal extent of travel of the outer cylinder relative to the inner cylinder, the rolled condom is removed from the cylinder at the bulkhead wall 274 and packaged and/or stored for subsequent use.

Figure 30 is a cross-sectional, elevation view, and Figure 31 a top plan view, of a heat-sealing and thermoforming apparatus for making condoms.

The apparatus comprises an outer cylindrical shell 306 joined at its lower portion to end block 308, by means of straps 310, to allow loose fitting of the end block 308 to the cylindrical shell 306. The end block 308 suitably is formed with a concave contour 312 approximating the frontal contour of the condom to be formed.

In the interior volume 314 defined by the cylindrical shell 306, there is disposed a pouch 316 of extruded or heat-sealed tubular film with a heat-sealed closed distal end 318.

At the upper portion of the cylindrical shell 306 is interiorly mounted a second end block 320 having a central cylindrical passage 322 therein. Disposed in passage 322 is a compression stopper which is diametrically expandable by tightening nut 326 against washer 328.

A balloon 330, formed of a suitable material such as latex, is reposed interiorly of the tubular film pouch 316. The respective necks of the balloon 330 and the tubular film pouch 316 are compressed between the inner wall surface of cylindrical passage 322 of the end block 320, and the compression stopper 324.

The neck of the balloon 330 is cemented or otherwise affixed permanently to the compression stopper 324. A central tube 332 is interiorly disposed in the balloon 330 and acts as a mandril for the compression stopper 324. The tube 332 also provides an air inlet, being open at its lower end, for

inflating the inner balloon and outer thermoplastic tubular film. The upper end of this tube is connected to a selectively controllable source of pressurized gas (not shown for clarity).

In use, the tubular film pouch 316 is pulled over the balloon 330 and the compression stopper 324. The stopper and attached pouch then are placed in the assembly as shown in Figure 29, and the two balloons are sealed by compressing the compression stopper, via tightening of the compression nut 326. The pouch 316 then is inflated, by introducing into the balloon from gas flow passage 336 of tube 332, air or other pressurizing gas, as for example air at a pressure of 1-3 psig.

The entire assembly as illustrated in Figure 30 then is placed in an elevated temperature medium, such as boiling water or an oven at a sufficient thermoforming temperature. After sufficient exposure to the elevated temperature conditions, which may for example involve an exposure time on the order of 0.5 to 3 minutes, the assembly is quenched in a suitable quenching medium such as water at ambient temperature, or by air blast exposure to air at ambient temperature.

The forming assembly then is disassembled, and the thermoplastic condom, produced by expansion of the pouch 316 to conform to the interior shape of the cylindrical shell 306 and the interior contours of the end blocks 308 and 320, is removed from the compression stopper after it has been loosened and contracted to a suitable diametral extent allowing for removal of the finished condom. Thus, a condom is formed which has assumed the shape of the interior bounding

surfaces of the thermoforming assembly, and a reduced diameter neck is retained on the condom to facilitate retention on the penis of a wearer in use.

Figure 32 shows a top plan view of a condom according to another embodiment of the invention, and Figure 33 shows a cross-section of the condom at an intermediate portion of its length between its closed distal end 342 and its open proximal end 344, which may be circumferentially bounded by an elastic retaining ring 346, or other suitable retention structure. The main sheath portion of the condom 348 is axially overlapped by the provision of a reentrant fold 350, thereby yielding a condom with a distal leading edge 352 of an axially overlapped section 354, the overlapped section interiorly terminating at a proximal edge 356 of the reentrant fold, as shown in Figure 33.

The axially overlapped intermediate section 354 thus comprises a three-layered fold construction, and adjacent layers in the folded construction are secured to one another by the spot welds 360 and 362, securing the adjacent outer layers, and the spot welds 364 and 366, securing the adjacent inner layers of the folded construction to one another.

It will be apparent from the foregoing that the axial overlapping produced by reentrant folding of the condom in the manner described will shorten the condom to a length which is less than the initial fully extended length of the condom, by an extent which is approximately twice the axial extent of the intermediate folded section 354. If, in use, it is desired that the condom have a length which is greater than that provided with the overlapped configuration, it simply is necessary to rearwardly (proximally) extend the proximal portion of the condom relative to the distal portion thereof,

to break the spot or tack welds 360, 362, 364, and 366, thereby extending the condom to its original fully extended length (prior to reentrant folding thereof).

In lieu of the tack welds, there may be provided discrete amounts of adhesive or other bonding medium, or the respective layers of the reentrant fold may be secured to one another in any other suitable manner which does not adversely affect the structural integrity of the condom when the attachments between respective layers are broken and the condom is lengthened to a fully extended condition.

It will be appreciated from the foregoing that the condom may be reentrantly folded at additional positions along its length, to provide for greater variability in the length of the condom, so that if breaking of the bonds between adjacent layers of a first reentrant fold does not produce a condom of desired length characteristics, then an additional reentrant fold may be unfolded by breakage of the attachments between adjacent layers thereof, to provide the additional length desired.

Figure 35 is a top plan view, and Figure 35 a corresponding side elevation view in cross-section, taken along line 35-35 of Figure 34, showing a thermoformer appparatus for forming condoms. The thermoformer device 370 comprises a cylindrical shell 372, joined at one end to an end block 374 having a generally concave interior surface 376 extending convergingly toward an outwardly flaring mouth 378 of the block.

At its opposite end, the cylindrical shell 372 is joined to a second end block 380 providing a concave surface profile approximating the contour of a condom to be formed by the device. In the frontal cavity 382 of this end block is

disposed a perforate insert 384, comprising a series of axially extending, laterally spaced-apart gas flow passages 386, by means of which the main interior volume 388 in the cylindrical casing 372 communicates with the cavity 382 and the interior gas flow passage 396 of gas removal conduit 398.

The gas removal conduit 398 in use is attached to a suitable gas evacuation means, as for example a blower or vacuum pump (not shown for clarity). A tubular film article, sealed at one end thereof, and serving as a preform or precursor article for the condom to be manufactured, then is attached at its open end to the exterior surface of the mouth 378 of end block 374. In other words, the tubular preform features an open distal end which is stretched over the mouth of end block 374, so that the condom preform is exteriorly extended from the end block mouth.

The gas evacuation means then is actuated to withdraw air from the interior cavity 388 of the cylindrical housing 372, through the gas flow passages 386 and cavity 382, for discharge from the thermoformer apparatus in gas withdrawal conduit 398. Such evacuation draws the condom preform in inverted fashion into the interior cavity 388 of the thermoformer, where the pressure differential forces the condom preform to assume the shape of such interior cavity.

A stopper (not shown) of a size accommodating leak-tight fitting to the mouth 378 of end block 374 then is placed in the mouth, while negative pressure is maintained on the interior cavity to retain the condom preform in expanded condition, assuming the shape of the interior cavity of the thermoformer.

The thermoformer then is subjected to elevated temperature (by means not shown), such as for example a heating tape or electrical resistance element helically wrapped onto cylindrical casing 372, to cause the casing and end blocks to reach a suitable thermoforming temperature, as for example on the order of about 250°F, at which the expanded condom will be thermally permanently conformed to the contours of the cavity 388. Subsequent to achievement of the thermoforming temperature, the thermoforming assembly is cooled to ambient temperature, and the negative pressure differential imposed on the thermoplastic film discontinued.

The now formed condom may subsequently be removed from the thermoforming apparatus by flowing a gas at suitable elevated pressure through conduit 396, cavity 382 and gas flow passages 386 into the cavity 388, whereby the condom is forced outwardly from the thermoformer after the stopper has been removed from mouth 378.

While the invention has been described with reference to specific embodiments and features, it will be appreciated that numerous modifications, variations, and embodiments of the invention are possible, and all such apparent variations, modifications, and embodiments are therefore to be regarded as being within the spirit and scope of the invention.

THE CLAIMS

What Is Claimed Is:

1. A condom comprising a generally tubular main sheath portion formed of an elastic material, closed at a distal end thereof and open at a proximal end thereof, with an annular-shaped sealing element formed of an elastic material circumscribing an interior opening of smaller size than said proximal end opening, and joined at its outer periphery to the main sheath portion at or in the vicinity of said proximal end opening.

2. A condom according to Claim 1, wherein the sealing element is integrally joined to the main sheath portion at said proximal open end thereof.

3. A condom according to Claim 2, comprising diameterally opposed heat seals extending longitudinally along the main sheath portion, said heat seals converging at said distal end, with the sealing element being joined to the main sheath portion at the proximal end thereof by the diameterally opposed heat seals along the main sheath portion.

4. A condom according to Claim 3, which when reposed in a flat configuration with the heat seals perimetrally aligned, has the interior opening circumscribed by the sealing element defining a substantially semi-circular cut-out in the sealing element.

5. A condom according to Claim 1, wherein said sealing element is joined at its outer periphery to the main sheath portion in the interior thereof, with the sealing element in longitudinally spaced relationship to the proximal end opening of the main sheath portion.

6. A condom according to Claim 5, wherein said sealing element is heat sealed at its outer periphery to the main sheath portion.

7. A condom according to Claim 1, wherein the main sheath portion and the sealing element are formed of thermoplastic elastic material.

8. A condom according to Claim 7, wherein the main sheath portion and the sealing element are both formed of a same thermoplastic elastic material.

9. A condom according to Claim 7, wherein said thermoplastic elastic material is selected from the group consisting of: polyurethanes; polyether block amides; styrene-rubber-styrene block copolymers; polyesters; olefinic homopolymers and copolymers; and copolymers, composites, and alloys thereof.

10. A condom according to Claim 1, wherein the main sheath portion is formed by blow extrusion.

11. A condom according to Claim 1, wherein the proximal end opening is bounded by a reinforcement ring joined to the main sheath portion.

12. A condom comprising a generally tubular main sheath portion formed of a thermoplastic elastic material, closed at a distal end thereof and open at a proximal end thereof, the condom having a proximal segment characterized by a reentrant fold having a central opening therein of smaller size than the proximal end opening, said reentrant fold being marginally sealed to the main sheath portion at diametrally opposed side margins of the main sheath portion.

13. A condom according to Claim 12, wherein the marginal seals are heat seals.

14. A condom according to Claim 12, wherein the main sheath portion is formed of a thermoplastic elastic polyurethane material.

15. A condom according to Claim 12, comprising diametrally opposed heat seals extending longitudinally along the main sheath portion and converging at said distal end thereof, with the reentrant fold being marginally sealed by said diametrally oppposed heat seals.

16. A condom comprising a generally tubular main sheath portion closed at a distal end thereof and open at a proximal end thereof, with at least one unrolling strip extending longitudinally of said main sheath portion, attached to said main sheath portion in the vicinity of the proximal end thereof and extending distally forwardly of the distal end of the main sheath portion.

17. A condom according to Claim 16, comprising a pair of diametrally opposed unrolling strips.

18. A rolled condom according to Claim 16, with distal end(s) of said unrolling strip(s) protruding from the rolled condom.

19. A method of making a condom, comprising the steps of:

(a) providing a sheet of a thermoplastic elastic film;

(b) laterally folding said sheet along a lateral fold line to provide lapped main panel portions of the folded sheet;

(c) forming an opening in the laterally folded sheet at an intermediate part of the lateral fold line;

(d) longitudinally inserting a portion of the sheet comprising the fold line reentrantly into the folded sheet to position the fold line between the folded sheet main panel portions and at a leading edge of the inserted reentrant portion; and

(e) heat sealing the folded sheet along lateral peripheral margins thereof, from the inserted reentrant portion forwardly to a distal portion thereof, to sealingly enclose an interior volume of the folded sheet, with the reentrant portion heat sealed at lateral peripheral margins thereof to the lateral peripheral margins of the main panel portions of the folded sheet.

20. A method according to Claim 19, wherein said thermoplastic elastic material is selected from the group consisting of: polyurethanes; polyether block amides; styrenerubber-stryrene block copolymers; polyesters; olefinic homopolymers and copolymers; and copolymers, composites, and alloys thereof.

21. A method according to Claim 19, wherein said sheet is formed of a polyester-based polyurethane.

22. A condom article comprising a generally tubular main sheath portion formed by superposed panels perimetrally heat-sealed to one another along side and distal margins thereof, said panels being constructed of a flexible thermoplastic elastic material, and with said tubular main sheath portion being closed at a distal end thereof and open at a proximal end thereof.

23. A condom and applicator assembly, comprising an applicator ring, and a condom comprising a generally tubular main sheath portion formed of a flexible elastic material, closed at a distal end thereof and open at a proximal end thereof, and comprising a means for compressively retaining the main sheath portion on the penis of a wearer, said compressive retention means being provided at a position which is distally spaced from the proximal open end of the main sheath portion, with a section of the main sheath portion proximal to the compressive retention means being circumferentially stretched over the applicator ring such that the compressive retention means is not stretched.

24. A condom and applicator assembly comprising a ring-shaped applicator having a series of circumferentially spaced-apart, longitudinally extending prong elements thereon, the applicator having the proximal open end of the condom stretched onto less than all of the prongs, so that upon usage, the proximal open end can be stretched over the remaining prongs to facilitate penis insertion into the condom.

25. A method of forming a condom article, comprising:

(a) stretching an elastic ring radially outwardly;

(b) while the ring is in stretched condition, lappingly folding a thermoplastic sheet over the ring;

(c) peripherally heat sealing respective lapped sections of the thermoplastic sheet to one another along longitudinally and distal edges thereof; and

(d) everting the resulting heat-sealed article.

26. A method of forming a condom article, comprising:

(a) superposing elongate sheets of thermoplastic elastic material;

(b) stretching a collar of thermoplastic elastic film over a heat sealing element and inserting the heat sealing element between the superposed;

(c) heat sealing the superposed sheets along longitudinal and distal edges thereof, and

(d) actuating the heat sealing element to bond the stretched collar to the interior of the unsealed open end of the superposed and heat-sealed sheets, thereby forming an integral heat-sealed garter for the resulting condom article.

27. A method for making a heat-sealed condom with an open end, comprising placing a small diameter condom blank of thermoformable material having a pouch-like form in a larger diameter cavity; inflating the condom blank in the cavity through an open end of the condom blank; and, while maintaining the open end of the condom in an unheated condition, heating the remainder of the condom blank to thermally relax it to the dimensions of the cavity.

28. A heat-sealed condom with proximal end flanges, the condom being formed with a reentrant fold at a proximal open end thereof, with heat seals along longitudinal side edges of the condom extending only part way to the proximal end thereof, and with said flanges at the proximal open end.

29. A condom comprising a generally tubular main sheath portion formed of a flexible elastic material, closed at a distal end thereof and open at a proximal end thereof, with an annularly shaped sealing element formed of a flexible elastic material circumscribing an interior opening of smaller size than the proximal end opening, the sealing element extending radially outwardly to a greater diametral extent than the diameter of the main sheath portion, and joined to the proximal open end of the main sheath portion, to provide a peripheral annular segment of the sealing element.

30. A condom according to claim 29, wherein the peripheral annular segment of the sealing element comprises a circumferentially extending peripheral cavity having disposed therein a rigidifying material, whereby the rigidified peripheral annular segment of the sealing element provides a manually grippable extended area, to aid in application of the condom to the penis of the wearer.

31. A condom article having an annular-shaped sealing element formed of elastic material circumscribing an interior opening of smaller size than the proximal end opening of the condom, and joined at its outer periphery to the main sheath portion of the condom at or in the vicinity of the proximal end opening, wherein the interior opening is circumscribed by a weakened material portion accommodating enlargement of the opening incident to application to a correspondingly sized penis of a wearer.

32. A variable length condom, comprising a generally tubular main sheath portion formed of a flexible elastic material, closed at a distal end thereof and open at a proximal end thereof, wherein an intermediate length portion of the tubular main sheath is longitudinally and reentrantly lapped, and tack welded or otherwise weakly bonded, so that the length of the condom may be increased by tensional translation of the proximal portion of the condom relative to the distal portion thereof.

33. A condom comprising a generally tubular main sheath, closed at a distal end thereof and open at a proximal end thereof, wherein a proximal part of the tubular main sheath is circumferentially adherently self-lappable.

34. A condom according to Claim 33, comprising a coating of self-adherent adhesive material on a proximal outer surface region of the tubular main sheath.

35. A condom according to Claim 34, wherein the adhesive coating is circumferentially continuous at a proximal part of the condom on an outer surface of the tubular main sheath.

36. A condom according to Claim 33, wherein the tubular main sheath is formed of a material of construction which is self-adherent in character at a proximal part of the tubular main sheath.

ABSTRACT OF THE DISCLOSURE

Condoms are disclosed of the type comprising a main sheath portion closed at a distal end and open at a proximal end thereof, which are amenable to construction from thermoplastic elastomeric materials. In one preferred aspect, such condoms comprise an annular-shaped sealing element, formed of an elastic material, circumscribing an interior opening of smaller size than the proximal end opening of the condom, and joined at the outer periphery of the sealing element to the main sheath, at or in the vicinity of the proximal end opening. Such construction thereby provides a membrane dam in the proximal segment of the condom to enhance its effectiveness as a contraceptive and to minimize the incidence of sexually transmitted diseases. Also disclosed are various condom manufacturing and processing apparatuses, as well as applicators for applying the condoms to the penis of a wearer.

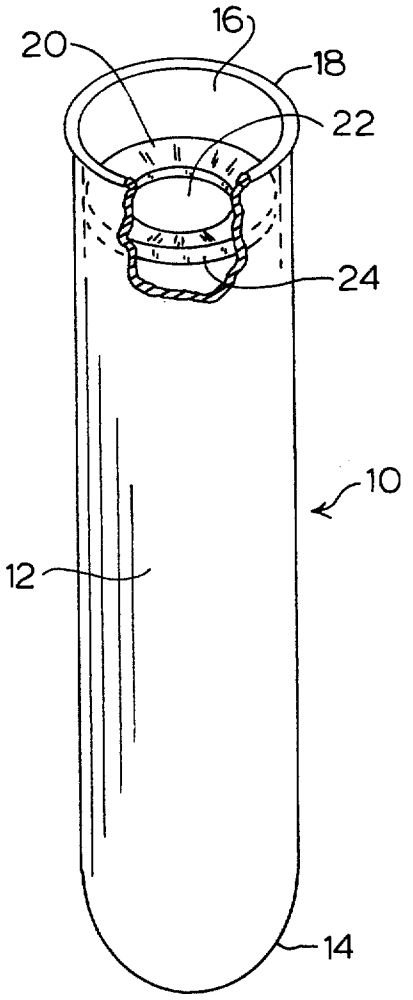

FIG. 1

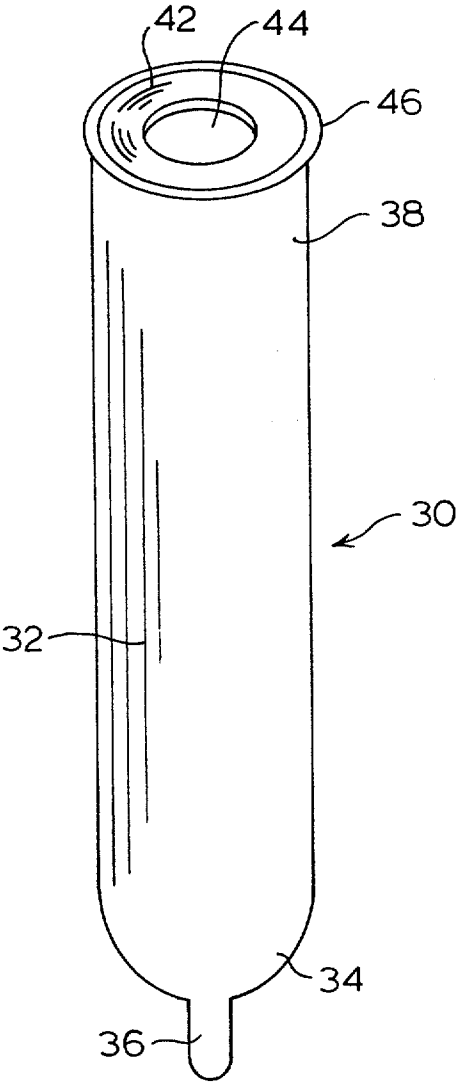

FIG. 3

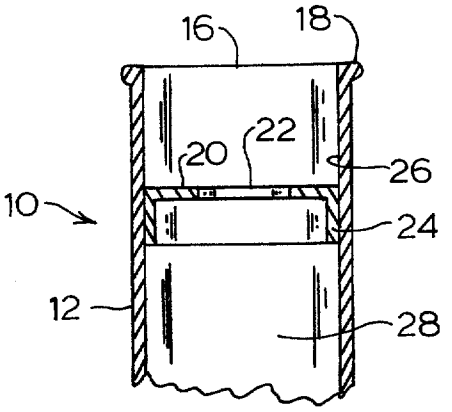

FIG. 2

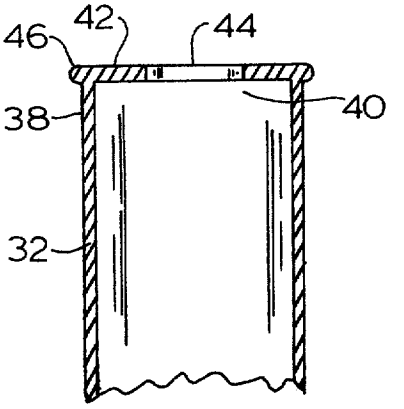

FIG. 4

105

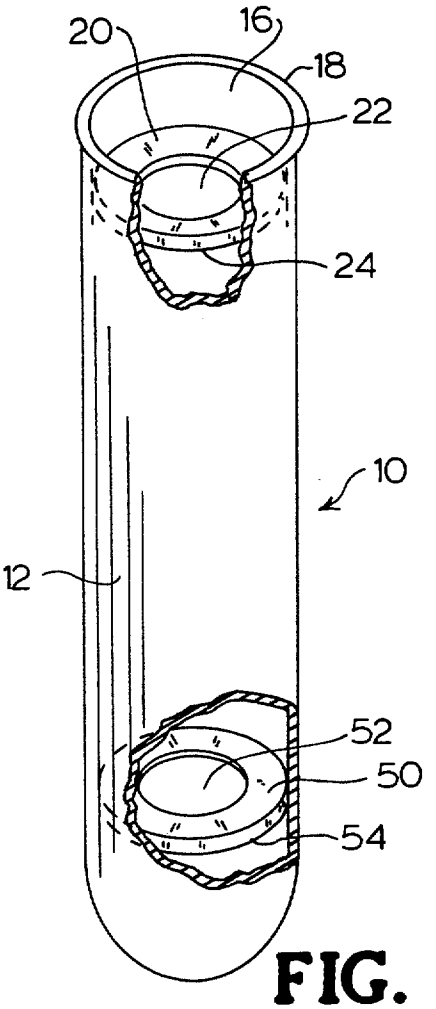

FIG. 5

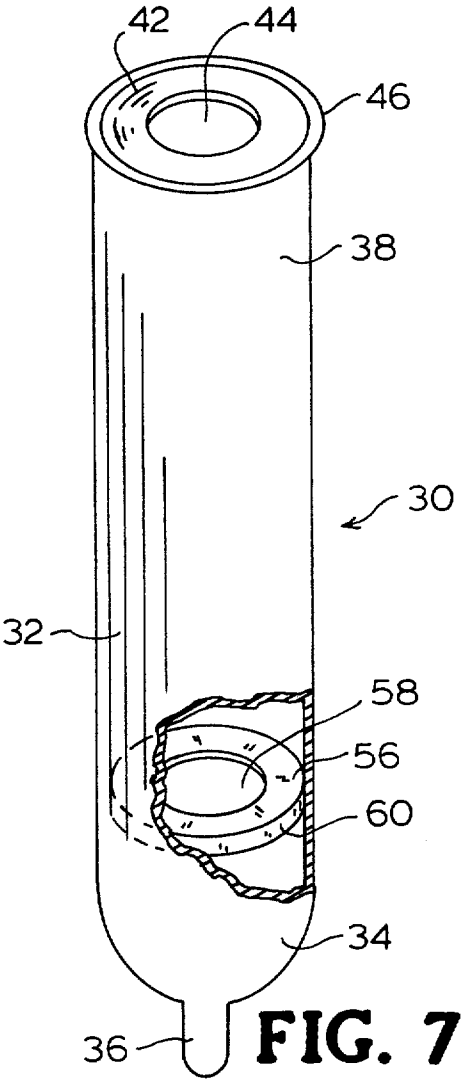

FIG. 7

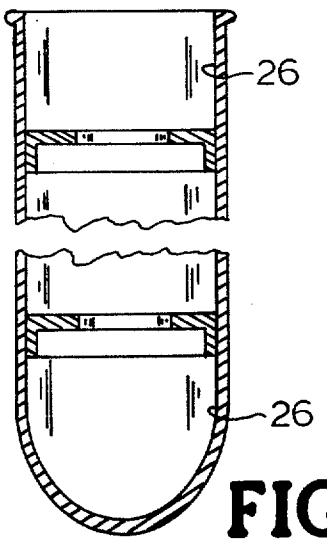

FIG. 6

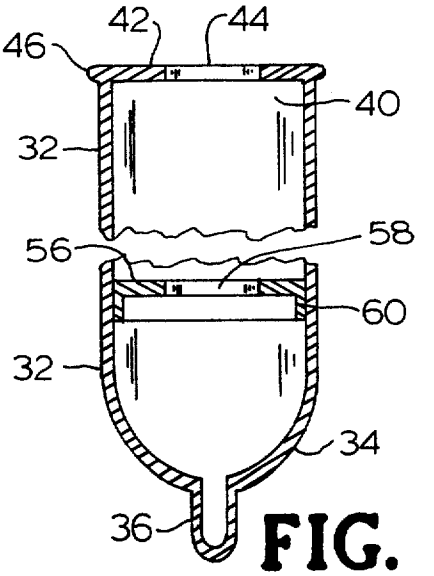

FIG. 8

106

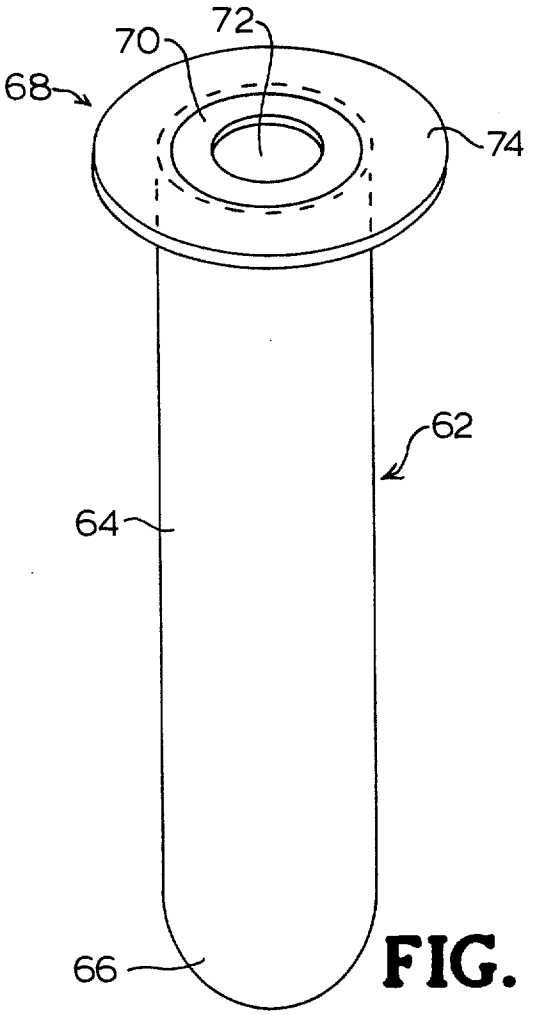

FIG. 9

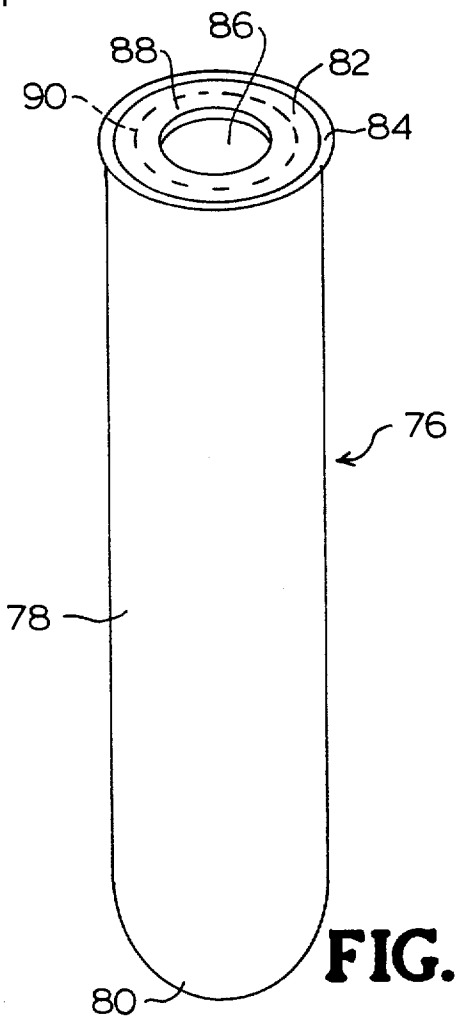

FIG. 10

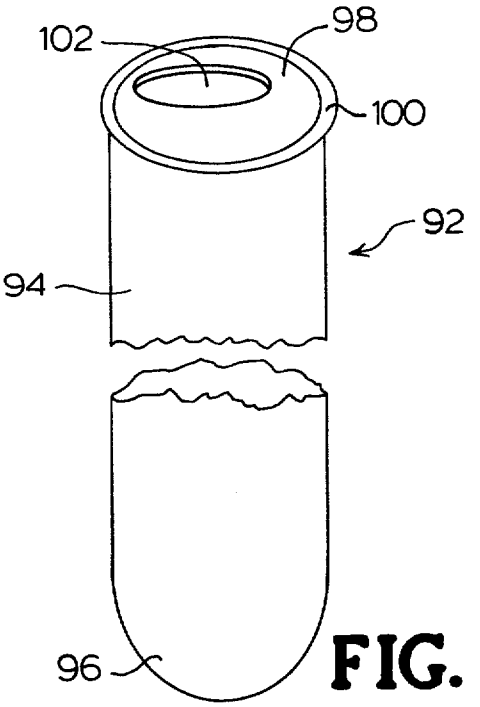

FIG. 11

107

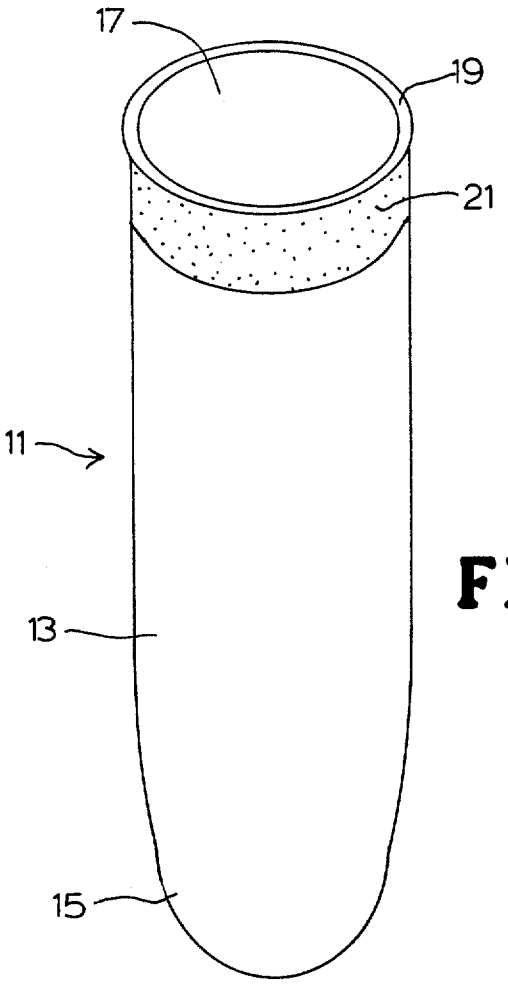

FIG. 12

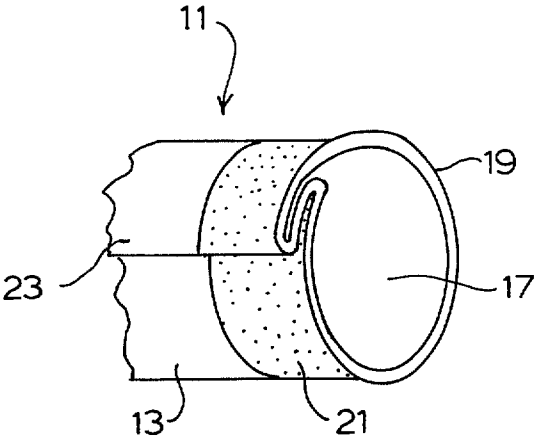

FIG. 12A

108

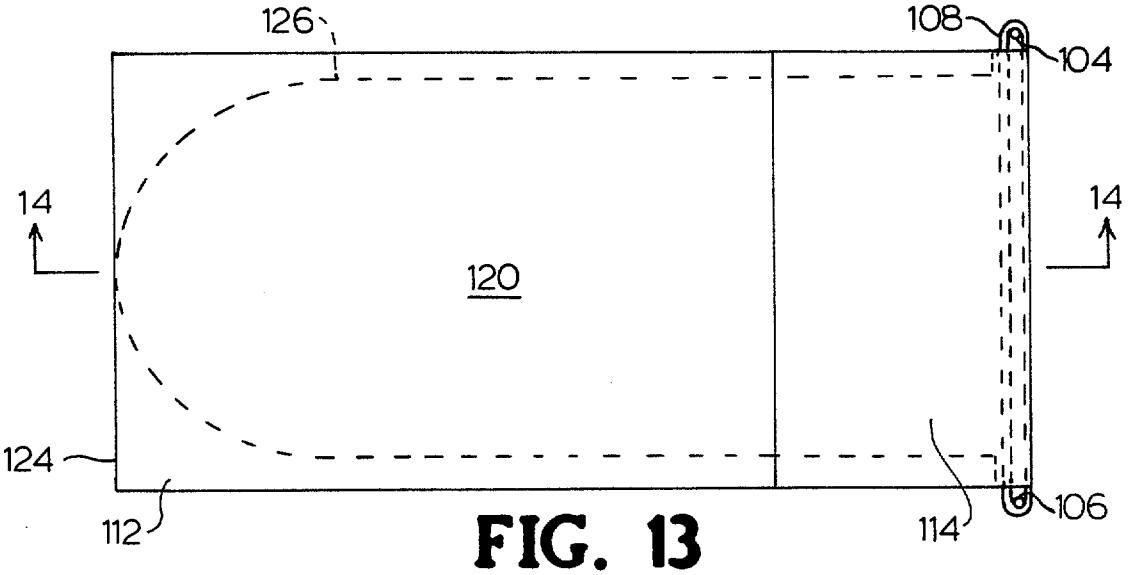

FIG. 13

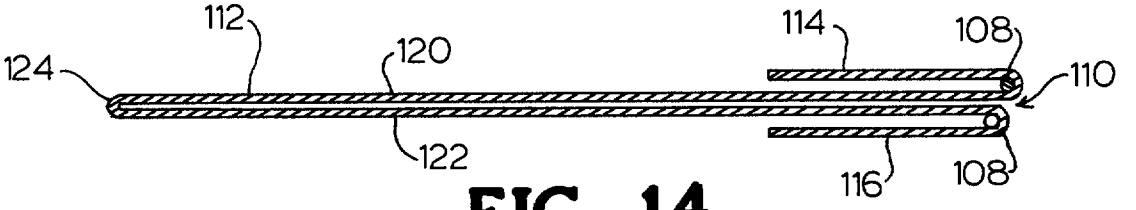

FIG. 14

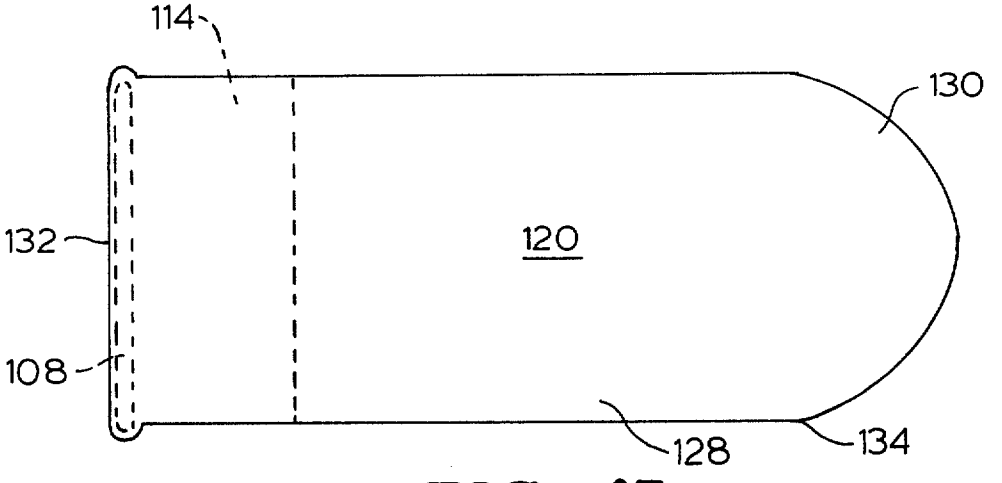

FIG. 15

109

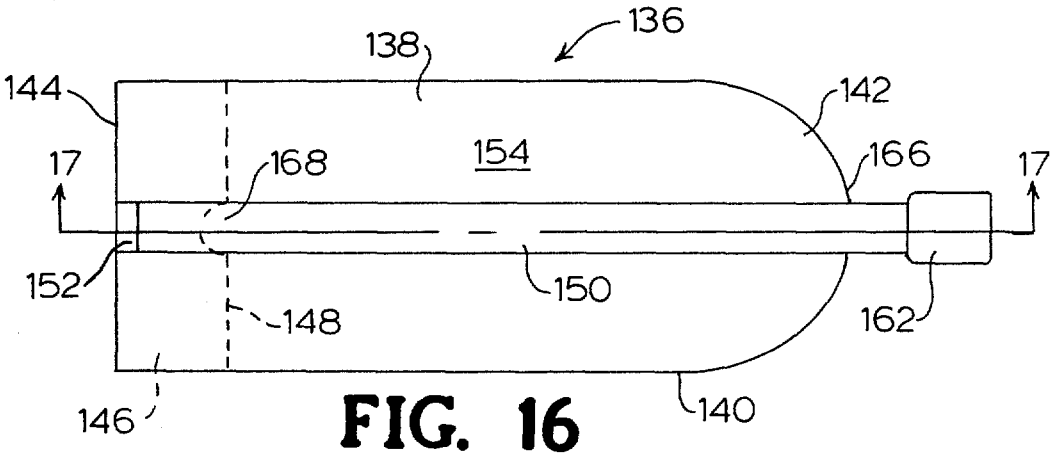

FIG. 16

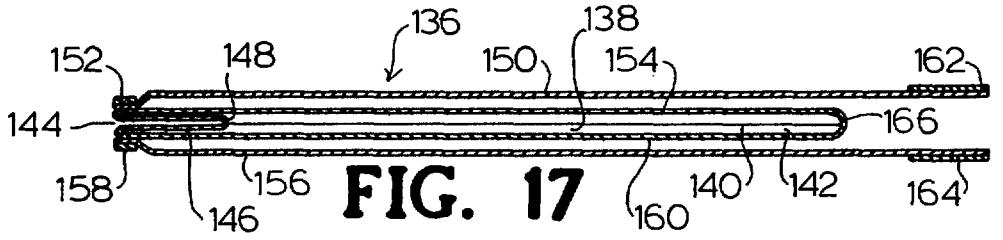

FIG. 17

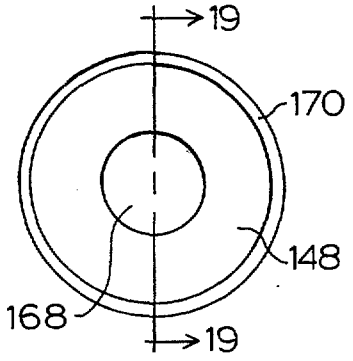

FIG. 18

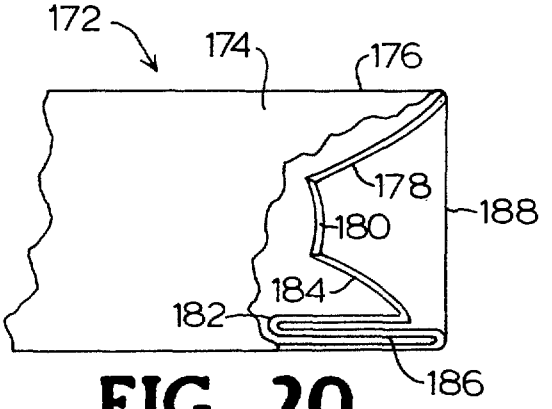

FIG. 20

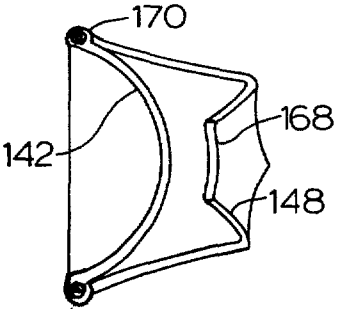

FIG. 19

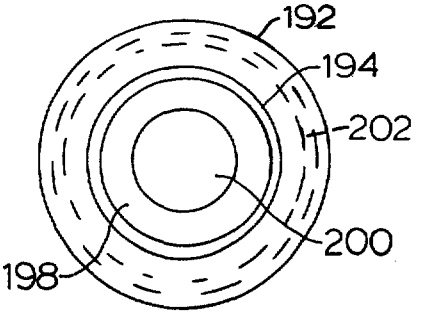

FIG. 21

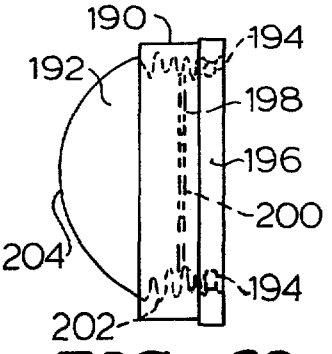

FIG. 22

110

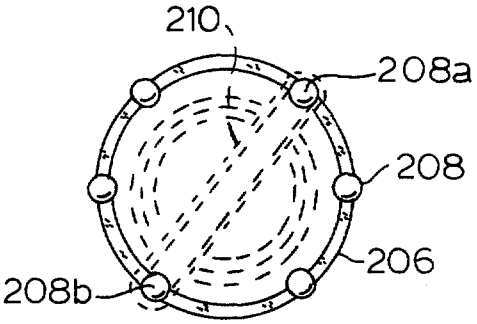

FIG. 23

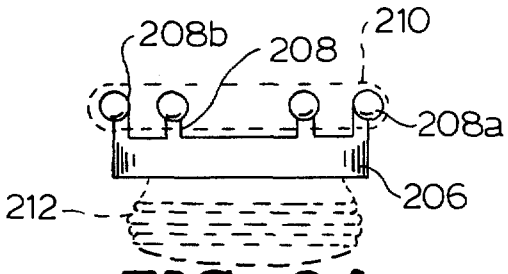

FIG. 24

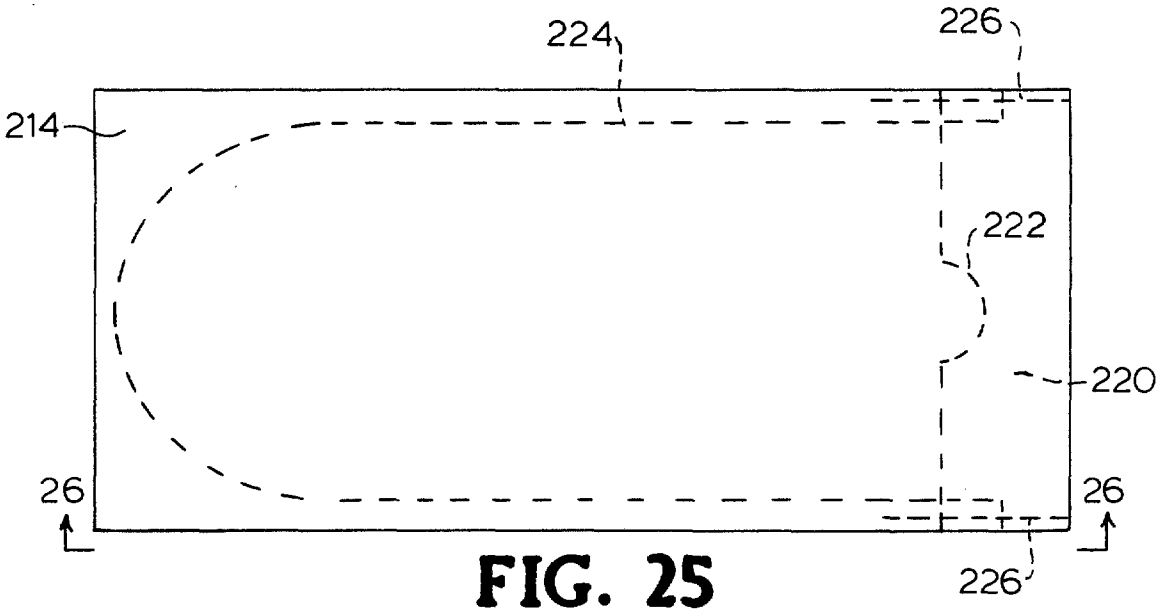

FIG. 25

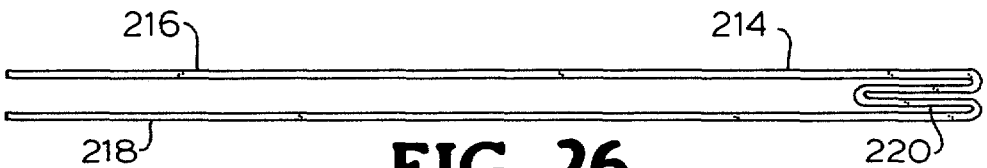

FIG. 26

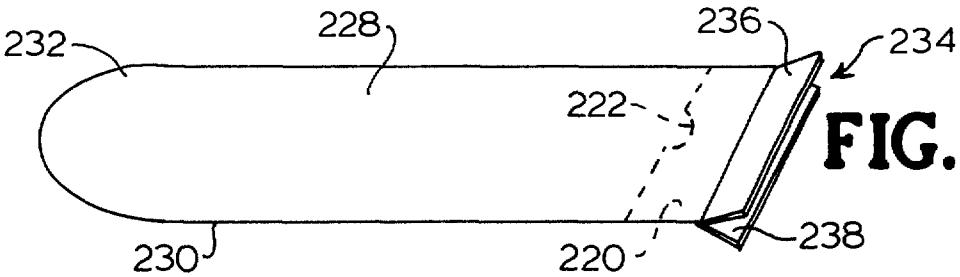

FIG. 27

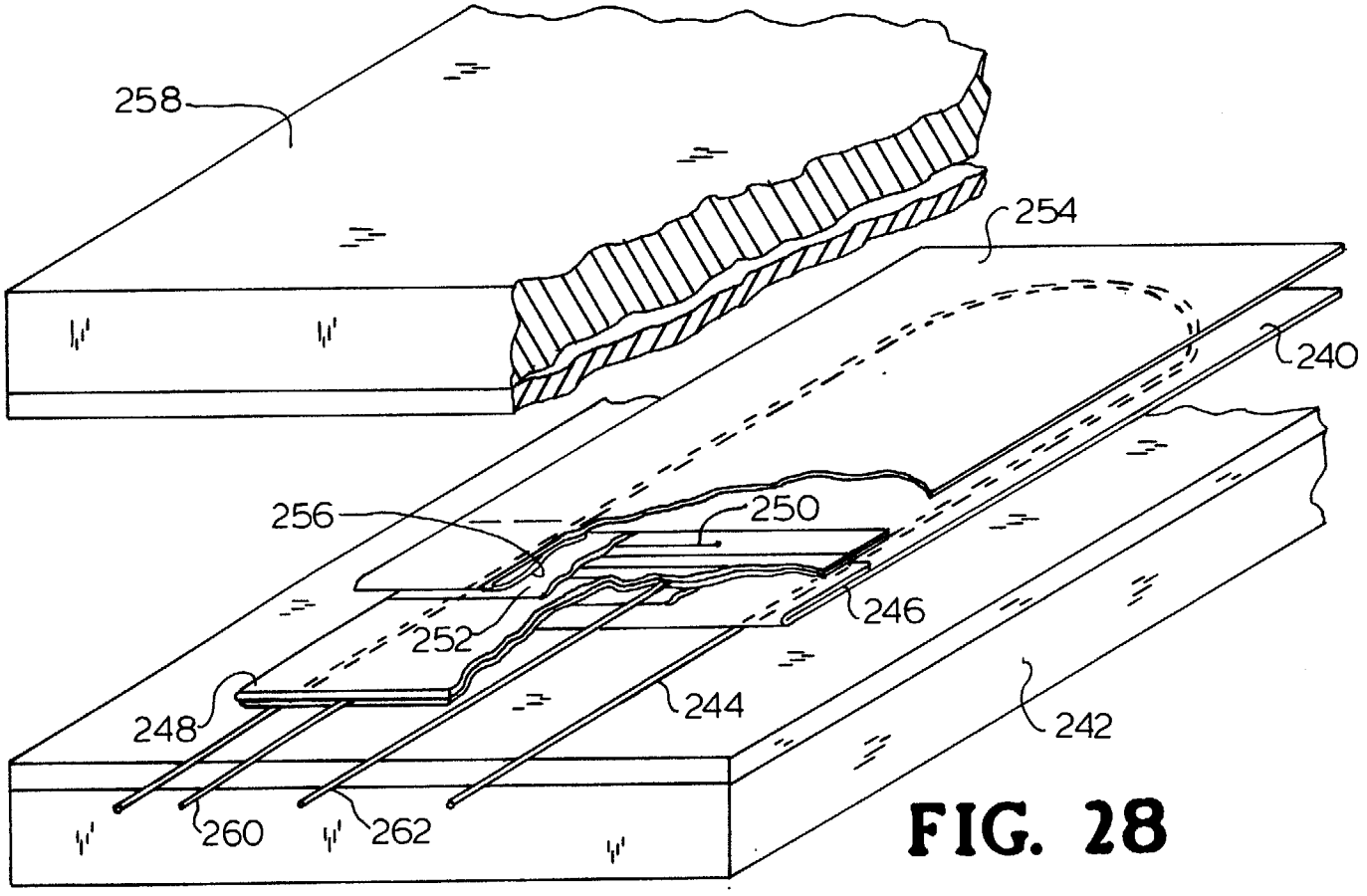

FIG. 28

12

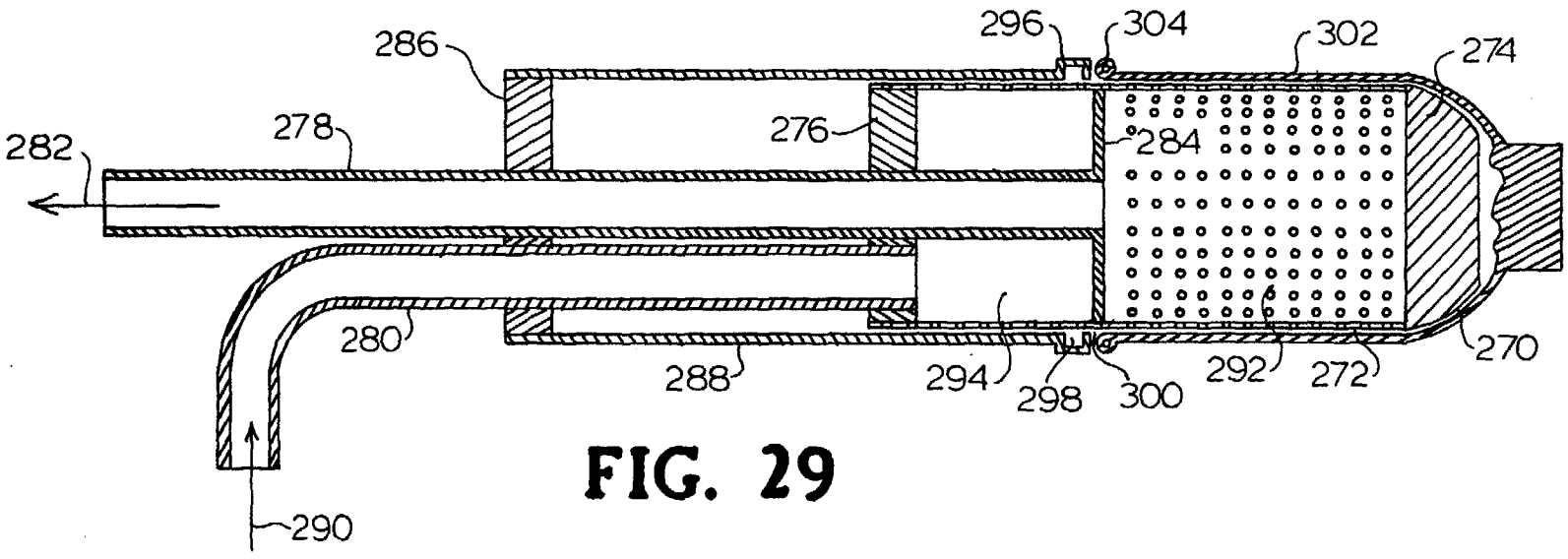
286
296
304
302
274
282
278
276
284
280
288
294
298
300
292
272
270
290

FIG. 29

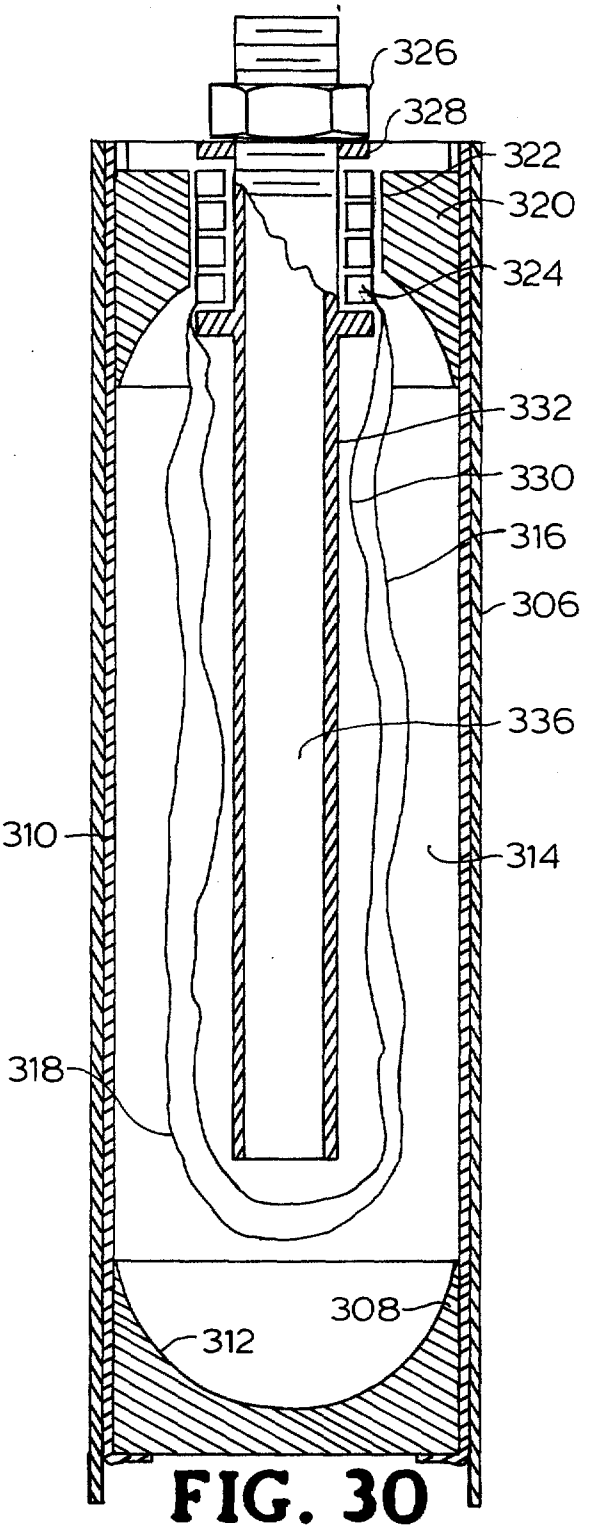
326
328
322
320
324
332
330
316
306
336
310
314
318
308
312

FIG. 30

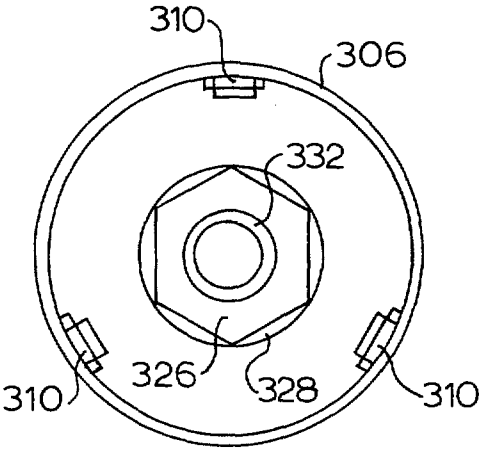
310
306
332
326
328
310
310

FIG. 31

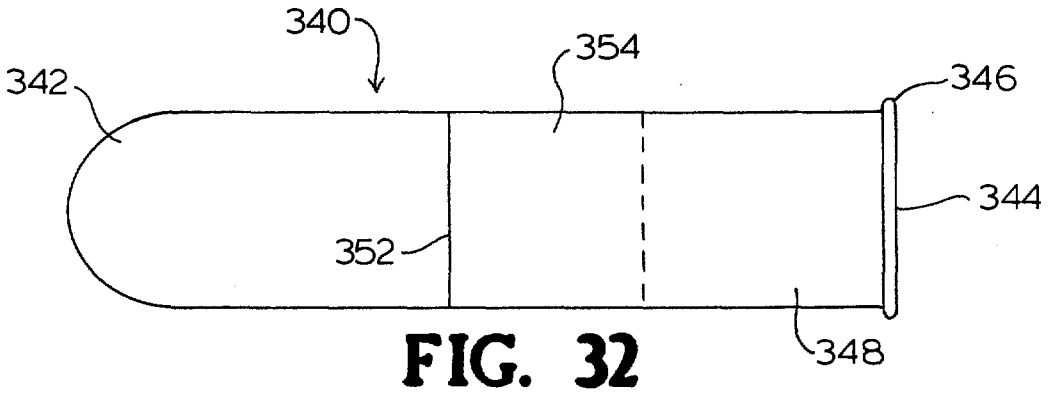

FIG. 32

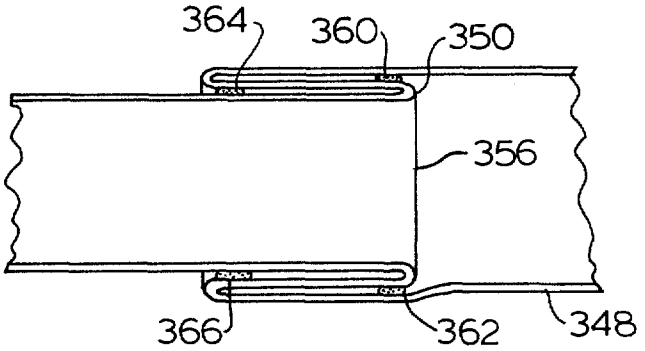

FIG. 33

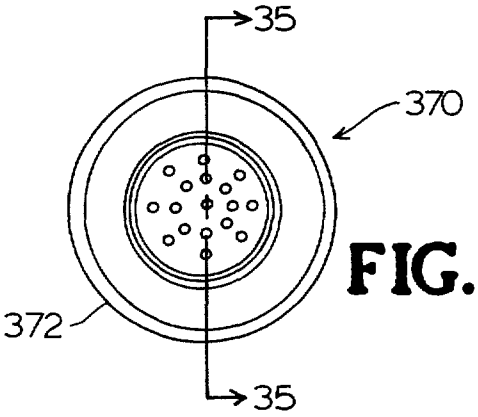

FIG. 34

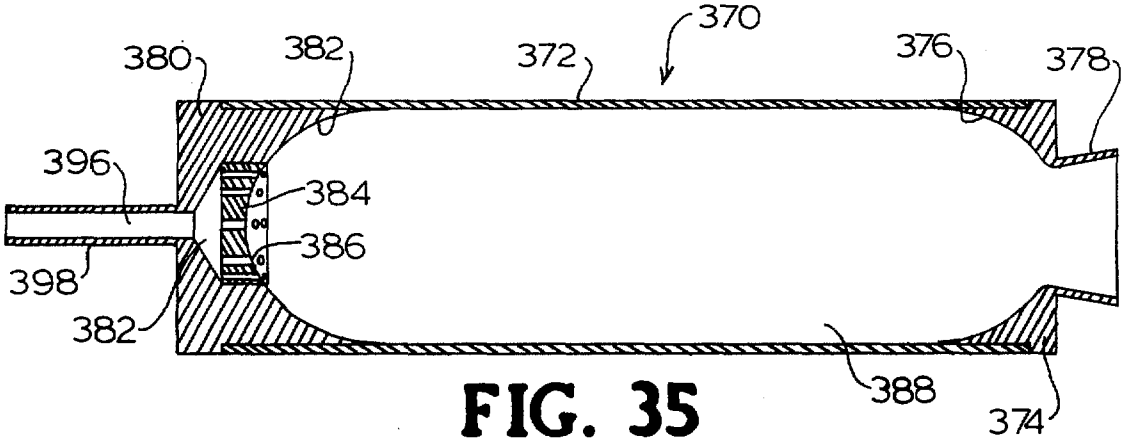

FIG. 35

115

FAU1 5014P

CONDOM ARTICLE AND METHOD OF MAKING THE SAME

Field of the Invention

The present invention relates to a condom article and method for making the same.

Description of the Art

In recent years, there has been a significant increase in the incidence and spread of sexually transmitted diseases, and this phenomenon has in turn caused an increased use of condoms as a prophylatic measure to reduce the risk of infection and transmission of such diseases.

Among the reasons for the increase in incidence and rate of transmission of sexually transmitted diseases (STD's) are the development of increasingly antibiotic-resistant strains of disease-causing organisms, e.g., those responsible for diseases such as syphillis and gonorrhea. Another factor has been the absence of any effective cure for acquired immunodeficiency syndrome (AIDS).

Recent disclosures by the Centers for Disease Control (Washington and Atlanta), and reports at the Third International AIDS Conference in Washington, D.C. in June, 1987, have focused international attention on the proliferation of acquired immunedeficiency syndrome (AIDS) in the general population, beyond the originally defined high-risk classification groups of homosexuals, bisexuals, intravenous drug users, and Haitain/African groups.

The diseases with which AIDS has been or is suspected to be linked include Pneumocystis carinii pneumonia, Kaposi's

116

sarcoma, esophageal or bronchopulmonary candidiasis, extra-pulmonary cryptococcosis, cytomegalovirus internal organ infection, disseminated Mycobacterium avium complex or M. kansasii infection, chronic herpes simplex ulceration, chronic cryptosporidiosis enteritis, toxoplasmosis of the brain, high-grade B-cell non-Hodgkin's lymphoma, disseminated histoplasmosis, chronic isosporiasis enteritis, and lymphoid interstitial pneumonia in children.

In a recent San Franciso cohort study reported in "AIDS: The Cost in Health and Lives," Selik, M. D. Richard M., et al, The Internist, April, 1987, p.p. 6 et seq., there was found to be, for every case of AIDS in the group studied, nine cases of other HIV-related morbidity. As also indicated in this article, cohort follow-up studies indicate that the proportion of HIV-infected persons who will ultimately develop AIDS ranges from 25% to 50% or more depending on the length of follow-up and the patient's clinical status at the beginning of the study. Mathematical modeling of this trend in reported AIDS cases has led to a projection that the cummulative total of AIDS cases will be 270,000 by 1991, and the number reported that year alone will be 74,000.

Against the foregoing background, and the recognition that condoms afford a safe, low cost, and generally reliable means for combating the spread of STD's, including AIDS, there has been an increased demand for condoms in developed, as well as developing countries, where some governments are distributing condoms to their citizens at no charge, to minimize the spread of STD's. As a result of the mass distribution of condom products, there is a need in the industry for the development of low cost, storage-stable condoms which are readily and simply produced in mass quantities, by methods and apparatus entailing low capital investment requirements.

Currently, most condoms are produced from a latex resin via a dipping process in which a cylindrical and rounded-end mold is dipped into a resin bath, so that the mold is coated with a thin layer of the latex material. The thickness of the latex coating on the mold is dependent on the viscosity of the latex, and the speed of extracting the mold from the latex bath. Similar latex dipping processes have been employed with suitably shaped molds to form tight-fitting gloves such as surgical gloves.

The above-described latex resin dipping process has been utilized for decades, and yields a generally satisfactory barrier product at reasonable cost.

With the recent spread of AIDS in the general population and the resurgence of condom usage in sexual activities, there has been interest in improving the strength and reliability characteristics of condoms, and of achieving improvements in manufacturing processes and economics, to further combat the spread of STD's generally, and AIDS specifically, as well as to provide a safe and reliable contraceptive means.

U.S. patent 4,576,156 issued March 18, 1986 to Manfred F. Dyke discloses a condom formed of a thermoplastic polyurethane material, having a generally cylindrical configuration with an open proximal end and a closed distal end. The disclosed condom has a thickness of from about 0.01 millimeters, or less, to about 0.25 millimeters. The thermoplastic polyurethane employed to form the condom is disclosed as having: an average Shore A hardness of from about 50 to about 90; a tensile stress, at 100% of elongation, between about 300 and 1,000 psi; and a tensile stress, at 300% elongation, between about 800 and 3,000 psi. Suitable thermoplastic polyurethane

species for manufacturing the condom include those set out at column 2, line 55 to column 3, line 10 of the Dyke patent, with polyether- or polyester- based urethane elastomers said to be preferred. In the manufacture of the thermoplastic polyurethane condom disclosed in the Dyke patent, a film of the polyurethane material, e.g., in the form of a 6-inch square, is heated to a temperature high enough to soften the polymer but low enough to avoid chemical degradation, preferably in a clamping frame, and at a temperature of about 400-500°F. The heated film then is brought into contact with a preformed mandril to cause the film to assume the shape of the mandril, preferably with application of a vacuum to the system in order to bring about uniformity in wall thickness (column 3, lines 47-50 of the patent).

In an illustrative example described at column 4, lines 22-38 of the Dyke patent, an extruded film of Pellethane® X5036-80AA polyurethane (The UpJohn Company, Kalamazoo, Michigan) is clamped on a clamping frame and heated at 460°F for 180-200 seconds, following which vacuum is drawn on the film and the mandril moved downward into the film. Vacuum is shut off as the mandril moves into the film, then is applied at the base of the mandril after it has moved down into the film completely, such vacuum causing the film to pull down tightly and assume the shape of the mandril. After 30-100 seconds of vacuum forming in this manner, the vacuum is released, excess material at the base is cut off, and the film is partly rolled up onto itself for a distance of about 3 inches, on the 10-inch mandril, and then is dusted with powder and rolled up until it is removeable from the mandril.

Although the Dyke patent describes the condom product as having substantially uniform wall thickness, it will be recognized

that the deformation of the thermoplastic polyurethane sheet with the heated mandril will inherently cause stretching and localized stresses and thinning, which in turn will cause non-uniformity of thickness over the entire areal extent of the condom article. Further, the nature of the deformation process using the preheated mandril is such that localized thermal stresses and temperature gradients will be developed, which may significantly adversely affect the strength and use characteristics of the condom product. In addition, the cutoff of excess material at the base of the mandril following the forming operation will result in significant wasteage of material and/or the necessity to rework such material in the process system. Finally, the use of small units of the polyurethane film, such as the 6-inch squares disclosed in the patent, entails significant disadvantages in terms of materials handling and the processing of the film stock, and may also entail significant material wasteage and/or reworking of material.

European patent application 0 147 072 published July 3, 1985 in the names of Robert A. Taller, et al, discloses a process for making a polyurethane condom with a uniform thickness of from about 1.5 to about 4 mils. A heat cured polyurethane prepolymer solvent solution is employed into which a mold is dipped and withdrawn for heat curing on the mold. The polyurethane prepolymer which is employed in the dipping medium is a prepolymer which is the reaction product of a polyisocyanate with at least one long chain polyol. The polyol is amorphous at room temperature, has an average molecular weight of from about 500 to about 5,000, a hydroxy number of from 225 to about 22.4, and a NCO/OH ratio of from about 0.95:1 to about 1.1:1.

The above-described process suffers the deficiencies inherent in all resin bath dipping methods for forming condoms, including slow processing times on a unit product basis, so that many dipping systems must be provided and concurrently operated to achieve high volume production.

For example, the European application states at page 7, line 18, that the condom mold may be dipped into and withdrawn from the polyurethane solution at a rate of about 16 to about 90 centimeters per minute; lines 25-27 at the same page of this application indicate that the dwell time of the condom form in the polyurethane prepolymer solution is on the order of from about 20 to about 70 seconds.

Once the mold is withdrawn from the solution, the polyurethane film deposited on the dipped form is air dried and then cured at elevated temperature, e.g., between about 130°C and about 175°C, for about 20 to about 40 minutes, as disclosed at page 7, lines 33-35 of the application.

The polyurethanes employed in the process of the European patent application are segmented block copolymers constituted by alternating sequences of hard rigid segments and soft, flexible segments, in which the hard segment and the degree of crosslinking are balanced within the ranges of approximately 14-25 percent hard segment and approximately 5,000-30,000 molecular weight per cross link. The application states that the polyurethane polymers employed in the disclosed process provide a Shore A durometer hardness of about 35 to 60. Page 10, lines 19-22 of the application state that representative polyurethane polymers comprise from about 13% to about 23% isocyanate, from about 70% to about 84% long chain diol, and from about 0.75% to about 6% of a crosslinker.

A further disadvantage of the process of this European application is that the polyurethane prepolymer is utilized in

solvent solution. Methylene chloride is disclosed as particularly convenient in such usage. The patent application discloses at page 15, lines 35-38 that the resin solution is maintained at a temperature between about 15° and about 25°C to control viscosity and help prevent evaporation of the volatile solvent. Accordingly, the resin solution and the condom forms must be maintained at a low temperature to minimize loss of volatile solvent from the dip coating system.

It is accordingly an object of the present invention to provide an improved condom which is readily, simply, and inexpensively formed.

It is another object of the invention to provide a method for forming a condom of such type, which facilitates mass production of the condom.

Other objects and advantages of the present invention will be more fully apparent from the ensuing disclosure and appended claims.

SUMMARY OF THE INVENTION

The present invention relates to a novel condom comprising a tubular main sheath portion, closed at a distal end and open at a proximal end thereof.

Such condom be for example be formed of a thermoplastic elastomeric material or a suitable polymeric non-elastomeric material, and may advantageously be made by a process including blown film formation of the tubular main sheath portion.

In one preferred aspect, the present invention relates to a condom comprising a blown film tubular main sheath portion formed of a polyurethane material, e.g., a polyester-based

polyurethane, having a specific gravity of from about 1.15 to about 1.25, a Shore A hardness of from about 80 to 95, a break tensile stress of from about 4500 to about 6,000 psi, a tensile stress at 50% elongation of from about 720 to about 2400 psi, an ultimate elongation of from about 450% to about 600%, a flexural modulus of from about 4,000 to about 37,000 psi, and a tear strength of from about 500 to about 1,000 pli.

In another preferred aspect, the present invention relates to a condom comprising a blown film tubular main sheath portion formed of a multiblock rubber-based copolymer material, e.g., a multiblock rubber-based copolymer material having a Shore A hardness from about 25 to about 100, a tensile strength of from about 500 to about 4500, a 300% modulus of from about 120 to about 1,000 psi, and an ultimate elongation of from about 200 to about 1400%.

In still another aspect, the present invention relates to a method of making a condom, comprising the steps of:

(a) blow forming a tubular film of a thermoplastic material; and

(b) sealing one end of said tubular film.

The blow forming step in the method described in the preceding paragraph may comprise blow extrusion forming, or alternatively blow molding, of the tubular film article.

Other aspects and features of the invention will be more fully apparent from the ensuing disclosure and appended claims.

BRIEF DESCRIPTION OF THE DRAWINGS

Figure 1 is a partial sectional, elevational view of an illustrative condom according to one embodiment of the present invention.

Figure 2 is a partial sectional, elevational view of an illustrative condom according to another embodiment of the present invention.

DETAILED DESCRIPTION OF THE INVENTION, AND PREFERRED EMBODIMENTS THEREOF

The condom article of the present invention is of a general type having a tubular main sheath portion, closed at a distal end and open at a proximal end thereof.

Illustrative condom articles of such type are shown in Figures 1 and 2 hereof.

With reference to Figure 1, there is shown a condom 10 comprising a tubular main sheath portion 12. The condom has an open proximal end 14, which as shown, may be circumferentially bounded by retaining ring 16. The condom is closed at its distal end 18.

Figure 2 shows a condom of generally corresponding construction, wherein all elements analogous to those of the Figure 1 condom are identified by corresponding reference numerals to which 100 has been added. The Figure 2 condom differs from that shown in Figure 1, however, by the addition of a distal tip reservoir 122 at the distal end 118 of the condom, for retention of ejaculate during use of the condom.

124

The condom of the present invention may advantageously be formed by blow forming the tubular main sheath portion of the condom from a suitable thermoplastic material. As used herein, the term "blow forming" is intended to be broadly construed to include (1) blow extrusion forming, in which a tubular film of a thermoplastic material is extruded and a pressurized fluid introduced in its interior, typically an air "bubble," whose pressure and flow rate determines the dimensional characteristics of the blown tubular film, and (2) blow molding, in which a tube of heated thermoplastic material is passed into an enclosing mold where a pressurized gas inside the tubular film expands the film into contact with the interior surfaces of the mold.

Irrespective of the specific type of blow formation technique empolyed to form the tubular main sheath portion of the condom article of the invention, the diameter of the tubular main sheath portion should be of a size commensurate with its intended use as a barrier means overfitting a male penis.

The condom articles of the invention may be of generally cylindrical shape, as in the illustrative embodiments of Figures 1 and 2 described hereinabove. Alternatively, it may be suitable in some instances to utilize the condom of the present invention in the form of a baggy-type penile enclosure which is wrapped about the penis for use, and retained in relatively looser configuration on the penis than are the condom articles shown in Figures 1 and 2, which are of a type closely overfitting the penis, and rolled or pulled onto the penis for use.

125

Thus, the specific structure of the condom article of the present invention may be widely varied, depending on the mode of application intended, and the specific materials of construction employed.

The materials useful for forming the condom articles of the present invention may variously include thermoplastic materials such as elastomeric thermoplastic materials, as well as non-elastomeric materials such as olefinic homopolymers and copolymers, e.g., ultra-low density polyethylene.

As used herein, the term "elastomeric" in reference to thermoplastic materials useful for forming condom articles in accordance with the present invention, means a material which subsequent to elongation thereof under an applied tensional force, regains at least a significant portion of its original dimensional characteristics when the applied tensional force is released.

Illustrative of thermoplastic elastomeric materials which may find utility in the broad practice of the present invention are: polyurethane materials, as for example the polyester-based polyurethane material commercially available from Mobay Corporation (Plastics and Rubber Division, Pittsburgh, Pennsylvania) under the trademark Texin®; polyester elastomers, such as the block copolymers of polybutylene terephthalate and long-chain polyether glycols, which are available commercially from E. I. Du Pont de Nemours and Company, Inc. (Polymer Products Department, Engineering Polymers Division, Wilmington, Delaware) under the trademark HYTREL®; polyether blockamides, such as those commercially available from Atochem, Inc. (Glennrock, New Jersey) under the trademark Pebax®; multiblock rubber-based

126

copolymers, particuarly those in which the rubber block component is based on butadiene, isoprene, or ethylene/butylene, such as the multiblock rubber-based copolymers commercially available from Shell Chemical Company (Houston, Texas) under the trademark Kraton®; ethylene-octene copolymers such as those commercially avaiable from The Dow Chemical Company (Midland, Michigan) under the trademark ATTANE™; as well as any other suitable homopolymers and copolymers, and mixtures, alloys, and composites thereof.

Among the foregoing materials, polyester-based polyurethanes, and multiblock rubber-based copolymers are most particularly preferred.

The composition of multiblock rubber-based copolymers employed as materials of construction for the condom articles of the present invention may be varied widely, it being understood that the non-rubber repeating units of the copolymer may be derived from any suitable monomer(s), as for example, (meth)acrylate esters, such as methyl methacrylate, cyclohexylmethacrylate, etc.; vinyl arylenes, such as styrene; etc.

In general, the non-rubber blocks in the multiblock rubber-based copolymer preferably are derived from monomer(s) which are non-elastomeric in character, so that "soft" rubber blocks and "hard" non-elastomeric blocks are provided in the multblock copolymer. Such hard blocks may suitably be derived from monomers having a glass transition temperature (T_g) of at least about 50°C, with styrene being generally preferred. The rubber block of such multiblock copolymers may be formed of repeating units derived from synthetic rubbers such as butadiene, isoprene, ethylene/butylene, etc., with butadiene and ethylene/butylene elastomeric blocks generally being preferred.

127

The most preferred multiblock rubber-based copolymers are those having an A-B-A structure comprising polystyrene endblocks and an elastomeric midblock.

Illustrative multiblock butadiene-based copolymers which may be usefully employed in the broad practice of the present invention include those variously described in U.S. Patent Nos. 3,297,793; 3,595,942; 3,402,159; 3,842,029; and 3,694,523, the disclosures of which hereby are incorporated by reference herein. Various multiblock butadiene-styrene copolymers may be usefully employed to form the condom of the present invention, such as the aforementioned triblock ethylene-butadiene-styrene copolymers commercially available under the trademark Kraton™ from Shell Chemical Company (Houston, Texas) and small block butadiene-styrene copolymers commercialized by Firestone Synthetic Rubber & Latex Company (Akron, Ohio) under the trademark Stereon®.

In the general use of a multiblock rubber-based copolymer as the material of construction for the condom article of the present invention, the copolymer material preferably is characterized by the following physical properties: a Shore A hardness of from about 25 to about 100; a tensile strength of from about 500 to about 4500; a 300% modulus of from about 120 to about 1,000 psi; and an ultimate elongation of from about 200 to about 1400%.

With reference to the use of polyurethanes as materials of construction for the condom of the present invention, preferred material characteristics include: a specific gravity of from about 1.15 to about 1.25, a Shore A hardness from about 80 to about 95, a break tensile stress from about 4500 to about 6,000 psi; a tensile stress at 50% elongation of

128

from about 720 to about 2400 psi, an ultimate elongation of from about 450% to about 600%, a flexural modulus of from about 4,000 to about 37,000 psi, and a tear strength of from about 500 to about 1,000 pli.

It will be recognized that processing conditions and apparatus may be varied widely in blow forming the tubular main sheath portions of condoms in accordance with the present invention, depending on the specific thermoplastic material employed in the blow forming operation, the volumetric space requirements of the process system, the method and apparatus employed for closure of the distal end of the tubular main sheath portion to form the finished condom structure, etc. The choice of specific processing conditions, materials, and the like may readily be determined for a given product application without undue experimentation, by those skilled in the art.

In blow extrusion forming of the main sheath portion of the condom, by way of example, the temperatures over a three-zone extruder may illustratively range from about 300° to about 380° Fahrenheit for a polyester-based polyurethane material or a multiblock butadiene-based styrene copolymer, while the temperature range in the same extruder for an ultra low density ethylene-octene copolymer or a polyether block amide may range from about 400° to about 450°F; associated therewith are blow pressures which may range from 1 to 12 ounces per square inch of blown film, depending on the specific material employed.

When blow extrusion is utilized as the method for blow forming the tubular main sheath portion of the condom, the resulting tubular article has two open ends, and one of such

open ends is sealingly closed to form the final condom article. The end closure operation may be carried out in any suitable manner, and preferably is automated so as to accommodate high speed manufacture of the condom article in high volume. Thus, the tubular body formed by blow extrusion may concurrently be sealed and severed at regular intervals along its length, to accommodate continuous processing.

The closure of the blow extruded tubular main sheath portion preferably is carried out by heat sealing, as is advantageous from the standpoint of thermoplastic materials being employed to form the condom.

The specific method of closure will depend largely on the specific material of construction employed for the tubular sheath portion of the condom, as well as its thickness. The wall thickness of the condom article may vary widely, but preferably is on the order of from about 0.05 to about 0.25 millimeter.

With such low thicknesses, it is important that the sealing method not produce differential stresses or other material deficiencies in the tubular main sheath in the vicinity of the distal end seal. Accordingly, when heat sealing is employed as a closure technique for forming the enclosed distal end of the condom, thermal impulse heat sealing is highly preferred, since it can initiate the sealing process at low temperature, with the material to be sealed thereafter quickly rising to the desired high sealing temperature, and then quickly returning to ambient temperature. Thus, rapid sealing of a localized region is effected, in a manner which prevents nearby regions of the film being sealed from experiencing substantial temperature changes, such as might otherwise result in undesirable change of material properties in the vicinity of the seal. This

consideration is particularly important in thinner films, e.g., with material thicknesses on the order of 0.05 millimeter, or lower, up to approximately 0.1 millimeter.

Thus, in a continuous process blow extrusion system, wherein the blown film tube is continuously formed into discrete condom articles, the sealing method may be combined with, or otherwise effect, severing of the film into discrete tubular segments for the desired product articles. For example, it may be possible to utilize an ultrasonic sealing assembly comprising an ultrasonic horn having associated therewith a blade element as an integral part of the horn structure, which in combination with a mating anvil effects concurrent or substantially contemporaneous severing of the tubular film into discrete sequential tubular segments and ultrasonic bonding of distal ends thereof to form condom articles.

Alternatively, it may be desirable to sever the tubular blow extruded film to form discrete open-ended tubular main sheath portions, followed by a separate distal end sealing operation.

As discussed hereinabove, the condom articles of the present invention may be formed in various configurations, including tubular cylindrical-type configurations, as well as "baggy"-type configurations, the choice of a specific configuration depending on the particular materials of construction and the intended packaging, storage, and use environments of the condom.

In the tubular cylindrical configuration of the condom illustratively shown in Figures 1 and 2 hereof, a reinforcing ring is provided at the periphery of the opening at the proximal end of the condom. The purpose of such reinforcing ring is to provide a manually grippable region for application

and removal of the condom to the penis for use, as well as to provide a structure facilitating rolling of the condom when the condom is to be provided to the end user in rolled form, and, to the extent that the reinforcement ring is an elastic and resilient element, to assist in the retention of the condom on the penis of a wearer and to prevent the leakage of seminal fluids from the condom during and subsequent to coital activity.

It will be recognized that in lieu of the reinforcement ring illustratively described, there may be provided at the distal end of the condom any of a variety of other attachment, securement, or retention means, including tapes, adhesive-bearing surfaces, strings or straps attached to the distal end of the condom, etc.

While the condom of the present invention may be devoid of any such proximal attachment, securement, and/or retention means, it generally is preferred in practice to utilize a reinforcement ring at the condom proximal end.

Several approaches may be employed to form such a reinforcing ring at the proximal end of the condom. For example, the sheath material at the open proximal end of the condom may be rolled onto itself, and then tacked in place employing, e.g., a thermal weld or an elastomeric adhesive. Alternatively, the sheath material at the open proximal end of the condom may be rolled onto a ring of a different material from that employed to form the sheath portion of the condom, or it may be rolled onto a ring of the same material, followed by securement of the rolled length of condom to the ring structure. Still another approach is to roll the open end of the condom onto a narrow section of a second piece of the tubular film material, of the same material of construction as the main sheath portion of the condom. It will be appreciated that all such rolling

techniques must be carefully controlled during the manufacturing process, to avoid excessive wrinkling of the sheath material at the proximal end, such as otherwise may cause distortion of or undesired reduction in the diametral extent of the proximal opening of the condom.

A still further approach to forming a reinforced proximal opening for the condom article, is simply to fold the open end material back onto the exterior surface of the sheath portion, in the vicinity of the proximal opening. For example, an untacked single fold approximately 0.25 inch wide may be employed.

As discussed hereinabove, condom articles of the present invention are suitably produced by blow forming, i.e., blow molding or blow extrusion forming.

In blow molding, an extruded parison tube of heated thermoplastic is introduced between respective halves of an open split mold, and then expanded against the sides of the closed mold via fluid pressure, typically a volume of interiorly provided air. The mold then is opened and the tubular part ejected. This method is generally economical for and amenable to high volume manufacturing of one piece hollow articles, which may vary considerably in complexity of shape. Blow molding generally requires close attention to and control of processing conditions to obtain highly uniform wall thicknesses in the molded article.

Blow extrusion forming typically involves feeding of a thermoplastic or thermosettable molding compound from a hopper to a screw and barrel, where the molding compound is heated to a plastic state and then urged forwardly, typically by a rotating screw, through a nozzle of a selected cross-sectional configuration. An air bubble is introduced into the interior

of the tubular extruded film, and the pressure of such air bubble is employed to control the diametral and film thickness characteristics of the tubular extrudate.

An illustrative blow molding apparatus which may be usefully employed to produce condom articles of the present invention is a Esta blow-molding machine, HS 361 or HS 451, commercially available from Staehle Maschinenbau GmbH, Leinfelden-Echterdingen, Federal Republic of Germany.

Although it may be desirable in some applications of the present invention to utilize thermosetting materials of construction for the condom article, it generally is preferred to utilize thermoplastic materials, most preferably thermoplastic elastomeric materials, although, as indicated, non-elastomeric polymeric materials such as ultra-low density polyethylene or other non-elastomeric homopolymeric or copolymeric films may be advantageously utilized.

When thermoplastic materials are employed to form the tubular main sheath portion of the condom article, and blow extrusion forming is employed, heat sealing methods of closing the distal end of the tubular article to form the condom of the invention are preferred, although any other suitable closure techniques appropriate to the specific materials of construction employed may advantageously be used. When blow molding is employed as the forming method for the condom, no such distal end closure will typically be necessary, since the mold characteristically will be fabricated to form the condom as a unitary, i.e., single piece, product article, having a distal end integrally enclosing the tubular main sheath portion of the condom.

Depending on the specific materials of construction employed, it may be particularly advantageous in some instances to utilize blow extrusion to form the tubular main sheath portion of the condom, due to the ability of blow extrusion to impart biaxial orientation to the formed tubular film. It will be recognized that the specific blow forming techniques which may be usefully employed for a given application may be widely varied, depending on the materials of construction, type of condom configuration desired, processing rates employed, etc.

The features and advantages of the present invention are more fully shown with respect to the following illustrative examples, which, however, are not to be limitingly construed as regards the nature and practice of the present invention.

EXAMPLE I

Based on initial materials selection criteria including tensile strength, elongation, hardness, and flexural modulus, the materials identified in Table I below were selected for testing as materials of construction for condom articles of the present invention. Set out in Table I are the generic types and commercial tradenames of the materials selected, together with their appertaining physical property values for tensile strength, elongation, 300% modulus, Shore A hardness, specific gravity and melt temperature (where applicable).

TABLE I

Sample	Material	Tensile Strength, psi	Elongation, percent	Modulus 300%, psi	Hardness, Shore A	Specific Gravity	Melt Temp., F
1	Styrene-Butadiene-Styrene Block Copolymer (Kraton D-2104, Shell Chemical Company)	1700	880	200	43	0.93	--
2	Styrene-Ethylene/Butylene-Styrene Block Copolymer (Kraton G-2701, Shell Chemical Company)	1600	800	480	67	0.90	--
3	Styrene-Ethylene/Butylene-Styrene Block Copolymer (Kraton G-2706, Shell Chemical Company)	850	950	130	28	0.90	--
4	Styrene-Ethylene/Butylene-Block Copolymer (KTR-27-G, Shell Chemical Company)	--	--	--	--	--	--
5	Dispersion of Polypropylene in EPDM Rubber (Santoprene 201-64, Monsanto Company)	1000	400	--	64	0.97	380
6	Olefinic Thermoplastic Elastomer (Telcar 81-D-954A, Teknor Apex)	560	740	--	45	1.18	425
7	Polybutylene Terephthalate/ Polyether Glycol Block Copolymer, Polyester Elastomer (Hytrel 3548, E. I. du Pont de Nemours & Company, Inc.)	--	--	--	D35	1.15	370

TABLE I (CONTINUED)

Sample	Material	Tensile Strength, psi	Elongation, percent	Modulus 300%, psi	Hardness, Shore A	Specific Gravity	Melt Temp., F
8	Polyester Block Amide (Pebax 3533-SN-00, Atochem)	--	--	--	D35	1.01	--
9	Polyether Block Amide (Pebax 4011-MA-00, Atochem)	--	--	--	--	--	--
10	Urethane Thermoplastic Elastomer (P3429, J. K. Quinn Co.)	--	--	--	--	--	--
11	Olefinic Thermoplastic Elastomer (ETA-3131E, Republic Chemical Co.)	3000	550	--	D70	0.91	--
12	Olefinic Thermoplastic Elastomer (ETA-4010, Republic Chemical Co.)	1250	500	--	87	0.91	--
13	Olefinic Thermoplastic Elastomer (ETA-5081, Republic Chemical Co.)	3300	650	--	D60	0.90	--
14	Urethane Thermoplastic Elastomer (Texin 480-A, Mobay Corporation)	6000	500	1700	85	1.20	395
15	Urethane Thermoplastic Elastomer (Texin DP7-1014, Mobay Corporation)	6000	675	1000	83	1.12	--

The foregoing materials identified in Table I were evaluated for suitability to blow extrusion processing. Crude tubes formed by blow extrusion of these samples then were qualitatively evaluated with respect to their processability and compatibility with the blow extrusion technique.

The blow extrusion apparatus employed in this evaluation was a laboratory-sized unit manufactured by C. W. Brabender Instruments, Inc., (South Hackensack, New Jersey) including a Model 3003 extruder and a Model BFW-100 take-off tower. The extruder had a 0.75 inch diameter screw and a 30:1 length to diameter ratio, with three heater zones. An add-on extruder die functioned as a fourth heater zone. The take-off tower effected pulling and conveying of the extruded tube in a vertical direction until it was sufficiently cooled. The top of the take-off tower comprised a set of rolls to collapse the contained air bubble and redirect the tube to a final take-up roll. The take-off tower also comprised controls for air pressure for internal tube pressurization, and controls for external tube cooling.

The extruder die employed for extruding thin, small diameter tubes in this initial qualitative evaluation, was a C. W. Brabender 0.5 inch diameter (outer ring diameter) heated die. An inner die, provided with the unit, measured 0.46 inch, thereby providing an annular gap of 0.02 inch, through which the molten polymer flowed and formed the tube. In initial blow extrusion trials, the formed tubular film was thicker than desired. To achieve a thinner product, the inner die was replaced by a die with a diameter of 0.48 inch, providing a gap of 0.01 inch, which produced desirable tube thicknesses, ranging from 0.0015 to 0.005 inch after blowing, depending on the specific material processed.

Results of the initial qualitative assessment of Samples 1-15 are set out in Table II below.

TABLE II

Sample	Processability[a]	Properties of Extruded Tube
1	fair	Soft, good elasticity, poor strength in machine direction,
2	fair	Limited elasticity
3	good	Soft, good elasticity, behaves similar to latex, tends to stick to itself
4	poor	Good elasticity, very thick wall, very difficult to get uniform thin bubble
5	good	Poor strength in both directions, limited elasticity,
6	poor	Moderate strength, limited elasticity
7	excellent	Good strength, limited elasticity tendency to stick to itself
8	good	Tough, reasonable elasticity, good strength, only slight tendency to stick to itself
9	excellent	Tough, much less elasticity than Sample 8 when dry, soaking in water to take advantage of hydrophilic nature of this polymer increased elasticity with little loss in strength
10	poor	Very tough, reasonable elasticity, sticks to itself strongly
11	poor	Very low elasticity, not soft, poor strength
12	fair	Tough, fair-poor strength, limited elasticity, tendency to stick to itself
13	poor	Very low elasticity, not soft, poor strength
14	good	Very tough, good strength, limited elasticity, slight tendency to stick to itself
15	fair	Very tough, limited elasticity,

139

Based on the results shown in Table II, Samples 3 and 4 (styrene-butadiene-styrene block copolymers), Sample 7 (polybutylene terephthalate/polyether glycol block copolymer), Samples 8 and 9 (polyether block amides), and Sample 14 (polyester-based polyurethane) exhibited the best processability/extruded tube properties of the various materials tested. Among the olefinic thermoplastic elastomeric materials tested, significant processing difficulty was encountered, and the resulting blown tubes exhibited generally insufficient elasticity and limited strength, relative to the other materials evaluated.

In addition to the tabulated materials whose processability and extruded tube properties are described in Table II, an ultra-low density polyethylene material (Sample 16; ATTANE™ 4003 ethylene-octene copolymer, commercially available from The Dow Chemical Company, Midland, Michigan) was evaluated. This polymeric material is not an elastomeric thermoplastic, however it was very easy to process via blow extrusion and produced tube samples in the desired range of diameter and thickness. This ultra-low density polyethylene was not as soft as some of the other materials, such as the styrene-butadiene-styrene block copolymer of Sample 3, and did not recover from high strain extensions, but was relatively extensible.

EXAMPLE II

On the basis of the results obtained in Example I, a further blow extrusion evaluation was carried out for Samples 3, 4, 7, 8, 9, 14, and 16, using refined operating parameters.

In contrast to the initial extrusion evaluation of Example I wherein the inner die had a diameter of 0.46 inch, the further extrusion tests employed an inner die having a diameter of 0.48 inch.

Of the aforementioned seven selected material samples (Samples 3, 4, 7, 8, 9, 14 and 16), Samples 4 and 8 were undesirably difficult to process in low film thicknesses. Specifically, Sample 4 did not stablize in a thin blown bubble, and Sample 8 exhibited an undesirable tendency to self-adhere, even with extended cooling. The remaining five samples, Samples 3, 7, 8, 9, 14 and 16, produced extruded tube diameters and film thicknesses which were much closer to the desired values.

Table III below provides a summary of processing conditions for the blow extrusion processing of these samples, together with the approximate thickness range, in inches, achieved for each of the blow extruded samples.

141

TABLE III

Sample	Extruder Temperature zone 1	zone 2	zone 3	zone 4	Extruder Speed, RPM	Blow Pressure, Oz/sq. in.	Cooling Pressure, psi	Approximate thickness range, inch
3	300	340	370	380	7	8	11	0.0050-0.0055
7	320	375	380	380	7	1 - 8	15	0.0030-0.0040
8	360	370	380	400	7	12	10	---
9	400	410	430	450	4	2	13	0.0025-0.0035
14	300	330	360	380	6	3	10	0.0015-0.0025
16	400	430	440	450	4	2	10	0.0020-0.0025

42

EXAMPLE III

In this test, blow extruded tubes produced in Example II were evaluted for heat sealing capability, utilizing heat sealing as a method for forming a closed distal end of the tube for condom usage. Extruded tubes of Samples 3, 7, 9, 14, and 16 were evaluated.

In a preliminary evaluation, a laboratory thermal impulse heat sealer, commercially available from Vertrod, Inc., was employed.

The impulse heat sealer is a potentially attractive means for forming enclosed distal ends on blow extruded tubes for condoms of the present invention, because it can initiate the sealing process at a low temperature, with the material to be sealed quickly rising to the desired elevated sealing temperature, and then returning quickly to ambient conditions. The resulting rapid sealng in a localized region prevents surrounding material in the vicinity of the seal from experiencing undesirable temperature changes such as may deleteriously alter material properties. Such localized heating character is particularly important in thin film sealing applications such as forming enclosed distal ends for blow extruded condoms of the present invention.

In application of the thermal impulse heat sealer to the aforementioned extruded tubes, Samples 14 and 16 were heat sealed effectively at moderate power levels, with the resulting heat seals being strong, effective, soft, and easily trimmed. Samples 3, 7, and 9, by contrast, were unable to be effectively sealed with the impulse heat sealer even at higher power levels and longer dwell times.

In a second phase of the sealing evaluation, a conventional melt heat seal was employed to form a closed end on the extruded tubes. A laboratory thermal heat sealer (Model 18 PR, commercially available from PAC), was modified to form by melt sealing a closed and rounded condom end, i.e., to provide a seal of a semicircular shape (in edge profile) rather than a straight strip. For this purpose, an aluminum heating platen was constructed having a concave hemispherical cavity for sealingly forming rounded ends on the extruded tubes. During heat sealing, the extruded tubes were placed in the hemispherical concave region of the platen and pressed against a hard rubber backup strip to form the seal.

Table IV below sets forth the heat sealing temperatures and dwell times employed for heat sealing each of the identified extruded tube samples.

TABLE IV

Sample	Temperature, F	Dwell Time, seconds
3	190	3
7	260	1
9	340	1
14	260	1
16	340	1

EXAMPLE IV

In this example, samples of the blown extruded films (Samples 3, 7, 9, 14, and 16) were tested to compare the properties of condoms according to the present invention to those of conventional latex rubber condoms.

144

The tests conducted were determinations of ultimate tensile strength, ultimate elongation, 100% modulus, and puncture resistance.

The ultimate tensile strength and ultimate elongation values were measured at material breaking points. The 100% modulus was the force required to stretch the condom to twice its original length.

The puncture resistance test simulated a fingernail and finger being pushed through a condom, and comprised a lower base unit which clamped and secured the condom film, providing a circular opening of 1 inch diameter within which the clamped film was exposed. A finger simulator probe was pushed through the base unit opening and into the film using an Instron test unit which monitored the probe travel and the force applied to the probe. The probe comprised a 0.5 inch diameter steel rod tapered at its end to a central wedge shape with a thickness of 0.025 inch, and rounded at its extremity to a radius of curvature of 0.25 inch. After the puncture tests were conducted and the load to puncture recorded, the data were normalized based on the thickness of each material sample. This resulted in final puncture data in units of force to puncture per unit thickness (pounds per inch).

From six to eight measurements were taken for each sample in determining the tensile strength, percent elongation, and 100% modulus values; from three to five measurements were taken for each sample to determine puncture resistance. Mean

measurement values were determined in each of the test procedures, for each sample tested, and the results are set out in Table V below.

The data for Samples 3, 7, 9, 14, and 16 are shown together with data for a control film of coventional latex condom material, for comparison purposes.

TABLE V

Sample	Sample Thickness, inches	Tensile Strength, psi	Percent Elongation	100% Modulus, psi	Load to Puncture lbs/inch
3	0.0055	811	1241	83	503
7	0.0048	1386	993	604	587
9	0.0032	434	204	415	207
14	0.0028	5193	863	772	1104
16	0.0021	1793	781	990	1253
Control	0.0030	1656	1163	123	928[a]

(a) 925 minimum level, likely to be higher

The polyester-based polyurethane film (Sample 14) provided the highest tensile strength at 5193 psi. The next highest tensile strength material was the ultra-low density polyethylene film (Sample 16) at 1800 psi and the conventional latex condom film (control) at 1665 psi. The lowest strength material was the polyester block amide material (Sample 9) at 434 psi; this material was tested after soaking it in water for a minimum of 24 hours to reduce its stiffness.

146

The conventional latex rubber material (control) and the styrene-butadiene-styrene block copolymer (Sample 3) showed comparable elongation characteristics (1163% for the control, and 1241% for Sample 3). The polyester block amide material (Sample 9) had the lowest elongation at 204%, while the remaining three materials exhibited between 800% and 1000% elongation.

The lowest, and most desirable, 100% modulus value was obtained with the styrene-butadiene-styrene block copolymer material (Sample 3) at 83 psi. The control had a 100% modulus value of 123 psi. The remaining materials required much higher stress levels to stretch them to twice their original length. The highest 100% modulus level was obtained for the ultra-low density polyethylene material (Sample 16) at 990 psi, and the polyester-based polyurethane (Sample 14) was also relatively high at 772 psi.

With regard to puncture resistance, the materials tested fell into two general classes. The ultra low density polyethylene (Sample 16), the polyester-based polyurethane (Sample 14) and the latex rubber material (control) required high loads to initiate a puncture. The remaining materials (Samples 3, 7, and 9) [Note: Sample 9 was tested wet in the puncture test], exhibited punctures at loads which were approximately one-half of the loads necessary to initiate puncture in the first-mentioned class of materials.

While the invention has been described with reference to particular examples and embodiments, it will be apparent that numerous variations, alternatives, and modifications are possible, and accordingly all such variations, alternatives, and modifications are to be regarded as being within the spirit and scope of the present invention.

THE CLAIMS

What Is Claimed Is:

1. A condom comprising a blow formed tubular main sheath portion, closed at a distal end thereof and open at a proximal end thereof.

2. A condom according to Claim 1, wherein the tubular main sheath portion is formed of a material selected from the group consisting of thermoplastic elastomeric materials and polymeric non-elastomeric materials.

3. A condom according to Claim 1, wherein the tubular main sheath portion is formed of a thermoplastic elastomeric material.

4. A condom according to Claim 3, wherein said thermoplastic elastomeric material is selected from the group consisting of: polyurethanes; polyether block amides; styrene-rubber-styrene block copolymers; and polyesters.

5. A condom according to Claim 1, wherein the tubular main sheath portion is formed of a block copolymer selected from the group consisting of: styrene-butadiene-styrene block copolymers; styrene-isoprene-styrene block copolymers; and styrene-ethylene/butylene-styrene block copolymers.

6. A condom according to Claim 1, wherein the tubular main sheath portion is formed of an ethylene-octene copolymer.

7. A condom according to Claim 1, wherein the tubular main sheath portion is formed of a polyester-based polyurethane.

8. A condom according to Claim 1, wherein the tubular main sheath portion is formed of a styrene-rubber-styrene block copolymer.

9. A condom according to Claim 1, wherein the tubular main sheath portion is formed of a polyester-based polyurethane material having a specific gravity of from about 1.15 to about 1.25, a Shore A hardness of from about 80 to about 95, a break tensile stress of from about 4,500 to about 6,000 psi, a tensile stress at 50% elongation of from about 720 to about 2,400 psi, an ultimate elongation of from about 450% to about 600%, a flexural modulus of from about 4,000 to about 37,000 psi, and a tear strength of from about 500 to about 1,000 pli.

10. A condom according to Claim 1, wherein the tubular main sheath portion is formed of a multiblock rubber-based copolymer having a Shore A hardness of from about 25 to about 100, a tensile strength of from about 500 to about 4,500, a 300% modulus of from about 120 to about 1,000 psi, and an ultimate elongation of from about 200% to about 1,400%.

11. A condom according to Claim 1, wherein the closed distal end is heat sealed.

12. A condom according to Claim 1, wherein the tubular main sheath portion is formed by blow extrusion.

13. A condom according to Claim 1, wherein the tubular main sheath portion is formed by blow molding.

14. A condom according to Claim 1, wherein the open proximal end is bounded by a reinforcement ring joined to the tubular main sheath portion.

15. A method of making a condom, comprising the steps of:

(a) blow forming a tubular film of a thermoplastic material; and

(b) sealing one end of said tubular film.

16. A method according to Claim 15, wherein said blow forming comprises blow extrusion.

17. A method according to Claim 15, wherein said blow forming comprises extrusion molding.

18. A method according to Claim 15, wherein said sealing comprises heat sealing.

19. A method according to Claim 15, wherein said thermoplastic material is selected from the group consisting of thermoplastic elastomeric materials and polymeric non-elastomeric materials.

20. A method according to Claim 15, wherein said thermoplastic material is selected from the group consisting of: polyurethanes; polyether block amides; styrene-rubber-styrene block copolymers; and polyesters.

21. A method according to Claim 15, wherein said thermoplastic material is a polyester-based polyurethane.

22. A method according to Claim 15, wherein said thermoplastic material is a styrene-rubber-styrene block copolymer.

150

ABSTRACT OF THE DISCLOSURE

A condom comprising a blow formed tubular main sheath portion is disclosed, and a method for making same. Blow extrusion and blow molding techniques of fabrication are described, together with the use of various thermoplastic materials of construction, including polyurethanes, polyether block amides, styrene-rubber-styrene block copolymers, ethylene-octene copolymers, and polyesters.

151

Best Mode for Carrying Out the Invention. The condom of the invention comprises a tubular main sheath portion, closed at a distral end and open at a proximal end thereof. Preferably, the condom is formed of a thermoplastic elastomeric, or a suitable polymeric non elastomeric, material including polyurethane and multiblock rubber-based copolymer materials, by a process including blown film formation of the tubular main sheath portion and sealing one end of the tubular portion.

Industrial Applicability. The invention provides an improved condom which is readily, simply and inexpensively formed. Using the process of blown film formation the condom way be mass produced. The condom thus may be used in a low cost manner to help combat the spread of sexually transmitted diseases, including AIDS and to provide a safe and realiable contraceptive means.

152

THE CLAIMS

What Is Claimed Is:

1. A condom comprising a blow formed tubular main sheath portion, closed at a distal end thereof and open at a proximal end thereof.

2. A condom according to Claim 1, wherein the tubular main sheath portion is formed of a material selected from the group consisting of thermoplastic elastomeric materials and polymeric non-elastomeric materials.

3. A condom according to Claim 1, wherein the tubular main sheath portion is formed of a thermoplastic elastomeric material.

4. A condom according to Claim 3, wherein said thermoplastic elastomeric material is selected from the group consisting of: polyurethanes; polyether block amides; styrene-rubber-styrene block copolymers; and polyesters.

5. A condom according to Claim 1, wherein the tubular main sheath portion is formed of a block copolymer selected from the group consisting of: styrene-butadiene-styrene block copolymers; styrene-isoprene-styrene block copolymers; and styrene-ethylene/butylene-styrene block copolymers.

6. A condom according to Claim 1, wherein the tubular main sheath portion is formed of an ethylene-octene copolymer.

7. A condom according to Claim 1, wherein the tubular main sheath portion is formed of a polyester-based polyurethane.

8. A condom according to Claim 1, wherein the tubular main sheath portion is formed of a styrene-rubber-styrene block copolymer.

9. A condom according to Claim 1, wherein the tubular main sheath portion is formed of a polyester-based polyurethane material having a specific gravity of from about 1.15 to about 1.25, a Shore A hardness of from about 80 to about 95, a break tensile stress of from about 4,500 to about 6,000 psi, a tensile stress at 50% elongation of from about 720 to about 2,400 psi, an ultimate elongation of from about 450% to about 600%, a flexural modulus of from about 4,000 to about 37,000 psi, and a tear strength of from about 500 to about 1,000 pli.

10. A condom according to Claim 1, wherein the tubular main sheath portion is formed of a multiblock rubber-based copolymer having a Shore A hardness of from about 25 to about 100, a tensile strength of from about 500 to about 4,500, a 300% modulus of from about 120 to about 1,000 psi, and an ultimate elongation of from about 200% to about 1,400%.

11. A condom according to Claim 1, wherein the closed distal end is heat sealed.

12. A condom according to Claim 1, wherein the tubular main sheath portion is formed by blow extrusion.

13. A condom according to Claim 1, wherein the tubular main sheath portion is formed by blow molding.

14. A condom according to Claim 1, wherein the open proximal end is bounded by a reinforcement ring joined to the tubular main sheath portion.

15. A method of making a condom, comprising the steps of:

(a) blow forming a tubular film of a thermoplastic material; and

(b) sealing one end of said tubular film.

16. A method according to Claim 15, wherein said blow forming comprises blow extrusion.

17. A method according to Claim 15, wherein said blow forming comprises extrusion molding.

18. A method according to Claim 15, wherein said sealing comprises heat sealing.

19. A method according to Claim 15, wherein said thermoplastic material is selected from the group consisting of thermoplastic elastomeric materials and polymeric non-elastomeric materials.

20. A method according to Claim 15, wherein said thermoplastic material is selected from the group consisting of: polyurethanes; polyether block amides; styrene-rubber-styrene block copolymers; and polyesters.

21. A method according to Claim 15, wherein said thermoplastic material is a polyester-based polyurethane.

22. A method according to Claim 15, wherein said thermoplastic material is a styrene-rubber-styrene block copolymer.

ABSTRACT OF THE DISCLOSURE

A condom comprising a blow formed tubular main sheath portion is disclosed, and a method for making same. Blow extrusion and blow molding techniques of fabrication are described, together with the use of various thermoplastic materials of construction, including polyurethanes, polyether block amides, styrene-rubber-styrene block copolymers, ethylene-octene copolymers, and polyesters.

156

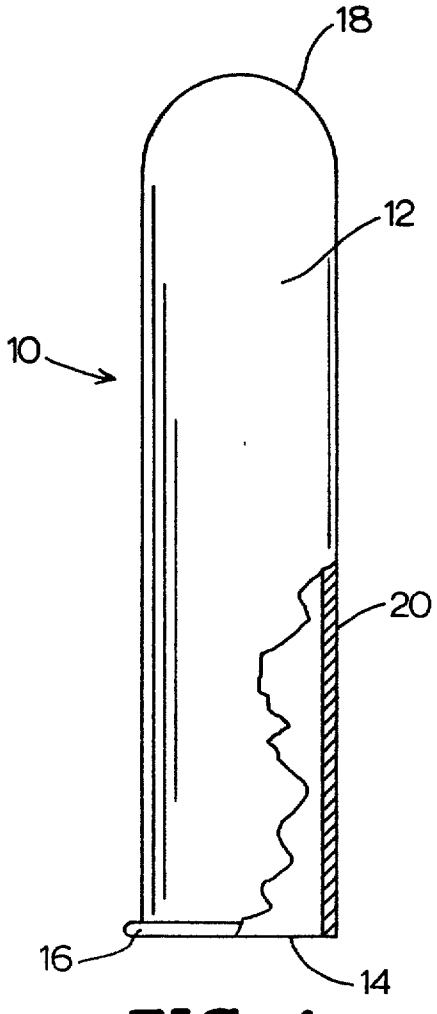

FIG. 1

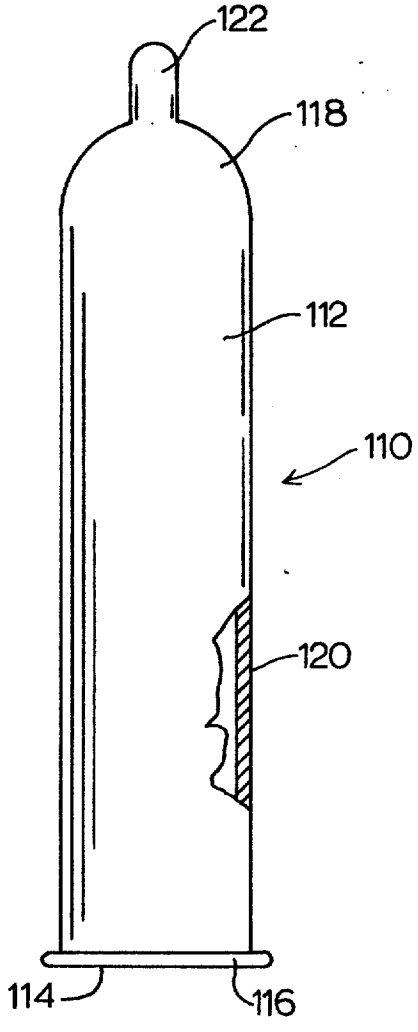

FIG. 2

APPENDIX C

FAMILY HEALTH INTERNATIONAL

FAHI 5008P

MEMORANDUM

TO: Steven Hultquist

FROM:. Charles Tanquary

DATE: August 23, 1988

SUBJECT: Portable Tensile Tester

Mr. Brad Pugh, who is VP, R&D/QA, of Ansell Inc., has expressed interest in licensing FHI's technology relating to portable tensile testing machines. He stated that Ansell would be willing to take over our design efforts and proceed into manufacturing and marketing. Ansell is interested in adding the machine to their present line, which consists of portable instruments (each fitting into a large metal case) for carrying out the water test (ASTM D3492) and the air burst test (ISO 4074/7) on condoms. While condoms would be their initial target, Brad anticipates, as I would, that there would be a vast demand for portable tensile testers in many industries, where on-site inspection is being carried out by governmental agencies, insurance carriers, insurance adjusters, appraisers, law firms, manufacturers, distributors, buyers, import/export firms, consumer activist groups, etc., etc., with focus on plastics, films, fibers, fabrics, adhesives, coatings, sealants, gaskets, etc., etc.

Ansell is currently selling the portable machine for the water test on condoms at a price of $3,000. The one for the air burst will be offered soon at $5,000 or $6,000. Brad said that Ansell would probably charge $10,000 for the tensile tester (although it would cost only a few hundred dollars to manufacture). When I expressed surprise that he would price it so high, he said (rightfully so) that the price would be based on what they can get, which depends little on actual costs. The alternative is to buy a standard tensile testing machine for at least $15,000 and perhaps as much as $30,000 to $50,000, but losing portability.

When he asked what we would require in royalties, I said 5% of sales (on the spur of the moment, without thinking it through), which would be $500 per machine. He was happy with this figure (so I may have mispoken). He believes that there would be a market for 1,000 machines over the coming several years. Perhaps we can live with $500,000 in royalties.

Now for the background. Carrying out the standard ASTM tensile test for condoms would be practically impossible with a portable machine because of the high extensibility of a ring specimen. With a condom that is 52 mm in diameter, an elongation at break of 800 to 900% would represent a jaw separation of 468 to 520 mm (about two feet). Allowing space for the rest of the machine (fixed bed and travelling head) would add another foot or so, requiring 3 or 4 feet in all. In addition, one would have to provide space in the case for dies and hammer to cut ring specimens, and also a firm platform (wooden block) to hold the condoms for cutting. When all of these factors are taken into consideration, the machine becomes large, bulky, and heavy.

My concept is simply to use zero gauge length, and test the whole condom. Practically speaking, one cannot really achieve zero separation, even when the jaws touch each other. There may be one-tenth inch of space. But even a 900% elongation of one-tenth inch is only 1 inch. By using the whole condom, we avoid cutting specimens, and introducing nicks or other imperfections. We can drive the machine easily by batteries, and record the stress vs. distance of jaw separation. All we need is a micrometer to measure the total thickness of the condom and a ruler to measure its width. We can plug these dimensions into our machine (using microcircuitry) and read out directly the stress in pounds per square inch, kilograms per square centimeter, or mega-Pascals. Since work is the product of force times distance, we can obtain readings of the work to break, together with the breaking force (or stress). What we cannot do is measure the elongation at break, or the modulus at various elongations, since such numbers are meaningless for "zero" gauge length. If such information is required, we would have to use a measurable length, perhaps one centimeter or less.

This is the concept I presented to Brad, and the one he became very enthusiastic about.

I would appreciate your checking into patentability. To me, the concept seems obvious, and yet no one has considered it before, despite the needs. Since the idea originated with me, I would be the sole inventor of any patents evolving from this.

cc Potts
Schellstede
Rivera
Wheeler
Witte

FAMILY HEALTH INTERNATIONAL FAHI 5009P

RECEIVED
AUG 24 1988
OLIVE & OLIVE
Attorneys at Law

MEMORANDUM

TO: Steven Hultquist

FROM: Charles Tanquary

DATE: August 23, 1988

SUBJECT: Dyeing of Synthetic Condoms
Thermoplastic Polyurethanes as New Art Forms

Several weeks ago, Dr. Potts inquired as to whether it would be possible with the new synthetic condoms to pigment or dye them to achieve a variety of colors, in order to increase their appeal to various potential users. I stated that I was sure I could dye them, based on my experience in dyeing various fibers and in handpainting various fabrics. (My wife is a fashion designer who developed a business in "one-of-a-kind" apparel using handpainted fabrics--silk, cotton, rayon, wool, etc.--which I manufactured for her.)

Knowing the properties of the thermoplastic polyurethanes, I presumed that the logical choice of dyes would be the disperse dyes, which offer outstanding brilliance, a broad range of colors, and excellent washfastness and lightfastness. Other possibilities were the dyes (leuco bases) which react in situ to form insoluble dyes, and the vats, which aggregate to form microcrystalline domains.

Not having a collection of any of these dyes in my laboratory (kitchen), I was forced to buy Rit dyes, which are sold in supermarkets and drug stores for dyeing clothes (in a large pot, or in the home washing machine). A Rit dye is a mixture of an acid dye (for nylon and wool), a direct dye (for cotton and rayon), and a disperse dye (for acetate and polyester), of the same color, for union dyeing of blends, such as polyester/cotton, or nylon/cotton. The Rit dye also contains dispersing additives and a surfactant. I bought a range of these, in liquid form, and tried them out with Texin 480-A (a polyester-based polyurethane), Ellastolan 1185A (a polyether-based polyurethane), and Kraton KTR-27-G (a styrene-polyolefin). All were easily dyed, and I obtained a broad range of colors by using the dyes individually and also in mixtures (red and yellow to obtain orange, blue and yellow to obtain green or lime, blue and red to obtain violets and purple, red and brown or black to obtain wine and burgundy, etc). The only problem I encountered was in "soaping-off" the dyed materials, to remove excess dye. The extraction process was laborious, because the direct and acid dyes were not fast, and had to be extracted by repeatedly washing and soaping (at the boil), until nothing further could be removed.

161

Seeing the results, Dr. Potts inquired whether one could obtain a multicolored condom, with red, white, and blue stripes, or plaid, or perhaps something resembling a tiger skin or leopard (which he thought would offer appeal in Africa).

It was obvious to me, from my experience in handpainting, that what one would need would be a dye solution that could be applied by hand or by printing. I decided that I would try the "Dry Erase Markers," which are used for writing on white ceramic boards ("wipe-off" boards), and also "Vis-a-Vis" markers, which are used for writing on plastic films for overhead transparencies. I believe that both of these "inks" employ disperse dyes. I found that they colored the TPE films well and were permanent: they could be washed in hot water, or boiled in soapy water, without loss of dye. Using these, I was able to provide Dr. Potts with something resembling a tiger skin, within my artistic limitations.

What I discovered further was that the thermoplastic elastomer films were a unique resource for artistic efforts. The films could be painted with these transparent colors much as one would apply water colors, and they could also be painted with opaque colors, such as the "Speedball Painters Opaque Paint Markers," to obtain effects resembling oil painting. There subsequently ensued a great variety of efforts to explore the artistic possibilities. Among these were the painting of films followed by stretching them over various forms, and printing on the films, followed by inflation.

A number of applications became apparent. One would employ the TPE tubing for balloon banners. An example would be using tubing that has been dyed blue or pink and printed with birth greetings (Congratulations on the Birth of Your Baby Boy, for example). Such printing can be carried out in a gift shop to customize the messages. The tubing can then be inflated with air or helium, and strung across a room. In fact, the tubing can be supplied as a long roll, so that the length of the balloon banner can be very long, much longer than anything now possible with rubber latex balloons. I have shown that the material can be printed with a dot matrix printer and inflated. Color graphics would also be simple, using laser printers. One item which could prove popular would be a balloon which is printed with a person's photograph (like the computer-generated pictures that one can obtain in many shopping malls). Such an item could be taken to a party and then inflated to life size, or larger.

We would like to have broad patent coverage if possible, so that we can pursue these tangential interests as well as the more immediate objective of coloring condoms. I plan next to contact several manufacturers of disperse dyes and request a broad range of samples for further tests. These will include fluorescent and photoluminescent dyes, which glow in the dark.

The technical literature from the resin manufacturers (BASF, Mobay, and Shell) lists pigmented resins (black and white, for example) but offers no indications that these resins or the products fabricated from them can be dyed or printed. What I have done must thus not be obvious. Since the efforts which led to these materials were my own, I would be the sole inventor of any patents covering the products and processes.

cc Potts
Schellstede
Rivera
Wheeler
Witte

IND

Medical Development

file in
FAHI 5012 P

RECEIVED
SEP 19 1988
OLIVE & OLIVE
Attorneys at Law

Mr. Steven J. Hultquist
Olive & Olive, P. A.
Post Office Box 2049
Durham, North Carolina 27702

Sept. 14, 1988

Dear Steven:

Enclosed you will find a document on a new idea that I had regarding donning of the present prototype condom. I have sent this to you with hopes that it may be a patentable concept. I am also sending the document to the other FHI Advanced Condom Project members as well.

I am uncertain as to your understanding with FHI and Charles Tanquary, hence I leave it to you to either begin investigation or obtain approval first. In any case please feel free to contact me to clarify the document or if I may be of assistance in any other way.

Sincerely yours,

W. Carl Coleman

W. Carl Coleman

861 South Poplar Place
Seattle, WA 98144
206 375.0715

164

M+IND
MEMORANDUM
9-14-88

TO: Charles Tanquary
Steven Hultquist
Bill Schellstede
Robin Foldesy
Roberto Rivera
Linda Potter
Bob Wheeler
Dave Moeller

FROM: Carl Coleman

RE: Hemispherical Dimpling to Reduce Force Required to Don Condom.

BACKGROUND

One of the possible concerns of the existing prototype condom is that it may be difficult or uncomfortable to don for larger diameter penis sizes. This is because the Entry Hole, to be small enough for smaller sizes, requires considerable expansion to accommodate the larger diameters. Anything that reduces the force required to radially expand the hole (Donning Force) will allow a greater range of penis diameters to be accommodated by one condom size.

EXPERIMENT

In an attempt to reduce the Donning Force (D.F.), I cut holes into the material around the entry hole. I found that this reduced the amount of force required to affect the radial expansion. However, these additional holes were unacceptable because they would allow leakage. Accordingly I deformed the plastic film into hemispherical cavities (dimples) in place of the holes. This reduced the amount of film that had to be stretched, but maintained the continuity of the film. As hoped this reduced the Donning Force. See Figures A, B, C, and D.

MECHANICS

Donning Force was measured by pushing a 1.8 inch diameter Delrin ball ended rod through the 5/8 inch Entry Hole. The Entry Hole was cut into either Texin or Elastollan film. The film was clamped into a carrier to stabilize the outer edges of the film. Two layers of material were used to improve the signal and reduce noise from the J.J. Loyd M03K Universal Test Machine with 10 kN load cell.

165

Sample Configurations

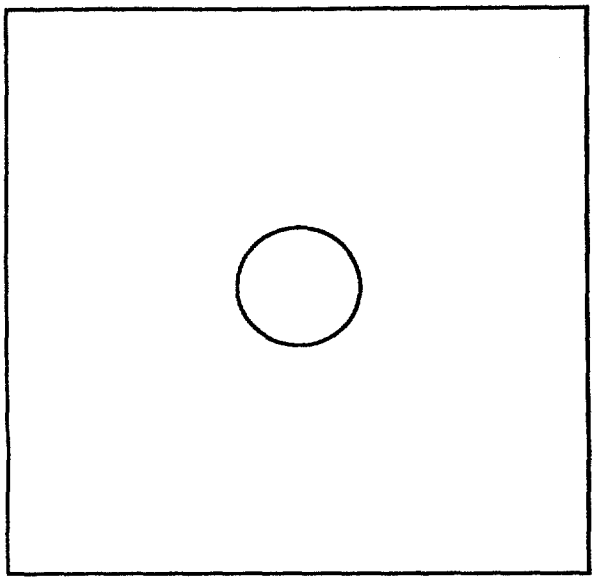

Fig. A) TEXIN OR ELASTOLLAN
5/8 Entry Hole

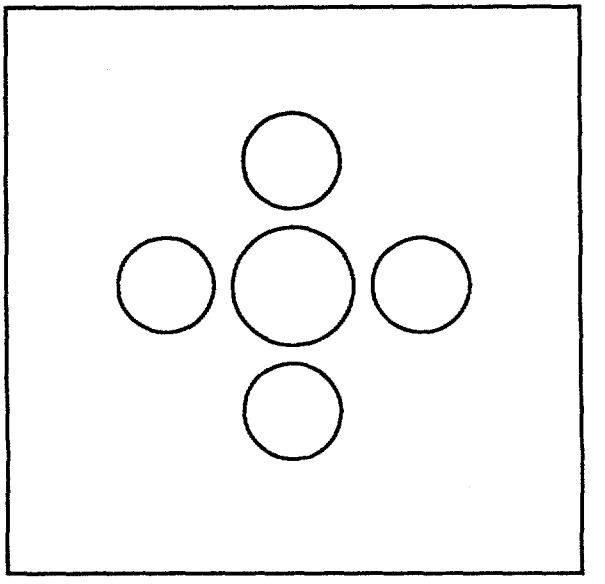

Fig. B) ELASTOLLAN + 4 HOLES
5/8 Entry Hole
1/2 Relief Holes (4 places)
3/32 Spacing from Entry Hole

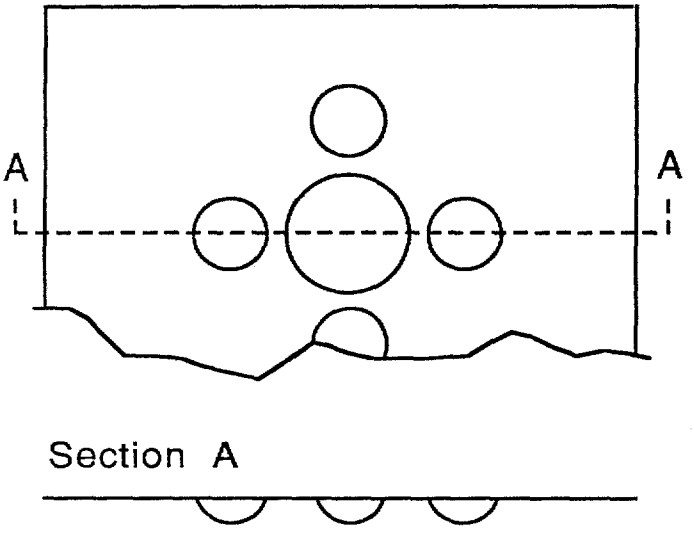

Fig. C) ELASTOLLAN + 4 DIMPLES
5/8 Entry Hole
3/8 Dimples (4 places)
3/32 Spacing from Entry Hole

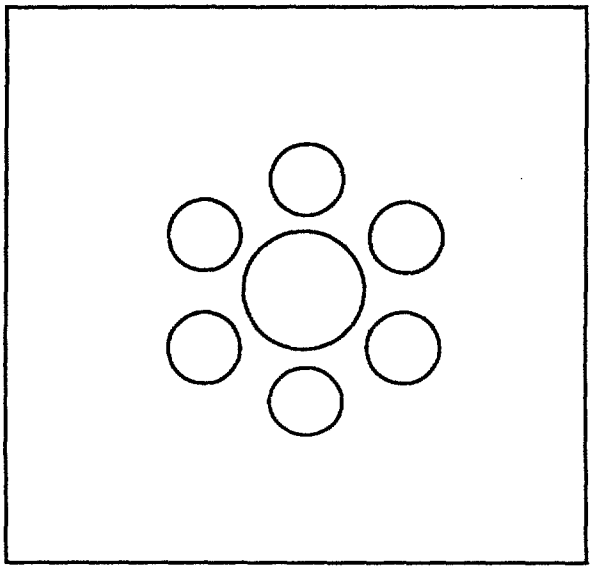

Fig. D) ELASTOLLAN + 6 DIMPLES
5/8 Entry Hole
3/8 Dimples (6 places)
3/32 Spacing from Entry Hole

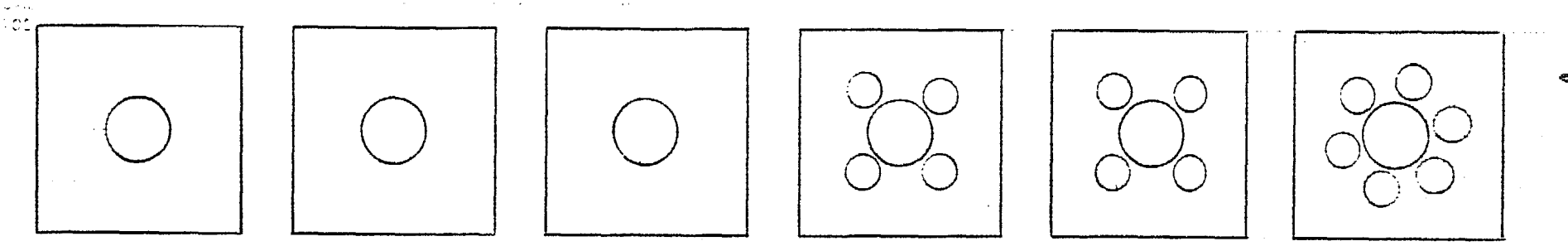

LATEX | TEXIN | ELASTOLLAN | " + 4 HOLES | " + 4 DIMPLES | " + 6 DIMPLES

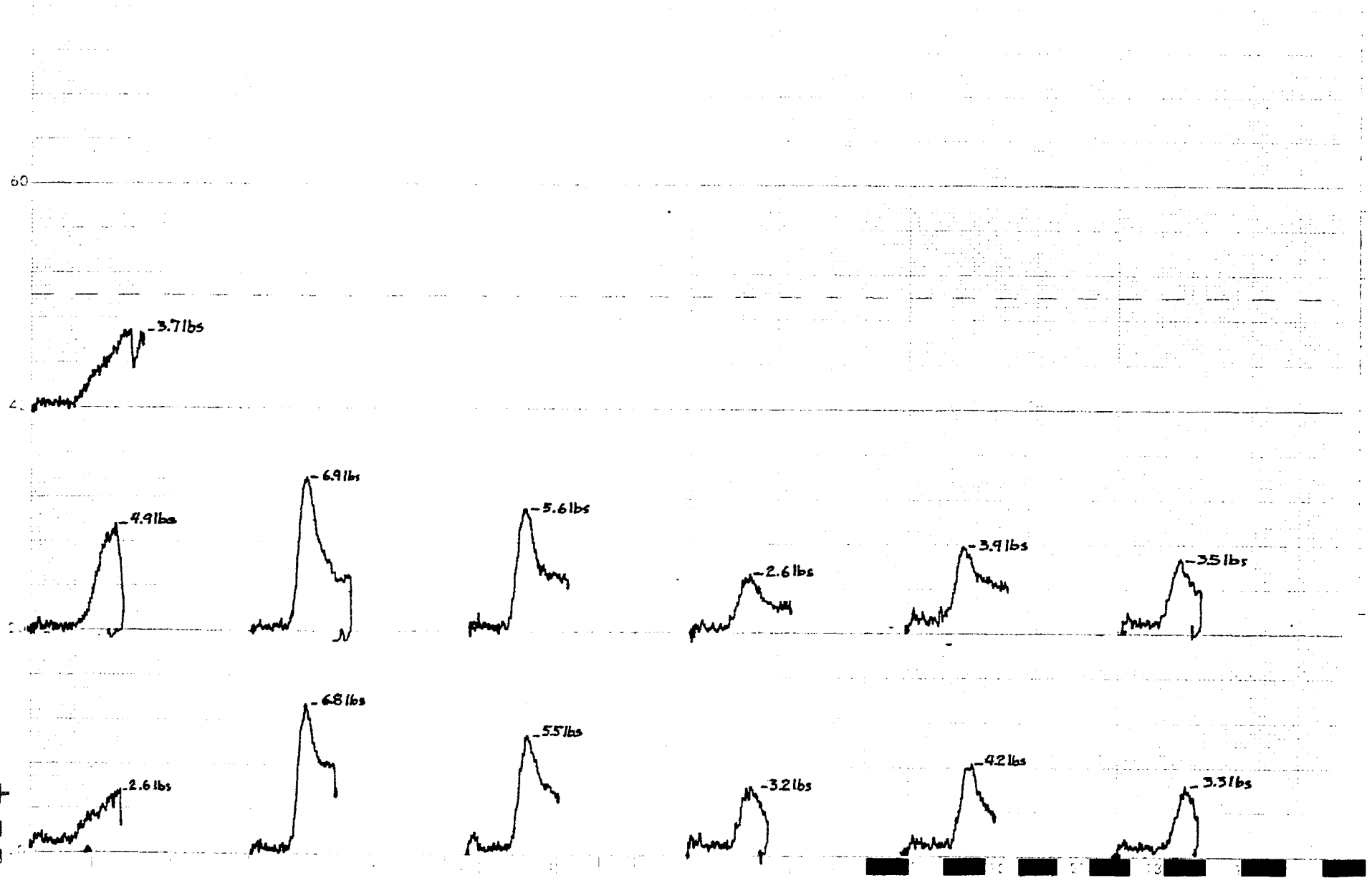

RESULTS

Data from Figure E shows that the Donning Force for Elastollan can be reduced by more than one third by dimpling. Using Elastollan with dimpling instead of undimpled Texin can reduce the D.F. by half.

	Tex.	Elas.	B	C	D
Pounds of Donning Force	3.4	2.75	1.45	2.0	1.7
% of Elastollan Baseline	N/A	100%	53%	72%	61%
% of Texin Baseline	100%	80%	42%	58%	50%

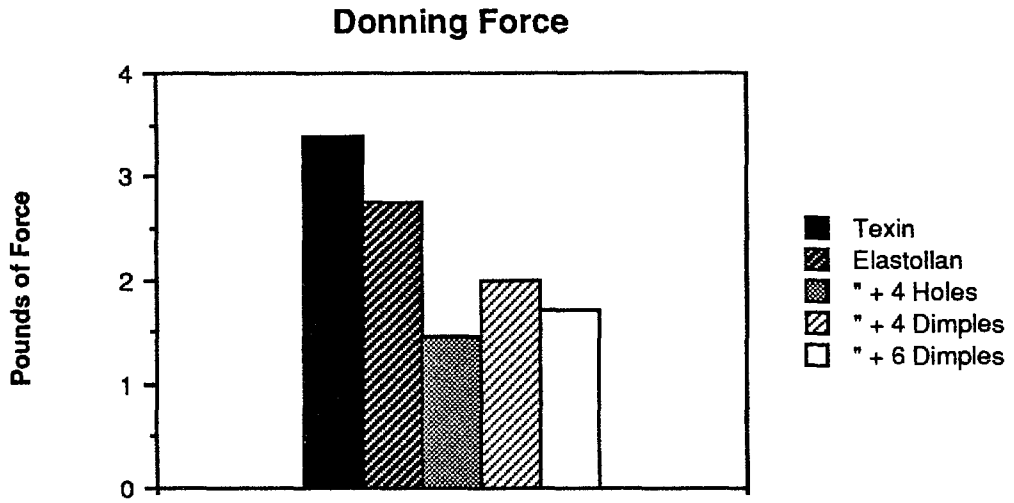

Figure F

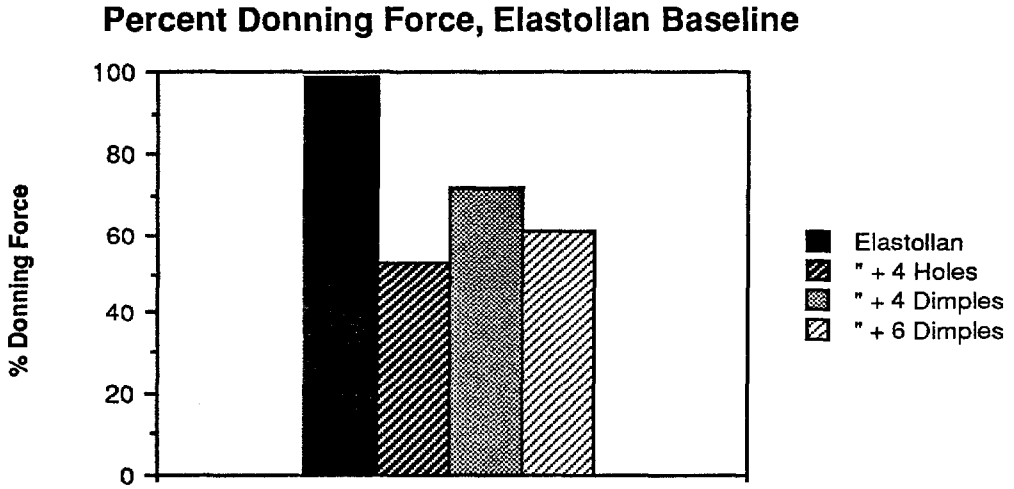

Figure G

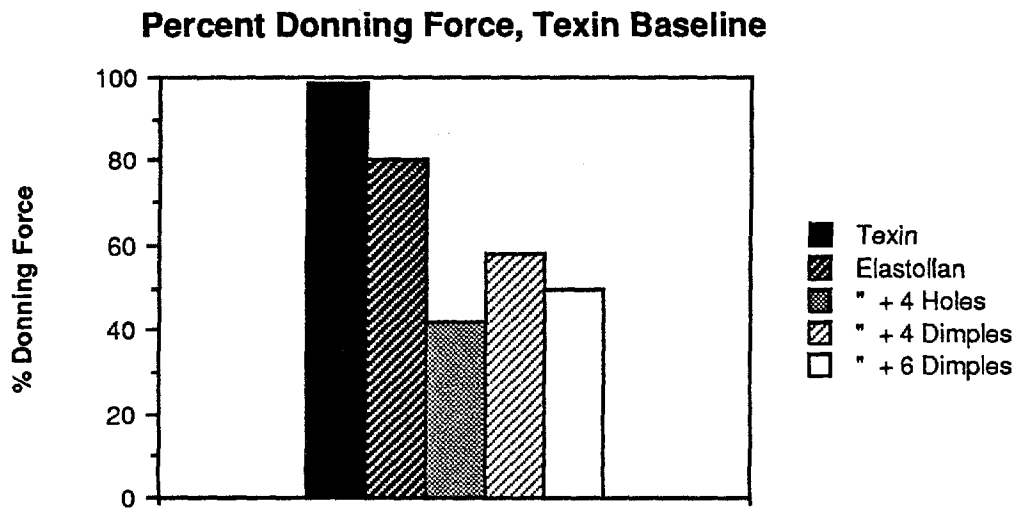

Figure H

Discussion

The significance of using dimpling to reduce the Donning Force by one third is that it will allow a greater range of penis sizes to use the same size Entry Hole. The significance of the 50% reduction in D.F. by changing from undimpled Texin to dimpled Elastollan is that Texin has been used in the prototypes being tested. If users are experiencing difficulties in donning, prototypes can be made that will reduce the Donning Force in half.

The information being used is from two data points per category. Yet additional testing in some of the categories has given up to six data points while the average values have not varied over 5% and ranking has never changed.

Latex samples were also included in the testing; however they gave very inconsistent data because their ability to stretch and deform led them to cling to the surface of the Delrin rod. Accordingly the force continued to climb even after the Entry Hole had been expanded to the full 1.8 inches. All the other samples show a strong and consistent drop in D.F. after expanding to 1.8 inches (see figure E).

Additional variations on the dimple concept have been outlined (see figures I, J, K, and L). These designs are a response to the fact that the material closer to the Entry Hole has to expand more and should therefore be relieved more than the outlying material. The concepts respectively are; I) dimples that are wider near the Entry Hole, J) dimples that are deeper near the Entry Hole, K) smaller dimples to break up the space between larger holes and, lastly, L) combinations of any of these three ideas.

Additional "Dimple" Concepts

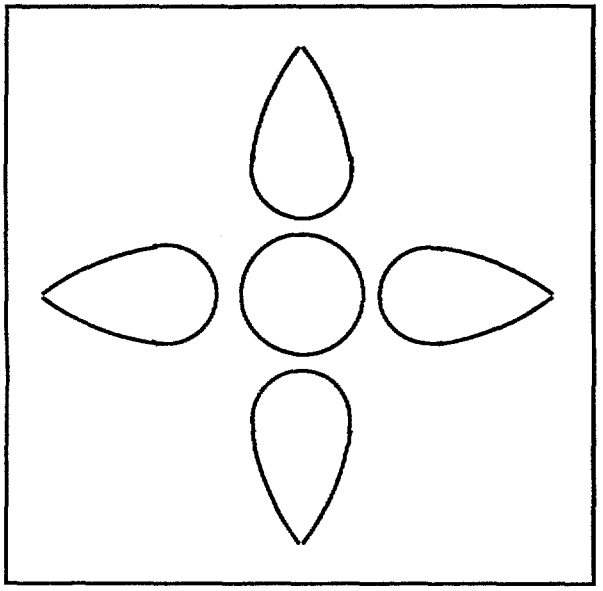

Fig. I) Dimple Assymetry

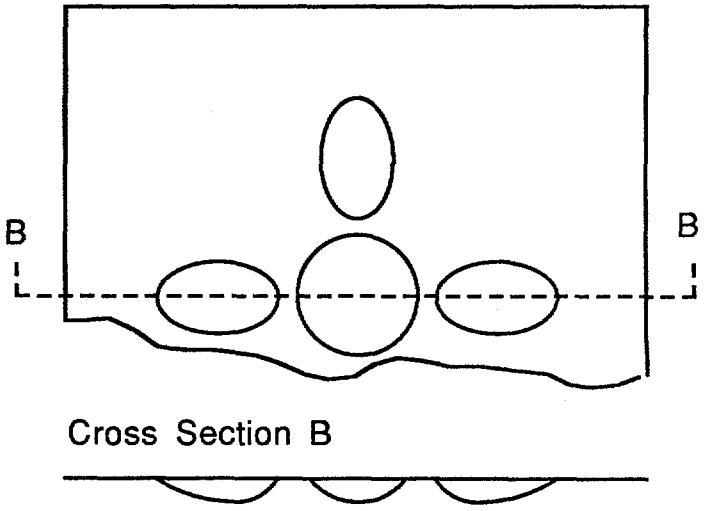

Fig. J) Dimple Cross-Sectional Assymetry

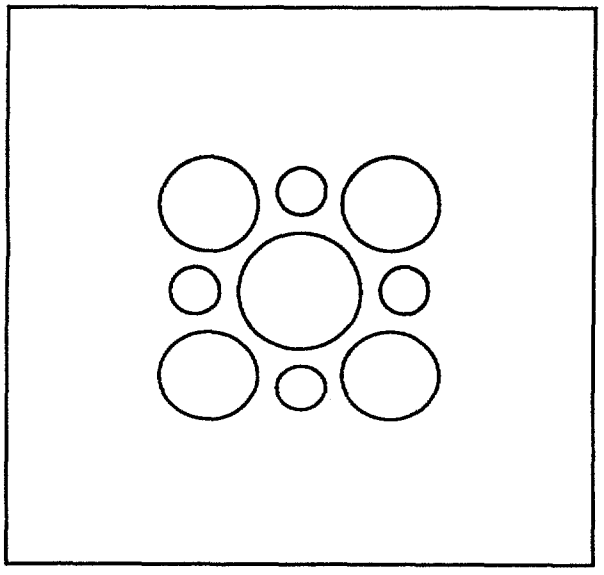

Fig. K) Multi Sized Dimples

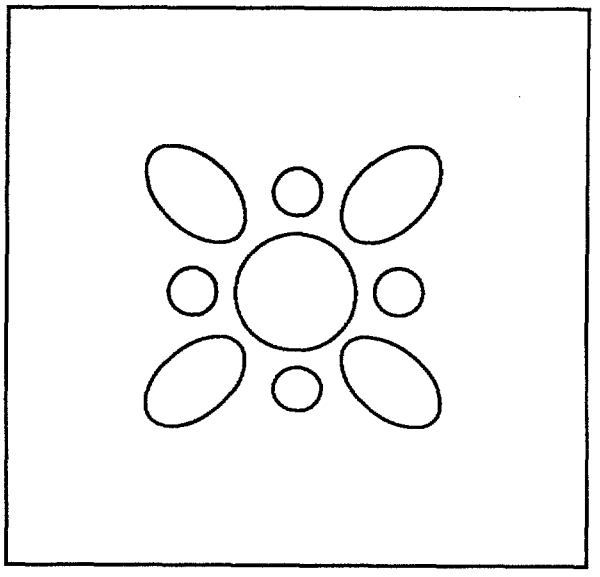

Fig. L) Combinations of I, J andK

Conclusion

The dimpling concept(s) may be patentable or could be added to claims of patents in progress. As such this avenue may warrant attention. Further exploration of the concept and testing will be left until human subject testing indicates that the donning problem represents a deterrent to acceptability.

FAHI 50MP

FAMILY HEALTH INTERNATIONAL

RECEIVED
JUL 17 1989
OLIVE & OLIVE
Attorneys at Law

Memorandum

To: Bob Wheeler

From: Charles Tanquary A C Tanquary

Date: July 13, 1989

Subject: Novel Package for Condoms

Attached is a sketch made by Malcolm Potts to show his concept of a new kind of package for condoms. He has drawn a bell-shaped package consisting of two halves which are fitted together. Attached to the flat base are pins or rods which extend into the neck of the condom and hold it in place with little or no stretching. When the package is bent or pulled apart, the halves separate, except where held together by the neck of the condom. One can then pull the pins apart to enlarge the opening of the condom to assist in donning. When the condom is in place, the package is discarded. The flat base of the package would be covered with foil or film which would be removed before pulling the package apart. Malcolm also sketched another version, in which the ring of the condom is held by pins, as before, but the condom lies flat in the package.

As I recall, Bob, you suggested a similar use of pins for a donning device, and I believe you sent sketches and descriptions to Steven Hultquist a year ago. Now may be a good time to renew the exploration. Designs like these should make it possible to package condoms without rolling them, and thus avoid the stretching and consequent permanent set that would otherwise occur. Such distinctive packaging may be appropriate for products that differ substantially from previous commercial products.

copies: Hultquist
Potts

178

APPENDIX D

PROPRIETARY INFORMATION

Appendix D Polymer Condom Project - Chronology of Development Milestones

---

1987

.March	FHI Meeting of Condom experts and polymer technology experts, New York City.
.March-May	Early designs and selection of polymer materials by FHI technical consultants.
.May-June	FHI Meeting of experts for critique of design and materials selection; review of research and development strategy and timetable; selection of prototype candidate for patent application; international patents search.
.June-Aug	Contacts with major industrial polymer suppliers and manufacturers; FHI meeting of experts.
.June-Dec	Design and prototype refinements; reviews with patent attorneys; subcontracts with manufacturers, etc.; FHI meetings of experts.

1988

.Jan	FHI meeting of experts on materials; monitoring contractors on materials testing, equipment design, packaging considerations.
.May 26	Patent filing, "Condom Article and Method of Making the Same" (07/199,430)
.April	FHI meeting of experts; review of materials, manufacturing, design and packaging, prototype testing and quality control; Project review meeting with third parties under confidentiality agreement.
.Jan 15	Patent filing, "Condom Articles, and Apparatus and Method for Making and Using the Same" (07/271,334)
.November	Preparation of textured elastomeric film and demonstration of properties.

PROPRIETARY INFORMATION

1989

.January	Preparation of prototypes 2 and 3.
.April 12	Preparation of prototype 4. Patent registration, "Condom Article and Method of Making the Same" (International counterpart of FAHI 5004P - PCT/US89/01532 for EPC protection).
.July	First preparation of condoms on commercial semi-automatic heat-sealing equipment.
.August	Preparation of prototypes 5A and 5B.
.July-Dec	In preparation, "Portable Tensile Tester for Testing Condoms"
.July-Dec	In preparation, "Printed and/or Dyed Thermoplastic Elastomer Articles"
.July-Dec	In preparation, "Condom with Thermispherical Dimpling at Proximal Opening"
.July-Dec	In preparation, "Condom Package"
.Aug-Dec	In preparation, "Textured Thermoplastic Elastomeric Films and Articles Comprising Same"
.Sept-Dec	Feasibility assessment, design pilot manufacturing plant.