BEST AVAILABLE COPY

PD-ABN-692
92911

NATIONAL POWER CORPORATION
Diliman, Quezon City

Project Description

Bac-Man Binary Cycle Geothermal Power Project

ENVIRONMENTAL MANAGEMENT DEPARTMENT
ENVIRONMENTAL IMPACT ASSESSMENT DIVISION

August 1992

BEST AVAILABLE COPY

Table of Contents

Project Description

Bac-Man Binary Cycle Geothermal Power Project

SECTION	TITLE	PAGE NO.
1.0	NAME AND ADDRESS OF PROJECT PROPONENTS	1
2.0	TYPE OF PROJECT	1
3.0	THE PROJECT SETTING	1
3.1	Declaration and Objective	1
3.2	The Need for Power	2
3.3	Economic Evaluation	3
4.0	GENERAL LAYOUT	4
4.1	Plant Layout	5
4.2	Construction Details	6
4.2.1	Safety Measures	7
4.2.2	Special Design Features	7
5.0	OPERATION AND MAINTENANCE	8
5.1	Process Flow	8
5.2	Raw Materials and Their Sources	8
5.2.1	Geothermal Brine	8
5.2.2	Geothermal Steam	8
5.2.3	Motive Fluid (Normal Penthane)	9
5.2.4	Water Supply	9
5.3	Noise, Wastes, Emissions and Effluents	9
5.3.1	Noise	9
5.3.2	Solid Wastes/Effluents	9
5.3.3	Emissions	10
5.4	Manpower and Equipment Requirements	10

B

SECTION	TITLE	PAGE NO.
5.4.1	Manpower	10
5.4.2	Equipment Requirement	10
5.4.2.1	Organic Fluid Turbine	10
5.4.2.2	Vaporizer	11
5.4.2.3	Preheater	11
5.4.2.4	Air Cooled Condenser	11
5.4.2.5	Forced Air Cooler	12
5.4.2.6	Miscellaneous Equipment	12
5.4.2.6.1	Compressed Air System	12
5.4.2.6.2	Lubrication Oil System	12
5.4.2.6.3	Fire Protection System	13
5.4.2.6.4	Standby Pump	13
5.4.2.7	Generator and Auxiliaries	13
5.4.2.7.1	Generator	13
5.4.2.7.2	Generator Transformer	14
5.4.2.7.3	Unit Auxiliary Transformer	14
5.4.2.7.4	Unit Station Service Transformer	14
5.4.2.7.5	Switchgear	15
5.4.8	High Voltage Switchyard	15
5.4.9	Associated Transmission Line	15
5.5	Expected Project Size and Scale	16
5.6	Maintenance	16
6.0	CONTINGENCY PLAN	16
7.0	ABANDONMENT	16
8.0	IDENTIFICATION ENVIRONMENTAL IMPACTS	16

TABLES

1	Energy Growth Rate for Luzon Grid	17
2	Demand and Energy Forecast for Luzon Grid	18
3	Economic Analysis	19
4	Baseline Water and Gas Chemistry of Bac-Man Wells	20

FIGURES

1	Location Map	21
2	Implementation Schedule	22
3a	Flashed Steam Binary Cycle Process	23
3b	Direct Brine Binary Cycle Process	24
4	Interconnection Scheme	25

Appendix A Identification Environmental Impacts 26

BAC-MAN BINARY CYCLE GEOTHERMAL POWER PROJECT

1.0 NAME AND ADDRESS OF PROJECT PROPONENTS

National Power Corporation (NAPOCOR)
Agham Road corner Quezon Avenue
Diliman, Quezon City, and

Ormat Incorporated
255 Glendale Avenue,
Sparks, Nevada, USA

2.0 TYPE OF PROJECT

The project is a binary cycle geothermal power plant capable of generating a gross capacity of 16.20 MW. The power plant, which is composed of 7 units of 2.0 MW capacity each and five units of a relatively smaller capacity of 0.5 MW each, are to be installed in five different sites in Palayang Bayan, Manito, Albay.

3.0 THE PROJECT SETTING

3.1 Declaration and Objective

The project will be implemented under the Build-Transfer-Operate (BTO) scheme wherein Ormat Inc. will be the main contractor.

The contractor shall undertake the design, engineering, manufacture, supply, delivery, installation/erection, civil works, testing and commisioning of the power units on a Turn-key basis. Once the project is already operational, NAPOCOR shall assume ownership of the plant in behalf of the Philippine government.

Ormat Inc. will be responsible for the operation and maintenance (O&M) of the plant under a cooperation period of 15 years afterwhich the plant will be turned-over to NAPOCOR free of charge.

This project was concieved to maximize the use of available energy of the country's operating geothermal fields using binary cycle technology. In this project, the units are intended to utilize unused wells as well as the separated brine from separator stations supplying steam for the Bac-Man I Geothermal Plant.

Advantages of the binary cycle power plant are as follows:

a. Environmentally Sound Technology

Binary cycle power plants operate on closed-loop system. The heat source, geothermal brine, coming from the separators passes through the vaporizer/preheater and is pumped to reinjection wells. The process does not allow pollutants of any form to escape from the system.

b. Can Produce Power at Low Temperature from Waste Heat Sources

Binary cycle power plants can generate electric power from geothermal fluids with temperature of as low as 94 deg C.

c. Easy to Construct/Install

The components are self-contained, outdoor type, compact and factory-integrated. Delivery period and construction lead time is about 16 months.

d. Easy Maintenance

The power plant components are compact-sized, hence, repair and maintenance can be undertaken without using sophisticated lifting devices. Equipment and auxiliaries can be dismounted, cleared, repaired and replaced in just few hours.

e. Reliable Operation

High availability factor of the unit can be expected.

f. Greater Utilization of Geothermal Power in Bac-Man Field.

g. Decrease Dependence of Luzon Grid on Oil-based Power Plants.

3.2 The Need for Power

Electrical energy consumption in Luzon have grown at an average rate of 6.8 % from 12,347 GWH in 1986 to 17,169 GWH in 1990. The expansion in energy demand reflects the

substantial increase in the number of electricity users and the more intensified energy use in the region. In particular, the relatively stable increase in residential and commercial consumptions as well as the slightly erratic but nonetheless positive growth in industrial use have accounted for the overall healthy profile of energy consumption in Luzon. The growth was also under possible by the vigorous expansion and improvement of service facilities in urban Manila as wells as in the provinces.

In 1991 Power Development Program wherein the energy sales data are translated to generation load requirements using certain assumptions on load factors and system losses, Table 1 shows that the greater demand for energy for the year 1991 has led to 4.50 % increase in the gross energy generation of NAPOCOR from 17,601 GWH attained in 1990 to 18,402 GWH in 1991.

From 1991 to 1995, the projected energy generation in Luzon Grid increased to 7.2 % annual growth rate and will slightly increase to 8.2 % in the following 5 years but will taper off to 7.5 % the next 5 years. The power generation level increased from 3,013 MW in 1991 to 8,647 MW in 2005 assuming a load factor and a system losses of 69.72 % and 2.50 %, respectively, Luzon Grid demand and energy forecast from year 1991 to 2005 is shown in Table 2.

Based on the above study/forecast, any additional capacity is essential to the system, hence, the implementation of the proposed Bac-Man Binary Cycle Plant shall likewise be given top priority.

3.3 Economic Evaluation

The evaluation is done by assesing the projects's Economic Internal Rate of Return (EIRR), wherein the costs are compared with the costs the consumers are willing to pay (CWP). This CWP criterion, computed at 2.98/kwh for Luzon Grid, was based on the ICC-technical staff's estimate for the consumers, cost of electrical power substitutes assumed are kerosene for residential consumers and self-provided diesel generators for commercial/industrial customers.

The cost streams include the ff:

a.	Investment Cost	:	$ 28,752,178.00 and ₱ 118,370,487.00
	Total Cost	:	₱ 894,679,293.00 at ₱ 27/$1.00 exchange rate
b.	Brine Fee	:	₱ 0.285/kwh based on 50 % of the existing steam price for Bac-Man I
c.	O & M Cost	:	$ 850,000/yr. based on the proposal by the operator for Mak-Ban Binary Project

The cost streams are translated in its present values by applying the social discounting rate of 15 %. The difference or the netflow in the cost streams determines the EIRR. It is assumed in the analysis that the cooperation period is 15 years.

The result of the evaluation indicates that the project is economically acceptable. The EIRR obtained is 20.74 %, and is more than the required 15 % return. The NPV registered a positive ₱263 million in benefits, favoring of the economy. The economic analysis is shown in Table 3.

4.0 GENERAL LAYOUT

Five sites are being considered for the locations of the plants, namely:

a. PAL-16
b. PAL-7
c. PAL-6
d. PAL-1
e. PAD-RA

Figure 1 shows the location of the proposed sites whose geographical location are distributed along the production and reinjection lines for the 2 x 55 MW main power plant.

PAL 16

This site is located adjacent to and south of SS No. 1. It is characterized by a relatively rolling terrain with an area of approximately 500 sq. m.

PAL 7

This site is also characterized by a relatively rolling terrain west of SS Nos. 1 and 2 near the corridor from Pressure Reducing Station to Low Point Station. It use an area of approximately 1,000 sq. m.

PAL 6

The site has an area of approximately 2,000 sq. m. located on the western side of the Gayong River SE of the Low Point Station of the Steam gathering system for Bac-Man I plant. The proposed ste is characterized by a relatively rolling terrain.

PAL 1

The site is characterized by a relatively flat terrain located south of Bac-Man I near the Control Center of PNOC-EDC Steam Gathering System and north of steam/brine source well PAL 1B.

PAD RA

The site is characterized by a relatively flat terrain located in the western side of the Pigsabangan River and Bac-Man I. It is near the end-point of the Bac-Man I reinjection line and has an area of approximately 3,000 sq. m.

4.1 Plant Layout

The main structures and facilities to be constructed within the plant site are the following:

a. binary cycle geothermal genrating sets

b. main and auxiliary transformers

c. forced air cooler and their related facilities

d. switchyard and its related structures and facilities

e. control building which houses the control, tool and battery rooms

f. elevated water tank

The control room shall be slightly elevated from the rest of the structures to provide good view of the generating units. The generating units shall have reinforced concrete foundation resting on a 3,000 psi soil bearing capacity.

Intrasite roadways shall be provided for convenient access within ths power plant area. Drainage system shall be of reinforced concrete pipes conforming to ASTM standards with collared joints and sand beddings. Sewage pipes shall be PVC for aboveground applications with proper anchorage and joint sealing, and cast iron for embedded pipings.

The pipe racks for the brine's supply and discharge shall pass between the rows of the OEC units, with the supply line coming from one side and the discharge going to the opposite side. The control room will be situated on one end of the site, while the switchyard and the motive fluid injection pumps will be in between the generating sets and the control room.

The motive fluid storage tanks will be at the opposite end of the injection pumps while air coolers will be installed in structural frames above the generating sets.

The power to be generated by the proposed plants shall be fed through 13.8 KV single circuit transmission line to a central station at PAL-1 where a 20 MVA, 13.8 KV /69 KV power transformer is proposed to be installed. This will be tapped to the existing 69 KV Tap Tublijon - Bac-Man I line then to the 69 KV SC T/L going to Daraga S/S for feeding to the Luzon Grid.

4.2 Construction Details

The project implementation schedule is shown in Figure 2. Technical and commercial negotiations shall start by mid August and shall end by mid September. Contract approval and effectivity is targetted by mid October 1992.

Upon the contract effectivity, design works shall commence and will have a duration of six months.

The contractor shall also start the procurement of all needed materials. Manufacturing shall commence one month after start of procurement and will have a duration of eleven months.

Power plant construction shall commence by mid April 1993 and shall last for 11 months. Shipment of all equipment and materials shall commence three months after the start of construction and will be completed in five months.

Start-up of the plant shall commence mid January 1994 up to mid May 1994. Targetted commissioning of the plants shall be from mid May to mid June 1994.

4.2.1 Safety Measures

Strict implementation of safety rules and regulations shall be enforced during the construction stage. All working personnel shall be provided with appropriate safety gadgets such as hard hats, safety shoes and belts, gas masks, gloves, ear plugs, and other protective devices. They shall be given safety instructions regarding occupational safety and health hazards as part of their orientation or seminar.

Sanitary facilities, potable drinking water and garbage facilities shall be provided. Medical staff and facilities shall be stationed within the compound to ensure adequate medical care to injured workers.

Proper security shall be imposed and the whole project area shall be provided with firefighting equipment for alarm and control.

4.2.2 Special Design Features

To minimize the adverse environmental impact, the proposed power plant shall be constructed with the following design features.

- Reinjecting the used geothermal brine/steam condensate into the ground.
- use of closed-loop motive fluid system
- Utilization of air for cooling
- use of compact and fully closed components to minimize noise
- proper selection of materials for corrossion and erosion resistant

5.0 OPERATION AND MAINTENANCE

5.1 Process Flow

The binary cycle project is based on the Rankine Power Cycle which uses organic fluid as motive fluid. Heat supply for the motive fluid can be derived from the geothermal steam (flashed steam heating) and/or brine (direct brine heating). The brine/steam collected from the separators flows through the pipe side of the vaporizer. The motive fluid which flows in the shell side of the vaporizer is vaporized as the heat is transferred directly from the brine or steam. The resulting motive fluid vapor expands as it passes through the turbine which is directly coupled to the generator that produces 3-phase electrical power. The exhaust vapor is subsequently condensed in the air-cooled condenser. The condensed fluid accumulates at the hot well and then flows to the feed pump suction inlet by gravity and then pumped back to the preheater/vaporizer. The recycled motive fluid entering the preheater is heated while flowing in the shell side by the brine/steam condensate leaving the vaporizer which flows through the pipe side of the preheater. The brine/steam condensate collected at the preheater's outlet is reinjected into the injection wells. Figures 3a and 3b show the flow diagram of the flashed steam and direct brine binary cycle process.

5.2 Raw Materials and Their Sources

5.2.1 Geothermal Brine

The Bacon-Manito geothermal resource has about five (5) separators grouped into two (2) satellite stations. Satellite station No. 1 is composed of separators S3, S4 and S5 while satellite station No. 2 is composed of separators S1 and S2. These separators shall operate at pressures ranging from 1.0 to 1.25 MPa (abs), wellhead pressures ranging from 1.03 to 1.28 MPa (abs) and temperature of about 190 °C. Separated water from these separators shall have a flow rate of approximately 1,782 tons/hr.

5.2.2 Geothermal Steam

The Bacon-Manito resource has four (4) unused wells (PAL-1, PAL-8D, PAL-D, PAL 16D) which were not planned to be hooked up for the operation of the 110 MW Bac-Man I power

plant. These wells are low enthalpy wells which are not capable of sustaining enough pressures to drive the conventional turbine units. The unused wells have pressures ranging from 0.29 to 1.1 MPaa and temperature of about 133 °C to 185 °C. The NCG content of these wells ranges from 0 to 2.2 percent. The steam from these wells shall have a production rate of approximately 83.7 tons/hr while the water shall have a flow rate of about 275.2 tons/hr. The baseline water and gas chemistry of Bac-Man Wells is presented in Table 4.

5.2.3 Motive Fluid (Normal Penthane)

Normal Pentane is classified as a non-toxic but flammable organic fluid. During the initial stage of operation, the motive fluid will be delivered on each project site by the contractor (ORMAT). A pressurized tank will be constructed to store the motive fluid.

5.2.4 Water Supply

Each project sites will be provided with deepwell to supply the water to be used for fire extinguishing and domestic needs.

5.3 Noise, Wastes, Emissions and Effluents

5.3.1 Noise

The noise level at the plant is expected to be well within the standard regulation since it is equipped with compact and closed-type components.

5.3.2 Solid Wastes/Effluents

Solid waste generated during construction will be disposed in a designated dump site. Temporary sanitary facilities will be constructed in order to contain the waste generated by the construction personnel.

The plant will unlikely generate thermal effluents since air will be utilized for cooling system. The geothermal brine/steam condensate collected at the end of the process will be injected back into the ground. Rainfall will be directed into the drainage canals. Sewage wastes will be disposed into the septic tank.

5.3.3 Emissions

There will be no gas emission coming from each plant since the motive fluid operates on a close-loop system. The exhaust vapor of motive fluid is condensed and flows to the cycle feed pump and then sent back to the preheater/vaporizer.

5.4 Manpower and Equipment Requirements

5.4.1 Manpower

Activities at the plant site during construction includes civil works, erection/installation, testing and commissioning. Number of workers will depend on the activities at the site. The number of unskilled workers will decrease while the number of skilled workers will increase as the construction near completion. It is estimated that about 300 workers will be hired during construction.

A number of highly skilled technician and engineers will be needed during testing and commissioning of the plants. Some of them may be accommodated in temporary construction camps at the vicinity of each.

5.4.2 Equipment Requirement

5.4.2.1 Organic Fluid Turbine

There shall be two (2) organic fluid tubines coupled to the two sides of the electrical generator. The turbine is a single or double stage, impulse type condensing unit specially designed to suit the chemical stability and compatibility of the selcted organic motive fluid. The organic turbine shall be driven by the organic fluid vapor heated by the brine/steam coming from the separator station of the existing plants.

The sealing of the turbine shall be accomplished by a double mechanical shaft seal with oil as buffer fluid. The mechanical seal shall be of the cartridge type designed for easy maintenance and simple approach for replacement.

5.4.2.2 Vaporizer

The vaporizer is a horizontal tube and shell heat exchanger. The tube section is made of carbon steel with tubes ending in tubesheets and supported by support plates and baffles. The shell section is a cylindrical envelope made of carbon steel.

Relative thermal expansion between shell and tubes is compensated by a stainless steel expansion joint located on the outer envelope.

Heating fluid flows through the tube section while the organic fluid flows and evaporates in the shell section.

A level transducer is mounted on the vaporizer in order to control the motive fluid level for optimal power output. A sight glass is mounted on the vaporizer side for liquid level indication.

5.4.2.3 Preheater

The preheater is a horizontal-type shell and tubes type heat exchanger. Each tube bundle is made of stainless steel tubes ending in tubesheets and supported by support plates and baffles. The shell section is a cylindrical envelope made of carbon steel. Relative thermal expansion of the shell and tubes are compensated by a stainless steel expansion joint located on the outer envelope.

Heating fluid (geothermal brine) flows through the tube section of the preheater while the working fluid is through the shell section.

5.4.2.4 Air Cooled Condenser

The condenser is an induced draft air cooled heat exchanger. The motive fluid is distributed in the tubes

that are arranged in one-pass configuration. The motive fluid is cooled and condensed while flowing in the tubes by the air which flows outside of finned tubes in a crossflow pattern. The condensed motive fluid accumulates in the outlet box from where it flows by gravity to the motive-fluid filter and pump. The condenser tubes are manufactured of carbon steel with aluminum fins wrapped on them.

5.4.2.5 Forced Air Cooler

Forced air coolers will be used to cool the working fluid in the condenser. It shall be designed under the following conditions:

Wet Bulb Temperature	21.45 °C
Dry Bulb Temperature	22.19 °C
Relative Humidity	88.7% (mean min.) 94.45% (mean max.)

5.4.2.6 Miscellaneous Equipment

5.4.2.6.1 Compressed Air System

The purpose of the system is to supply the compressed air necessary to operate and control actuator of valves, control valves and other pneumatic components. The compressed air will be used also for cleaning plant auxiliary equipment accessories during preventive maintenance period.

A compressor station shall be provided with the necessary cooler, filter and dryer to ensure the supply of oil-free and purified air to the regulating devices and instruments of the plant. It is self-controlled and starts and stops automatically according to the air pressure in the distribution header. A reservoir is installed at the outlet of the compressor station. A compressed air piping system shall be provided to distribute the air to plant equipments. The line shall be equipped with moisture traps and drains as well as with the necessary instrumentation to enable the control and monitoring of the system.

5.4.2.6.2 Lubrication Oil System

A common lubricating oil system shall be provided for the turbine bearings, auxiliary drive, generator bearings, and exciter bearing. This system shall be composed of main oil tank, main oil pump, oil purifiers, oil coolers, oil transfer pump, auxiliary oil pump and vapor extractor.

5.4.2.6.3 Fire Protection System

Fire protection system shall be installed to safeguard the power station against combustible/flammable element such as forced air cooler structure, generator coolant, lube oil reservoir, working fluid tanks, seal oil tank, lube oil purifier, main transformer and turbo-generator set.

Deepwell will be constructed to supply water to the water station through an underground water line. The motive fluid storage tank area will be also supplied with water via the water line to spray water in case of necessity to cool the tank.

Fire water station shall consist of hydrants and fire water hoses stored on spools and ready to be used. The number of station and their location in the plant are designed, that the areas in the plant where fire can originate or be spread, will be within reach of the water system.

The control room shall be protected against fire by a Halon extinguishing system. This system operates automatically in case of fire.

The detectors (hydrocarbon gas, smoke, flame) shall be placed around the turbine/generator, motive fluid storage tank and in the buildings.

5.4.2.6.4 Standby Pump

A diesel-driven standby pump which can be started in cases of power failure shall be provided.

5.4.2.7 Generator and Auxiliaries

5.4.2.7.1 Generator

The generator is a synchronous type, brushless, 3-phase air cooled, weather protected, horizontal type machine. It has a dual shaft extension to enable it to be driven by two turbines. It shall also have flange-mounted side (sleeve) bearings which are oil pressure lubricated. The bearings are protected against the entrance of dust, moisture and salt-laden air.

A suitable connection box (separate from the main terminal box) is furnished for all thermistors, temperature detectors and space heater leads.

The normal operating characteristic of the generator are as follows:

Maximum continuous rating at 0.80 lagging power factor	:	2,000/500 KW
KVA output at 0.80 power factor	:	2,500/625 KVA
Voltage at generator terminals	:	13.8 KV
Speed	:	3,600 RPM
Frequency	:	60 Hertz
Winding Connection	:	Wye Connected

5.4.2.7.2 **Generator Transformer**

The generator transformer shall be connected to the generator unit in three phase. It shall be oil-immersed, self-cooled, outdoor type, equipped with off-load tap changers on both the high and low voltage windings. Its design shall take into consideration the presence of hydrogen sulfide (H_2S) in the atmosphere.

5.4.2.7.3 **Unit Auxiliary Transformer**

The unit auxiliary transformer shall be dry type, self-cooled, equipped with off-load tap changer on the high voltage winding and be enclosed in the 13.8 KV metal clad switchgear.

5.4.2.7.4 **Unit Station Service Transformer**

A single-unit power transformer will be provided during construction and start up/commissioning of the Binary unit. It will also serve as station service transformer after the duration of the project. It shall be oil-immersed, self-cooled, outdoor type.

5.4.2.7.5 Switchgear

The switchgear shall be metal-clad type for operation on 13.8 KV and 460 V, 3-phase, and shall be manufactured in accordance with the latest edition of ANSI and NEMA Standards.

5.4.8 High Voltage Switchyard

The switchyard shall be of the conventional design using SF_6 Gas Insulated Power Circuit Breakers (PCB). The PCB shall be provided with an automatically operated compressor to provide air for its opening and closing action. A pressure gauge shall be provided for proper monitoring of the presence of SF_6 inside the breaker tank.

All electrical panels including the PCB tanks must be painted with the most suitable anti-corrosion paint while the porcelain insulators shall be regularly cleaned to preclude the accumulation of dusts and other corrosive particles which might trigger flush-over when moisture was introduced by nature.

5.4.9 Associated Transmission Line

The proposed interconnection of five separate binary power plants with an aggregate capacity of approximately 16.2 MW includes the construction of 51 km of 13.8 KV single circuit transmission line on wood pole structure utilizing No. 4/0 ACSR and terminating at PAL-1 Power Plant. A 20 MVA, 13.8/69 KV power transformer will be installed in PAL-1 Power Plant to step-up the power generated by the plants.

Delivery of the power generated by the plants shall be through a 5 km, 69 KV single circuit transmission line on wood poles using a 1 x 336.4 MCM ACSR which is to be tapped to the existing 69 KV single circuit transmission line at Tap Tublijon-Bac-Man I to the 69 KV single circuit transmission line going to Daraga substation 69 KV switchyard. The proposed associated transmission line will be protected by a 69 KV power circuit breaker and other protection equipment. Figure 4 shows the proposed scheme of interconnection for Bac-Man Binary Cycle Geothermal Power Project.

5.5 Expected Project Size and Scale

The Bac-Man Binary Cycle Power Project is expected to contribute 16.2 MW to the Luzon grid.

The estimated project cost is ₱ 894,679,293 broken down to US$ 28,752,178 forex and ₱ 118,370,487 local portions. It is expressed in 1992 Price Level at ₱ 27 per US$1.00 exchange rate. The five separate binary power plants are expected to be on stream starting May 1994. The economic life of the power plants is 20 years

5.6 Maintenance

Periodic maintenance shall be strictly observed during plant operation. The plant should undergo annual or semi-annual shutdown to regulary check the plant facilities based on the recommendation of the manufacturer.

6.0 CONTINGENCY PLAN

The proposed power plants were designed to withstand natural calamities such as typhoon, rainwater, flooding, landslide and earthquake. Each plant will be equipped with firefighting equipment to protect the whole plant in case of fire. Sophisticated detection system will be porvided around the OEC units, motive fluid storage tank and in buildings.

7.0 ABANDONMENT

After 20 years of service, the plant will not be economically viable to operate anymore. All usable materials will be taken out. Equipments which are in good condition will be utilized as spare parts of other generating units. Building and other permanent structures will be left and used for other purposes.

8.0 IDENTIFICATION ENVIRONMENTAL IMPACTS

Probable environmental impacts are presented in Appendix A.

TABLE 1
LUZON GRID
DEMAND AND ENERGY FORECAST
1991 POWER DEVLOPMENT PROGRAM

Year	* Sales Level Energy (GWH)	Demand (MW)
(Actual)		
1986	13535	2311
1990	17601	2885
Growth Rate (%) (1986-1990)	6.8	5.7
(Forecast)		
1991	18402	3013
1995	24868	4072
Growth Rate (%) (1991-1995)	7.2	7.1
1996	26868	4405
2000	36815	6029
Growth Rate (%) (1996-2000)	8.2	8.2
2001	39569	6480
2005	52807	8647
Growth Rate (%) (2001-2005)	7.5	7.5

* - The indicated sales data summarizes the energy and demand data at tje generation load requirement using certain assumption on load factors and system losses.

TABLE 2
LUZON GRID
DEMAND AND ENERGY FORECAST
1991 POWER DEVLOPMENT PROGRAM

Year	Sales Level Energy (GWH)	Generation Level Energy (GWH)	Generation Level Demand (MW)	Assumptions (%) Load Factor	Assumptions (%) Losses
(Actual)					
1986	12347	13535	2311	66.86	8.78
1987	13274	14455	2443	67.55	8.17
1988	14707	15438	2582	68.26	4.74
1989	15197	16488	2729	68.97	7.83
1990	17161	17601	2885	69.64	2.50
Growth Rate (%) (1986-1990)	6.8	6.8	5.7	-	-
(Forecast)					
1991	17942	18402	3013	69.72	2.50
1992	19234	19727	3230	69.72	2.50
1993	20619	12247	3463	69.72	2.50
1994	22103	22670	3712	69.72	2.50
1995	24246	14868	4072	69.72	2.50
Growth Rate (%) (1991-1995)	7.2	7.2	7.1	-	-
1996	26226	36898	4405	69.72	2.50
1997	28376	39104	4765	69.72	2.50
1998	30703	30490	5156	69.72	2.50
1999	33221	34072	5579	69.72	2.50
2000	34895	36815	6029	69.72	2.50
Growth Rate (%) (1996-2000)	8.2	8.2	8.2	-	-
2001	38580	39569	6480	69.72	2.50
2002	41473	42537	6965	69.72	2.50
2003	44584	45727	7487	69.72	2.50
2004	48928	69156	7049	69.72	2.50
2005	51487	52807	8647	69.72	2.50
Growth Rate (%) (2001-2005)	7.5	7.5	7.5	-	-

Table 3
BAC-MAN BINARY GEOTHERMAL PROJECT
Economic Analysis
(In million Pesos)

		(PROJECT COSTS)						(BENEFITS)		
Reference No.	Yr.	Inv. Cost	O & M Cost	Brine Cost	Total Cost	Gross Gen.* Gwh	Net Gen. Gwh	Energy Sales	Consumers Will to pay @	Net Flow
0	1992	134.20			134.20					
1	1993	626.28			626.28					
2	1994	134.20	11.48	16.18	161.85	56.76	51.16	45.02	134.16	-134.20
3	1995		22.95	32.36	55.31	113.53	102.32	90.04	268.32	-626.28
4	1996		22.95	32.36	55.31	113.53	102.32	90.04	268.32	-27.70
5	1997		22.95	32.36	55.31	113.53	102.32	90.04	268.32	213.01
6	1998		22.95	32.36	55.31	113.53	102.32	90.04	268.32	213.01
7	1999		22.95	32.36	55.31	113.53	102.32	90.04	268.32	213.01
8	2000		22.95	32.36	55.31	113.53	102.32	90.04	268.32	213.01
9	2001		22.95	32.36	55.31	113.53	102.32	90.04	268.32	213.01
10	2002		22.95	32.36	55.31	113.53	102.32	90.04	268.32	213.01
11	2003		22.95	32.36	55.31	113.53	102.32	90.04	268.32	213.01
12	2004		22.95	32.36	55.31	113.53	102.32	90.04	268.32	213.01
13	2005		22.95	32.36	55.31	113.53	102.32	90.04	268.32	213.01
14	2006		22.95	32.36	55.31	113.53	102.32	90.04	268.32	213.01
15	2007		22.95	32.36	55.31	113.53	102.32	90.04	268.32	213.01
16	2008		22.95	32.36	55.31	113.53	102.32	90.04	268.32	213.01
17	2009	-223.67	22.95	32.36	55.31	113.53	102.32	90.04	268.32	436.68
NPV @15%		759.48	110.15	155.29	1,024.92		491.07	432.14	1,287.79	262.86
EIRR										20.74%

Asumptions:

Plt. Cap.	14.60 MW (Net)
Gross Cap.	16.20 Mw
Inv. Cost	894.68 PMillion
O & M Cost	22.95 PMn/Yr ($0.85 Mn/Yr)
Brine Cost	0.2852 P/kwh
Plt. Factor	0.80
Trans/Dist.	12.00%
Exch. Rate	27.00

Table 4
Baseline Water Chemistry (BAC-MAN Wells)

	WPH (MPaa)	Sampling Pressure (MPaa)	pH	Na (mg/kg)	Cl (mg/kg)	SO4 (mg/kg)	SIO2 (mg/kg)
PAL3D	2.51	0.398	6.38	3954	7249	21.8	700
PAL4D	3.35	0.349	7.51	4136	7551	22.7	764
PAL8D	4.44	0.619	7.16	4630	8544	7.6	1062
PAL9D	2.39	0.094	7.68	4774	9088	20.8	865
PAL10	1.95	0.980	6.66	4394	7977	23.0	807
PAL11D	3.46	0.839	6.79	4490	8502	21.9	763
PAL12D	3.27	0.839	7.03	5030	8779	18.0	822
PAL13D	3.54	0.910	6.84	4639	8413	19.0	839
PAL14D	1.37	0.556	7.15	5200	9607	12.5	914
PAL15D	2.54	0.940	7.25	4580	9593	26.0	906

Baseline Gas Chemistry

	WPH (MPaa)	Sampling Pressure (MPaa)	CO_2 (mmoles	H_2S per 100	N_2 moles)	%NCG TD	%NCG@ 0.7 MPaa
PAL3D	2.51	0.570	169	5.55		0.41	1.55
PAL4D	3.35	0.349	321	6.98	0.236	0.78	2.60
PAL8D	4.44	0.619	772	9.60	0.374	1.90	4.79
PAL9D	2.39	0.429	105	3.98	0.310	0.26	1.16
PAL10	1.62	0.904	620	13.70	0.461	1.54	4.50
PAL11D	3.46	0.812	1084	12.80	0.700	2.60	7.60
PAL12D	3.27	0.839	327	5.76	0.953	0.80	2.90
PAL13D	3.537	0.910	264	7.00	0.390	0.64	2.30
PAL14D	1.37	0.551	255	4.39	1.200	0.62	2.00
PAL15D	2.54	0.463	151	5.10	0.620	0.40	1.99

Note: TD - Total Discharge

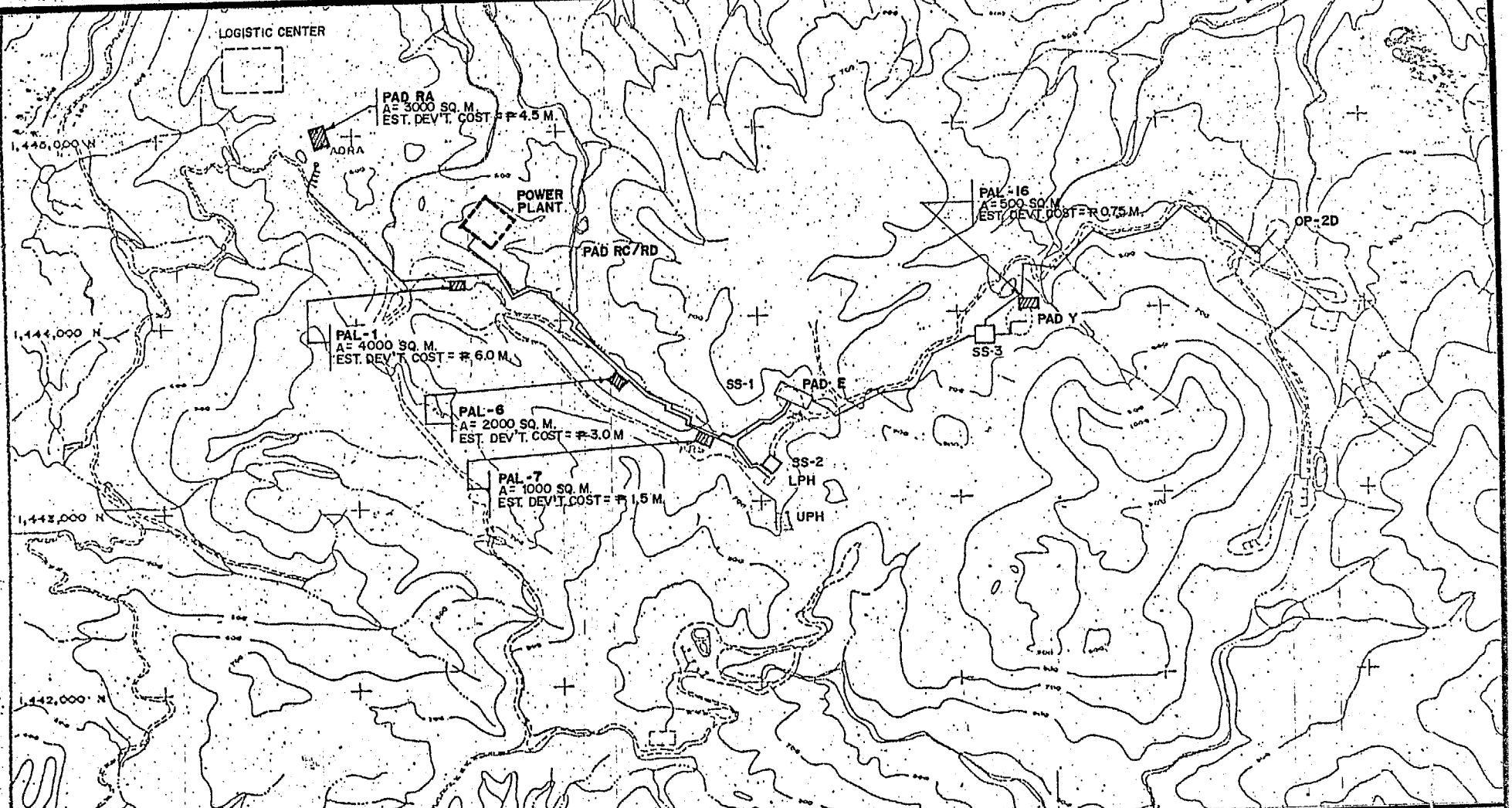

NATIONAL POWER CORPORATION

Figure 1

LOCATION MAP

Bac-Man Binary Cycle Geothermal Power Plant

Figure 2

IMPLEMENTATION SCHEDULE
BAC-MAN BINARY CYCLE POWER PROJECT
(16.20 MW)

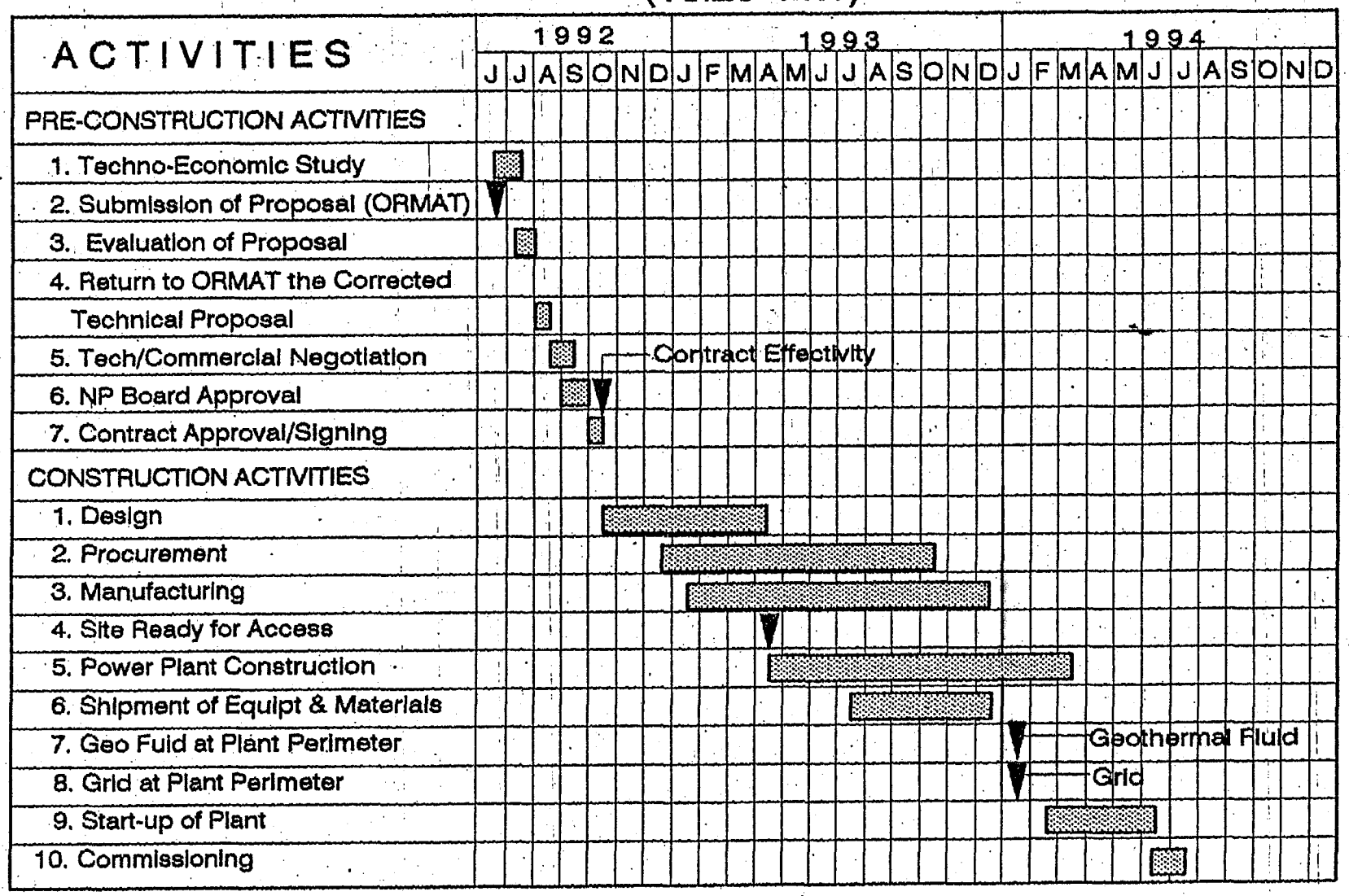

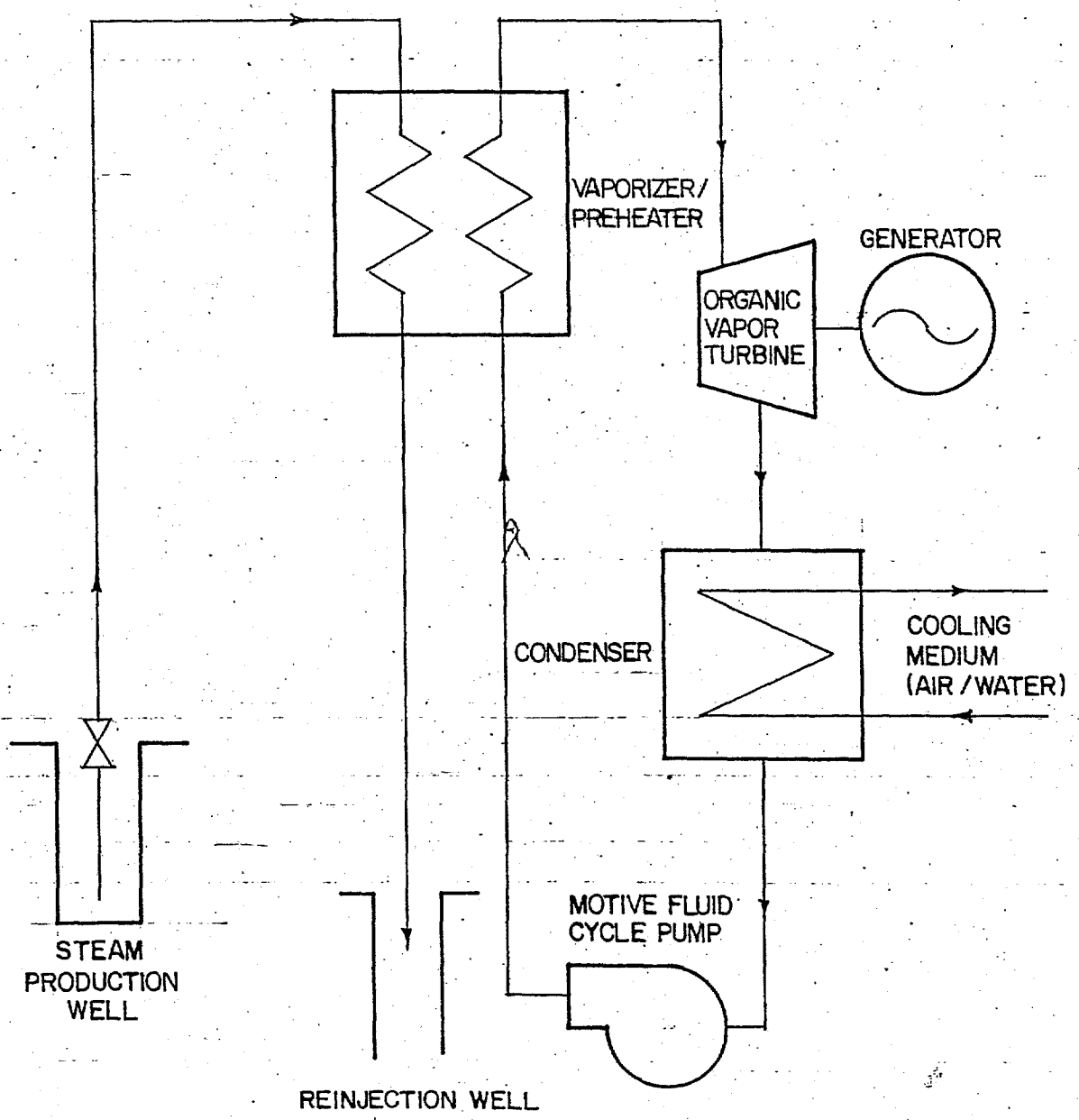

NATIONAL POWER CORPORATION

Figure 3a

DIRECT BRINE BINARY CYCLE
Bac – Man Binary Cycle Geothermal Project

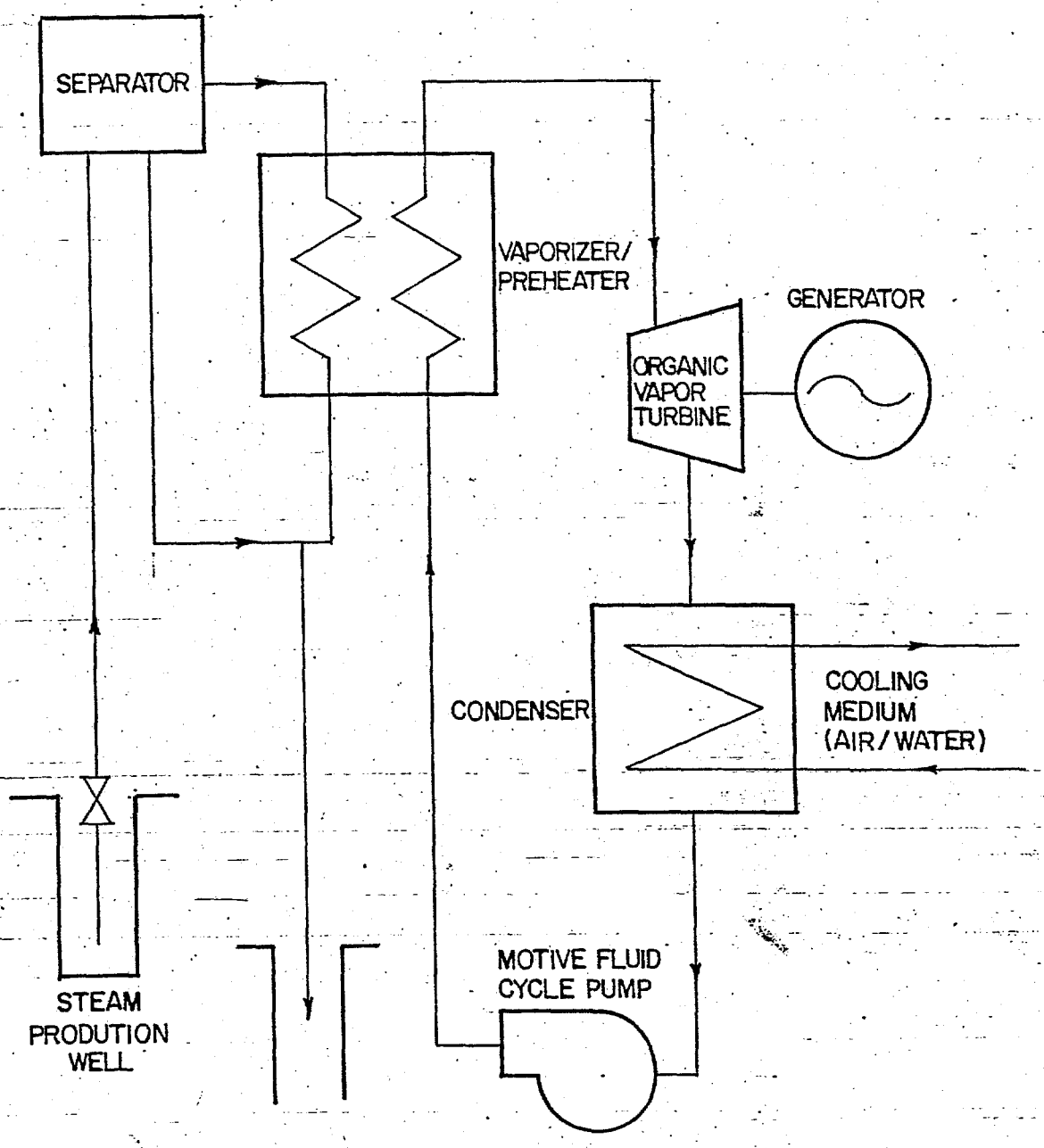

NATIONAL POWER CORPORATION

Figure 3b

FLASHED STEAM BINARY CYCLE
Bac-Man Binary Cycle Geothermal Project

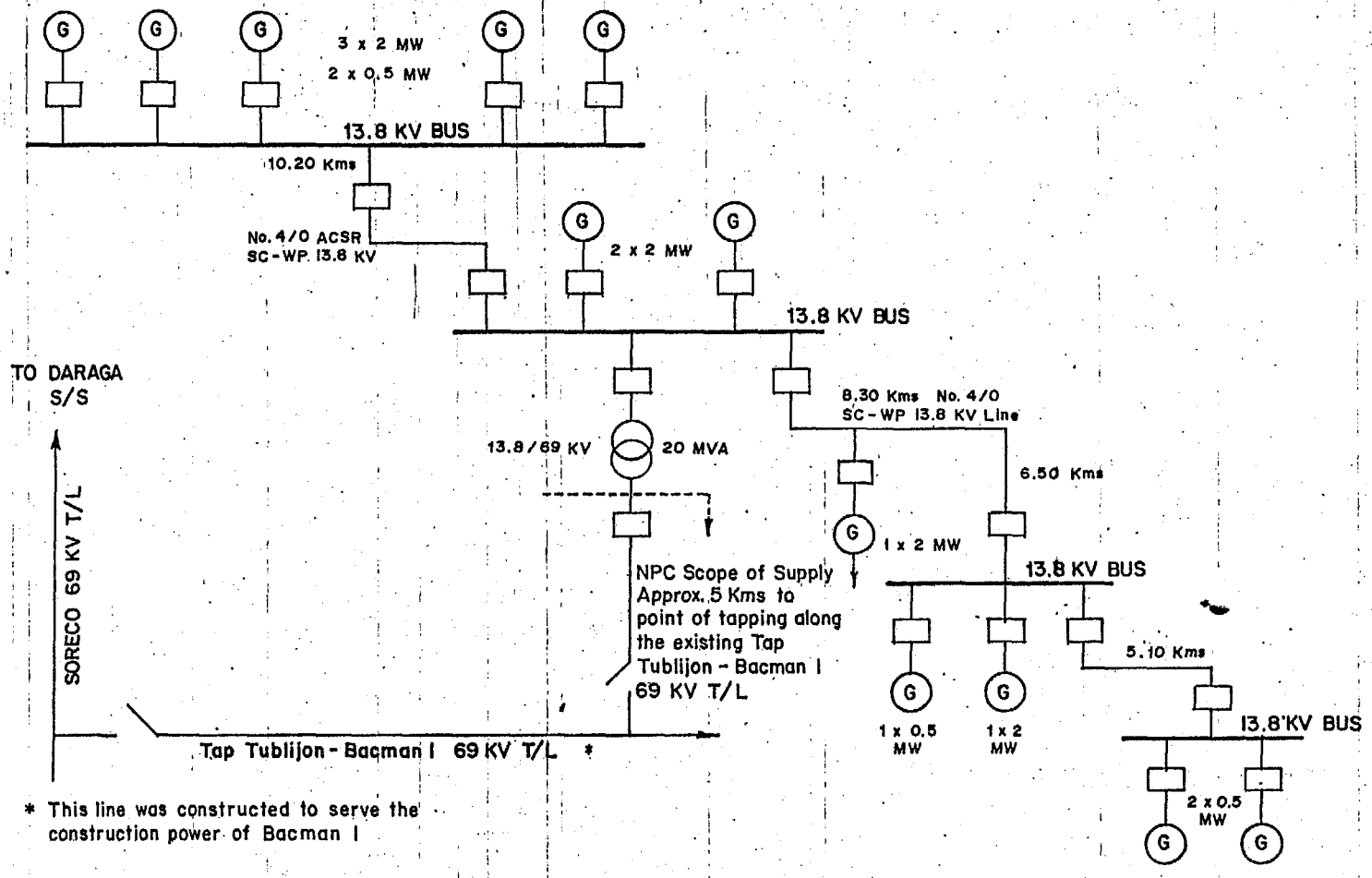

* This line was constructed to serve the construction power of Bacman I

NATIONAL POWER CORPORATION

Figure 4

PROPOSED
SCHEME OF INTERCONNECTION
Bac-Man Binary Cycle Geothermal Power Project

Instruction

Identification Environmental Impacts

Answer the following questions by placing an "X" in the appropriate YES/NO space; consider activity, construction, operational, as well as indirect impacts.

Use the "explanations" Section to clarify points or add information

A. Natural Biological Environment

	Direct	Indirect	Short Term	Long Term	Reversible	Irreversible	Severe	Moderate	Insignificant
1. Will the proposed activity affect any natural feature or water resource adjacent to or near the activity areas? YES ___ NO X									
If YES, specify natural feature affected:									
a. Surface water hydrology									
b. Surface water quality									
c. Soil/erosion									
d. Geology									
e. Climate									
2. Will the activity affect wildlife of fisheries? YES ___ NO X									
If YES, specify vegetation and hectare(s) affected.									
a. Wildlife habitat									
b. Ecology of fisheries									
3. Will the activity affect natural vegetation? YES ___ NO X									
If YES, specify vegetation and hectare(s) affected.									

B. Environmental Hazards

1. Will the activity involve the use, storage, release of, or disposal of any potentially hazardous substances? YES X NO ____

   If YES, specify substance and potential effect. N-Pentane is used as binary heat exchange fluid (closed loop). It is a non-toxic but flammable organic fluid.

2. Will the activity cause an increase or probability of increase of environmental hazards? YES ____ NO X

   If YES, specify type.

3. Will the activity be susceptible to environmental hazard due to its locations? YES ____ NO X

   If YES, specify type.

C. Resource Conservation and Use

	Direct	Indirect	Short Term	Long Term	Reversible	Irreversible	Severe	Moderate	Insignificant
1. Will the activity affect or eliminate land suitable for agricultural or timber production? YES ____ NO X									
If YES, specify hectare and soil class which will affected:									
a. Inundation area (If the project result in inundation)									
2. Will the activity affect the potential use or extraction of an indispensable or scarce mineral or energy resource? YES ____ NO X									
If YES, specify type affected.									
3. Will the activity affect the potential use or extraction of an indispensable or scarce mineral or energy resource? YES ____ NO X									
If YES, specify resource affected and approximate amount.									

D. Water Quality and Quantity

	Direct	Indirect	Short Term	Long Term	Reversible	Irreversible	Severe	Moderate	Insignificant
1. Will the activity affect the quality of water resources within, adjacent to, near the activity area? YES ___ NO X If YES, specify water resource affected and amount in gallons/day. a. Quality and Quantity									
2. Will the activity result in a deleterious effect on the quality of any water resource areas or watersheds? YES ___ NO X If YES, specify water resource that might be affected.									

	Direct	Indirect	Short Term	Long Term	Reversible	Irreversible	Severe	Moderate	Insignificant
a. Will the activity affect the water supply downstream irrigation (if applicable) If YES, specify possible substances causing effects. YES NO X									

E. Air Quality/Atmospheric Environment

	Direct	Indirect	Short Term	Long Term	Reversible	Irreversible	Severe	Moderate	Insignificant
1. Will the activity affect the air quality in the project area, immediately adjacent areas, or the regional airshed? YES ___ NO X If YES, specify possible substance affecting air quality.									

F. Noise/Sonic Environment

1. Will the activity result in the generation of noise? YES X NO ___

   If YES, specify noise source.

G. Community Facilities/Services

	Direct	Indirect	Short Term	Long Term	Reversible	Irreversible	Severe	Moderate	Insignificant
1. Will the proposed activity result in changes in community facilities, services or institutions? YES ___ NO X									
If YES, specify facilities/services/institutions affected:									
a. School, medical center, electricity, water supply									
2. Will the proposed activity result in changes in the supply of, or demand for, infrastructure? YES ___ NO X									
a. Facilities									

BEST AVAILABLE COPY

BEST AVAILABLE COPY

H. Community Structure

		Direct	Indirect	Short Term	Long Term	Reversible	Irreversible	Severe	Moderate	Insignificant
1.	Will the proposed activity relocate existing community facilities, business enterprises and housing? YES ___ NO X									
	a. Resettlement project									
	If YES, specify potential community facilities, business enterprises, and housing areas affected:									
2.	Will the proposed activity substantially change the income, racial, ethnic or age distributions of the neighborhood and community? YES ___ NO X									
	If YES, specify areas/changes									
	a. Income.									
3.	Will the proposed activity result in changes in community population? YES ___ NO X									
	If YES, estimate what the population change will be as a percentage increase/decrease of the existing population. Indicate increase or decrease, and percentage change.									
	a. Percentage change unknown									
4.	Will the activity result in potential conflicts or impact physical, demographic or attitude/value cohesion? YES ___ NO X									
	If YES, specify impact:									
5.	Will the activity result in impacts to lifestyle or values systems? YES ___ NO X									

BEST AVAILABLE COPY

I. Open Space and Recreation	Direct	Indirect	Short Term	Long Term	Reversible	Irreversible	Severe	Moderate	Insignificant
1. Will the activity affect the condition, use of or access to any space and/or recreation areas? YES ___ NO X									
Are any mitigation or enhancement measures foreseen to compensate for the above sated impacts? YES X NO ___ Explain below.									
3. Will the activity create new opportunities for recreational experiences? YES ___ NO X									
If YES, specify.									
a. Reservoir-related recreation									

J. Historic Resources	
1. Will any site or structure of historic significance be affected?	Yes ___ No X
2. Will any known archaeological or palaeontological site be affected by the activity?	Yes ___ No X

K. Visual Resources	Direct	Indirect	Short Term	Long Term	Reversible	Irreversible	Severe	Moderate	Insignificant
1. Will the activity cause a change in the visual character in or near the activity area through alternation of natural or cultural features? YES X NO ___	X			X					X
If YES, specify natural and cultural features that may be changed. a. Natural Forest to industrial (geothermal power plant) site.									
2. Will the activity affect views or access to views of natural or cultural landscape features? YES X NO ___									
If YES, specify viewshed affected. a. Natural Forest will host power plant development									
3. Will the activity introduce new materials, colors, and forms to the immediate landscape? YES x NO ___									
If YES, specify. Power plant structures will rise in a forest area.									

BEST AVAILABLE COPY

L. Economics and Environment	Direct	Indirect	Short Term	Long Term	Reversible	Irreversible	Severe	Moderate	Insignificant
1. Will the proposed activity cause elimination or relocation of existing commercial and industrial enterprises? YES ___ NO X									
2. Will the activity cause generation of reduction in employment? YES X NO ___	X	X		X					
3. Will the proposed activity affect property values and local tax revenues? YES X NO ___									
If YES, specify potential effects. Increase in income and realty taxes									
a. Irrigation District									
4. Will the proposed activity affect local expenditures for infrastructural services (sewer, water, etc.)? YES ___ NO X									
5. Will the proposed activity effect the local regional economics? YES X NO ___									
a. Increase of the local revenues									
6. Will the activity cause an increase or decrease in seasonality of employment? YES ___ NO X									
If YES, indicate which and state occupation and groups affected.									
a. Farmer-irrigation									

BEST AVAILABLE COPY

M. Planning Coordination and Growth	Direct	Indirect	Short Term	Long Term	Reversible	Irreversible	Severe	Moderate	Insignificant
1. Will the activity require a variance from or result in a potential violation of any statute, ordinance, by-law, regulation, or prevent or minimize damage to the environment? YES ___ NO X									
If YES, specify variance and/or statutes.									
2. Will the activity stimulate additional local and regional land use development? YES ___ NO X									
If YES, specify extent and scale(s).									
a. Land use-irrigation									
3. Are there any other development planned which are or will be impacted by the proposed activity including those beyond the control of the submitting agency? YES ___ NO X									
If YES, specify other development affected.									

Source: Application and Evaluation of EIA Methodologies Using A Small Dam/reservoir Case Study, presented to the Intercountry Workshop on Rapid Techniques for Environmental Assessment in Developing Countries, Asian Institute of Technology, Bangkok, 1-5 February 1982.

BEST AVAILABLE COPY