PD-ABL-317

FORESTRY PLANNING & DEVELOPMENT PROJECT
Government of Pakistan-USAID

95426

CONSULTANT'S REPORT

ON

FOREST EXTENSION/OUTREACH

with emphasis on log grading rules

Submitted to:

FORESTRY PLANNING AND DEVELOPMENT PROJECT
Government of Pakistan/USAID
and
Winrock International

by
GARY G. NAUGHTON
Professor of Forestry
Kansas State University

30 April 1994

Winrock International
Technical Assistance Team
58, Margalla Road, F-7/2, Islamabad, Pakistan. Tel : 813262 -- 813272 Tlx : 54252 WIFPD PK Fax : 824519

CONSULTANCY REPORT
FOREST EXTENSION/OUTREACH

GARY G. NAUGHTON

25 MARCH-30 APRIL 1994

This was the second of two return consultancies of the Field Demonstration/Outreach Forester from the Phase II Technical Assistance Team, as part of the contractual arrangements between Winrock International, USAID, and the Government of Pakistan. It covered a total of 31 working days (GOP schedule) between the above dates.

Overview:

The purpose of this consultancy was to continue earlier efforts in development and delivery of extension information for project cooperators (farmers, foresters, and industrialists) about the production and marketing of farm trees, with particular focus on the higher value hardwood special market products; **veneer, plywood, match stock and special sporting goods stock.**

The Director General/PFI assigned Mr. Asif Jah, Lecturer in Forest Products, as local counterpart for this consultancy. The selection was a good one. Asif was very effective and fully cooperative in making this assignment successful.

Specifics of the Scope of Work will be found on the last page of this report.

Accomplishments
(from the Scope of Work):

1. Develop farmer and forester guides on conversion rules and log grades.

a.) Prepared **"FPDP Technical Note # 14 - Hardwood Veneer Log Grading"** as an interim guide. This was based on previous work by the International Organization for Standards (ISO) and the Food and Agriculture Organization of the United Nations (FAO) to try to standardize sawlog grades for Pakistan, plus in-factory interviews with the industries and on-site visits to private and government timber depots.

b.) Prepared four **"Tree Farmer's Guides"** in English with Urdu translation, ready for printing:

No.17 - Poplar Log Grades
No.18 - Mulberry Log Grades
No.19 - Shisham Veneer Log Grades
No.20 - Semal Peeler Log Grades

c.) **Willow** grading standards for cricket bats, although very similar to the standards developed for poplar cricket bats, were omitted from these publications because there is not yet a recognized demand for domestically produced willow. We did, however, cut one 8-year-old **English bat willow** from the older test planting of the species at Changa Manga. This specimen, measuring 60" length and 10" diameter showed the desired pale pink coloration and solid, defect-free wood which is in high demand by industry. **Technical** qualities of the wood is being tested by **Malik Sports** at Sialkot to compare how it measures up to imported stock from Europe.

Copies of all 5 of these publications are found in Appendix A of this report.

2. Conduct workshop(s).

a.) On 18 April we held a log grading workshop at the Forest Department Depot, Mardan, for farmers, timber contractors, middle men, and forest officers covering the current log grading standards in industry for **shisham, poplar, and mulberry.** 40 people attended.

b.) On 25 April we held a shisham veneer grading workshop at Changa Manga for industrialists and forest officers to discuss technical requirements of a **shisham veneer log grading system**; 35 people attended.

Both of these workshops were well attended by all sides of the wood production/utilization linkage; they participated fully, asked important questions, and helped to provide answers for the improved management, selection, and marketing of high value hardwood timber products.

3. Outline of Workshop on Extension Organization.

In meetings with the O/IGF it was generally agreed that some concrete advances have been made during the past ten years toward the development of extension forestry people and organizations. However, further development is confused and/or stifled to some extent by the continuing involvement of externally funded **projects** which, in many cases, super-impose some standard of organization which neither fits the current departmental organizations, nor offers any permanent adaptation of those organizations.

Current extension programs which are still in the early stages of change in some cases are: the **permanent** position of CF Extension in Punjab (Lahore); the recently created position of CCF Social Forestry/Extension in NWFP; and the CF and 5 DFOs in Extension in the Sindh Forest Department. **All** of these are seen to be internal changes which are expected to stay in their respective departmental organizations **after** existing projects are closed out.

As is the case with other forestry activities, the extension forestry issue is one of **provincial** authority and responsibility, and it is **most unlikely** that there will be one model organizational structure which would be accepted by all the provinces. That should not prevent further effort to develop and improve these organizational approaches.

It is our recommendation that **separate workshops** for extension forestry organization should be held in each Province which wishes to **institutionalize extension forestry.** To the greatest extent practicable, these workshops should be organized under the leadership of the appropriate Secretary with direct input from the CCF(s), existing Extension Foresters, and representatives of the Provincial Planning Departments. A recommended agenda is found in Appendix B of this report.

4. Outline of Continuing Education workshops in Forestry Extension.

Continuing Education is recognized by most educational institutions as one of the fundamental missions which needs to be addressed. It not only helps to update alumni in new concepts, technology, and research findings, it also serves to update the **institution** by periodically dealing with problems brought in by the alumni. PFI has recognized this importance, and has set up a catalog of Con-Ed shortcourses, 32 in number, covering a broad range of subjects and suited to the interests of people from a wide range of educational background. For example, **half** of the courses are open to people without formal education in forestry.

The operational difficulty with establishing shortcourses in Forestry Extension is that, whereas all of the existing courses are offered by individual academic or research departments, there is no department of **extension forestry** and, consequently no institutional "home" for such courses.

Abbreviated syllabi four **3 shortcourses** are included as Appendix C of this report. They are, by title:

- **SOLAR DRYING OF LUMBER**
- **DESIGN AND MANAGEMENT OF FARM WINDBREAKS**
- **AGROFORESTRY SYSTEMS CASH FLOW ANALYSIS**

Personal Comments:

- Some technical difficulties were encountered as we tried to develop the Tree Farmer's Guides for these special value hardwood products. These were mostly related to some differences in the machinery available and the technical capacity of some mills, which in some cases set artificial limits on log size. Some of the mills

also had too high expectations for log quality and size, and there was a tendency on the part of the log buyers to provide too much detail as to their preferred grade standards. **Simplification** of technical details is the key to effective extension work, so we focused on those key elements of the grading rules which will have the greatest impact on the market. This, however, establishes them as interim guides.

- Especially in the case of shisham veneer logs, Punjab Forest Department had already started to allow for cutting of some of their better **Ist R** sawlogs at the 8'-6" length since the last consultancy in fall 1993. This is an encouraging sign that the leadership is willing to adopt new standards once the importance of those standards is clearly understood. The potential additional value recovery of this change is **enormous**: First Class shisham veneer logs are selling at auction for as much as Rs 1300/cft at Changa Manga as compared to Rs 450-550/cft if the same logs would be cut too short (less than 8'-6") for veneer.

- In the case of the NWFP Forest Department, a complaint was made that the narrow trails in and out of the canal side plantations do not allow for the cutting of shisham logs in lengths **greater than 7 feet!** This is an example of the rigid thinking which is too prevalent among forest officers. It was suggested that, in the case of narrow trails, the tractor trolley could be loaded with the logs lengthwise instead of crosswise so they could be properly transported in longer lengths. This suggestion is **not** expected to be taken up immediately.

- A special lecture was presented to the MSc Junior Class at PFI, arranged by Asif Jah, on the subject of how log grading standards are developed to meet industrial needs, why they are important, and how foresters can adapt management plans to keep abreast of new standards in the market place.

Followup needed:

The following suggestions are made for followup or future action by PFI:

1. Conduct laboratory tests on shisham planks and veneers which are dis-figured by **calcium carbonate** (and other?) salt deposits in the wood. These spots are a cause of degrade of finished Ven-board from A to B -- about 15% loss in value. We tested some of this wood, in the mills, using ordinary water and ordinary table vinegar (3.5% acetic acid). The results with the vinegar were promising, although it is apparent that a stronger acidity is required to do the thorough job. For a start, 10% acetic acid and 5% carbolic acid should be tested to see if they can be effective and safe to use with bare hands in a factory situation. Other possible solutions should be tried as well, keeping in mind that the industries need something readily available, non-toxic, and

economical for this problem.

2. Conduct laboratory tests on "second growth" poplar (coppice) to determine if it is technically different from first growth wood; especially the problem is a complaint from the match industries that this wood is too dense for proper peeling and splinting. Samples are available any time from the match factories in the Jamrud Industrial Estates, Peshawar.

3. PFI should acquire some of the **cricket willow** from Changa Manga and some imported (from Europe) willow from one of the Sports industries in Sialkot, and run a full range of mechanical and technical tests in the Forest Products Lab. This is an important step in order to assure that the eventual report from Malik Sports is verifiable and consistent with independent tests. The potential value of producing acceptable **cricket willow** in Pakistan for manufacture of <u>first quality</u> bats for the international market is of tremendous scale. It merits careful and thorough study and development.

SCOPE OF WORK
Gary G. Naughton
Forest Extension/Outreach Consultancy
March 25 - April 30, 1994

Reinforce farmer-forester-industrialist linkages to improve the efficiency of marketing farm grown poplar, willow, mulberry, shisham and semal trees produced under the project. This will be accomplished by:

1. Develop four Farmer and Forester Guides on log conversion rules and log grade descriptions for the following species/products:

   - Poplar log conversion rules and log grade descriptions for match stock
   - Poplar and willow log conversion rules and log grade descriptions for cricket bat stock
   - Mulberry log conversion rules and log grade descriptions for hockey sticks
   - Shisham and semal log conversion rules and log grade descriptions for domestic veneer and domestic peelers for plywood

   These guides will be highly visual and will be developed in collaboration with members of the provincial forest departments, PFI and wood-using industries.

2. Conduct a workshop to train industrialists, forest officers and farmers in the use of the log conversion and log grade training materials.

3. Collaborate with the Office/Inspector General of Forests on the development of an outline and content for a workshop for senior forest officers on extension organization.

4. Collaborate with PFI in the development of an outline and content for one or more continuing education workshops in forestry extension for PFI graduates who passed out prior to 1989. The basis for these workshops would be built on the recommendations which have been suggested by members of the Forestry Extension Coordinators group.

Consultancy activities will be reported to USAID, GOP and WI orally and in a written report. The Farmer and Forester Guides will be ready for publication at the completion of the consultancy. The consultant will work a six-day week. Friday will be considered a holiday.

FORESTRY PLANNING & DEVELOPMENT PROJECT
Government of Pakistan-USAID

HARDWOOD VENEER LOG GRADING
(Interim Guidelines)

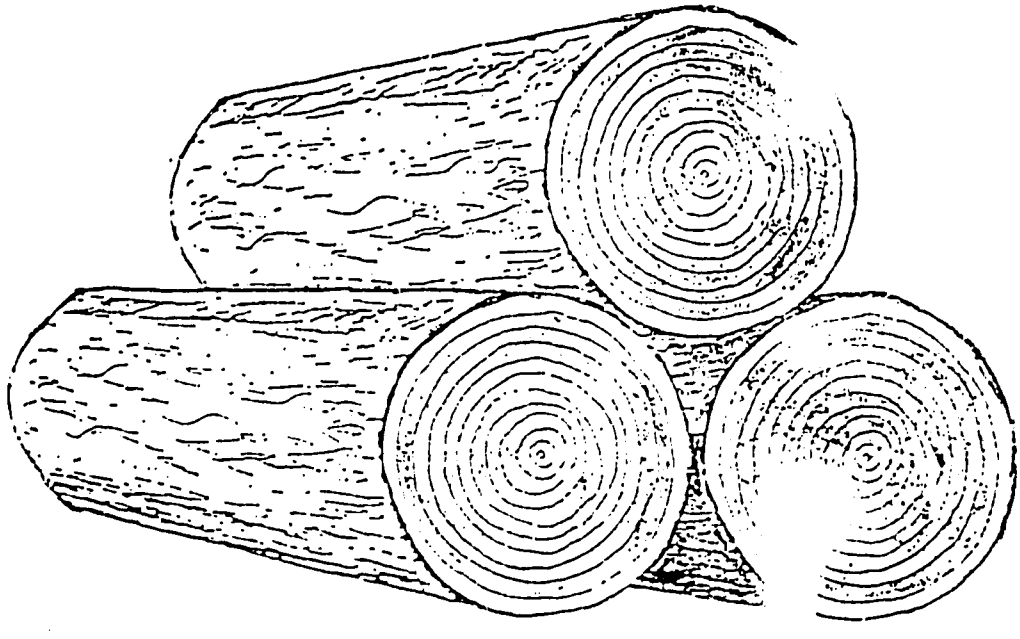

Technical Note No. 14
April 1994

Winrock International
Technical Assistance Team
58, Margalla Road, F-7/2, Islamabad, Pakistan. Tel : 813262 -- 813272 Fax : 824519

1

TECHNICAL NOTE # 14

HARDWOOD VENEER LOG GRADING
(Interim Guidelines)

by
Gary G. Naughton and Asif Jah[1]

BACKGROUND

Between 1970 and 1986, the **International Organization for Standardization (ISO)** developed a series of reports covering classification and grading standards for sawlogs which were eventually ratified as acceptable standards, world-wide, for international trade. This was later augmented, in 1987, by an FAO study to establish acceptable and useful **Pakistan Grading Rules for Logs and Sawntimbers (Proposed)**. Unfortunately, neither of these previous works dealt with grading rules and standards for **veneer logs**.

Although some Forest Department working plans have adapted part of the recommended **sawlog** grading standards, logs are not always segregated by grade at the sales depots and the buyers are still faced with the problem of purchasing mixed-grade lots of logs. Likewise, there has been very little effort on the part of industry to pay a **premium price for premium grade**. This leads to the problem of some logs being delivered to the wrong final user (from a **quality** point of view); causing some very high class logs to be made into low-value products, and causing some wood users to try to make high-value products from low class logs. In both cases, Pakistan is losing potential value added for its scarce raw material, industry is losing potential high-value markets, and producers are losing the opportunity to receive higher returns through good pruning, management and marketing practices.

This technical note was prepared from numerous factory site and depot evaluations of how the marketplace deals with all of the various factors of value by recognizing **veneer grades** for the various types of hardwood logs produced in Pakistan. A **grade** is a specified standard of quality which can be used to separate logs into groups of similar **value** and **utility**.

The descriptive standards presented here are offered as interim guidelines for the grading of hardwood veneer logs with the objective of capturing the highest possible **value recovery** and the highest **standard of utilization** for these special forest products. In any case, the **lowest** acceptable quality for a veneer log should be **higher** than the minimum acceptable quality standards for the highest grade sawtimber.

[1]The authors are, respectively; Consulting Forester, Winrock International (Technical Assistance Team), Forestry Planning and Development Project, Islamabad; and Lecturer in Forest Management and Forest Products, Pakistan Forest Institute, Peshawar.

8

Because each species has its own particular kind of use in the market, it also has its own particular **grade standards.** So, we will consider each species separately in this paper. **Shisham, poplar, and semal** are considered here, although other species could be treated in much the same way, if and when they achieve some demand recognition from the veneer market.

GENERAL CONSIDERATIONS

The value of the logs which may be cut from trees depends upon:

1. the **species;**
2. the **size;**
3. the **quality;** and
4. the **conditions of the market,** including distance to the factory, market demand, and the time of year.

Ideally, the first grading of the logs should be done **before the tree is cut** so that all of the surfaces ("faces") of the log can be easily examined to discover any defects. Then, trees which meet all of the specifications for a particular grade can be marked **before** felling, so that the proper length can be cut when bucking the logs.

Knots and limbs are the most serious defect to be considered in grading veneer logs. The size, number, kind and location of **knots** will be the most likely cause of degrade for potential veneer logs, regardless whether the log is large enough in length and girth, or straight enough in form. Visible **black or rotten knots** are never accepted in the veneer grade classes; when present, they automatically **degrade** the log to the sawlog grades.

When grading veneer logs it is extremely important to start by visually dividing the log into 4 longitudinal faces and determining if at least 3 faces are **100% clear** of visible defects. If this is not the case, the log should be classified as a sawlog or factory grade, **regardless of the size.** Visible defect is limited to only **one face,** and that face must be **85% clear,** with the limits on **knots** as specified by the standards for the species. The difference between a log with 4 clear faces (as under Ist Class) and a log with 3 clear faces (as under Ist R), is to **double the market value** of the clear log on a cubic foot basis.

Upon felling, the ends of the logs may also be easily examined to determine if there is any further grade defect to be considered. Finally, upon harvest and conversion, veneer logs should be carefully segregated from the other market grades of timber during the exploitation, and offered as separate lots to the market.

For stumpage sales, properly graded and marked veneer logs may be included in the overall sale or offered separately. The sale of small numbers of trees (less than 2 or 3 truck loads) usually does not justify separating the veneer logs from the sawlogs. In these

9

cases, the buyers will segregate the logs after felling for transport to separate markets.

SHISHAM

SHISHAM VENEER LOGS are the highest quality logs which are produced and, therefore, demand the highest value in the market. The veneer produced from **shisham** is used for production of ven-board for paneling and for the making of fine furniture. The factories making **shisham veneer** recognize two separate log grades, based upon the amount of **visible defect** in the logs.

These shisham veneer grades are generally in line with the established forest department grades for factory logs, so that a **1st Class Veneer log** will exceed the minimum standards of **Ist R**, and the **2nd Class Veneer log** will exceed the minimum standards for **IInd R.**

All **shisham veneer logs** must be straight, nearly cylindrical, sound, freshly cut with properly bucked ends and free of bullets, metal and stone fragments. Specifically:

First Class Veneer Logs
(minimum standards)

LENGTH: 8'- 6" (2.6 metres)
GIRTH (middle, over bark): 63" (1.6 metres)
SAPWOOD: less than 2" (5 centimetres)
KNOTS: must be free of all visible knots on 3 **faces**; the fourth face must be **85% clear** and may have white knots of **less than 1"** diameter (2.5 cm); no **black** or **unsound knots** are allowed.
OTHER causes for rejection from this class might be **butt swell, taper, blaze,** and **deep insect-holes.**

If a log fails to meet the minimum girth requirement, or if the girth is big enough but the sapwood averages **more than 2" wide** it will be automatically degraded to **Second Class Veneer**; failure to meet **any other** of these requirements will degrade the log to **Ist R (factory grade)**, or below.

Second Class Veneer Logs

LENGTH: Same as under First CLass Veneer
GIRTH: 53" (+)
SAPWOOD: may average more than 2" wide if girth is 63"(+); sapwood on smaller logs must be less than **2"**
KNOTS: Same as under First CLass Veneer

If a log fails to meet **any** of these minimum standards, it is **automatically degraded** to the sawlog grade classes (see FAO guide).

10

FIRST CLASS SHISHAM VENEER

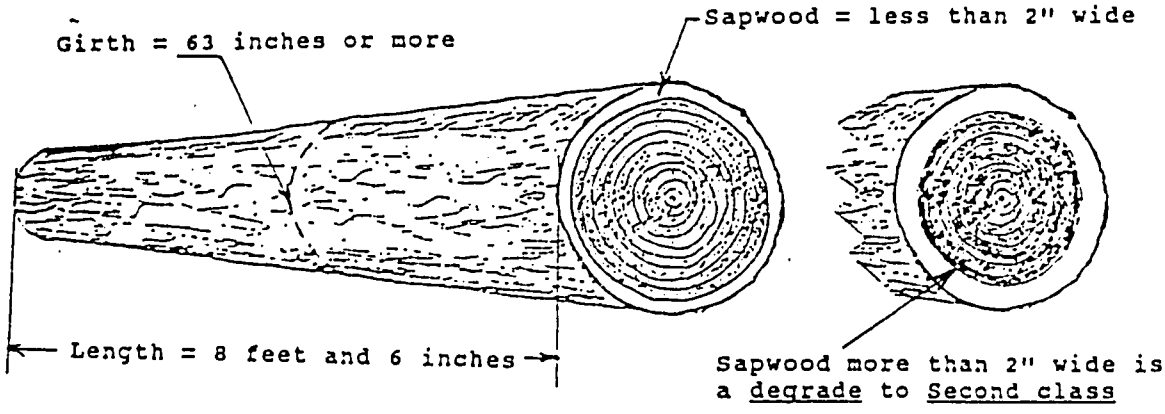

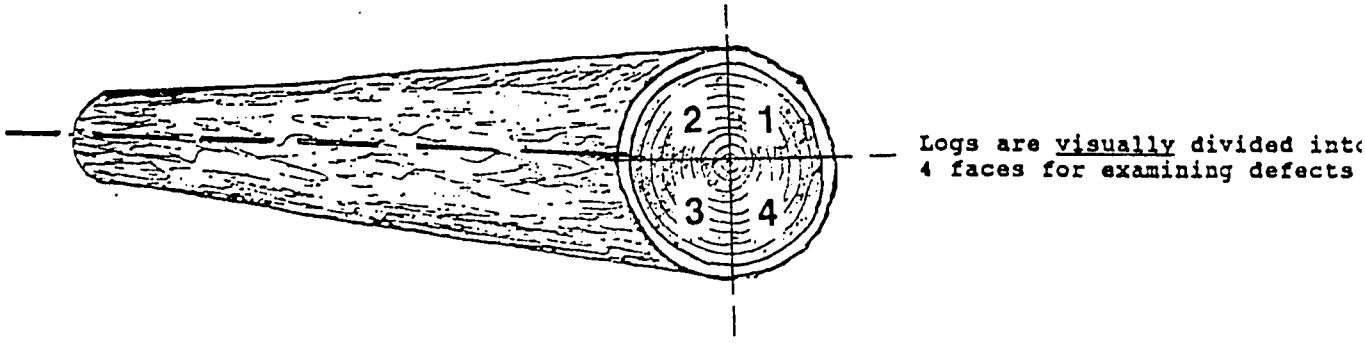

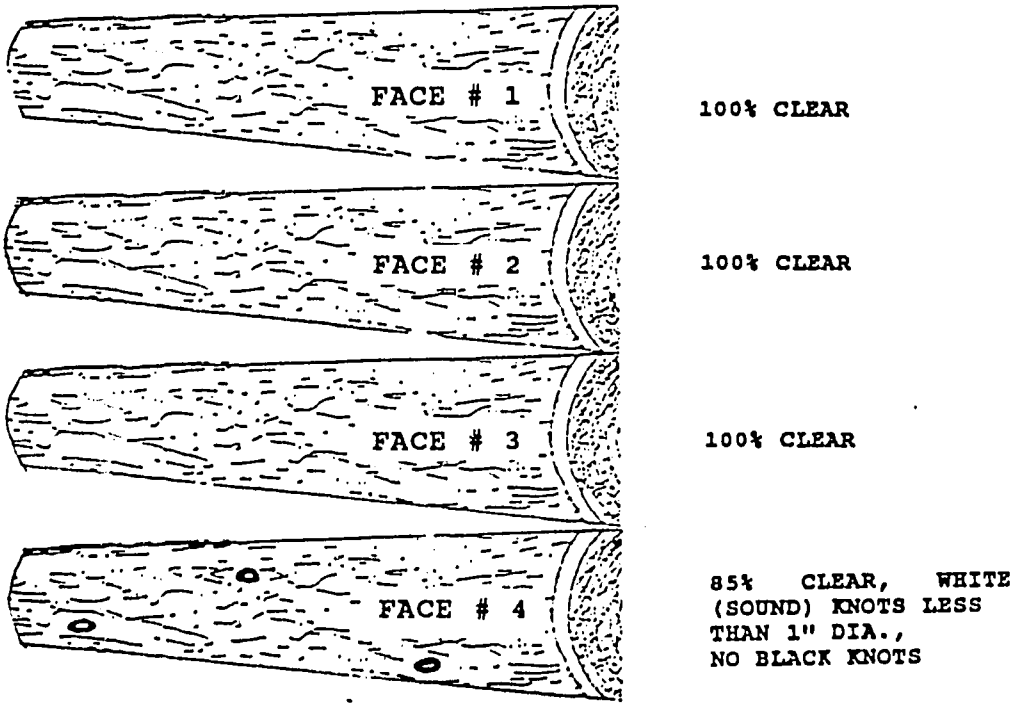

POPLAR

POPLAR MATCH-BOLTS are presently in high demand by the match factories. Because the factory process starts with the cutting of **peeled veneer** from small bolts, the greatest quality concern of the market place is to encourage **early and regular pruning** of young poplar trees to produce clear, knot-free wood.

The match factories buying poplar match-bolts recognize two separate grades, based upon **size** and amount of **visible defect** in the bolts. However, because poplar match-bolts are currently being purchased on a **weight** basis (price per maund) the usual factory practice is to grade these match-bolts by the **truck load**, paying premium of up to **15%** for loads grading "above average" and deducting as much as 15% from the standard price for loads which are "significantly below average" in quality. The specific **quality** guides are not written down and are not uniformly applied by all the match factories, but at least some of them are attempting to teach their contract suppliers of the necessity to bring in higher quality bolts, and rewarding them with higher prices.

In any case, all **poplar match-bolts** must be straight, nearly cylindrical, sound, and freshly cut with properly bucked ends. No visible amount of heart rot is allowable because it will cause the lathe chucks to fail during the peeling process. Specifically:

First Class Match-bolts
(minimum standards)

LENGTH: 60" (or multiples of 15"); **or** 52" (or multiples of 26") depending on the factory
DIAMETER (small end): 9" **minimum** and 14" **maximum**
COLOR: white; brown heart or other discolorations **must not** extend beyond the core diameter of 2.5".
TEXTURE: growth rings (average) 3/4" (2 cm) or wider
KNOTS: a 15" section must be free of all visible defects on **3 faces**; the fourth face may have up to 3 flush or overgrown sound knots of **less than 1"** diameter (2.5 cm); no **black** or **unsound knots** are allowed.
PITH: must be on-center.

Second Class Match-bolts

LENGTH: Same as under First Class Match-bolts
DIAMETER (small end): 5" **minimum** up to 9"
COLOR: Same as under First CLass Match-bolts
TEXTURE: growth rings average 1/2" to 3/4" wide
KNOTS: Same as under First Class Match-bolts
PITH: Same as under First Class Match-bolts

POPLAR PEELER LOGS are being used by plywood factories to make **rotary cut** veneer for the interior layers (plys) in **plywood.** Because of its toughness and light weight, poplar is one of the

12

more desirable hardwoods for interior plys. However, its plain and unattractive grain makes it less desirable for the exterior face(s) of plywood. As a result, **poplar peeler logs** for plywood may contain many sound defects which would not be tolerated in either the match industries or in the ven-board factories.

At present (1994) only one grade of **poplar peeler logs** for plywood veneer is recognized; an individual log is either **accepted** or **rejected.** In the future, as significant numbers of poplar trees are available in larger diameters, some grade differentials on the basis of **girth** will probably come into effect (as is the case with semal peeler logs). Whenever that time comes, it will first be noted by an increase in the factory offering price for the larger size logs. Current standards for **poplar peeler logs** are:

LENGTH: 4'-6" (half log) **and** 9' (full log)
GIRTH (mid-point): 36" (+)
KNOTS: will accept sound (white) knots less than **2" dia.**; no black or rotten knots accepted
CORE: must be solid and sound, capable of holding lathe chucks
COLOR: no defect

Prices (ex-factory) for poplar peeler logs in 1994 are at **45%** to **65%** above the average prices being offered for match-bolts. This fact, coupled with the lower quality standards, especially in reference to knots, makes the production of **poplar peeler logs** very attractive to farmers. The big difference relates to the **girth requirements** for peelers which means that more time will be needed to produce an acceptable log.

Many farmers will elect to continue to produce match-bolts because of the shorter time required; **but**, any significant over-supply of match-bolt stock in the near future which is sufficient to cause time delay in harvesting will produce bigger poplar trees which will find their way to the plywood mills.

Once this market is better known and understood by farmers, they will choose to grow their **primary** poplar crop for plywood and will put only thinnings and second logs into the match-bolt market. This will force the match factories to raise their prices to stay competitive, and the producers will gain economically.

SEMAL

SEMAL PEELER LOGS are in steady and high demand for the manufacture of plywood. The bright color, light weight and soft, even texture makes **semal** an ideal raw material for this purpose. It has the additional advantages of fast growth, and naturally straight and cylindrical form.

13

Selected **First Class Peelers** are used for the surface veneer on certain plywood grades; but because of its soft texture, **semal** is normally used for the internal plys (layers) under harder textured kinds. In this case, common defects such as discoloration, sound knots, and other surface blemishes are normally not a cause for **degrade** of the logs, because they do not reduce the strength and soundness of the plywood, and do not show on the surface to cause degrade of the finished plywood.

Butt logs of semal frequently have large root swells extending as much as half way up the log from the stump level. These root swells ("flutes") should be cut off during the process of bucking the logs at the time of felling. Cutting them flush with the sides of the log generally restores the log to its desired cylindrical shape. These root swells are not considered as a defect **unless** their growth form causes significant amounts of bark inclusions in the sapwood of the log.

All **semal peeler logs** must be straight, nearly cylindrical, sound and freshly cut with a **saw**. No heart rot or soft core is allowed because it will cause the lathe chucks to fail during the peeling process. Specifically:

First Class Semal Peelers
(minimum standards)

LENGTH: 8'-6", **or** 7'-6"
GIRTH (midpoint): 60"+
KNOTS: 85% clear; sound (white) knots less than **3" dia** are accepted; no black or rotten knots accepted
COLOR: bluestain or other fungus related dis-coloration will **degrade one class**

Second Class Semal Peelers
(minimum standards)

LENGTH: (same as First Class)
GIRTH: **49" to 59"**
KNOTS: (same as First Class)
COLOR: (same as First Class)

Third Class Semal Peelers
(minimum standards)

LENGTH: 4'-6" **or** 9'
GIRTH: **36" to 48"**
KNOTS: (same as First Class)
COLOR: (same as First Class)

GLOSSARY OF TERMS

alien inclusion (hardware): Foreign bodies of non-wood origin which are included within the wood such as: stone, wire, bullet, nail, metal fragments, etc.

blaze: Damage to the heartwood by overgrown or partially overgrown demarcation marks or other mechanical damages which cause disfigurement or discoloration of the heartwood.

clear: The space (area) on the surface face of a log which lies between visible defects; often described as a **percent** of defect-free surface.

defect: Any feature of the log which decreases the technical value of the wood that can be produced from it.

grade defect: Abnormalities such as knots, discoloration, etc., which cause a **quality degrade** without necessarily affecting scale or volume yield from the log (see **degrade**).

scale defect: Abnormalities such as shake, breakage, rot, deep insect-holes, excessive curvature, etc., which decrease the volume yield of sound wood from the log; may not affect the **grade** of sound wood in some cases.

degrade: relegation to a lower grade because of failure to meet the minimum established standards of a higher grade.

diameter (dia): The straight distance across the end of the log, through the center, measured <u>under bark</u>; if the end is not round, this is an average of the longest and shortest measurements and is usually expressed as:

log diameter: an estimate of the mid-point diameter of the log, obtained by <u>averaging</u> the diameters of the large and small ends; or

diameter-inside-bark (d.i.b.): the diameter at the smaller end of the log (under bark).

double (multiple) pith: The end of the log shows more than one pith trace with corresponding distortion of the growth rings, usually causing **ovality** of the log at that point.

fresh: A quality judgment based upon visible appearance of the log; fresh logs have tight bark and bright color on the ends.

girth: The circumference distance around the log at mid-point between the two ends, measured <u>overbark</u>.

15

heartwood stain and streak: Zones of heartwood discoloration without reduction in wood hardness, caused by early stages of wood coloring or wood destroying fungi;

blue stain: Blue, blue-gray or black discoloration of the sapwood, sometimes with greenish tinges, indicating fungal contamination.

hollow: A cavity appearing in part of the growing tree as a result of the full destruction of the wood by fungi.

insect-holes: Tunnels and holes left in the wood by insects. According to the depth of penetration, insect-holes are subdivided as surface, shallow, and deep:

surface insect-hole: extending not more than 3 mm below the wood surface;

shallow insect-hole: extending not more than 15 mm below the wood surface;

deep insect-hole: extending more than 15mm below the wood surface. According to the diameter, deep insect-holes are further subdivided into small and large:

small insect-hole: not more than 3mm in diameter;

large insect-hole: more than 3mm in diameter.

knot: The portion of a branch embedded in the wood of the trunk. According to the degree of enclosure, knots are divided into flush knots and overgrown protruding knots:

flush knot: a knot exposed on the side surface of the log. According to their condition, flush knots are further divided into sound, unsound, and rotten knots:

sound knot (also known locally as **white knot**): a knot showing no indication of decay;

unsound knot (also known locally as **black knot**): a knot with rot which occupies not more than one-third of its cross-sectional area; it may be black or discolored even if apparently tight;

rotten knot a knot with visible rot covering more than one-third of its cross-sectional area.

overgrown protruding knot: a knot which is not exposed on the side surface of the log, which may be detected by traces of overgrown bark (bump, swelling, stain, or irregular bark pattern).

16

length: The straight distance along a line parallel to the central axis of the log from one sawn end to the other; in the case of axe-cut or broken ends, length shall be measured at a point further into the log which will allow for vertical cut with a saw to remove the wasted portion.

match-bolt: Freshly cut poplar short logs in multiples of 15" length (usually 60") for manufacture of match sticks.

off-center pith: The pith trace of the log is not in the geometric center of the log cross-section, causing compression of growth rings on one side, and sometimes relating to **ovality** of the log.

ovality: The shape of an end cross-section of the log in which the log is not round and the greater diameter differs significantly from the lesser diameter.

quality: A class of values for wood products determined by meeting or exceeding the minimum requirements of a grading standard.

rot: Zones of wood with abnormal coloration and some degree of noticeable reduction in wood hardness or cell destruction; it may occur as **sap rot** or as **heart rot**.

round: The shape of the end cross-section of the log in which the smallest diameter of the end is at least 90% of the size of the largest diameter of the same cut. (The opposite is sometimes measured as <u>ovality</u>).

sawlog: A log which is used for production of sawn boards, planks and lumber; may be classified into various **grades** according to size, soundness, quality and market requirements.

shake: A separation of the wood fibres along the grain. According to position inn the log, shakes are divided into end and side shakes:

end shake: Shake appearing on the end but not on the side of the log; sub-divided into:

heart shake: radial shake extending outward from, or across, the pith or center of the log; and

ring shake: shake which occurs as a separation between one or more pairs of annual rings, and following the curvature of the rings.

side shake: Shake appearing on the side surface of the log and extending inward toward the center.

sound: Logs with visible scale defects amounting to less than 5% of the volume of the log shall be considered as **sound**.

straight: Logs which curve less than one-tenth (10%) of their smallest diameter over the entire length of the log shall be considered as **straight.**

twist (slope of grain): Spiral grain as shown by the mis-direction of the bark pattern on the surface of the log to the extent that it exceeds 1 inch of deviation in 4 feet.

taper: Gradual decrease of the log thickness along the length of the log; logs with minimum taper are nearly **cylindrical.**

ven-board: A manufactured sheet or panel with decorative veneer surface over a core of particle board, plywood or other lower grade material to give it form and strength.

veneer log: The highest quality classification for market logs; veneer logs are used in industry to produce thin sheets, cut by a lathe knife instead of a saw, to be used as individual layers in the production of plywood, or as the outer facing sheets over particleboard or blockboard core stock. Veneer logs may be further subdivided (by factory process) as:

slicers: Logs which are used to produce flat, longitudinal individual veneer sheets (as with shisham) which is primarily used as decorative facing material for paneling and furniture; and

peelers: Logs which are used to produce continuous rotary cut veneer sheets by rotating the log against the lathe knife, producing flat grain veneer as the cutting proceeds around the cylinder of the log, roughly following the growth rings (as with poplar and semal).

volume: The solid wood content of a log, expressed in cubic feet (cft); calculated as:

$$V = L \times \frac{G^2}{1800} \quad ;$$

where: V is volume in cft;
L is length in feet;
G is girth in inches; and
1800 is a constant value

18

BIBLIOGRAPHY

International Organization for Standardization (ISO). 1985. "Coniferous and Broadleaved Tree Sawlogs- Visible Defects Classification (draft)", ISO/DIS 4473-4475.

Rakhman, Dani. 1987. "Pakistan Grading Rules for Logs (Proposed)", FAO Working Paper FO: RAS/78/010, Kuala Lumpur.

Rakhman, Dani. 1987. "Pakistan Grading Rules for Sawntimbers (Proposed)", FAO Working Paper FO: RAS/78/010, Kuala Lumpur.

Wenger, Karl E. (ed.).1984. "Forestry Handbook", Second Edition (for the Society of American Foresters), John Wiley & Sons, New York, 1335 pp.

TREE FARMERS GUIDE

MARKET GRADES FOR POPLAR

17

POPLAR MATCH-BOLTS:

Timber contractors are buying poplar trees on a regular basis to supply the match factories. This guide describes the standards for grading match-bolts, so you will know how to grow a better tree to fetch a better price.

A **grade** is a specified standard of quality which can be used to separate logs into groups of similar **value** and **utility**. The most important grade standards which can be controlled by farmers are: **diameter** of the bolt and the defects caused by **knots**.

There are two separate grades for **poplar match-bolts** based upon **size** and amount of **visible defect** in the bolts. All **poplar match-bolts** must be straight, nearly cylindrical, sound, and freshly cut with a saw. No visible amount of heart rot is allowed.

First Class Match-bolts

(minimum standards)

LENGTH: 60" (or multiples of 15"); or 52" (or multiples of 26") depending on the factory

DIAMETER: 9" minimum and 14" maximum

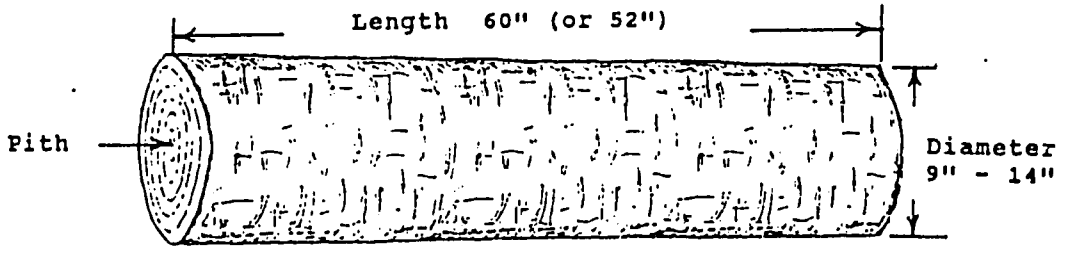

KNOTS: a 15" section must be clear on **3 faces**; the fourth face may have **3** sound (white) knots of **less than 1 inch** (thumb size); no **black** or **unsound knots** are allowed.

COLOR: white; brown heart or other discolorations **must be** within the waste core diameter of 2-1/2 inches.

TEXTURE: growth rings (average) 3/4" or wider.

PITH: must be on-center.

Second Class Match-bolts

(Same as for First Class, except DIAMETER will be 5" minimum up to 9" maximum)

Larger diameter will put the bolt in **First Class.** Growing **poplar** trees 12' to 18' apart for 7 or 8 years will produce **bigger** trees of higher value in less time.

Limbs on the trunk of the tree produce **knots** in the wood; these knots are the biggest cause of **defect** in match-bolts. Regular and repeated **pruning** of small branches will produce **First Class match-bolts.** Proper pruning technique is shown in TREE FARMER'S GUIDE No.2.

POPLAR CRICKET-BOLTS:
Some of the Sports Factories in Sialkot are making practice quality cricket bats for youngsters from **poplar wood.** The price paid for cricket-bolts is higher than for match-bolts because the wood must be **absolutely clear of knots.** If you are growing poplar trees for match-bolts, some of the **very best** bolts can be sold to the **cricket** market. Minimum size requirements for **poplar cricket-bolts** are:

LENGTH: 60" (some mills require 54" only)
DIAMETER: 12" up to 24" maximum

POPLAR PEELER LOGS:
Plywood Factories are using **poplar** rotary cut veneer for the interior layers (plys) in **plywood.** In this case, common defects such as discoloration, sound knots, and other surface blemishes are normally not a cause for **degrade** of the logs, because they do not reduce the strength and soundness of the plywood, and do not show on the surface to cause degrade of the finished plywood.

All **poplar peeler logs** must be straight, nearly cylindrical, sound, and freshly cut. No heart rot or soft core is allowed.

Poplar Peelers must meet the following minimum standards:
LENGTH: 9' or 4'-6"
GIRTH: (midpoint overbark): 36"+
KNOTS: white or sound knots accepted, black knots rejected

---

his leaflet is sponsored by the *Forestry Planning and evelopment Project*, a joint project of the Government of kistan & the United States Agency for International evelopment.

r additional professional assistance in managing your tree crop, ntact the Project Officer nearest to your area:

mjab.
Conservator Forests/Project Director FPDP
Swan Camp, Islamabad.
Telephone: 8471403

NWFP.
Conservator Forests/Project Director FPDP
Shami Road, Peshawar.
Telephone: 76489

Balochistan.
Conservator Forests/Project Director FPDP
Dear Murad Jamali, Dist. Naseerabad.
Telephone: 401 or 426

Sindh.
Conservator Forests (Extension)/PD FPDP
Shahbaz Building, Hyderabad.
Telephone: 20922

Azad Kashmir.
Chief Conservator of Forests
Azad Government of Jammu and Kashmir
Muzaffarabad.
Telephone: 3806

Produced by Winrock International-58 Margalla Road, F-7/2, Islamabad, Telephone 813262
Author-Gary G. Naughton, Computer Layout-Haroon Abbasi
April 1992 - 1,000

TREE FARMERS GUIDE

MULBERRY LOG GRADES

18

The Sports Factories in Sialkot provide a constant market demand for high quality mulberry logs for the making of hockey sticks. This is an important export from Pakistan into the international marketplace, and farmers are encouraged to grow mulberry trees for this market.

Mulberry logs are bought on the basis of 3 quality grades; each grade has a different market price per cubic foot (cft). All logs must be straight, sound and freshly cut with a saw.

First Class Hockey Logs

(highest value)

LENGTH:	6 feet (72")
GIRTH (middle):	60" (+)
TEXTURE:	growth rings should average 1/3" to 1/2" wide
KNOTS:	3 faces (sides) of the log must be 100% clear; the 4th face may have white knots up to 3/4" diameter if at least 24" apart, no black knots will be accepted.

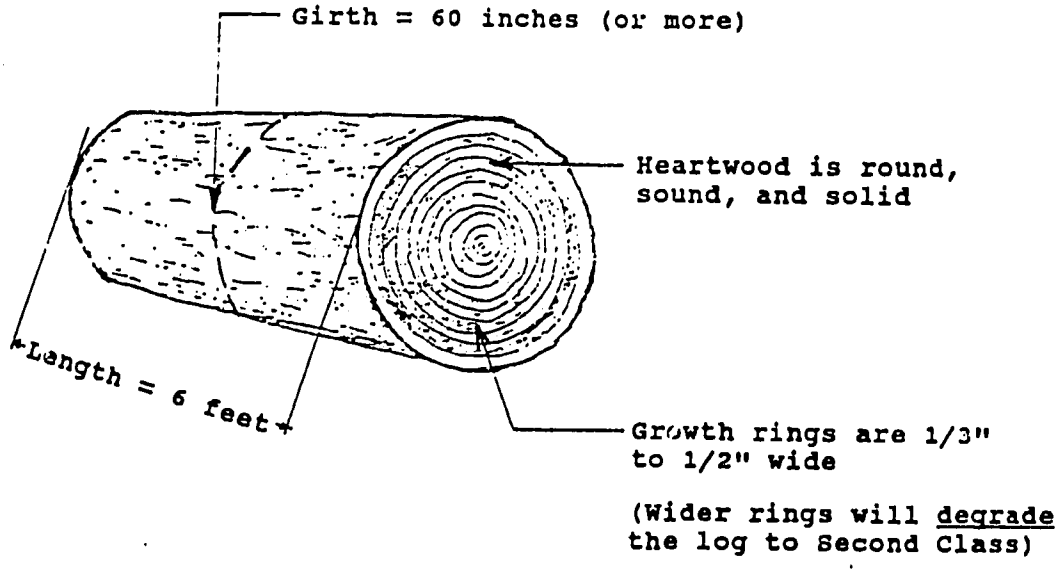

Second Class Hockey Logs

(75% of highest value)

LENGTH:	6 feet (72")
GIRTH:	38" up to 59"
TEXTURE:	growth rings average less than 3/4" wide
KNOTS:	same requirement as under First Class Hockey

Third Class Hockey

(25% of highest value)

LENGTH: 4 feet; 4½ feet; 5 feet; 5½ feet; or 6 feet.

GIRTH: 18" (+)

KNOTS: white (sound) knots accepted on all faces if not over 1" diameter and at least 24" apart.

MANAGEMENT OF MULBERRY:

The quality grades for hockey logs are mostly related to the log size and the knots in the wood. Both of these problems can be solved by the Tree Farmers through proper care and management.

You should always keep the main trunk pruned clear of branches, starting as soon as the trees are 2 years old, so that the highest quality wood can be grown. Lopping of the tops and branches for fodder, fuelwood, or silkworm culture will cause the tree to develop rot or discolored streaks in the wood and to grow more slowly.

The best quality trees should be kept in the plantation until they are at least 60 inches in girth - large enough to meet the grade standards for First Class. You can measure these trees with an ordinary tailor's tape, or if you can reach around the tree and touch your fingers it is probably to small to make the grade. First Class Hockey Logs normally come from trees which are more than 15 years old.

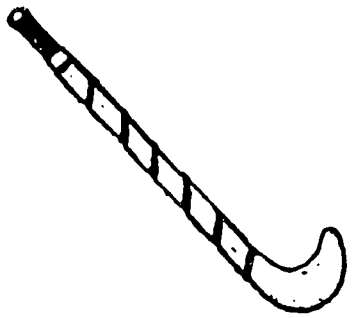

This leaflet is sponsored by the *Forestry Planning and Development Project*, a joint project of the Government of Pakistan & the United States Agency for International Development.

For additional professional assistance in managing your tree crop, contact the Project Officer nearest to your area:

Punjab.
Conservator Forests/Project Director FPDP
Swan Camp, Islamabad.
Telephone: 8471403

NWFP.
Conservator Forests/Project Director FPDP
Shami Road, Peshawar.
Telephone: 76489

Balochistan.
Conservator Forests/Project Director FPDP
Dear Murad Jamali, Dist. Naseerabad.
Telephone: 401 or 426

Sindh.
Conservator Forests (Extension)/PD FPDP
Shahbaz Building, Hyderabad.
Telephone: 20922

Azad Kashmir.
Chief Conservator of Forests
Azad Government of Jammu and Kashmir
Muzaffarabad.
Telephone: 3806

Produced by Winrock International-58 Margalla Road, F-7/2, Islamabad, Telephone 813262
Author-Gary G. Naughton. Computer Layout-Haroon Abbasi
April 1992 - 1,000

TREE FARMERS GUIDE

SHISHAM VENEER LOG GRADES

19

The market value of the logs which may be cut from farm trees depends upon: the **species**; the **size**; the **quality (grade)**; and the **conditions of the market** (distance to the factory, market demand, and the time of year).

Grades are standards of quality which can be used to separate logs into groups by **market value** and **use**. The objective is to capture the highest possible **market price.**

Shisham veneer logs are the highest value tree crop that can be produced on farms. Because it may take 50 years or more to grow a veneer grade shisham log, farmers should consider planting shisham trees for their grandchildren, and each generation can look forward to selling the trees planted by their grandparents.

Growing the tree to the proper **size** is not the only need; careful pruning of the tree **every year** from the time it is 10 feet tall will be needed to produce veneer logs. **Knots and limbs** are the most serious defect when grading shisham logs. Even when the log is big enough, or straight enough, **knots** may cause degrade of the log.

Buyers will usually grade the logs **before the tree is cut** so that all sides ("faces") of the log can be easily examined for defects. Then, after felling, the ends of the logs can be examined to see if there is any hidden defect to be considered. Contractors will usually price your veneer logs individually when dealing.

When grading veneer logs you should visually divide the log into 4 longitudinal faces to see if the defects can be limited to only **one face**. The difference between a veneer log with 4 clear faces and one with 3 clear faces, is in **doubling** the market value of the clear log on a cubic foot basis.

All **shisham veneer logs** must be straight, nearly cylindrical, sound, with rich brown heartwood, thin sapwood, and freshly cut with a saw.

FIRST CLASS SHISHAM VENEER

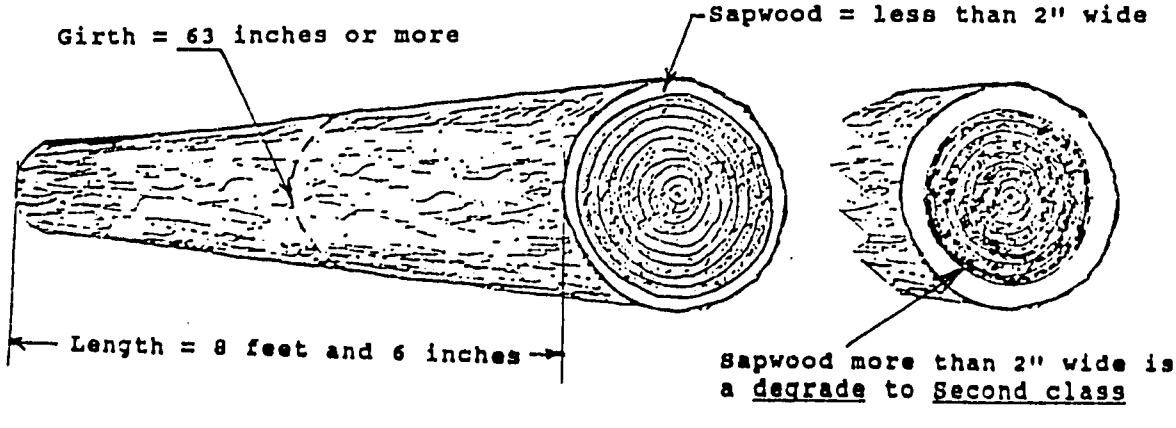

First Class Veneer Logs

(minimum standards)

LENGTH: 8 feet and 6 inches
GIRTH: 63 inches (mid girth, over bark)
SAPWOOD: average less than 2 inches wide
KNOTS: 100% clear of knots on 3 faces; the fourth face must be 85% clear, accepting only white knots less than 1 inch diameter.
ADDITIONAL cause for degrade from this class might be taper, deep wounds, and insect-holes, if considered excessive.

If a log fails to meet the above length or knot limits, it will be degraded to Sawlog Class; failure to meet any other limit will allow it to be considered for Second Class Veneer.

Second Class Veneer Logs

Same as for First Class Veneer, except:

GIRTH: 53" (+)
SAPWOOD: may be more than 2" wide if girth is over 63"

This leaflet is sponsored by the *Forestry Planning and Development Project*, a joint project of the Government of Pakistan & the United States Agency for International Development.

For additional professional assistance in managing your tree crop, contact the Project Officer nearest to your area:

jab.
Conservator Forests/Project Director FPDP
Swan Camp, Islamabad.
Telephone: 8471403

NWFP.
Conservator Forests/Project Director FPDP
Shami Road, Peshawar.
Telephone: 76489

Balochistan.
Conservator Forests/Project Director FPDP
Dear Murad Jamali, Dist. Naseerabad.
Telephone: 401 or 426

Sindh.
Conservator Forests (Extension)/PD FPDP
Shahbaz Building, Hyderabad.
Telephone: 20922

Azad Kashmir.
Chief Conservator of Forests
Azad Government of Jammu and Kashmir
Muzaffarabad.
Telephone: 3806

Produced by Winrock International-58 Margalla Road, F-7/2, Islamabad, Telephone 813262
Author-Gary G. Naughton. Computer Layout-Haroon Abbasi
April 1992 - 1,000

25

TREE FARMERS GUIDE

SEMAL LOG GRADES

20

SEMAL PEELER LOGS are used by the **plywood industries** for the manufacture of plywood. A "**peeler**" log is one which is used to make one long, continuous sheet of **rotary cut** veneer on a large lathe. In most cases, **semal** is used for the interior 'sandwich' plys in plywood; but some factories also use clear sheets from First Class logs for the outside sheets on plywood.

TREE FARMERS who are growing **semal** need to know about its uses and market grade standards so they can:

- produce the highest quality logs by proper pruning;
- know the proper size for harvesting the trees;
- understand the market when they make a deal to sell their trees or logs.

SEMAL has a big advantage over other trees used for making plywood because of its **light weight** and **soft texture**. Farmers should concentrate their management efforts on the **main trunk** of the tree, because over 90% of the value of the tree will come from the first 20 feet of the trunk. Proper pruning of the lower branches is explained in TREE FARMER'S GUIDE No.2.

To grade as **First Class**, logs must be straight, cylindrical, free of defect (knots, rot, etc.) and freshly cut with a saw. If semal logs are cut during hot weather they will be quickly infected by the blue stain fungus which will discolor the wood and cause the log to be automatically **degraded** to the next lower class.

FIRST CLASS SEMAL PEELER LOG

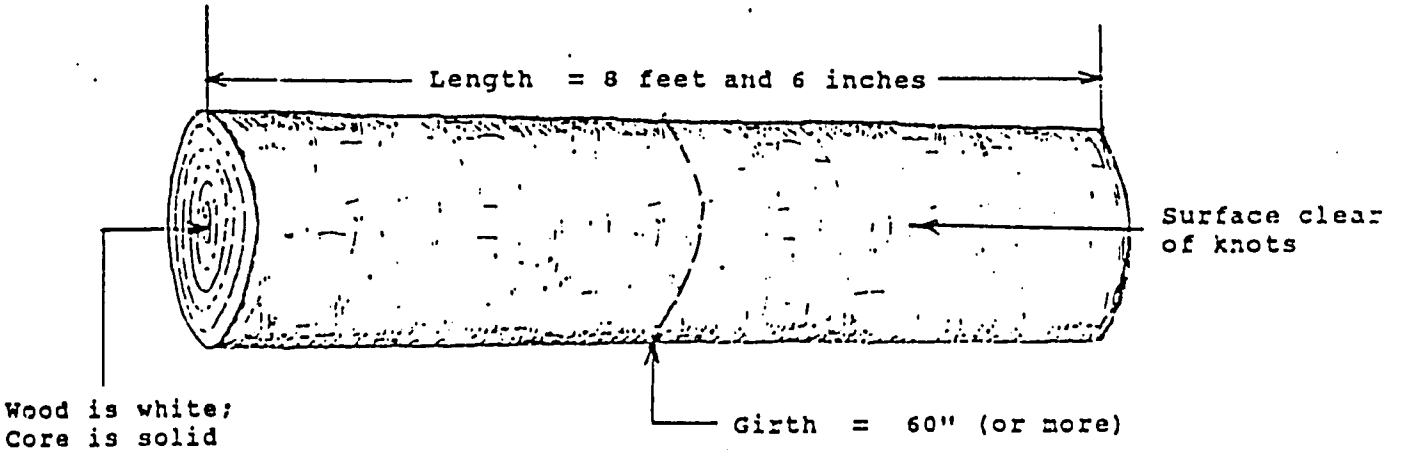

FIRST CLASS
SEMAL PEELER LOGS
(Minimum Requirements)

LENGTH:	8'-6" (also accept 7'-6" at some mills)
GIRTH:	60" (+), at midpoint, overbark
KNOTS:	must be smoothly overgrown; no surface knots accepted
COLOR:	white; blue stain will degrade to lower class
CORE:	solid; no rot, splits or cracks

SECOND CLASS
SEMAL PEELER LOGS

LENGTH:	same as under First Class
GIRTH:	49" to 59"
KNOTS:	same as under First Class
COLOR:	will accept some logs degraded from First Class because of blue stain.
CORE:	same as under First Class

THIRD CLASS
SEMAL PEELER LOGS

LENGTH:	9'-0" or 4'-6"
GIRTH:	36" to 48"
KNOTS:	sound (white) knots less than 2" diameter accepted
COLOR:	will accept blue stain in logs degraded from First and Second Class
CORE:	same as under First Class.

Old semal trees may develop 'star butt' or buttress roots as shown here. They are usually cut off when the tree is felled so the end of the log is rounded, and are not a cause of degrade under normal conditions.

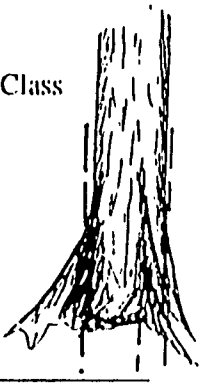

For additional information about log grades refer to Forestry Planning and Development Project Technical Note No. 14. This leaflet is sponsored by the *Forestry Planning and Development Project*, a joint project of the Government of Pakistan & the United States Agency for International Development.

For additional professional assistance in managing your tree crop, contact the Project Officer nearest to your area:

ıjab.

Conservator Forests/Project Director FPDP
Swan Camp, Islamabad.
Telephone: 8471403

NWFP.

Conservator Forests/Project Director FPDP
Shami Road, Peshawar.
Telephone:

Balochistan.

Conservator Forests/Project Director FPDP
Dear Murad Jamali, Dist. Naseerabad.
Telephone: 401

Sindh.

Conservator Forests (Extension)/PD FPDP
Shahbaz Building, Hyderabad.
Telephone:

Azad Kashmir.

Chief Conservator of Forests
Azad Government of Jammu and Kashmir
Muzaffarabad. Telephone.

Produced by Winrock International-58 Margalla Road, F-7/2, Islamabad, Telephone 813262
Author-Gary G. Nag[illegible] Computer Layout-Haroon Abbasi
April 1994 - 1,000

APPENDIX B
WORKSHOP ON EXTENSION FORESTRY ORGANIZATION
SUGGESTED AGENDA

I. Develop a Mission Statement for Extension Forestry; such as:

"To Promote Practical Farm Forestry", or

"To Increase Private Sector Forest Production", or

"To Strengthen Development Through Forestry", etc.

II. Determine whether the Extension Foresters will be administered within the existing cadre or as a separate cadre.

- If the **same cadre**, then consider:
  - How selection and postings will be done
  - How re-posting and promotion will be done
- If a **separate cadre**, then consider:
  - How selection and postings will be done
  - How re-posting and promotion will be done
  - Whether there is adequate opportunity for career advancement

III. Develop a set of Goals for the Extension Forestry Cell: such as:

"Inform, Motivate, and Train farmers in the growing of trees as a crop"; or

"Achieve self-sufficiency in production of wood for Pakistan by teaching, advising and assisting farmers"; or

"Develop and maintain an active communication and working liaison (linkage) between farmers, industrialists, and foresters to improve the economic productivity of the private forestry sector"; or etc.

IV. Decide **who** will be the **direct delivery agents** for the Extension Forestry Program, such as:

- Minimum required education and skill level needed to deal directly with farmers, answer their technical questions, show them how to plant and manage their trees,

and to **solve problems on the spot** or know where to find necessary **research assistance;**

- Because **first rate** communication skills and good formal education are generally considered necessary to be an effective **extension forester**, it is recommended that these **minimum requirements** include formal education in forestry at the BSc level. The technical training currently being provided by the forestry schools for foresters and forest guards is not adequate for this purpose.

V. Decide **where** and **how many** Extension Foresters will be assigned.

- The proper placement of these staff will probably vary between a maximum of 1 person per **Tehsil**, and a minimum of 1 person per **District.** In the case of those Districts which were under the FPD Project, farm forestry has reached a state of maturity where the activity could be sustained by **1 Extension Forester (DFO/SDFO) per District.**

- Most efficient structure would probably be to office the Extension Foresters with the existing territorial staff in the districts.

VI. Decide **how** to minimize the Extension **budget** (This discussion should involve the Planning Dept.):

- **Personnel:**

  -Does 1 Extension Forester need more than 1 clerk?
  -Is a driver really necessary?

  - If the Extension Foresters do the right job of developing **some** of the farmers into local leaders who will show their neighbors how to practice tree farming, doesn't this help reduce the number of forest department staff required?

- **Operations:**

  - What essentials must be provided in addition to a **desk, telephone, clerk, and car**?

  - If you minimize staff and maximize budget for **TA/DA, POL, printing, and telephone,** can the job be done to meet the goals and objectives?

VII. Decide **what** should be done under the Extension Forestry Program:

- Remember that the purpose of extension is to **share knowledge;** its success cannot be measured by **how many trees are produced or planted, or how many acres are afforested.** These are farmer's targets in this case, since the farmers will do the work.

- Set up a series of **annual objectives** which relate to the **extension mission** of 'inform, motivate, teach, and change people so that they may be more self sufficient'.

- Write a **new job description** for the position of "Extension Forester", keeping in mind that he will be a **teacher and advisor,** and not an 'officer'.

VIII. Determine additional training needs for the Extension Foresters:

-**Where** will it be done;

-**What** subjects will be taught;

-Plans for **refresher training and followup**

IX. Decide **how** Extension Forestry should be linked to the **Research Institutions** to provide **ongoing technical support** :

- Linkage to PFI;

- Linkage to Provincial Forest Research Stations;

  - **who will do it,** and
  - **how will it operate?**

X. What departmental actions must be taken to **implement** the new extension forestry program? Consider:

- Will there need to be sanction for **new positions?**

- Are existing **service rules** adequate?

- Do new **job descriptions** need higher approval? (A sample Job Description is attached)

- Is the **existing budget** adequate, or how can new funds be justified to activate the program?

We expect that the above workshop will require the greater part of three working days for the **first effort,** and that additional sessions will likely be needed at later intervals.

APPENDIX C - SHORTCOURSES

Course Title: **"SOLAR DRYING OF LUMBER"**

Topics Covered: Design and operation of solar kilns; calculation of load capacity and drying time; proper stacking of lumber; measuring moisture content of wood.

Eligibility: Basic knowledge of wood characteristics and differences; interest in improved drying of lumber.

Number of Seats: 10

Duration: 3 days

OUTLINE

1. Introduction to the techniques of wood drying
   - A. General difference between wood species
     - Basic wood technology
     - Hardwoods vs. conifers
     - Diffused porous vs. ring porous
   - B. Controlling the rate of drying (temperature and humidity)
   - C. Controlling defect caused by drying (stacking, etc)
   - D. Case-hardening and its prevention
   - E. The effect of partial air-drying before kiln drying
2. Measuring the moisture content of wood
   - A. Oven-dry basis calculations
   - B. Wet basis calculations
   - C. Use of moisture meter
   - D. Cutting, weighing and drying samples
   - E. Determining the equilibrium moisture content
3. Designing a solar kiln
   - A. Size
     - Ratio of collector surface to wood volume
     - Required free space for air movement
     - Dimension limits due to solar angle
   - B. Calculation of solar angle
   - C. Calculation of fan size
   - D. Location of the kiln
     - Unobstructed sun angle
     - South exposure
   - E. Choice of materials for construction
     - Insulation requirements
     - Comparative cost of materials
     - Availability and substitutions
4. Solar kiln operations
   - A. Seasonal and climatic variations
   - B. Temperature control
   - C. Humidity control
   - D. Diurnal fluctuations
   - E. Management of time, space, and labor

References:

Anonymous.1980. "Solar Heated Lumber Dryer for the Small Business", MT#20C, Utilization and Marketing, Virginia Cooperative Extension Service, Blacksburg, Va., 17 pp.

Bois, Paul J.1977. "Constructing and Operating a Small Solar Heated Lumber Dryer", Forest Products Utilization Tech Rpt #7, USDA Forest Service, Madison, Wisconsin.

Naughton, Gary G. 1992. "Air-Seasoning Lumber", Tech Note #9, Forestry Planning and Development Project, (Winrock International), Islamabad, Pakistan.

Course Title: **"DESIGN AND MANAGEMENT OF FARM WINDBREAKS"**

Topics Covered: The windbreak as an agro-forestry model; function of windbreaks; influence on crop yields; design principles; and management concepts.

Eligibility: Extension/Social Foresters; Soil Conservationists

Number of Seats: 15

Duration: 3 Days

OUTLINE

1. Windbreaks as an agro-forestry model
   A. Emphasis on improved **crop** production and **soil** management
   B. Comparison to 'alley cropping' systems
      - Wider field areas between tree belts
      - Production of crops with less shade tolerance
      - Low level of management complexity/intensity
      - Higher **crop income**, lower **tree income**
2. How windbreaks function
   A. Vertical 'lift' of wind
   B. Horizontal 'baffle' of wind
   C. Filtration of air-borne dust (and/or snow)
   D. The concept of H -- the height function and its affect on wind velocity, temperature and humidity
   E. The variable effects of windbreak density
3. Windbreak influences on crop yields
   A. The typical grain production profile on a field
      - Root system effects and species variability
      - Water/nutrient competition
      - Shade effects
   B. The special case for orchard and vegetable protection
      - Reduction of wind damage during flower set
      - Reduction of wind damage to ripening fruit
      - Improved control of pesticide drift
   C. Reduction of waterlogging effects on irrigated fields
4. Principles of windbreak design
   A. Orientation **perpendicular** to prevailing winds
   B. Uniformity of height, density, and spacing
   C. Vertical density
      - adverse affects from pruning
      - the advantage of some amount of **porosity**
   D. Number of rows
      - the affects of horizontal density
      - the opportunity for use of additional species
   E. The affect of **windbreak length** on performance
      - calculation of the 'protected zone'
      - protection against 'quartering' or shifting winds
   F. Calculating the desired **interval** between windbreaks

G. Spacing of trees
- within the row
- between rows in multi-row windbreaks

H. Species selection
- consideration of size, shape and conformation
- soil and site limitations

5. Windbreak Management

A. Adverse affects of pruning

B. Protection
- from grazing/browsing by livestock
- from firewood cutters/gatherers
- from fire, insect, and disease
- from herbicide sprays

C. Harvest scheduling
- to reduce long-term crop affects
- to augment periodic income
- to increase **density** through coppice management
- alternate **row** harvesting

Reference:

NAUGHTON, Gary G. 1990. "Farm Windbreaks", Technical Note #2 Forestry Planning and Development Project (Winrock International), Islamabad, Pakistan, 5pp.

Course Title: **"AGROFORESTRY SYSTEMS CASH FLOW ANALYSIS"**

Topics Covered: Comparing the annual income from crops and the periodic income from trees; discounted cash flow analysis; use of the 'CASH' computer model.

Eligibility: Graduates with MSc in Forestry

Number of Seats: (limited by computer availability)

Duration: 5 Days

OUTLINE

1. The concept of **discounted value:**
   A. Time and the cost of money:
   B. One rupee today is worth more than one rupee tomorrow
   C. One rupee tomorrow is worth more than a **promise** to pay
2. The concept of **opportunity cost:**
3. The concept of **equivalent annual income:**
4. Selecting an **interest rate:**
   A. The concept of the **natural rate**
   B. The effect of **inflation**
   C. The effect of **investment risk**
   D. The **bank rate** for borrowed money (long and short-term)
   E. The **alternative rate** available to the farmer
5. The **arithmetic of discounting:**
   A. The capitalization formula
   B. The concept of **capital value, investment value, net worth**
   C. The straight **discount** formula
   D. The **sunk cost** formula
   E. The **annualized income (EAI)** formula
6. Collecting and standardizing information for analysis
   A. Understanding the difference between costs and returns from crops and trees
      - **Stumpage value** for wood products
      - **Farm gate value** for crops
      - **Market cost** of inputs
      - **"Paying"** yourself for labor
   B. Use of **historic averages** for crop yields
   C. Use of **conservative prediction** for tree yields
7. Developing a table of **inputs and outputs** (costs and returns)
   A. Expected **timing** of events
   B. Tabulation of **quantity** instead of money
   C. Conversion of quantity to **money** after tabulation
8. Use of the **'CASH'** computer program
   A. Review User's Manual
   B. Run the "sample" program
   C. Input of tabulated data and **actual** program run
9. Analysis of **'CASH'** program results
   A. The significance of **EAI**
   B. The concept of the **benefit:cost ratio**
   C. The concept of **internal rate of return (IRR)**

10. Re-running the program to obtain values for:
    A. Trees only
    B. Crops only
    C. Combined **(agroforestry model)** trees and crops
11. Compare and discuss results

References:

BLINN, Charles R. and Dietmar W. Rose. 1987. "CASH: User's Manual", Staff Paper series No. 54, Dept of Forest Resources, Univ of Minnesota, Dec. 1987 (with software program for personal computer).

DAVIS, Lawrence S. and K. Norman Johnson. 1987. "Forest Management", third edition, McGraw-Hill Co., New York, Chapter 7.

MALIK, Nazir Ahmad and Gary G. Naughton. 1993. "Economic Opportunities From Tree Farming", Tech. Note # 12, Forestry Planning and Development Project, Islamabad, March 1993.