PD-ABK-619
ISN 93555

World Environment Center

Waste Minimization Impact Project
Electroplating Industry
Latvia

Visit #2 Report

October 4 and October 6, 1994

World Environment Center
419 Park Avenue South, 18th floor
New York, N.Y. 10016

March 1995

DISTRIBUTION

Mr. Michael Kalinoski, Senior Environmental Specialist, Bureau for Europe and the New Independent States, United States Agency for International Development, Washington, DC

Ms. Patricia Swahn, Acquisitions Manager, Acquisitions, United States Agency for International Development, Washington, DC

Mr. Baudouin de Marcken, Representative, Unites States Agency for International Development, Riga, Latvia

General Director, Riga Carriage Building Works, Riga, Latvia

General Director, State Joint-Stock Company, "Lokomotive", Daugavpils, Latvia

General Director, Firma "DauER", Daugavpils, Latvia

Mr. Antony Marcil, WEC
Mr. George Carter, WEC
Mr. Romuald Michalek, WEC
Mr. Thomas McGrath, WEC
Mr. Prabodh Shah, WEC

Ms. Nataly Ladutko, Coordinator, WEC, Riga, Latvia.

Stephen Couture, Consultant, Woodard & Curran, Wellesley, Massachusetts

(2) Files

DISCLAIMER

The opinions expressed herein are the professional opinions of the authors and do not represent the official position of the Government of the United States or the World Environment Center. This report is not for distribution without written approval by the United States Agency for International Development, Washington, DC or the World Environment Center.

TABLE OF CONTENTS

I. ITINERARY.....1

II. INTRODUCTION.....2

III. EXECUTIVE SUMMARY.....3

IV. PLANT REPORTS.....4

Riga Carriage Building Works(RVR), Riga

State Firm DauER(DauER), Daugavpils

State Joint Stock Company "LOKOMOTIVE"(Lokomotive), Daugavpils

VI. ATTACHMENT

A - Powder coating technology

B - Spent machining lubricant/coolant recovery technology

C - Soldering operation air pollution control technology

D - Classifier sludge level detector

E - Plating thickness tester

F - pH controllers

G - Diaphragm Pumps

I. ITINERARY

TUESDAY, OCTOBER 4, 1994

RIGA CARRIAGE BUILDING WORKS, RIGA

THURSDAY, OCTOBER 6, 1994

STATE FIRM DAUER, DAUGAVPILS

STATE JOINT STOCK COMPANY "LOKOMOTIVE", DAUGAVPILS

6

II. INTRODUCTION

Pursuant to the technical assistance program for Central and Eastern European countries funded by the US Agency for International Development, the World Environment Center conducted a Waste Minimization Impact Project visit to three electroplating facilities in Latvia. The visit took place on October 4 and October 6, 1994.

The WEC team consisted of Mr. Stephen D. Couture, P.E., DEE, Consultant, Woodard & Curran, Inc., and Nataly Ladutko, the WEC "in country" coordinator,

This report was prepared by Stephen D. Couture, Consultant, and Prabodh Shah, WEC project manager.

6

III. EXECUTIVE SUMMARY

This report describes the activities of Stephen D. Couture's, visit to Latvia in conjunction with the continuation of the Waste Minimization Impact Project(WMIP) in the electroplating industry.

The trip to Latvia by the WEC, electroplating consultant, included follow up visits to the three Waste Minimization Demonstration(WMDP) Plants and follow up visits to the three WMIP plants. Details of the visits to the WMDP plants are covered under a separate report published in November 1994. The attached report covers activities at the WMIP plants, Riga Carriage Building Works(RVR), State Firm DauER(DauER) and State Joint Stock Company "Lokomotive" (Lokomotive).

Primary waste minimization opportunity at each plant was in reducing rinse water consumption by use of various control devices and process changes. Certain other process changes reduced the levels of heavy metals in the waste water discharge.

Following the first visit, Waste Minimization Committees at the three plants had prepared process inventory/data for the galvanic process lines in which they intend to implement waste minimization technologies. During the second visit, the WEC expert reviewed the data and finalized a list of waste minimization equipment/instruments. Following the second visit, the WEC sent technical information and specifications on selected equipment to each plant for review.

After receiving concurrence from the plants, selected equipment were purchased and sent to the plants. Each plant is currently in the process of installing the WEC supplied equipment and implementing recommended process improvements. Depending upon the success of the installation and performance, future visits by a US industry expert may not be necessary. WEC is encouraging self-sufficiency of WMIP plants in spirit of promoting the Pollution Prevention Center for Latvia. The final Results Seminar for the WMDP and WMIP facilities is planned for September 1995.

Consultant's report detailing findings, recommendations and action items is attached as section IV.

1

IV. PLANT REPORTS

ELECTROPLATING/METAL FINISHING WASTE MINIMIZATION IMPACT PROJECT

AT

RIGA CARRIAGE BUILDING WORKS (RVR)
RIGA, LATVIA

WEC Technical Expert Trip Report Supplement
(October 4, 1994)

Prepared By:

Stephen D. Couture, P.E., DEE
Woodard & Curran, Inc.
60 Walnut Street
Wellesley, MA 02181

9

INTRODUCTION

This document is intended to serve as a supplement to the World Environment Center (WEC) Trip Report for the Waste Minimization Impact Project activities completed during October 1994. This Trip Report supplement summarizes the activities completed at the Riga Carriage Building Works (Riga, Latvia) on October 4, 1994 by Nataly Ladutko and Stephen Couture of the WEC Electroplating Industry Waste Minimization Impact Project Team.

The initial visit to the Riga Carriage Building Works by the WEC Project Team was made in July 1994 (7/11/94 and 7/18/94). Mr. James Miille (Chemical Solutions, Inc., Pleasanton, CA) served as the Project Team Technical Expert (in lieu of Stephen Couture) on the initial visit in July 1994. The findings and discussions from the initial visit to RVR and the preliminary recommendations for the RVR waste minimization impact project plan are summarized in **World Environment Center Trip Report 1 - Riga Carriage Building Works - Riga, Latvia - Waste Minimization Impact Project - July 11 and 18, 1994** (Distributed September 1994).

Subsequent to the first visit, the RVR Waste Minimization Committee prepared process inventory/data sheets for the galvanic process lines in which they intend to implement waste minimization equipment, instrumentation and operational modifications. The purpose of the October 4, 1994 visit to the RVR enterprise was to was to confirm the information provided by RVR in process inventory/data sheets and to finalize the RVR waste minimization plan. Following the second visit to the RVR enterprise, the equipment and instrumentation for the modifications to the galvanic process lines will be designed, specified and ordered.

10

DISCUSSION

The following is a summary of the observations and discussions from the second visit to the RVR enterprise:

1. The WEC Project Team was hosted and escorted by the following members of RVR's Waste Minimization Committee:

   Yevgyeny Boulichev (Chief Technological Engineer)

   Juris Kanepe (Deputy Technical Director serving as RVR's Waste Minimization Committee Chairman)

2. The galvanic process operations were inspected to confirm the process inventory/data sheets prepared by RVR. Based on the information in the process inventory/data sheets, the following modifications, equipment and instrumentation will be implemented in the galvanic operations listed below:

   a. Galvanizing of Work Pieces in Tanks

Process Rinse Tank Number/Name	Conductivity Controller	Distribution Sparger/Rotometer	Flow Totalizer
2/Warm Water Rinse	Yes	Yes	Yes
5/Cold Water Rinse	Yes	Yes	Yes
7/Cold Water Rinse	Yes	Yes	Yes
10/11 Two Stage Counterflow Rinse	Yes	Yes	Yes

b. Protective Decorative Chromium Work

Process Rinse Tank Number/Name	Conductivity Controller	Distribution Sparger/Rotometer	Flow Totalizer
4/5 Two Stage Counterflow Rinse	Yes	Yes	Yes

c. Galvanizing of Small Parts in Barrels

Process Rinse Tank Number/Name	Conductivity Controller	Distribution Sparger/Rotometer	Flow Totalizer
1/Hot Water Rinse	Yes	Yes	Yes
3/Cold Water Rinse	Yes	Yes	Yes
5/Cold Water Rinse	Yes	Yes	Yes
7/8 Two Stage Counterflow Rinse	Yes	Yes	Yes

3. The wastewater treatment plant was closed for the day but the Project Team was able to inspect the clarifier which is located out-of-doors, adjacent to the wastewater treatment plant.

The clarifier (referred to by RVR as the silt settler) is a standard circular type of concrete design. The overflow weir is fixed and also constructed of concrete.

The classifier is currently operating in a batch mode. Treated (lime pH adjusted) wastewater consisting of combined mixed metal rinsewaters and concentrated process bath dumps (following cyanide oxidation by alkaline chlorination and chromium reduction by acid and sodium metabisulfite) are pumped (once per day, in a batch mode) to the clarifier and are allowed to settle. Metal hydroxide sludge produced in the treatment process is manually pumped to containers for storage (using a portable centrifugal pump). Clear supernatant from the clarifier is pumped to the municipal sewer. Periodically, supernatant from the sludge storage containers is pumped to the sewer.

Formerly, treated water along with sludge was pumped to the sewer. This practice resulted in the discharge of heavy metals to the sewer in very high concentrations.

4. RVR requested the following additional technical assistance from WEC:

   a. Pumping equipment to evacuate sludge from the clarifier to the storage containers. RVR can run compressed air to the clarifier to power an air operated diaphragm pump. The existing methods of removing sludge from the clarifier is difficult to set up and operate. An air operated diaphragm pump would simplify the setup and operation and allow for easier control of the pumping rate to prevent excess water from being transferred to sludge storage from the clarifier.

   b. RVR was in the process of constructing a vacuum filter operation for sludge dewatering but halted construction because of the lack of financial resources.

      They would like to implement a sludge dewatering filter press and requested WEC's assistance with obtaining the equipment or funds.

   c. Instrumentation to monitor the sludge level in the clarifier. This instrumentation would allow RVR to properly schedule removal of sludge from the clarifier to the municipal sewer with the clarifier effluent.

   d. Technical information/assistance regarding air pollution control technologies from ventilation from electrical wiring soldering operations.

CONCLUSIONS AND RECOMMENDATIONS

WEC suggests the following recommendations for the RVR facility:

1. Implement the galvanic process rinsewater tank modifications as detailed in this trip report supplement.

2. Implement sludge level detection monitoring instrumentation for the clarifier.

3. Implement sludge pumping (for removal from the clarifier) using an air operated diaphragm pump.

4. Although a sludge dewatering filter press would be beneficial to the RVR enterprise for reducing the volume of dewatered sludge from the wastewater treatment operation, the cost of the equipment is beyond the scope of the WEC project funding. Alternative funding sources will be investigated by the WEC Project Team through the United States Agency for International Development (USAID).

14

ELECTROPLATING/METAL FINISHING WASTE MINIMIZATION IMPACT PROJECT

AT

STATE FIRM DauER

DAUGAVPILS, LATVIA

WEC Technical Expert Trip Report Supplement
(October 6, 1994)

Prepared By:

Stephen D. Couture, P.E., DEE
Woodard & Curran, Inc.
60 Walnut Street
Wellesley, MA 02181

INTRODUCTION

This document is intended to serve as a supplement to the World Environment Center (WEC) Trip Report for the Waste Minimization Impact Project activities completed during October 1994. This Trip Report supplement summarizes the activities completed at the State Firm DauER (Daugavpils, Latvia) on October 6, 1994 by Nataly Ladutko and Stephen Couture of the WEC Electroplating Industry Waste Minimization Impact Project Team.

The initial visit to the State Firm DauER enterprise by the WEC Project Team was made in July 1994 (7/12/94 and 7/13/94). Mr. James Miille (Chemical Solutions, Inc., Pleasanton, CA) served as the Project Team Technical Expert (in lieu of Stephen Couture) on the initial visit in July 1994. The findings and discussions from the initial visit to State Firm DauER and the preliminary recommendations for the State Firm DauER waste minimization impact project plan are summarized in **World Environment Center Trip Report 1 - State Firm DauER - Riga, Latvia - Waste Minimization Impact Project - July 12 and 13, 1994** (Distributed September 1994).

Subsequent to the first visit, the DauER Waste Minimization Committee prepared process inventory/data sheets for the galvanic process lines in which they intend to implement waste minimization equipment, instrumentation and operational modifications. The purpose of the October 6, 1994 visit to the DauER enterprise was to was to confirm the information provided by DauER in process inventory/data sheets and to finalize the DauER waste minimization plan. Following the second visit to the DauER enterprise, the equipment and instrumentation for the modifications to the galvanic process lines will be designed, specified and ordered.

DISCUSSION

The following is a summary of the observations and discussions from the second visit to the DauER enterprise:

1. The WEC Project Team was hosted and escorted by the following members of DauER's Waste Minimization Committee:

   Stepan Solovyev (Environmental Protection Department Manager)

   Alexander Antonov (Electroplating Shop Manager)

2. The galvanic process operations were inspected to confirm the process inventory/data sheets prepared by DauER. Based on the information in the process inventory/data sheets and the observations/discussions during the October site visit, the following modifications, equipment and instrumentation will be implemented in the galvanic operations listed below:

   a. Zinc Plating (2 lines in parallel)

Process Rinse Tank Number/Name	Conductivity Controller	Distribution Sparger/Rotometer	Flow Totalizer
4/Hot Water Rinse	Yes	Yes	No
6/Cold Water Rinse	No	Yes	No
8/Cold Water Rinse	No	Yes	Yes

The rinse tanks will be configured so that the effluent from Tank 8 will be used to feed Tank 6 and the effluent from Tank 6 will be used to feed Tank 4. This will require implementation of two rinsewater pumping stations within each line.

17

3. DauER is experimenting with operating the galvanic process baths at the lower end of the concentration operating range. The Waste Minimization Committee was proactive in investigating the implementation of this process modification.

4. The facility treats galvanic process wastewater using chemical precipitation and gravity settling. A separate on-site treatment system is utilized for treating stormwater runoff. The stormwater treatment system discharges to the municipal rainwater collector. The oil norm for the stormwater discharge is 1.5 mg/l. The treated industrial wastewater is combined with sanitary wastewater from the facility before discharge to the municipal sewer.

   In the existing galvanic wastewater treatment system, rinsewaters containing chromium are separated from the other metal and non-metal bearing rinsewater streams. The chromium wastewaters are chemically treated using sulfuric acid and ferric sulfate. The combined metal/non-metal bearing wastestreams are chemically treated using lime. Concentrated bath dumps are batch treated and are bled to the rinsewater streams. Chemically treated wastestreams are combined (following chemical treatment) for liquid/solid separation in three parallel plate settlers (operating in parallel).

   The norms for metals concentrations in the discharge from the galvanic wastewater treatment system will be lowered in 1995. DauER is building a new wastewater treatment facility to meet the new norms. The new treatment system will include effluent filtration. Treated water will be recycled or discharged to the municipal sewer.

5. Spent coolants and lubricants are collected in special tanks and are transported to the "Lokomotive" enterprise for treatment. The cost to DauER for offsite treatment of these wastes is approximately 5 to 6 Lts. per cubic meter. DauER is considering onsite treatment of these wastes using aluminum sulfate and polymer.

6. The galvanic shop was noted to be extremely clean and well ventilated. The physical appearance of the shop is due to conscientious operation and maintenance.

7. DauER requested the following additional technical assistance from WEC:

   a. Information on the availability of a plating thickness tester that can be used on cylindrical parts. Technical specifications for the parts to be measured was provided by DauER.

   b. Information on the powder coating process that can be used in lieu of galvanic processes.

   c. Instrumentation to monitor the sludge level in the clarifier. This instrumentation would allow DauER to properly schedule removal of sludge from the clarifier, preventing sludge from washing out of the clarifier to the municipal sewer with the clarified effluent.

   d. Information on technologies for treating spent machining coolant and lubricant.

CONCLUSIONS AND RECOMMENDATIONS

WEC suggests the following recommendations for the DauER facility:

1. Implement the Zinc Plating Line process rinsewater tank modifications as detailed in this trip report supplement.

2. Implement sludge level detection monitoring instrumentation for the clarifiers

10

ELECTROPLATING/METAL FINISHING WASTE MINIMIZATION IMPACT PROJECT

AT

STATE JOINT - STOCK COMPANY "LOKOMOTIVE"
DAUGAVPILS, LATVIA

WEC Technical Expert Trip Report Supplement
(October 6, 1994)

Prepared By:

Stephen D. Couture, P.E., DEE
Woodard & Curran, Inc.
60 Walnut Street
Wellesley, MA 02181

21

INTRODUCTION

This document is intended to serve as a supplement to the World Environment Center (WEC) Trip Report for the Waste Minimization Impact Project activities completed during October 1994. This Trip Report supplement summarizes the activities completed at the State Joint - Stock Company "Lokomotive" (Daugavpils, Latvia) on October 6, 1994 by Nataly Ladutko and Stephen Couture of the WEC Electroplating Industry Waste Minimization Impact Project Team.

The initial visit to the "Lokomotive" enterprise by the WEC Project Team was made in July 1994 (7/13/94 and 7/14/94). Mr. James Miille (Chemical Solutions, Inc., Pleasanton, CA) served as the Project Team Technical Expert (in lieu of Stephen Couture) on the initial visit in July 1994. The findings and discussions from the initial visit to "Lokomotive" and the preliminary recommendations for the "Lokomotive" waste minimization impact project plan are summarized in **World Environment Center Trip Report 1 - State Joint Stock Company "Lokomotive" - Daugavpils, Latvia - Waste Minimization Impact Project - July 11 and 18, 1994** (Distributed September 1994).

Subsequent to the first visit, the "Lokomotive" Waste Minimization Committee prepared process inventory/data sheets for the galvanic process lines in which they intend to implement waste minimization equipment, instrumentation and operational modifications. The purpose of the October 6, 1994 visit to the Lokomotive" enterprise was to was to confirm the information provided by "Lokomotive" in the process inventory/data sheets and to finalize the "Lokomotive" enterprise waste minimization plan. Following the second visit to the "Lokomotive" enterprise, the equipment and instrumentation for the modifications to the galvanic process lines will be designed, specified and ordered.

22

DISCUSSION

The following is a summary of the observations and discussions from the second visit to the "Lokomotive" enterprise:

1. The WEC Project Team was hosted and escorted by the following members of the "Lokomotive" enterprise Waste Minimization Committee:

   Michael Potapenkov (Deputy Technical Director, serving as the "Lokomotive enterprise Waste Minimization Committee Chairman)

   Nicolai Shilobod (Deputy Superintendent of the Labor and Environment Preservation Department)

   Franz Nasir (Galvanic Shop Foreman)

2. The galvanic process operations were inspected to confirm the process inventory/data sheets prepared by the "Lokomotive" Waste Minimization Committee. Based on the information in the process inventory/data sheets and additional galvanic process line data collected during the October 1994 site visit, the following modifications, equipment and instrumentation will be implemented in the galvanic operations listed below:

   a. Galvanizing

Process Rinse Tank Number/Name	Conductivity Controller	Distribution Sparger/Rotometer	Flow Totalizer
3/Cold Water Rinse	Yes	Yes	Yes
6/Warm Water Rinse	Yes	Yes	Yes
7/Cold Water Rinse	Yes	Yes	Yes
15/Cold Water Rinse	Yes	Yes	Yes
17/Warm Water Rinse	Yes	Yes	Yes

b. Nickel - Copper - Nickel - Chrome Line

Process Rinse Tank Number/Name	Conductivity Controller	Distribution Sparger/Rotometer	Flow Totalizer
12/Rinse Following Nickel I	Yes	Yes	Yes
15/Rinse Following Copper	Yes	Yes	Yes
19/Hot Rinse Following Chrome	Yes	Yes	Yes

3. The "Lokomotive facility has three separate waste treatment facilities for:

* Galvanic process wastewater

  These wastewaters are treated in a system which utilizes ferrous iron (generated from scrap metal, sodium chloride, hydrochloric acid and electricity) and sodium hydroxide to precipitate heavy metals. Flocculent is added to assist in the agglomeration and settling of metal hydroxide precipitate. The chemically treated wastewaters are processed through two parallel inclined plate clarifiers for liquid/solid separation. Sludge dewatering is accomplished using a vacuum filter.

* Site stormwater runoff

  These wastewaters are treated in a dissolved air flotation system for grit and floating hydrocarbon (oil) removal.

* Wash water and production sumps

  These wastes contain predominantly oil and grit. They are treated via sedimentation and dissolved air floatation. Oil removed by the treatment process is sold for use by blacksmiths and boiler plants.

24

4. "Lokomotive" plans to reduce their treated wastewater discharge to the municipal sewer by reusing the treated galvanic wastewaters as makeup to their washwater system The washwater system is used for the initial washdown of locomotives and cars before they are disassembled for refurbishing.

5. The wastewater discharge norm for oil from the "Lokomotive" facility is 5 mg/l. "Lokomotive's" wastewater discharge averages 10 mg/l of oil.

6. "Lokomotive" requested the following additional technical assistance from WEC:

   a. Information on the powder coating process as a replacement for galvanic processes.

   b. pH controllers for their chemical wastewater treatment neutralization reaction (two controllers or one dual controller).

   c. Information on oil filtration systems for:

      * Spent lubricants and coolants (note, the "Lokomotive" facility treats spent coolants from the neighboring DauER facility).

      * Floor and equipment washdown.

V

CONCLUSIONS AND RECOMMENDATIONS

WEC suggests the following recommendations for the "Lokomotive" facility:

1. Implement the galvanic process rinsewater tank modifications as detailed in this trip report supplement.

2. Implement pH controllers in each of the two neutralization reactors of the galvanic wastewater treatment system.

26.

APPENDIX A

POWDER COATINGS

THE POWDER COATING INSTITUTE
2121 Eisenhower Avenue • Suite 401 • Alexandria, VA 22314 • (703) 684-1770

What Is Powder Coating?

Powder coating is an exciting new coating method that is making a major impact in the finishing industry. By utilizing the natural principle of opposites attract, a new finishing technology has been created which offers manufacturers increased economic benefits and superior quality.

Powder coating has been referred to as a "dry painting process." But to manufacturers, who have been using it for more than a decade in place of liquid paint, it is like the difference between a Model T and a Mercedes-Benz. That's because powder coating is a *modern* technology. For the first time, end-use manufacturers are able to engineer their finishing operations to a degree only dreamed of heretofore, while eliminating many of the problems that have been traditional in the finishing operation.

A full palette of colors await them to serve any market. An almost infinite range of properties are theirs to choose from, including resistance to ultra-violet rays, greater durability, better corrosion resistance plus any of a dozen other properties, depending on the particular needs of the user. Each can be accomplished by control of the powder formulation or finishing process.

How Powder Coating Works

The process is amazingly simple in concept and operation. Dry powder is pneumatically fed from a supply reservoir to a spray gun where a low amperage, high voltage charge is imparted to the powder particles. The powder used in the powder coating process is comprised of resins and pigments and in its dry, formulated state is then sprayed onto a part to be finished. The parts to be coated are electrically grounded so that the charged particles projected at them are firmly attracted to the part's surfaces and held there until melted and fused into a smooth coating in the baking ovens.

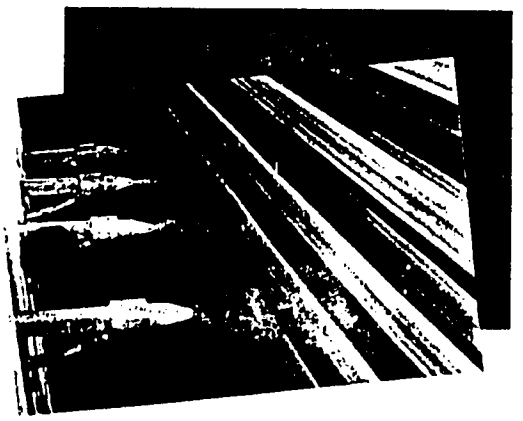

The coating process can be done manually or it can be a highly sophisticated automatic operation, where computer programmed robots can perform the spraying in booths up to and over a hundred feet long. The wide variety of equipment available makes powder coating feasible for the small end-use

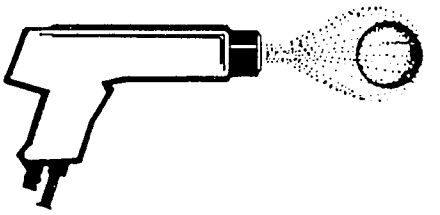

manufacturer, as well as for the very large user who may require an extensive finishing operation for multiple products.

Because the powder is dry when sprayed, any overspray can be readily retrieved and recycled regardless of whether the finishing system is manual or highly automated. Several methods are available depending on the application equipment in use and the size of the finishing operation. All however operate on the same principle: the unused powder is separated from the air stream by various vacuum and filtering methods and returned to a feed hopper for reuse enabling efficiency-use rates to approach almost 100%.

Powders for Every Use

The choice of powders is dependent on the end-use application and product manufacturers are able to specify not only colors but the most important properties wanted in a finish. The powders are then individually formulated to meet the industrial user's very specific finishing needs.

Powder coatings fall into two broad categories—thermoplastic and thermosetting. The choice of which to use will depend largely on the application. Generally, thermoplastic powders are more suitable for items requiring a thicker coating, where extreme performance requirements must be met. Thermosetting powder coatings are more often used in decorative and protective applications or when comparatively thinner coatings are desirable.

The principal resins used in the thermosetting type powder coatings are epoxy, polyester, and acrylic. Each has different advantages. Recently, powder coating manufacturers have crossed some of these to gain the best properties from each. Thermoplastic type coatings mainly use vinyl, nylon, and fluoropolymer resins.

Because powder coating suppliers have developed and tailor-formulated hundreds of different types of powders to fit almost every application requirement, the user should discuss his needs thoroughly with his supplier in order to obtain the maximum benefit available.

The Powder Coated Finish

The powder coated finish is fast replacing liquid finishes for a variety of reasons, not the least being the superior quality of powder coating finishes.

Gone are the sags, runs, drips and bubbles—instead a smooth or textured finish, uniform and durable is achieved that can be extremely thin or remarkably thick to meet the most demanding needs.

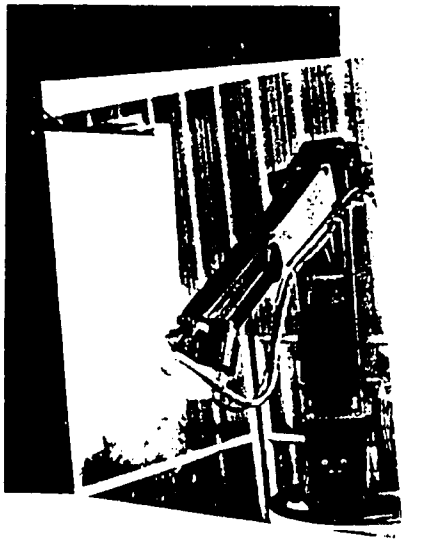

Today powder coating is used on metals, glass, and plastic, and a sprinkling of the end-use applications is listed on the back. For some applications, film thicknesses of less than 1 mil have been achieved and the high quality obtained has been responsible for powder coating's expansion into many decorative areas as well as for industrial uses where both thin and durable protection is needed.

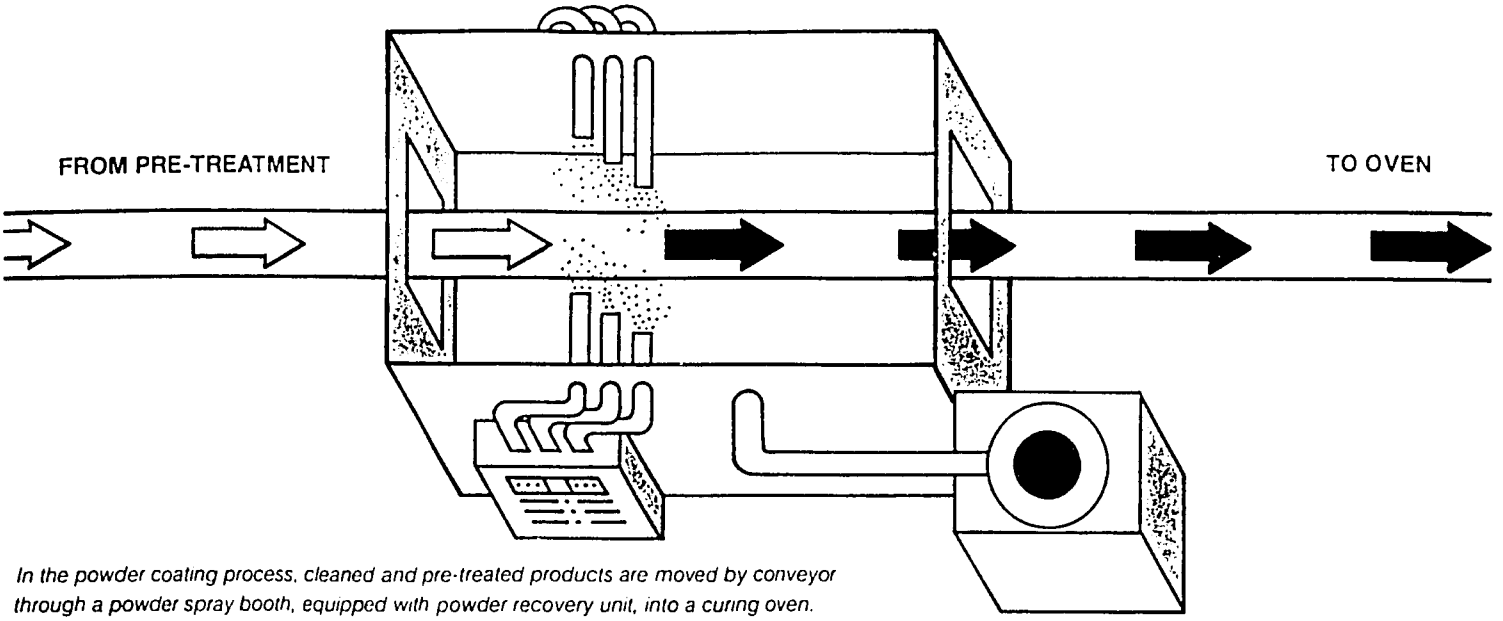

In the powder coating process, cleaned and pre-treated products are moved by conveyor through a powder spray booth, equipped with powder recovery unit, into a curing oven.

High, medium, and low gloss finishes are now commonplace and major industrial and consumer product manufacturers are using powder coating finishes as a sales and product advantage when compared to liquid finished products. The exceptional toughness and impact resistance of powder coating finishes (due to the use of higher molecular weight resin systems) have been key benefits for lighting fixture, metal furniture, and other applications where paint chipping has heretofore been a major problem.

THE END TO ENVIRONMENTAL PROBLEMS

The bane of many finishing departments using liquid paint systems has been the increasingly high cost of meeting air and water environmental regulations, as well as the disposal of hazardous and flammable waste.

In addition, the accent on a more wholesome workplace by labor, government, and management in recent years, has made it increasingly necessary to deal with environmental considerations in a manner that not only reflects today's standards but provides for the demands of tomorrow.

Enter powder coating!

Perhaps the greatest non-product advantage for the finisher is that the powder coating process frees him in one stroke from the environmental problems inherent in most liquid finishing systems. Powder contains no solvents and thereby emits negligible, if any, polluting volatile organic compounds into the atmosphere. Since oversprayed powder is recycled, hardly any solid waste is generated. Compliance with the nation's environmental laws and regulations is assured—without additional, ever-increasing costs.

THE ECONOMIC ADVANTAGES OF POWDER COATING

While material and equipment costs are similar to liquid finishing systems, savings can be achieved in energy, labor, production, waste disposal, and meeting EPA standards, making the real, bottom line costs of powder coating systems less than liquid finishing systems.

☐ ***Energy***-Because venting of fumes from wet spray paint s. .vent systems is not necessary, the need for air make-up—and the high costs for heating the air in colder climates—is lessened, resulting in considerable energy savings.

☐ ***Labor***-Labor costs are often substantially lower in plants using powder coating because automatic systems require less manpower and worker environment is more favorable—plus faster clean-up time and fewer clothing problems.

☐ ***Efficiency***-Because no drying or flash off time is required and the powder coating application process permits parts to be racked closer together on a conveyer, more parts can speed through the production line resulting in greater operating efficiency and lower unit costs. Despite the increased line speed, the reject rate is normally significantly lower when using a powder coating system than when a wet solvent system is utilized.

☐ ***Waste Disposal***-With a dry powder coating system, there is no liquid paint sludge to haul away to a burial site. That means more dollar savings and a major reduction of an increasingly difficult disposal problem.

☐ ***Pollution***-Air and water pollution problems are virtually eliminated with a powder coating system, which in turn, reduces the high costs of anti-pollution equipment and the time and money spent in dealing with federal and state regulatory agencies.

Powder Coating... Better From Start To Finish

Applications

Powder coatings are used on an increasing variety of products and components. Here is a representative listing:

Appliance

Refrigerator liners, shelves & cases
Dishwasher doors & racks
Freezer liners, racks & cabinets
Dryer drums
Clothes washer tops, lids
Microwave ovens
Range hoods & panels
Mixers & blenders
Sewing machines
Floor cleaners

Automotive

Light truck bodies
Wheels & bumpers
Oil & air filter housings
Coil springs & seat frames
Steering wheels & gears
Battery trays & brackets
Starter & wiper motors

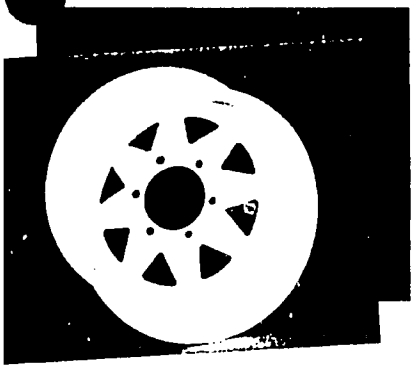

Wheel opening & fender moldings
Shock absorbers & hatchback lifters
Valve covers & fans
Voltage regulator housings
Brake disc pads
Trailer & tow assemblies
Mirror brackets & roof racks
Sport car louvres
Door handles & cranks
Glove compartment latches
Interior panels
Air conditioner & heater components

Electrical

Pad & pole transformers
Switch gears & bus bars
Electrical control housings & panels
Ignition boxes & timers
Electrical stators & coils
Flourescent lighting fixtures
Outdoor lighting fixtures
Recorders & control instruments
TV antennas
Electronic cabinets
Telephone coin boxes & apparatus

Metal & Office Furniture

Outdoor patio furniture
Wrought iron furniture
Metal tubular furniture
Office chair bases
Metal office partitions & components
Store, library & warehouse shelving
Hospital beds
Metal lockers & benches
Filing cabinets

Building & Architectural

Aluminum window & door frames
Exterior office & commercial building panels
Interior partitions, ceiling panels, shelving
Window & door screening
Ornamental facades & railings
Post, rails & fencing
Metal gutters & down spouts
Highway & parking lot poles
Prefab storage building panels & components
Highway guard rails & signs
Concrete reinforcement bars

Farm, Garden & Industrial Machinery

Garden tractors & mowers
Lawn spreaders & seeders
Farm implements

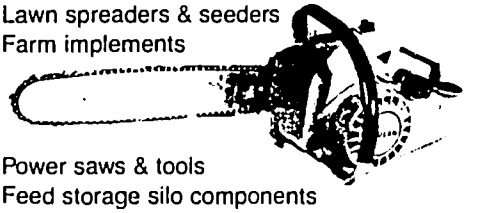

Power saws & tools
Feed storage silo components
Conveyor parts
Irrigation sprinklers & pipe systems
Pumps, blowers & exhaust fans
Textile & printing machinery
Office machines & computer cabinets
Air conditioners & water heaters
Commercial ice makers
Waste treatment equipment
Solar heating panels & equipment
Livestock gates & waterers
Garden & insecticide sprayers

Fabricated Metal & Miscellaneous Products

Plumbing & marine hardware
Hand & garden tools
Tools & first aid boxes
Oil & gas transmission pipe
Household & safe hardware
Bicycle frames & parts
Gym & playground equipment
Swimming pool accessories
Post boxes & letter sorters
Metal stampings & die cast parts
Metal cans & glass containers
Luggage frames & hinges
Tennis racket frames
Ski poles & equipment
Flexible gas connectors
Toys & recreational equipment

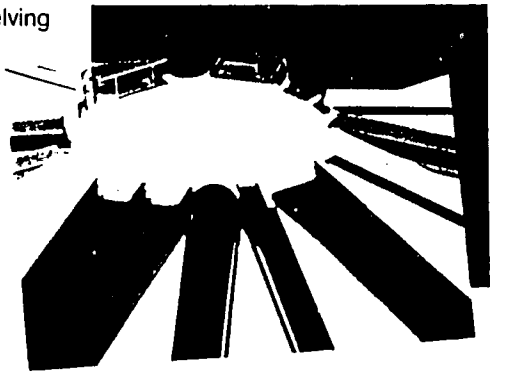

THE POWDER COATING INSTITUTE

ECONOMY • ECOLOGY • ENERGY • EXCELLENCE OF FINISH

The information contained in this brochure has been compiled from sources believed to be reliable and to represent the best opinion on the subject matter as of July 1, 1990. However, no warranty, guarantee or representation is made by the Powder Coating Institute, Inc. as to the correctness of sufficiency of any information contained herein, and the Powder Coating Institute, Inc. assumes no responsibility in connection therewith

TECHNICAL BRIEF

THE POWDER COATING INSTITUTE

2121 EISENHOWER AVENUE, SUITE 401, ALEXANDRIA, VIRGINIA 22314

POWDER COATINGS:
Technology of the Future, Here Today

1.0 INTRODUCTION

This report provides an overview on the current status of powder coating technology in 1993. The use of powder coating in North America is increasing at a remarkable rate of 12 percent per year in pounds of powder sold;[1] a consequence of recent improvements in the technology to manufacture and apply powder coatings, coupled with environmental considerations. There are currently about 3,000 powder coating operations in the United States and the number is increasing rapidly.[2]

From an environmental standpoint, the increased use of powder coatings as an alternative to liquid, solvent-based coatings results in significantly less emissions of volatile organic compounds (VOC's) and hazardous air pollutants (HAP's) as defined by Section 112 of the Clean Air Act Amendments of 1990. (Most of the HAP's released by the coatings industry are solvents that are volatile organic compounds although other air toxics may also be a constituent of some coatings.) Furthermore, powder processes can also reduce energy consumption and hazardous waste generation. Because powder coatings are applied as dry, finely divided particles, no VOC's are released during application and only minute quantities are released during the curing process. Further, in contrast to most liquid painting processes, powder overspray can be recovered and reused, rather than discarded as waste or hazardous waste. Use of powder coatings is seen by many air and other pollution control agencies as a means of reducing VOC's, HAP emissions, and hazardous waste from industrial finishing operations.

This report provides technical information on powder coatings as well as examples of the types of commercial products being powder coated. It is anticipated that this will assist state and local agencies evaluate the relationship between powder and air pollution control and hazardous waste reduction technology by answering questions concerning performance, applicability, costs, and availability.

The information presented in this report is based on data obtained from literature searches, contacts with several state and local air pollution control agencies, written survey questionnaires, and industry experts.

The remainder of this report is divided into six sections. The first section provides a brief history of powder coatings from the 1950's into the 1990's. The next describes the different classes of powder coatings that are currently available, including those very recently developed. The types of equipment required for a powder coating line are described in Section 4. The types of products that are typically powder coated are listed in Section 5. Section 6 discusses the economic advantages of using powder coatings and presents a cost comparison between powder and liquid coatings. Section 7 presents conclusions drawn from the study and Section 8 provides a list of references for the reader who wishes to explore the subject in greater detail.

The material provided in PCI Technical Briefs is for general informational purposes only.
Always consult an expert in powder coating before attempting actual applications.

2.0 BACKGROUND

The technology for finishing metal products with dry powder coatings rather than with conventional liquid paints has been available in this country since the mid-1950's. By the late '50's, powder was being used to coat pipe for corrosion protection and electric motor parts for insulation. These early powder coatings were applied using a fluidized bed process in which heated parts were dipped into a vat where the powder is fluidized by air. The particles of powder that contact the heated metal parts would adhere and soften and flow into a smooth even layer. Most coatings applied in these fluidized beds were vinyl or epoxy powders. Typical coating thicknesses ranged from 150 to 1,000 μm (6 to 40 mils) and the applied coatings were functional (e.g. for corrosion resistance) rather than decorative.[3]

During the evolution of powder coating technology, several disadvantages or potential problems were identified. Most have since been resolved or minimized. The following are some of the problematic issues of the past:

1. Any process that required frequent color changes would entail extensive downtime. The ability to apply a wide range of colors was restricted by equipment limitations and changeover times. Rapid color changes typically required multiple booths, with each booth dedicated to specific colors. Also, special equipment was required to isolate and recover different colors in order to gain the economic advantages of recycling the powder.
2. Storage and handling of powder was sensitive to temperature and humidity; powder would not fluidize well if exposed to excessive moisture.
3. Accurate feeding of powder to the spray gun was often difficult. The result was uneven flow and variations in film thickness.
4. Color matching and color uniformity was potentially more difficult to achieve than with liquid coatings.
5. Uniformity of coating thickness was sometimes difficult to maintain and thin films 25 to 51 μm (1 to 2 mils) were sometimes difficult to achieve.
6. Cure temperatures required for some powders were so high that their use would risk damage to solder joints or temperature-sensitive parts of items being coated.
7. Powder coatings were especially susceptible to "Faraday cage" effects which prevented charged particles from adhering to internal corners and recessed areas.
8. Airflow in the booth and the area prior to the oven had to be carefully controlled to avoid dislodging spray-applied powder that is held in place primarily through electrostatic attraction.
9. Because of the extra equipment requirements (multiple booths, powder handling, application and recovery systems), conversion of an existing liquid line to powder was often expensive.

Technological advances that have addressed and minimized or eliminated most of these issues are discussed in this report.

The primary development that opened the way for powder coatings to become a major factor in the metal finishing industry was the introduction of the electrostatic spray process in the early 1960's. Electrostatic spraying allowed 1) the application of relatively thin layers of powder coatings and 2) powder to be used on parts that could not be heated or dipped in a fluidized bed. Powder coatings, for the first time, became an economically viable alternative for decorative as well as functional coatings.

The emergence of powder coatings as an alternative to liquid decorative coatings led to the development of a variety of resin systems specifically designed to meet the needs of the diverse user industries. Epoxy resins were used almost exclusively during the early years of powder coatings. Polyesters, polyester/urethanes, epoxy-polyester hybrids, acrylics, and polyvinylidene fluoride have now become equally accepted resin systems, each having its own market share depending on the performance characteristics needed for the product. Powder coatings are currently available in clear and virtually any color, gloss level, or texture.

Recent advances in application technology also have allowed powder coatings to be used by an increasing number of industries. Automated finishing systems that allow rapid and frequent color changes and high powder utilization efficiencies resulting in minimal waste have made powder an economical coating in many high-volume industries. (Powder utilization is a term used to reflect the waste per unit of coating sprayed. It credits overspray that is captured and recycled when expressing efficiency as the percentage of total powder sprayed that is deposited on the work piece.)

3.0 POWDER COATING MATERIALS

As recently as the early 1970's, the powder coating industry had a limited number of solid resin systems on which to base powder formulations. Consequently, the ability of the powder coating industry to meet the diverse needs of the finishing industry was also limited. For several reasons, including increased concerns over VOC emissions, worker safety, and energy costs during the 1970's, the popularity of powder coatings grew until powder coatings represented almost 11 percent of all industrial coatings used in the finishing industry by 1992.[4] As interest in powder coatings has continued to grow, the industry has simultaneously responded with technological improvements. These include:

1. New, more efficient application and recovery equipment.
2. The ability to match virtually any color or texture with powder coatings. While there have been limitations in producing certain metallic effects with powder coatings, technology is continuing to perfect the metallic look.
3. Improved powder resin systems that provide a wide range of properties including performance, gloss, film thickness, and texture, that can coat not only metal, but also glass and ceramics.
4. The addition of infrared curing equipment to replace or supplement conventional gas, oil, and electric convection ovens.
5. The availability of powder in virtually any quantity, to suit the needs of every customer. (Minimum orders vary with the powder manufacturer.)

3.1 THERMOPLASTIC POWDERS

A thermoplastic powder coating is one that melts and flows when heat is applied, but continues to have the same chemical composition once it cools and solidifies. Thermoplastic powders are based on high molecular weight polymers that exhibit excellent chemical resistance, toughness, and flexibility. These resins tend to be difficult to grind to the consistent fine particles needed for spray application, and when heated, have a high viscosity. Consequently, they are applied mainly by the fluidized bed application technique, and used mostly in thick film applications.

Typical thermoplastic powder coatings include: polyethylene, polypropylene, nylon, polyvinyl chloride, thermoplastic polyamides, and thermoplastic polyesters.

Polyethylene powders were the first thermoplastic powder coatings to be offered. They provide excellent chemical resistance and outstanding electrical insulation properties. Polyethylene coatings are smooth, have a medium gloss, and good release properties that allow sticky materials to be cleaned from their surfaces, and are often used as coatings for laboratory equipment.

Polypropylene produces a surface that is very inert and is often used in applications where the powder coated part may be exposed to chemicals. Nylon offers excellent abrasion, wear and impact resistance; and a low coefficient of friction. They are commonly used as mechanical coatings for sliding and rotating bearing applications in appliances, farm equipment, and textile machinery. Polyvinyl chloride provides good durability as well as flexibility. An example of a product coated with polyvinyl chloride is dishwasher racks. Thermoplastic polyamides provide excellent resistance to detergents, impact, and high temperatures. Thermoplastic polyesters offer good exterior durability and weatherability, and do not usually require a primer for good adhesion to most metals. They are often used on outdoor metal furniture.

Thermoplastic powders are especially well suited for a thick coating capable of extreme performance requirements. Because of the inherent thickness of these coatings, they do not generally compete in the same market as liquid paints.

3.2 THERMOSETTING POWDERS

Thermosetting powder coatings are based on lower molecular weight solid resins. These powders also melt when exposed to heat. After they flow into a uniform thin layer, however, they chemically cross-link within themselves or with other reactive components to form a reaction product of much higher molecular weight. The final coating has a much different chemical structure than the basic resin. These newly formed materials are heat stable and, unlike the thermoplastic products after curing, will not soften back to the liquid phase when heated. Resins used in thermosetting powders can be ground into very fine particles necessary for spray application and thin, paint-like coatings. Because these systems produce a finish that offers properties comparable to liquid coatings, most of the technological advancements in recent years have been with thermosetting powders.

Thermosetting powders are derived from three generic types of resins: epoxy, polyester, and acrylic. From these three basic resin types, five coating systems are derived. Epoxy resin-based systems are the most common and are available in a wide range of formulations. They are used for both functional and decorative coatings. Their functional properties include outstanding corrosion resistance and electrical insulation. Decorative epoxies offer attractive finishes that are flexible, tough, have excellent corrosion resistance, and high impact strength. Epoxies lack ultraviolet resistance and therefore, are not recommended for outdoor use because in prolonged sunlight exposure, they tend to chalk and discolor. Various types of hardeners are used with epoxy powder to optimize appearance and properties for use in a wide range of applications. Recent developments allow epoxies to be cured at temperatures as low as 121°C (250°F) for 20 to 30 minutes, or even shorter times at higher temperatures.[5]

Epoxy-polyester hybrid coatings are used mainly for decorative applications. They are more resistant to chalking and over-bake yellowing than pure epoxies but have a lower surface hardness and are less resistant to solvents. Hybrids also exhibit better transfer efficiency and a greater degree of penetration into recessed areas of a part.

Polyester-TGIC coatings contain a polyester resin cross-linked with triglycidyl isocyanurate (TGIC) as a curing agent. These powders offer very good mechanical properties, impact strength, and weather resistance. They are resistant to chalking and are often used for such outdoor applications as patio furniture, lawn mowers, and aluminum extrusions and panels for large commercial buildings.

Acrylic-urethane coatings are formulated with acrylic resins cross-linked with blocked isocyanates. They have excellent color, gloss, hardness, weatherability, and chemical resistance. They have an excellent thin film appearance but are less flexible than polyesters.

Polyester-urethane coatings are formulated with polyester hydroxyl resin combined with blocked isocyanate hardeners. Polyurethane powders exhibit outstanding thin film appearance and toughness as well as good weathering properties.

Table 1 provides a summary of the key physical properties of these thermosetting powder coatings.

3.3 NEWLY DEVELOPED POWDERS

Advancements in powder coating formulations are occurring at a rapid pace. Powders are being developed to compete with almost every market that has traditionally been held by liquid coatings. Factory-applied architectural coatings (based on fluoropolymers), heat resistant coatings, metallic and textured coatings, low-temperature-cure powders, transparent and clear powders, and powders that can be used to color plastic parts by introducing the powder into the mold used for compression-molded plastic are in production use at this time. Most of these developments have occurred during the last several years and most powder coating manufacturers believe that the potential of powder coatings is only beginning to be realized.

In addition to the coating types discussed above, new developments are occurring in the area of enamel powders. Conventional porcelain enamel, the glassy coating traditionally found on metal surfaces such as bathtubs and washing machines, is a vitreous inorganic coating bonded to metal by fusion. The powder coating process for porcelain enamel involves the re-fusing of powdered glass on the metal surface at a cure temperature of 1200°F. The powdered glass is formed by melting oxide components and then quenching to form enamel frits. The frits can be converted to wet sprayable suspensions or to dry enamel powders through ball-milling. The resultant enamel coating is heat stable to over 450°C (842°F), color fast, and scratch resistant.[7] Enamel powders, a potential replacement for porcelain, are now available in a range of colors. Continued development will make these coatings even more competitive.

Polyvinylidene fluoride coatings have recently become available in powder form.[8] These fluoropolymer powder coatings have been available in Europe for about 4 years and are now sold in the United States. Their cure temperature is in the range of 475°-525°F. Because of their high resistance to weathering, industrial pollution, and corrosion, they are factory-applied for use on exterior aluminum extrusions and panels for architectural purposes.

4.0 POWDER COATING EQUIPMENT

The process of applying powder coatings to the surface of a product is, in general terms, similar to the traditional painting line used to apply liquid coatings. For powder coating (or traditional painting), parts to be coated first are exposed to a pretreatment operation to ensure that the

TABLE I. TYPICAL PROPERTIES OF THERMOSETTING POWDER COATINGS[6]

PROPERTIES	Epoxy	Epoxy/polyester hybrid	TGIC polyester	Polyester urethane	Acrylic urethane
Application Thickness	0.5-20 mils[a]	0.5-10 mils	0.5-10 mils	0.5-10 mils	0.5-10 mils
Cure Cycle (metal temperatures)[b]	450°F - 3 min 250°F - 30 min	450°F - 3 min 325°F - 25 min	400°F - 7 min 310°F - 20 min	400°F - 7 min 350°F - 17 min	400°F - 7 min 360°F - 25 min
Outdoor weatherability	Poor	Poor	Very Good	Very Good	Excellent
Pencil Hardness	HB-5H	HB-2H	HB-2H	HB-3H	H-3H
Direct Impact Resistance, in-lb[c]	80-160	80-160	80-160	80-160	20-60
Adhesion	Excellent	Excellent	Excellent	Excellent	Excellent
Chemical Resistance	Excellent	Very Good	Good	Good	Very Good

[a] Thickness of up to 150 mils can be applied via multiple coats in a fluidized bed.
[b] Time and temperature can be reduced, by utilizing accelerated curing mechanisms, while maintaining the same general properties.
[c] Tested at a coating thickness of 2.0 mil.

surface to be coated is clean and free of grease, dust, rust, etc. In most cases, the parts are also subjected to treatments such as phosphating and chromatizing to improve the adhesion of the surface coating. After pretreatment and drying, the parts enter the spray booth. After the spray coating is applied, parts enter the curing oven to melt and cure the coating.

The following sections present information about the types of equipment that are available for each step in the process outlined above. Numerous manufacturers of powder coating equipment compete in today's market. Each has products that perform the same basic task. The discussions here are generic, in that manufacturers' brand names are not used, and will focus on the spray application of powder to a metal substrate. (Curing ovens used with powder coating systems are similar to those used for liquid coating lines.)

4.1 PRETREATMENT

Although the substrate pretreatment process is critical to achieving an acceptable powder coated finish, the need for good pretreatment is not unique to powder finishes. All industrial surface coatings require a substrate that is clean and dry. A wide range of pretreatment requirements is available for both powder and liquid coatings. The pretreatment process selected is a function of the characteristics of the coating, the substrate, and the end use of the product being coated. The pretreatment process is normally conducted in a series of spray chambers where alkali cleaners, iron or zinc conversion coatings, and rinses are applied. Parts of various size or shape may be cleaned with pressurized and/or heated sprays. Dip tanks may be used instead of spray for some applications. Powder coating lines usually incorporate a phosphate application step that adds corrosion protection and improves the adhesion of the coating to the substrate.

Pretreatments most often used in powder coating are iron phosphate for steel, zinc phosphate for galvanized or steel substrates, and chrome phosphate for aluminum substrates. After the parts have passed through all of the pretreatment steps, they are normally dried in a low temperature dry-off oven. After drying, the parts are ready to be powder coated.

4.2 POWDER APPLICATION

The powder coating application process makes use of four basic types of equipment: the powder delivery system, the electrostatic spray gun system, the spray booth, and the powder recovery system. The flow schematic is shown in Figure 1.

4.2.1 Powder Delivery System

Powder is supplied to the spray gun by the powder delivery system. This system consists of a powder storage container or feed hopper, and a pumping device that transports a mixture of powder and air into hoses or feed tubes. Pneumatic pumps driven by clean, dry compressed air are most often used because they aid in separating the powder into individual particles for easier transport. Each powder pump supplies powder to one gun, typically many feet from the powder supply. Delivery systems are available in many sizes. Proper selection depends on the application, number of guns to be supplied, and volume of powder to be sprayed in a given time period. Recent improvements in powder delivery systems, coupled with better powder chemistries that reduce clumping of the powder, have made possible the delivery of a very consistent flow of particles to the gun. Some feed hoppers vibrate to help prevent clogging or clumping of powders difficult to fluidize prior to entry into the transport lines.

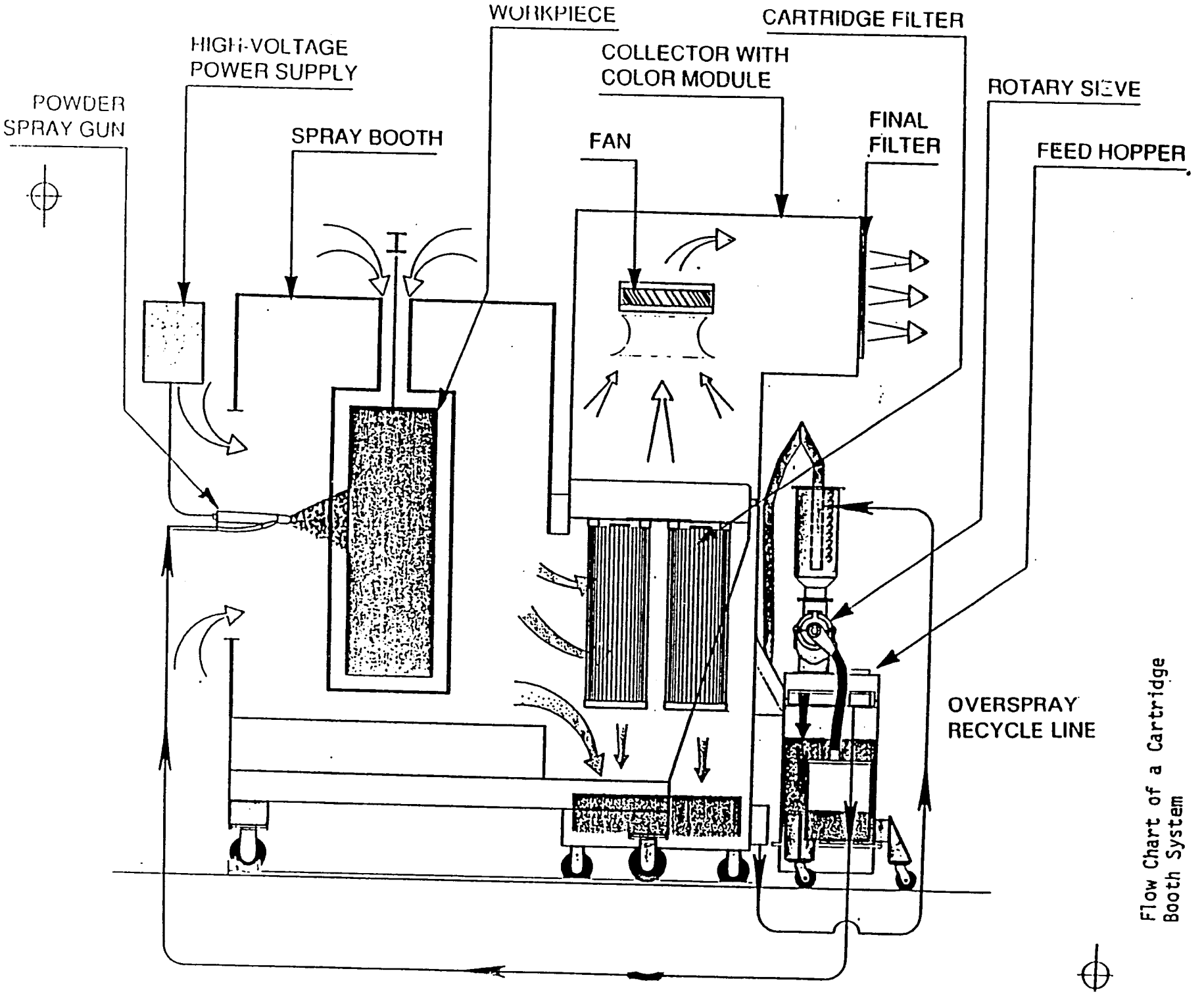

Flow Chart of a Cartridge Booth System

4.2 2 Electrostatic Spray Guns

Electrostatic powder spray guns direct the flow of powder; control the pattern size, shape, and density of the spray as it is released from the gun; impart the electrostatic charge to the powder being sprayed; and control the deposition rate and location of powder on the target. All spray guns can be classified as either manual (hand-held) or automatic (mounted to a fixed stand or gun mover). Both manual and automatic guns are manufactured by many companies. Although their basic principles of operation are similar, there is an almost limitless variety in style, size, and shape. The type of gun chosen for a given coating line can, thus, be matched to the coating characteristics needed for the products being coated.

Most common is for the electrostatic charge to be imparted to the powder particles after they exit the spray nozzle by a charging electrode located at the front of the gun. These "corona charging" guns generate a high-voltage, low-amperage electrostatic field between the electrode and the product being coated. The charge on the electrode is usually negative. Its strength can be controlled by the operator. Powder particles that pass through the ionized electrostatic field at the tip of the electrode become charged. Their flight to the substrate is influenced by the electrostatic field. The particles follow the field lines and air currents to the target workpiece and are deposited on the electrically grounded surface of the workpiece. One drawback to this type of gun is the relative difficulty of coating irregularly shaped parts that have recessed areas or cavities (that may be affected by the Faraday cage effect) into which the electrostatic field lines cannot reach. Because the powder particles are influenced by the presence of the field lines, deposition into recesses and cavities is more difficult, but can be overcome.

Another approach in electrostatic spray guns is the "tribo" electric gun. The powder particles in a tribo electric gun receive an electrostatic charge as a result of friction which occurs when powder particles rub a solid insulator or conductor inside the gun. The resulting charge is accomplished by stripping electrons from the powder, producing positively charged powder. Because there is no actual electrostatic field, the charged particles of powder migrate toward the grounded workpiece and are free to deposit in an even layer over the entire surface of the workpiece. Since there is no electrostatic field, the Faraday cage effect is minimized and deposition into recesses improved. However, each charging technology should be tested to determine the practical application for each unique situation.

Other improvements made to spray guns involve variations in the spray patterns to improve the efficiency with which they deposit powder on the substrate. Nozzles that are more resistant to clogging have also been introduced, along with ways to continuously clean charging electrodes. Spray guns with variable spray patterns are also available to allow the use of one gun on different parts and configurations. Innovations in spray gun design have also resulted in versatile and efficient guns with increased ease of operation. The spray equipment used for manual spraying is simple to control and use. Only a brief period of training is required before the painter can meet quality objectives.

4.2.3 Powder Spray Booths

The primary function of the powder spray booth is to safely contain the powder so that overspray cannot migrate into other areas. Several criteria must be met in selecting the appropriate spray booth for a given coating line. The entrance and exit openings must be properly sized to allow clearance of the largest product part. The airflows through the booth must be sufficient to channel all overspray to the recovery system, but not so forceful that it disrupts the powder deposition and retention on the part. This is usually accomplished by maintaining a minimum average face velocity of 100 ft/min across all end openings. If one

booth is to be used for multiple colors, the booth interior should be free of narrow crevices, seams, and irregular surfaces that would be difficult to clean. This is especially important if collected overspray is to be recycled.

Because there is no solvent loading of the air exhausted from a powder coating booth, the air can be circulated back into the plant. This saves considerable energy during winter months, compared with the energy required to heat makeup air to replace the solvent-laden air flow from a liquid paint booth.[9]

4.2.4 Powder Recovery and Recycle Systems

The powder recovery and recycle systems may or may not be an integral part of the spray booth. The economic efficiencies and environmental benefits associated with reuse of oversprayed powders has led equipment manufacturers to develop systems designed especially to accommodate powder recovery. Traditional spray booths for liquid coatings have either dry or wet filter systems to remove overspray from the exhaust air stream. The collected paint is typically of no value and is therefore discarded, usually at considerable expense since most solvent-based paint overspray meets the RCRA definition of Hazardous Waste.

Recovered powder is of greatest value if free of color contamination. When a single particle of a different color is cured on a part, it will not blend in but remains visible. Numerous systems are now available that segregate colors within the same booth. The systems make use of either cyclones or cartridge filter modules that are dedicated to each color and can be easily removed and replaced when a color change is needed. Color changes can be accomplished by disconnecting the powder delivery system, purging the powder lines, cleaning the booth, exchanging the cyclone canister or filter module used for the previous color with the cyclone canister or filter module for the next color, and connecting the powder delivery system for the new color. Equipment manufacturers have made significant design improvements in powder spray booths that both allow color changes to be made with a minimal downtime and allow the recovery of a high percentage of the overspray. As with spray guns, there are a large number of spray booth and powder recovery designs from which to choose, depending upon the exact requirements of a given finishing system.

4.2.5 Curing Ovens

There are three basic oven types normally used in the curing of powder coated parts: Convection, infrared, or a combination of the two. Convection ovens can be either gas or electric. Air is heated and circulated inside the oven around the powder coated parts. The parts attain the temperature within the oven.

Infrared (IR) ovens using either gas or electricity as their energy source emit radiation in the IR wavelength band. This radiated energy is absorbed by the powder and the substrate immediately below the powder but the entire part need not be heated to cure temperature. This allows a relatively rapid heat rise causing the powder to flow and cure when exposed for a sufficient time.

Combination ovens generally use IR as the first zone to melt the powder quickly. The following convection zone can then utilize rather high velocity currents since there is no danger of disturbing the powder. These higher velocities permit faster heat transfer and a shorter cure time.

41

4.3 COLOR CHANGEOVERS

Color change in a powder coating system can be accomplished in a relatively short period of time, about one minute when independent booths are moved on and off line. The off-line booth is cleaned while the on-line booth is in production. Adequate time must be allowed to clean an off-line booth before the next color change can occur.

As a result, equipment manufacturers have developed their own approaches to minimizing color change downtime. Color change in an automatic single booth system (eight automatic guns and two manual guns) will generally range from 15 minutes to one hour utilizing two people. Larger systems would require a proportionately longer time.

4.4 TRANSFER EFFICIENCY

Transfer efficiency is generally defined as the ratio of powder deposited on the part or parts to the total amount of powder sprayed. (This fraction is normally multiplied by 100 to express it in percent.) Recovered powder is not considered in this calculation. Many factors can affect transfer efficiency, including proficiency of the operator, shape of the part, booth design, condition of the spray equipment, part grounding, powder condition, and application techniques.

Powder's big economical advantage over liquid paints is that transfer efficiency is not also a measure of paint efficiency. The powder overspray can, with properly designed equipment, be captured and resprayed thereby raising powder utilization to almost 100 percent.

4.5 FILM THICKNESS

Powder coatings can be applied in a wide range of film thicknesses. Continuous films as low as 0.5 mils (0.005") can be applied, as can specialized applications that require as much as 10 mils or more. The very thin films will require special powder grinds. Extremely heavy films are generally achieved by coating the part while it is hot.

The normal range of the vast majority of applications would be 1.0-3.0 mils with an average target value of 1.5 mils. The part's function and its expected environmental exposure will usually dictate the type of coating material to be used and the desired film thickness.

4.6 PROCESS CONTROL IN POWDER APPLICATION SYSTEMS

Process control in powder application systems can be broadly classified into four major categories: gun movement, gun triggering, booth/recovery system monitoring, and flame detection.

The use of oscillators, reciprocators, and robots to control spray equipment reduces labor costs and provides more consistent coverage.

Gun triggering, or triggering the gun on and off using a device that can sense when the target is properly positioned, will reduce overspray material, which translates into lower material and maintenance costs. Automatic gun triggering can also have other benefits such as improved quality of the finish and reduced film build at edges.

In addition to controlling the gun functions, other booth and recovery system variables such as moisture in the air supply, powder level in the feed hopper, and routine diagnostic variables can be monitored using either a microprocessor or programmable logic controllers (PLC's).

Finally, it is mandatory in the U.S. that automatic systems include a flame detection device interlocked with the high-voltage power supply, conveyor, and application and recovery equipment. These devices cut off all electrical and pneumatic supplies within one-half second after detecting an ignition.

4.7 POWDER STORAGE AND HANDLING

Coating manufacturers recommend that powders be stored at temperatures below 80°F and for a maximum of six months.

5.0 END USES OF POWDER COATINGS

As can be seen in Table 2[10], the list of products currently being powder coated is extensive. There are certain market sectors where powder coatings have shown particularly strong growth rates. For example, powder coatings are being used extensively to produce linings on the inside of oil drilling pipe where severe pressures, high temperatures, and corrosive materials are too aggressive for all but a few types of coatings. The automotive industry is increasing its use of powder coatings for economic, quality, and ecological reasons. Powder is being used by some manufacturers for the exterior body intermediate coat - the primer-surfacer - as well as for finishing of underhood components. Parts that require extra protection as well as a decorative finish are increasingly being powder coated.. Wheels, bumpers, shock absorbers, mirror frames, oil filters, engine blocks, battery trays, and coil springs are some of the many automotive products being powder coated. Clear powder coatings, for use over automotive exterior basecoats, are now being developed for commercial application as an alternative to solvent-borne clear coats.

The appliance industry is the largest single market sector for thermosetting powders, accounting for about 21 percent of powder sales.[11] As porcelain-replacement powders become further developed, the appliance market will continue to grow. Current uses include range housings, freezer cabinets, dryer drums, and washer tops and lids.

Outdoor furniture, farm implements, and lawn and garden equipment are also major markets for powder coatings. The general metal finishing industry accounts for about 53 percent of thermoset powder sales.[11] (The general metal finishing industry is defined here as including all metal finishing industries <u>except</u> for the automotive, appliance, architectural, and lawn and garden finishing industries.)

Potential large market areas for powders are the aluminum extrusion and architectural products markets. The recent advances in polyester-TGIC and fluoro-polymer powders have enabled powder coatings to compete with liquid architectural coatings in durability, weatherability, and resistance to fading. Some of these coatings applied to building panels have been out in the field in Europe since 1976 with good results.

The custom coating sector is one of the fastest growing segments of powder coating, meeting the need for most of the sectors mentioned above. Of the estimated 3,000 powder coating systems in use in North America, 900 are custom coaters.

The Powder Coating Institute estimates that powder coating use in North America will grow from 74,560 tons in 1992 to about 117,946 tons in 1996. During this period, the projected

43

TABLE 2

END USES FOR THERMOPLASTIC AND THERMOSET POWDERS

METAL SUBSTRATES

AUTOMOTI · EXTERIOR:
Wheels
Luggage racks
Window trim
Truck tool boxes
Windshield wipers
Bumpers
Rally (roll) bars
Mirror brackets
Primer surfacer
Anti-chip primers
Radio antennas
Door handles
Air louvers

AUTOMOTIVE INTERIOR:
Ash trays
Speaker covers
Defroster vents
Steering wheels
Seat pedestals
Seat belt latches/mounts
Jacks/lug wrenches
Truck seat frames

AUTOMOTIVE UNDERBODY:
Engine blocks
Radiators
Suspension systems
Coil springs
Shock absorbers
Oil/air filters
Motor mounts
Intake manifolds
Valve covers
Brake assemblies
Battery trays
Pulleys
Fuel injector tubes
A/C components
Small motor components

METAL SUBSTRATES

AUTOMOBILE MISC.:
Boat trailers
Trailer hitches
Mobile home doors/windows
Motorcycles

MAJOR APPLIANCES:
Gas & electric ranges
Range hoods
Refrigerator doors, shelving, liners, & skins
Washer tops & lids
Dryer drums
Freezer cabinets
Water heaters

FURNITURE-HOME:
Bunk beds
Patio furniture
Kitchen tables/chairs
Chair frames & bases
Baby strollers/swings/ playpens, etc.
Folding chairs/tables
Barbecue grills
Metal cabinets
Bookends
Wire baskets

FURNITURE-COMMERCIAL/INSTITUTIONAL:
Chair bases/frames
Office partitions
Filing/storage cabinets
Lockers
Wastebaskets
Dentist chairs
Hospital beds
Examination tables
Copier cabinets
Stadium seating

SHELVING & RACKING:
Retail store shelving
Retail store racks
Point-of-display racks
Warehouse rack systems

METAL SUBSTRATES

HEATING/VENTILATION/AIR COND.:
Central A/C cabinets
Window A/C cabinets
Gas/electric furnace cabinets
Swimming pool heaters
Evaporation coolers
Space heaters
Air cleaners

INDUSTRIAL EQUIPMENT/MACHINERY:
Industrial mixers
Grain storage systems
Animal feeding units
Thickness gauges
Friction disk binders
Vending machines
Ice making machines
Irrigation pipes
Pay phones/booths
Electrostatic spray equipment
Escalator steps
Battery chargers
Air compressors
Pressure reserve tanks
Fans, shutters, louvers
Gas & electric meters
Drum rings
Food processing carts
Lobster traps
Hand trucks
Gasoline pumps
Sonar equipment

LAWN & GARDEN:
Riding mowers
Walk-behind mowers
Edgers
Fertilizer spreaders
Snowblowers
Garden tillers
Chain saws
Tractors

(continued on next page)

44

TABLE 2 (Continued)

END USES FOR THERMOPLASTIC AND THERMOSET POWDERS

METAL SUBSTRATES

HARDWARE:
Brass & metal door hardware
Brass bathroom fixtures
Closet organizers
Wire & metal shelving
Drapery hardware
Shower curtain hardware
Safe deposit boxes
Wine racks
Christmas tree stands
Notebook spiral wires
Luggage frames
Desk accessories
Mechanical pens/pencils
Thumbtacks
Wire cloth/screens
Water pumps
Water tanks
Steel drums
Scaffolding
Military hardware
Door thresholds
Alarm system bells
Propane tanks
Draw slides/suspension units
Camp stoves
Grapevine support poles
VCR cases
Water cans
Mailboxes
Screen doors
Aluminum doors/windows
Metal doors
Antennas
Gas cans
Pool hardware
Highway & other signs
Fence wire & poles
Guard rails
Building facade panels
Satellite dishes
Fire extinguishers
Parking meters
Aluminum extrusions
Post-formable tubing
Ornamental iron security doors

METAL SUBSTRATES

TOOLS:
Tool boxes & chests
Hand tools
Snowplow blades
Power tools
Steel carts
Hand trucks

LIGHTING FIXTURES:
Fluorescent lighting fixtures
Decorative lighting fixtures
Desk lamps
Yard lights
Light poles
Outdoor lighting fixtures

SMALL APPLIANCES:
Kitchen blinds
Kitchen mixers
Crock pots
Vacuum cleaners
Can openers
Floor care machines
Cigarette lighters
Microwave oven cavities
Fans
Speaker frames
Microphones
Tape player doors
Computer frames/cabinets
Bathroom scales
Automatic timers

SPORTS/RECREATION:
Playground equipment
Recreation vehicle hardware
Bicycle frames/wheels
Gas/electric golf carts
Golf clubs
Snowmobiles
Ski poles & ski parts
Metal toys
Wagons
Marine motors & drives
Archery bows
Exercise equipment

METAL SUBSTRATES

ELECTRIC COMPONENTS:
Motor windings & housings
Magnet wire
Electrical motor - stators/rotors
Computer room floor sys.

ELECTRICAL EQUIP.:
Transformers
Switch gear
Electric junction boxes
Electric connectors
Buss bars
Electrical instrument housings/cabinets

OTHER FUNCTIONAL COATINGS:
Petroleum transmission pipes
Oil well drilling pipes
Reinforcing bar for concrete
Rebar saddles
Cable-for prestressed concrete
Structural steel
Conduit
Truck splines
Dishwasher baskets
Military projectiles

NON-METAL SUBSTRATES

CERAMICS:
Decorative glass bottles
Flash bulbs
Instrument bulbs
Roofing tile

WOOD:
Toilet seats

PLASTIC:
Sinks/shower stalls
Automotive fascias
Automotive dashboards

45

annual growth rate for selected market areas is: automotive-9%, appliance-11%, architectural-9.5%, lawn and garden products-8%, and general metal finishing-12 %.[11]

6.0 ECONOMIC ADVANTAGES OF POWDER COATING VS. LIQUID COATINGS

When comparing powder coating systems with liquid coating systems, several significant advantages are readily apparent. There are also other, seemingly less significant advantages that, when viewed collectively, contribute substantial cost savings. This section discusses the economic advantages of powder vs. liquid coating systems in the following areas: energy savings, labor savings, greater operating efficiencies, and environmental benefits. A detailed cost comparison of powder vs. liquid coating systems also is provided at the end of this section.

6.1 ENERGY SAVINGS

There are two significant advantages of powder coating which contribute to lower energy costs as compared to liquid coating. The first is that the air used to exhaust the powder spray booth can be recirculated directly to the plant since the powder does not contain volatile compounds at room temperature. This eliminates the cost of heating or cooling the makeup air that occurs when air is exhausted from the plant with liquid spray painting operations, a particular advantage where seasonal weather conditions are extreme. The second advantage is the lower cost of heating the curing oven. Ovens that cure solvent-based coatings must heat and exhaust huge volumes of air to ensure that the solvent fumes do not approach the lower explosive limit. Because powder coatings have no solvent content, the required exhaust flow in the curing ovens is considerably lower resulting in energy savings even when higher cure temperatures are involved.

6.2 LABOR SAVINGS

The required operator skills and training for operation of a powder coating system are less than those needed for a liquid system and considerably less than those required for an electrocoat system. Powder is "ready to use" when purchased and does not require labor for mixing with solvents or catalysts as is necessary with liquid coatings. Also, there are no critical operating parameters to monitor such as viscosity and pH (which are monitored in many liquid coating systems) or percent solids, specific resistance, and binder to pigment ratio, (which all must be monitored in electrocoating systems). Additionally, powder systems lend themselves well to automation. Since powder coatings do not run, drip, sag, or have solvent pops, a wider variety of parts can be coated automatically.

6.3 GREATER OPERATING EFFICIENCY

Because no drying or flash-off time is required, and the powder application system allows parts to be racked closer together on a conveyor, more parts can pass through the production line resulting in greater operating efficiency and lower unit costs. Despite the greater line speeds, powder coating systems generally have significantly lower reject rates than do liquid coating systems. One reason for this lower reject rate is that it is virtually impossible to have drips, runs, or sags when applying powder coatings. Additionally, because booth air exhaust may be returned to the spray room, it is practical to reduce rejects caused by airborne contamination by enclosing the spray room and keeping it under slightly positive pressure while air conditioning and filtering the air. If, prior to entering the cure oven, a powder coated part is found to be improperly sprayed, the powder can be blown off with an air gun and the bare part recoated. Another factor which contributes to a greater operating efficiency is the fact that oversprayed powder can be reclaimed and reused, and material usage is minimized.

46

6.4 ENVIRONMENTAL BENEFITS

As regulatory agencies further limit the amount of solvent and hazardous air pollutants (HAP's) that can be emitted, many plants that use liquid coating systems are finding it necessary to purchase VOC control equipment, such as afterburners, to incinerate the emitted solvents and HAP's. Another environmental problem faced by liquid coating users is the increased difficulty and cost of disposing of hazardous waste generated by liquid coating overspray. With a dry powder coating system, there is no liquid paint sludge to send to a disposal site.

6.5 COST COMPARISON: POWDER VS. LIQUIDS

A detailed cost comparison between powder and liquid coating systems is provided below. The three types of liquid coating systems included in the comparison are: conventional solvent, water-borne, and high solids. Total capital and annual operating costs are provided for each of the four coating systems. Material costs represent two-thirds or more of the total annual operating costs, and therefore, detailed material costs are also provided.

6.5.1 Total Capital Costs

Capital costs for four different coating systems (i.e. conventional solvent, water-borne, high solids, and powder) are presented in Table 3. The source of these costs is a reprint from Products Finishing entitled "Powder Coating Advantages" (1991), generated by The Powder Coating Institute.[12] "Powder Coating Advantages" is an updated version of the 1987 publication "Powder Coating Today." These cost estimates are consistent with estimates provided by powder coating equipment suppliers in response to questionnaires submitted by the EPA.

Powder coating equipment that cost $150,000 in 1983[13] could be purchased for $145,000 in 1990. The "Powder Coating Advantages" article includes a carbon absorber in the cost of the conventional solvent-borne liquid coating system.

The capital costs presented in Table 3 are based on the following assumptions:

1. The parts to be coated are formed sheet steel parts that are of average complexity;
2. Both sides of each part are automatically coated and touched up manually;
3. Two colors are used;
4. There is a production rate of one million square feet of surface coated per month based upon a five-day week, one-shift operation;
5. Conveyor speed is 15 ft/min;
6. The installation is new and has automatic equipment to efficiently apply either a conventional solvent, water-borne, high solids, or powder coating;
7. A carbon absorber for emission compliance (cost $96,000) is added to the system applying conventional solvent-borne coatings to satisfy emission regulations; and
8. The same pretreatment systems and ovens can be used with each system with little or no modification.

6.5.2 Material Costs

Materials costs for the four coating systems are presented in Table 4; these costs are based on two different sources of information. Both sources calculated the material costs in a similar manner with the higher solids system generally having a lower unit volume material cost. The most complete and up-to-date source of cost information is the aforementioned "Powder Coating Advantages" article (Reference Nos. 15 and 17 in Tables 4 and 5). Costs obtained

TABLE 3. TOTAL CAPITAL COSTS[12]

Type of Coating	Equipment	Capital Cost
Conventional Solvent	2 Waterwash Booths	$115,000
	1 Dry Filter Booth	
	8 Automatic Guns	
	2 Manual Guns	
	2 Reciprocators	
	Paint Heating Equipment	
	Carbon Absorber for Emission	$ 96,000
	Compliance	$211,000
	Total	
Water-borne	2 Waterwash Booths	$120,000
	1 Dry Filter Booth	
	8 Automatic Electrostatic Guns	
	2 Manual Electrostatic Guns	
	2 Reciprocators	
	Safety Interlocks and Standoffs	
High Solids	2 Waterwash Booths	$115,000
	1 Dry Filter Booth	
	8 Automatic Electrostatic Guns	
	2 Manual Electrostatic Guns	
	2 Reciprocators	
	Paint Heating Equipment	
Powder	1 Booth with 50 sq. ft. opening	$145,000
	8 Automatic Guns	
	2 Manual Guns	
	2 Reciprocators	
	2 Reclaim Stands with Automatic Reclaim	
	2 Collectors	
	Fire Detection	

4

TABLE 4. MATERIAL COSTS, DOLLARS

Item	Ref. #	Conventional Solvent	Water-borne	Higher Solids	Powder[a]
Coating cost, $/gal	(14)	---	---	21.00	2.40
	(15)	11.00	12.40	17.25	2.35
Volume solids, %	(14)	---	---	54	98
	(15)	43	35	63	98
Reducing agent cost, $/gal	(14)	---	N/A	N/A	N/A
	(15)	2.00	N/A	N/A	N/A
Mix ratio (coating: reducing agent)	(14)	---	N/A	N/A	N/A
	(15)	4:1	N/A	N/A	N/A
Mixed coating costs, $/gal	(14)	---	---	21.00	2.40
	(15)	9.20	12.40	17.25	2.35
Volume solids at spray viscosity, %	(14)	---	---	54	98
	(15)	34.4	35	63	98
Specific gravity	(14)	---	---	---	1.6
	(15)	---	---	---	1.6
Theoretical coverage, ft^2/gal/mil	(14)	---	---	866	118
	(15)	552	561	1,011	118
Dry film thickness, mils[b]	(14)	---	---	1.2	1.5
	(15)	1.0	1.0	1.0	1.5
Transfer efficiency, %[c]	(14)	---	---	80	95
	(15)	45	55	60	96
Actual coverage, ft^2/gal	(14)	---	---	577	75
	(15)	248	309	607	76
Applied cost, $/$ft^2$	(14)	---	---	0.0364	0.0320
	(15)	0.0371	0.0401	0.0284	0.0309
Annual cost to coat $12x10^6$ ft^2, $	(14)	---	---	436,800	384,000
	(15)	445,200	481,200	340,800	370,800

[a] Substitute pounds for gallons in all calculations.
[b] Coating thicknesses were normalized to put costs on a common basis.
[c] Transfer efficiency is the ratio of coating that adheres to the part and the coating that is sprayed through the gun. In the case of powder coating, where powder is recovered and recycled, the term "utilization efficiency" is used.

44

from the User's Guide To Powder Coating (1987) (Reference No. 14) were included in Tables 4 and 5 for comparison purposes. (Note that in Table 4, the columns for powder costs are in terms of lb. rather than gal.)

The material costs presented in Reference Nos. 15 and 17 are based on 1990 data and the following assumptions:

1. The conventional solvent-borne baking enamel price represents a material with 43 percent (by volume) solids applied at an average thickness of 25 μm (1.0 mils);
2. The water-borne acrylic price is based upon a 35 percent (by volume) solids material applied at an average thickness of 25 μm (1.0 mils);
3. The higher solids coating is a general purpose polyester at 63 percent solids applied at an average thickness of 25 μm (1.0 mils); and
4. The powder coating is a general-purpose polyester powder applied at an average thickness of 30 μm (1.2 mils).

These dry film thicknesses were set at levels that are believed to be representative of current industry practices.

6.5.3 Total Annual Operating Costs

The total annual operating costs for the four coating systems are presented in Table 5. All literature references used to create Table 5 identified powder coating as having the lowest annual operating costs. The highest operating costs were associated with the conventional solvent or water-borne coating systems. Labor, cleanup, maintenance, energy, and waste disposal costs were lowest for the powder coating system, which contributed to overall lower annual operating costs. The "Powder Coating Advantages" article (Reference No. 17) again provided the most complete and up-to-date information on annual operating costs. The operating costs presented in that brochure are based on 1990 data and the following assumptions:

1. Labor costs $14.55 per hour and supervision costs $18.45 per hour;
2. Cost of electricity = $0.085 per kWh;
3. Cost of natural gas = $3.23 per thousand ft^3; and
4. Removal of nonhazardous paint sludge was estimated to cost $300 per 55-gal drum.

The material costs for any of the four coating systems could be less than those shown if either the volume solids and/or transfer efficiency is increased and/or the film thickness lowered. For example, if the transfer efficiency for the higher solids case (Reference 15, Table 4) is increased from 60 to 70 percent, the annual materials cost to coat will drop from $340,800 to $292,500. The annual cost to coat = [(coating thickness) (mixed coating cost) (surface area coated per year)] / [(theoretical coverage) (utilization efficiency)]. Likewise, if the powder coating thickness in Reference 15 (Tables 4) were decreased from 25 to 20 μm (1.0 to 0.8 mils), the material cost would drop from $340,800 to $272,970.

It should be noted that, currently, the minimum consistent powder coating film thickness is in the range of 10-15 μm (.5 mil). If the product can perform satisfactorily with a thinner film, the extra cost of applying more powder than necessary should be considered when comparing alternative coatings.

TABLE 5. TOTAL ANNUAL OPERATING COSTS, DOLLARS[a]

Item	Ref. #	Conventional Solvent	Water-borne	Higher Solids	Powder
Material, $/yr	(16)	---	---	436,800	384,000
	(17)	445,200	481,200	340,800	370,800
Labor and clean-up, $/yr	(16)	---	---	111,400	85,200
	(17)	160,200	160,200	160,200	98,600
Maintenance, $/yr	(16)	---	---	11,840	5,060
	(17)	29,300	29,300	29,300	17,000
Energy, $/yr	(16)	---	---	38,474	34,905
	(17)	21,400	22,800	19,900	11,525
Sludge disposal, $/hr	(16)	---	---	8,460	N/A
	(17)	50,100	33,300	27,300	975
Filter replacement, $/hr	(16)	---	---	1,920	N/A
	(17)	---	---	---	---
Amortization, 10-yr straight line, $	(16)	---	---	---	---
	(17)	21,100	12,000	11,500	14,500
Total annual cost, $[b]	(16)	---	---	594,670	497,310
	(17)	727,300	738,800	589,900	513,400
Applied cost, $/ft²	(16)	---	---	0.0508	0.0425
	(17)	0.0606	0.0616	0.0491	0.0428

[a] Assumed 2,000 operating hours per year.
[b] Numbers have been rounded.

7.0 CONCLUSIONS

The use of powder coatings as functional and decorative industrial finishes is increasing at a dramatic rate. At an annual rate of 12 percent, powder coating is the fastest growing finishing technology on the market.[1] (Sales volumes of powder coatings are much smaller than liquid coatings, so a direct comparison of growth rates is not meaningful.) Significant improvements in powder coating materials and application, and powder recovery systems have made powder one of the most cost effective finishing systems available. In addition, because powder coatings contain no solvents and overspray can be recovered and recycled, air and water pollution problems are eliminated in well-operated facilities. Energy costs attributable to heating and ventilation are significantly reduced.

The use of powder coatings as an alternative to liquid, solvent-based coatings results in a significant decrease in VOC and HAP emissions. Powder coatings can be characterized as the lowest VOC-content coating among the compliance options available to industrial finishers. Table 6 presents a VOC reduction comparison of the four coating systems reviewed in Section 6. The values in this table were based on the average of the values presented in Table 4. As shown in Table 6, VOC emissions for powder coating systems are 98.4 percent lower than those for conventional solvent coating systems, 98.1 percent lower than those shown for higher solids systems, and 97.7 percent lower than for water-borne systems.

Most of the drawbacks to the use of powders that existed a few years ago (see Section 2) have been eliminated. New resin systems allow powders to meet the coating specifications for almost any application. Thin films (from less than 25 um [1 mil] to about 76 um [3 mils]) in a very wide range of colors, glosses, and textures can be applied at powder utilization rates of 95 percent or higher.[18] Many of these coatings can be cured at temperatures of 121°C to 177°C (250°F to 350°F) in 15 to 30 minutes.[6] Powder manufacturers are continuing to work toward perfecting resin and curing agent designs that will allow lower cost coatings and low temperature cure coatings. Low temperature curing powders allow for higher line speeds, and expand the list of potential substrates to plastics, wood, and heat sensitive products like automobile shock absorbers.

Significant advancements are also being made in the weatherability of powders for use in automotive and architectural applications. Clear powder coatings are used for a wide range of applications in a number of markets, including the automotive industry, where clear polyester and acrylic powders are being used to finish wheels. Powder resin systems are now available that provide the exterior durability properties required of an automotive exterior body topcoat.

Recent and ongoing developments in the equipment used for powder application have significantly reduced the time, effort, and capital cost required for color changes. Properly designed powder systems can change colors in minutes. Currently, high-production powder systems apply more than 20 different colors, with several color changes per day.[19]

Coil coating technology for powder continues to be developed. Coil coating is the coating of flat metal sheet or strip that comes in rolls or coils. The metal is coated on one or both sides on a continuous production line basis.

An in-mold powder coating process has been developed in which powder coating material is sprayed onto a heated mold cavity before the molding cycle begins. When the molding operations are performed, the powder coating chemically bonds to the molding compound and

92

produces a product with a coating that is chip and impact resistant.

The powder coating of pre-cut metal blanks which are then post-formed prior to final assembly remains a strong growth area for powder, with high transfer efficiency and uniform film thickness. [20]

Advances in microprocessors, robotics, and infrared curing technology are allowing increased production in powder coating facilities. All of these advances, plus the inherent advantages of working with powder, ensure that powder coatings will have a permanent and ever-increasing share of the finishing market.

TABLE 6. VOC REDUCTION COMPARISON[a]

	Conventional Solvent	Water-borne	Higher Solids	Powder Coating
Volume solids at spray viscosity, percent[b]	34.4	35	58.5	98
Volume VOC content, percent [c d]	67	16	40	1
Actual coverage, ft^2/gal (ft^2/lb for powder)[e]	248	309	592	75.5
VOC emissions, tons/yr[f]	38	26	31	0.6

[a] Assumed 12×10^6 ft^2 of parts coated per year.
[b] Average of values presented in Table 4b.
[c] Assumed density of solvent equals 7.36 lb/gal.
[d] Water-borne coating VOC content assumed to be 25 percent of the nonsolids portion.
[e] Average of values presented in Table 4b. Based on transfer efficiencies presented in Table 4b.
[f] Control device assumed for conventional solvent with overall efficiency of about 70 percent (based on capture efficiency of about 75 percent and destruction efficiency of about 95 percent). All other systems assumed to have no control device.

8.0 REFERENCES

1. Bocchi, G.J. "Powder Coatings - Markets and Applications." Prepared for presentation at the European Coatings '93 Conference and Trade Show. 1993. p.1

2. Reference 1, p. 26.

3. Miller, E.P. and Taft, D.D. Fundamentals of Powder Coating. Society of Manufacturing Engineers, Dearborn, Michigan. 1974. p. 13.

4. Reference 1, p. 25.

5. User's Guide to Powder Coating, Second Edition. Society of Manufacturing Engineers, Dearborn, Michigan. 1987. p.12.

6. The Powder Coating Institute "Technical Brief No. 1." January 1986. (Revised 1994.)

7. "Electrostatic Powder Coating." Dow Chemical Europe. Undated brochure. p. 7.

8. "Sigma Coatings, The Specialist in Exterior Paint Systems, Introduces Sigma PVDF, a New Generation of Powder Coatings." Sigma Coatings, Industrial Coatings Division, NL-3700 AC Zeist. Undated brochure.

9. Montenaro, D. "Economics of Powder Coating." In: Conference Proceedings, Powder Coating '88. Sponsored by The Powder Coating Institute. November 1-3, 1988. p. 9-7.

10. Gill, D.E. "Powder Coatings and Their Uses." Metal Finishing. August 1988. p. 41. (Revised 1993 by The Powder Coating Institute.)

11. Reference 1, p. 1-17.

12. Bocchi, G.J. "Powder Coating Advantages. Reprint from Products Finishing. 1991. p. 5.

13. Cole, G., Jr. "VOC Emission Reductions and Other Benefits Achieved by Major Powder Coating Operations." The Powder Coating Institute. (Presented at the Air Pollution Control Association Meeting, San Francisco, June 24-29, 1984). p. 13.

14. Reference 5, p. 25.

15. Reference 12, p. 6.

16. Reference 5, pp. 27-28.

17. Reference 12, p. 8.

18. Reference 5, p. 3.

19. "Why Powder Coat? A Practical Guide to Powder Coating." Volstatic, Inc., Florence, Kentucky. Undated brochure, p. 1.

20. Reference 1, pp. 33-35.

54

THE POWDER COATING INSTITUTE

2121 Eisenhower Avenue • Suite 401 • Alexandria, VA 22314 • (703) 684-1770
FAX (703) 684-1771

MATERIALS AND PUBLICATIONS AVAILABLE FROM THE POWDER COATING INSTITUTE

The materials and publications listed below help promote the utilization of powder coating. Orders may be placed by sending the attached request form with payment in U.S. funds to: The Powder Coating Institute, 2121 Eisenhower Avenue, Suite 401, Alexandria, Virginia, 22314.

POWDER COATING VIDEOTAPE

"Powder Coating..Technology of the Future..Here Today" This ten-minute videotape discusses the advantages of powder coating in terms that mean business to a metal finisher. Designed for an audience already familiar with the general methods and terminology of metal finishing, this video delivers a strong message. With professional photography and lively graphics the program illustrates the wide variety of powder applications and highlights the environmental and economic advantages of powder coating. Available in 1/2-inch VHS format.

Price for member and non-member - $10.00 Includes postage and handling

POWDER COATING VISUAL SMOOTHNESS STANDARDS

The PCI Powder Coating Visual Smoothness standards provide a good representation of the normal degrees of smoothness achievable with powder coatings. This set of ten panels with flow (orange peel) ratings from one through ten, was developed by PCI and is produced, and held in inventory, by Advanced Coating Technologies, Inc. The panels are packaged in a compact, bound folder for protection and convenience in handling.

Non-member price:	**$370 per set**
Affiliate member price:	**$360**
Company member price:	**$350**

POWDER COATING SYSTEM TROUBLESHOOTING GUIDE

A useful guide for identifying and solving most common operational problems which may occur in a powder coating system, these laminated pages are ready to be used in the finishing room by your company's technicians. Published in a trouble/cause/solution format, this guide addresses powder supply, booth and recovery equipment, oven and washer problems.

Non-member price:	$25.00*	(Include $2.00 per book
Affiliate member price:	$20.00*	ordered for postage
Company member price:	$15.00**	and handling)

TROUBLE SHOOTING SLIDE SETS

This set of 114 slides with accompanying script, cover most potential powder coating system problems including poor powder charging, inadequate powder penetration, powder feed problems, surface contamination, poor recovery percentages and other subjects. This slide presentation is keyed to the major portions of the Troubleshooting Guide so they may be used in combination or as "stand alone" training tools.

Non-member price:	**$250.00**
Affiliate member price:	**$175.00**
Company member price:	**$150.00**

POWDER COATING TEST PROCEDURES

#1 Accelerated Stability Test - Powder Coating
#2. Compatibility of Coating Powders
#3 Contrast Ratio - Powder Coatings
#4 Density of Powder Coating Materials
#5 Measurement of Melt Viscosity of Powder Coating Materials
#6 Gel Time Reactivity
#7 Inclined Plate Flow
#8 Solvent Cure Test
#9 Volatile Content

$5.00 each or $40.00 for the entire set of 9 Test Procedures

USER'S GUIDE TO POWDER COATING

This comprehensive text provides an in-depth look at specifying and using powder coatings. Topics covered include powder coating materials, economic advantages of powder coating, surface preparation, methods of applying powder coatings, powder recovery systems, the operation of powder coating systems, troubleshooting, future application technology and more.

Non-member price:	**$24.00***
Affiliate member price:	**$22.00***
Company member price:	**$14.00***

***(Include $2.00 per book ordered for postage & handling)**

THE POWDER COATING INSTITUTE TECHNICAL BRIEFS

The PCI has developed, to date, 21 Technical Briefs detailing issues specific and important to the powder coating industry.

Non-member price - $30.00 per set incl. postage and handling

THE PCI INFORMATION BROCHURE & POWDER [illegible] BROCHURE

The Information Brochure is [illegible]omplete listing of all PCI company members, the product and [illegible]ices they provide and how to contact them.

The Powder Coatings brochure is an information packed, sharp looking four panel brochure whihc describes in simple terms the powder coating process, how it works along with its advantages.

The Information Brochure is free of charge.

THE PCI SLIDE GUIDE COST ESTIMATOR

One side is designed for calculating the cost of using a liquid finish, and the other side is for calculating the cost of using a powder coated finish. This handy, easy-to-use guide makes a great giveaway item for your clients and customer.

The Powder Coating Brochure and Slide Guide Cost Estimator is free for a single copy. Please contact PCI headqurters for pricing details on multiple copies.

****

PCI ORDER FORM

Please send me the following items:

___ Videotape
___ Visual Smoothness Standard
___ User's Guide To Powder Coating
___ Trouble Shooting Guide
___ Trouble Shooting Slide Set

Test Procedures
___ Entire Set
Individual Test Procedure(s) #(s)
____Tech Briefs

____ Please send me your Information Brochure
____ Please send me your Powder Coating Brochure
____ Please send me your slide guide cost estimator.

Name _____ Company _____
Address _____ Phone (____)_____
City _____ State _____ Zip _____

Please send form with payment in U.S. Funds to: The Powder Coating Institute, 2121 Eisenhower Avenue, Suite 401, Alexandria, VA 22314.

Quality Assurance in Powder Coating

QUALITY ASSURANCE IN ANY powder coating application is an integral part in providing your customers with quality parts. Any job shop or small manufacturer should be practicing some form of quality control. If not, we hope this will assist you in implementing a program.

Before being distributed to our customers our powder coatings go through extensive quality control procedures and records are maintained on all batches produced. This is to assure our customers they are getting the highest quality product.

Any powder coater can easily initiate a program at a very low price and the payback is very high—reduced refinishing, increased productivity and quality, etc.

First, let's look at what we would consider a minimum program. To begin with, the first thing when changing over to a new color and a new batch, is to coat a test panel (aluminum or steel). Once the test panel has been cured (at the recommended time and temperature), the panel should be subjected to a "MEK" (Methyl Ethyl Ketone) test. This is done by taking a cotton swab with "MEK" on it and wiping back and forth on an area of the panel. If the swab shows no discoloration, the powder has been fully cured. Also, the area on the panel should show no or minimal loss in gloss. If discoloration is noticed, increased cure time or temperature or maybe both are required. The procedure is then repeated.

The second test to perform on the test panel is the Cross Hatch Adhesion Test. This is done by cutting an equal number of lines horizontally and vertically approx. .04 inches apart to create small squares on the test panel. (Equipment required: razor blade and ruler). Next a piece of masking tape is then put over the small squares, rubbed and then peeled off. If none of the squares come off, the substrate to powder bond is good, meaning the part was cleaned and pretreated (phosphate, chromate, etc.) properly. If three or more squares come off, the panel was not cleaned and pretreated correctly. Make necessary adjustments.

Now the panel should be checked for film thickness with a thickness gauge. As a general rule, 3.0 to 4.0 mils is a good start.

Now that this panel has been tested, it should be compared to the master panel or color chip. If the color is okay, it should be filed (write down powder manufacturer, batch, mil thickness and date tested). All of this should take no more than 30 minutes.

Parts should be monitored visually throughout production, for coverage and checked with a thickness gauge to monitor film thickness. All of this can be documented (customer, part number, quantity, reading of parts checked, date) and then filed.

Finally, areas should be kept clean (less possibility of contamination), equipment should be checked regularly and maintained per manufacturer's recommendations. Maintainance of equipment requiring calibration should be performed regularly.

This vested time and effort together with its relatively small financial investment will yield the results mentioned earlier, and therefore will increase your bottom line.

Architectural Powder Coatings: A Review of World Technical and Market Status

Matthew F. Osmond

Powder coating is a rapidly growing segment of the surface finishing industry. Its advantages include relative ease of application, quick clean-up and less environmental regulatory pressure. The following article is an edited version of the text of just one of the many outstanding technical presentations made at Powder Coating '94, October 11–13, in Cincinnati, reprinted here with permission. *Copyright © 1994, The Powder Coating Institute. All rights reserved.*

The use of powder coatings for the protection and decoration of architectural aluminum is continuing to grow in popularity worldwide. The recent introduction of new technologies is accelerating this growth in North American, Far Eastern and Australasian markets.

This article will review current world market position. Particular reference will be made to new powder developments, including high-durability systems, and the latest results from field experience will be presented, including information on corrosion prevention. Technical and economic benefits to end users will also be compared with competing technologies.

Architectural powder coatings have now been used around the world for more than 20 years. By providing excellent functional and cosmetic protection, powders have become increasingly popular. Architects appreciate the choice it gives them in design, and powder users like the relatively simple application process.

Until recently, the technology of thermosetting polyester powders had, in fact, changed relatively little. The last few years, however, have witnessed exciting advances in all the principle elements of the architectural powder coating system. There have been developments in pretreatment (*e.g.*, non-chromium), new powder chemistries (*e.g.*, TGIC-free and super weatherability), new design and fabrication techniques (*e.g.*, thermal breaks and structural glazing) and novel powder application methods for aluminum extrusions (*e.g.*, vertical lines).

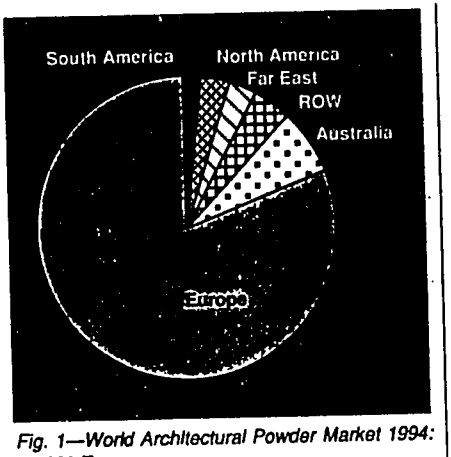

Fig. 1—World Architectural Powder Market 1994: 26,000 Tons

The Architectural Powder Coating System

To ensure the successful protection of architectural metal, it is important to consider the entire system. The aluminum, pretreatment, or finish cannot be considered in isolation. And, even though powder manufacturers can only directly control the paint formulation, they must work closely with other suppliers and also direct their research programs to take all factors into account.

The correct combination of these elements can then provide the appropriate corrosion resistance, exterior weatherability and the most economic method of finishing architectural aluminum extrusions and panels.

Environmental Issues

In the architectural sector, specific challenges are continuing to drive progress toward increased environmental acceptability of architectural systems. Aluminum, because of its recyclability, is preferable to PVC, and correctly designed, thermally insulated glazing systems save energy.

In this article, the study of environmental impact is split into two categories: The impact of the paint finish, itself, and influences from other stages of the finishing processes.

Atmospheric Pollution

Powder coatings have, in all markets, benefitted from their inherent advantage of being solvent-free. By virtually eliminating volatile organic compounds (VOCs), the atmospheric emissions are reduced, as are the health and safety risks associated with working with flammable solvents.

This key characteristic continues to assist the growth in the use of powder in such countries as the U.S. Restrictions on VOCs are increasing and, in certain states, local regulatory authorities now refuse to grant licenses for the operation of new plants applying solvent-containing paints. This is particularly relevant with the advent of the super-durable powders, which can now provide a technical option to replace relatively low-solids-fluorocarbon wet paints.

Non-chromium Pretreatment

In the case of architectural finishing, other aspects of the process are now coming under scrutiny. All leading architectural standards (Fig. 3) still require a multi-stage cleaning and conversion process. The use of chemical pretreatments containing either amorphous chromium phosphate or amorphous chromate is mandatory.

Chromium pretreatment has a long and proven track record around the world. After thorough cleaning of the aluminum, the conversion of its surface with chromate ions provides both enhanced paint adhesion and resistance to under-film corrosion, if subsequent damage occurs. Traditional processes use hexavalent chromium, either as

51

Process	Key Factors Affecting Performance
Aluminum	***Aluminum*** • *Grade and Flexibility* • *Impurities and Trace Elements*
Chemical Cleaning & Pretreatment	***Pretreatment Type*** • *Chromium (Yellow or Green)* • *Non-chromium Method* • *Spray or Dip Rinse* • *Use of Demineralized Water*
Spray Application	***Powder*** • *Electrostatic Charge Properties* • *Particle Size Application* • *Vertical or Horizontal* • *Tribostatic*
Baking	***Cure Properties*** • *Low Bake* • *Universal Bake* • *Over-bake Resistance*
Fabrication	***Use of Pre- or Post-thermal Breaks*** • *Temperature Stability of Thermal Break* • *Temperature Stability of Finish* • *Adhesion of Thermal Break* ***Structural Glazing Adhesives*** • *Adhesion of Sealant*
Building	***Weatherability of Finishing*** • *Polymer Backbone* • *Curing Agent* • *Pigments* ***Durability of Finish*** • *Resistance to Damage* • *Flexibility*

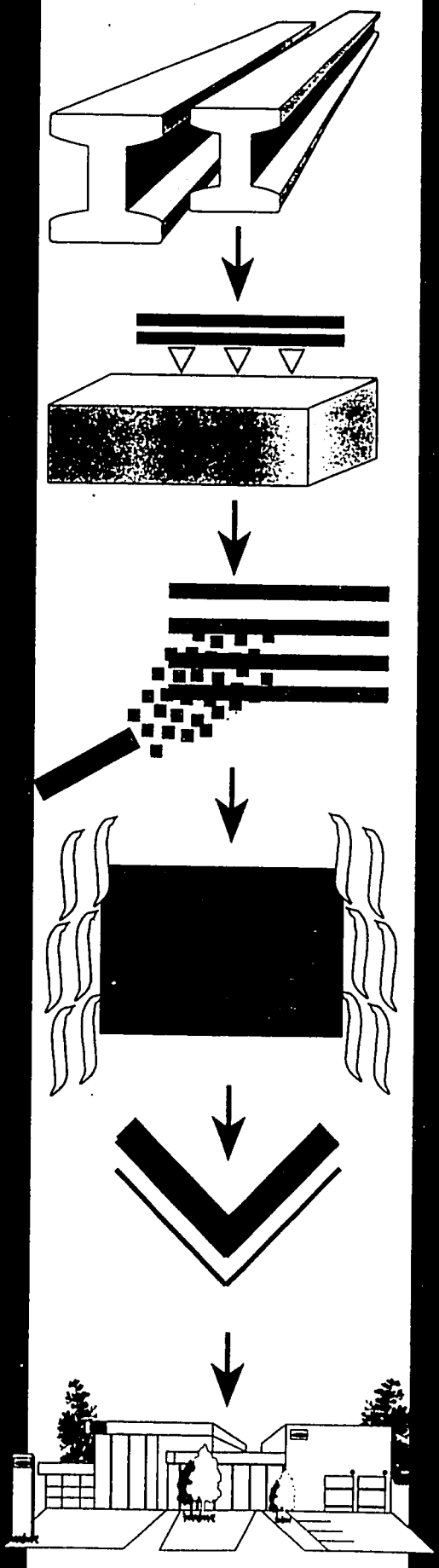

Fig. 2—The Thermoset Powder Coating Process.

60

Australia	Australian Standard AS3715-1989[1]
Europe	British Standard BS6496-1984[2]
	GSB RAL RG631-1994[3]
	Qualicoat-1994[4]
South Africa	SABS-1993[5]
U.S.	AAMA 603.8-92[6]
	AAMA 605.2-92[6]

Fig. 3—World Architectural Standards.

chromium chromate (yellow) or chromium phosphate (green).

Of all materials used in metal pretreatment, those containing hexavalent chromium probably require the most-stringent treatment, as the amount of hexavalent chromium allowed in discharges by most authorities varies from 0 to less than one ppm.[7]

The treatment of chromate-containing wastewater can very successfully process chromate ions and minimize effluent. It is a two-stage process, involving the reduction of hexavalent chromium to the trivalent state, which is then precipitated by adding alkali.

As with all environmental issues, however, the ultimate target should be to remove the initial hazard. Pretreatment suppliers have, therefore, been working on alternative chemistries (*e.g.*, based on titanium or zirconium) that do not rely on the use of chromium. To date, a number of potential systems have been developed. Though current standards still do not allow their use, the soon-to-be-published European Standard (CEN) will allow an option for suitable non-chromium products.

Determining long-term life expectancy of the new systems has been the key problem so far. Direct comparisons with chromium systems using, for example, acetic acid salt spray or pressure cooker tests, have identified potential candidates.

It has been found with some of the new systems, however, that, although laboratory-prepared samples give good results, it has proven difficult to replicate the performance on actual plants.

Standard authorities are also evaluating potential candidate systems with a view to modifying their specification. It is also likely, because of the variety of chemistries being suggested, that specific proprietary systems will be tested and approved (as with finishes), instead of generic recommendations. Also, tests are to be included in evaluations of all pretreatment systems for the reported phenomenon of filiform corrosion,[8] currently of concern to the European coating industry.

Advances in Technology

TGIC-free Systems

The most popular powder coatings used for architectural finishes are of the thermosetting type. They are formulated with exterior-grade polymers that react with chemical co-reactants during baking, to form a hard, tough, durable finish.

The main chemical components used to form the film are based on carboxyl-functional polyester resins, cured with triglycidyl isocyanurate (TGIC). This use of a very-low-molecular-weight epoxy-functional co-reactant allows a relatively high proportion of the ultra-violet (UV)-resistant polyester to be included in the powder formulation.

TGIC, a tri-functional epoxy, reacts with the carboxyl group on the polyester, to form an ester linkage. A typical ratio of components is 93:7 polyester and TGIC, respectively. After addition of pigments and other additives, TGIC is, therefore, typically contained in the powder at less than five percent by weight.

As part of ongoing work to confirm the suitability of all raw materials, information became available from raw material suppliers on the toxicology of TGIC and powders that contain TGIC. These findings indicated that TGIC, when tested on laboratory animals, can be toxic or can cause mutations in the male's reproductive system. If suitable handling precautions are observed and good practice applied during powder application, powders containing TGIC can be used safely. To sustain and enhance powder coating's rightly deserved reputation as environmentally sound, however, powder manufacturers have developed systems that do not rely on the use of TGIC.

Various approaches for the removal of TGIC were considered. Polyurethanes appeared to be an obvious solution, but, because of the presence of isocyanate co-reactant, neither external "blocking," using caprolactam, nor internally blocked isocyanates can entirely remove the hazard of free isocyanates.[9]

Acrylics could be used, also, but, these films are generally brittle, so they offer no solution where any degree of flexibility or mechanical performance is required.

As a result of these findings, new systems have been introduced using new co-reactant chemistry, where TGIC has been replaced by a ß-hydroxyalkylamide. When this is used in conjunction with specially adapted polymers, no potentially dangerous volatile compounds are released.

Of course, when originally developed, the system's overall performance had to be confirmed (Fig. 6). Since then, the systems have been independently approved to the requirements of the key architectural finishing standards.

Interestingly, although the original driving force behind the development of TGIC-free systems was health and safety, coaters have found that the new chemistry can give greatly enhanced application characteristics. Excellent first-time transfer efficiency and penetration (because

	Acetic Acid Salt Spray SO 9227	Humidity DIN 50017KK	Pressure Cooker BS6496 1984
Chromium Standard System	10/10 (8,000 hr)	10/10 (8,000 hr)	10/10 (25 hr)
Non-chromium System 1			
Laboratory Sample	10/8 (8,000 hr)	10/10 (8,000 hr)	9/9 (25 hr)
Plant Sample	5/10 (8,000 hr)	10/10 (8,000 hr)	9/9 (25 hr)
System 2	0/0 (5,000 hr)	4/6 (5,000 hr)	—
System 3	4/7 (3,000 hr)	10/10 (8,000 hr)	10/10 (2 hr)

Rating based on ASTM D1654
First Figure: Result from scribe. Second Figure: Result on rest of panel
0 = Failure 10 = Excellent

Fig. 4—Results for standard chromium systems, compared with various non-chromium products.

of reduced Faraday cage effects) have been noted, as well as good tribo-electric charging qualities.

In Australia, for example, where TGIC-free products have almost completely replaced previous architectural products, coaters have found an increase in powder use of up to 20 percent. Development continues in this area, and other new cross-linkers are under evaluation.

Exterior Weatherability

The main purpose of an architectural finish is to create the image inspired by the architect's imagination ... and to maintain that image for as long as possible, without the coating's degrading.

Standard high-performance architectural powders, based on polyester polymers cured with triglycidylisocyanurate or the alternatives previously discussed, have outstanding toughness and weatherability attributes. Products are assessed against the European Standards, where performance is measured after 12 months' Florida exposure, and more than 26,000 tons are used worldwide, today.

As with any technology, there is always a drive to improve performance, and, in the case of architectural powders, this has focused on enhancing exterior weatherability and, specifically, gloss retention, color retention and chalking resistance. In more-severe environments, such as the Middle East, Far East, North America and Australasia, such alternative technologies as fluorocarbon-wet paints (PVDF) and anodizing are widely used. But powder is rapidly establishing a strong position, particularly with the advent of new, super-durable powders.

	Gardner Impact	Conical Mandrel	Erichsen	T-Bend Flexibility
Polyester/TGIC	7.5J	<3 mm	8 mm	1T
TGIC-free Chemistry	7.5J	<3 mm	8 mm	1T
Polyurethane "Caprolactam Blocked"	7.5J	<3 mm	8 mm	1T
Polyurethane "Internally Blocked"	5J	<3 mm	7 mm	2T

Fig. 5—Mechanical Performance Table.

Using the benchmark standard of the American Architectural Manufacturers' Association Standard AAMA605.2-92, the new powder systems are formulated to meet—after five years' exposure in Florida—the key requirements of:

Gloss Retention	Greater than 50%
Chalking	Rating 8 or higher
Color Change	Maximum ΔE of 5

Because the Florida test is, by definition, a long-term test, it has been necessary to use and understand all available accelerated weathering techniques. The use of the Fresnel Solar Reflecting Concentrator*, in particular, has proven extremely useful. The background to this technique has been published previously.[10] Perhaps more important, the predictions made are now being confirmed by the actual, real-time Florida data (Fig. 8).

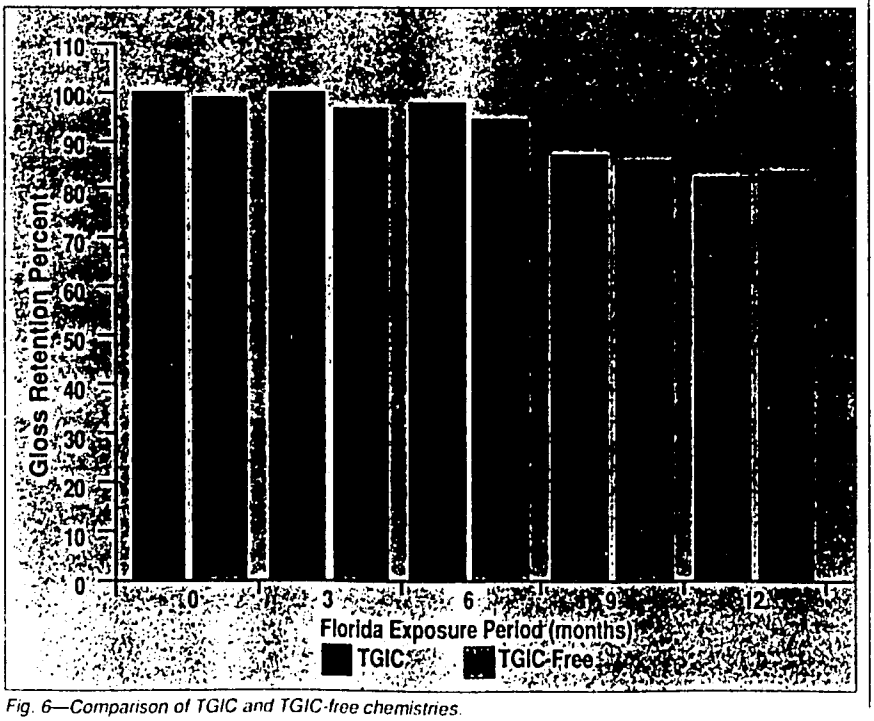

Fig. 6—Comparison of TGIC and TGIC-free chemistries.

Comparison with Alternative Technologies

The original AAMA 605 Standard was written around the performance of fluorocarbon or polyvinylidine difluoride (PVDF) wet paints. Together with inorganic anodizing, these finishes dominated the commercial finishing of aluminum, in the past.

In Europe, powder has replaced almost all wet painting, and at least 50 percent of anodizing. In other markets, such as the U.S. and the Far East, the use of standard architectural powders is growing rapidly, but it is now expected to accelerate even more, with the introduction of the new, super-durable powders.

In addition to the recognized benefits of powder—in terms of film toughness, ease of application and cost (Fig. 10)—the new powders can now offer greatly enhanced exterior performance as shown in Fig. 9.

Improved application characteristics and significant advances in exterior durability continue to make powder finishes more attractive.

When considered in conjunction with the overall architectural system advances in powder performance, combined with advances in pretreatment, fabrication methods and environmental acceptability, an exciting and prosperous future is indicated for architectural powders, worldwide. ❑

References

1. Australian Standard AS3715-1989: "Metal Finishing—Thermoset Powder Coatings for Architectural Application," Standards Australia, North Sydney 2060, Australia.
2. British Standard BS6496-1984: "Powder Organic Coatings for Application and Stoving to Aluminium Alloy Extrusions, Sheet and Preformed Sections for External Architectural Purposes, and

*EMMAQUA, DSET Laboratories, Inc., Phoenix, AZ.

62

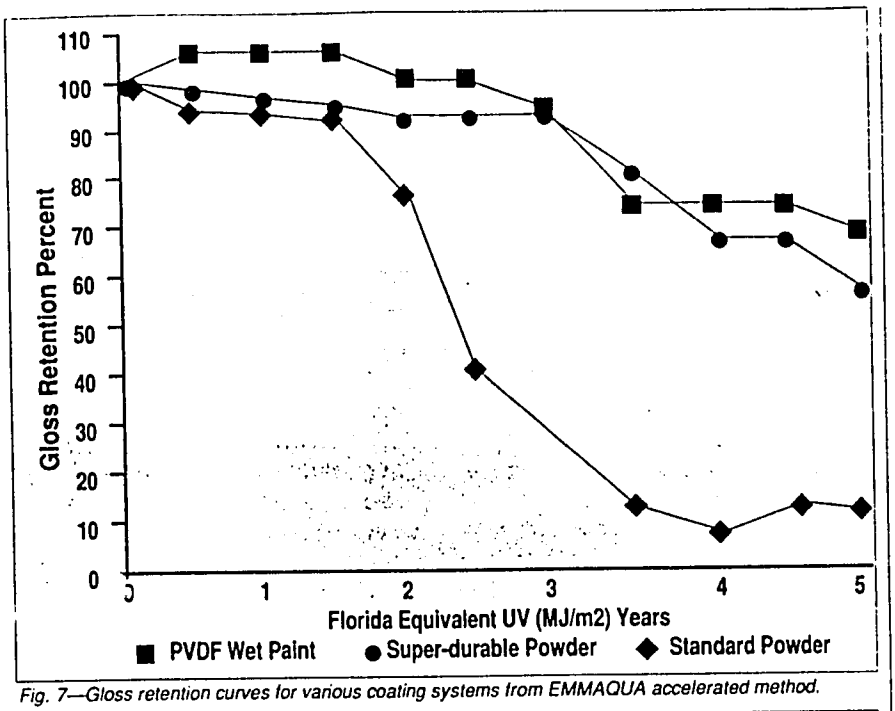

Fig. 7—Gloss retention curves for various coating systems from EMMAQUA accelerated method.

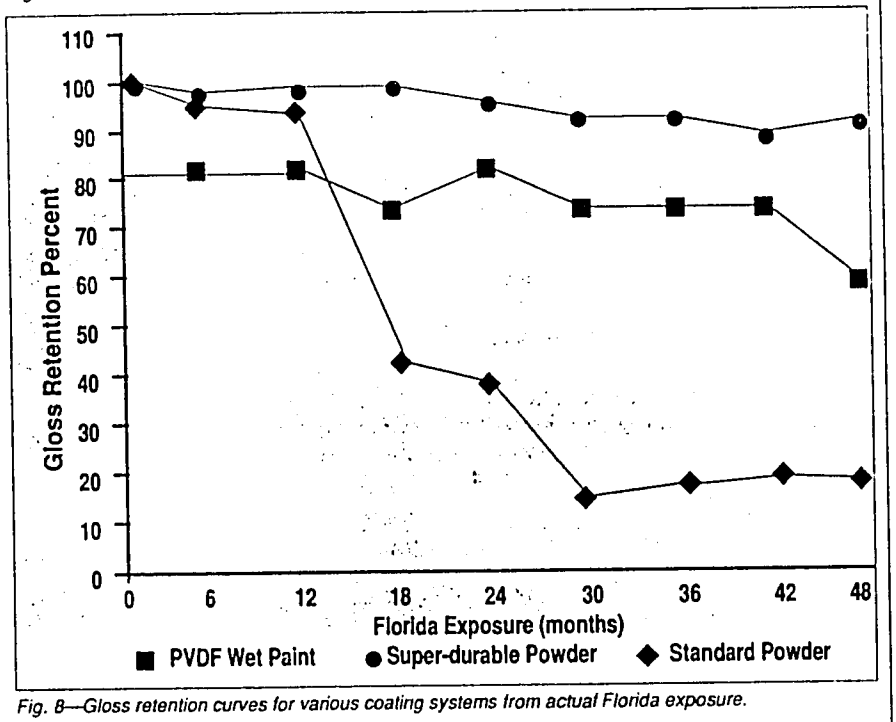

Fig. 8—Gloss retention curves for various coating systems from actual Florida exposure.

	Anodizing	Architectural Powders		
		Standard	Super-durable	PVDF (Spray)
Film Thickness	12–25	60–80	60–80	25–40
Number of Coats	N/A	1	1	2,3, or 4
Color Range	1	5	3	3
Choice of Gloss	1	5	4	2
Toughness	5	5	5	3
Weatherability	4	3	5	5
Health & Safety	4	5	5	2
Environmental Impact	2	4	4	1
Cost	5	5	4	1
5 = Excellent 4 = Very Good 3 = Good 2 = Fair 1 = Poor				

Fig. 9—Architectural finishes: Guide to comparative performance.

for the Finish on Aluminium Alloy Extrusions, Sheet and Preformed Sections Coated with Powder Organic Coatings," British Standards Institution, London, UK.

3. GSB RAL-RG 631 1994: "Quality and Test Regulations for Piecework Coating of Aluminium Building Components," GSB International, Schwäbisch Gmünd, Germany.
4. Qualicoat 1994: "Specifications for a Quality Label for Paint, Lacquer and Powder Coatings on Aluminium for Architectural Applications," Qualicoat, Zurich, Switzerland.
5. SABS-1993: "Organic Powder Coatings for External Architectural Aluminium," South African Bureau of Standards, Pretoria, South Africa.
6. AAMA, Des Plaines, IL, U.S.
7. D.B. Freeman, "Phosphating and Metal Pretreatment," Woodhead-Faulkner, Ltd (1986).
8. G.D. Steele, "Filiform Corrosion on Architectural Aluminum—A Review," *Corrosion Prevention and Control*, **40** (Dec. 1993).
9. PCI/USA Health and Safety Committee Draft, "Health and safety Information on Polyester Urethane Powder Coatings," Alexandria, VA.
10. M.F. Osmond, "Powder Finishing of Architectural Aluminum: The Development of High-durability Exterior Systems," *Proc. Powder Coating '92*, Cincinnati, OH, U.S. (1992).

About the Author

Matthew Osmond graduated in 1981 with a BS in chemical sciences from Leeds University (U.K.). Since then, he has worked in various divisions of Courtaulds Coatings (Holdings), Ltd., Felling, U.K. For six years, he was responsible for the development of the market for architectural powder coatings and is now marketing and commercial manager in the central support function of the Courtaulds Coatings powder business.

For Aluminum Window/Door Fabricator:

Powder Coating Is Finish of Choice

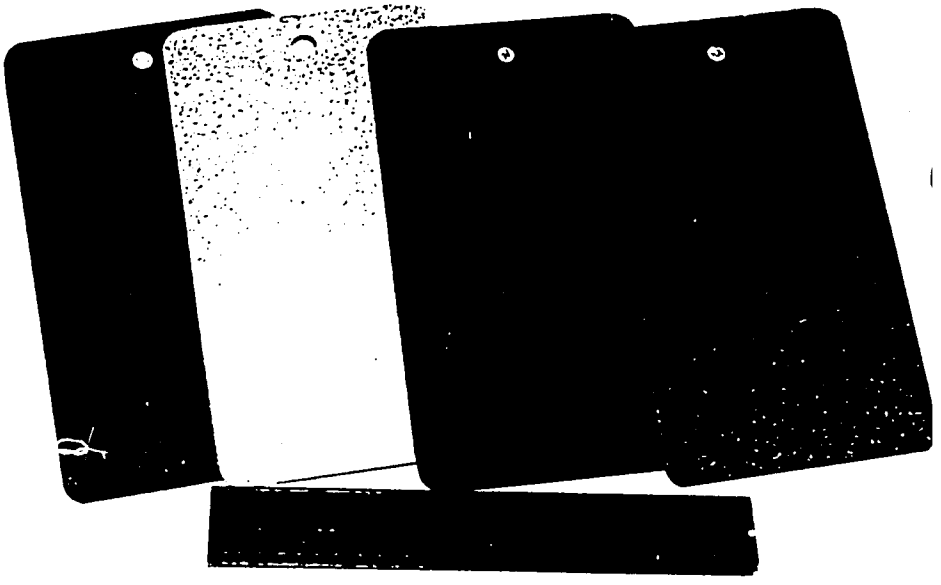

Color chips of MoCo's bronze, white, black and gold "veined," or textured, powder finishes.

Modern Window and Awning Co. ("MoCo") in Youngstown, Ohio, began fabricating metal storm/screen windows and doors in 1954, working most with mill-finished metal, and some anodized aluminum. The product line has evolved away from awnings, to include patio doors, and customer preference for colored frames, instead of "gray" metal, has lead to powder coatings—the only finish the company applies today, with sales running $4.5–5 million annually.

In an era when big, impersonal companies seem to be the order of the day, a recent series of shop visits by a *P&SF* editor came across a number of family-owned businesses—some with second- or third-generation management. MoCo is among these. William Guthrie, Sr., founded the company, and of his four daughters and two sons, only one of the girls has chosen to work outside the firm.

A Variety of Options

The company manufactures a variety of welded screen and storm windows and doors, along with security models. For colder climates, there are doors that have both moveable windows and screens, and other models have just screens and kick panels. Some frames are made from steel, while others are aluminum. Glass is used on doors that also feature moveable windows, and screen fabric choices include fiberglass or aluminum for non-security installations; high-tensile-strength, stainless steel wire mesh, for security use.

Steel or aluminum frame parts arrive at MoCo already extruded to specifications. Such variables as whether or not a moveable window will be incorporated into the door, size of kick panels, and screen fabric dictate those specifications.

The company welds the extrusions together, to make the many styles of doors and windows it offers. Instead of being lined with fiberglass or other insulating material, these units provide protection against temperature extremes through the use of polyurethane that is poured into a channel of the extruded piece. Once the polyurethane material "sets," the metal channel is "debridged," meaning that a part of it is actually ground away. This breaks the connection between metal parts, preventing thermal conductivity.

While some of these doors and windows are still made of "plain" galvanized steel, the majority of them are coated at MoCo, using polyurethane polyester, hybrid epoxy, or polyester powders, in brown, white, bronze, cream or black smooth finish; or gold and copper vein (textured).

Powder coating was chosen because it not only meets safety requirements and EPA regulations, but it also provides a dry coating process that produces a quality finish, more resistant to chipping and corrosion than most wet-paint methods. Baked enamel or other liquid paints, for instance, "sit" on the surface of a part, but powders actually enter the pores of the surface, adhering better and delivering a smoother finish.

First: Preparation

As with any finishing method, the quality and bond of powder coating's final result is dependent on the preparation of the material being coated. At MoCo, this critical operation is performed by a six-stage spray washer:

1. Heated, alkaline spray washer
2. Fresh, warm-water spray rinse
3. Heated, multi-metal-treatment chemical spray washer
4. Fresh, warm, clear-water spray rinse
5. Final clear water spray rinse, which can also be for non-chromate seal coat, when required
6. Iron phosphate rinse, for extra corrosion protection

The parts then go through a dry-off oven, situated between the washer and the coating booth, to ensure total dryness, inside and out.

In the coating booth, powder is delivered via sophisticated electrostatic spray guns, and is usually applied 2–3 mils thick (except the "veined" finishes, which are normally 8 mils). The line is negative-charged, electrically, and the powder carries a positive charge, creating the "attraction" and adhesion of powder to surface. The booth can handle parts up to 12 ft long, two ft wide and as high as 8 ft, and is equipped with two manual spray stations and reciprocators for mounting up to eight automatic guns. The guns emit a flat spray, which enables efficient coating of both flat and deep, recessed areas, and have manual touch-up capabilities for difficult surfaces.

The guns are fed by a hopper system that consists of three units—a 100-lb virgin feeder, a sieve and a 300-lb hopper. Fresh powder is pumped from the 100-lb canister to the sieve, which filters it to ensure a quality finish. The 300-lb hopper mixes reclaimed (used) and fresh powder, before sending it to the spray guns.

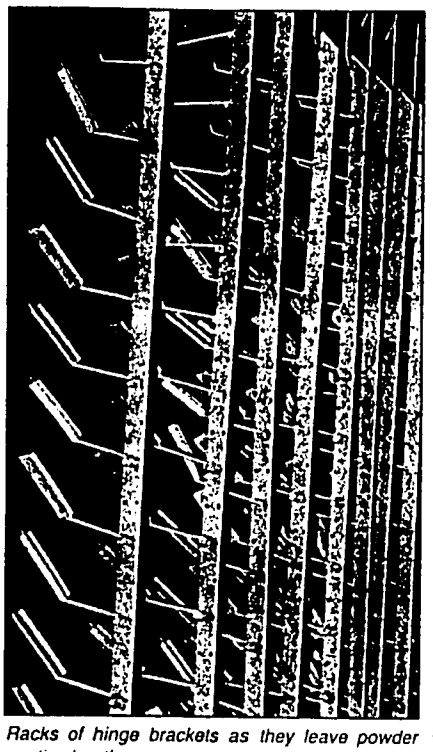

Racks of hinge brackets as they leave powder coating booth.

There is a small booth for hand-finishing or small jobs, but the main line can apply one color at a time, and color changes involve clean-up, line purges and other preparation. So, special colors are run first in the morning, then a "batch" color is run the rest of the day.

After coating, the items being finished travel through the heat-cure oven (400–410 °F), where the powder liquefies, resulting, effectively, in a product that has been sealed in a polyester "bag."

Other Pluses

Another advantage to powder coating is material recovery. With a wet process, any coating that oversprays or misses the item being finished adheres to the walls or floors of the spray area, dries there, and is lost. Powders, however, can be vacuumed or swept up and re-used—providing, of course, the appropriate measures are taken to prevent mixing colors, dirt or other ambient contamination. Clean-up is likewise simpler, requiring no solvents or other environmentally hazardous methods. Even racks for hanging smaller parts for coating are easy to clean—usually by burn-off, instead of chemical means.

A multi-color collector prevents powder from floating all over the plant. The unit has three main parts: A blower, main filter and final filter. The blower draws air from the powder booth, preventing the powder from exiting. This air travels through a large duct, into the main filter, which separates the powder from the air. Air is then pushed out of the final filter and back into the plant. The powder dust is collected in the main filter and emptied as needed, and disposed of as required.

Branching Out

In addition to powder-coating its own products, MoCo also finishes parts for automotive, appliance, office furniture and sporting goods applications. In fact, the company has coated handles for a popular small frying kettle through the line, and hockey fans probably see its handiwork on some of their favorite players' sticks. ❑

Is your waste treatment system missing something?

SERFILCO can help you stay in compliance!

SERFILCO recognizes your need for continuous trouble-free performance in your waste treatment system and, therefore, brings you products which have been designed and manufactured with state-of-the-art technology.

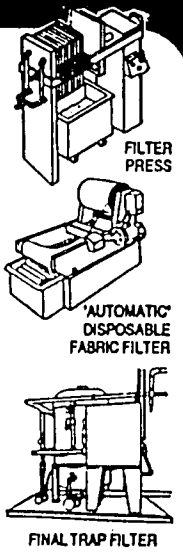

- GRAVITY & PRESSURE FILTERS
- FINAL TRAP FILTERS
- CORROSION-RESISTANT PUMPS
- OIL / WATER SEPARATORS
- ION EXCHANGE
- ELECTROLYTIC METAL RECOVERY
- pH INSTRUMENTATION
- HEATERS and much more!

Call or FAX us with your waste treat problems . . . our Sales Application Engineers can help.

SERFILCO, LTD.
1777 Shermer Road 708-559-1777
Northbrook, IL 60062-5360 U.S.A. 800-323-5431
Telex: 289557 SERFC UR FAX: 708-559-1995

F201

Free Details: Circle 107 on postpaid reader service card.

Invention & Innovation in thickness testing . . . the Kocour Touch

Series10

Reliability, innovation and basic American ingenuity have made Kocour Thickness Testers the choice of progressive platers for over 50 years. So, doesn't it make sense to rely on a Kocour Series 10 Handheld Thickness Tester. With 12 models to choose from there is one just right for your applicaiton. They are lightweight, durable and feature easy-to-read LCD displays. And, all are designed and manufactured with Kocour's total commitment to quality.

Basic models measure non-magnetic coatings on steel, or on non-conductive coatings on non-ferrous metals. Anything from plating to pain, or anodizing. galvanizing and powder coatings.

Enhanced models feature these additional capabilities:
- Printer Capability/RS232 Interface
- Multiple Calibration Memories and Batch Statistics
- Instantaneously Displays Full Measurement Statistics

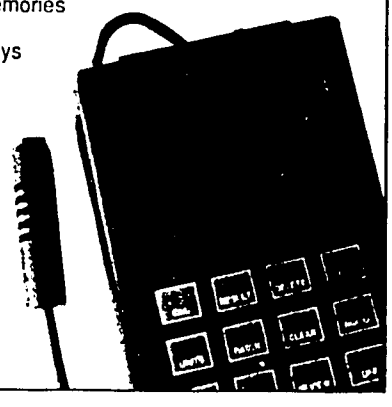

mfsa

KOCOUR
4800 South St. Louis Avenue
Chicago, Illinois 60632 U.S.A.
Telephone: (312) 848-1111
FAX: 312-847-3399

Free Details: Circle108 on postpaid reader service card.

65

APPENDIX B

Barrett CENTECH 1000

Reconditions Used Cutting Oils and Coolants

- **Removes sludge and solids.**
  Used fluids wrung from screw machine chips, collected from coolant sumps or other sources, can be reclaimed and re-used immediately after cleansing in the CENTECH 1000.

- **Improve machine performance with clarified liquids.**
  Reconditioned fluids give cutting tools longer life, provide a better finish, and lessen wear on pumps and seals.

- **Reduce contamination hazards.**
  Can also be used to recondition highly contaminated liquids taken during periodic sump clean-out. When liquids are cleaned, dermatitis hazards are reduced.

- **Save space and maintain a cleaner work area.**
  With the CENTECH 1000, there is no longer a need to store and wait for liquids to settle in messy pails and barrels. Liquid flow is handled automatically and returned to storage for re-use. So floors stay clean.

- **Shipped ready to install.**
  The complete, automatic system includes a Clarifuge, 2 tanks, 2 pumps, float valve and switch, flexible hoses and complete electrical control panel.

Barrett Centrifugals

67

The Barrett CENTECH 1000 Cleaning Process

Here's how the CENTECH 1000 works. Dirty liquid flows into the capture tank where larger metal chips collect in a basket. Sludge-bearing liquid is pumped to the Clarifuge where the sludge is removed by a centrifugal force of up to 2100 G's. Liquid flows back into the clarifier tank, then to the capture tank, and is constantly recirculated through the Clarifuge at rates of up to 500 gallons per hour. When the clarifier tank fills, the transfer unit will automatically pump out approximately 40 gallons of clean oil to storage.

This combination of gravity and centrifugal force provides an unusually clean oil. The conical bottom keeps the clarifier tank itself clean at all times.

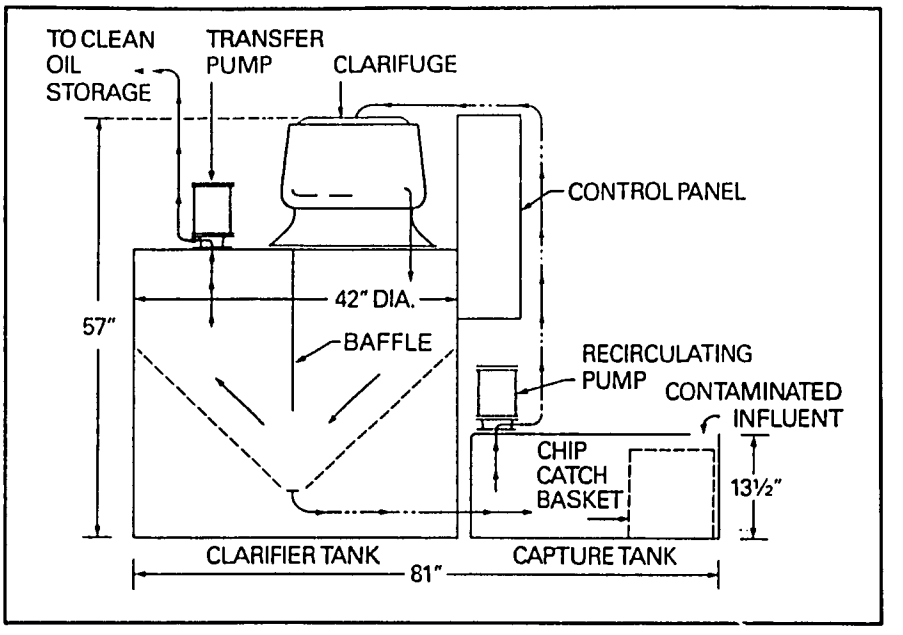

Construction

Capture Tank. Manufactured of 7-gauge steel with sloping sides. Includes overflow and drain outlets. Has removable cover for easy access to basket. Capacity 45 gallons.

Clarifier Tank. Manufactured of 7-gauge steel with overflow, drain outlets and access door. Capacity 125 gallons.

Electrical System. Includes all motors, switches, floats, disconnect, wiring and controls. Completely interwired in panel at the factory.

Clarifuge. Refer to Clarifuge Catalog for specifications.

Specifications

Total Tank Capacity
170 Gals. (641 Liters)

Total Tank Length
81 IN. (206 CM.)

Tank Width
42 IN. (107 CM.)

Tank Height (capture tank only)
13½ IN. (35 CM.)

Tank Height
(overall w/clarifuge)
57 IN. (146 CM.)

Net Weight
950 LBS. (431 KG.)

Shipping Weight (domestic)
1075 LBS. (488 KG.)

Shipping Weight (export)
1200 LBS. (544 KG.)

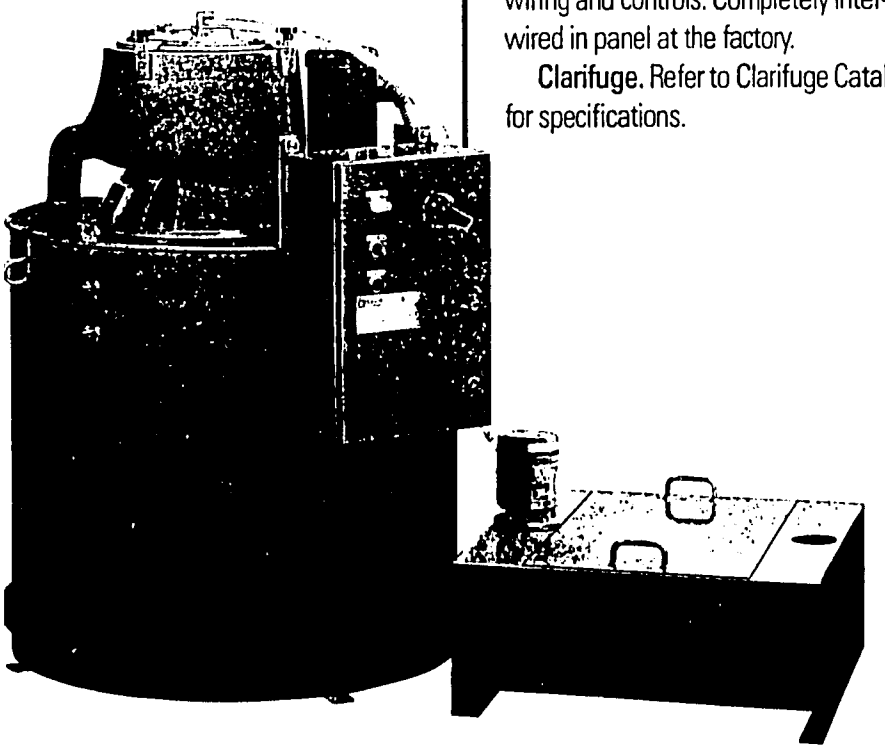

Barrett Centrifugals

Barrett Centrifugals Inc., P.O. Box 15059, Worcester, MA 01615-0059 U.S.A. (508) 755-4306 1-800-228-6442 FAX (508) 753-4805

Barrett Sludge Extractor

Recovers Oil and Coolant
Produces
Dry Sludge

Before

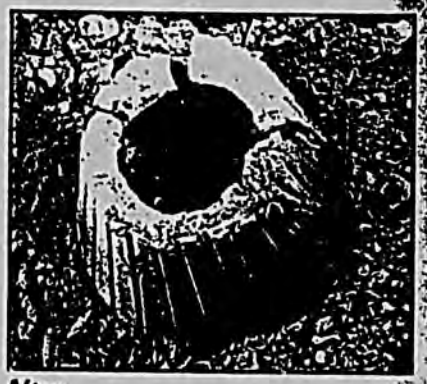

After

Barrett Centrifugals

Barrett Sludge Extractors Recover

Up To 85% Recovery

Barrett Sludge Extractors are specifically designed to remove liquid from sludge which collects in sumps and tanks or is removed by a drag-out conveyor. They are also effective in removing oil from scale and sludge in quench tanks.

Users find that such sludge contains from 40% to 85% by volume of recoverable oil or coolant. For example, by spinning 6 gallons of wet sludge, they are able to recover from 2½ to 5 gallons of oil or coolant for reuse. Generally, the spin time is about 15 minutes for coolants and 45 to 60 minutes for oil.

Before

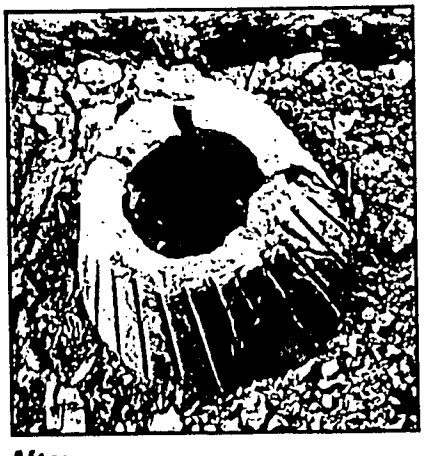

After

Reduce Disposal Costs and Problems

Contaminated sludges are becoming a favorite target for the EPA as well as state and local agencies concerned with water and soil pollution. Insurance inspectors also look upon oily sludge as a fire hazard.

Wet sludge is messy to handle and disposing of it is very expensive. Dry sludge is much less of a disposal problem and, in many cases, can be sent directly to landfill. Either way, disposal expense is minimized or eliminated.

Dry Sludge Can Be Valuable

In some cases, dry sludge can be sold back to the mill. This is especially true where tool steel and exotic metals are being ground. Several users have paid for their Barrett Sludge Extractors in less than 3 months through the sale of dry sludge alone.

Exclusive Features Provide Important Benefits.

Smooth, Vibrationless Operation
To compensate for normally unbalanced loads, the motor and entire rotating unit are mounted on a universal ball and socket which is sustained on the gyroscopic center of rotation by heavy steel springs. The direct-drive motor permits free gyroscopic action.

Pans
Barrett pans feature a solid steel shape for maximum strength with minimum weight. Rugged single-piece construction makes them leakproof. There are no perforations to clog, and the scientifically designed slope removes all recoverable oil quickly.

Use the pans as collection containers where the sludge is produced and eliminate shovelling, double-handling and spillage.

Dollies
The convenient pan dollies are built of rugged welded angle iron on heavy-duty steel casters to facilitate transporting sludge.

Convenient Pan Dumper Speeds Operation
For #401 and #1101 Models

Barrett Trunnion-Type Pan Dumper enables a quick, convenient operation with less manual work. The dumping arms attached to the side of the machine cradle the dumping lugs on the pan. This permits the pan to be inverted easily to empty the contents.

Automatic Cycle Assures Consistent Results
The wall-mounted control panel (shown on back page) includes all controls in a NEMA 12 enclosure.

After placing the pan with cover in the Sludge Extractor, the operator locks the lid and presses the "start" button. Spin time is governed by the adjustable timer which sequentially energizes the DC brake. When rotation has stopped the green signal light is illuminated enabling the operator to open the lid.

Lid Interlock For Operator Safety
These machines are equipped with a lid safety interlock designed to meet OSHA standards. This permits operation only when the lid is properly latched and also prevents the lid from being opened during rotation or during a power failure. The lid is also equipped with a camdown latch and leakproof seal.

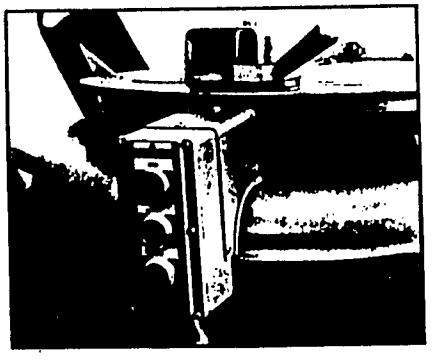

Oil and Coolant From Wet Sludge.

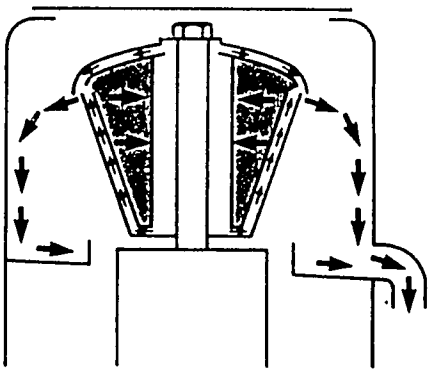

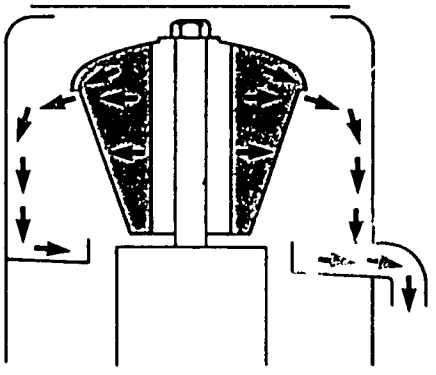

Models

Model SES
For use with most types of sludge.

When acted upon by centrifugal force, most sludges are compacted into a very dense mass. This compaction squeezes the liquid toward the center of the pan (the axis of rotation). To provide an escape path for this liquid, the interior of the pan and underside of the cover are equipped with radial spokes over which filter cloths are fitted (as shown to the right). This allows the liquid to travel around the compacted sludge and escape between the top of the pan and the underside of the pan cover.

Model SE
For coarser sludges (rough grinding swarf or scale from quench tanks).

The relatively large size particles present in coarse sludges allow liquid to pass through the mass. In this case, centrifugal force strips the liquid from the sludge moving it to the pan periphery where it exits. The pan cover is normally provided with a felt pad attached to the underside to filter the escaping liquid.

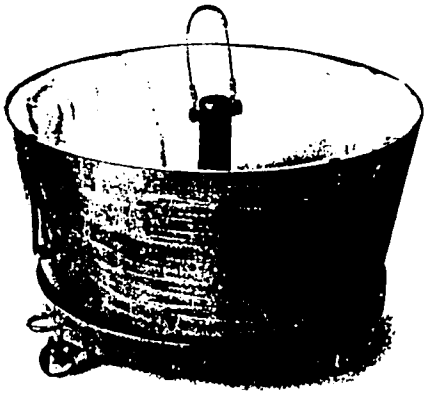

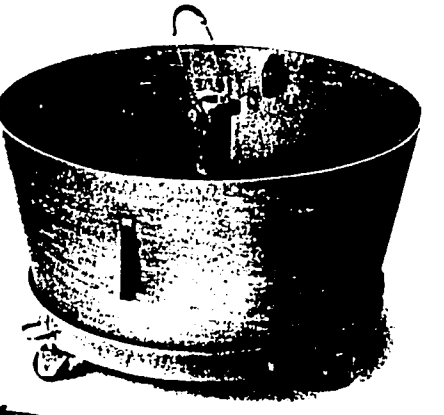

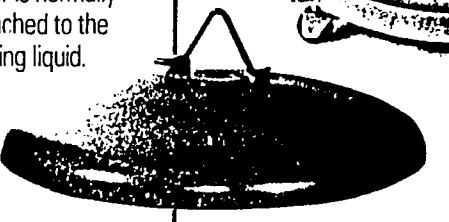

Specifications

Model SES & SE	151	401	1101
Pan Diameter, in.	18	23	30
Pan Depth, in.	8	15	14
Pan Capacity			
Cubic Feet	.8	2.1	4.5
Gallons	6	16	33
Maximum Allowable Load, lbs.	100	225	425
Running Speed (r.p.m.)	1200	1200	900
Horsepower of Motor (approx.)	2.5	6	10
Machine Height			
With top lid closed, in	34	45	45
With top lid open, in.	59	76.5	81.5
Diameter of Machine Base, in.	36	42	49
Net Weight, lbs.	985	1575	2450
Gross Weight			
Crated, lbs.	1160	1825	2775
Export Boxed, lbs.	1450	2200	3275

Particle Size Is Important

The larger the size of the particles that constitute the sludge, the easier it is to remove the liquid. Quench oil scale and rough grinding sludge are easily dried. On the other hand, sludge that is essentially powder – such as paint sludge – will blind the filter cloth or felt pad and cannot be dried successfully in the Sludge Extractor.

Our Guarantee To You

To determine which Sludge Extractor (SE or SES) is best for meeting your needs, we need to test a sample of your sludge at our factory laboratory.

We will run your sample and return the dry sludge and recovered fluid to you in separate containers along with a detailed analysis report.

We guarantee that these results can be duplicated with a Sludge Extractor in your plant.

Take advantage of this offer by requesting a Pretest Information Form and shipping label for your sample.

Other Barrett Centrifuges

Oil Extractors
For removing all recoverable oil and coolant from chips and turnings.
Clarifuges
For removing suspended fines and fine chips.
Liquifuges
For separation two miscible liquids.
CENTECH Systems
For clarifying cutting oil and coolant from chips.
For reconditioning oil and coolant taken from machine sumps.
For clarifying vibratory finishing and tumbling barrel waste water.
Washer-Dryers
For degreasing parts or chips without solvents.
Dryers
For high production parts drying.
Enamelers
For bulk coating irregularly shaped parts.
Galvanizers and Tinners
For removing excess molten zinc or tin from parts after hot dipping.

Control Panel Components

The control panel is a NEMA 12 enclosure for wall mounting and includes a flange-mounted disconnect switch. Controls include an adjustable spin timer, electrical brake, and complete electrical controls. Start-stop push buttons are located on the front of the machine along with a green signal light to indicate the completion of the cycle.

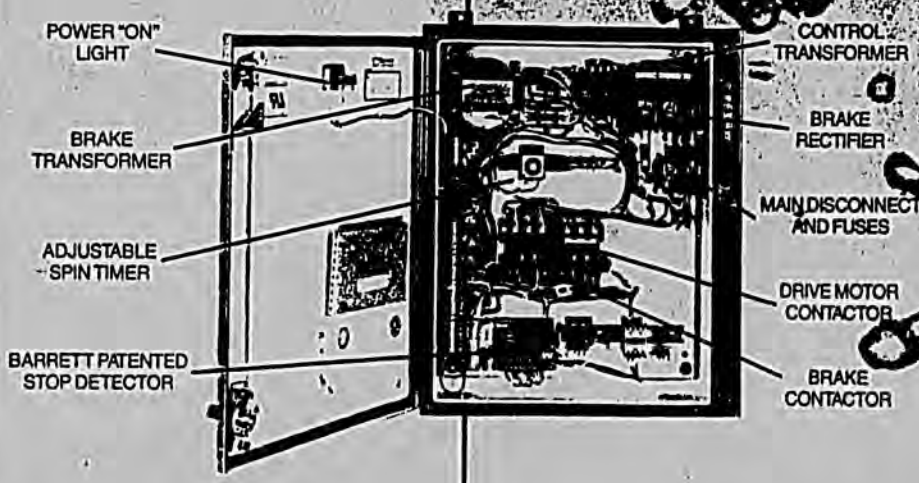

Barrett Centrifugals

Barrett Centrifugals Inc. Box 15059, Worcester, MA 01615-0059 U.S.A. (508) 756-4306 1-800-228-6442 FAX (508) 752-4805

Barrett Liquifuge

Separates Immiscible Liquids For Efficient Disposal and Recycling

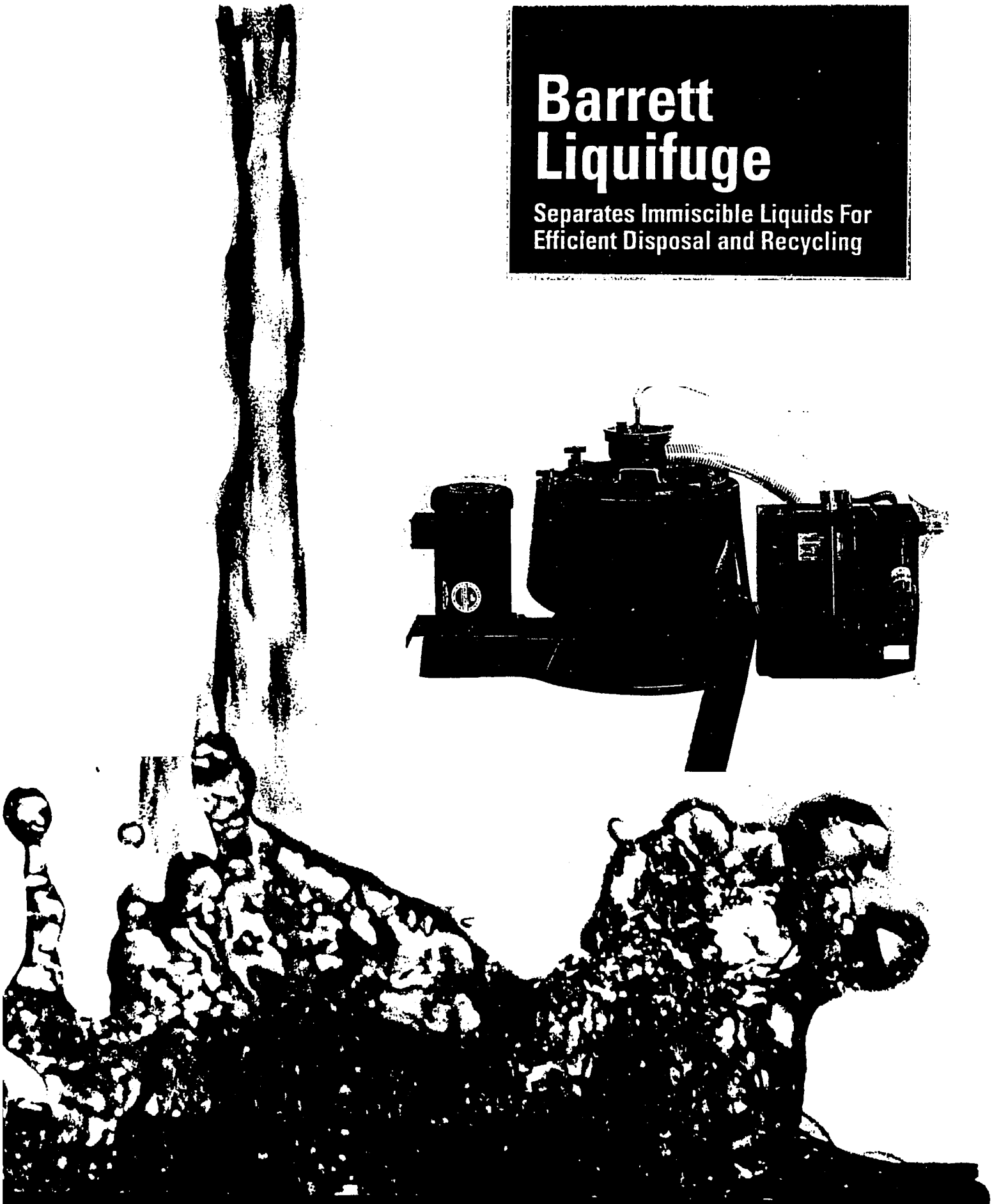

Barrett Centrifugals

Liquifuge Construction

- Drum (outer shell) and lid are reinforced fiberglass.
- Base is cast aluminum.
- Internal wetted components are #300 series stainless steel or cast iron.
- Spindle bearings are grease sealed and shielded, requiring no lubrication.
- Motors are totally enclosed. Fan-cooled (TEFC) type.

Other Barrett Centrifuges

Sludge Extractors
For drying sludge containing oil or coolant.
Oil Extractors
For removing all recoverable oil and coolant from chips and turnings.
Clarifuges
For removing suspended solid particles from liquids.
CENTECH Systems
For clarifying cutting oil and coolant spun from chips.
For reconditioning oil and coolant taken from machine sumps.
For clarifying vibratory finishing and tumbling barrel wastewater.
Washer-Dryers
For degreasing parts or chips without solvents.
Dryers
For high-production parts drying.
Galvanizers and Tinners
For removing excess molten zinc or tin from parts after hot dipping.

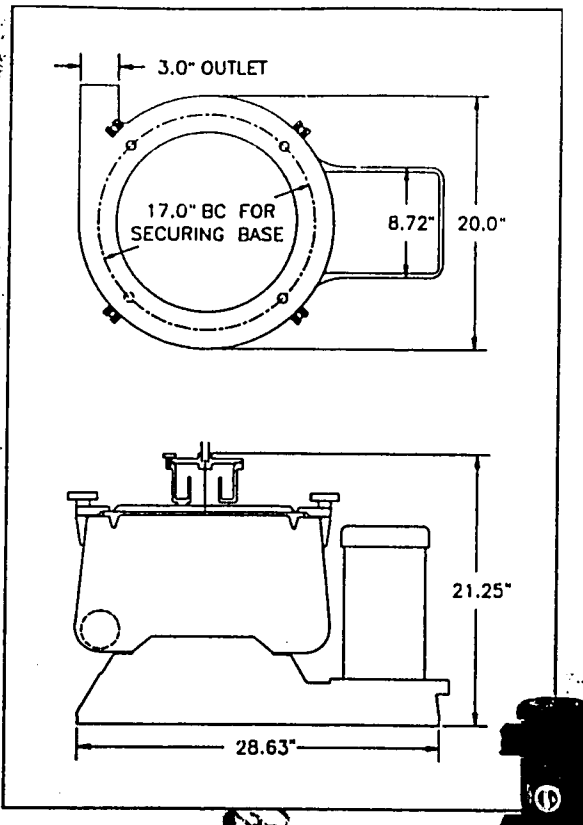

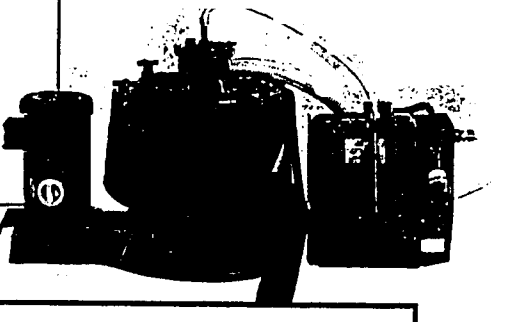

Specifications

Maximum Flow Rate	2 GPM (7.5 LPM)
Bowl Diameter	12 in. (30.5 cm)
Bowl Depth	6 in. (15.2 cm)
Solids Capacity	.75 gal. (2.85 L)
Bowl Speed	3450 RPM
H.P. of Motor*	3 H.P.
Net Weight	250 lbs. (114 kg)
Shipping Weight (domestic)	390 lbs. (177 kg)
Shipping Weight (export)	490lbs. (223 kg)

Standard motor is totally enclosed fan cooled. Other types are available upon request.

Barrett Centrifugals
(508) 755-4306 1-800-228-6442 FAX (508) 753-4805

Barrett Clarifuge

Removes Solid Particles From Liquids

Barrett Centrifugals

The Barrett Clarifuge Filt

The Barrett Clarifuge is a high speed centrifuge designed to remove suspended solids from a wide range of liquids. Presently in use at thousands of factories worldwide, the Clarifuge design has proven to be both reliable and efficient. Among the more common applications are:

Grinding Coolants

To remove sludge generated by the material being ground as well as wheel particles - improves finish and lengthens wheel life.

Cutting Oils

To clarify screw machine cutting oil that has been reclaimed from chips or taken from machine sumps.

Corrosive Liquids

To clarify corrosive solutions contaminated with solids. Offers a wide range of corrosive-resistant features as standard equipment.

Deep Hole Drilling Coolants

To maintain full flow of clean coolant through drill shank.

EDM (Electrical Discharge Machining) Fluids

To eliminate metal particles and maintain a controlled amount of carbon in dielectric fluid - permits higher cutting speeds and better finish. Reduces arcing.

Wire Drawing Lubricants

To recover metal fines that adversely affect finish. Keeps tank and pump free of sludge.

Quench Liquids

To minimize troublesome slag from quench tanks.

Tumbling Barrel/Vibratory Wastewater

To remove metal fines, abrasive media and other suspended solids.

Compare These Features

No Filter Elements
The Clarifuge design uses no filter cartridges, cloth or paper. Expense is limited to the low initial equipment cost.

Corrosive-Resistant
All parts that come in contact with liquids are constructed of corrosive-resistant fiberglass and stainless steel.

Non-Clogging
Constant flow and efficiency are maintained at all times.

Does Not Remove Oil Additives
The additives are not affected as they are with many filters.

Quick Cleaning
Removable bowl is locked in by a threaded nut so that it can be detached to remove the accumulated sludge quickly and easily. By using a second bowl, shutdown time is further reduced.

Removes All Types of Particles
This includes metal, abrasive stone and dirt - not just the ferrous material.

Capacity
Optimal clarity is attained at a flow rate of between 2 and 5 GPM. Maximum direct flow is 15 GPM.

Small Floor Space Requirements
Dimensions are shown on Page 4. Can be used as a portable unit.

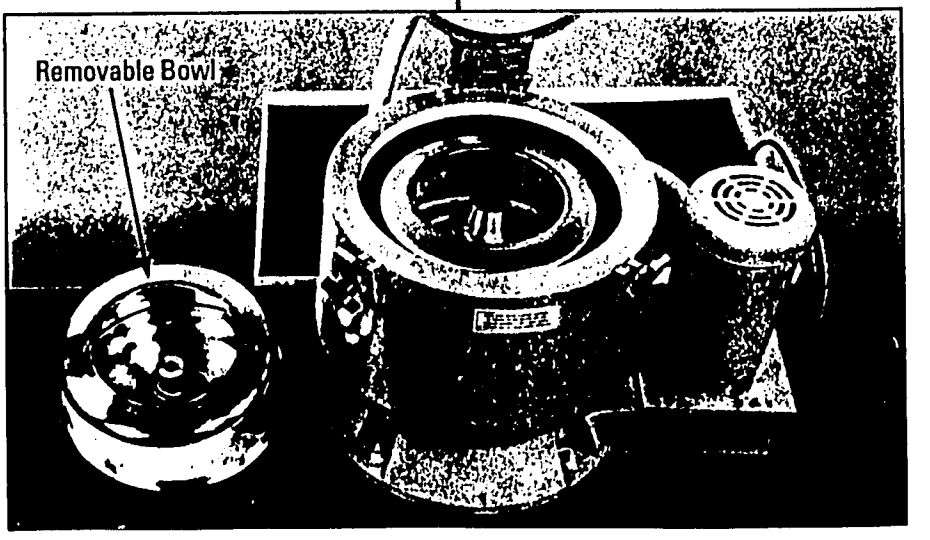

ers Liquids of All Types.

Here's How It Works

Contaminated liquid is pumped or gravity fed into the rotating bowl through the flexible inlet hose in the lid. While the liquid is in the bowl, it is subjected to a force in excess of 1000G's (gravities) at point A. This

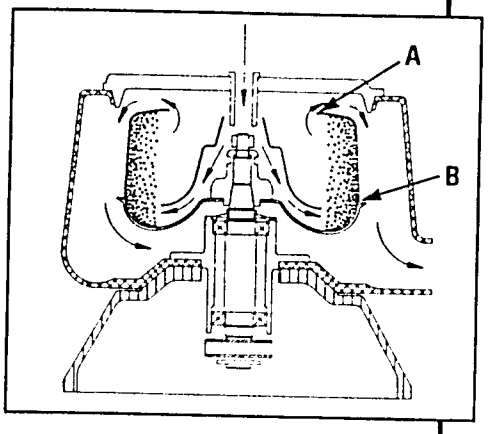

causes the heavy particles to be thrown out of suspension and collect within the bowl. At point B the sludge accumulates under an even higher centrifugal force which packs it tight. This reduces the volume occupied by the sludge before it is spun. The filtered liquid continuously flows over the rim at the top of the bowl and is discharged through the outlet.

For Clarifying High Temperature Liquids

Liquids normally used at high operating temperatures can also be cleaned in the Barrett Clarifuge. The standard machine construction will accommodate most liquids and corrosive solutions up to 175°F. For applications which exceed this range, the Clarifuge can be equipped with substitute materials and components allowing it to process liquids up to 300°F.

Prices for these applications will be furnished upon request. Send us complete information, including MSDS sheets, concerning the kinds of liquids to be clarified.

Standard Accessories

Flow Cone
A removable bowl insert to obtain a higher degree of clarity, especially where light-weight or extremely small particles are in suspension.

Vibration Dampeners
Set of four flexible mounts for bolting Clarifuge to a rigid surface. Absorbs vibration to prolong bearing life and quiet machine.

Spatula
Rugged plastic scoop designed to assist in removing collected sludge from bowl.

Switch
Manual motor starting switch with thermal overload and undervoltage protection mounted in NEMA 1 enclosure for wall mounting.

Inlet Hose
Heavy duty flexible polyvinyl hose (5 feet long) with inlet connection in lid.

Outlet Hose
Steel reinforced flexible thermoplastic rubber hose (3 feet long).

CENTECH Systems

Complete filtration systems including Clarifuge, tanks, pumps and controls. Engineered for specific uses such as reconditioning cutting oil/coolant recovered from chips and turnings or taken from machine sumps. Also, systems for vibratory finishing and tumbling wastewater. Ask for individual brochures.

Full Guarantee It Will Do Your Job

The Clarifuge has proven to be very successful on many types of liquids and corrosives. There are variations among applications such as the viscosity of the liquid, the density and size of the solid particles, the flow rate and the degree of clarification required. Generally, 2 to 5 micron clarity is achieved but there is no universal answer for every application.

For this reason we invite you to bring or send a sample of your contaminated liquid to our factory. It will be processed and promptly returned with a complete report. We guarantee these results can be duplicated in your production process.

Please call for details. We'll forward you a Pre-Test Information Form which outlines procedures.

Barrett
CENTECH
1000

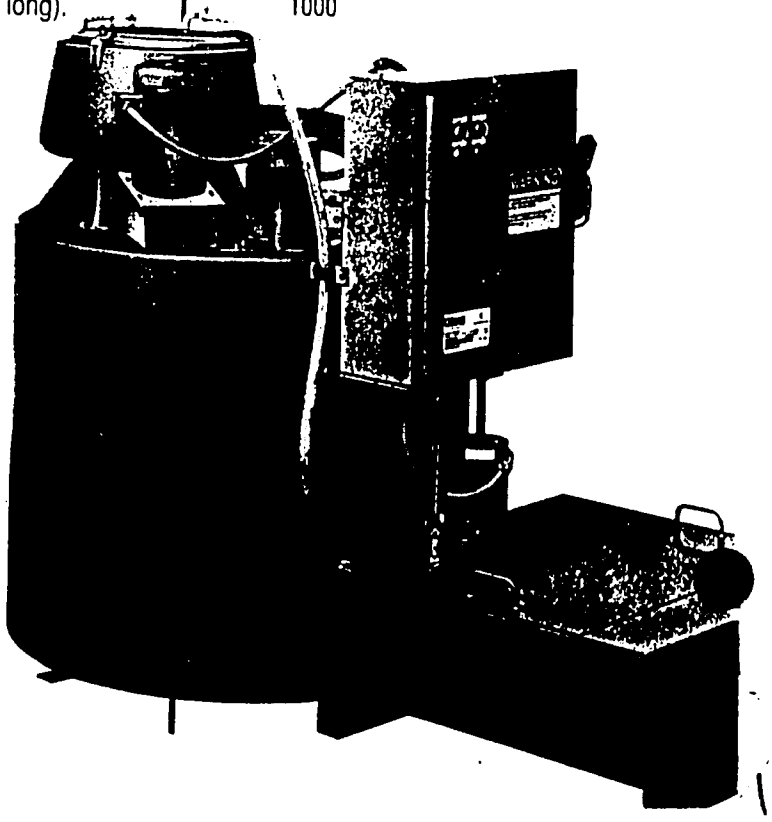

Construction

- Drum (outer shell) and hinged lid are reinforced fiberglass.
- Hinge and locking lid hardware are stainless steel.
- Base is cast aluminum (ductile iron available).
- Bowl is hydroformed mild steel or stainless steel.
- Drive belt is guarded by stainless steel plate. Tension adjustments can be made while machine remains mounted in place.
- Spindle bearings are grease sealed and shielded, requiring no lubrication. The spindle housing and spindle are stainless steel.

Model 236 bowl available in #316 Stainless Steel body.

Options

Spare Bowl
When downtime is critical. Allows for on-the-spot replacement of a filled bowl. Dirty bowl can be cleaned when convenient.

Pump
3/4 HP self-priming centrifugal pump with switch, suction hose and fittings, and flow control ball valve. For feeding contaminated liquid to Clarifuge.

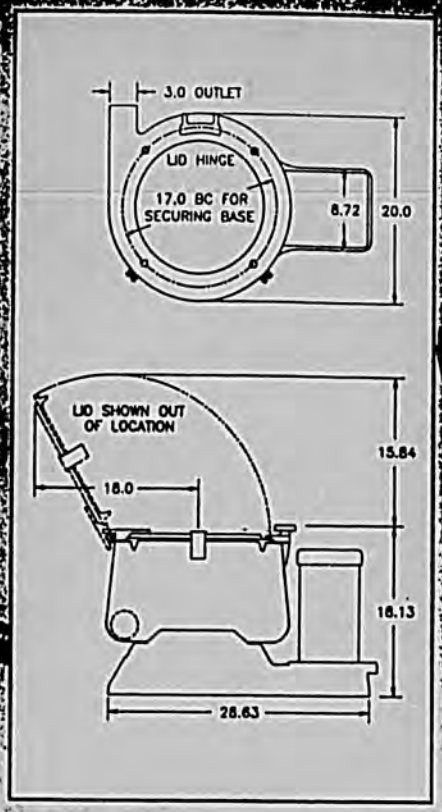

Specifications

	Model 225	Model 236
Bowl Diameter	12 in. (30.5 cm.)	13 in. (33.0 cm.)
Bowl Depth	5 in. (12.7 cm.)	6 in. (15.2 cm.)
Bowl Rim	8 1/4 in. (21 cm.)	8 1/4in. (21 cm.)
Sludge Capacity	1 gal. (3.8 L)	2 gals. (7.6 L)
Bowl Speed	3450 r.p.m.	3140 r.p.m.
H.P. of Motor*	2	3
Net Weight	150 lb. (68.2 kg.)	165 lb. (75.0 kg.)
Shipping Weight (domestic)	215 lb. (97.7 kg.)	230 lb. (104.5 kg.)
Shipping Weight (export)	265 lb. (120.5 kg.)	280 lb. (127.3 kg.)

* Standard motor is totally enclosed fan cooled. Other types are available upon request.

Other Barrett Centrifuges

Sludge Extractors
For drying sludge containing oil or coolant.

Oil Extractors
For removing all recoverable oil and coolant from chips and turnings.

Liquifuges
For separating two immiscible liquids.

CENTECH Systems
For clarifying cutting oil and coolant spun from chips.
For reconditioning oil and coolant taken from machine sumps.
For clarifying vibratory finishing and tumbling barrel wastewater.

Washer-Dryers
For degreasing parts or chips without solvents.

Dryers
For high production parts drying.

Galvanizers and Tinners
For removing excess molten zinc or tin from parts after hot dipping.

Barrett Centrifugals

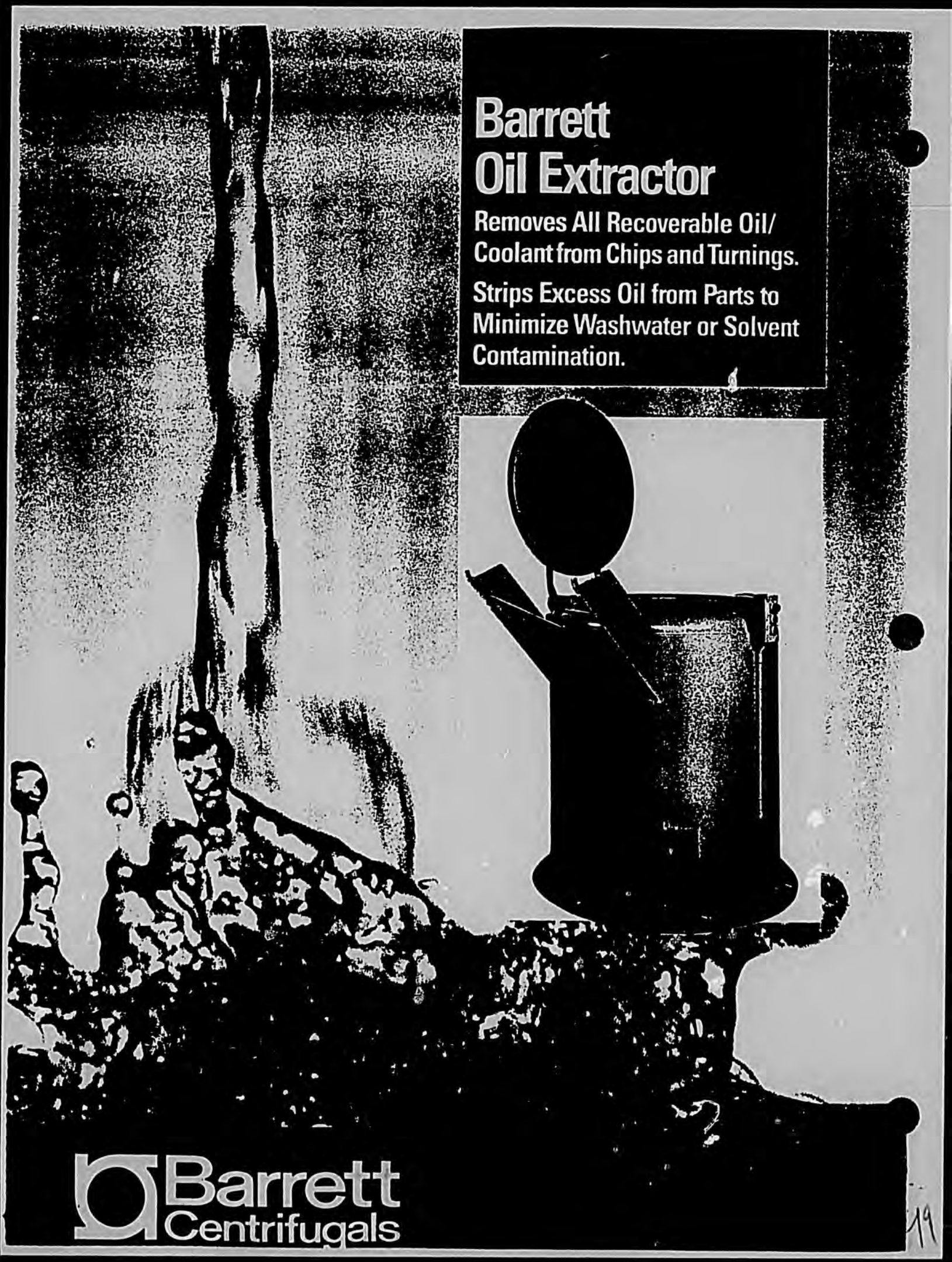
Barrett
Oil Extractor
Removes All Recoverable Oil/
Coolant from Chips and Turnings.
Strips Excess Oil from Parts to
Minimize Washwater or Solvent
Contamination.
Barrett
Centrifugals

Reclaim Costly Oil/Coolant For Reuse W

A Barrett Centrifugal Oil Extractor can reduce your present oil costs by as much as 90%. Removes and recovers your oil from chips, turnings, and parts quickly, thoroughly, and economically.

The most significant money saving method of saving oil. If you're presently gravity draining your oil, **Barrett will unconditionally guarantee you a reduction in cutting oil costs by at least 75%!**

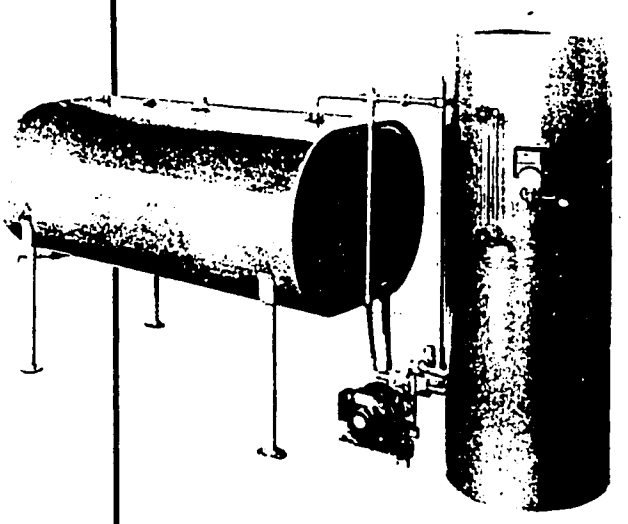

The Barrett Oil Extractor allows you to segregate different cutting oils. Steel, brass, stainless, and aluminum chips can be spun without intermixing and without downtime for cleaning. Even stringy chips, fine borings, and curly chips can be spun. And there's never a need for chip crushing or bar end removal.

It's not only profitable, it's ecologically sound. Minimal cutting oil waste assures maximum oil recovery. You can produce clean, dry chips and turnings that will bring high returns as scrap. And because excess oil gets thoroughly removed, finished parts may be easily separated from chips.

Are you machining with coolants? Why spend unnecessary money on transportation and disposal of expensive waste? The extractor offers you the same benefits (dry chips and reusable cutting fluid) as with cutting oil and makes ecological sense.

Features

Rapid Acceleration
Full speed is attained in seconds to remove most of the oil. Direct drive means there are no belts for you to replace or to slip.

High Speed
Centrifugal force of up to 470 times that of gravity is developed to remove all of the recoverable oil in less than 2 minutes.

DC Electrical Brake
The motor is designed for braking by DC current. Maintenance from wear inherent with mechanical brakes is eliminated.

Gryoscopic Balancing
Provides smooth, vibrationless operation. To compensate for unbalanced loads, the motor and rotating unit are mounted on a universal ball and socket that is sustained on the gyroscopic center of rotation by heavy steel springs. The direct drive motor permits free gyroscopic action.

Complete System

Each piece works together to benefit the whole system. The complete system includes:

Oil Extractor
Oil surface tension and adhesion throughout the entire load is overcome by forces produced by fast acceleration combined with high running speed.

Centech 1000
A completely automatic system that pumps the contaminated recovered oil into the Barrett Clarifuge. Employing a centrifugal force of up to 2100 G's, the Clarifuge thoroughly removes any suspended sludge. Oil flows into the clarifying tank and is constantly recirculated through the Clarifuge to ensure maximum clarity. When the clarifying tank is filled, the transfer pump automatically discharges the clean oil.

Storage Tank
For storage of clean oil. Available in 275 and 500 gallon sizes. Both size tanks have a drain valve and sight gauge to indicate amount of stored oil.

Pressure System
This system draws oil, as required, from the storage tank and puts it under a maintained pressure into its 120 gallon tank. Oil may then be transported by pressure through supply lines to the machines where it will be drawn from spigots. The pressure system provides a distribution of 200 gallons per hour.

hile You Gain Clean, Dry, Salable Scrap.

Advanced Features

Barrett's newest line of Centrifuges has several new built-in features.

Adjustable timer
For regulating spin time. Saves energy and manpower. Operator is freed during the cycle and consistent results are insured. The timer activates the D.C. brake to stop the processed load.

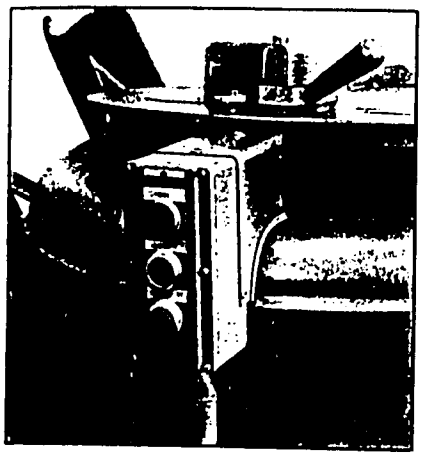

A stop switch
Enables run to be stopped, as desired, before completion.

A patented interlocking system
Designed to meet OSHA standards. Prevents machine from operating unless machine is properly latched. Lid cannot be opened during rotation or power failure. And lid contains leakproof seal so no messy seepage can occur.

Start and stop push buttons and a green light
Indicates when processing is completed and the lid can be opened. Includes complete control panel with door mounted disconnect switch for wall mounting.

For Efficiency and Ease of Chip Handling

Pan Dumper
A more convenient operation that provides faster dumping and less manual work. Enables pans of larger models to be lifted and dumped with ease. Standard dumping height clearance is 35" above floor.

Barrett Chip Pans and Dollies
Eliminate double handling, shoveling, and oil spillage during chip movement from the screw machine to the Extractor. All Chip Pans are of solid steel construction, leakproof, and have no perforations to clog up. Dollies are rugged welded angle iron construction on heavy duty casters.

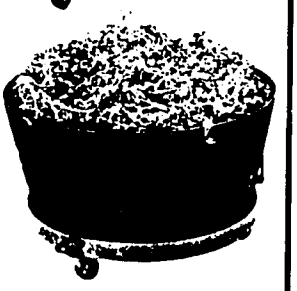

Overall height of pan on dolly
402-E — 18½ inches
1100-E — 17½ inches

Other Barrett Centrifuges

Sludge Extractors
For drying sludge containing oil or coolant.

Clarifuges
For removing suspended fines from liquids.

Liquifuges
For separating two immiscible liquids.

Washer-Dryers
For degreasing parts or chips without solvent.

Dryers
For drying parts.

Enamelers
For bulk coating irregularly shaped parts.

Galvanizers and Tinners
For removing excess molten zinc or tin from parts after hot dipping.

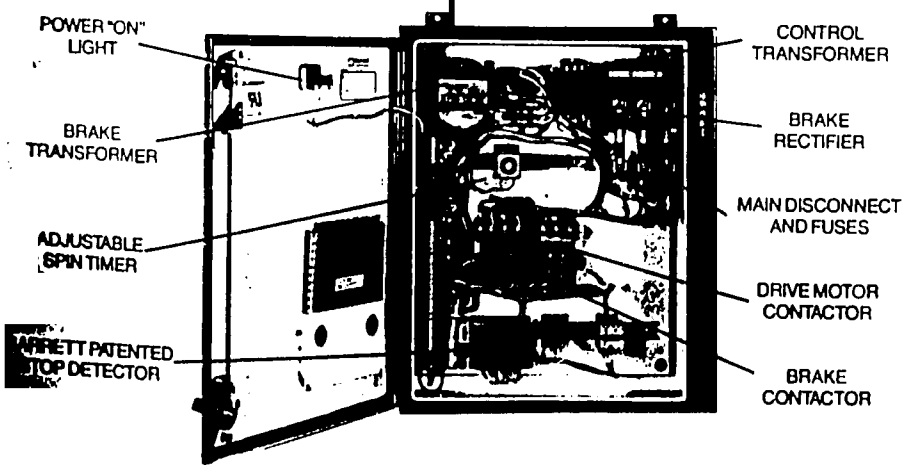

Models

Spindle Post Type

For extremely fine chips. To prevent chips from being carried out with the oil, a closer fit between the top of the pan and the pan cover is required. The motor shaft fits within the pan center post to position the pan and the cover. Hardened threads at the top of the shaft allow the cover to be secured by a top nut using a furnished two-handed wrench. Available in three sizes. See specifications chart.

Machine Interior

Carrier Type

For maximum speed in loading and unloading. Quick operating safety locks within the pan cover engage the lugs of the carrier (pan holder). For maximum safety, the cover must be fully locked before the outer lid can be closed and the machine operated. Lugs hold the cover securely around the entire periphery. Available in three sizes. See specifications chart.

Machine Interior

Spindle Post			Specifications	Carrier		
151-E	401-E	1101-E		152-E	402-E	1100-E
18 in. (45 cm.)	23 in. (58 cm.)	30 in. (76 cm.)	Pan Diameter	18 in. (45 cm.)	23 in. (58 cm.)	30 in. (76 cm.)
8 in. (20 cm.)	15 in. (38 cm.)	14 in. (35 cm.)	Pan Depth	8 in. (20 cm.)	15 in. (38 cm.)	14 in. (35 cm.)
.8 cu.ft. (.02 cu.m.)	2.1 cu.ft. (.06 cu.m.)	4.5 cu.ft. (.12 cu.m.)	Pan Capacity	.8 cu.ft. (.02 cu.m.)	2.1 cu.ft. (.06 cu.m.)	4.5 cu.ft. (.12 cu.m.)
20	20	15	Max Loads Per Hour	20	20	15
16 cu.ft. (.45 cu.m.)	42 cu.ft. (1.17 cu.m.)	68 cu.ft. (1.90 cu.m.)	Hourly Production Rate Cubic Feet	16 cu.ft. (.45 cu.m.)	42 cu.ft. (1.17 cu.m.)	68 cu.ft. (1.90 cu.m.)
2	5.7	9	Hourly Production Rate Barrels of Chips (55 gal.)	2	5.7	9
100 lbs. (45 kg.)	225 lbs. (102 kg.)	425 lbs. (193 kg.)	Maximum Allowable Load	100 lbs. (45 kg.)	225 lbs. (102 kg.)	425 lbs. (193 kg.)
1200 r.p.m.	1200 r.p.m.	900 r.p.m.	Running Speed	1200 r.p.m.	1200 r.p.m.	900 r.p.m.
2½	6	10	Horsepower of Motor (Approx.)	2½	6	10
34 in. (86 cm.)	45 in. (114 cm.)	48 in. (121 cm.)	Machine Height With Top Lid Closed	34 in. (86 cm.)	45 in. (114 cm.)	45 in. (114 cm.)
59 in. (150 cm.)	76½ in. (194 cm.)	84½ in. (214 cm.)	Machine Height With Top Lid Open	59 in. (150 cm.)	76½ in. (194 cm.)	81½ in. (207 cm.)
36 in. (91 cm.)	42 in (107 cm.)	49 in. (124 cm.)	Diameter of Machine Base	36 in. (91 cm.)	42 in. (107 cm.)	49 in. (124 cm.)
1085 lbs (482 kg.)	1690 lbs (718 kg.)	2680 lbs. (1236 kg.)	Net Weight	1110 lbs. (505 kg.)	1715 lbs. (766 kg.)	2680 lbs. (1218 kg.)
1200 lbs (536 kg.)	1715 lbs (780 kg.)	2860 lbs. (1318 kg.)	Gross Weight (Domestic Crated)	1230 lbs. (559 kg.)	1850 lbs. (827 kg.)	2860 lbs. (1300 kg.)
1430 lbs (650 kg.)	2200 lbs (909 kg.)	3340 lbs (1518 kg.)	Gross Weight (Export Boxed)	1480 lbs. (672 kg.)	2300 lbs. (1011 kg.)	3340 lbs. (1500 kg.)

*Chips weighing 50 lbs per cu ft — average for uncrushed steel chips

Barrett Centrifugals

5V

OBERLIN AUTOMATIC PRESSURE FILTERS

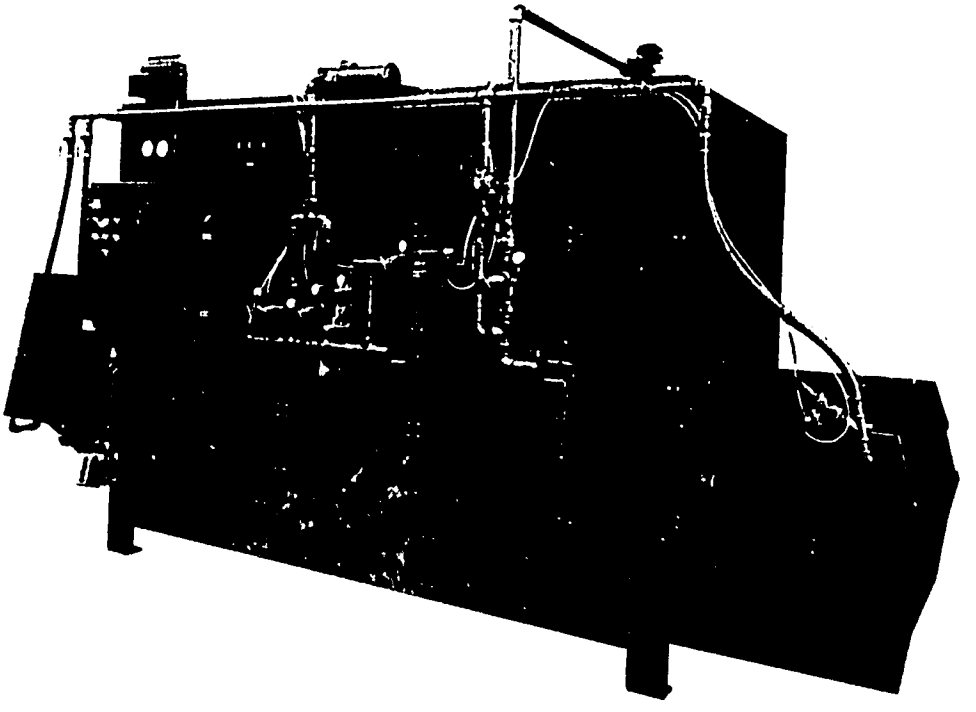

THE ENERGY SAVING, ECONOMICAL METHOD FOR SEPARATING SOLIDS FROM LIQUIDS

IN A WIDE VARIETY OF WASTE WATER
DEWATERING AND MACHINING
COOLANT FILTRATION APPLICATIONS

Oberlin Filter Company
DIV. OF PRODUCTION SERVICE CO., INC.
1931 MAC ARTHUR ROAD
WAUKESHA, WISCONSIN 53188
(414) 547-4900

HOW THE OBERLIN PRESSURE FILTER WORKS

FILTERING CYCLE

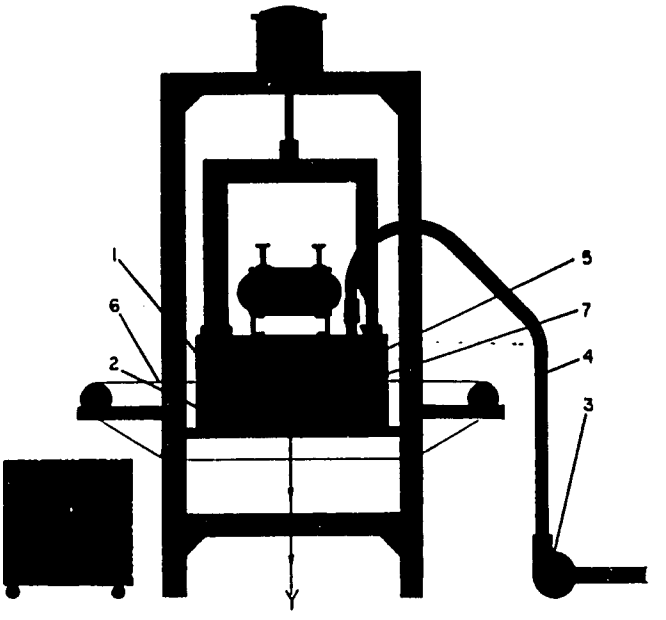

1.) FILTERING CYCLE

The filter cycle is started by lowering the upper shell (1) on top of the lower shell (2). The filter pump (3) is then automatically turned on and the dirty liquid (4) is pumped into the filter. The suspended solids in the dirty liquid are filtered out and form a filter cake (5) on top of the filter media (6) which lies in between the upper and lower shells. The clean liquid flows out of the outlet (7) in the lower shell. As the filter cake increases in thickness, the pressure in the top shell (1) also increases. When this pressure reaches the set point on the filter's control pressure switch, usually 25-30 psig, the pump shuts off and the filter cake drying cycle starts automatically.

2.) FILTER CAKE DRYING CYCLE

During the filter cake drying cycle the upper shell (1) is pressurized with plant air (8). This air pressure forces any remaining dirty liquid (4) in the top shell down through the filter cake (5) and out the filter's outlet (7) as a clean liquid. After all the dirty liquid has been forced out of the upper shell, the plant air is automatically turned off, the top shell is depressurized, and the filter cake discharge cycle starts.

3.) FILTER CAKE DISCHARGE

After depressurization, the top shell (1) is raised up by means of an air cylinder (9) and the conveyor belt (10) is turned on discharging the dry filter cake (5) into a tote box (11) at one end of the filter. If a re-cleanable nylon belt filter media is used, it is cleaned off by means of an air and/or water spray (12) at the discharge end of the filter. After the filter cake is discharged, the top shell is lowered back into place and the filtering cycle is started again automatically.

FILTER CAKE DRYING CYCLE

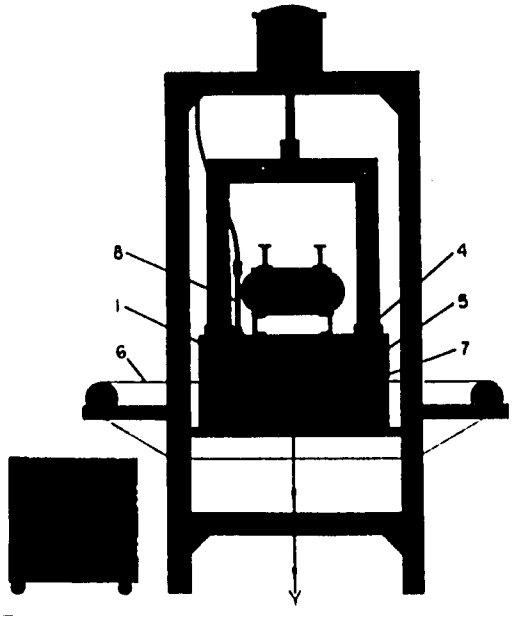

FILTER CAKE DISCHARGE

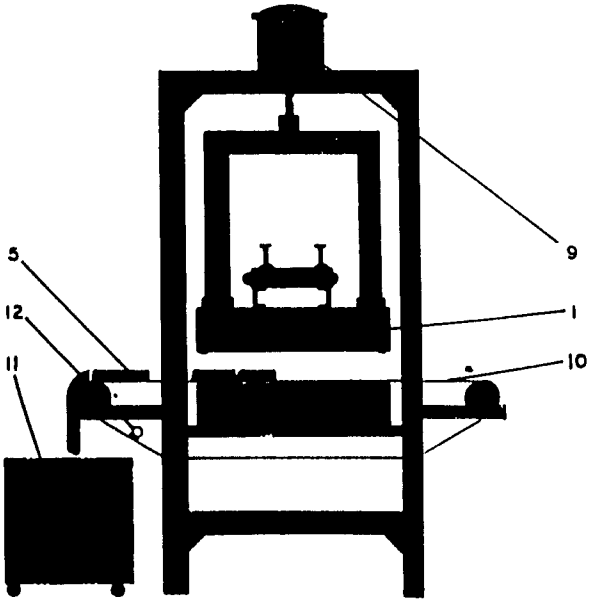

TYPICAL APPLICATIONS

DEWATERING OF DIATOMACEOUS EARTH AT A MAJOR BEER BREWERY. Filter cake is 1-1/2 inches thick and 50% solids by weight. The filter, a Model HC-12, uses a recleanable nylon belt.

DEWATERING OF SLUDGE FROM A WET SCRUBBER USED TO CLEAN GAS EMISSIONS FROM A CUPOLA AT A CAST IRON FOUNDRY. The filter, a Model HC-24, removes 6,000 lbs. (dry wt.) of suspended solids each day and runs 24 hrs./day. Filter uses a recleanable nylon belt.

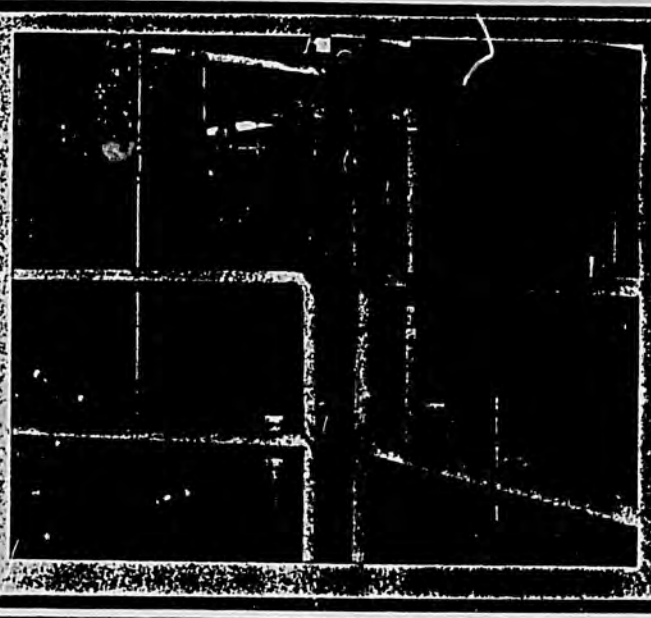

FILTRATION OF MINERAL OIL COOLANT USED ON FOUR GEAR GRINDERS. The filter, a Model HB, supplies 70 gpm of ultra-clean oil to the grinders. Note the thick, dry filter cake. This cake acts as an additional filter media resulting in oil so clean that it never has to be replaced. Filter uses a disposable filter media.

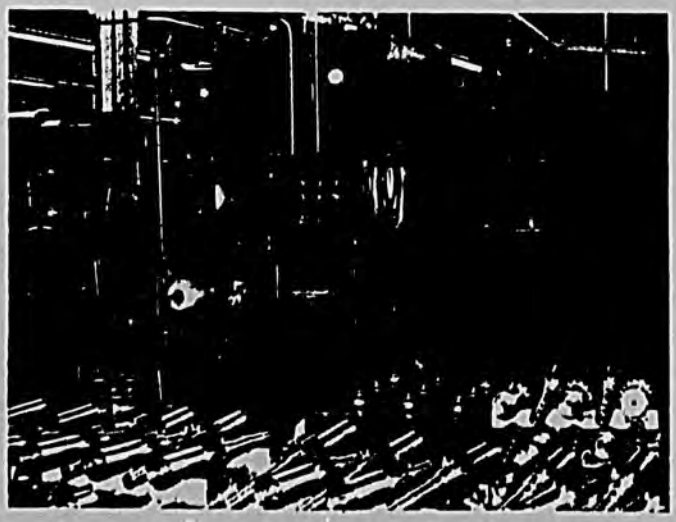

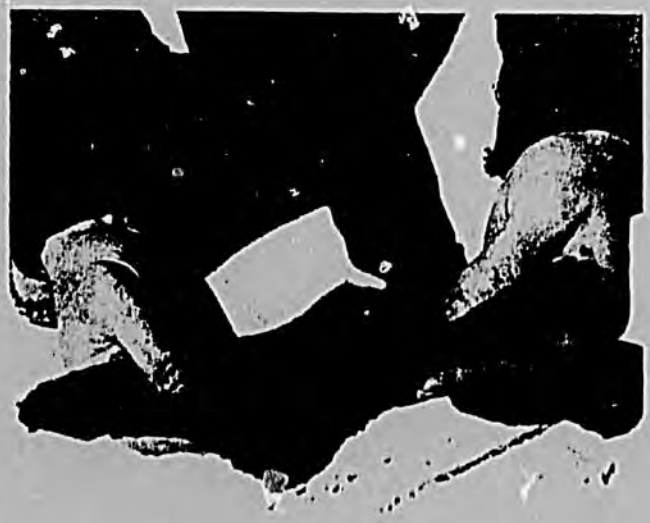

INDUSTRIAL FILTRATION

- Water soluble coolants
- Synthetic oil coolants
- Mineral oil coolants
- Hydraulic oils
- Cutting oils
- Solvent recovery
- Quenching oils
- Parts Washers

WASTE WATER DEWATERING

- Breweries
- Foundries
- Sugar refineries
- Food processing
- Waste ink removal
- Metal plating
- Grain milling
- Acid disposal

LOOK AT THESE OUTSTANDING FEATURES

- Completely automatic
- No continuous monitoring
- Low operating and maintenance cost
- Compact size minimizes floor space
- Uses either recleanable nylon belt or disposable filter media interchangeably
- Thick filter cakes, 40-50% solids by wt., making for easy, low cost disposal
- One year full warranty

DESIGN ASSISTANCE

Our engineers are available to design an efficient, low cost, turn-key filtration or dewatering system:

- Free laboratory testing of your samples.
- Model HA rental test filters available for on site testing.
- Provide all necessary engineering and equipment for turnkey system.

AVAILABLE SIZES OF OBERLIN PRESSURE FILTERS

MODEL	FILTER AREA	LENGTH	WIDTH	HEIGHT	SHIPPING WEIGHT
HA	2.44 sq. ft.	5'	3-1/2'	8'	[illegible] lbs.
HB	7 sq. ft.	6'	5'	8'	[illegible] lbs.
HC-12	12 sq. ft.	6'	6-1/2'	8'	[illegible] lbs.
HC-24	24 sq. ft.	12'	7'	8'	[illegible] lbs.
HC-36	36 sq. ft.	16'	7'	8'	[illegible] lbs.

REPRESENTED BY:

H. A. WILSON COMPANY
Manufacturers' Representatives
P.O. Box 252 Lexington, MA 02173

OBERLIN AUTOMATIC PRESSURE FILTER AN-11

FILTRATION OF MINERAL OIL COOLANT USED ON GEAR GRINDING

APPLICATION

Model HB (7 sq. ft. of filtering area) filters mineral oil coolant used on gear grinders. This centralized filtration system provides 70 gpm of ultra-clean (better than 10u filtration) oil to four gear grinders. Note how the filter is mounted on top of the holding tank to minimize floor space requirements.

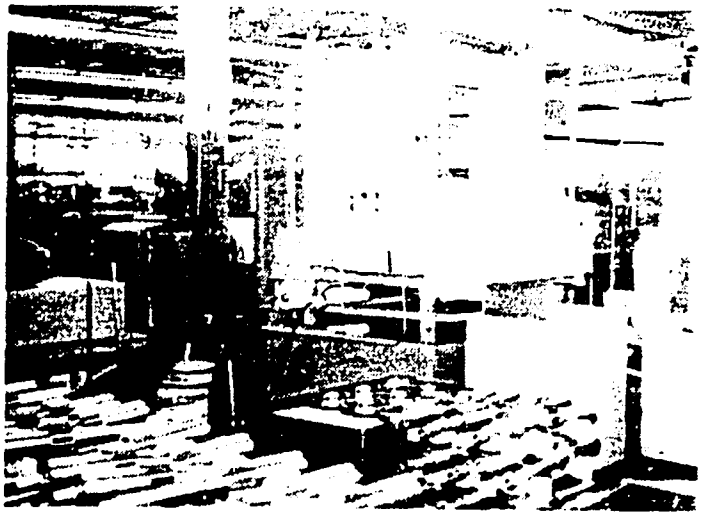

FILTERING CHARACTERISTICS

Flowrate - 70 gpm

Cycle time - 8 hours

Filter media - 0.6 oz per sq. yd., Reemay

Operating cost - 2¢ per hour

Filter cake - ½ inch thick

Note: that this thick filter cake acts as the ultra-fine filtering media and the resulting filtered oil is so clean that it never has to be replaced.

Production Service Co. Inc. provided complete turn-key filtration system including the Model HB filter, tank, pumps, and refrigeration unit.

REPRESENTED BY:

H. A. WILSON COMPANY
POST OFFICE BOX 252
LEXINGTON MA 02173
PHONE 617/861-8000

MANUFACTURED BY:

OBERLIN FILTER COMPANY
Division of Production Service Company, Inc.
404 PILOT COURT
WAUKESHA, WI 53188-5785

OBERLIN AUTOMATIC PRESSURE FILTER AN-12

FILTRATION OF WATER SOLUBLE COOLANT USED FOR CRANKSHAFT GRINDERS

APPLICATION

Model HB (7 sq. ft. of filtering area) filters all the water soluble coolant used for eight crankshaft grinders in this centralized coolant filtration system. The coolant is kept so clean that it never has to be replaced. Note: how the filter is mounted on top of the holding tank with its pumps to conserve floor space.

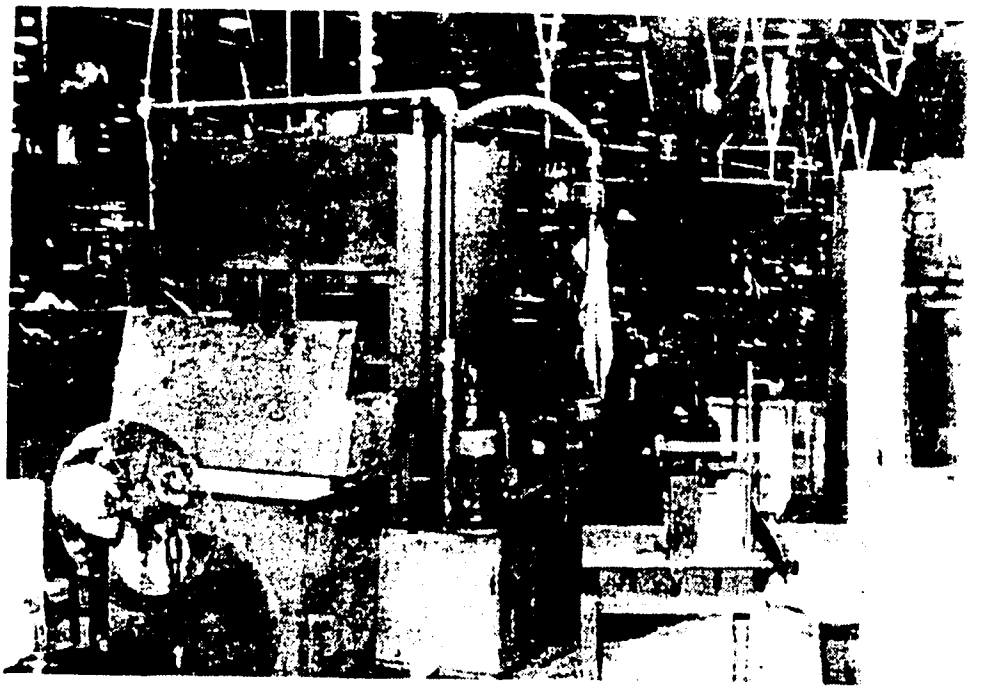

FILTERING CHARACTERISTICS

Flowrate - 90 gpm

Filter media - 0.8 oz. per sq. yd. rayon

Cake thickness - ½ inch

Note: Production Service Co., Inc. provided a complete turn-key system including Model HB filter, tank and pumps.

REPRESENTED BY:

H. A. WILSON COMPANY
POST OFFICE BOX 252
LEXINGTON MA 02173
PHONE 617/861-8000

MANUFACTURED BY:

OBERLIN FILTER COMPANY
Division of Production Service Company, Inc.
404 PILOT COURT

OBERLIN AUTOMATIC PRESSURE FILTER AN-19

FILTRATION OF LAPPING OIL

APPLICATION

A major manufacturer of hydraulic pump parts had an extremely difficult lapping oil filtration problem. The pump parts are made out of aluminum, cast iron, brass, or steel and are lapped with mineral seal oil (41SSU) and an aluminum oxide lapping compound. Fifty percent of the particles are in the 5-10u size. Production Service designed and built at 100% automatic turnkey filtration system (see Drwg. #2191-101A) using a Model HB filter, which uses diatomaceous earth (D.E.) precoat and body feed. Filtration system includes Model HB filter, 300 gal. D.E. precoat and bodyfeed tank, 900 gal. two compartment tank, 5 ton chiller for cooling oil and all controls for complete automatic operation.

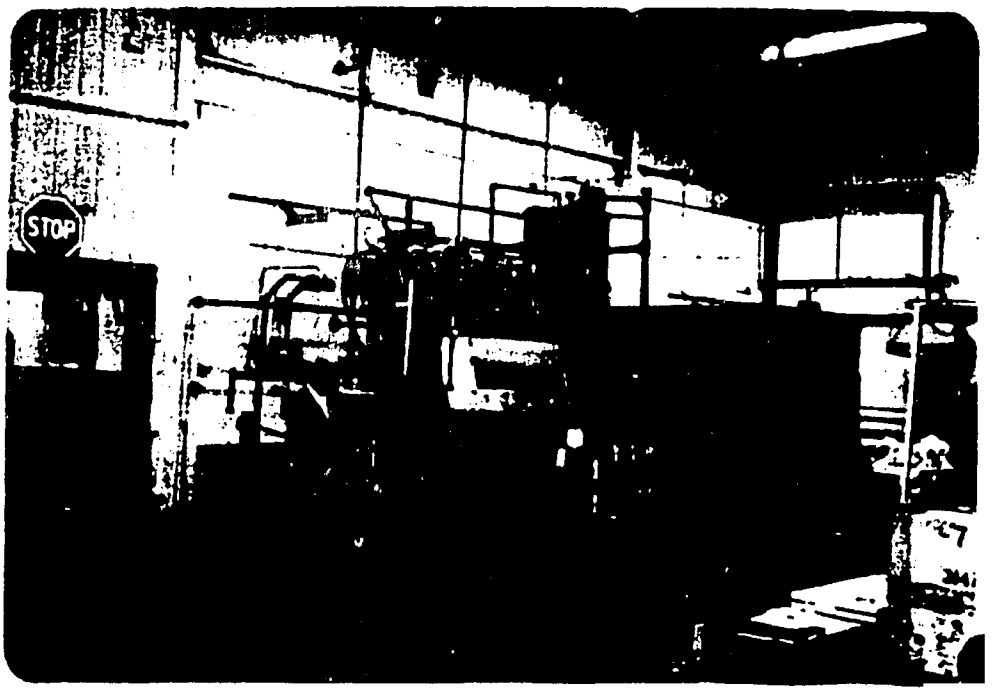

FILTER CHARACTERISTICS

Flowrate = 0.7 gpm/sq. ft. of filtering area

Filter quality = 4 ppm

Filter media = 105u opening recleanable polyester belt, precoat and bodyfeed with D.E.

D.E. cost = 0.3¢/gal.

Cycle time = 45 - 60 minutes

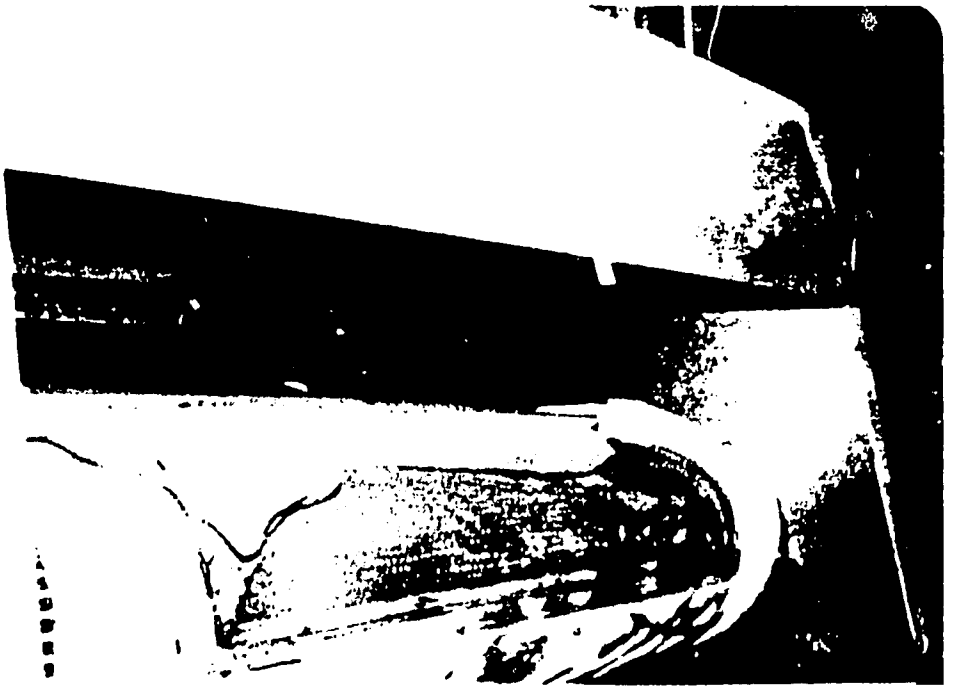

FILTER CAKE CHARACTERISTICS

Filter cake thickness = 1" D.E. + metal particles + aluminum oxide

Filter cake dryness = 50% solids by weight

REPRESENTED BY

H. A. WILSON COMPANY
POST OFFICE BOX 252
LEXINGTON MA 02173
PHONE 617/861-8000

OBERLIN FILTER COMPANY
Division of Production Service Company, Inc.
404 PILOT COURT
WAUKESHA, WI 53188-5785

OBERLIN AUTOMATIC PRESSURE FILTER AN-22

DEOILING OF GRINDING SWARF

APPLICATION

A machine shop is O.D. grinding steel on Cincinnati grinders using 100% mineral oil as a coolant. Periodically, the sump on each individual grinder is cleaned out. This dirty oil, which is heavily contaminated with swarf, is dumped into the dirty compartment of a two compartment tank. The Oberlin Model HA filter is mounted on top of the two compartment tank. An air operated diaphragm pump pumps the dirty oil into the filter where the swarf is filtered out using a recleanable belt forming a dry filter cake. The filtered oil flows out of the filter into the clean compartment. This oil is then reused and the dry metal swarf filter cake disposed of at a landfill. An agitator is mounted in the dirty compartment to keep the swarf in suspension prior to filtering. (See drwg. #2191-49A)

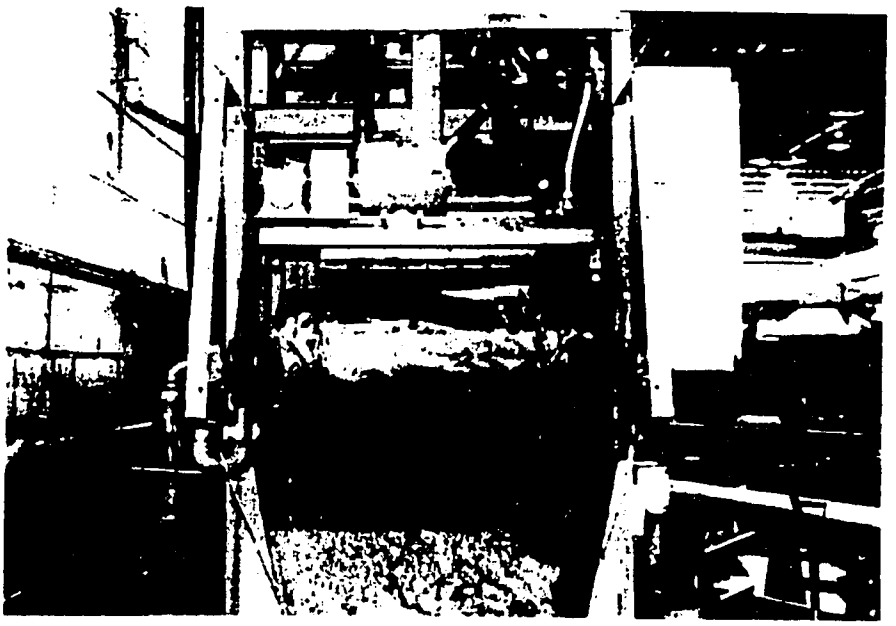

FILTERING CHARACTERISTICS

Cycle time = 4 minutes

Filter media = 105u opening recleanable belt

Dewatering rate = 125 lbs. (dry weight)/hr./sq. ft.

FILTER CAKE CHARACTERISTICS

Filter cake thickness = 1 inch

Filter cake = 86% solids by weight

Filter cake density = 68 lbs. (dry weight)/cu. ft.

REPRESENTED BY:

H. A. WILSON COMPANY
POST OFFICE BOX 252
LEXINGTON MA 02173
PHONE 617/861-8000

OBERLIN FILTER COMPANY
Division of Production Service Company, Inc.
404 PILOT COURT
WAUKESHA, WI 53188-5785

OBERLIN AUTOMATIC PRESSURE FILTER AN- 24

Oberlin Automatic Diatomaceous Earth Precoat and Bodyfeed Filtration System

Drawing #2191-101 illustrates how an Oberlin Automatic diatomaceous earth (D.E.) filtration system would appear. This approach is used when high quality filtration is required or when gelationous (e.g. slimy) sludges need to be dewatered. The D.E. precoat and bodyfeed tank is filled with a mixture of clean water and D.E. The filter is equipped with a recleanable filter belt.

At the start of the cycle, called precoating, the filter and metering pumps are turned on, valves V1 and V4 are open, and V2 and V3 are closed. During precoating, which is controlled by time, a thin layer of D.E.(about 1/8 to 1/4" thick) is formed on top of the recleanable belt. After precoating, valves V1 and V2 are closed and opened respectively. The process stream or wastewater is now pumped into the filter along with a small quantity of D.E. through the metering pump. This is called bodyfeeding. Bodyfeeding with D.E. prevents the filtered solids from forming a continuous layer across the filter cake which could "blind" it up and cause short filter cycles. After the filtrate has obtained the necessary clarity, the outlet three way recirculation valve is activated (V3 and V4 are opened and closed respectively). The three way recirculation valve is controlled by time. At this point, the filter is in the filtration mode.

After the pressure in the filter builds up the indexing point (25 to 30 psi), the filter cake is dried out by air flowing under pressure and discharges from the filter. The next cycle starts again automatically. The Oberlin D.E. filter offers the following advantages:

1.) High quality filtration because a thick, (up to 2") uniform layer of D.E. can be built up on a horizontal filter belt. Filter cake uniformity problems, such as on vertical leaf pressure or rotary vacuum drum filters, are thus eliminated.

2.) Typically, the discharged filter cake is 50% solids by weight making for easy landfill disposal.

3.) The filter is 100% automatic and self-cleaning. No operator is required.

2191-101

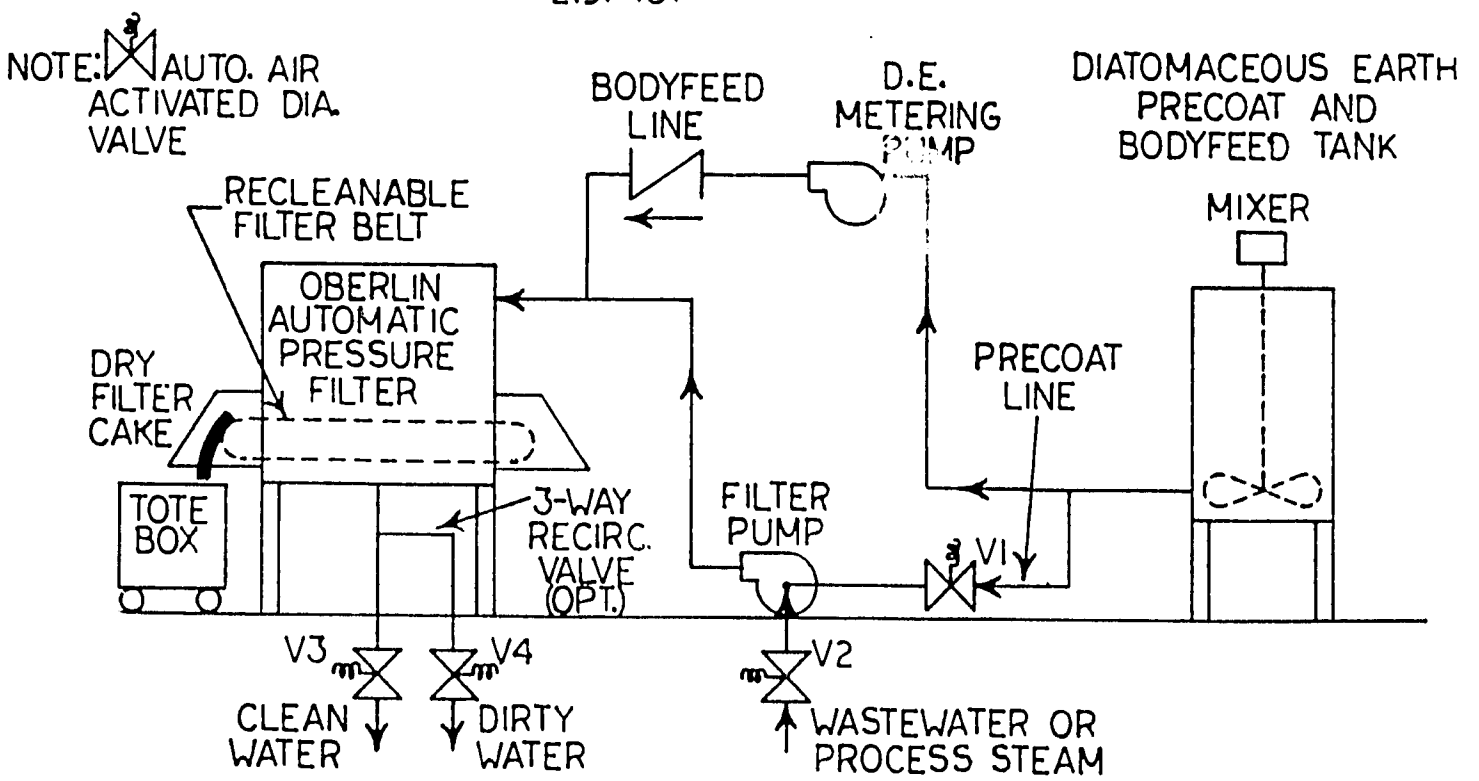

H. A. WILSON COMPANY
Manufacturers' Representatives
P. O. Box 252 Lexington, MA 02173

MANUFACTURED BY: ***OBERLIN FILTER COMPANY***
Division of Production Service Company, Inc.
404 PILOT COURT

OBERLIN AUTOMATIC PRESSURE FILTER AN- 25

Machining Coolant Filtration Using Oberlin Automatic Pressure Filter

Drawing #2191-18B illustrates how the Oberlin Automatic Pressure Filter is used in a centralized coolant filtration system. Dirty coolant either gravity flows or is pumped into the dirty compartment tank of a two compartment tank. The filter is mounted on top of the tank to conserve floor space. The dirty coolant is pumped into the filter by the filter pump. The metal swarf is filtered out with a recleanable belt or disposable filter media forming a thick, dry filter cake. The clean coolant gravity flows out of the filter into the clean compartment from where it is pumped back to the individual machines. Typically, the filter will filter at a higher rate than the clean coolant demand. The excess clean coolant will fill up the clean compartment and overflow the weir into the dirty compartment where it is refiltered. This overflowing also aerates the coolant minimizing bacteria growth and subsequent dermatitus problems.

Other advantages of the Oberlin Automatic Pressure Filter are:

1.) Due to high filtering pressure (30 psi) capability, thick filter cakes (½ to 3") are formed which act as a fine filter media. This "self-filtration" results in better than 5u quality filtration.

2.) Filter cakes are dry, about 96% solids by weight, making for easy landfill disposal.

3.) Low operating cost. Since thick filter cakes are formed, unlike gravity or vacuum filters, filter media costs are minimal. Inherently simple design results in typically less than 25 hrs./yr. maintenance time.

4.) Lifetime of coolants extended indefinitely.

5.) Elimination of individual machine sump cleaning since filter removes all the swarf.

6.) Less maintenance on machine tool because ultra-clean coolant is being used.

7.) Longer grinding wheel or tool lifetime with improved finishes and tolerances on work pieces.

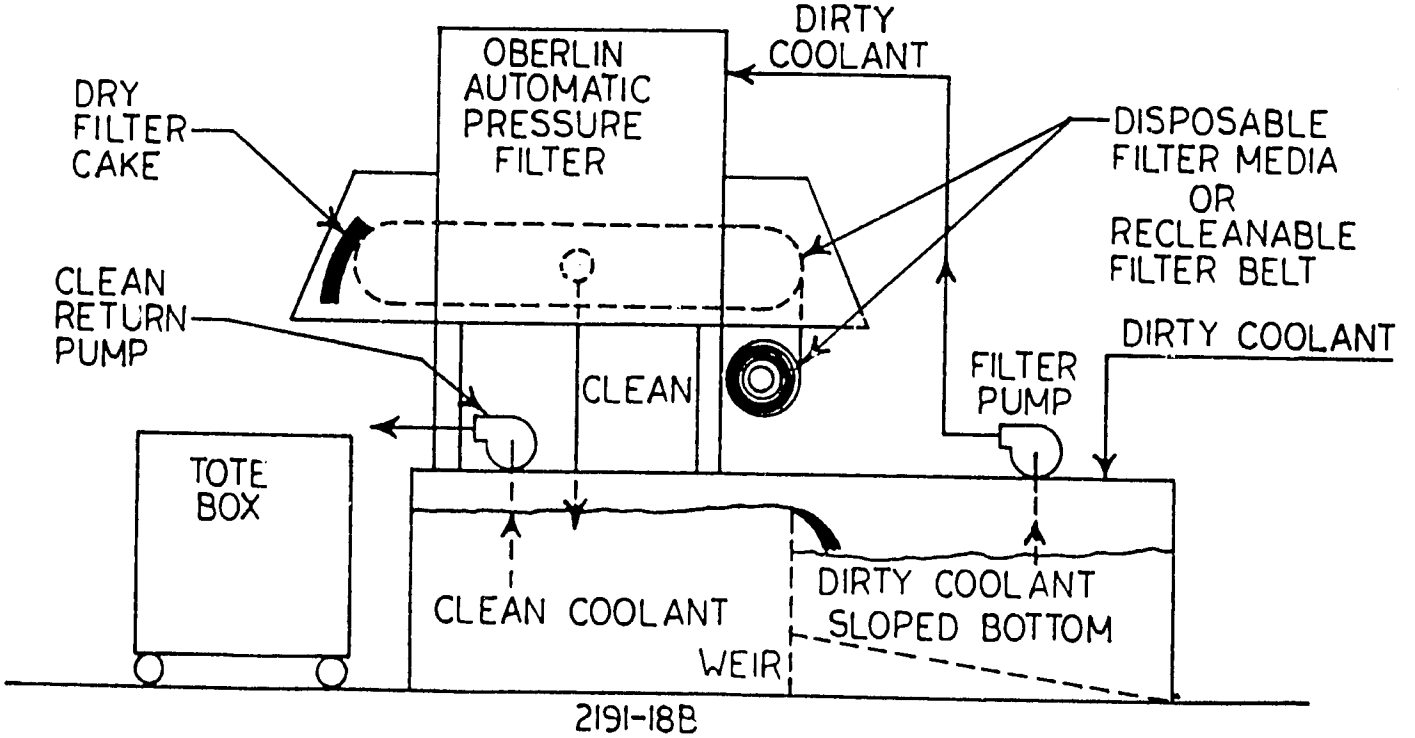

2191-18B

H. A. WILSON COMPANY
Manufacturers' Representatives
P. O. Box 252 Lexington, MA 02173
(617) 861-8000

OBERLIN FILTER COMPANY
Division of Production Service Company, Inc.
404 PILOT COURT
WAUKESHA, WI 53188-5785

OBERLIN AUTOMATIC PRESSURE FILTER AN-25 cont'd.

Drawing #2191-13 illustrates how the Oberlin Automatic Pressure Filter is incorporated into an overall centralized coolant filtration system. The dirty coolant either gravity flows or is pumped overhead to the dirty compartment of the two compartment holding tank. This drain line is typically a four inch ABS plastic line with socket fittings commonly used in sewage drainage lines. The clean return line is typically a two inch PVC plastic line with lateral takeoffs for the individual machines. The flow to a given machine is controlled by an automatic valve which in turn is controlled by the machine's controls.

The clean line is connected to the dirty line through a pressure relief valve. This valve serves two purposes. First, it keeps the clean line at a constant head pressure irregardless of how machines are demanding clean coolant. This keeps the flow of clean coolant constant to an individual machine. Secondly, the excess clean coolant flows through the pressure relief valve into the dirty line constantly flushing it.

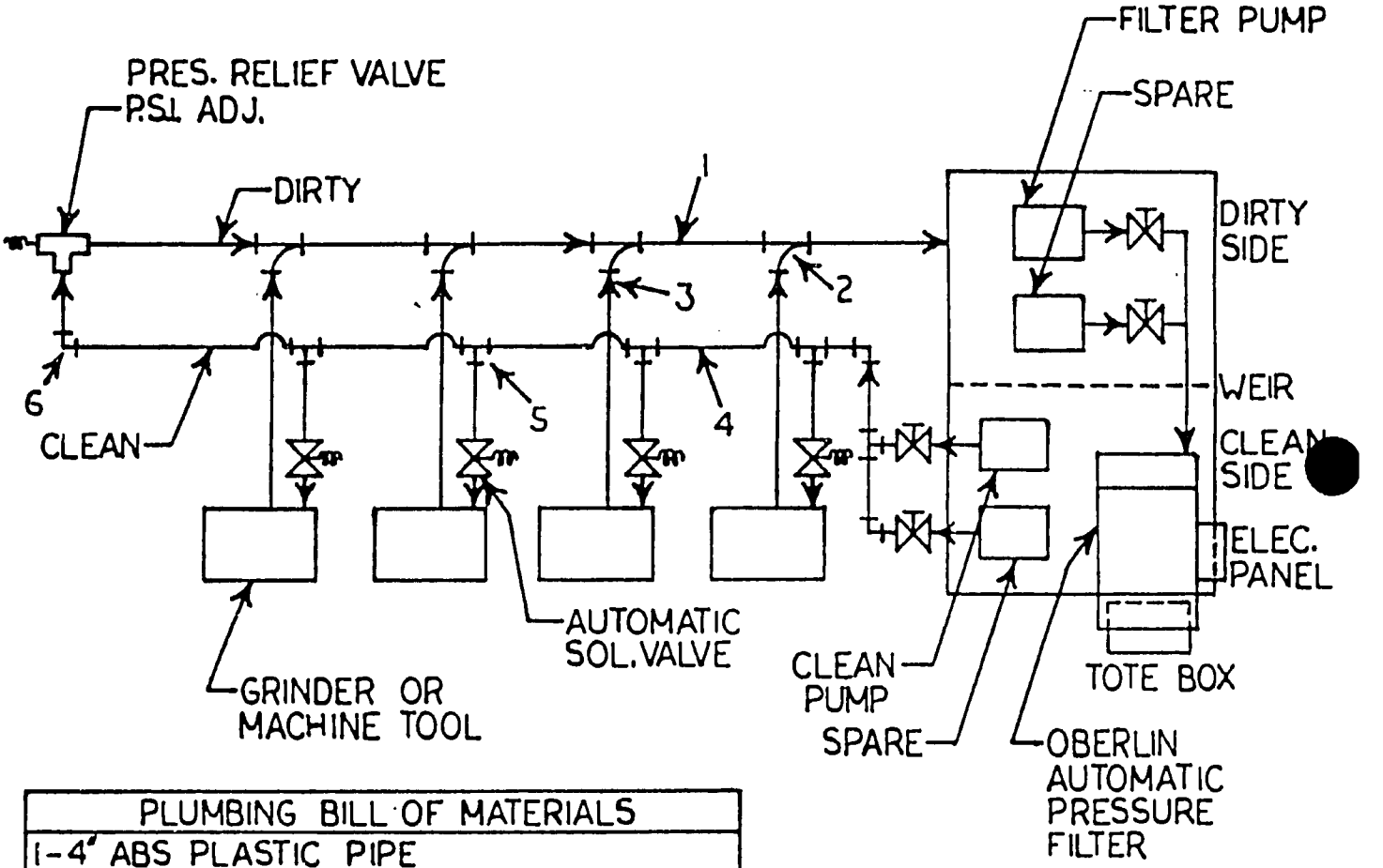

PLUMBING BILL OF MATERIALS
1-4" ABS PLASTIC PIPE
2-ABS TEE, 5811-4"X4"X4"
3-REDUCER BUSHING AND LINE SIZE TO BE DETERMINED
4-2" PVC, SCH. 80
5-PVC, SCH. 40 SOCKET FITTING 4611-TEE-2"X2"X½"
6-PVC SCH. 40 SOCKET FITTING 4607-90-2"X2" 4601-COUPLING-2"

2191-13

MANUFACTURED BY:

OBERLIN FILTER COMPANY
Division of Production Service Company, Inc.
404 PILOT COURT
WAUKESHA, WI 53186-5785

H. A. WILSON COMPANY
Manufacturers' Representatives
P.O. Box 252 Lexington, MA 02173
(617) 861-8000

OBERLIN AUTOMATIC PRESSURE FILTER AN-26

Machining Swarf Coolant Dewatering or Deoiling System

Drawing #2191-49 illustrates an Oberlin machining swarf dewatering or deoiling system. The dirty coolant is removed from the machine tool sump and either dumped or pumped into the dirty compartment of a two compartment holding tank. An agitator is used to keep the swarf in suspension. The air operated diaphragm pump pumps the heavily contaminated coolant into the Oberlin filter where the swarf is filtered out with a recleanable belt. The filtered coolant flows out of the filter into the clean compartment of the holding tank. This clean compartment fills up and overflows the weir back into the dirty compartment where it is refiltered. The clean coolant is then returned to the machine for reuse.

Periodically, the filter cycles and discharges a dry filter cake in excess of 80% solids by weight allowing for easy disposal at a landfill. Other advantages are:

1.) 100% automatic and self-cleaning.

2.) Recleanable filter belt and low power consumption which minimize operating costs.

3.) Low maintenance due to inherently simple design. Typically less than 25 hrs./yr. maintenance.

4.) Less than 50 sq. ft. of floor space required.

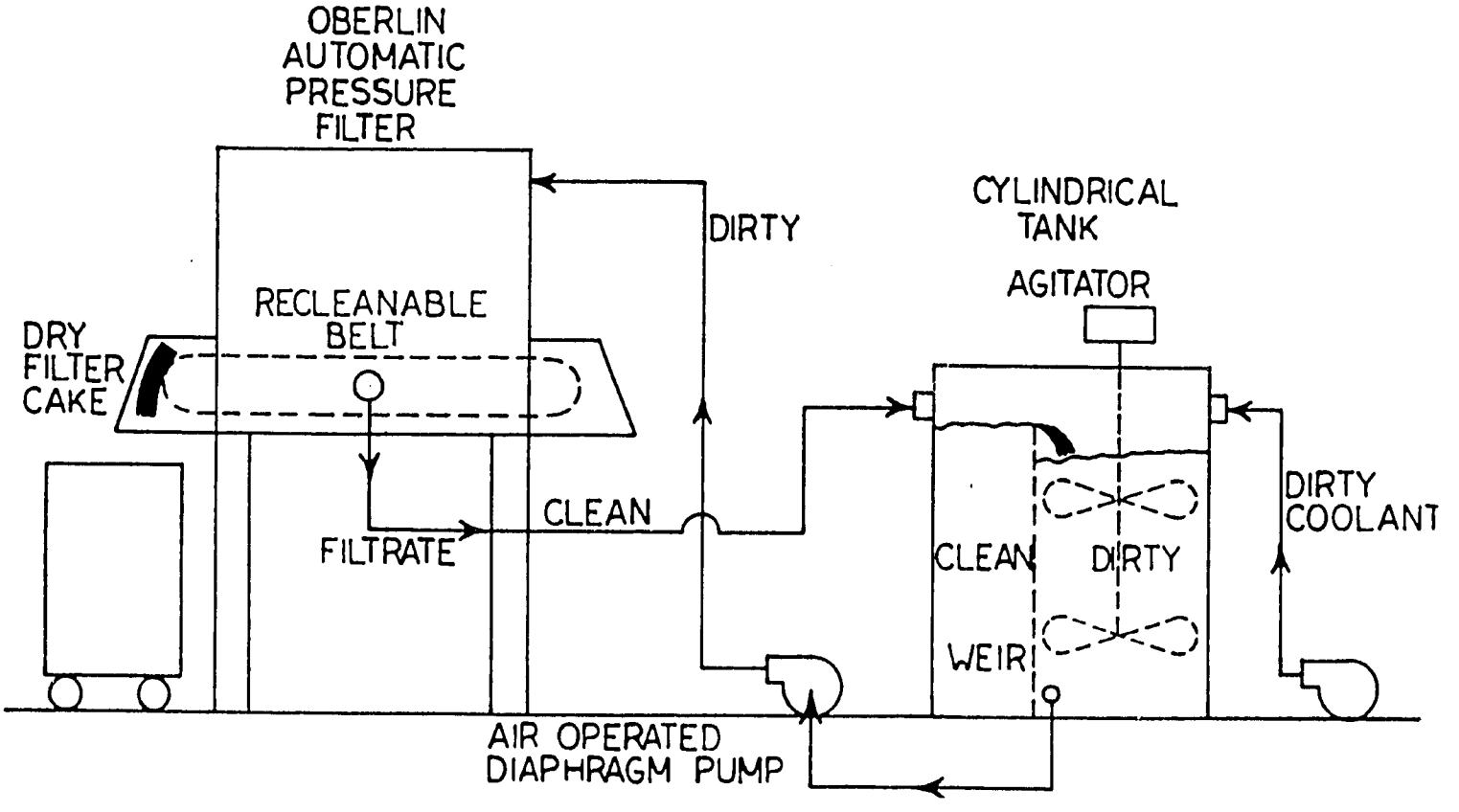

2191-49

MANUFACTURED BY:

OBERLIN FILTER COMPANY
Division of Production Service Company, Inc.
404 PILOT COURT
WAUKESHA, WI 53188-5785

H. A. WILSON COMPANY
Manufacturers' Representatives
P. O. Box 252 Lexington, MA 02173
(617) 861-8000

DRAMIATICALLY IMPROVE A LARGE CENTRAL WITH A SMALL OBERLIN

DISCHARGE ALL SOLIDS DRY, AUTOMATICALLY

PRODUCE A SOURCE OF HIGH QUALITY COOLANT FOR CRITICAL GRINDING AND MACHINING OPERATIONS

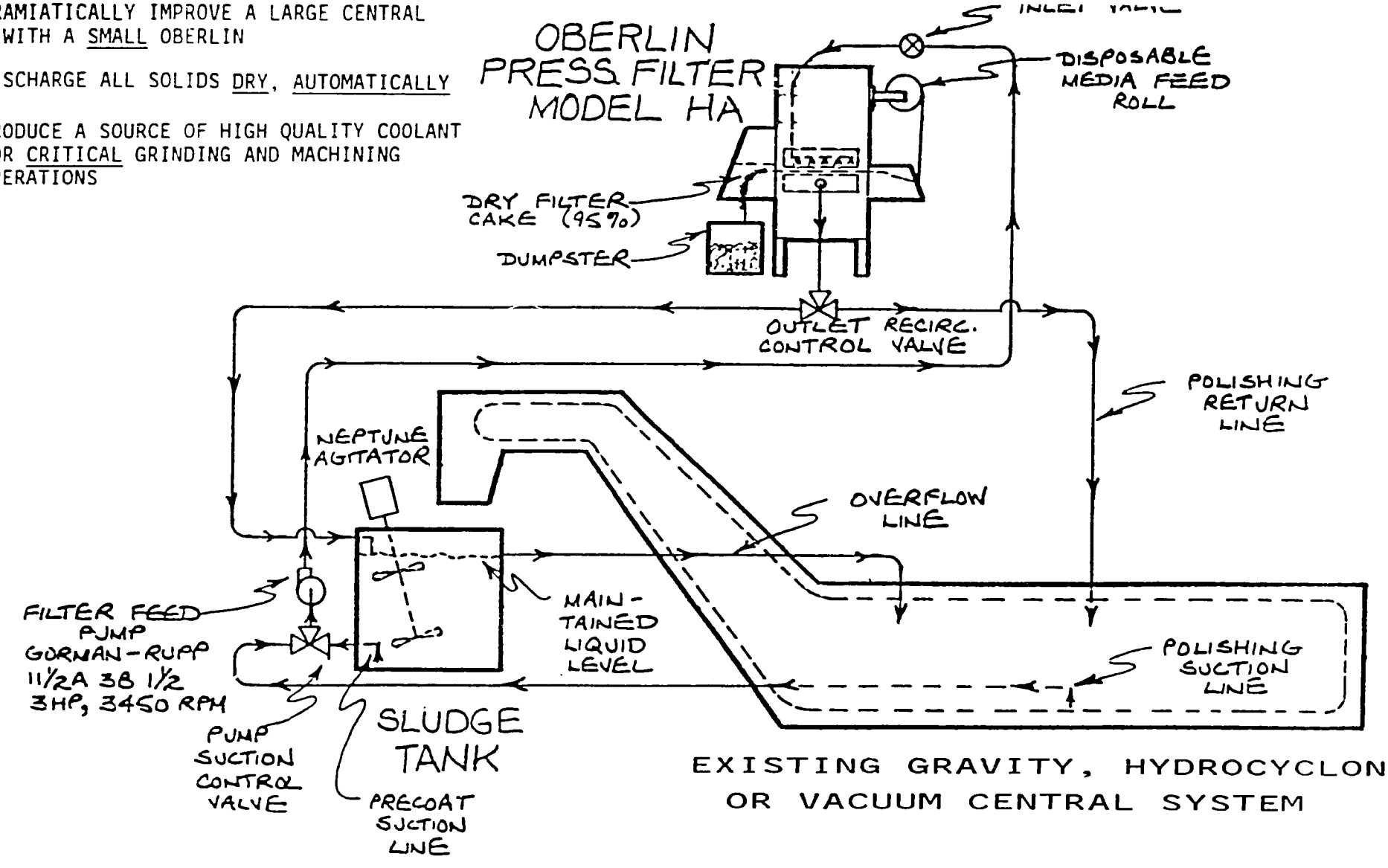

EXISTING GRAVITY, HYDROCYCLONE, OR VACUUM CENTRAL SYSTEM

REVISIONS				

H. A. WILSON COMPANY
Manufacturers' Representatives
P.O. Box 252 Lexington, MA 02173
(617) 861-8000

TITLE: UPGRADE CENTRAL SYSTEM WITH OBERLIN FILTER ON BY-PASS

OBERLIN FILTER COMPANY, DIV. OF PRODUCTION SERVICE CO.
1931 MACARTHUR RD., WAUKESHA, WI 53188 (414)547-4900

DRWN. BY: CJE	SCALE: NA	DRW. NO.: 2191-226	APPRVD. BY: WP
DATE: 3/31/87	MATL.	SHEET OF	DATE: 3/31/87

PROLONG THE LIFE OF YOUR COOLANT INDEFINITELY ! !

OBERLIN PRESSURE FILTER

OBERLIN

Proper coolant filtration will extend the service life of water based coolants a **minimum** of 5 to 10 times and straight oils **indefinitely!!**

Most coolant filters rely on establishing a filter "cake" of swarf to perform the actual filtration. The **OBERLIN PRESSURE FILTER** produces *thicker* cakes and thicker cakes produce *finer* quality filtrates.

Periodic processing of sumps is extremely labor intensive and wet grinding swarf is as difficult and expensive to dispose of as liquids.

The **OBERLIN PRESSURE FILTER** provides a number of benefits:

- **CONSISTENTLY CLEAN COOLANT**
  - -excellent coolant clarity. 5 micron is the norm; not the exception.
- **AUTOMATIC DRY SWARF DISCHARGE**
  - -free of coolant. Over 95% solids by weight. Reduced coolant loss. Potentially hazardous solids more suitable for disposal.
- **COOLANT RECLAMATION**
  - -extends coolant life a minimum of 5 to 10 times with no labor, no sumpsuckers, no high speed equipment
- **LESS WHEEL DRESSING**
  - -reduced machine and sump maintenance. Better surfaces and finishes.

Complete systems available with filter, tanks, pumps, and flumes. Suitable for oil, water soluble and synthetic coolants on grinding, honing and lapping operations.

Extensive applications in gear grinding, surface grinding, CBN and creep feed grinding.

OBERLIN FILTER COMPANY
DIV. OF PRODUCTION SERVICE CO., INC.
404 PILOT COURT
WAUKESHA, WISCONSIN 53188
PHONE: (414) 547-4900
FAX: (414) 547-0683

FOR MORE INFORMATION CONTACT:

OBERLIN

H. A. WILSON COMPANY
Manufacturers' Representatives
P.O. Box 252 Lexington, MA 02173
(617) 861-8000

DOES YOUR COOLANT LOOK LIKE THIS...

.WHEN IT SHOULD LOOK LIKE THIS??

THE OBERLIN TUBULAR FILTER DOES THE JOB!!

OBERLIN

HOW THE OBERLIN TUBULAR FILTER SYSTEM WORKS

The OBERLIN TUBULAR FILTER consists of a vertical tank and tube sheet which support tubes made of woven steel wire mesh. Standard models contain 148, 200, or 376 tubes. These tubes are precoated on the outside with filter aid. A filter pump forces the dirty liquid thru the filter aid and wire mesh into the center of the tube. The filtrate flows up thru the tubes and exits at the top side of the filter. Filter aid is also injected as bodyfeed during the filtering cycle.

As the dirt is trapped in the filter cake, the backpressure in the filter shell will increase. When this pressure reaches 30-35 psi, the tubes are automatically backwashed by momentarily reversing the flow thru the filter. This backwash fluid and filter cake exit the bottom of the filter into the backwash tank.

After the backwash cycle the system automatically initiates a new filtration cycle by precoating the filter tubes. Meanwhile, an OBERLIN PRESSURE FILTER is used to dewater the filter cake. The dewatering filter automatically enters standby when the backwash tank is empty. No operator is required to sequence the system thru any of its operations - it is completely automatic.

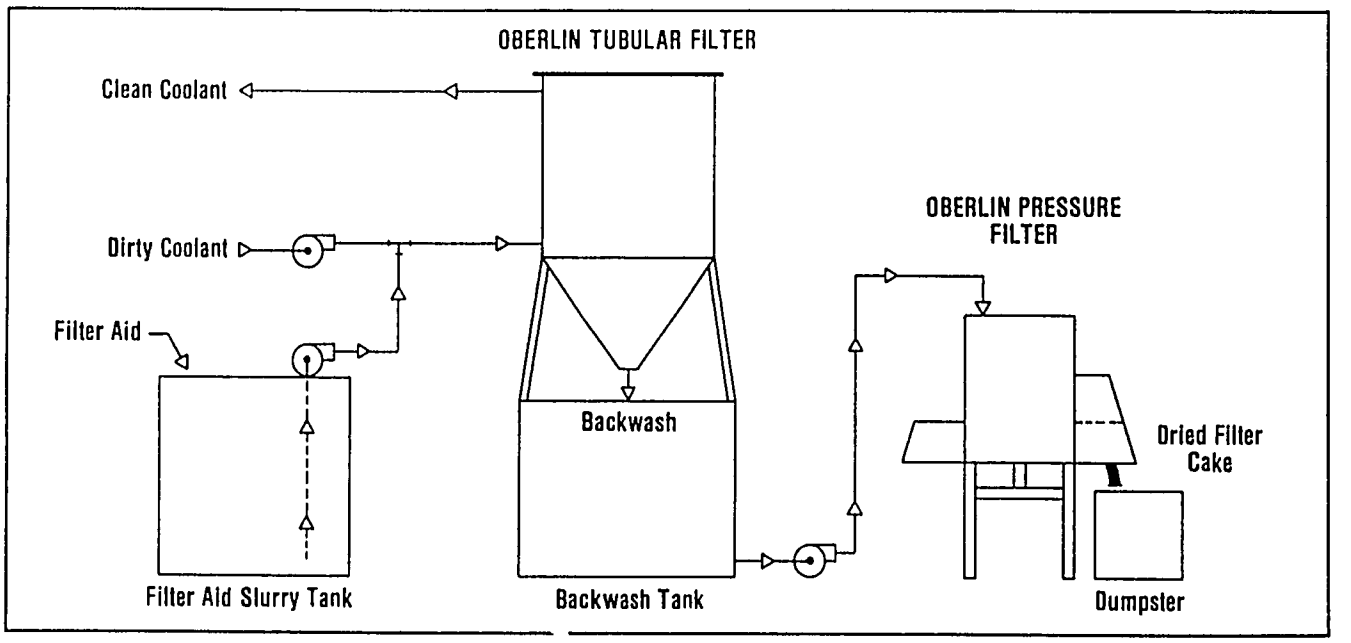

OBERLIN TUBULAR FILTER SYSTEM

Key aspects of the system are:

- **Totally automatic**
- **Dry swarf discharge - suitable for landfill**
- **Outstanding Filtrate Quality**

SPECIFICATIONS

MODEL	NO. TUBES	FILTER AREA	CAPACITIES	
			WATER	OIL (200 SSU)
2190-148	148	110 ft²	600 gpm	150 gpm
2190-200	200	150 ft²	800 gpm	200 gpm
2190-376	376	280 ft²	1600 gpm	400 gpm

TYPICAL APPLICATIONS

The OBERLIN TUBULAR FILTER works equally well on oil, water base coolants, and wastewater. Generally it is best applied to situations where solids content is relatively low, dirt particles have a high filtration resistance, high quality filtrate is required, and high net flowrates are necessary. When flowrates are lower, an OBERLIN PRESSURE FILTER with an automatic filter aid addition system may be more economical. The determining factor is filter area required. The OBERLIN PRESSURE FILTER has filter areas between 2.4 ft^2 to 48 ft^2 while the OBERLIN TUBULAR FILTER has from 110 ft^2 to 280 ft^2. Current tubular system installations include:

- SETTLING/DRAGOUT SYSTEMS
- BEARING FINISH GRINDING
- DRILL AND TAP GRINDING
- GLASS GRINDING
- HONING

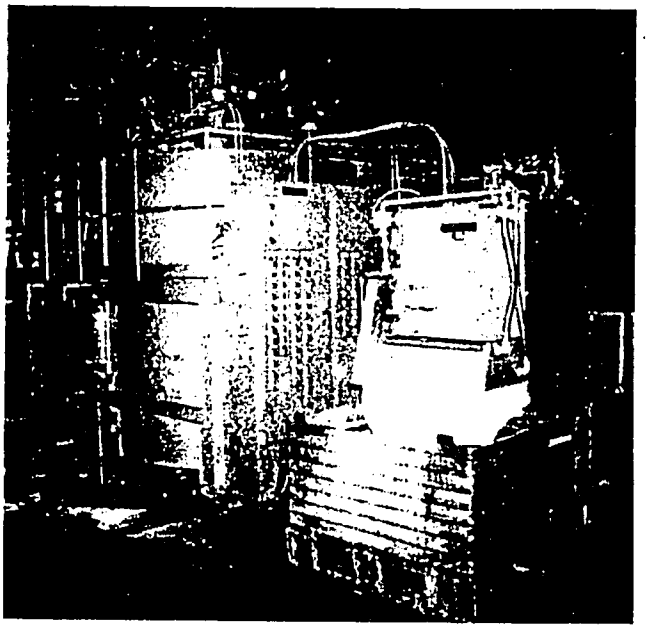

Slipstream on bearing finishing. Two 376 OBERLIN TUBULAR FILTERS together filter 3000 gpm out of a total flow of 4600 gpm to dragout/settling system. Semi-synthetic coolant. Solids levels reduced from 1000 ppm to less than 10 ppm above 5 microns.

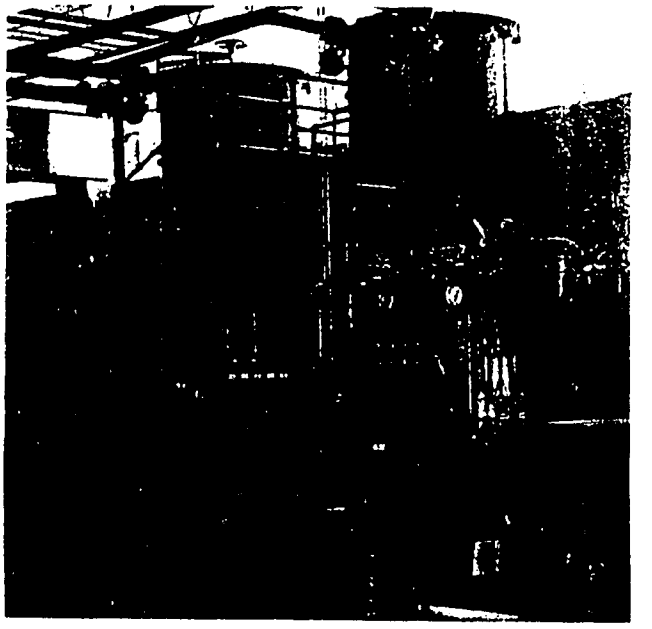

Drill and Tap grinding installation. Two 376 tube OBERLIN TUBULAR FILTERS (one on-line, one standby) with Model OPF2 OBERLIN PRESSURE FILTER, backwash tanks and filter aid slurry tank (not shown in photo above). 300 gpm of 200 SSU oil. Uses 50 lb. diatomaceous earth per three shift day. Oil droplets on front cover represent actual colors of coolant before and after system placed in operation.

If you have a settling/dragout system, you can efficiently remove fines and prevent buildup of solids in the system using an **OBERLIN TUBULAR FILTER SYSTEM.**

100

Proper coolant filtration will extend the service life of water based coolants a **minimum** of 5 to 10 times and straight oils **indefinitely!!**

The **OBERLIN TUBULAR FILTER SYSTEM** includes a tubular filter, backwash tanks, filter aid addition system and an OBERLIN PRESSURE FILTER used to dry the backwash from the tubular filter. This system provides a number of benefits:

- **HIGH QUALITY FILTRATION**
  -Excellent coolant clarity. Clarity better than 10ppm of 5 micron particulates.
- **DRY SWARF DISCHARGE**
  -Free of coolant. Oberlin Pressure Filter used to dewater spent filter aid. Reduced coolant loss. Suitable for dry landfill disposal. 60-70% solids by wt.
- **FULLY AUTOMATIC OPERATION**
  -No operator needed for cycling the system.
- **COOLANT RECLAMATION**
  -Extends coolant life a minimum of 5 to 10 times with no labor, no sumpsuckers, no high speed equipment.
- **MINIMUM DOWNTIME FOR INSTALLATION**
  -Can be installed without shutting down existing dragout systems.
- **FULL FLOW OR SLIP STREAM OPERATIONS**
  -Stand alone systems for full filtration or polishing capabilities for existing dragout/settling systems.

Available options include:
- -total turnkey installation
- -programmable controllers
- -customized controls, sizing, pumps and tankage to accommodate your particular needs

OBERLIN FILTER COMPANY
DIV. OF PRODUCTION SERVICE CO., INC.
1931 MAC ARTHUR ROAD
WAUKESHA, WISCONSIN 53188
PHONE: (414) 547-4900
FAX: (414) 547-0683

FOR MORE INFORMATION CONTACT:

H. A. WILSON COMPANY
Manufacturers' Representatives
P.O. Box 252 Lexington, MA 02173
(617) 861-8000

OBERLIN

PASTEURIZATION: KEY TO QUALITY COOLANT RECYCLING

By:
George F. Williams P.E.
Vice President, Engineering
and
James A. Geraghty
Sanborn Associates, Inc.
Wrentham, Massachusetts

...flash pasteurization offers the safest, most economical and most effective means of coolant biological purification.

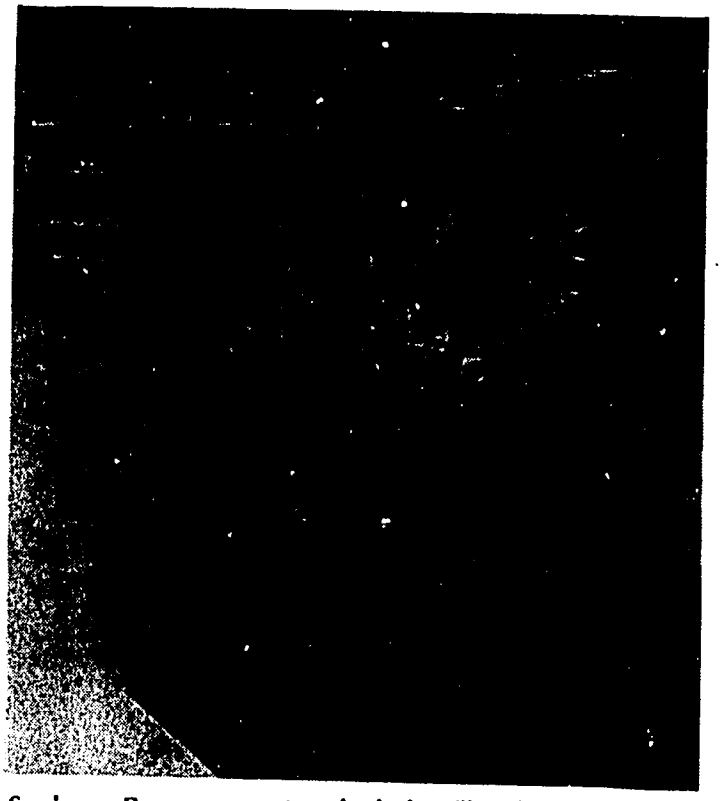

1. Integrated Sanborn Recovery system includes filtration, centrifugation, and pasteurization, along with automatic controls and self-contained tankage.

...the effort to find effective ways to extend coolant life is currently taking on a new urgency for many metalworking managers.

Extensive plant operating results have recently confirmed the laboratory studies that have indicated that flash pasteurization offers the safest, most economical and most effective means of coolant biological purification. By restoring coolants to biological quality levels which are equal to new, pasteurization increasingly plays a key role in integrated on-site recycling systems, which can completely eliminate coolant disposal.

Biological contaminants, including multiple strains of bacteria, fungus and mold, have long been known to rapidly degrade all water-based, metalworking coolants. Their effects include worker dermititis and skin infection, coolant acidity and destabilization and a highly unpleasant rancid odor.

At the same time, the effort to find effective ways to extend coolant life is currently taking on a new urgency for many metalworking managers. A small number of leading firms have known for several years that they could significantly reduce replacement purchases, improve tool life and product quality by purifying and reusing dirty coolants. Now, sharp increases in disposal costs and more stringent environmental regulations are causing recycling methods to spread rapidly throughout the metalworking industry.

Against this backdrop, test and operating experiences with a recently developed flash pasteurization technology have demonstrated impressive results. In ten carefully controlled samples analyzed by professional microbiologists, a "biological kill" of greater than 99.9999% of existing bacteria, fungus and mold was found.[1] Unlike tests of chemical biocides, which are effective only against selected strains, these tests found no strains to have survived

ficient heat exchanger system rapidly recools the purified coolant, no rapid regrowth of any kind was found.

No Adverse Effects Found

102

Other studies have focussed on whether any harm was done to coolant emulsions or additives by heat treatment and have found no effect whatsoever.

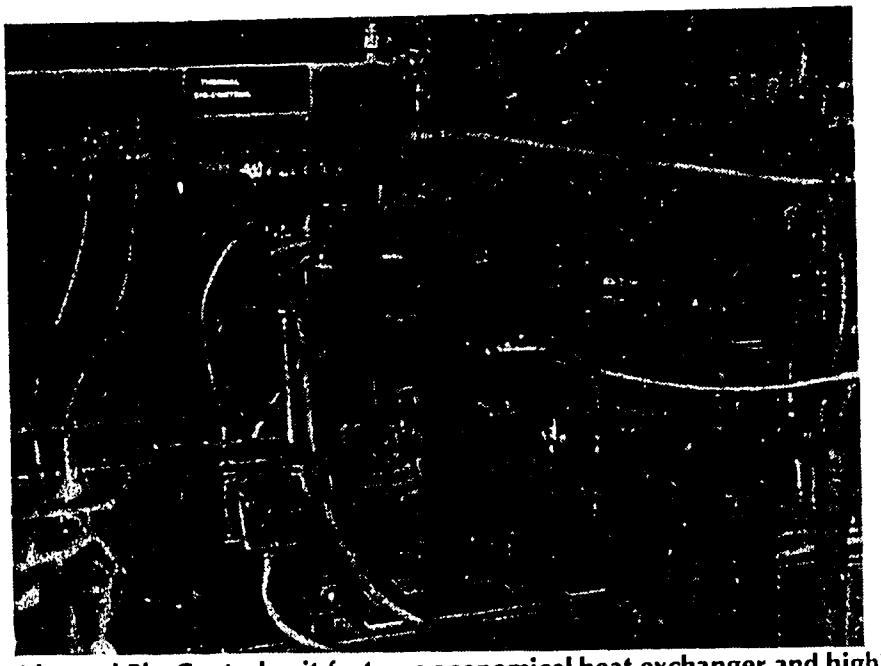

2. Thermal Bio-Control unit features economical heat exchanger and highly efficient flash pasteurization process with automatic control system.

Fig. 1: Effects of heat on recycled coolant quality.

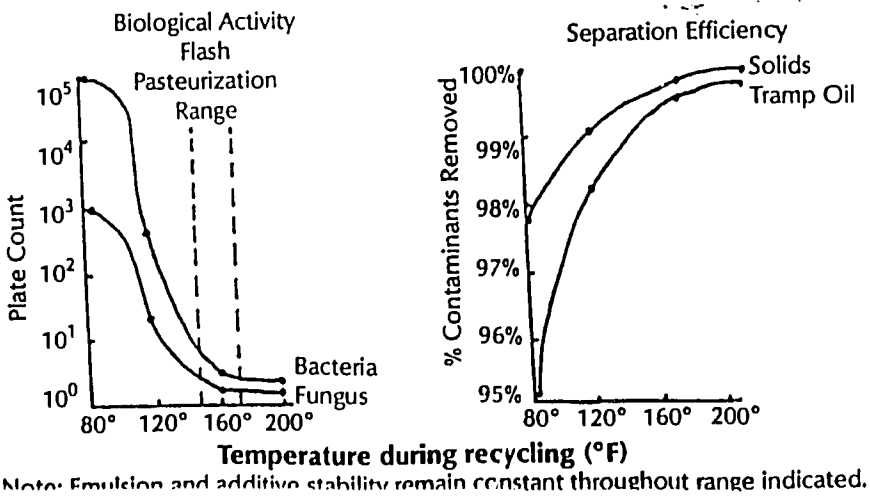

Note: Emulsion and additive stability remain constant throughout range indicated.

whether any harm was done to coolant emulsions or additives by heat treatment and have found no effect whatsoever. "These results are not really surprising", commented one researcher, "when you consider that fluids are only exposed to the flash pasteurization for a few minutes, and that they are exposed to far greater temperatures at the cutting interface." This lack of harm, like the effectiveness of purification, has been demonstrated on synthetics, semi-synthetics and soluble oils alike.

In addition to providing effective biological control, heat's effect on oil viscosity also significantly improves the efficiency of centrifugal removal of solid contaminants and tramp oils. In one test, coolant samples were run through high-speed centrifugal purifiers at five different temperatures. Purity levels increased progressively up to temperatures sufficient for flash pasteurization, with little or no change above that level.

The systems on which most of these results have been observed were supplied by the industry's leading designer and manufacturer of coolant recovery systems, Sanborn Associates, Inc., of Wrentham, MA. "We use pasteurization as part of an integrated process of coolant purification and recycling", reported George Sanborn, who developed the Sanborn pasteurization process, "Our systems employ a progressive series of filtration and high-speed centrifugation steps to remove virtually all solid and tramp fluid contaminants, and combine that with the pasteurizer for purification of biological contaminants. We find that with all three types of contaminants removed, our customers can continue to reuse their coolant indefinitely." Sanborn's results with pasteurization have been so consistently successful that the firm guarantees that biological levels in reprocessed coolant will be at or below those of freshly mixed fluids.

Successful Operations

Many metalworking plants using Sanborn systems have found just such results in practice. "I didn't like pasteurization at first, but after I saw what it did I reconsidered," commented Neil LaRosa, an engineer at Solar Turbines in San Diego. "The heat really did increase the separation efficiency as well as providing very effective biological control." Similarly, John Chinn, an engineer at Sigma Instruments in Braintree, MA, observed that "we used to have big problems with bacteria, but since we started using the pasteurizer it's completely gone."

One particularly knowledgeable pasteurization user is a GM engineer who wrote a thesis on bacteria control in coolants. "We had very heavy bacterial growth, and the bacteriacides were giving almost everybody dermititis. We had problems with morale, absenteeism, even people quitting. Pasteurization eliminated these problems. It's both safer and more effective— it's not selective, like biocides. We've had no problems at all with our coolant quality, and we even run some coolants that aren't on the Sanborn line through it to have them pasteurized."

Because many chemical biocides are highly toxic to people handling them, pressures to end or reduce biocide use are mounting. This trend is expected to accelerate with the onset of new federal OSHA regulations requiring both label identification of all chemicals contained in biocides and worker identification as to their potential side-effects.[2] The United Auto Workers has recently begun a campaign to rid UAW plants of all chemical biocides, noting that "pasteurization may offer the best hope as an alternative."[3] Many plant managers seeking to avoid labor troubles before they begin are finding pasteurization, with its superior performance, the perfect solution.

Economical Processing

Some people are surprised to learn that, in addition to being a safer and more effective means of biological control

RECYCLING ALTERNATIVES

3. Comparison of partial and integrated recycling options.

A. PARTIAL TREATMENT:

Many Technologies Can Remove One Contaminant

SOLIDS	TRAMP FLUIDS	BIOLOGICALS
Settling tanks	Oil Skimmers	Biocides
Dragouts	Aerators	Fungicides
Magnetic devices	Coalescers	Pasteurizers
Filters	Centrifuges	
Hydrocyclones		
Centrifuges		

B. INTEGRATED RECOVERY

ONLY INTEGRATED RECOVERY REMOVES ALL CONTAMINANTS IN A SINGLE SYSTEM

Fig. 2: Pasteurization Results By Industry

Industry	Period	Bacteria	Fungi/Yeast
Machinery	Before	30,000,000	5,000 mold
	After	None	None
Appliances	Before	5,230,000	7,000/89,000
	After	None	None
Turbines	Before	25,000,000	8,000 mold
	After	160	None
Ordnance	Before	None	80 mold
	After	None	None
Canmaking	Before	5,650,000	None
	After	None	None
Controllers	Before	2,470,000	None
	After	None	None
Seals	Before	None	None
	After	None	None
Forgings	Before	5,720,000	None
	After	None	None

Fig. 3: Effects of Heat on Contaminant Levels in Recycled Coolant

	Coolant	Tramp Oil	Solids	Bacteria	Fungus
Before Recycling	88.5%	10.0%	1.5%	10^7	10^3
Recycled at: ambient	98.7%	5.0%	.8%	10^7	10^3
Recycled at: 120°	99.5%	2.5%	.3%	10^5	10^2
Recycled at 165°	99.7%	.2%	.1%	None	None
Recycled at: 190°	99.7%	.2%	.1%	None	None

Note: Heat also increases the throughput rate and capacity of centrifugal processing. A system with a nominal rate of 60 gallons per hour has the approximate following capacities at the temperatures indicated:

ambient: 60 GPH
120°F: 65 GPH
165°F: 75 GPH

104

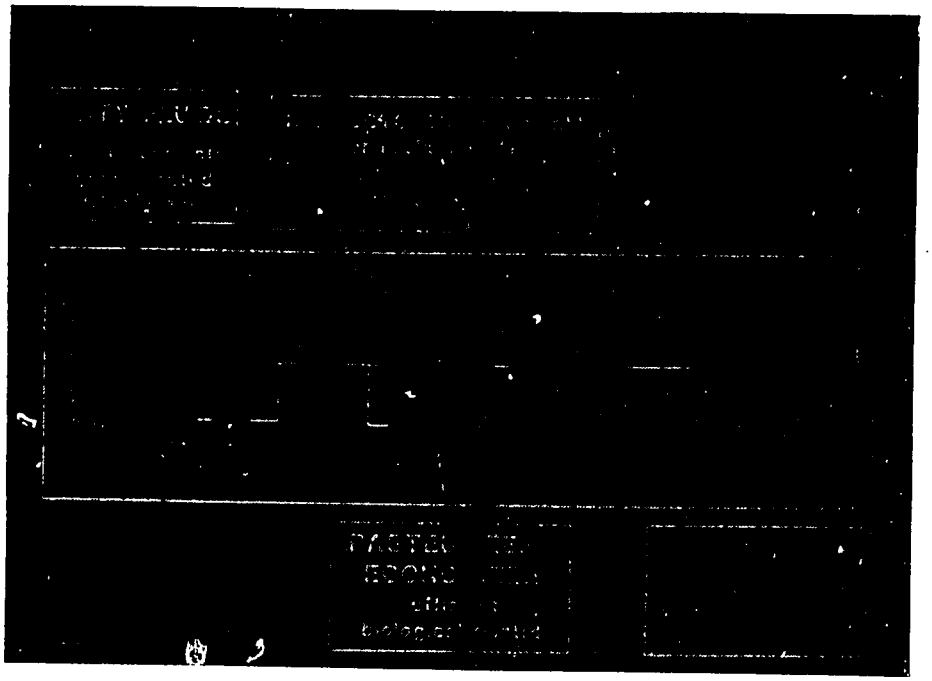

4. Pasteurization is a key part of an integrated system removing all fluid contaminants allowing indefinite reuse of coolants.

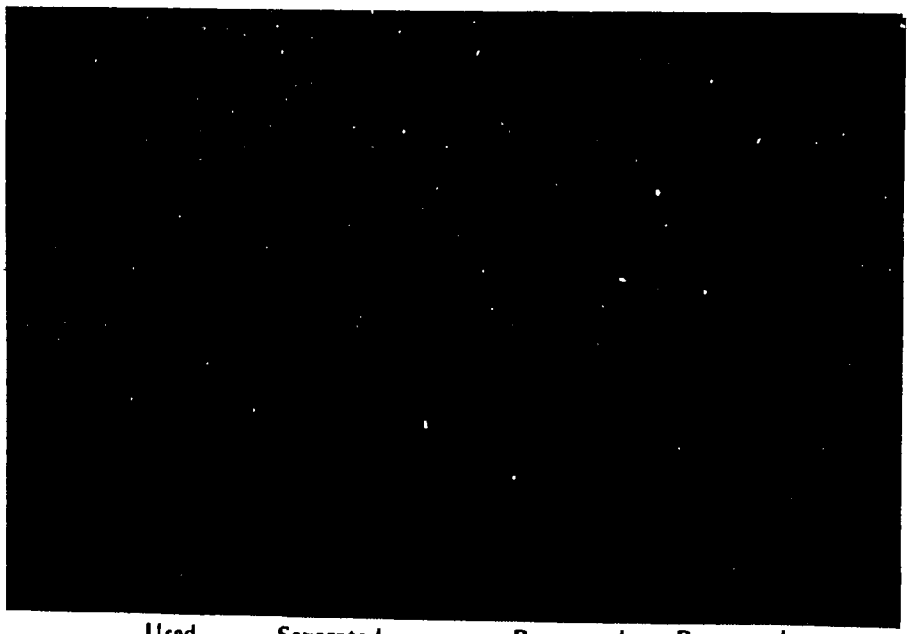

Used Coolant | Separated Contaminants | Recovered Coolant | Recovered Oil

5. Results of integrated recycling, with pasteurization, show dramatic differences between "before" and "after" fluids.

Again, recent technological advances have significantly reduced energy requirements. For example, a heat exchanger system, which rapidly heats incoming fluids and recools outgoing fluids, is standard equipment on most Sanborn systems. Combined with the use of a low-watt density heater and efficient thermostatic control, such features keep the operating costs of pasteurization to less than a penny a gallon, compared to about five cents a gallon for routine biocide use.

That the emergence of pasteurization is becoming the preferred means of keeping coolants free of biological growth should not really be surprising. The noted microbiologist, Dr. Harold Rossmore, observed many years ago that "There is no universal biocide - one that will work equally well in all fluids, against all kinds of microorganisms. . . . Thermopasteurization, using levels of heat that are less than sterilizing, is an inexpensive and safe method of control.[4]"

Despite its well-known potential, pasteurization is only now finding widespread industrial acceptance for coolant biological control. As with many other technologies, it has accumulated enough laboratory studies and operating evidence for the new procedure to become established as the industry standard. With its growing record of impressive successes, it appears that that day is soon arriving for pasteurization in the metalworking community.

Footnotes:

1. *Data on file at Sanborn Associates, Inc., Wrentham, MA, (617-384-3181)*
2. *U.S. Occupational Safety and Health Administration (OSHA), Hazard Communication Standard, 29 C.F.R. 1910. 1200*
3. *UAW, Occupation Health and Safety Newsletter, 1982 #4.*
4. *"Extending Cutting Fluid Life", Dr. H. W. Rossmore, Manufacturing Engineering, Nov. 1975.*

LIQUACLONE®
Solids Clarifier System

Efficient Hydrocyclonic Separation of Solids from Machining Liquids and Parts Washer Solutions

Liquaclone® Series provides vortex effect centrifugal separation of granular solids from the liquid discharge of machines such as centerless grinders, OD grinders and parts washers. It removes both metallic and non-metallic particles without the need for filtration media and operates independently of the production machinery.

The Liquaclone® clarifier stage has no moving parts and is virtually maintenance free. A heavy duty pump provides pressurized flow to the clarifier, creating a cyclone/vortex effect for inertial separation of particulate matter heavier than the fluid medium. Low differential operating pressure of 15 psi assures minimum heat generation and minimum surface wear in the Liquaclone®.

Liquaclone® clarifiers are available in compact, easy-to-install models that can be fitted to existing dragout tanks and central systems.

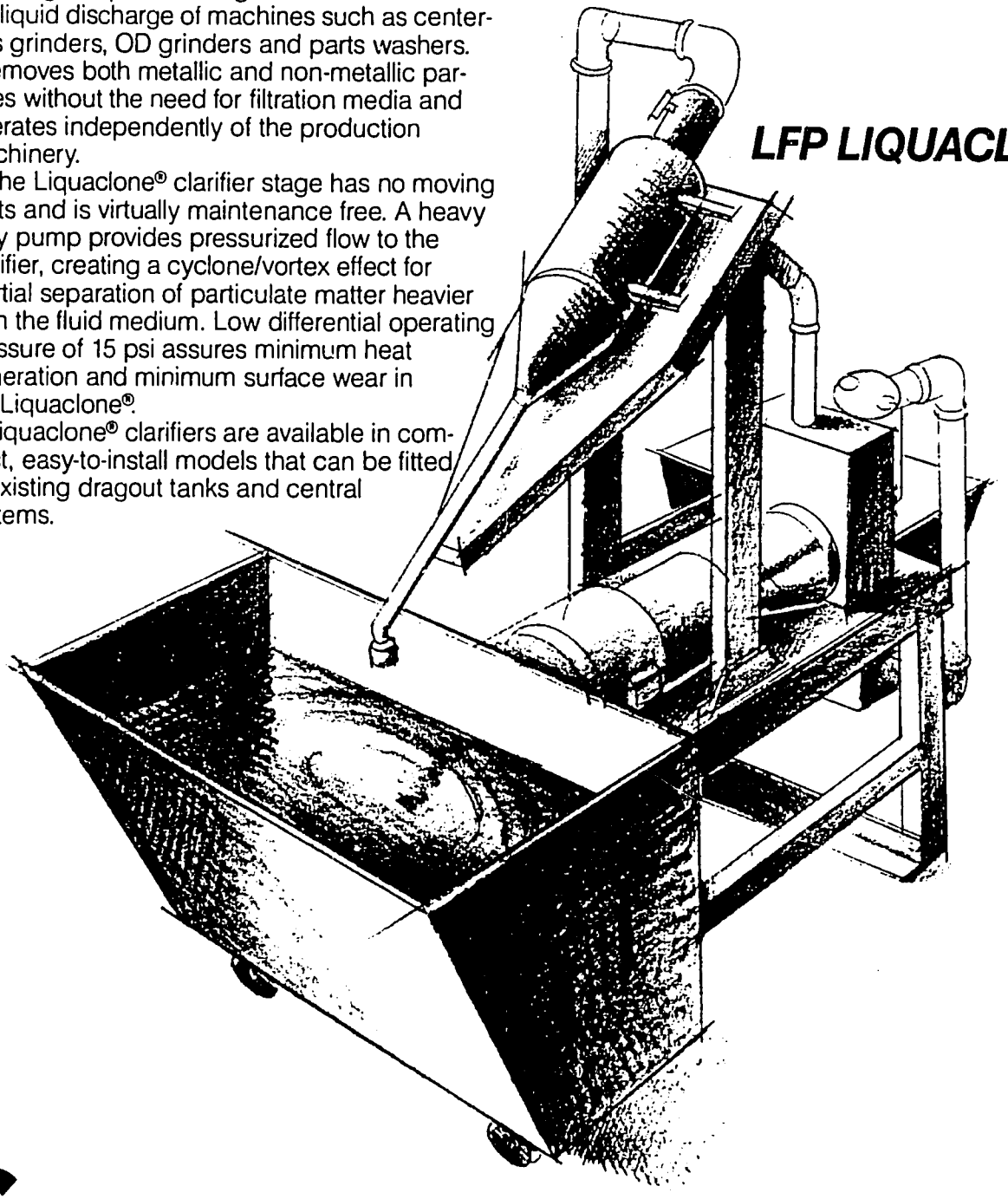

SANBORN/DONALDSON
Leaders in Separation Technology

106

LIQUACLONE®
Systems Operation

Contaminated liquid from production flows through STRAINER which catches rags and debris, into SOLIDS PICK-UP. FEED PUMP directs fluid to the LIQUACLONE®. Solids deposit in SOLIDS CART with overflow return to SOLIDS PICK-UP. Clarified liquid flows into CLEAN FLUID RESERVOIR and is returned by SUPPLY PUMP to MACHINE TOOL SUMP.

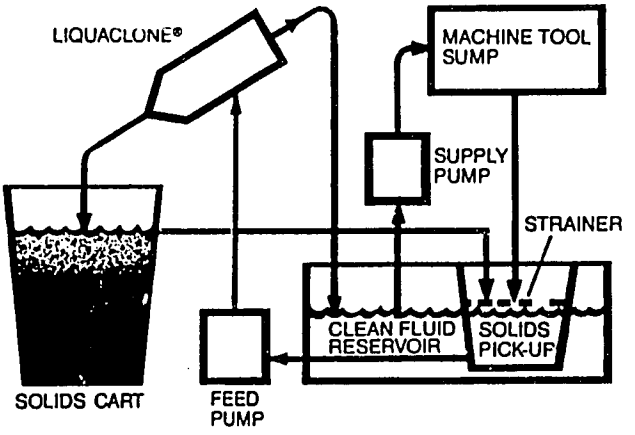

Clean tank, supply pump and associated pumping are standard on BLN and GRS models.

How the Liquaclone® Clarifier Stage Works

Pump-fed pressurized inlet flow creates a descending spiral of increasing velocity which in turn generates a rising vortex of centrifugally clarified liquid.

Solids drop out at bottom nozzle; clean liquid is forced out through top of Liquaclone® to clean reservoir. Liquaclone® removes 98% of the solids to 15 micron size and larger.

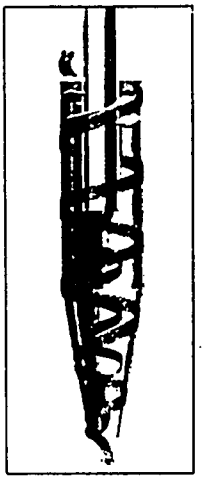

CONDENSED SPECIFICATIONS

MODELS	MAX CLEAN OUTPUT (GPM)	CLEAN RESER-VOIR (GALS)	RETURN TO PROD. SUMP	DATA SHEET NO.
LFP 60/4	50	–	opt	1700 313
LFP 100/6	85	–	opt	1700 314
LFP 200/12	170	–	opt	1700 315
LFP 300/19	225	–	opt	1700 316
BCN 60/4	50	125	std	1700 305
BCN 100/6	8	225	std	1700 306
BCN 200/12	170	400	std	1700 307
BCN 300/19	225	625	std	1700 308
TCP 60	45	–	opt	1700 317
TCP 100	75	–	opt	1700 318
TCP 300	200	–	opt	1700 320
GRS 60	45	125	std	1700 309
GRS 100	75	225	std	1700 310
GRS 300	200	625	std	1700 312

SOLIDS CART CAPACITY, all models: 100 gallons.

FEED PUMPS, all models: long coupled.

SUPPLY PUMPS, (BLN, GRS): vertical immersed.

LIQUACLONE® Series

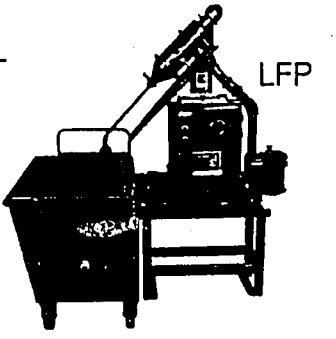

LFP
Four models in flow rates from 60 GPM to 300 GPM.

BLN
Similar to LFP plus clean liquid reservoir and supply pump for return of clarified liquid to production machinery.

TCP
Similar to LFP with added stage for "steel wool" removal.

GRS
Similar to BLN with added stage for removal of "steel wool".

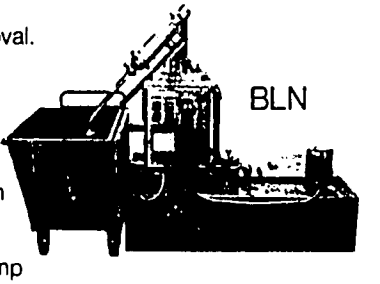

All models feature return of solids cart overflow to dirty fluid tank, and check valves to prevent feed pump from running dry.

Sanborn/Donaldson Liquaclone® clarifiers offer easily installed, extremely low maintenance systems for new and retrofit applications.

SANBORN/DONALDSON
Leaders in Separation Technology

25 Commercial Drive • Wrentham • MA • 02093
1-800-343-3381 617/384-3181
FAX 617/384-5346
TELEX 910-380-9466

A Division of SANBORN INC

107

PATRIOT SYSTEMS

for batch recovery of medium-high fluid volumes

The PATRIOT

PATRIOT Recovery Systems are **SANBORN**'s most versatile units, designed for plants with a broad range of medium to high volume fluid usage. A self-cleaning centrifugal separator ensures the highest operating rate and minimal maintenance. Patriots are available with their own dirty and clean fluids storage tanks, with separate pairs of tanks available for purifying multiple fluids on a segregated basis. Fluids may either be piped directly from machine sumps or carted to the system. A standard two-tank system requires less than 60 square feet of floor space including tankage. Patriots have a range of processing rates up to 2100 gallons per hour of coolant and up to 3360 gallons per hour of oil. Varying capacity options and sophisticated microprocessor controls allow them to provide economical recovery in plants with many different needs.

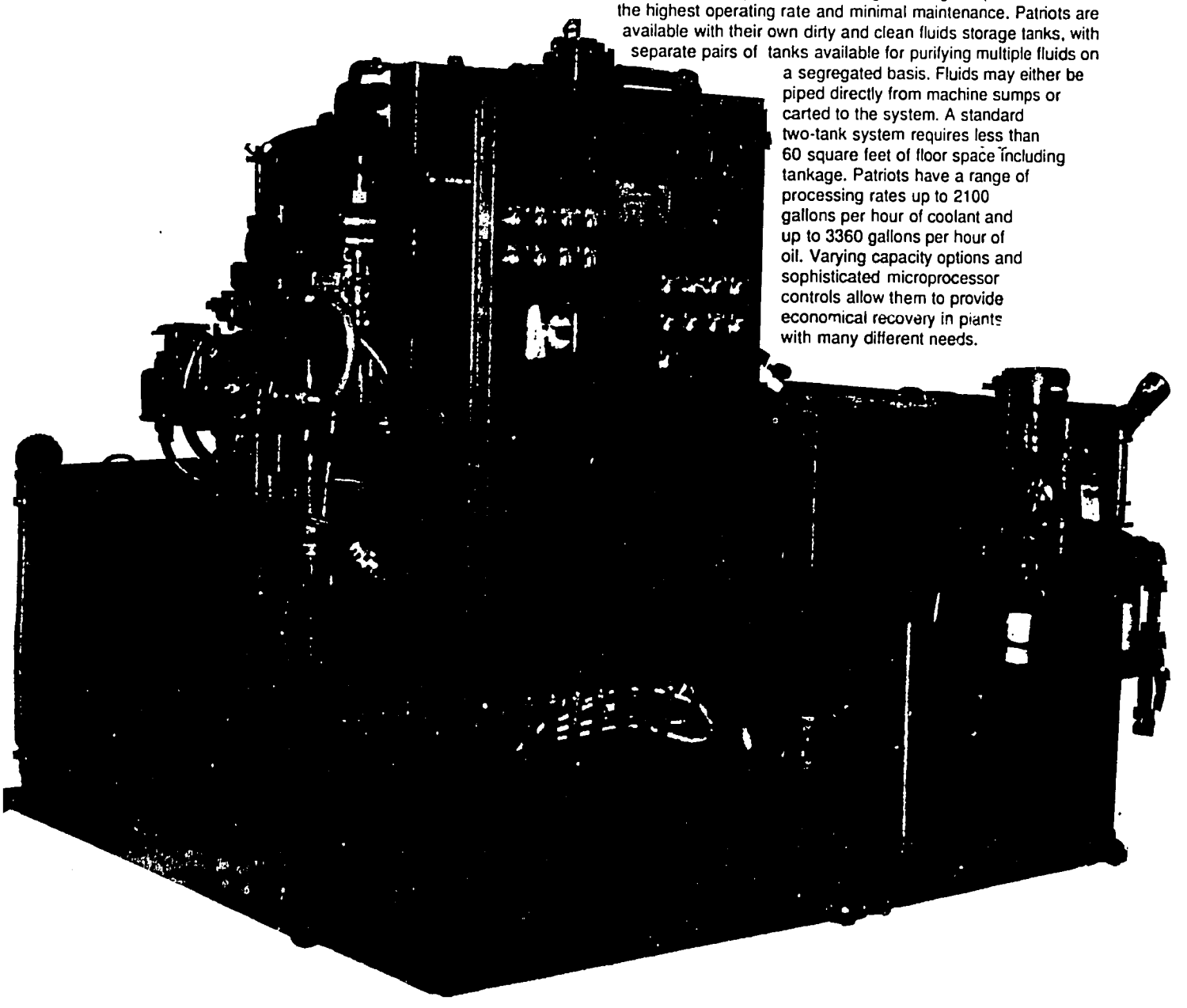

SANBORN

Leaders in Separation Technology

ENVIRONMENTAL SYSTEMS

PATRIOT SYSTEMS

For batch recovery of medium-high fluid volumes

Features:

Extremely High-Quality Purification

- Removes metallic fines and other solids down to one micron.
- Separates tramp fluids down to one quarter of one percent (.0025) or less.
- Reduces bacteria, fungi, and mold to levels of freshly mixed coolant.

Versatile Plant-wide Application

- Processes any make or type of coolant or oil.
- Single system serves multiple formulations.
- Works effectively on hydraulic oils, quench oils, and rolling oils.

Simple and Efficient Operation

- Fast, single-pass processing returns completely purified liquid.
- Automatic control system allows unattended operation.
- Systems delivered prepiped, prewired, and pretested.

Benefits:

Dramatic Direct Cost Savings

- Reduce fluid waste disposal costs up to 99%.
- Reduce new fluid purchases 80–95%.
- Reduce use of costly chemical biocides 90%.

Improved Quality and Productivity

- Cut machine downtime for sump cleanouts.
- Improve tool efficiency and product quality.
- Reduce worker dematitis, toxic biocide exposure.

Important Environmental Benefits

- Reduce liability for manifesting, storing dirty fluids.
- Meet tightening discharge standards for oily wastes.
- Eliminate potential liability for offsite environmental damage.

PATRIOT TECHNICAL INFORMATION

Patriot Operation Summary

1. Contaminated coolant or oil is pumped into a ***dirty fluid tank.*** Standard, all steel tank capacity is 500 gallons, with high-level shut-off control and sloping bottom for efficient drainage.
2. A ***stainless steel basket strainer*** provides pre-separation of coarse solids.
3. An intermediate stage solids separation is done using a ***hydrocyclone*** for coolant and a ***combination strainer and reusable media filter*** for oil. Each limits particle size to less than 30 microns. In the coolant system the hydrocyclone effluent is directed back to the dirty coolant tank for reprocessing.
4. A thermostatically-controlled ***low-watt density heater*** flash pasteurizes coolant for control of bacteria, fungi, and mold. For both coolant and oil, temperature controls allow optimal heating to lower viscosity for maximum separation efficiency in the centrifuge. A heat exchanger transfers heat from discharging clean fluid to incoming dirty fluid, minimizing energy usage and accelerating cool-down of pasteurized coolant.

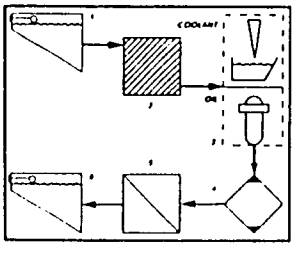

5. A ***high-speed disc centrifuge*** accomplishes a highly efficient liquid/liquid/solid separation. Lighter phase oils are separated from heavier phase water, and fine solids from each, without any split of coolant emulsions. Solids are automatically ejected at preset intervals, eliminating the need for regular bowl cleaning. Tramp fluids are discharged as desired.
6. Purified fluid is returned to a ***clean tank*** ready for re-use as new oil or coolant.

Controls:
System control automatically sequences and monitors flows and temperature, allowing unattended operation.

System Components

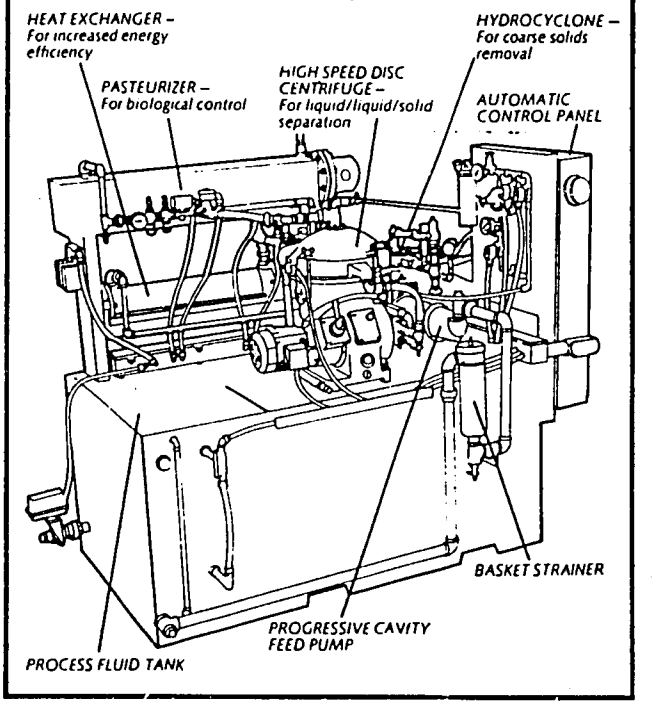

General Specifications

Patriot Recovery Systems are skid or tank mounted, prepiped, and wired to machine tool codes. All motors are TEFC; all gauges liquid-filled.

Dimensions	Length—9 ft. (480.2 cm) Width—7 ft. (213.4 cm) Height—5 ft. (152.4 cm)
Weight	2500 lbs. (1134 kg.)
Fluid Input	
—coolant	Any coolant up to 2.0% solids
—oil	Any oil up to 2.0% solids
Processing Rate	
—coolant	up to 2100 gal. (7950 liters) per hour
—oil	up to 3360 gal. (12,718 liters) per hour
Utility Requirements	Electrical—460 VAC, 3PH, 60 HZ Water—50 psig.min., 5 gpm
Control and Indicating Panel	NEMA 12 enclosure. Solid state programmable control including: audible/visible alarms, automatic/manual mode selector

SANBORN
Leaders in Separation Technology
ENVIRONMENTAL SYSTEMS
25 Commercial Drive
Wrentham, MA 02093
508/384-3181 • 800/343-3381
Fax: 508/384-5346

109

ULTRAFILTRATION SYSTEMS

UF 500 • UF 1000 • UF 1500 • UF 2000

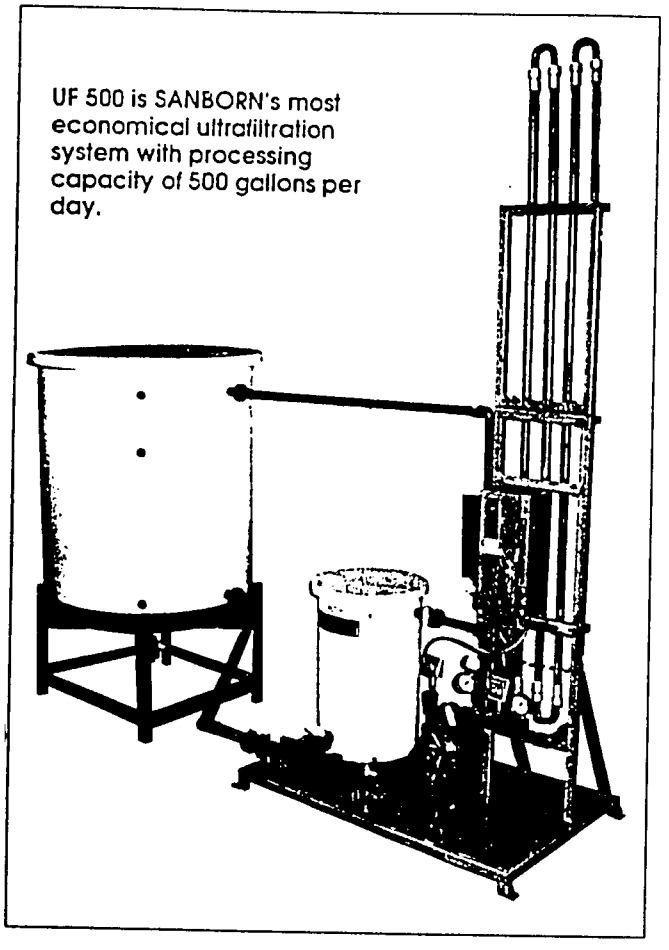

UF 500 is SANBORN's most economical ultrafiltration system with processing capacity of 500 gallons per day.

- **UF 1000** adds four additional membrane modules and has a processing capacity of up to 1000 GPD.
- **UF 1500**, with twelve modules and a 100 gallon clean tank.
- **UF 2000**, with 16 membrane modules that process up to 2000 GPD.

Ultrafiltration Systems are SANBORN's solution to oily wastewater disposal problems. Designed for applications where the waste volumes are between 200 and 3000 gallons per day (GPD), these economical units allow for simple, continuous operation with a minimum of operator involvement.

SANBORN Ultrafiltration Systems employ membrane technology to separate solids and reduce oily wastes by as much as 98% without the use of chemical additives. In most cases, ultrafiltration provides a directly sewerable effluent and dramatically reduced waste disposal costs.

Units are shipped pre-piped and pre-wired for easy installation and, once installed, require only a minimum amount of energy for continuous operation.

SANBORN's Service Engineering Department and Laboratory facilities are available to solve specific fluid problems, assist in installation, train operators and provide maintenance recommendations.

Primary applications for SANBORN Ultrafiltration Systems include METALWORKING COOLANTS, and MANUFACTURING OILY WASTES, to reduce disposal and hauling costs by 98% while efficiently removing oils and solids, and some hazardous wastes used in metalworking parts washers and floor washings.

SANBORN Ultrafiltration Systems eliminate treatment chemicals, lowers labor costs, provides a positive barrier keeping pollutants out of the environment and providing a consistent quality effluent.

Other applications include :

- ***VIBRATORY and BURNISHING WASTES***
- ***TEXTILE CHEMICALS and WASTES***
- ***FOOD PROCESSING WASTES***
- ***CHEMICAL EMULSIONS, LATEX, PIGMENTS and CHEMICAL PROCESS BY-PRODUCTS***
- ***PRINTING INKS and STARCH WASHWATER***

SANBORN
Leaders in Separation Technology
ENVIRONMENTAL SYSTEMS

ULTRAFILTRATION SYSTEMS

FEATURES

Simple and Efficient Operation

High Quality Purification

Versatile Application

- High Tech polymetric membrane is highly insensitive to chemical and concentration changes in the waste feed system
- High solids loading allows for a variety of processing applications
- Systems operate in continuous or batch process mode
- Skid-mounted units install easily anywhere in the plant
- Units require only 36 - 48 square feet of floor space

BENEFITS

Direct Cost Savings

- Lower waste volume saves disposal costs
- Simple operation saves labor costs
- Extremely low operating costs

Environmental Benefits

- Consistent effluent quality provides discharges within compliance
- Lower waste volumes reduce liability documentation
- Low pressure, non-chemical system provides safe working environment

Valuable Time Savings

- Unattended operation and limited maintenance requires few man-hours
- Save time by storing and hauling away less waste-water

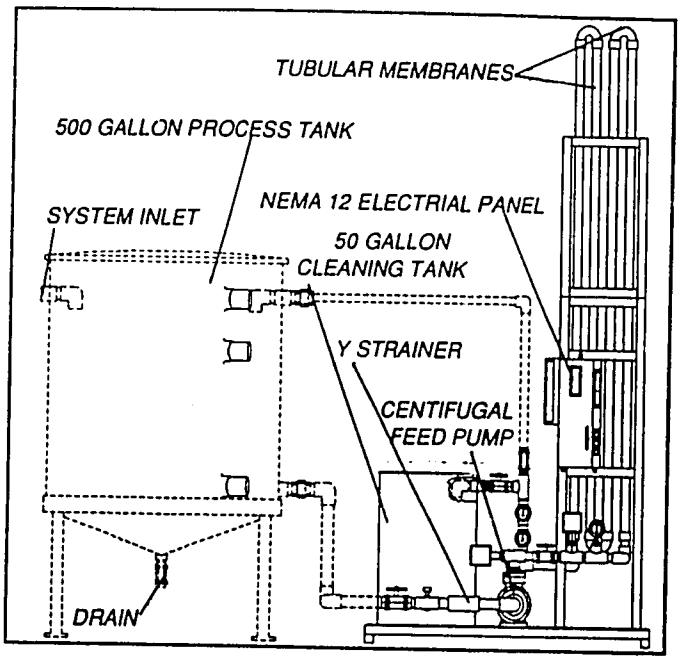

UF Operation Summary

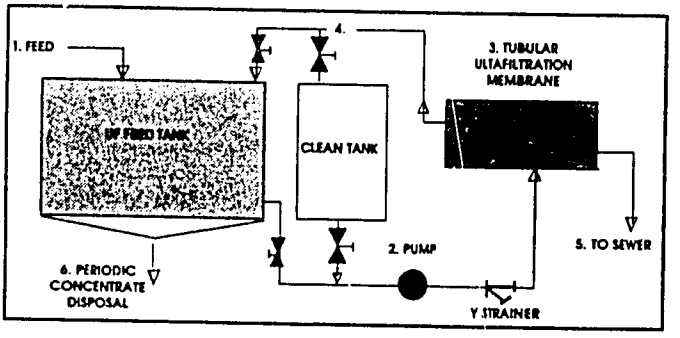

1. Waste water enters the process tank, where large particles settle and waste equalizes.

2. Wastewater is pumped through a strainer which removes coarse solid materials.

3. The liquid is continuously pressure driven across the semi-permeable UF membrane.

4. Waste materials rejected by the membranes are recycled back to the process tank.

5. Clean water is continuously discharged from the system.

6. Concentrated waste is periodically removed for disposal.

Condensed Specifications

MODEL	500	1000	1500	2000
Volume processed (GPD)	500	1000	1500	2000
Process Tank (gals) (optional)	500	500	1000	1000
Cleaning Tank (gals)	50	50	100	100
Number of Modules	4	8	12	16
Pump (GPM)	50	100	150	200
Motor HP	5	7.5	10	15
Amp Draw @ 460 v	7.5	11.0	14.0	21
Dimensions* : Length	140 in.	140 in.	160 in.	160 in.
Width	54 in.	54 in.	66 in.	66 in.
Height	137 in.	137 in.	137 in.	137 in.
Weight	1000 lbs.	1100 lbs.	1300 lbs.	1400 lbs.

General Specifications:

pH 2-12
Temp. 120 degrees F (max)
Water Standard Tap (Cleaning Tank Supply)

*** Optional Process Tank included.**

UF systems are skid mounted, pre-piped and wired to machine tool codes. All motors are TEFC: all gauges are liquid-filled.

SANBORN
Leaders in Separation Technology
ENVIRONMENTAL SYSTEMS
25 Commercial Drive
Wrentham, MA 02093
508/384-3181
1-800-343-3381
FAX: 508/384-5346

PUFS-E®

Portable Ultrafiltration System

The Cost Saving Solution To Small and Medium-sized Shop's Oily Wastewater Disposal

PUFS-E Portable Ultrafiltration System is a self-contained portable membrane system for the separation and reduction of oily wastewater by as much as 98%. The PUFS-E eliminates up to 98% of the water in an oily wastewater mixture lowering cleanup and disposal costs for machining and grinding coolants, air compressor blow-down and oily wastewater from parts washers.

Operating on top of its own 55 gallon tank, the new PUFS-E can process up to 100 gallons in twenty-four hours, separating oily wastewater into an oil-free "permeate" and an oily "concentrate".

With an engineering design based on proven technology, and over two years field experience, Sanborn's new PUFS-E is simple to operate and maintain. The portable membrane unit is driven by a reliable, heavy duty Wilden air diaphragm pump. The new clean-in-place design allows for reduced handling, set-up and maintenance time while increasing employee safety. The new PUFS-E is operated and stored on top of its own tank.

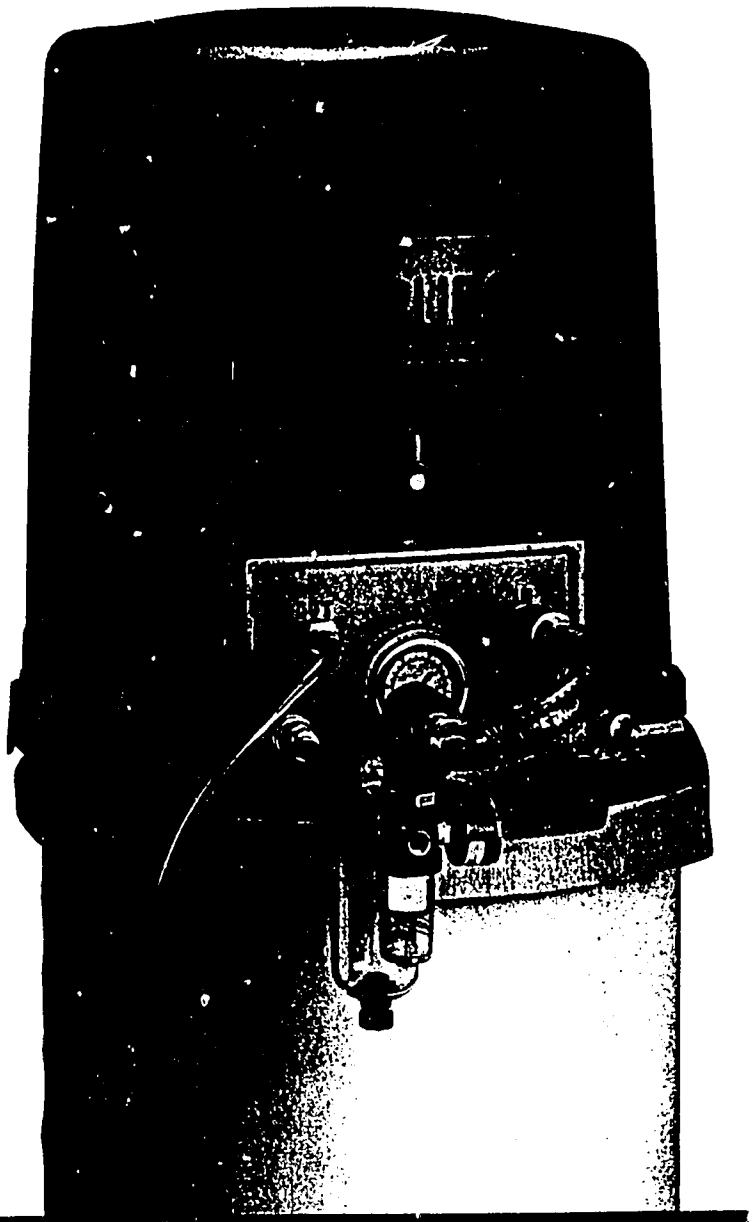

PUFS-E®
Portable Ultrafiltration System

SANBORN
Leaders in Separation Technology
ENVIRONMENTAL SYSTEMS
25 Commercial Drive • Wrentham, MA 02093
1-(508)-384-3181

112

PUFS-E®

Portable Ultrafiltration System

PUFS-E is a portable ultrafiltration system specifically designed for use in small to medium sized plants which produce 2000 gallons or less of oily wastewater per month. PUFS-E operates on top of its own 55 gallon tank designed to allow the operator to visually inspect the process by observing the waste fluids in the tank.

Driven by a heavy-duty, aluminum Wilden air pump, the PUFS-E will reduce diposable waste volume by as much as 90% by separating oily wastewater into a clean liquid permeate containing no solids, oil or grease and the by-product concentrate of the remaining soil. Also, the PUFS-E will significantly reduce BOD and COD levels, resulting in a permeate which is usually suitable for sewer disposal. The remaining concentrate and solids, which typically represent only 2% of the original wastewater volume, are drained from the bottom of the process tank.

How PUFS-E Works

PUFS-E is automated and simple to operate. The unit can be installed in minutes and requires no floculating chemicals or intensive training.

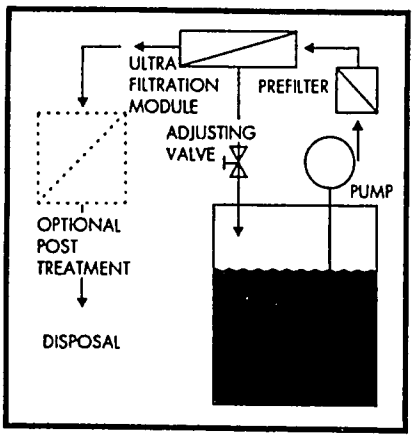

PUFS-E includes its own monitoring/ process tank and suction discharge pipes. The PUFS-E heavy-duty, diaphragm pump, driven by an 80 psi air supply, draws the oily wastewater through the suction pipe and strainer into a cartridge pre-filter which removes sludge and coarse solid materials. The wastewater then flows into the membrane module. The pressure-driven feed stream creates separate streams across the porous membrane, where high process velocities prevent the membrane from caking or plugging up. Smaller water molecules pass through the membrane becoming permeate. Larger oil and grease molecules become the concentrate and return to the process tank. At the end of the cycling process, the concentrated waste is removed from the tank.

Composition of the permeate and local regulations may require the permeate to be pumped across adsorption and ion exchange columns to further purify the water prior to sewer disposal. If such post treatment is necessary, Sanborn Inc. offers a complete line of optional post treatment accessories.

Ease Of Operation and Maintenance

The PUFS-E design, including clean-in-place features, provides high process disposal rates and ease of maintenance. The process tank allows for easy disposal of the concentrate by-product. These features result in increased flexibility, ease and safety in maintaining the system. The process tank permits visual inspection of the waste, and the settling of solids before operation, resulting in reduced prefiltration, and longer membrane life. These new improvements increase process and maintenance efficiency meeting the needs of today's plant operations.

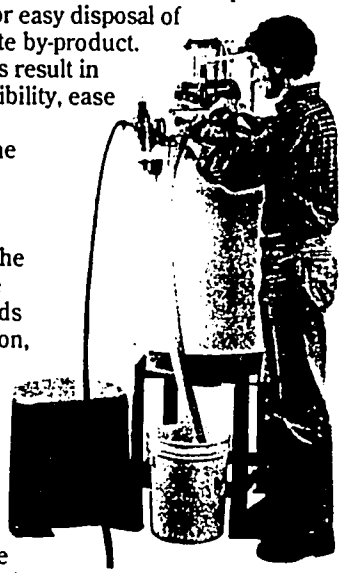

PUFS-E Specifications

Process Rate: Up to 100 gallons in 24 hours.
Dimensions: 26" dia/26" Ht.
Weight: 75lbs.
Air: 80 psi
pH Range: 4-10
Maximum initial oil concentration of 10% will produce an 80% volume reduction. Oil concentration cannot exceed 50% to operate.

U.S. Patent Number 4,929,351

The Model 500 Ultrafiltration System

For applications where oily wastewater and manufacturing oily waste volumes are up to 500 gallons per day, Sanborn offers the Model 500 Ultrafiltration System. The UF500 is a heavy-duty industrial system, with a 500 gallon process tank and a built-in cleaning system. The unit operates on three-phase electrical power, and has a complete set of controls and safety devices. Applications include: metalworking coolants, manufacturing oily wastes, such as metalworking parts and floor washings, vibratory finishing wastes, latex, printing inks, chemical emulsions, textile chemicals and food processing wastes.

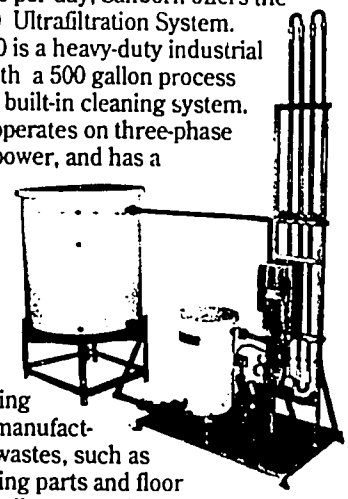

Sanborn Quality, Technical Service & Support

Sanborn Inc. a leader in providing cost-effective solutions for industry's fluid needs, is your single source for separation and disposal systems, service and support. We manufacture a full product line of standard and customized UF systems. We offer technical and applications engineering support and laboratory facilities to solve specific fluid problems to specify the right system for your needs. Sanborn also supplies replacement parts. Simply contact your nearest dealer. He'll see that you get the exact part and service that you need, when you need it, and with technical assistance if needed.

SANBORN
Leaders in Separation Technology
ENVIRONMENTAL SYSTEMS

25 Commercial Drive • Wrentham, MA 02093
1-(508)-384-3181
FAX 1-(508) 384-5346

PUFS-E®
Portable Ultrafiltration System

For more information call toll free 1-800-343-3381

113

PURITAN SYSTEMS

For low-cost recovery of small fluid volume.

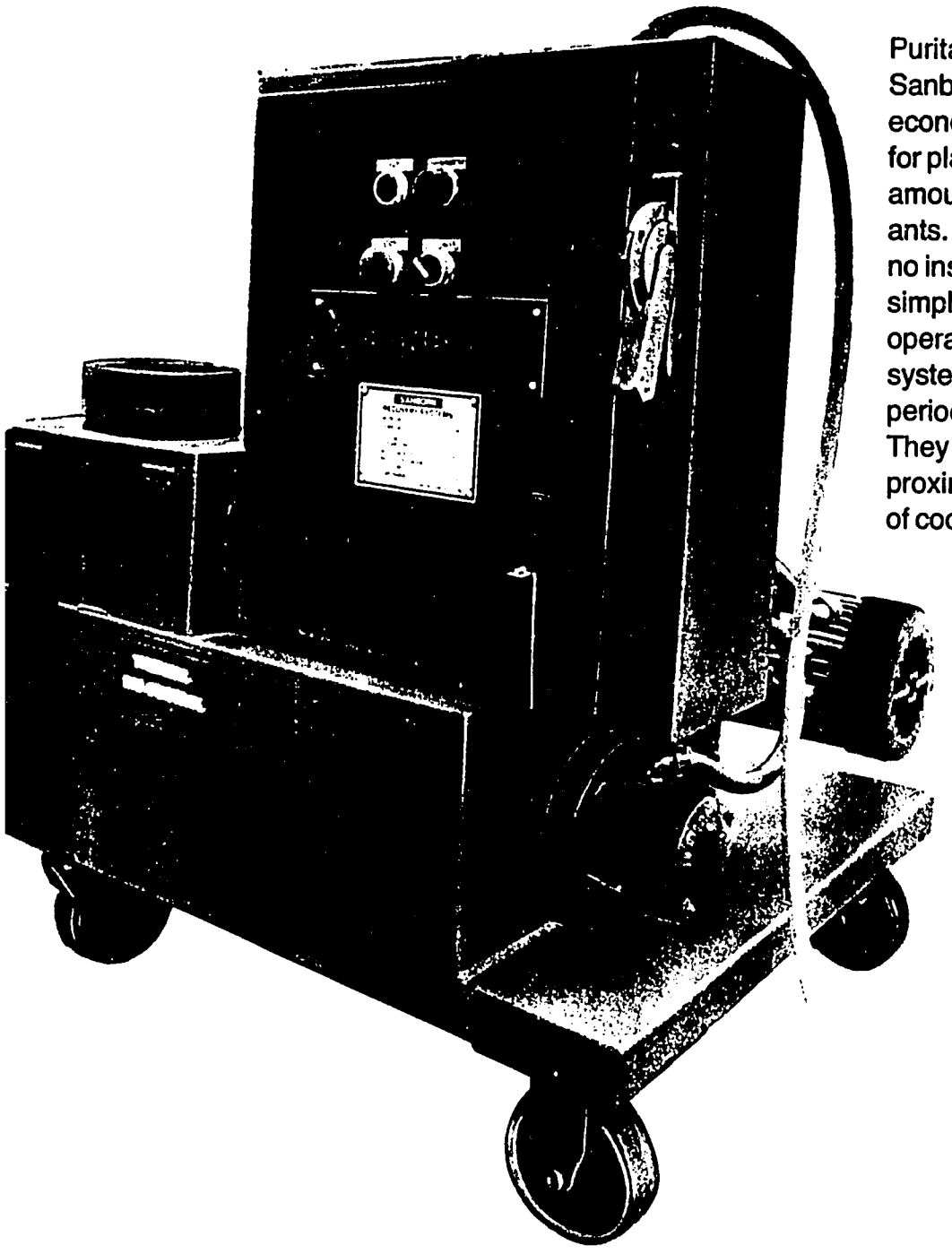

Puritan Recovery Systems are Sanborn's smallest and most economical systems, designed for plants with relatively small amounts of waste oils or coolants. Puritans involve virtually no installation cost and are the simplest possible systems to operate. Unlike Sanborn's larger systems, Puritans require periodic manual bowl cleaning. They are capable of purifying approximately 90 gallons per hour of coolant and 120 GPH of oil.

Puritans require less than 9 square feet of floor space. They are available as portable skid mounted units. One machine can easily serve multiple machine tools located anywhere in the plant.

SANBORN
Leaders in Separation Technology
ENVIRONMENTAL SYSTEMS

PURITAN SYSTEMS

For low-cost recovery of small fluid volume.

Features:

Extremely High-Quality Purification

- Removes metallic fines and other solids down to one micron.
- Separates tramp fluids down to one quarter of one percent (.0025).
- Reduces bacteria, fungi and mold to levels of freshly mixed coolant.

Versatile Plantwide Application

- Single system serves multiple formulations.
- Works effectively on hydraulic oils, quench oils, and rolling oils.
- Processes any make or type of coolant or oil.

Simple and Efficient Operation

- Fast, single-pass processing returns completely purified fluid.
- Systems delivered prepiped, prewired and pretested.

Benefits:

Dramatic Direct Cost Savings

- Reduce fluid waste disposal costs up to 99%.
- Reduce new fluid purchases 80–95%.
- Reduce use of costly chemical biocides 90%.

Improved Quality and Productivity

- Cut machine downtime for sump cleanouts.
- Improve tool efficiency and product quality.
- Reduce worker dermatitis, toxic biocide exposure.

Important Environmental Benefits

- Reduce liability for manifesting, storing dirty fluid.
- Meet tightening discharge standards for oily wastes.
- Eliminate potential liability for offsite environmental damage.

PURITAN TECHNICAL INFORMATION

Puritan Operation Summary

1. Dirty fluid barrels, holding tanks, or fluid sumps hold contaminated coolant or oil for processing. Fifteen-foot hoses for suction and discharge are connected to the Puritan quick-disconnect fittings. Push-button start-up of the Puritan begins an initial circulation of the liquid.
2. Stainless steel mesh basket provides pre-separation of coarse solids.
3. Low-watt density heater flash pasteurizes water-based fluid for control of bacteria, fungi and mold. Heat materially improves separation of tramp oil. When purifying oil based fluid, heater provides a range of temperature settings to control viscosity for optimum separation of fine solids and water. Heater is thermostatically controlled and protected from burn-out.
4. High-speed disc centrifuge accomplishes a liquid/liquid/solid separation, utilizing forces up to 9000 times gravity. Light-phase tramp fluids are discharged to a waste fluid container, fine solids are retained in the centrifuge bowl.

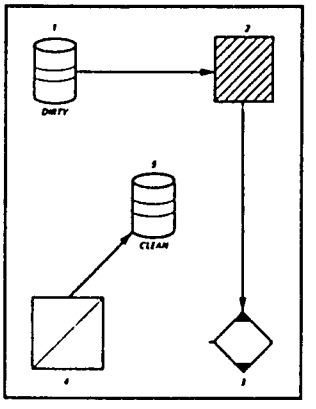

5. Highly purified heavy-phase fluid is returned to the clean barrel for process use.

Controls:
System control automatically monitors process flows and temperature.

System Components

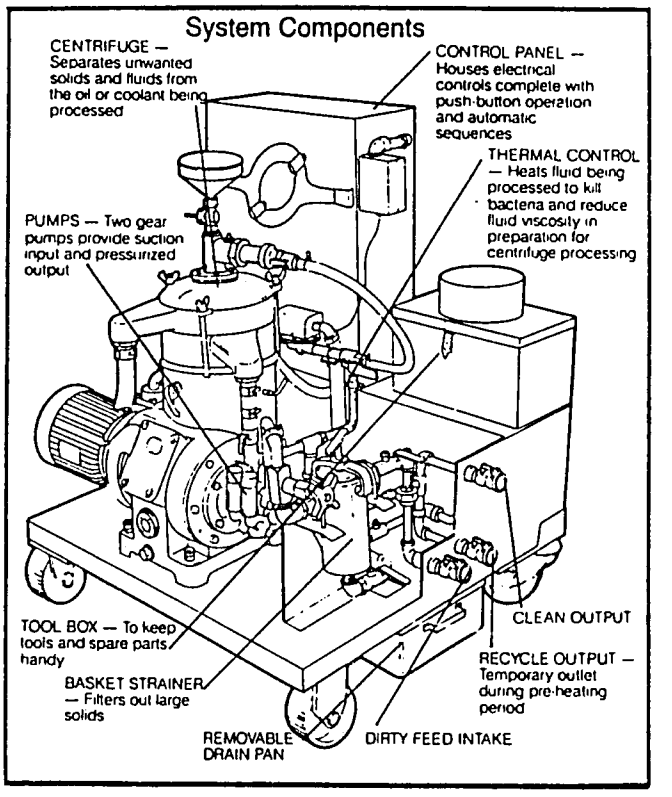

General Specifications

Puritan Recovery Systems are available skid-mounted with caster wheels, prepiped and wired to machine tool codes. All motors are TEFC.

Dimensions	34 inches (86cm) wide 39 inches (99cm) long 44 inches (111cm) high
Weight	550 pounds (250 kg)
Coolant Input	Any water-based coolant with up to 0.5% solids
Oil Input	Any oil with up to 0.5% solids
Processing Rate	
—Coolant	Up to 90 gallons (341 liters) per hour
—Oil	Up to 120 gallons (454 liters) per hour
Electrical Power Required	460 volt, 3 phase, 60-Hz (or as specified)
Control Panel	NEMA XII enclosure, relay logic, audible alarm

SANBORN
Leaders in Separation Technology
ENVIRONMENTAL SYSTEMS

25 Commercial Drive
Wrentham, MA 02093
508/384-3181 • 800/343-3381
Fax: 508/384-5346

115

PIONEER SYSTEMS

For on-line recovery from central fluid sumps.

Pioneer Recovery Systems are Sanborn/Donaldson's highest capacity units, designed for continuous on-line purification in plants with central fluid sumps. Pioneers utilize sophisticated microprocessor controls for unattended operation. A self-cleaning centrifugal separator ensures the highest operating rates and minimal maintenance. One machine is capable of processing approximately 2100 gallons per hour of oil or coolant, on sumps up to 100,000 gallons.

The entire Pioneer system takes less than 50 square feet of floor space. Skid mounted, a Pioneer requires only power and utilities hook-up and a bypass loop connection to the fluid sump to begin operation.

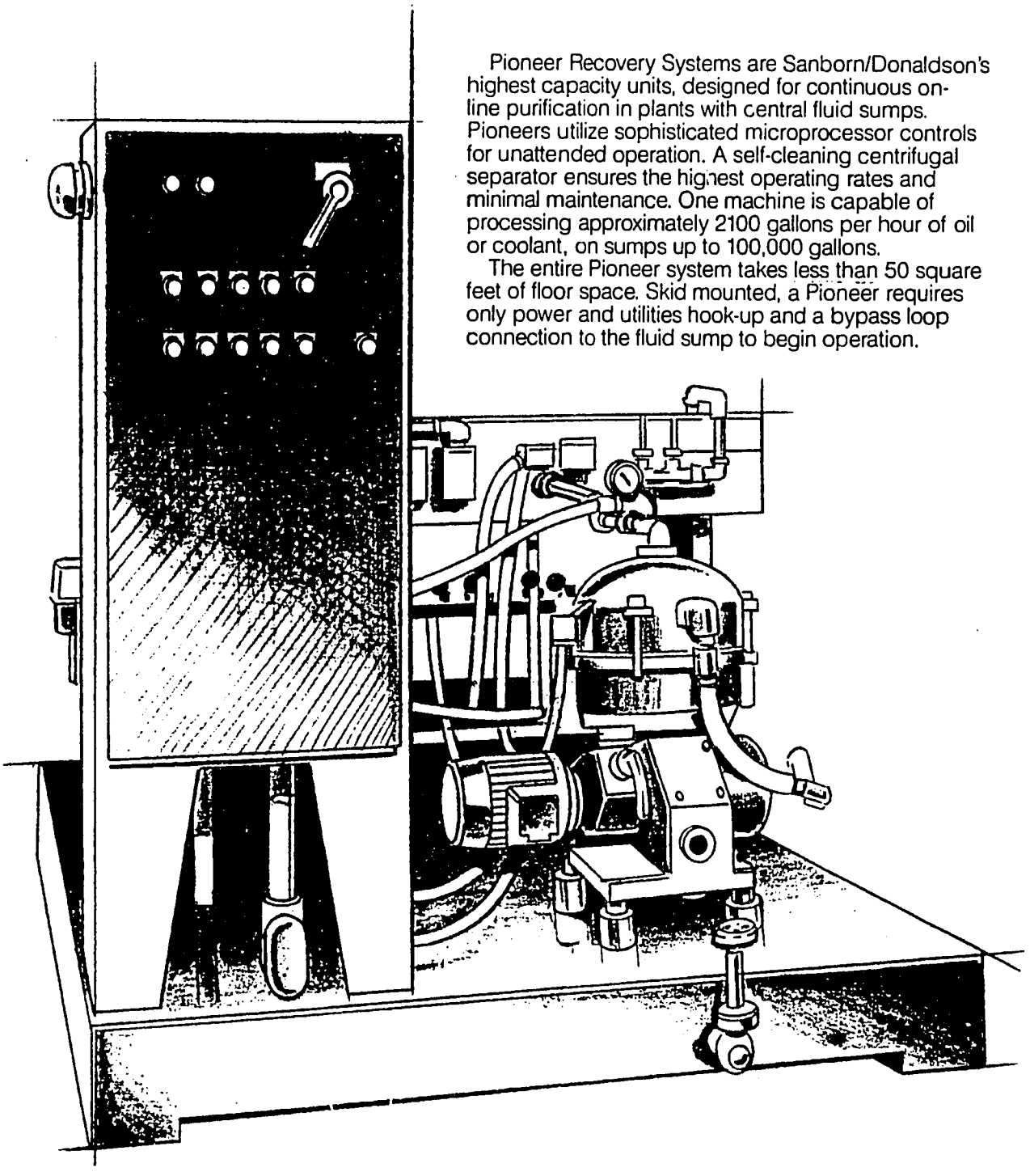

SANBORN/DONALDSON
Leaders in Separation Technology

PIONEER SYSTEMS

For on-line recovery from central fluid sumps.

Features:

Extremely High-Quality Purification

- Removes metallic fines and other solids down to one micron.
- Separates tramp fluids down to one quarter of one percent (.0025).
- Reduces bacteria, fungi and mold to levels of freshly mixed coolant.

Versatile Plantwide Application

- Single system serves multiple formulations.
- Works effectively on hydraulic oils, quench oils, and rolling oils.
- Processes any make or type of coolant or oil.

Simple and Efficient Operation

- Fast, single-pass processing returns completely purified fluid.
- Systems delivered prepiped, prewired and pretested.

Benefits:

Dramatic Direct Cost Savings

- Reduce fluid waste disposal costs up to 99%.
- Reduce new fluid purchases 80-95%.
- Reduce use of costly chemical biocides 90%.

Improved Quality and Productivity

- Cut machine downtime for sump cleanouts.
- Improve tool efficiency and product quality.
- Reduce worker dermatitis, toxic biocide exposure.

Important Environmental Benefits

- Reduce liability for manifesting, storing dirty fluid.
- Meet tightening discharge standards for oily wastes.
- Eliminate potential liability for offsite environmental damage.

PIONEER TECHNICAL INFORMATION

Pioneer Operation Summary

1. A continuous central sump bypass loop provides inflow to the recovery system.
2. A stainless steel basket strainer provides pre-separation of coarse solids.
3. An intermediate stage solids separation is done using a hydrocyclone for coolant or combination strainer and reuseable media filter for oil. Each limits particle size to less than 30 microns. In the coolant system, the hydrocyclone effluent is directed back to the dirty coolant tank for reprocessing.
4. A thermostatically controlled low-watt density heater flash pasteurizes coolant for control of bacteria, fungi, and mold. For both coolant and oil, temperature controls allow optimal heating to lower viscosity for maximum separation efficiency in the centrifuge. A heat exchanger transfers heat from discharging clean fluid to incoming dirty fluid, minimizing energy usage and accelerating cool-down of pasteurized coolant.

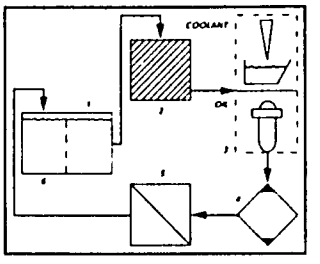

5. A high-speed disc centrifuge accomplishes a highly efficient liquid/liquid/solid separation. Lighter phase oils are separated from heavier phase water, and fine solids from each, without any split of coolant emulsions. Solids are automatically ejected at preset intervals, eliminating the need for regular bowl cleanings.
6. Purified fluid is returned via the bypass loop to the central sump ready for reuse as new oil or coolant. Tramp fluids are discharged as desired.

Controls: System control automatically sequences and monitors process flows and temperature, allowing unattended operation.

System Components

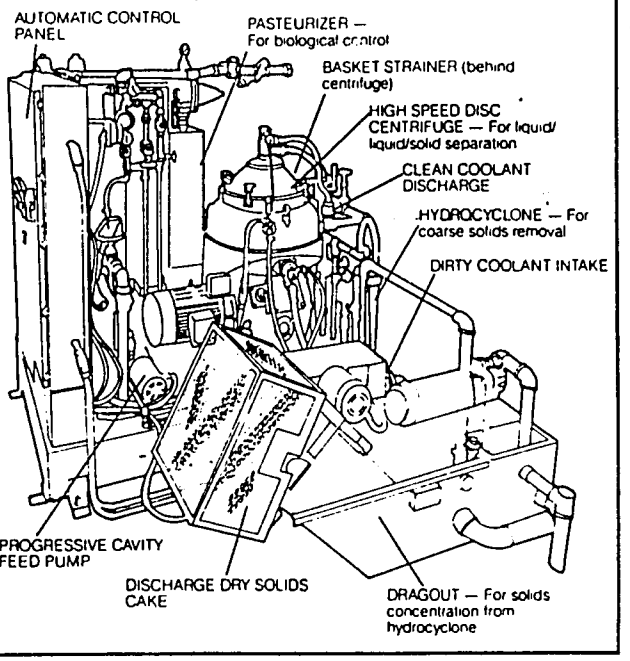

General Specifications

Pioneer Recovery Systems are skid mounted, pre-piped and wired to machine tool codes. All motors are TEFC; all gauges liquid-filled.

Dimensions	Length: 7 ft. (213.4 cm) Width: 7 ft. (213.4 cm) Height: 5 ft. (152.4 cm)
Weight	2500 lbs. (1134 kg)
Fluid Input:	
—coolant	Any coolant up to 2.0% solids
—oil	Any oil up to 2.0% solids
Processing Rate:	
—coolant	Up to 2100 gal. (7950 liters) per hour
—oil	Up to 3360 gal. (12,718 liters) per hour
Utility Requirements:	Electrical—460 VAC, 3 PH, 60 HZ Steam—15 psig., 1500 lb./hr. water, 50 psi. min., 5 gpm nominal
Control and Indicating Panel:	NEMA XII enclosure. Relay logic or solid state programmable control including: Push-to-test indicators, audible/visible alarms, automatic/manual mode selector

SANBORN/DONALDSON
Leaders in Separation Technology

25 Commercial Drive • Wrentham • MA • 02093
1-800-343-3381 617/384-3181
FAX 617/384-5346
TELEX 910-380-9466

A Division of SANBORN INC

117

H. A. WILSON COMPANY
Manufacturers' Representatives
P.O. Box 252 Lexington, MA 02173
(617) 861-8000

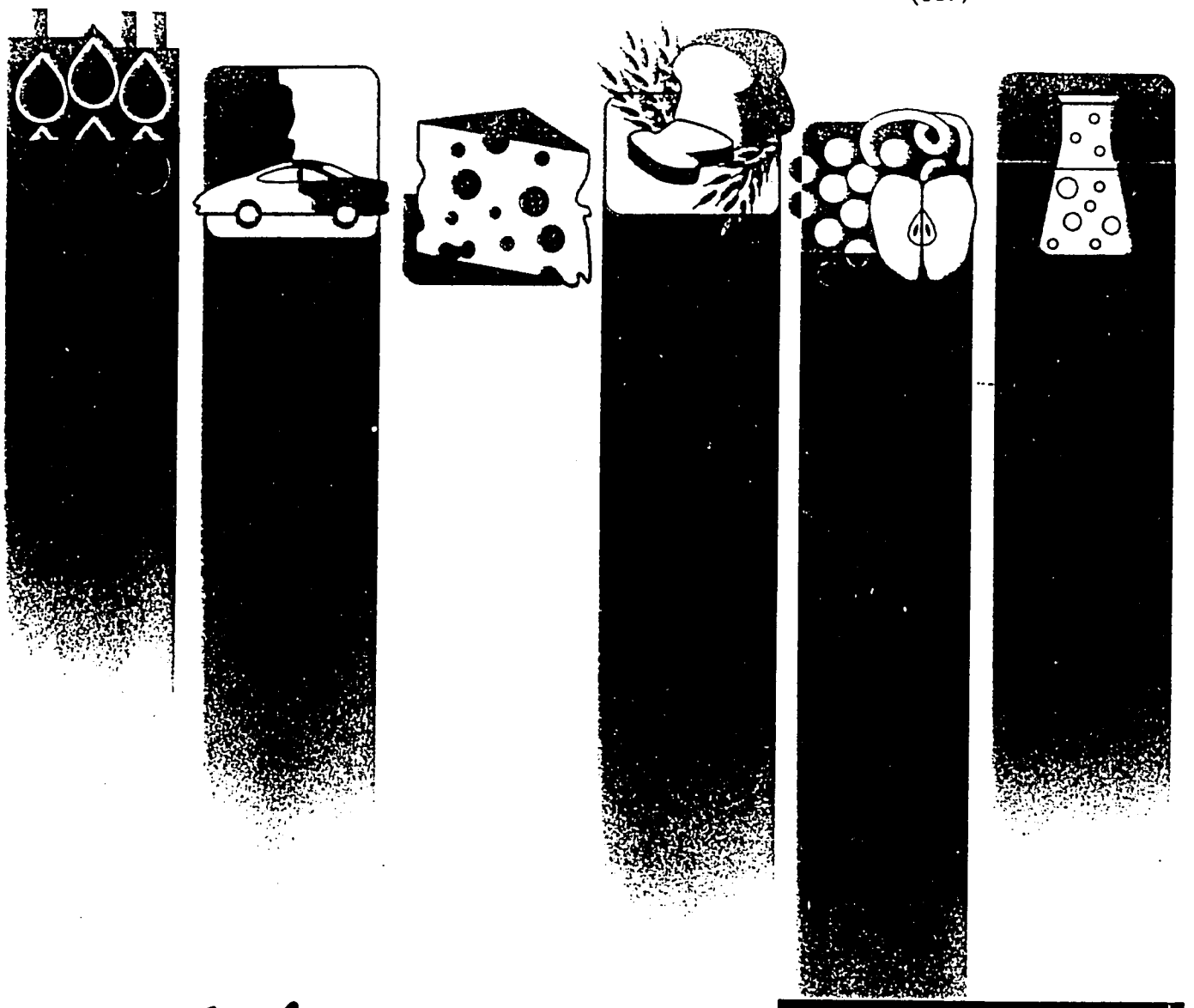

Solutions in Wastewater Treatment

KOCH

KOCH MEMBRANE SYSTEMS INC

Abcor®

118

Meeting Discharge Limits

Diverse industrial sources generate billions of gallons of wastewater every day, much of which is a major pollution problem. Increasingly strict environmental legislation requires industry to clean up wastewater before discharge, creating the need for effective methods of treating industrial wastewater to comply with discharge limits. Koch Membrane Systems offers efficient, reliable ultrafiltration (UF) systems for satisfying a variety of demanding wastewater applications, in some cases enabling recovery of valuable materials for re-use.

KOCH MEMBRANE SYSTEMS:

COMPLETE CAPABILITIES IN WASTE TREATMENT

Koch Membrane Systems offers high performance ultrafiltration systems for treating a variety of wastewater. Koch UF systems provide effective waste treatment or product recovery for industrial applications which include:

- General Metalworking
- Cutting and Grinding Fluids
- Primary Metals
- Alkaline Cleaners
- Food Processing
- Chemicals
- Printing
- Flexographic Ink
- Parts Washers
- Power Washers
- Waste Collection
- Can Making
- Air Compressor Blowdown Water
- Textiles
- Pulp and Paper
- Smoke Scrubber Water

The Koch UF-1200 RM system can process up to 176,800 gallons (670m³) per day, depending on the stream.

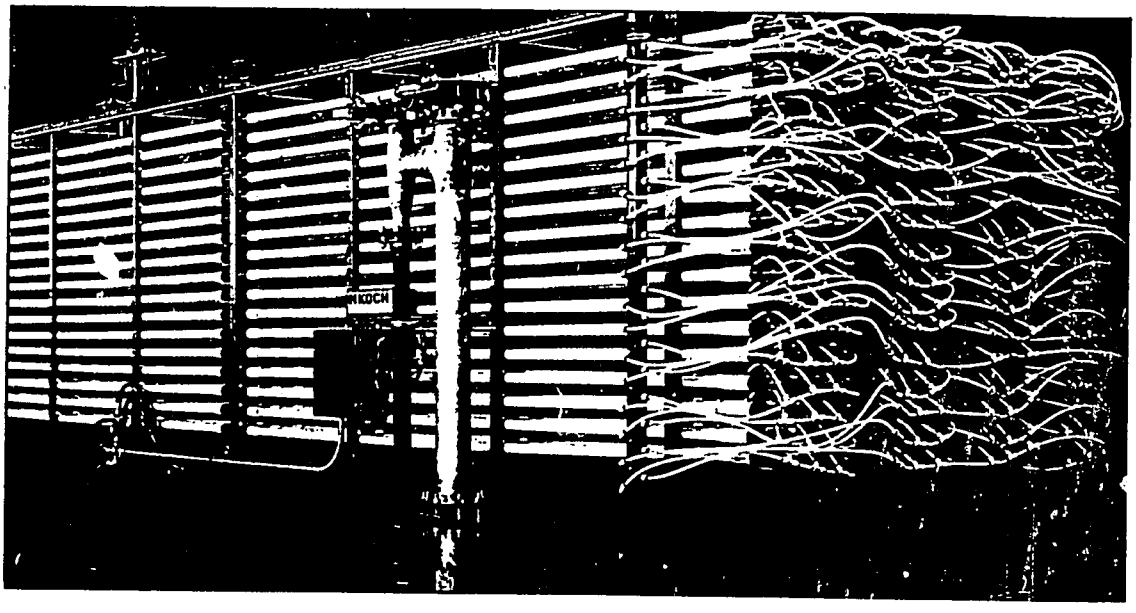

A TOTAL APPLICATION SOLUTION APPROACH Koch Membrane Systems offers a "total application solution" approach in which we analyze your waste stream, determine feasibility, pilot-test your stream, and then design and manufacture a full-scale system. We provide complete service and technical support from design concept through the life of your project, including installation, training, and maintenance contracts. Our waste treatment systems provide important benefits for industry, including:

- Greatly reduced waste disposal and hauling costs
- Automatic operation, requiring virtually no operator attention
- Low pressure operation for reduced energy costs
- Systems require no chemicals; customer avoids storage and mixing of chemicals
- Minimal pretreatment required
- Long membrane life

FEASIBILITY AND PILOT SYSTEMS After initial feasibility tests on wastewater samples, a pilot-scale system may be used to evaluate key process conditions and to establish operating parameters. Pilots are usually located at the customer site to be fully exposed to the actual waste stream and environment.

VARIABLE WASTE STREAMS In some applications, changes in process influent, manufacturing conditions, weather conditions, or other factors may ultimately affect the waste treatment process. Koch has experience dealing with day-to-day variations in plant operation for applications where waste streams fluctuate. In fact, such applications are particularly well-served by our extensive line of standard products, ranging from readily available off-the-shelf modules to "in-development" products that may be close to commercialization.

A SYSTEMS APPROACH TO PROCESS OPTIMIZATION

Koch takes a systems approach to every project, meaning we not only optimize all system components for the intended application, but we integrate them into a single unit that operates efficiently. Each system is designed and manufactured around Koch membrane modules, so every element of the installed system is matched to your process. Because Koch maintains total control over manufacturing, our systems provide maximum efficiency and reliability for each customer.

In addition, we stand firmly behind every system we supply, with full service and technical support. If your process changes, we can assist you in modifications as needed; and we offer 24-hour service because we understand the demands of your production schedule.

ULTRAFILTRATION SYSTEMS We supply a range of standard ultrafiltration (UF) systems that can be optimized to deliver high performance for virtually any industrial waste treatment or recovery application.

Koch UF systems effectively separate high molecular weight dissolved materials from the waste stream using Koch-manufactured semi-permeable membranes and modules. Water and low molecular weight solutes (for example, salts and some surfactants) are removed as permeate, while emulsified oil and suspended solids remain in the process and are removed as concentrate.

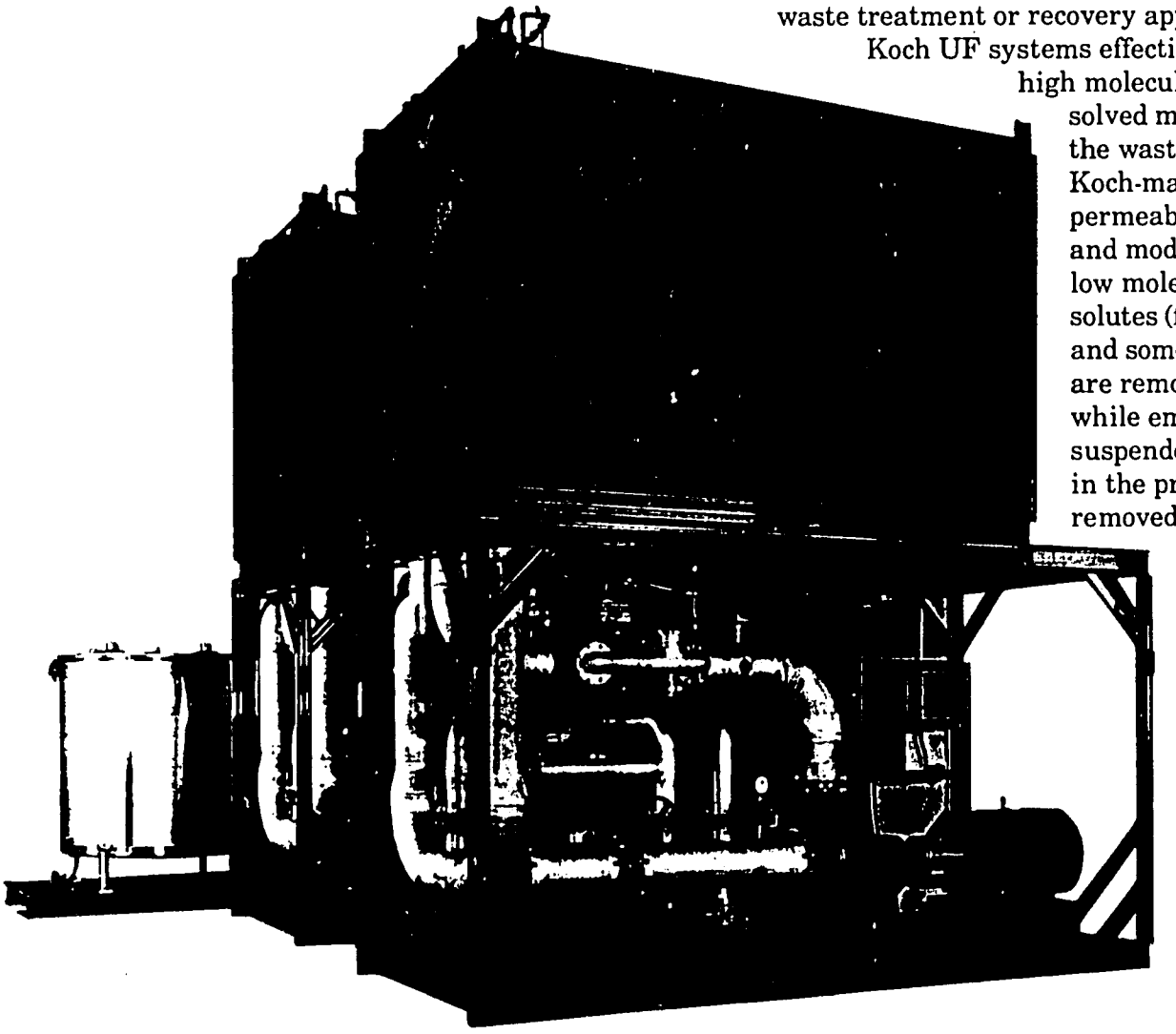

This twin UF-1200 system was designed and configured to specific customer requirements.

121

REVERSE OSMOSIS SYSTEMS Our many years of supplying industrial filtration systems includes substantial experience in reverse osmosis, used in selected applications in conjunction with ultrafiltration, as part of the overall treatment process. We will work closely with customers to provide a complete solution to treating their specific stream, and offer full capabilities in state-of-the-art reverse osmosis systems when necessary.

KOCH UF SYSTEMS PRODUCTIVITY

Daily Capacity Gallons Per Day (Cubic Meters Per Day)

Koch System	(1)	(2)	(3)
UF-4VA	130(0.5m³)	300(1.1m³)	650(2.5m³)
UF-9VA	250(1m³)	600(2.2m³)	1,300(5m³)
UF-18VA	500(2m³)	1,200(4.5m³)	2,600(10m³)
UF-18/36	1,000(4m³)	2,400(9m³)	5,200(20m³)
UF-70	2,000(7.5m³)	4,800(18m³)	10,400(39m³)
UF-158	4,500(17m³)	10,800(41m³)	23,400(88m³)
UF-264	7,500(29m³)	18,000(70m³)	38,900(147m³)
UF-388	11,000(42m³)	26,400(100m³)	57,200(216m³)
UF-545	15,500(59m³)	37,200(141m³)	80,600(305m³)
UF-776	22,000(83m³)	49,200(185m³)	114,400(433m³)
UF-1200 FEHM	34,000(129m³)	81,600(309m³)	176,800(670m³)
UF-1200 RM	34,000(129m³)	81,600(309m³)	176,800(670m³)

(1) Typical coolant oily waste high parts-per-million feed
(2) Chemical and low parts-per-million waste
(3) Fine particle separation (metal hydroxides, pigments)

SEMI-BATCH CONCENTRATION

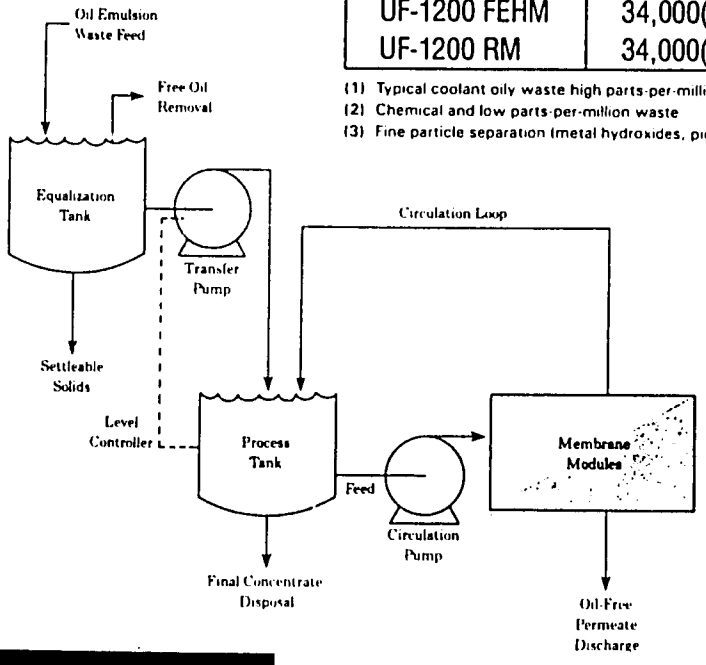

TYPICAL TREATMENT PROCESS In a typical waste treatment process, wastewater is collected in an equalization tank from which free-floating oil and settleable solids are removed. The remaining wastewater is transferred to a process tank to be pumped and recirculated through the membrane modules at about 65 psig (4.5 bar). In both batch or semi-batch processes, permeate will be discharged while wastewater continues to be concentrated. Most installations operate on a one-week cycle, at which time the process may be halted for cleaning.

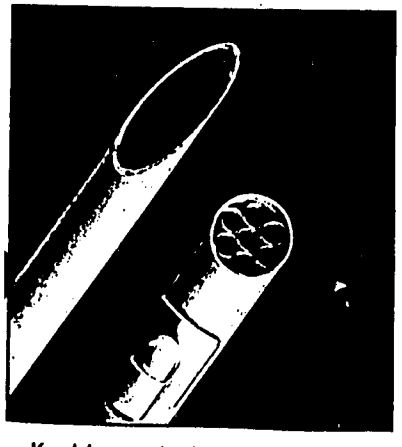

Koch's one-inch tubular module, left, and ULTRA-COR VII

DEVELOPMENTS IN THE 1-INCH TUBE Koch Membrane Systems pioneered the one-inch (2.54 cm) diameter tubular membrane, the preferred configuration for waste treatment because of its rugged design and chemical resistance. Our one-inch tube can be used in virtually any industrial application regardless of suspended solids levels, and easily withstands temperature and pH extremes. We have continued to develop and improve our one-inch tubular membrane to meet increasingly demanding industrial applications.

122

KROFTA®

OIL and GREASE REMOVAL FROM EFFLUENT

The **SUPRACELL, Type 8,** with outside tank in Epoxy painted Mild Steel and moving parts in 304 SS, is installed to process Wastewater from a stream near a large Midwest city, prior to the discharge into the Municipal Sewer .

The influent contains large quantities of oil and suspended solids from various industrial plants, including crankcase oils, oily sludges, gear oils etc. Up to 1 million gall. per month are acidulated (as required) dewatered, and used as fuel, for asphalt, etc. .

Wastewater is collected in a large oil separator (7 hours detention), and flows by gravity to a neutralization tank, flocculation tank, and the SUPRACELL

The recovered floated sludge is taken directly back to the recovery process.

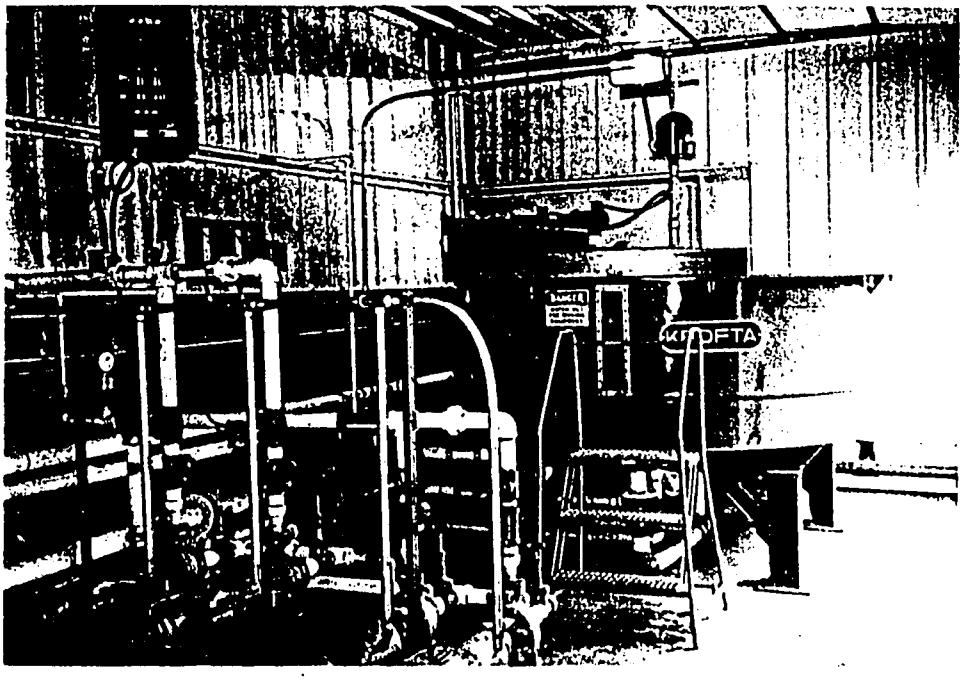

Maximum capacity is 148 GPM.

Presently the unit is operating at 55 GPM of raw inflow rate.

Incoming oil and grease		300 - 1000 mg/lit.
Outgoing " " "	less than	20 mg/lit.
Incoming Suspended solids	appx.	120 mg/lit.
Outgoing " "	less than	50 mg/lit.

Chemical treatment: Neutralization with caustic soda, addition of Anionic Polymer

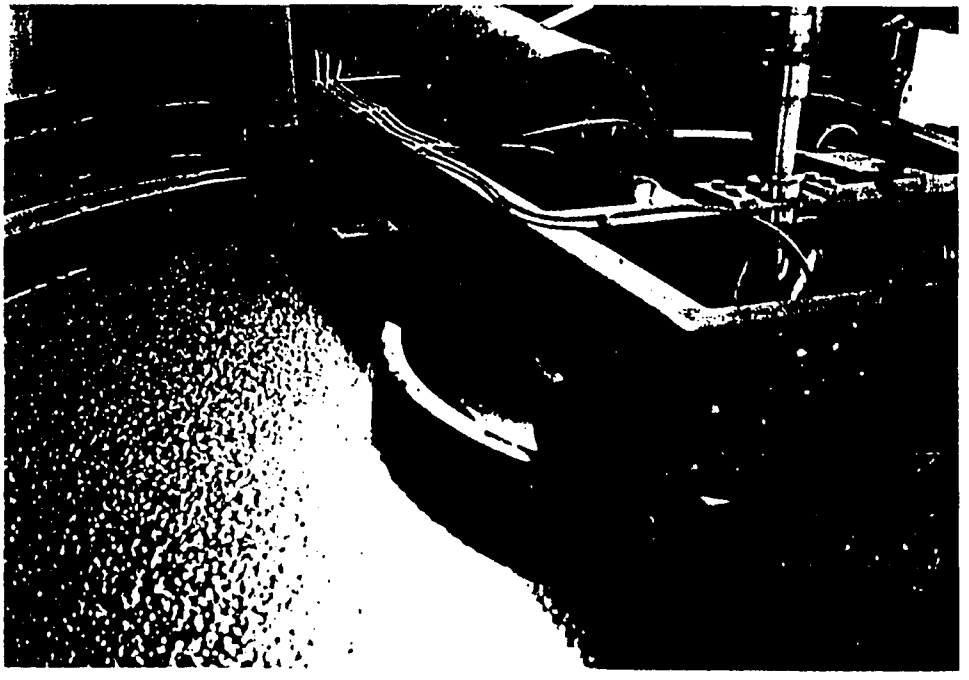

FEATURES :

- Gravity flow of effluent to the SUPRACELL from the flocculation step
- Compact indoor installation
- High oil content in the floated sludge

APPENDIX C

MICRO AIR®
AIR CLEANERS

INDUSTRIAL APPLICATIONS

125

INNOVATIVE PRODUCTS FOR SOLVING INDOOR AIR POLLUTION PROBLEMS.

DESIGNED TO CONTROL INDUSTRIAL AIRBORNE POLLUTANTS.

Whether your problem is welding smoke, grinding dust, oil mist, autobody dust, solvent odor, woodworking dust, solder smoke, or other pollutants, Micro Air has the solution for you. That's because our products are designed to be adapted for your particular problem . . . thus providing the most effective and correct solution.

WIDE VARIETY OF MODELS AVAILABLE.

Micro Air industrial air cleaners are available in units from 100 CFM to 5000 CFM with a broad range of filtration options. This total versatility allows us to recommend just the right model for your particular needs.

BENEFITS BEYOND COMPLIANCE WITH REGULATIONS.

Micro Air provides you with much more than compliance with OSHA or other governmental regulations. Employees receive healthy fringe benefits; morale is increased, heating and air conditioning costs are lowered; maintenance costs on other plant equipment are reduced.

FEATURES . . . THE KEY TO OUR PRODUCT LINE.

Our air cleaners are designed with the end user in mind. Micro Air industrial air cleaners include:

- 16 Gauge Steel Construction.
- Metal-to-Metal Sealing.
- Filter Change Lights.
- Unique Air Flow Pattern.
- Special Filtration for Specific Applications.
- Easy Access to Filters and Other Components.
- Heavy-Duty, Balanced Motor/Blower Combinations.
- Quiet Operation.
- Externally Supported Arms.
- Lighted Hoods.
- Oil Drain Knockouts.

THREE TYPES OF CLEANING AVAILABLE.

Micro Air products utilize three basic filtration options: Media, Electronic, and Cartridge.

MEDIA FILTRATION.

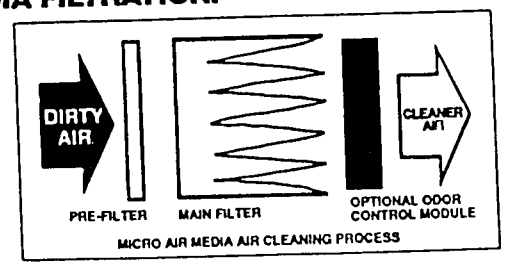

Polluted air flows through a pleated foam, or metal prefilter. This effectively removes the large particles. Next, the air passes through the main filtration system. This portion contains the primary filter media. It can be a bag filter, HEPA filter, or oil mist filter. This main filter captures the smaller particles of airborne impurities. An optional odor control module can be included to adsorb gases and odors. The air that is discharged is then pollution-free.

ELECTRONIC FILTRATION.

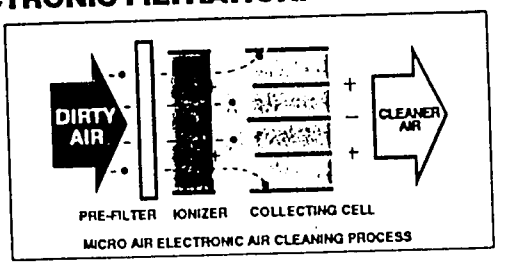

Polluted air flows through a prefilter, effectively removing the large particles. Then, the air moves to the ionizer section which charges the particles. They are then collected on the oppositely charged plates of the collecting cell. The air that is discharged is then pollution-free. An optional odor control module is available.

CARTRIDGE FILTRATION.

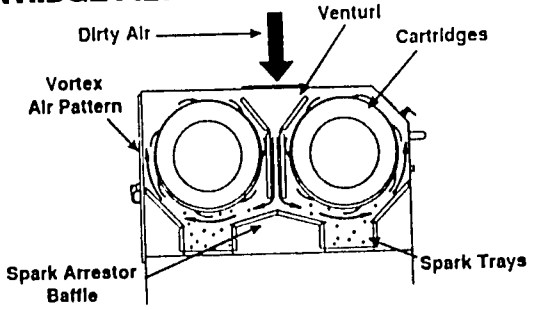

Dirty air enters the unit and is brought down and around the cartridges. This "Vortex" pattern forces the heavier particles down into the dust trays, and the dirty air is drawn through the cartridge where the smaller particles are collected. Micro Air cartridge units have a self-cleaning feature.

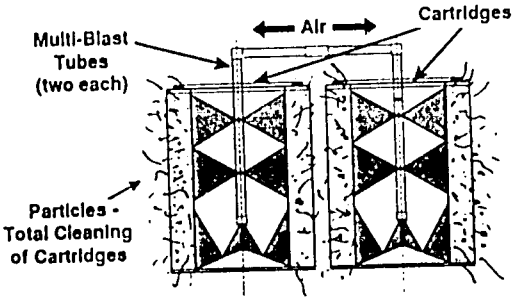

Micro Air "Total Clean" Backflush System

The air is pulsed into two tubes that are positioned in the center of each cartridge. Air not only exits the hole at the end of the tube, but also through openings along the length of the pipe. The result is air that "hits" all of the inside of the cartridge, pulsing dirt particles away from the filter for much more efficient cleaning.

126

SOURCE CAPTURE OR GENERAL CAPTURE SYSTEMS FOR EFFICIENT POLLUTION CONTROL.

SOURCE CAPTURE SYSTEMS.

As the name suggests, source capture applications involve capturing the pollutants at the source. This is the most effective method of controlling airborne particles. Micro Air units utilize arms, hoses, hoods, and duct work to accomplish this goal. Units are available in portable or fixed configurations.

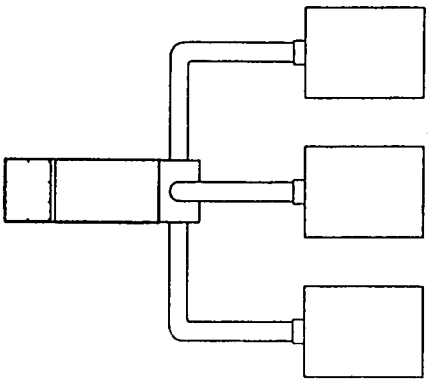

SMOKE EXTRACTION SYSTEMS.

Micro Air offers three models for use with smoke extraction-type weld guns.

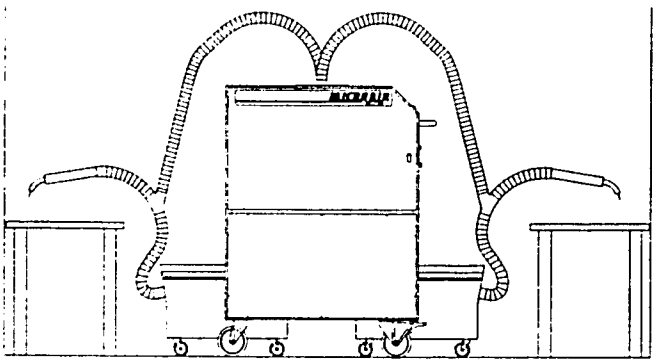

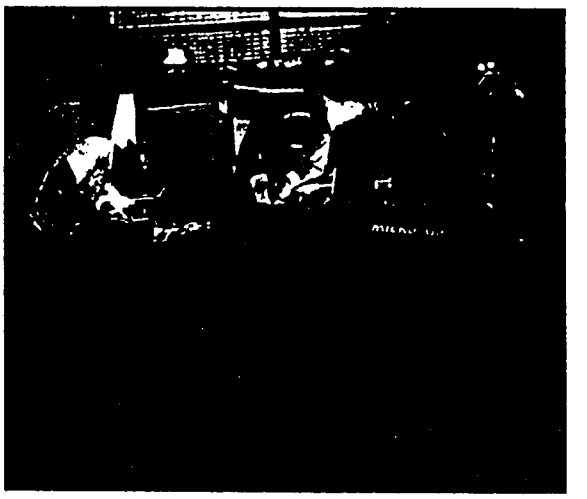

GENERAL CAPTURE SYSTEMS

Sometimes it is impossible to effectively utilize source capture techniques. Micro Air offers a wide choice of products for general capture situations in which you clean a total area rather than a specific source.

The "racetrack" concept is to place units in specific positions, usually eight to twelve feet above the floor, so that a continuous air flow pattern is created around the room to capture air pollutants.

Optional side exhaust provides an alternative system design when obstacles such as overhead cranes make the racetrack design impractical. This method moves air back and forth across the room.

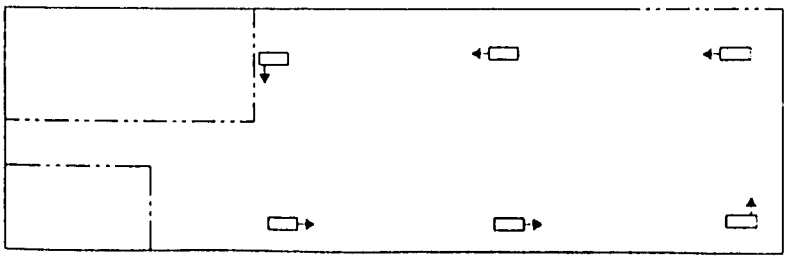

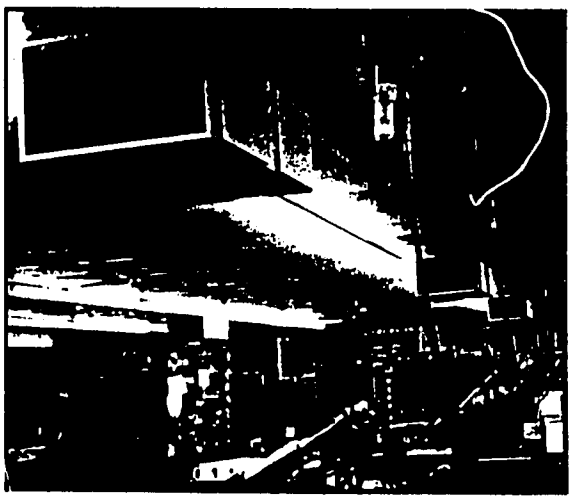

127

UNITS AND SYSTEMS DESIGNED F

hatever your industrial indoor air pollution problem, Micro Air has the solution for you. Units can be wall mounted, suspended from the ceiling, portable, ducte
ngineering assistance to meet your specific needs.

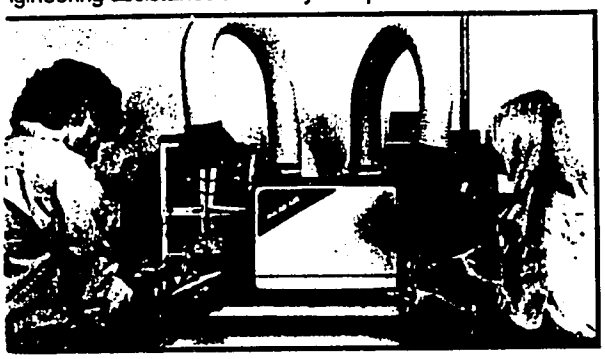

C150 on table controls solder smoke and fumes.

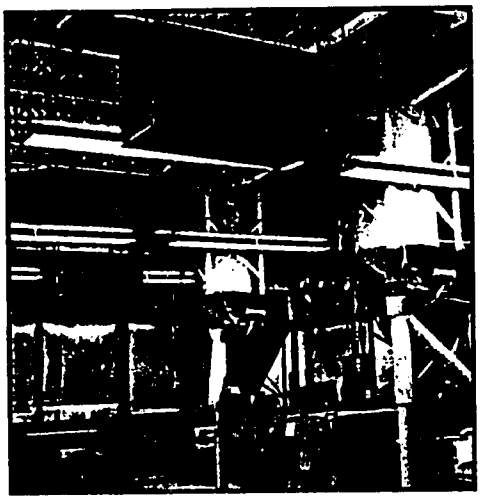

Model MX 1800's in grinding and powder room.

MX 3500 with source ca
smoke.

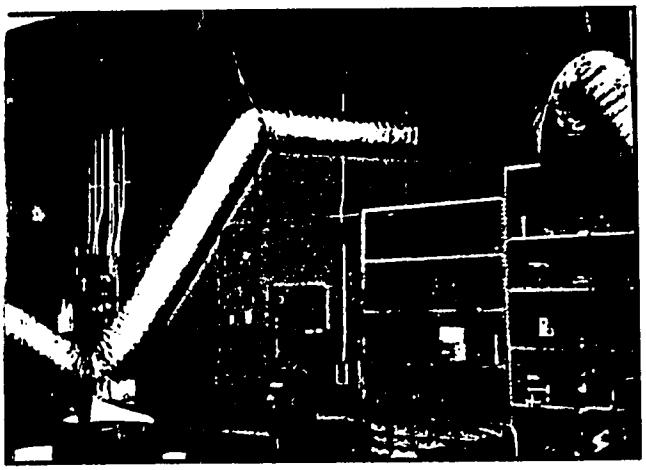

OM 1500 collects oil mist and smoke from two screw machines.

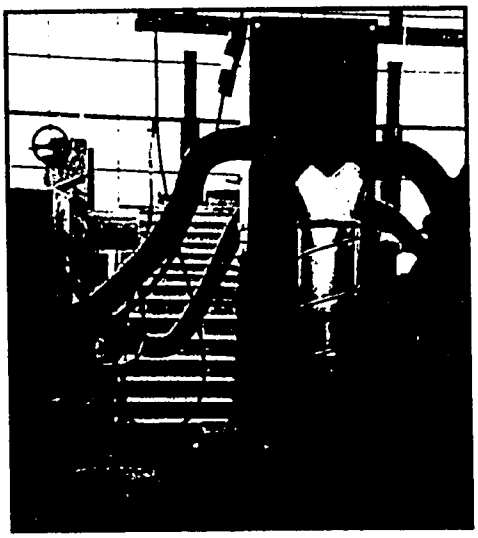

OM 1500 collecting oil mist and grinding dust from four machines.

MX 3500 in general capture ap
welding and cutting smoke.

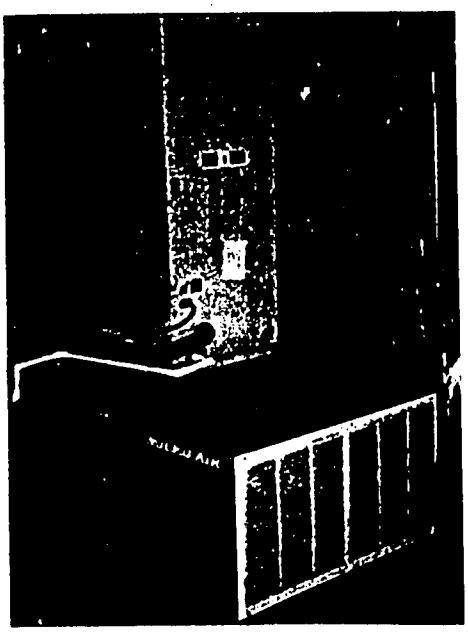

270BCC blowerless cabinet controls odors by utilizing charcoal media.

OM 1500 captures oil mist from lathes and cutting wheels.

MX 3500's in large
option.

OR INDUSTRIAL APPLICATIONS.

d . . . designed and configured to effectively clean up the air in your facility, whether it's a single welding station or an entire plant. We will provide

pture module ducted to two Micro Air SCA arms for capture of welding

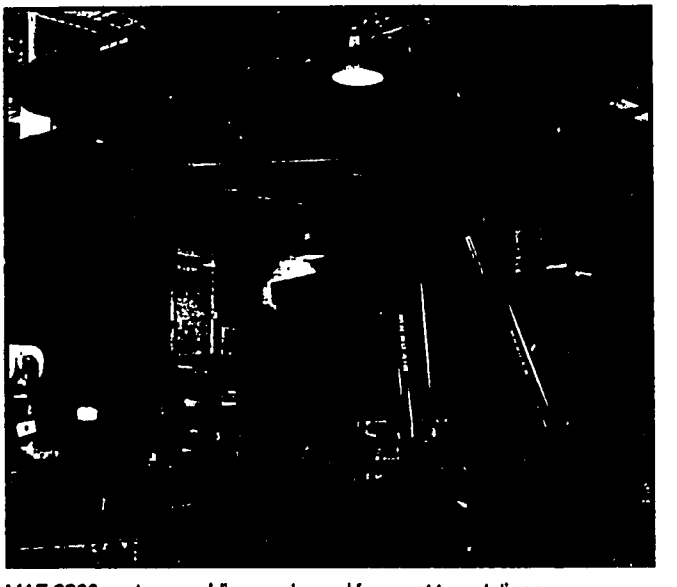

MAE 2200 captures welding smoke and fumes at two stations.

plication of

MX 3500's mounted vertically equipped with HEPA filtration. Units pull air from adjoining molding room and return clean air back into room.

MX 1800's with wraparound prefilters control dust from sanding and sawing operations in furniture manufacturing operation. Note particulate that has collected on prefilter module.

inting operation. Note side exhaust

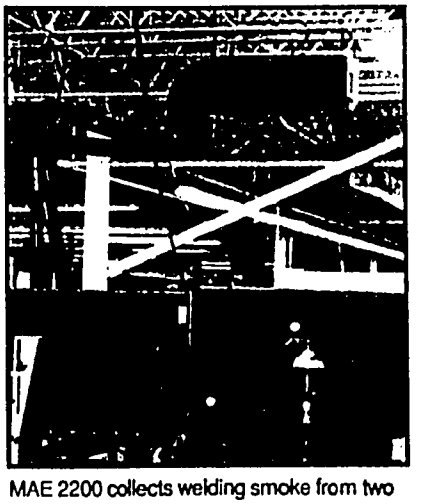

MAE 2200 collects welding smoke from two welding stations.

MA 4200 with special duct attached captures ink mist above high speed press.

129

SOURCE CAPTURE EXHAUSTER ARMS OFFER ADDITIONAL SOLUTIONS.

The new Micro Air line of exhauster arms gives you another choice for removing particulate and fumes at the source. A complete line is available featuring the revolutionary motorized arm, externally supported design, lighted hood, and easy operation.

Model SCA10P captures welding smoke at the source. Standard lighted hood provides excellent visibility.

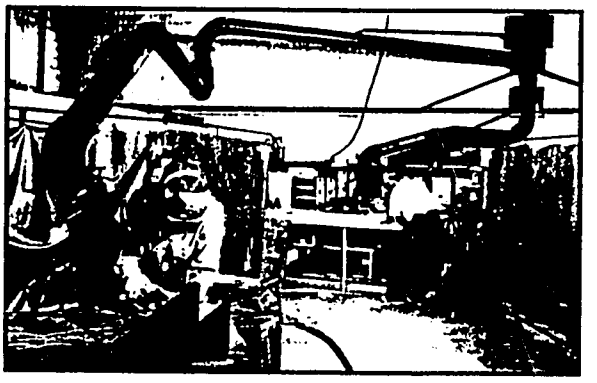

Boom Arm extends working range to 28'. Unique design allows two weld stations to be controlled.

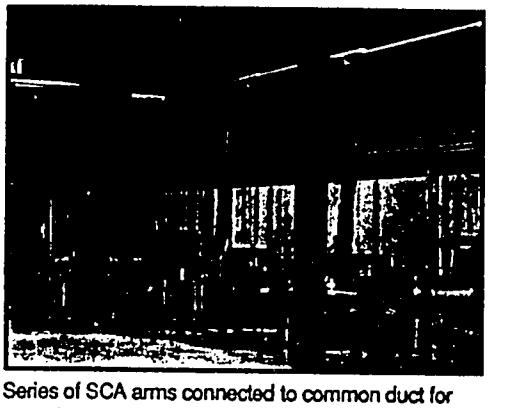

Series of SCA arms connected to common duct for capturing weld smoke at multiple welding stations.

W RANGE OF FILTRATION AND EQUIPMENT OPTIONS FIT SPECIFIC APPLICATIONS.

Micro Air offers the end user a complete line of filters and modules so that the correct combination can be used for the specific application.

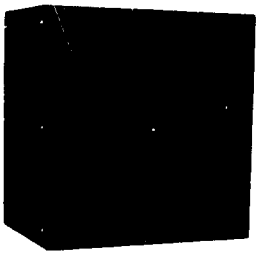

Odor control refillable module utilizes charcoal, activated alumina, or impregnated media to control specific fumes. Can be used separately or in conjunction with particulate filter.

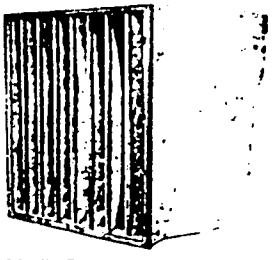

Media Bag filter 55% to 95% efficiencies.

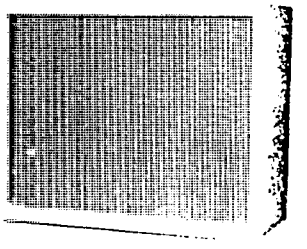

HEPA filter up to 99.99% efficient.

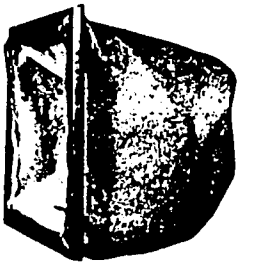

Cube filter for large particulate applications such as wood dust.

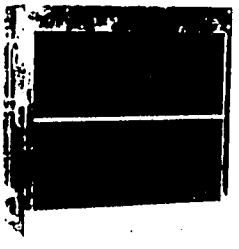

Collecting cell used with electronic filters.

Oil Impinger for oil mist units.

Wrap around prefilter extends life of bag filter.

Micro Air can supply you with just the right filtration to control your specific need . . . whether a bag filter, HEPA filter, oil impinger, cube filter, odor control module, or a combination.

COMMERCIAL MODELS CLEAN AIR IN OFFICE AREAS.

From common dust to cigarette smoke, ammonia gases to lab odors, Micro Air commercial models are designed for the same dependable performance as our industrial units. They are attractively designed to offer exceptionally quiet operation, and are available in sizes and configurations to match most requirements in offices, break rooms, designated smoking areas and data processing areas that require air cleaning in conjunction with your industrial applications.

RF 600 cleans the air in office reception areas.

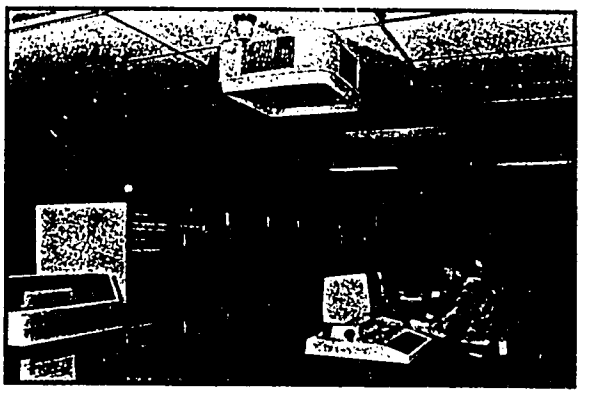

CFMKIV controls paper dust in data processing room.

CR 1000 controls dust in electronic lab area.

MAR 1200's in designated smoking area control tobacco smoke and odors.

MT1251 H/C controls offset powder and solvent odors in print shop.

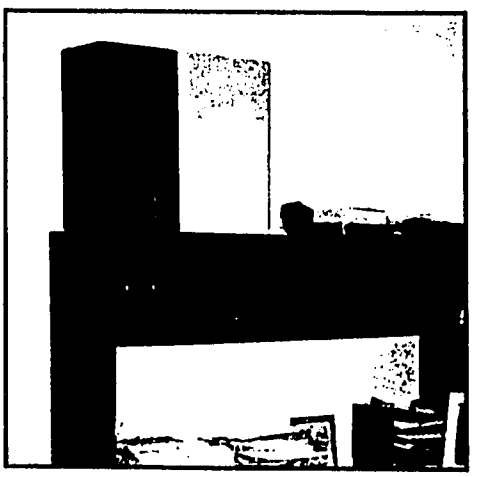

WM 500 in small office area.

131

PROFESSIONAL SUPPORT ENSURES SUCCESSFUL APPLICATION.

All of our Micro Air products are sold and serviced by a national network of distributors. These air cleaning professionals are experts at analyzing and then recommending the right system for your needs. In addition, our factory support includes design consultation, CAD drawings, and technical support . . . all at no charge to the end user.

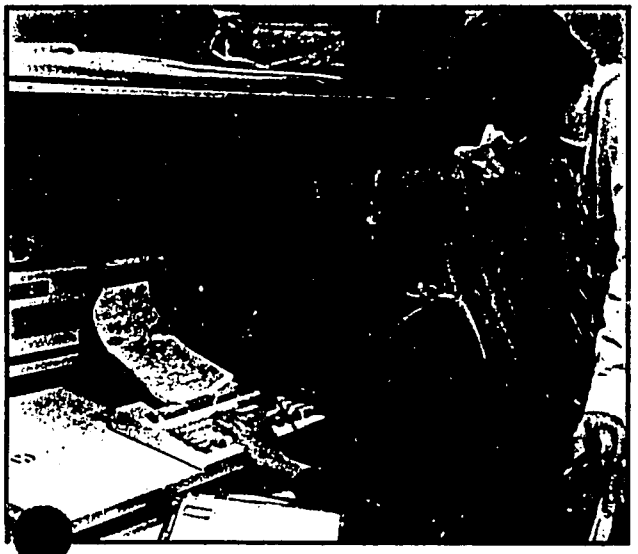

State of the art engineering and design department allows for fast response to end user needs.

Distributors are trained on all aspects of air cleaning and continually updated on new products.

MICRO AIR.
AIR CLEANERS
Products of Metal-Fab, Inc.
P. O. Box 1138 • Wichita, KS 67201
(316) 943-2351 • FAX (316) 943-2717

MICRO AIR®
AIR CLEANERS

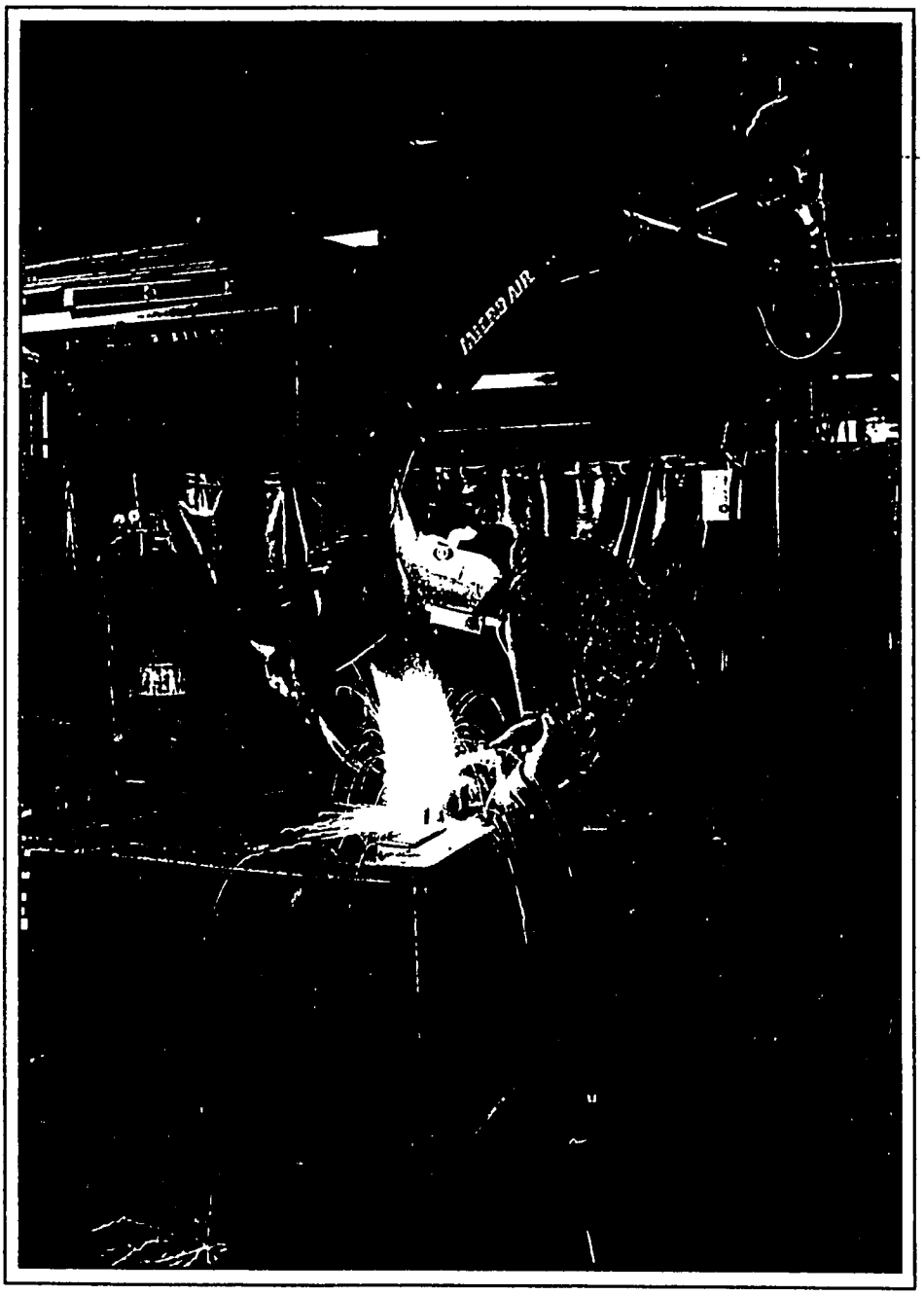

SOURCE CAPTURE EXHAUSTER ARMS

133

ENGINEERED FOR EXCEPTIONAL PERFORMANCE.

FIRST AND ONLY MOTORIZED ARM ON THE MARKET

The SCA608, 610, and 614 "P" models feature a linear actuator that moves the arm up and down electrically. This allows for precise positioning of the arm, and easy operation, while still providing solid support.

EXTERNALLY SUPPORTED ARM DESIGN

The new Micro Air SCA arms are externally supported for easy adjustment. There is no need to slide a hose off the arm like some other models in order to make an adjustment. Simply turn the knobs to increase or decrease the tension. This "clean" design provides for less maintenance and better air flow pattern.

EASY OPERATION

All controls are mounted on the hood, and are prewired for easy installation. The light switch, motor/blower switch, and actuator switch are located together for easy operation.

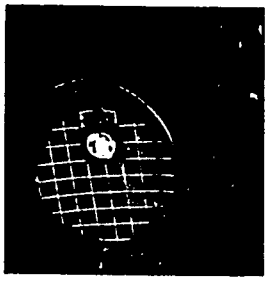

HOOD

The SCA hood, in addition to having a light, swivels up to 360°, for precise positioning. Protective screen is standard.

VERSATILITY

Boom arm extends work range of SCA arms up to 14' additional length, for a total reach of 28'. And, it is designed to accept another SCA arm at the mounting point for dual arm applications.

MODEL SCA-P - REVOLUTIONARY MOTORIZED ARM

- Linear Actuator Moves Arm Up and Down
- 6" and 8" Diameter
- 8', 10' and 14' Length
- Externally Supported Arm
- Lighted Hood
- Cable Protection System
- Motor/Blowers Available

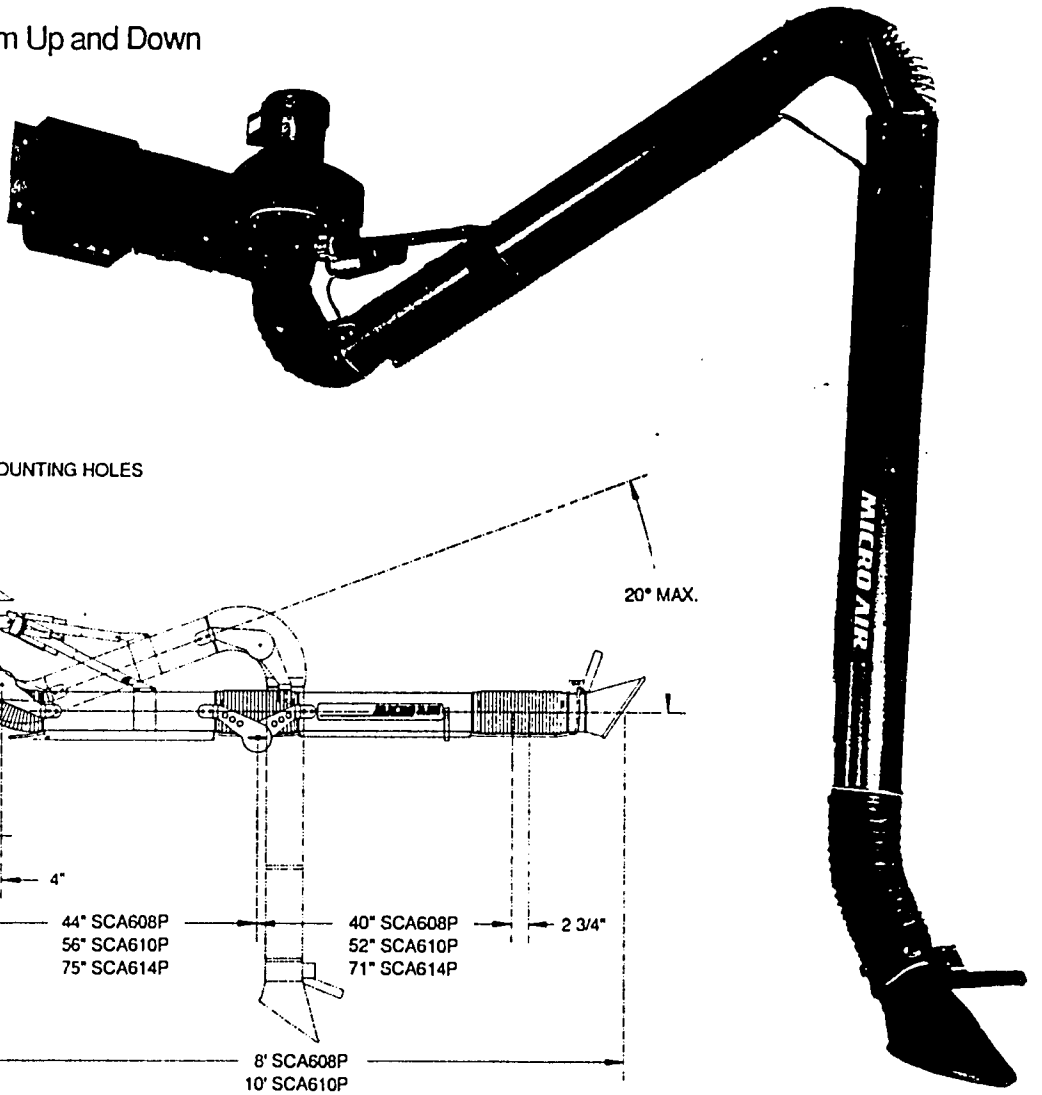

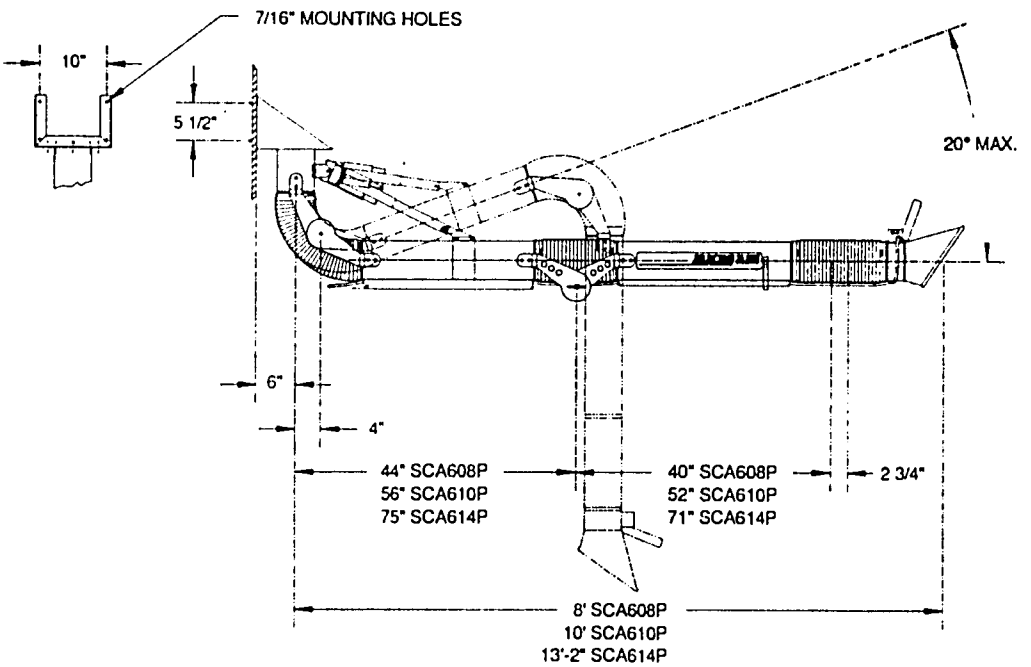

SPECIFICATIONS

MODEL	DIAMETER	LENGTH	WEIGHT
608P	6" (152.4 mm)	8' (2.6 m)	56 lbs. (24.45 kg)
610P	6"	10' (3.0 m)	59 lbs. (26.82 kg)
614P	6"	14' (4.3 m)	64 lbs. (29.09 kg)
808P	8" (203.2 mm)	8' (2.6 m)	68 lbs. (30.91 kg)
810P	8"	10' (3.0 m)	73 lbs. (33.18 kg)
814P	8"	14' (4.3 m)	80 lbs. (36.36 kg)

Arm Assembly: Two 24 gauge galvaneal steel tubes connected via flex hose and two external joints at the middle joint.

Controls: Motor/blower, light, and linear actuator switches are located at the hood.

Light: 12 volt Halogen lamp at 4 amps - standard.

Damper: Rotated open and shut via handle on side of arm - standard.

Hood: 16 gauge steel. Mesh guard prevents large objects from entering the hose. Hood swivels 360°.

Linear Actuator: Moves arm up and down at top. 1/8 hp. TEFC motor, 12" stroke at 35 in./min. 120 V at 2.1 amps, 24 V control circuit.

Mounting Bracket: Heavy duty welded steel - standard.

Air Volume: 6" diameter arms - 600 CFM (nominal), 3055 FPM, with 1 hp. exhauster.

8" diameter arms - 1150 CFM (nominal, 3295 FPM with 3 hp. exhauster.

Control Box: Standard with arm.

Exhauster Motor/Blower:

*TEFC, 1 hp. (1 kw) single phase, 120 V, 12.0 amps.
*TEFC, 1 hp. (1 kw) three phase, 208/230/460 V, 3.2 amps.
TEFC, 3 hp. (3 kw) three phase, 208/230/460 V, 8.0 amps.

*Used with 6" diameter arm only.

Finish: Industrial grade textured baked crimson red enamel paint on arm components. Hood, and mounting brackets black.

MODEL SCA - FIXED ARM

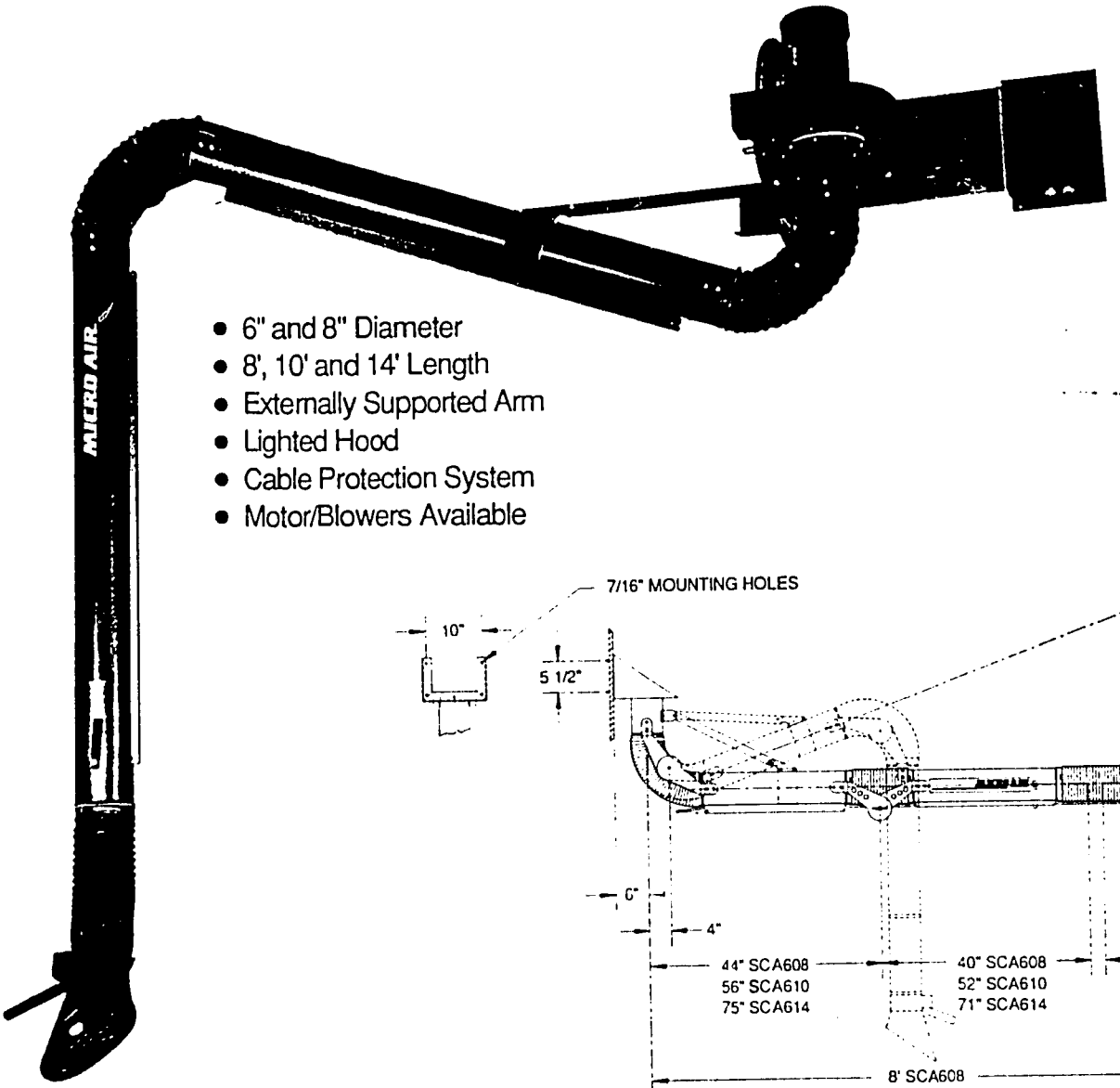

- 6" and 8" Diameter
- 8', 10' and 14' Length
- Externally Supported Arm
- Lighted Hood
- Cable Protection System
- Motor/Blowers Available

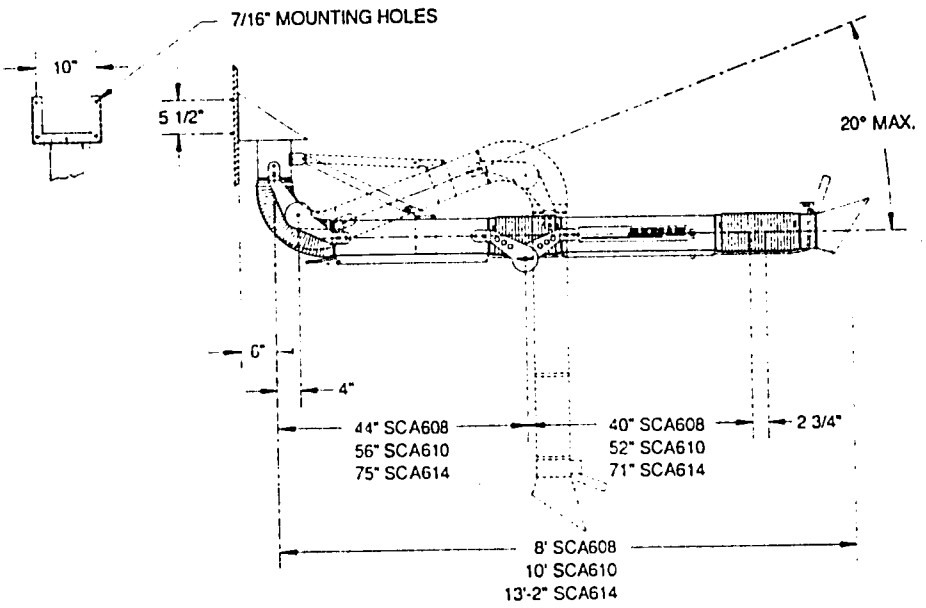

SPECIFICATIONS

MODEL	DIAMETER	LENGTH	WEIGHT
608	6" (152.4 mm)	8' (2.6 m)	44 lbs. (20.00 kg)
610	6"	10' (3.0 m)	47 lbs. (21.36 kg)
614	6"	14' (4.3 m)	52 lbs. (23.64 kg)
808	8" (203.2 mm)	8' (2.6 m)	56 lbs. (24.45 kg)
810	8"	10' (3.0 m)	61 lbs. (27.73 kg)
814	8"	14' (4.3 m)	68 lbs. (30.91 kg)

Arm Assembly: Two 24 gauge galvaneal steel tubes connected via flex hose and two external joints at the middle joint.

Controls: Motor/blower, and light switches are located at the hood.

Light: 12 volt Halogen lamp at 4 amps - standard.

Damper: Rotated open and shut via handle on side of arm - standard.

Hood: 16 gauge steel. Mesh guard prevents large objects from entering the hose. Hood swivels 360°.

Top Adjustment: Arm is easily adjusted at the top by sliding the bands to the desired position, and tightening the clamp.

Mounting Bracket: Heavy duty welded steel - standard.

Air Volume: 6" diameter arms - 600 CFM (nominal), 3055 FPM, with 1 hp. exhauster.

8" diameter arms - 1150 CFM (nominal, 3295 FPM with 3 hp. exhauster.

Control Box: Standard with arm.

Exhauster Motor/Blower:

*TEFC, 1 hp., single phase, 120 V, 12.0 amps.
*TEFC, 1 hp., three phase, 208/230/460 V, 3.2 amps.
TEFC, 3 hp., three phase, 208/230/460 V, 8.0 amps.

*Used with 6" diameter arm only.

Finish: Industrial grade textured baked crimson red enamel paint on arm components. Hood and mounting brackets black.

MICRO AIR BOOM ARMS

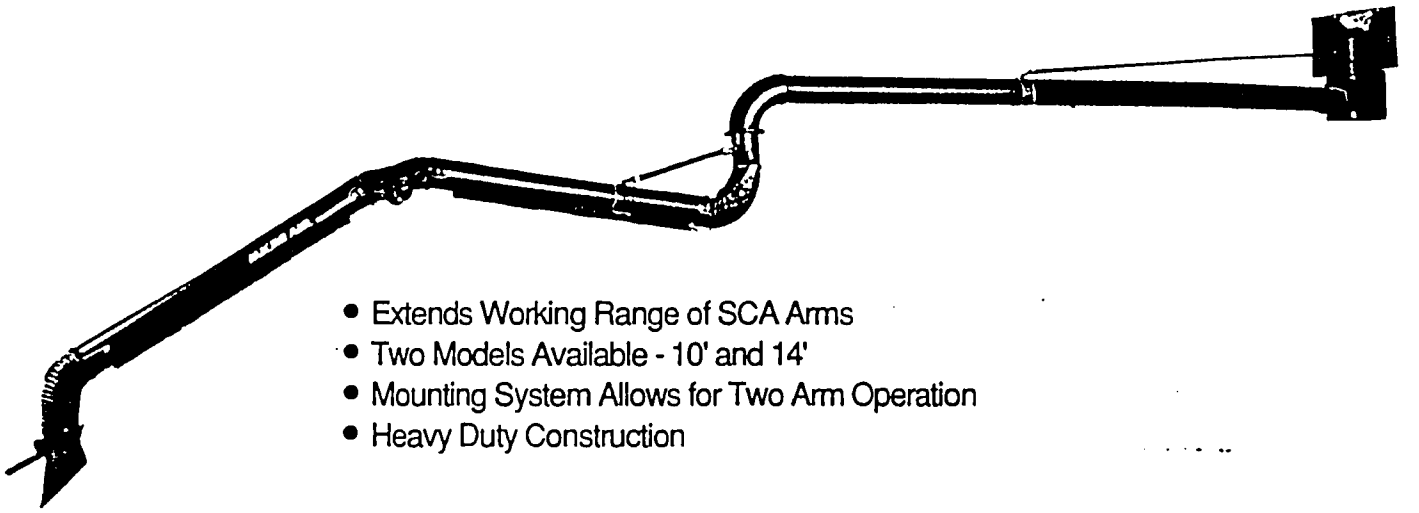

- Extends Working Range of SCA Arms
- Two Models Available - 10' and 14'
- Mounting System Allows for Two Arm Operation
- Heavy Duty Construction

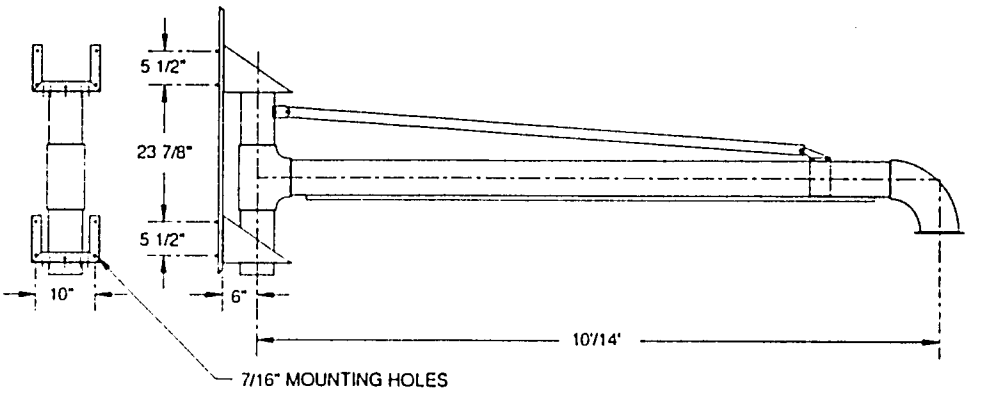

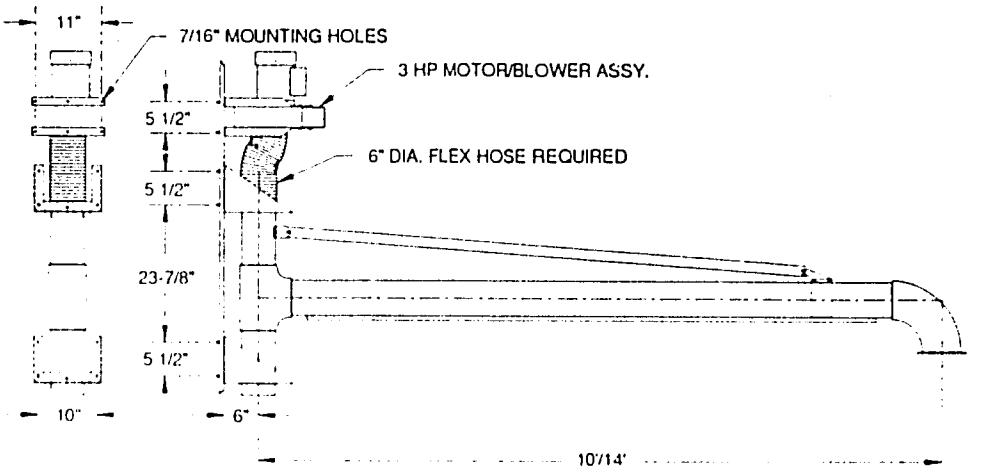

SPECIFICATIONS

MODEL	DIAMETER	LENGTH	WEIGHT
SCBA10	6" (152.4 mm)	10' (3.0 m)	220 lbs. (99.79 kg)
SCBA14	6" (152.4 mm)	14' (4.3 m)	250 lbs. (113.4 kg)
SCBA810	8" (203.2 mm)	10' (3.0 m)	320 lbs. (145.15 kg)
SCBA814	8" (203.2 mm)	14' (4.3 m)	350 lbs. (158.76 kg)

Boom Arm Assembly: 14 gauge welded steel tubing connected via weld to schedule 40 elbow and tee.

Finish: Industrial grade textured baked crimson red enamel paint.

Note: Any 6" or 8" diameter SCA arm (fixed or powered, 8', 10' or 14' length) can be attached to the appropriate 6" or 8" diameter boom arm.

TYPICAL INSTALLATIONS

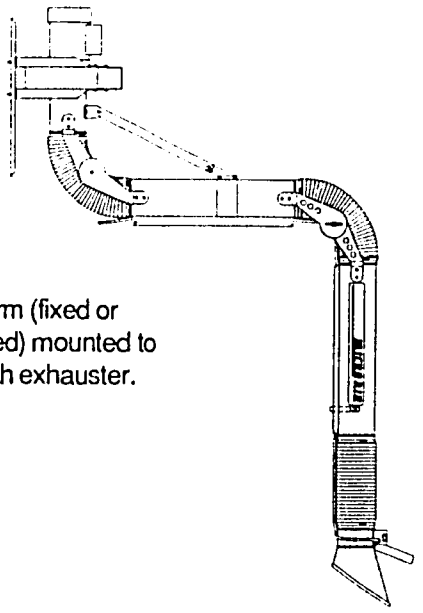

SCA arm (fixed or powered) mounted to wall with exhauster.

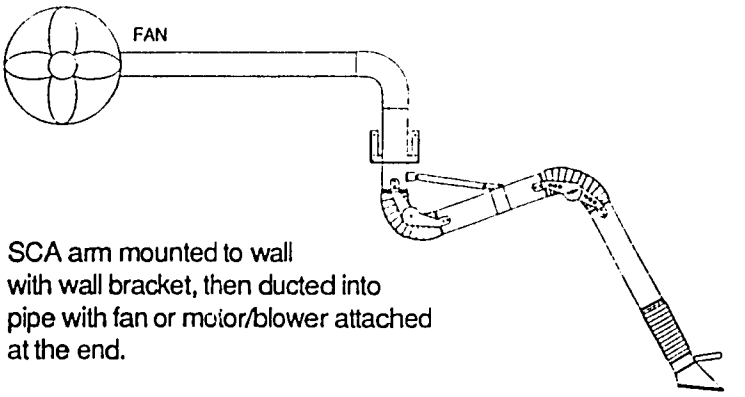

SCA arm mounted to wall with wall bracket, then ducted into pipe with fan or motor/blower attached at the end.

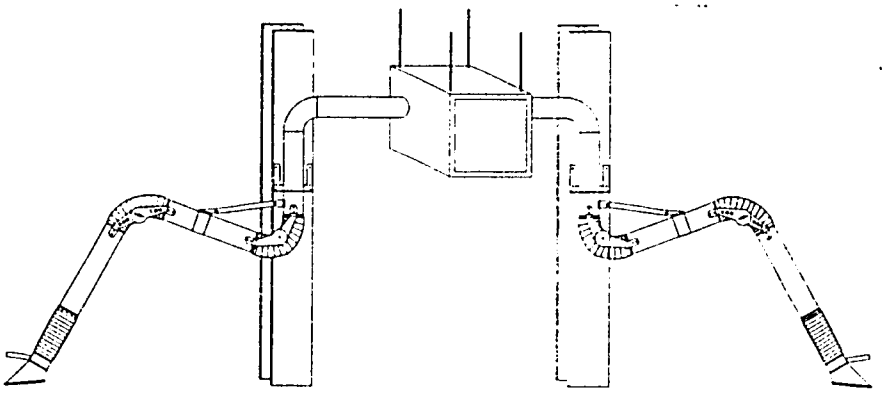

Two SCA arms installed to wall via wall brackets, then ducted into Micro Air air cleaner.

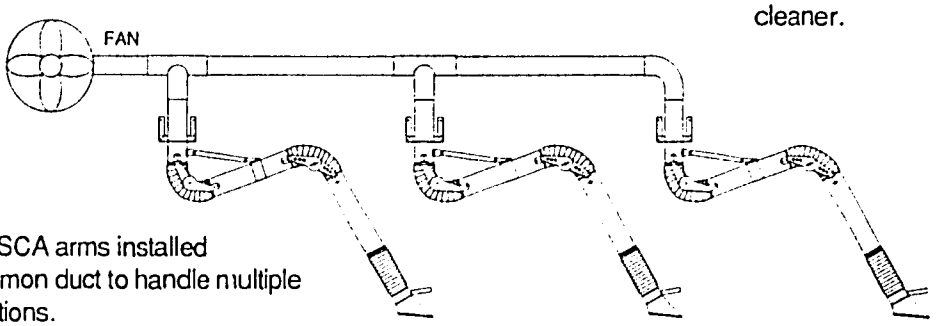

Multiple SCA arms installed into common duct to handle multiple work stations.

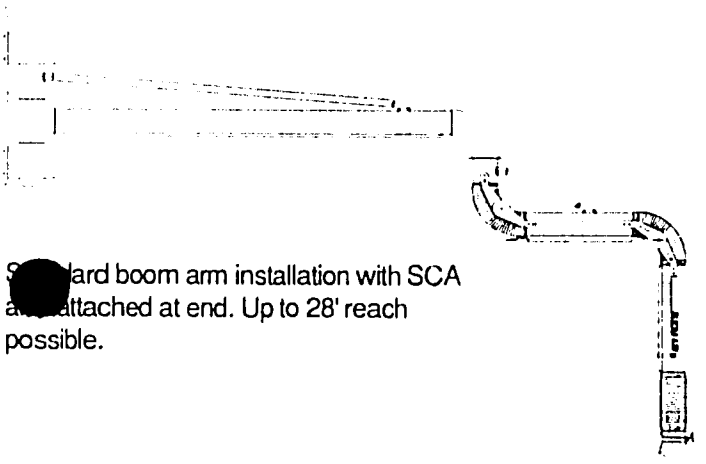

Standard boom arm installation with SCA attached at end. Up to 28' reach possible.

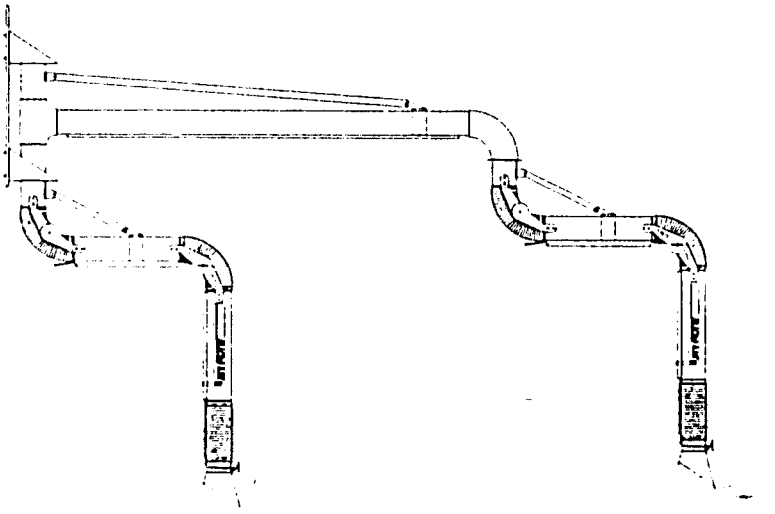

Boom arm mounted to wall with two SCA arms utilized, one at end of boom, and one at bottom of the mounting bracket.

TECHNICAL DATA

Illustrated below are various blower curves for the SCA product line. These are intended for you information, and illustrate the change in pressure drop in relation to the air volume. A minimum of 400 CFM (SCA 600) and 725 CFM (SCA 800) is recommended for each fume extractor for normal welding. For multiple station applications, or any other situation, please contact your local Micro Air distributor for assistance.

SCA 600

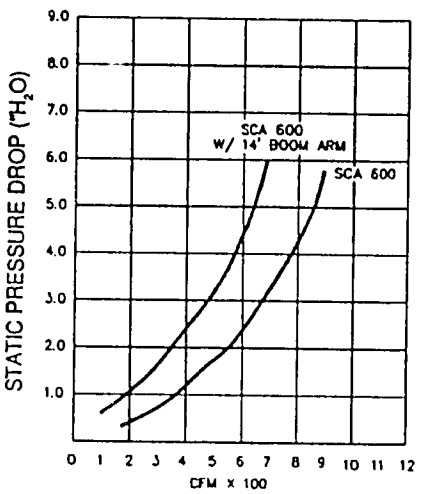

SCA 600 WITH 1 H.P. EXHAUSTER

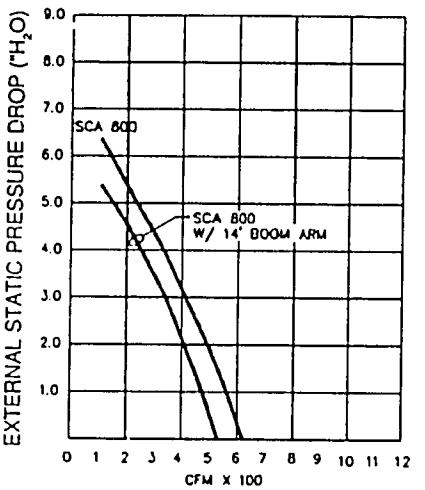

SCA 600 WITH 14' BOOM ARM & 3 H.P. EXHAUSTER

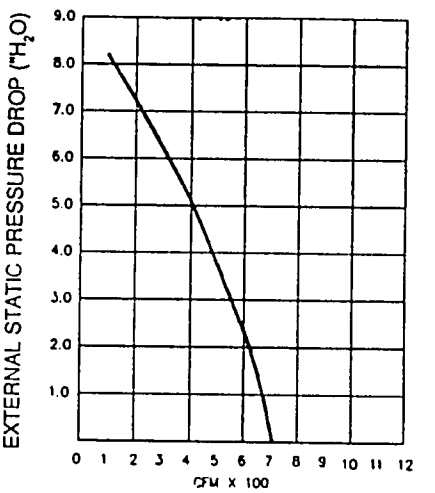

SCA 800

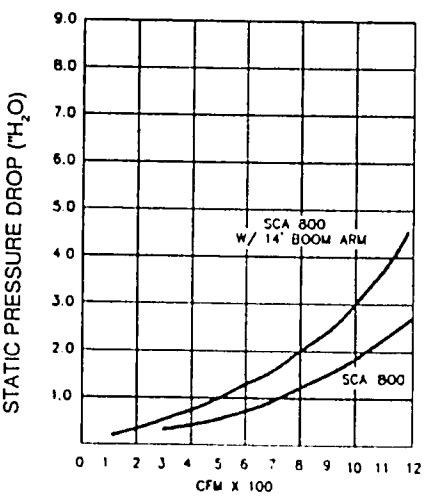

SCA 800 WITH 3 H.P. EXHAUSTER

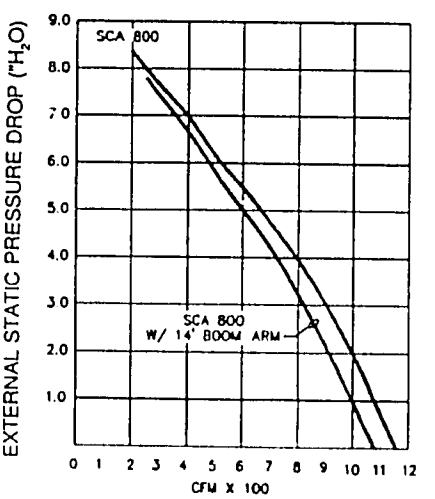

FACTORY TRAINED DISTRIBUTORS

All Micro Air products are backed by a network of distributors trained at the factory. They are experts in solving virtually any indoor air pollution problem.

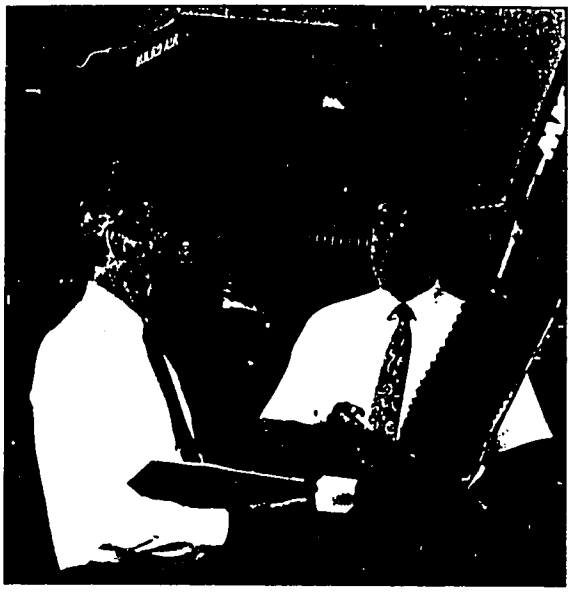

SOLD AND SERVICED BY:

MICRO AIR
AIR CLEANERS

Products of Metal-Fab, Inc.
P. O. Box 1138 • Wichita, KS 67201
(316) 943-2351 • FAX (316) 943-2717

Litho in U.S.A.

©1993 Metal-Fab, Inc. Form No. L1202-7/93

APPENDIX D

SLUDGE DEPTH METER

MARKLAND SERIES 600

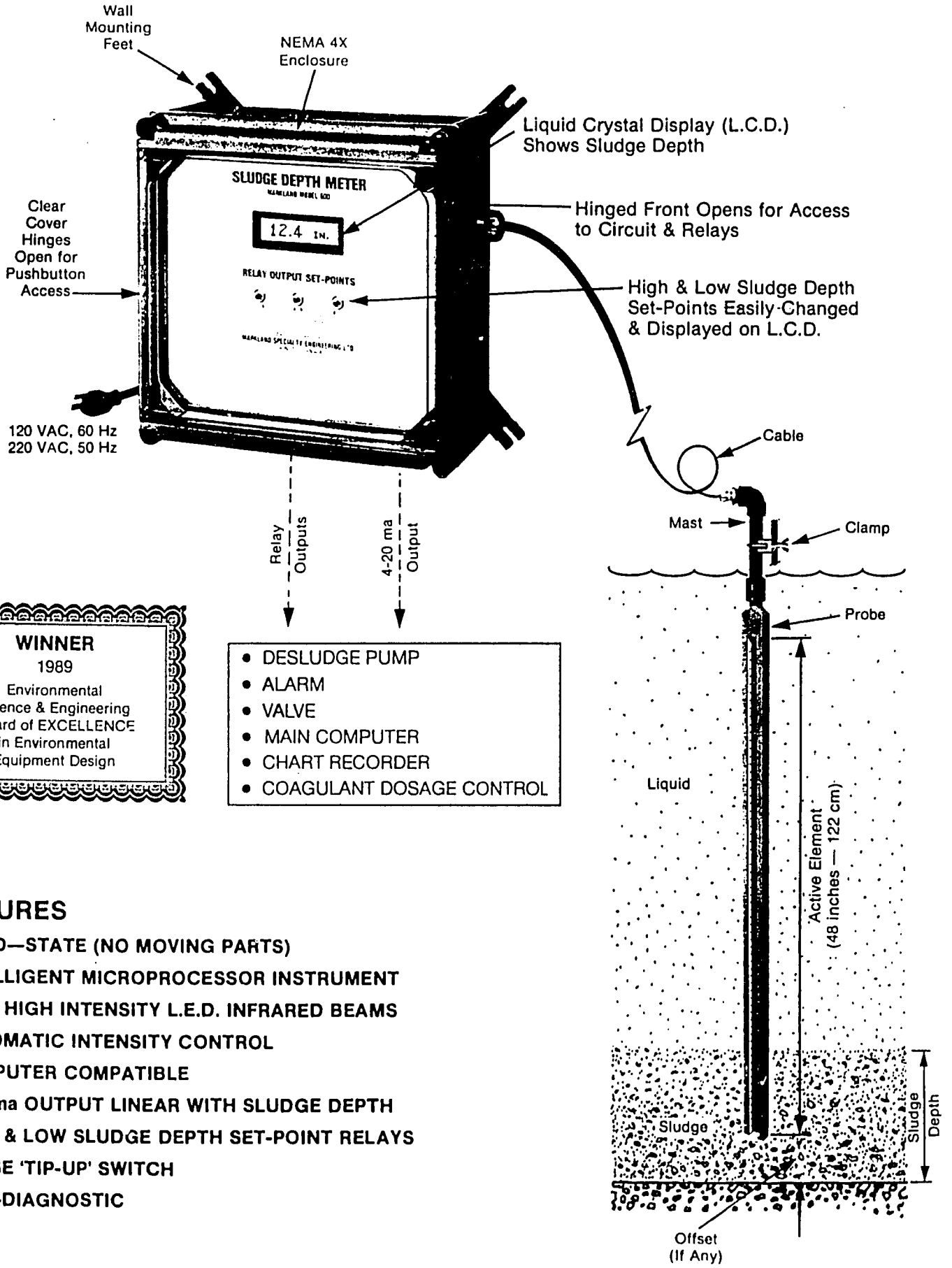

WINNER
1989
Environmental Science & Engineering Award of EXCELLENCE in Environmental Equipment Design

- DESLUDGE PUMP
- ALARM
- VALVE
- MAIN COMPUTER
- CHART RECORDER
- COAGULANT DOSAGE CONTROL

FEATURES

- SOLID—STATE (NO MOVING PARTS)
- INTELLIGENT MICROPROCESSOR INSTRUMENT
- VERY HIGH INTENSITY L.E.D. INFRARED BEAMS
- AUTOMATIC INTENSITY CONTROL
- COMPUTER COMPATIBLE
- 4-20 ma OUTPUT LINEAR WITH SLUDGE DEPTH
- HIGH & LOW SLUDGE DEPTH SET-POINT RELAYS
- PROBE 'TIP-UP' SWITCH
- SELF-DIAGNOSTIC

PATENTED U.S.A. 4680475
OTHERS PENDING

PROBE ACTIVE ELEMENT
(NO SCALE)

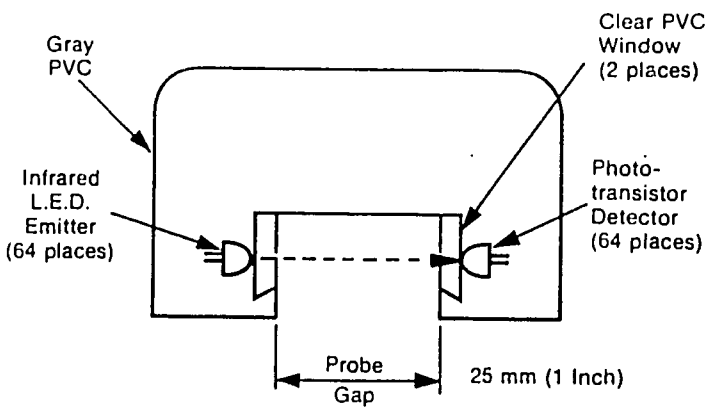

64 L.E.D./Phototransistor pairs are stacked vertically on 19 mm (¾ inch) centers. See "How It Works" below for operating description.

PROBE TIP-UP SWITCH
(NO SCALE)

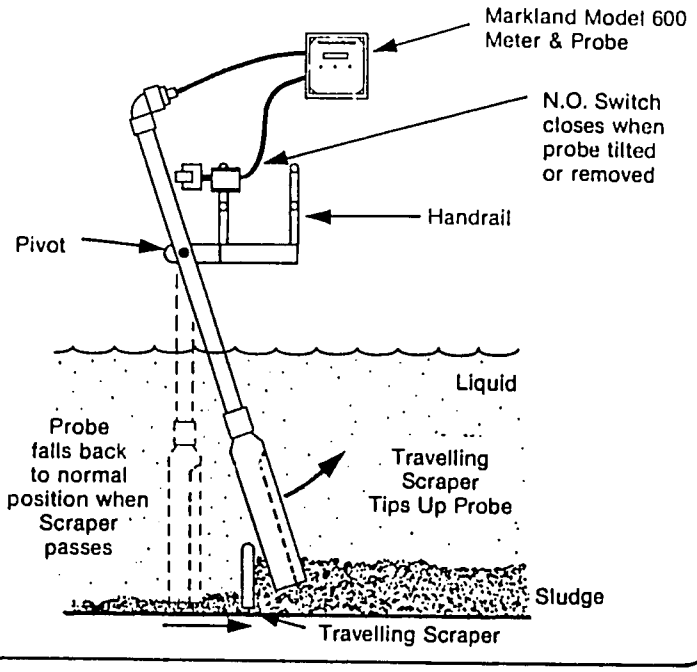

HOW IT WORKS

A vertical Probe, submerged in the tank, contains 64 infrared Light Emitting Diodes (L.E.D.) stacked vertically, which shine horizontally across a probe gap to 64 Phototransistor detectors. This gap contains either liquid or sludge. See the cross section of the Probe Active Element illustrated above, showing one of the LED/Phototransistor pairs. The 64 pairs are sequentially scanned by a microprocessor to locate the sludge bed.

SET-POINT RELAYS

Two independent set-points (High & Low) are standard. In order to ignore short term transient sludge 'clouds', the actual depth must exceed the set-point for 30 seconds *continuously*, before the Relay energizes. Similarly, there is a 10 second delay which also must be *continuous* before the Relay will de-energize. Set-Point values are displayed on the L.C.D. when front panel pushbuttons are pressed. Changing the set-point is accomplished by simply pushing buttons and watching while set-point values scroll past on the L.C.D. The scroll rate slows down for jogging to the final desired value. Releasing the pushbuttons locks the new set-point into the EEPROM memory, which indefinitely retains the set-point, even during power failure, without requiring backup batteries.

PROBE TIP-UP SWITCH

A Meter connection is provided for attachment to a *Normally Open* switch which contacts the probe mast when in its proper vertical position, and closes when the Probe is either tipped up, or removed. This closure immediately locks the last sludge depth reading into the Meter, which continues to show this value along with a travelling underline on the L.C.D. that indicates to the Operator that the Meter is displaying an old value. When the Probe is returned to its normal vertical position, the switch opens, but the Meter waits 30 seconds for the sludge to settle down before resuming its normal operation, at which time the travelling underline disappears. This switch is useful to allow a Scraper to pass under the hinged Probe; or to allow the Probe to be removed for cleaning without disrupting the normal operation. The switch can also be used to blank out the Meter during any process upset which disturbs the sludge bed.

APPLICATIONS

The Meter is used in sewage and industrial sludges and slurries to monitor and control the liquid/solid interface in circular and rectangular Clarifiers; Lamella Separators; Gravity Thickeners; Dissolved Air Flotation tanks; and Grit Chambers and sumps. For liquid/liquid interface control, or other special applications, consult the factory.

TYPICAL INSTALLATIONS

CIRCULAR CLARIFIER

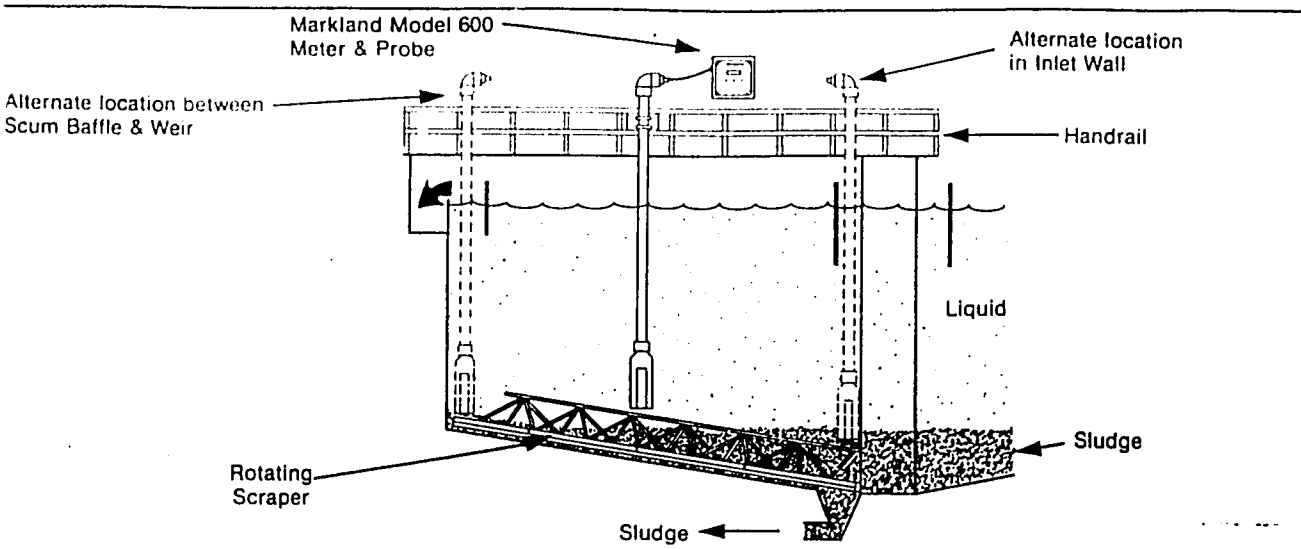

RECTANGULAR CLARIFIER

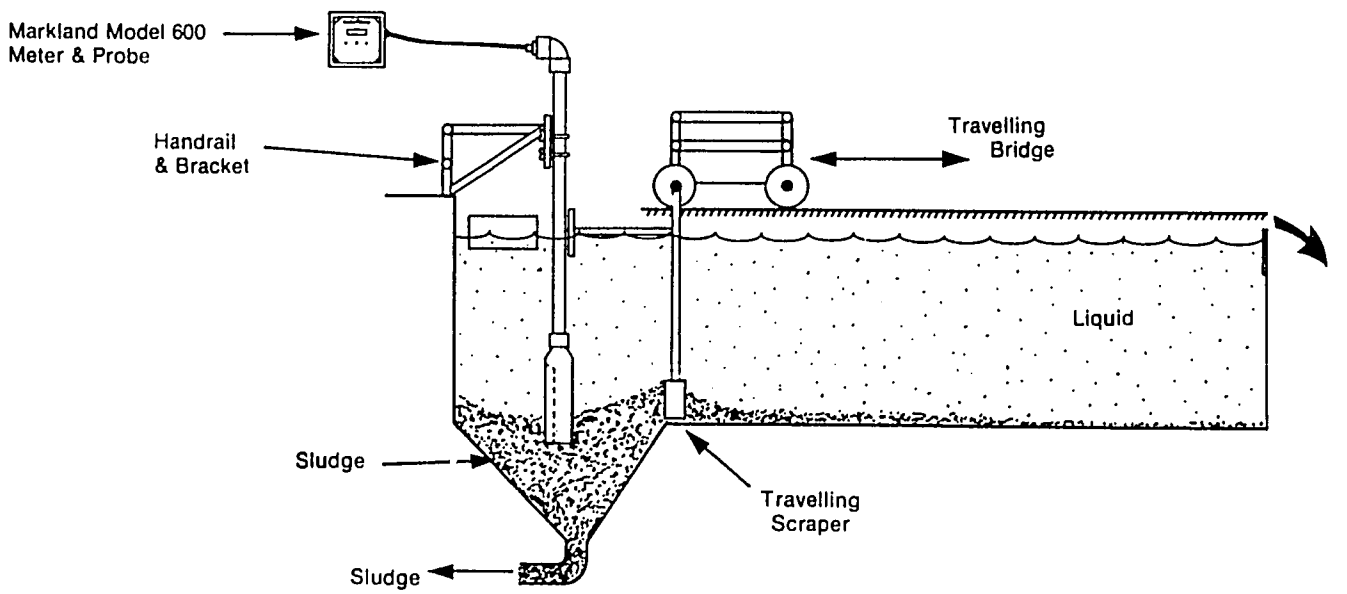

DISSOLVED AIR FLOTATION THICKENER

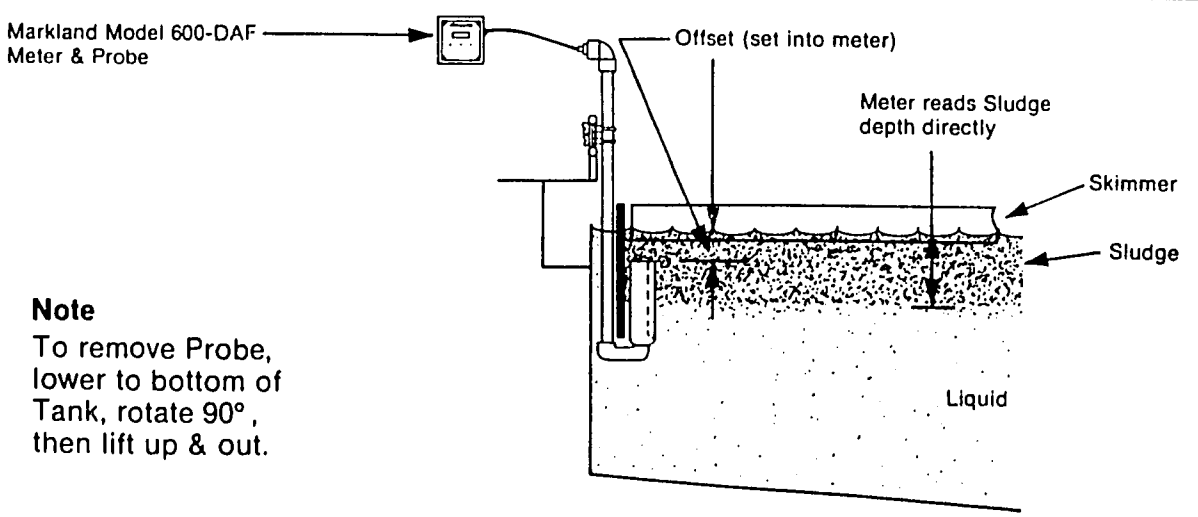

Note

To remove Probe, lower to bottom of Tank, rotate 90°, then lift up & out.

144

MICROPROCESSOR CONTROL

A microprocessor scans the Probe elements and l[illegible]s the sludge bed if there is one, and displays this o[illegible]e L.C.D. Any bottom offset is automatically incorporated into the reading. Out of range, or zero readings are displayed if there is no sludge/liquid interface. Error trap routines identify and reject bad scans. To lessen the impact of short term events such as passing 'clouds', the Meter accumulates a running average of several good scans, which dampens the response and smooths the output. If after several attempts, the Meter can not obtain good scan data (i.e. broken wire, etc.) the L.C.D. reads "SIGNAL LOST", both Relays are de-energized, and the 4-20 ma output goes to zero indicating *fault*. During a fault condition the Meter continues trying to find good scans and resumes normal operation as soon as good data is obtained. Using techniques borrowed from computer photographic enhancement, the microprocessor disregards individual beam signals which are not consistent with those on either side; thus, spot fouling, or floating clumps are ignored, and minor failure in Probe elements merely creates a 'dead spot'. The entire Probe does not have to be replaced. Automatic intensity control adjusts the L.E.D. firing power to the correct level for each particular sludge/liquid. Progressive slime buildup on the Probe merely results in the instrument boosting its own power to the intensity required to shoot through the scum. An integral self-diagnostic routine displays the microprocessor's memory on the L.C.D., and makes troubleshooting easy.

PROCESS CONTROL

A desludging pump can be operated automatically from the Low Set-Point along with a Pump Run Interval Timer, and the High Set-Point used as an alarm for excessive sludge depth. Alternatively, the desludge pump can be turned ON at the High Set-Point, and OFF at the Low Set-Point. The Meter is useful for decant control, resin level monitoring, and slurry inventory assessment. On-line real-time computer monitoring of sludge depths is accomplished through the 4-20 ma output.

OTHER MARKLAND SYSTEMS

Markland's portable sludge level detector, the SLUDGE GUN®, is a valuable operating tool for manual sludge bed detection. Markland also manufactures ultrasonic Meters for controlling sludge levels or monitoring suspended solids. Markland DUCKBILL® wastewater Samplers operate without mechanical moving parts for reduced maintenance and high reliability. Write for a complete catalog of Markland products.

MODEL	FUNCTION
600	Reads sludge depth **up** from tank bottom
600-UD	Reads sludge blanket location **down** from liquid surface
600-DAF	Reads sludge/liquid interface in Dissolved Air Flotation tanks
600-LF & 600-LF-UD	Special models for use in thin floc sludges (see separate brochure 600-LF)
600-DUAL & 600-DUAL-UD	Uses 2 probes, one mounted 48 in. (122cm) above the other to give 96 in. (244 cm) continuous span. There are 32 element pairs/probe spaced 38 mm (1½ in.) on centers

SPECIFICATIONS

Materials	Probe — PVC; Cable — Vinyl Jacketed Mast — PVC Pipe; Enclosure — Fiberglass Body & Clear Plastic Cover Clamp — Stainless Steel & Polypropylene
Dimensions	Probe: Overall Length 1330 mm (52¼ in.) Active Element Length 1219 mm (48 in.) Cross Section 64 mm (2½ in.) x 38 mm (1½ in.) Gap — 25 mm (1 in.) Mast — 3½ meters (12 ft.), 1 in. Sch. 80, shipped in 3 pieces with fittings Cable: Probe Pigtail — 10 metres (33 ft.) Enclosure: Width 350 mm (13¾ in.) • Height 350 mm (13¾ in.) • Depth 200 mm (7⁷/₈ in.)
Cable Length	10 metres (33 ft.) pigtail supplied (measured from top of Probe). Maximum cable length 150 metres (500 ft.). Order extra cable separately if pigtail length not sufficient
Active Element Spacing	64 pairs infrared L.E.D./Phototransistor, spaced vertically on 19 mm (¾ in.) centers (except DUAL Models)
Accuracy	±2 cm (±1 in.), DUAL Models ±4 cm (±2 in.)
Bottom Offset	Switch adjustable, 0-99 cm, or 0-99 in. (Note: For Models 600-DAF & 600-UD types, this is TOP OFFSET)
Depth Units	Switch selectable, inches or centimeters
Temperature	Maximum 50° C (120° F)
Power	120 volts, 60 Hz or 220 volts, 50Hz, 15 watts
Outputs	• Liquid Crystal Display (L.C.D.), 16-Digit Alphanumeric • 4 - 20 ma output signal, linear with sludge depth • Two DPDT, 5 Amp. Relays, independently adjustable set-points
Response Time	30 seconds
Microprocessor	6809 with one EPROM and one EEPROM

MANUFACTURED BY

MARKLAND SPECIALTY ENGINEERING LTD.

18 SHAFT ROAD, REXDALE (TORONTO), ONTARIO CANADA M9W 4M2

Telephone: (416) 244-4980 **Fax: (416) 244-2287**

PORTABLE SLUDGE LEVEL DETECTOR

MARKLAND MODEL 10 SLUDGE GUN®

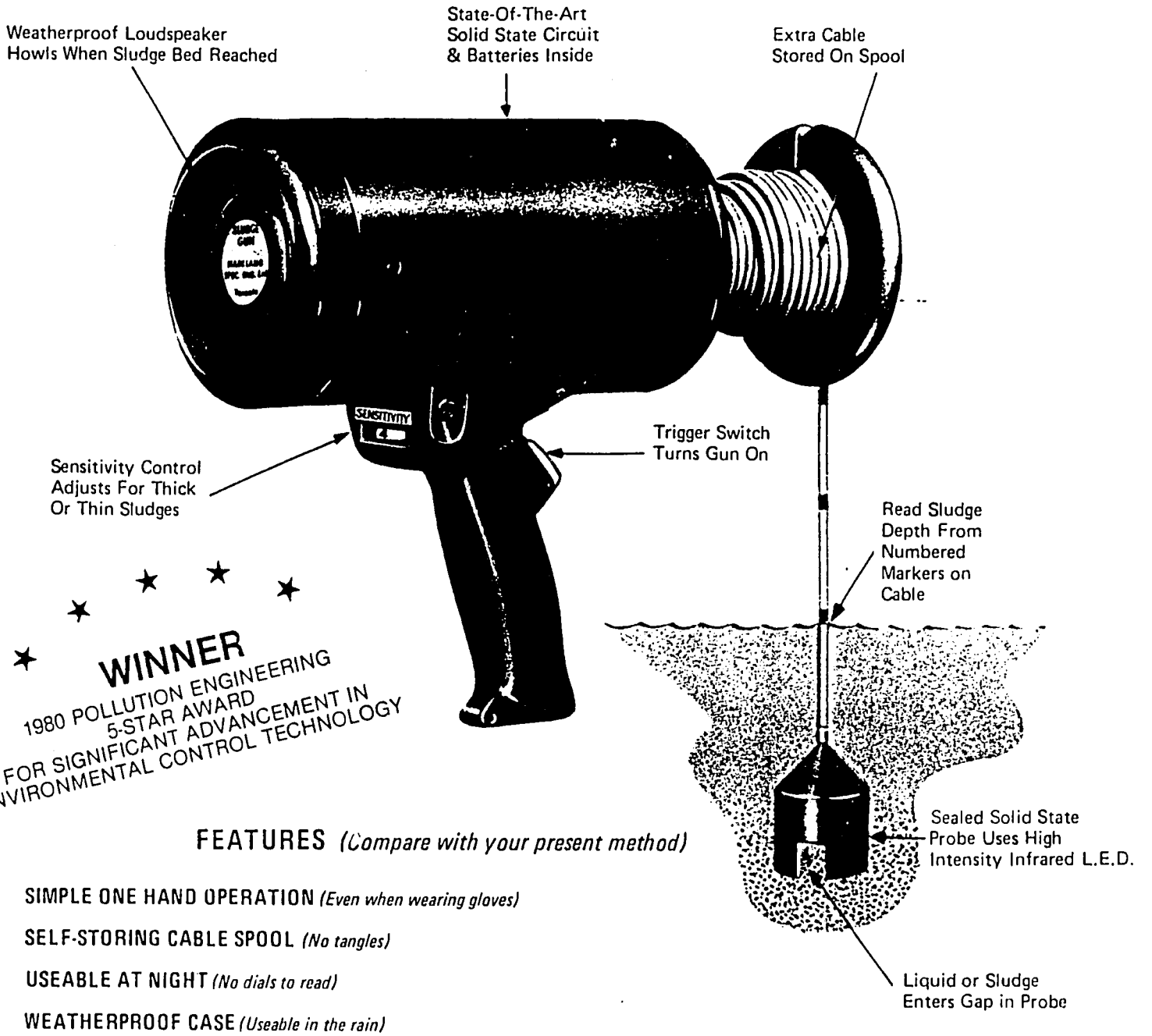

★ ★ ★ ★ ★

WINNER

1980 POLLUTION ENGINEERING
5-STAR AWARD
FOR SIGNIFICANT ADVANCEMENT IN
ENVIRONMENTAL CONTROL TECHNOLOGY

FEATURES *(Compare with your present method)*

- SIMPLE ONE HAND OPERATION *(Even when wearing gloves)*
- SELF-STORING CABLE SPOOL *(No tangles)*
- USEABLE AT NIGHT *(No dials to read)*
- WEATHERPROOF CASE *(Useable in the rain)*
- SPRING LOADED TRIGGER TURNS GUN OFF *(Can't leave on & drain battery)*
- NO LIGHT BULBS TO CHANGE *(100% solid state)*
- OVER ONE YEAR BATTERY LIFE *(Normal service)*
- THUMB-ADJUSTABLE SENSITIVITY CONTROL *(Easy to set)*
- USES STANDARD PENCELL BATTERIES *(Readily available)*
- SINGLE PLUG-IN STYLE PRINTED CIRCUIT BOARD *(Easily replaced if ever necessary)*

EVEN THE MOST INEXPERIENCED OPERATOR CAN USE THE SLUDGE GUN®

146

HOW IT WORKS

When the trigger is depressed, high intensity bursts of focused infrared light are transmitted by a solid state LED (Light Emitting Diode) across a probe gap which contains either liquid or sludge. The highly penetrating infrared beam is received by a sensitive phototransistor on the other side of the gap. This pulsing is repeated many times per second by the electronic control circuit. If the gap contains air or clear liquid, nothing happens. However, when suspended solids are encountered in the gap, some beam energy is absorbed, and the rear facing loudspeaker on the butt of the gun starts to howl. As the percent solids content increases, both the pitch and volume of the sound increase which gives the operator a clear indication of where the thickest sludge is located. By holding the trigger and listening to the note while slowly moving the probe up and down, the operator can observe the depth markers on the cable and establish the location of both the sludge blanket and the overlying unsettled layer.

EASY TO USE

Markland's popular Sludge Gun® makes even an inexperienced operator an expert at sludge level detection. A trigger turns on the gun, and a thumb adjustable sensitivity control compensates for thin or thick sludges. There can be no mistaking the loud howl of the speaker as the probe enters the sludge bed. Variable pitch sound (higher pitch for higher % solids) permits locating both the upper and lower limits of the settling zone above the sludge bed. After use, the cable is wound on the self-storing spool at the front of the gun. The one hand, one piece, Sludge Gun® detector is easy for an operator to carry from tank to tank. Use it in the rain or snow, day or night...This rugged tool is a valuable addition to any plant.

FIXED INSTALLATION

Markland Series 600 Sludge Depth Meters can automate desludging or function as intelligent sensors for your computer or PLC. Ask for complete details.

SPECIFICATIONS

• Weight	2 Kilo (4¼ Lbs.)
• Batteries	Six Alkaline Pencells
• Battery Life	One Year (Normal Service)
• Materials	Probe – PVC & Epoxy Cable – Vinyl Jacketed Gun – PVC & Aluminum
• Operating Temperature	Minus 20°C (0°F) to 50°C (120°F)
• Loudspeaker	3 Watts, Weatherproof Type
• Printed Circuit Board	Epoxy-Glass, Moisture Sealed, Plug-In Style
• Sensitivity Control	Trip point can be adjusted from barely cloudy water, right up to the thickest sludge
• Cable Length	10 Metres (33 Feet)
• Cable Markers	Self Adhesive Vinyl (Numbers 1 to 30) (Shipped loose for customer installation at either foot or metre readings)

MODEL 10HS - Special high sensitivity version can be used to detect Air/Liquid or Air/Powder interface in addition to Liquid/Sludge interface.

MANUFACTURED BY

MARKLAND SPECIALTY ENGINEERING LTD.

48 Shaft Road, Rexdale (Toronto), Ontario, Canada M9W 4M2
Telephone: (416) 244-4980 Fax: (416) 244-2287

147

TELEPHONE: (416) 244-4980

FAX (416) 244 2287

MARKLAND SPECIALTY ENGINEERING LTD.

48 SHAFT ROAD, REXDALE (TORONTO), ONTARIO, CANADA M9W 4M2

ORDER YOUR SLUDGE GUN® DIRECT FROM THE FACTORY

U.S.A. PRICE LIST - FEB. 1994

Markland Model 10 Sludge Gun®, c/w batteries, probe and 10 metres (33 ft.) of cable, with depth markers (1 to 30) included. Factory tested and ready to operate. Price------$875.00

PRICE	-	U.S. Dollars
F.O.B.	-	Delivered to all parts of the continental U.S. Postage is prepaid by us and is included in price.
DELIVERY	-	Stock - 2 weeks
TERMS	-	Net 30 Days
STATE OR USE TAX	-	Not Included (If Applicable)

NOTE: There is a 'small order' surcharge of $25.00 for handling on all orders less than $100.00.

148

PARTS LIST

Markland Model 10 Sludge Gun®

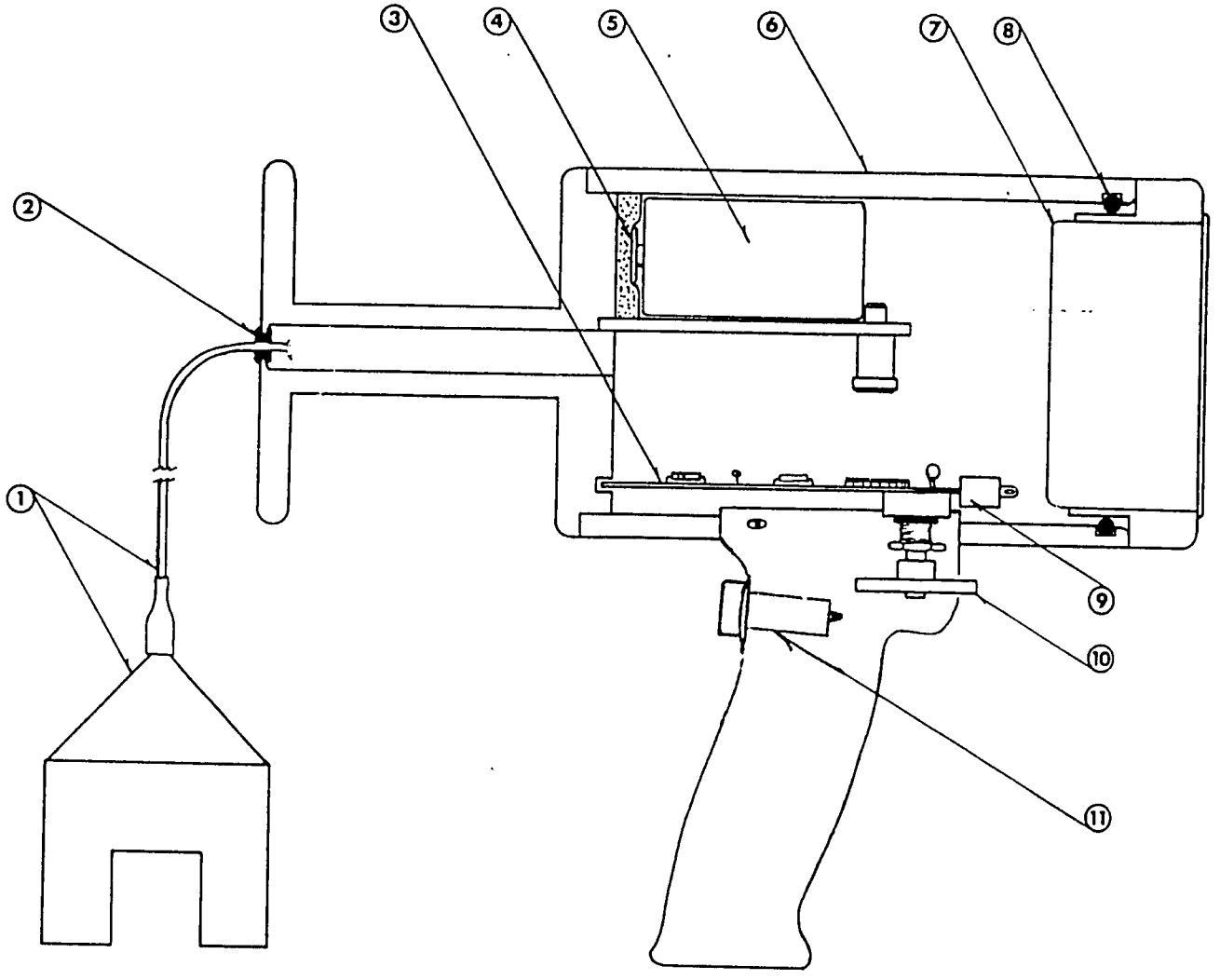

Part No.	Name	Price
1/10	Sealed Probe and Cable Assembly	$275.00
2/10	Grommet	0.50
3/10	P.C. Board Assembly	225.00
4/10	Battery Connector	3.00
5/10	Battery Holder (Buy Batteries Locally)	9.00
6/10	Body Assembly, complete	295.00
7/10	Loudspeaker/End Ring Assembly	58.00
8/10	"O"-Ring	2.00
9/10	P.C. Board Connector	5.00
10/10	Sensitivity Adjust Knob	8.00
11/10	Switch	9.50

ARMORED SLUDGLITE®

Model 8002 SCCS™

Twenty-six years experience in all kinds of tough Sludge Blanket applications prove SLUDGLITE® to be the most rugged and reliable Sludge Blanket Level Detector in the world... and it is ***Armored*** for lasting durability!

- ***Fights Abuse***
  Recessed lamp and photocell prevents damage.
- ***Shock Protection***
  Neoprene rubber boot and upper 'O' ring bumper absorbs bumps.
- ***Triple Grip Security***
  New PVC cable and cable-probe connection ensures maximum integrity.
- ***Sealed Against Leaks***
  'O' ring construction throughout.
- ***Fast Field Repairs***
  Automatic omni-position photocell.
- ***Thousands in Use***
  There's a SLUDGLITE® working near you.

Tote Handy Reel makes the SLUDGLITE® easier and more convenient to use!

- Added protection for years of use
- Holds the Receiver, organizes the Cable, and stores the Probe
- Spare Parts Kit recess
- Clipboard on the back

Please Note: If you wish, your present SLUDGLITE® Model 8000 SCCS and 8001 SCCS™ probe may be upgraded at the factory to the new ***Armored*** SLUDGLITE®. Call for details.

Patent No. 4,463,819

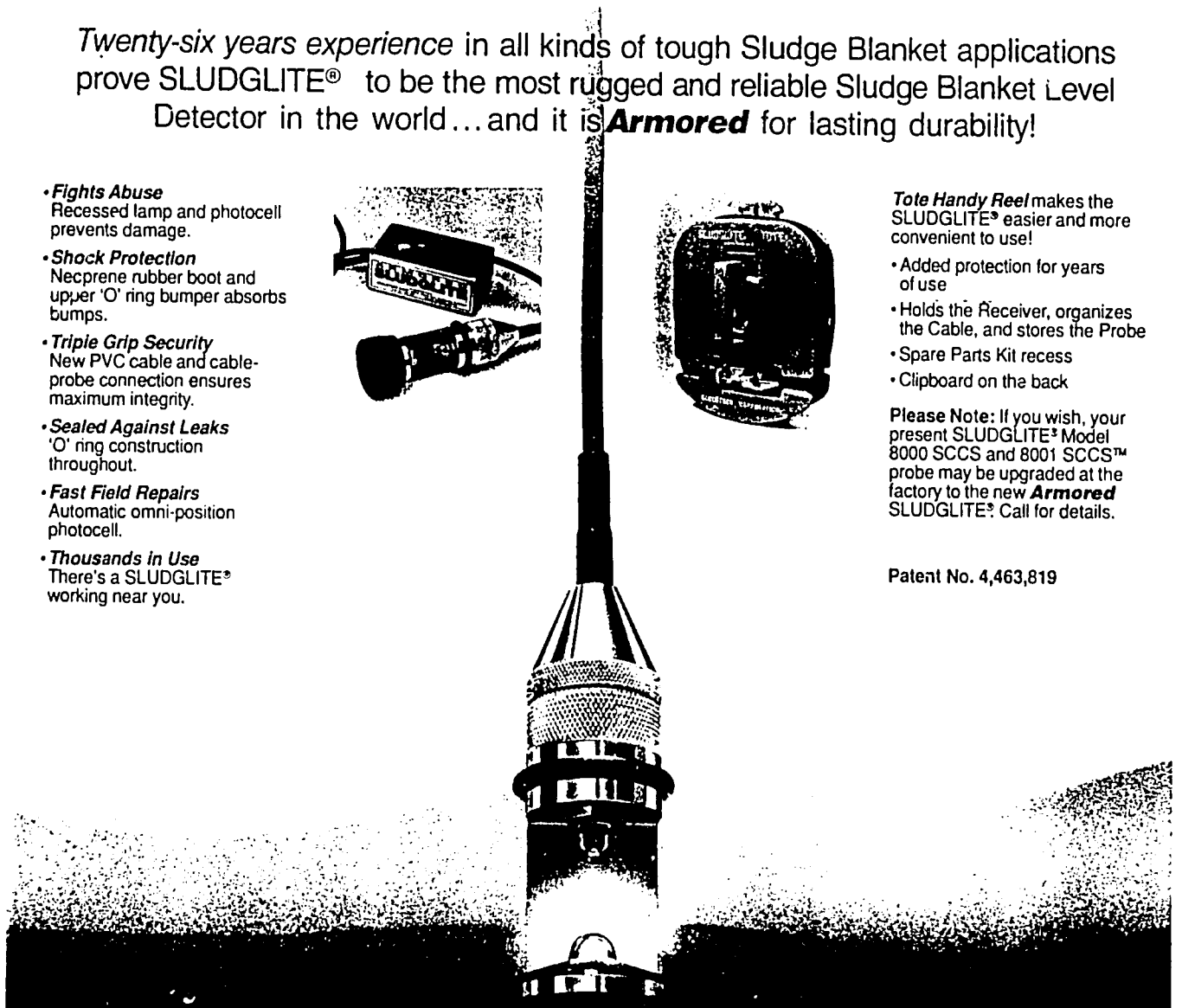

Call or Write For Brochure

ecoLOTECH

351 South Waiola Avenue
LaGrange, IL 60525
Phone: (708) 352-2277
Fax: (708) 579-9842

150

Optical Sensing Probes Determine Sludge Levels

By Robert M. Bauer II
Allegheny County
Sanitary Authority
Pittsburgh, PA

The economical dewatering of sewage sludge is related to, but not limited to, filter operating parameters, type and dosage of polymers and system design. A very critical factor is the concentration of the feed solids to the filter. When these solids are generated by the withdrawing of sludge from the bottom of a settling basin or tank, it is imperative the sludge contain a high concentration of solids. An operator, therefore, must have some prior knowledge as to the solids concentration in the feed stock before pumping the sludge to the filter. In the absence of sludge density and solids metering equipment, a quick and efficient method of determining relative sludge concentrations and sludge blanket levels is through the use of an optical sensing probe.

The Allegheny County Sanitary Authority (ALCOSAN) was formed in 1943 to provide wastewater treatment to the City of Pittsburgh and surrounding communities. The plant began operation in 1959 as a primary treatment plant. The plant was upgraded to secondary treatment (activated sludge with contact stabilization) in 1973. This facility serves over one million people and has an average daily flow of 185 MGD. Approximately 100 dry tons of solids per day are produced with final disposal by landfilling, beneficial reuse or onsite incineration.

Sludge is generated at ALCOSAN in six sedimentation tanks (180' × 67' × 15'). This sludge is a combination of primary and waste activated sludge and averages 4.5% solids. This sludge is continuously pumped to ten, two meter belt presses for dewatering. In order to provide "good" sludge to the presses, operators "bomb" the sedimentation tanks every four hours to determine the sludge blanket depth in each tank. Each tank is measured at two locations for a total of 72 measurements a day. Pumping of the sludge to the belt presses is limited to one half hour per tank and the tanks are rotated to prevent coning in the sludge blanket and thus the pumping of thin sludge or water.

ALCOSAN originally measured the sludge blankets by using a home made core sampling device consisting of conduit, clear vinyl tubing with angled aluminum for support and a 3/4" ball check valve. This device was lowered into the sedimentation tank until it touched the bottom. The "bombing stick" was then raised with the ball check valve preventing the sludge from leaving the tubing. The operator could then directly read the level of sludge in the tank by observing the sludge in the tubing. Advantages to this method are: consistent measurements among different operators as the sludge/water interface is usually well defined within the tubing, low cost and low maintenance, and direct visualization of the sludge. Disadvantages are: cumbersome - the length required is 20', clogging of the ball check valve with discrete particles, discoloration of the tubing and growth build-up in the tubing, and extreme difficulty visualizing the sludge layer at night.

Sludge Blanket Methods Evaluated

ALCOSAN then began evaluating alternative methods of measuring the sludge blanket. Various methods were tested with the Authority deciding to utilize an optic sensing probe and purchased an Ecolotech model 8000 SCCS. This instrument consisted of a probe containing a lamp and photo detector cell, an electrical cable, and a receiving unit containing a speaker, battery and the electronics.

The instrument is very simple to operate. The probe is lowered into the tank while a button is pressed on the receiver. Pushing this button illuminates the lamp. The photocell detects the light and gives an audible signal through the speaker in the receiver. When the probe reaches the sludge blanket, the light beam is interrupted. The photocell no longer detects the light and the audible signal stops. The audible signal is variable and thus the operator is able to detect density variations as the probe is being lowered. With a reference point marked on the electrical cable the operator can measure directly the level of sludge in the tank.

ALCOSAN has placed poles, marked in 6" increments, at each "bombing" station. The cable of the detector was initially marked by lowering the probe to the bottom of the tank and placing a mark on the cable where the cable meets the base of the pole. This point becomes zero blanket depth. As the sludge blanket becomes thicker, the probe will stop sending a signal further above the bottom of the tank, and the mark on the cable will be higher on the pole. If a dowel is placed at the top of the pole and the cable placed over the dowel, the sludge blanket level can be read as the mark on the cable goes up the pole and then down the pole. Blanket levels of zero or 100+ inches can be measured.

Although this unit performed well, repeated use (72/day) of the early model led to mechanical and electrical failures of the unit. The most notable problems were the extensive cracking of the protective cable and twisting/breaking of the electrical wires within the cable. The ease of operation, especially at night, and the tremendous operator acceptance of the device offset these problems and ALCOSAN continued the use of this detector.

In 1988 and 1989, ALCOSAN purchased two armored versions, Model 8002 SCCS. Material and construction modifications with this model have eliminated the aforementioned problems and reduced maintenance to cleaning and battery replacement.

Detector Reevaluated

ALCOSAN recently reevaluated and compared the detector to manual sludge blanket readings taken with the Authority's "bombing stick." Measurements were taken on sludge levels that ranged from 6" to 36". The detector yielded measurements that were the same or 6" greater than the core sampler. These slight differences can be attributed to three factors:

1. This facility determines sludge levels in 6" increments and rounding up or down occurs.
2. Sludge levels are measured at the influent end of the sedimentation tank and this prevents a distinct sludge/liquid interface from forming.
3. Isolation of the sludge in the core sampler permits additional compaction and separation within the tubing.

With accurate measurements of the sludge blanket, operators can be assured of providing "quality" sludge to other process units. These measurements have been easily and accurately obtained through the use of a photo sensing probe. The acceptance of this instrument by the operators has been overwhelming, and this latest model is virtually maintenance free.

For additional information about the application, contact Mr. Bauer at ALCOSAN, 3300 Preble Ave., Pittsburgh, PA 15233, 412/766-4810. For product information, contact Tom Rose, Ecolotech, Box 2470, LaGrange, IL 60525, 708/352-2277.

Reprinted from Pollution Equipment News

151

APPENDIX E

The ultimate dimension in coating thickness measurement

Coating thickness measurement 4 in 1 with the

QuaNix 1500

QuaNix 1500

QuaNix 1500

This combination gauge for coating thickness measurement comprises four gauges - for the price usually paid for one.
Coating thicknesses on ferrous and on non-ferrous substrates in the range from 0.01 to 200 mils.

- ★ No plugs, no cables
- ★ No calibration
- ★ Measuring range from 0 - 200 mils
- ★ Just place and read
- ★ 4 in 1 - for the price usually paid for 1
  The instrument for all applications

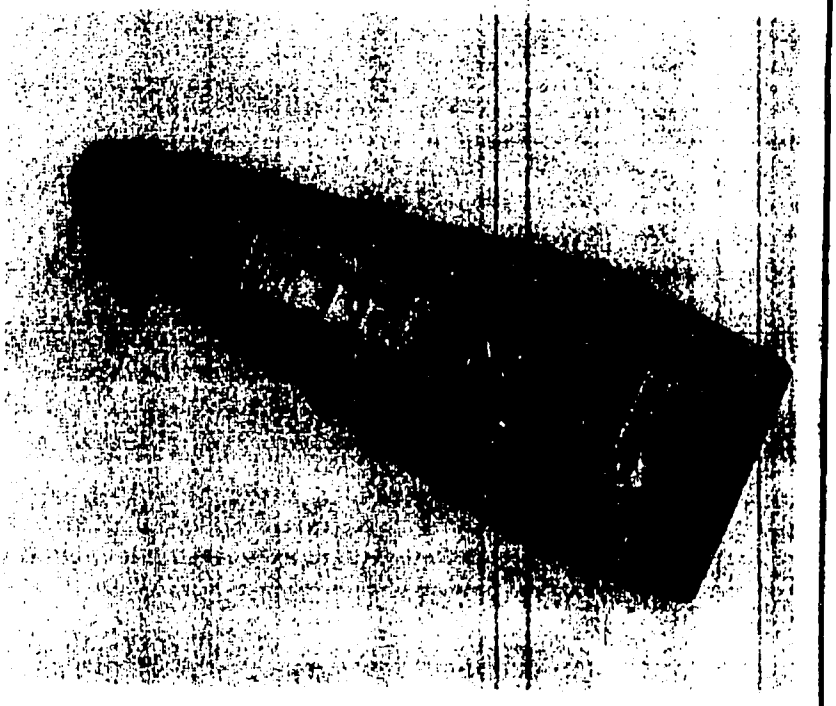

A product of AUTOMATION

153

Technical Data QuaNix® 1500

Substrate:	FE: steel or iron NFE: non-ferrous metallic substrates as aluminum, zinc, copper, brass, stainless steel
Measuring range:	0.01 - 200 mil or 0.0 - 5000 um (convertible)
Display of measured values:	from 0.00 - 200 mil
Resolution:	0.01 mil in the range of 0.00 - 9.99 mil 0.1 mil in the range of 10.0 - 99.9 mil 1 mil in the range of 100 - 200 mil
Repetitive accuracy:	+/- 2 - 5% depending on the measuring range
Basic tolerance:	+/- 0.06 mil
Minimum object size:	0.5 x 0.5 inch²
Minimum curvature:	0.2 inch convex
Minimum substrate thickness:	0.01 inch
Range of temperature:	40° - 120° F
Display:	Digital (LCD)
Probes:	one-point probes, integrated
Power supply:	9 Volt E block (alkaline)
Dimensions:	6.5" x 2.5" x 1.3"
Weight:	4.5 oz. incl. battery

CHARACTERISTICS

The QuaNix 1500 combination gauge, with its two integrated probes, non-destructively measures coatings on both ferrous and non-ferrous substrates. This design, already well known from other gauges manufactured by Automation Koln, makes one-handed operation possible and increases the gauge's reliability under difficult conditions. No cables or plugs are required for operation. Owing to the instrument's wide range and unbeaten measurement resolution, complicated and expensive changes of probes, as well as time-consuming calibration, are not necessary.

There is no on/off switch; the gauge remains active as long as needed. The special design of the instrument, with its duplex display and 10-second retention of the last-measured value, facilitates measurements in hard-to-reach corners.

The gauge is equipped with a non-wearing ruby probe-tip to ensure long life and precision of measurement, even under rough conditions. The "V"-groove facilitates measurements on rods and other curved surfaces. The QuaNix 1500 is powered by a 9-volt battery; special technological advances have made it possible to take several thousand measurements with a single battery.

AUTOMATION USA Box 563 Westminster, MD 21158-0563 1-800-678-4370

154

AUTOMATION USA

PRICE LIST

MAKE	MODEL	UNIT PRICE
QuaNix	1500	$ 749.00
QuaNix	1500 With Memory	$ 990.00 (Including Software)
QuaNix	2200	$ 650.00
QuaNix	2300	$ 795.00
QuaNix	7200	$ 625.00
QuaNix	7200 With Memory	$1050.00 (Including Software)
QuaNix	7300	$ 770.00
QuaNix	7300 With Memory	$1175.00 (Including Software)

Shipping and handling: For overnight shipment, add $15.00
For 2nd day shipment, add $ 7.00
For regular ground, add $ 5.00

Payment: Terms - Net 30 Days
C.O.D.
Purchase Order required for 30-day terms

Warranty: 12 months on all gauges

CALL TOLL-FREE 1-800-678-4370 FOR MORE INFORMATION

3/1/95

Box 663 Westminster, MD 21158-0663 1.800.678.4370 Fax: 410.857.3818

155

Metorex

March 16, 1995

Jennifer Hopman
World Environment Center
419 Park Ave. S.
18th Floor
New York, NY 10016

Dear Jennifer:

We would like to thank you for your interest in our COURIER family of on-line x-ray fluorescence analyzers. Please find enclosed literature on our XRF analyzers.

We are the leader in on-line x-ray analysis. Our analyzers are designed for harsh process environments. This insures that our analyzers spend their time monitoring and controlling your processes. Our parent company, Metorex Int'l Oy who manufactures the COURIER, X-MET (bench-top XRF analyzers) and METOR (security products) line of products, is ISO 9001 Certified. We pride ourselves in our commitment to customer support and product quality.

In addition we can offer customized analyzers for your specific application. Our analyzers can measure elements from Mg to [illegible]. Our systems are well engineered packages backed up by worldwide service, parts and support.

Please fill out the enclosed Application Evaluation Form and fax it back to Rick Lawrence at (215)741-6385. Once we have this information, we can give you more specific information on your application and at that time provide you with a budgetary pricing.

We are looking forward to working with you in the future. If you require further information or if you have any questions, please call Rick Lawrence or myself.

Sincerely,

Holly

Holly J. Davis
Analytical Systems

Encl.

METOREX INC.

Street address
860 Town Center Drive
Langhorne, PA 19047

Telephone
1-215-741-4482

Telefax
1-215-741-6385

- 156

Metorex

METOREX ON-LINE FEASIBILITY STUDIES
APPLICATION EVALUATION FORM

PLEASE FILL OUT BOTH PAGES OF THIS FORM SO THAT WE CAN EVALUATE THE POTENTIAL OF YOUR APPLICATION WITH METOREX ON-LINE ANALYZERS. IF CONDITIONS ARE FAVORABLE, ADDITIONAL INFORMATION WILL BE PROVIDED TO HELP YOU PREPARE FEASIBILITY STUDY SAMPLES.

CONTACT: _____

COMPANY NAME: _____

ADDRESS: _____

TEL: _____ FAX: _____

==========

SAMPLE TYPE:

CLEAR LIQUID:_____ SLURRY:_____ POWDER:_____ GRANULAR:_____

LIQUID WITH PARTICULATES (LIQUID MEASURE):_____

OTHER: _____

==========

ELEMENTS OR MINERALS TO BE MEASURED:

ELEMENT	CONCENTRATION RANGE	COATING THICKNESS	DESIRED PRECISION

OTHER ELEMENTS/MINERALS PRESENT & THEIR CONCENTRATION RANGES:

_____

_____

_____

MAXIMUM TIME BETWEEN ANALYSES: _____

METOREX INC.

Street address
860 Town Center Drive
Langhorne, PA 19047

Telephone
1-215 741-4482

Telefax
1-215-741-6385

157

COURIER® 8

A LOW COST ON-LINE XRF ANALYZER

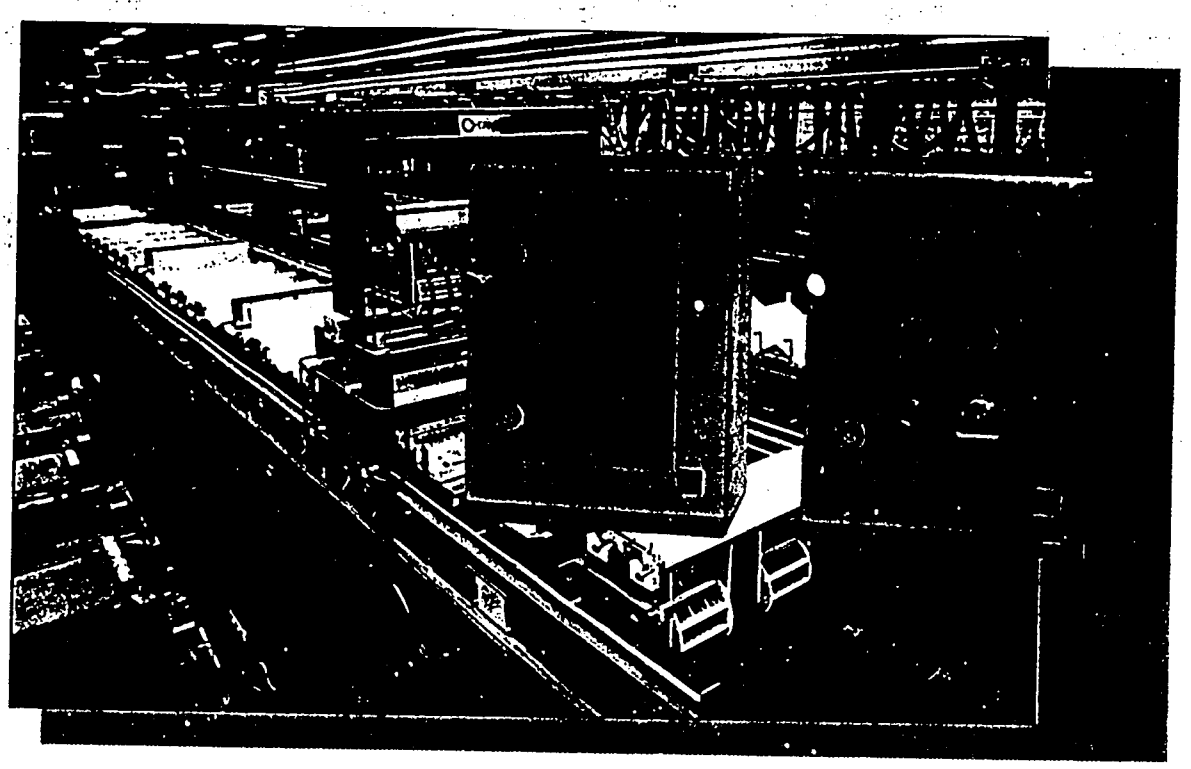

COURIER 8 is a low cost x-ray fluorescence (XRF) analyzer for the plating, coating and chemical industries. It utilizes proven XRF technology that incorporates matched radioisotope X-ray sources with proportional counter detectors. This assures unsurpassed analytical performance. The rugged design of the **COURIER 8** provides reliable, accurate, real time analyses for process and quality control. The modular Cell Box is mounted at each sample point avoiding long and expensive piping systems. The main Electronics Unit can be placed anywhere for easy centralized control. Easily programmed measurement sequencing and timing optimize analysis time when multiple Cell Boxes are used. The **COURIER 8** modular design allows for easy expansion as your analytical needs grow.

Metorex

158

The All New COURIER 8-SA On-line XRF Analyzer for Surface Analysis !!!

Introduction

Metorex (ISO 9001) has developed a unique on-line analyzer which measures for surface coatings and impregnated sheet samples. The COURIER® 8-SA On-line Surface Analyzer can measure elements from Silicon to Uranium on the Periodic Table. The techniques employed are X-ray Fluorescence and X-ray Backscatter. On-line analysis of surfaces and impregnated materials facilitates process control and improves quality enabling tighter control, improved product quality, reduced rework and increased throughput.

The COURIER 8-SA was a joint development project. The partnership, formed among R&D, product development and end users, created the COURIER 8-SA, a refined true process analyzer meeting the needs and specifications of the coating, petrochemical and paper industries.

The Analyzer

The COURIER 8-SA is a rugged process analyzer designed for the rigors of industrial use; it is not a modified laboratory unit. The analyzer is simple to use and operate. It provides real-time data for continuous control of processes whether for the paper industry, the electronics industry or unique coated and impregnated materials. The COURIER 8-SA is equipped with analog and serial data transfer protocols.

The Measuring Probe is mounted in either a fixed position or it can traverse across the production line. Neither option contacts the sample. Because of its unique design, up to six Measuring Probes can be multiplexed to the Electronics Unit to measure multiple samples in various locations in the plant. Simply run a cable (up to 65') from the Probe to the Electronics Unit.

The COURIER 8-SA was designed for multiplexing various sample types, too... Since the basis of the COURIER 8-SA is the versatile and reliable X-MET® 880, the analysis of surfaces can be performed in conjunction with on-line liquid analysis and even lab samples using "sample cup probes". The benefit is, when coating from a mixing tank, the tank can also be monitored as well as performing other at-line analyses.

The COURIER 8-SA is a microprocessor based analyzer using simple three letter commands to control the analysis. For example, CAL for calibrate, CMS for Continuous Measurement, SEQ for sequencing the samples being measured.

The Analysis

Elements from silicon to uranium on the Periodic Table are easily and precisely analyzed. Typical standard deviations are less than three percent relative for surface analyses and less than one percent relative for solution analyses. The measurement times are typically between two and five minutes. For optimum precision the measurement time on the COURIER 8-SA can be configured for any counting time. The RMS Error is typically less than three percent depending upon the quality of standards used to calibrate the analyzer.

Once it is calibrated, the COURIER 8-SA holds the calibration in memory and does not need frequent recalibration. In fact, the analyzer can store up to 32 different methods for maximum versatility and effectiveness. Internal software maintains all stored calibrations for any changes in

DeFelsko®
CORPORATION

15 March, 1995

Jennifer Hopman
World Environment Center
419 Park Avenue South
Floor 18
New York NY 10016

Dear Ms. Hopman:

Thank you for your telephone call today. As requested, enclosed is descriptive literature providing you with further details on our Coating Thickness Gages. The following is a brief summary of our product line.

PosiTector 100: the world's first and only non-destructive, hand-held coating thickness gage designed specifically to measure coatings on concrete, wood, glass, plastic and more.

PosiTector 6000: Simple -- one-hand operation -- no calibration necessary.

F models: for non-magnetic coatings (e.g. paint and plating) on steel

N models: for non-conductive coatings (e.g. paint, epoxy, anodizing) on non-ferrous metals

FN models: measure coatings on **all** metals with only **one** probe. These -- *smart* -- rugged gages automatically know whether your substrate is ferrous or non-ferrous, eliminating confusion and operator error.

PosiTest: the industry standard, for measuring non-magnetic coatings (paint, plating, galvanizing, etc.) over steel. Features a Carbide Probe Tip to prevent wear and a Rare Earth Cobalt Magnet that cannot be magnetically altered.

PosiPen: has the smallest magnet of any coating thickness gage and is perfect for measuring small, hot or hard-to-reach ferrous areas with pin-point accuracy.

All gages are in stock and ready for immediate shipment by UPS. If you have questions or wish to order, call TOLL-FREE 1-800-448-3835.

Sincerely,

D J Beamish

David Beamish - Technical Sales
Encl. Gage Literature (w), Price List

worldenv.L01 MAC

802 Proctor Avenue • P.O. Box 676 • Ogdensburg, New York 13669-0676 USA
Phone 315-393-4450 • Fax 315-393-8471

160

PosiTector® 6000

Worldwide Leader in Coating Thickness Gages

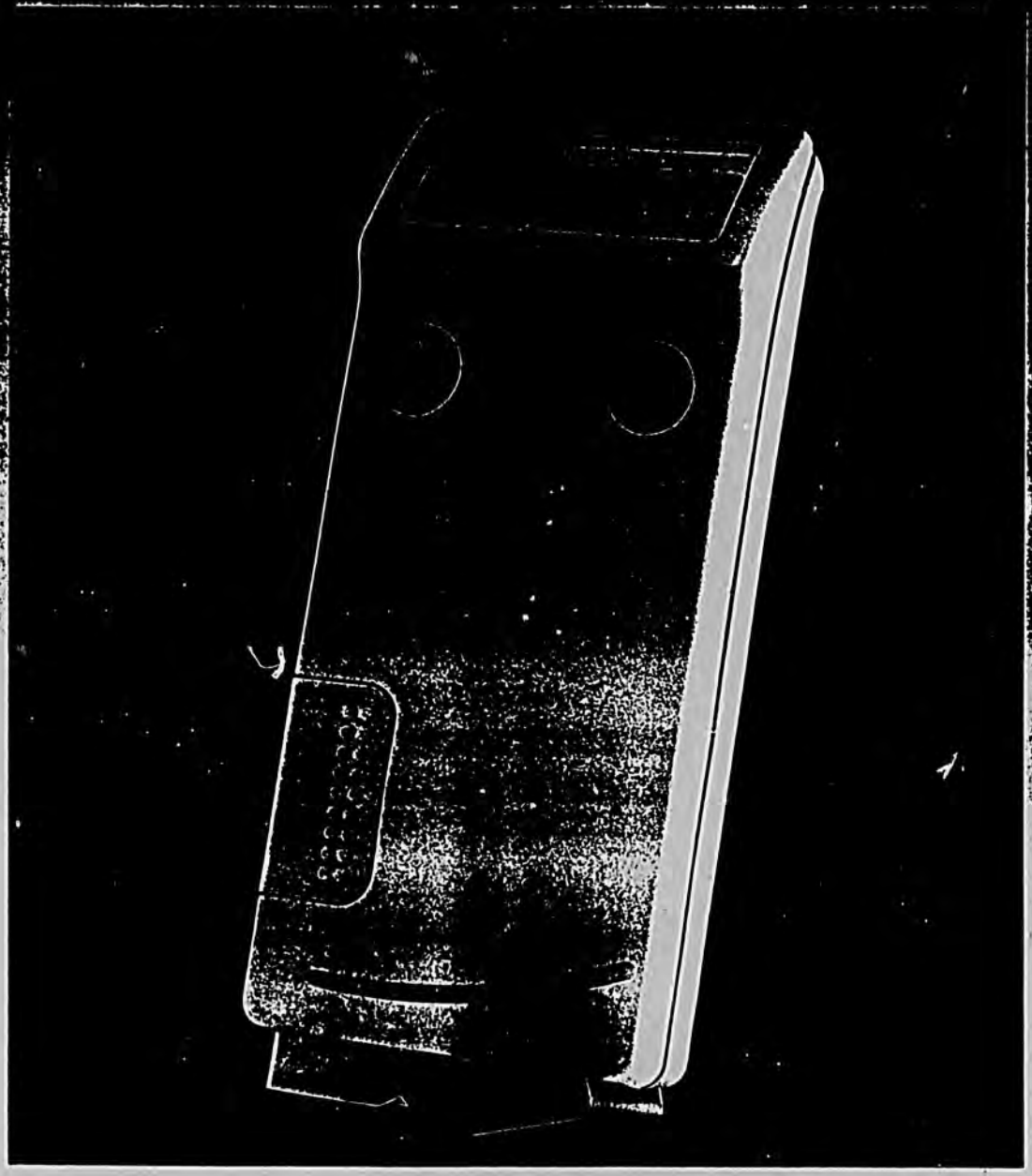

These rugged, fully electronic gages non-destructively measure coatings on both FERROUS and NON-FERROUS metals accurately and quickly.

Available in BASIC, STATISTICAL or MEMORY versions.

Simple one-hand operation

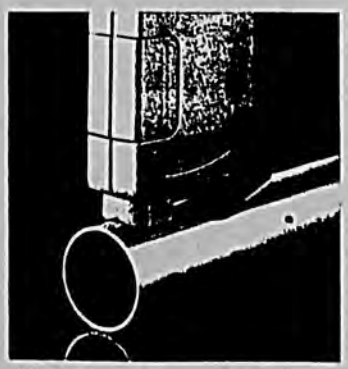

Also ideal on round stock

161

New

PosiTector® 100

Worldwide Leader in Coating Thickness Gages

These rugged gages easily and accurately measure coatings on concrete; paint and lacquer on wood; paint on plastic; paint on glass; glazing on ceramic; and more!

Available in BASIC, STATISTICAL or MEMORY versions.

Also ideal for measuring floor coatings.

-162

PosiTest®

Worldwide Leader in Coating Thickness Gages

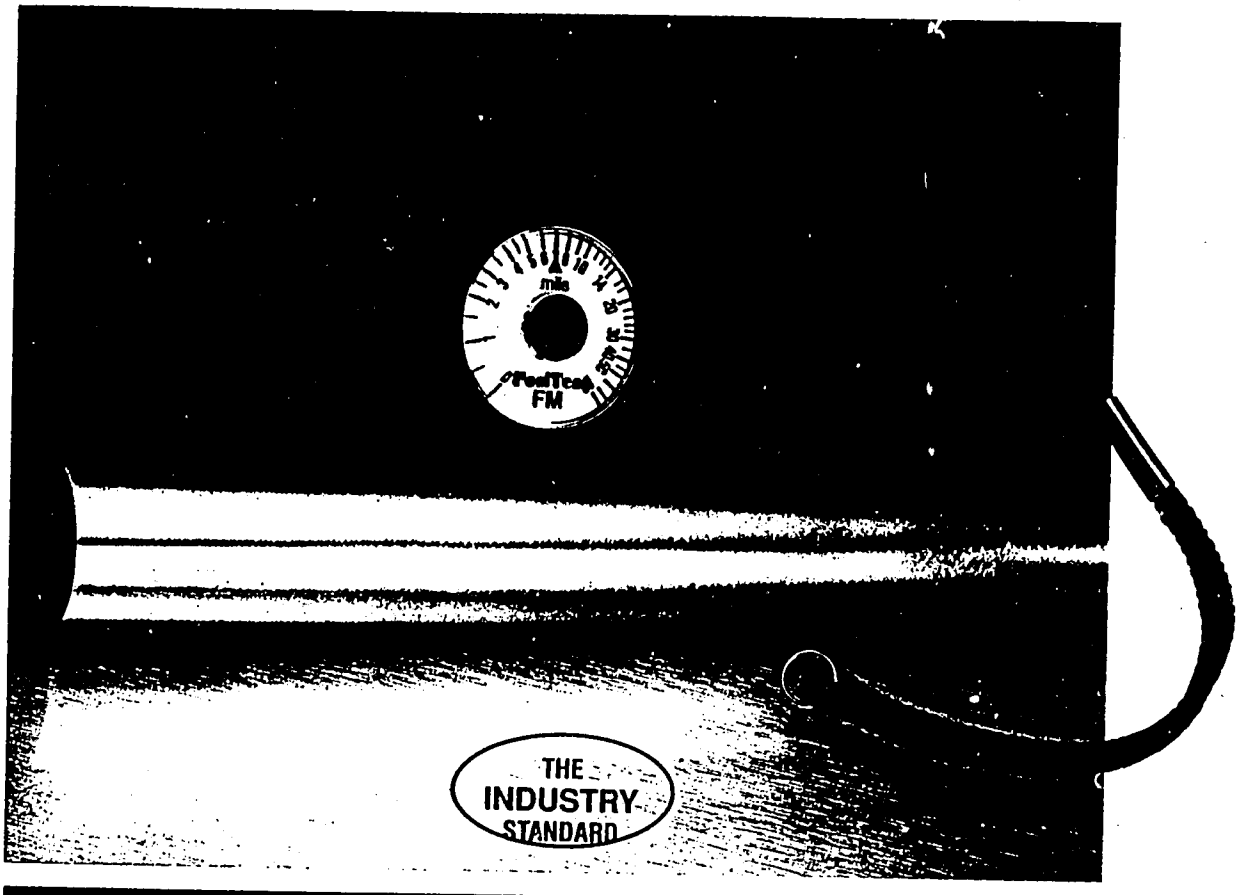

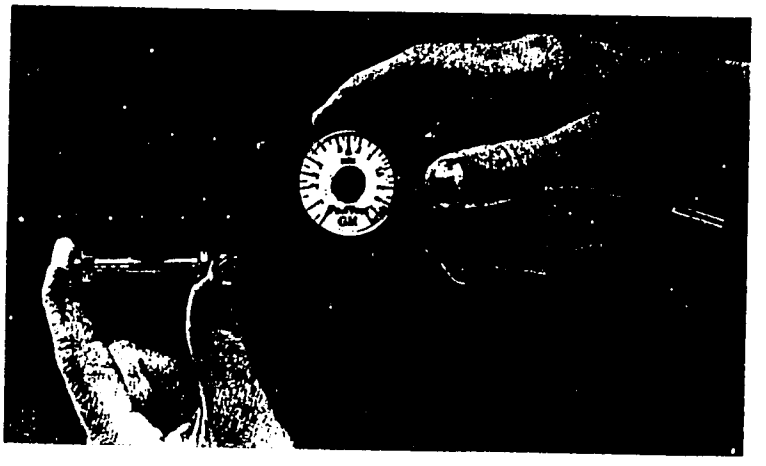

For the non-destructive measurement of non-magnetic coatings such as (paint, enamel, plastic, galvanizing, metalizing, plating, etc.) on STEEL.

▲ Easily measures small parts of almost any shape.

Stable design with additional tail-end support. Will not rock like other gages of this type. ►

NEW

PosiPen™

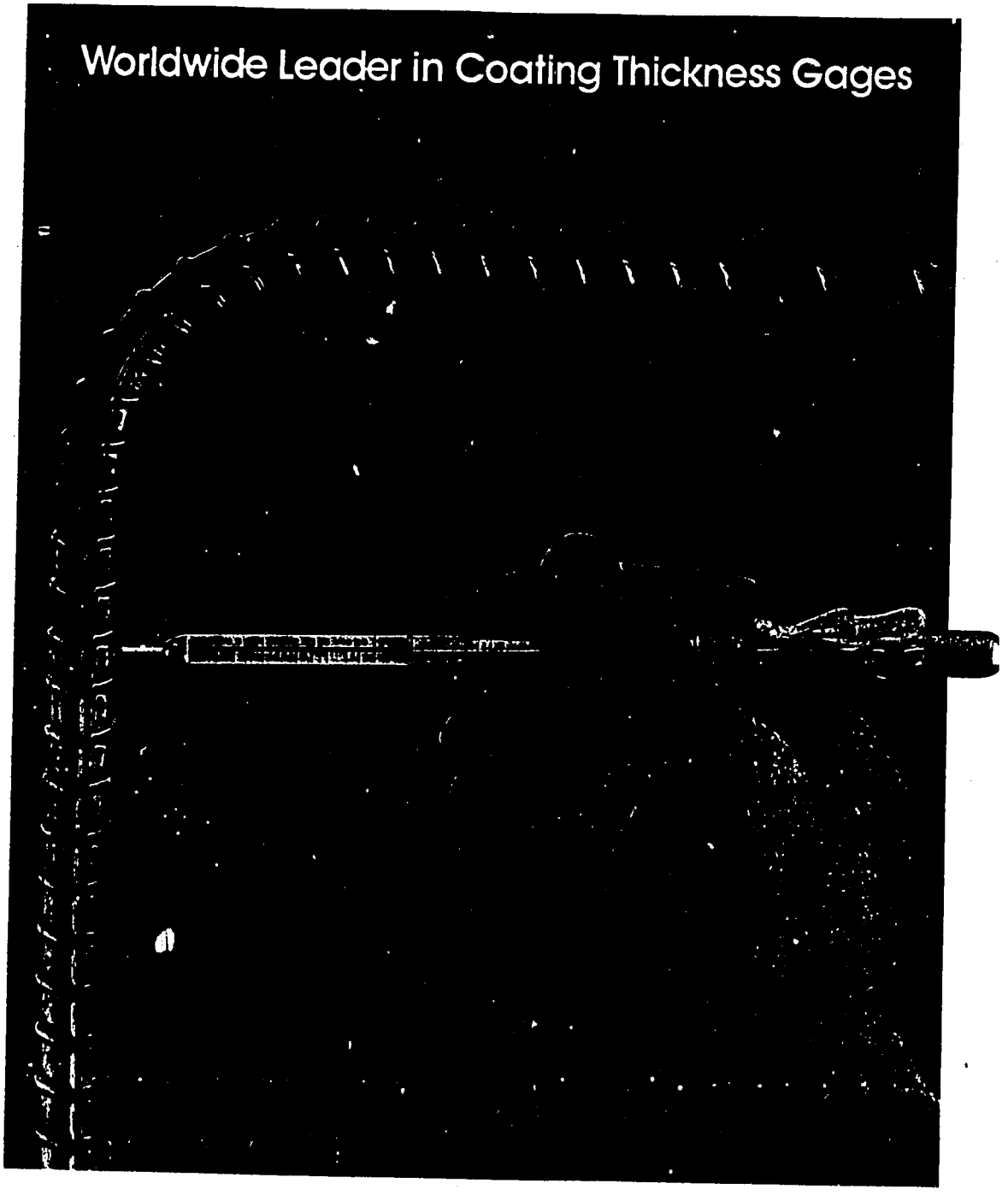

Measures non-magnetic coatings such as paint, enamel, plating, hot-dip galvanizing on steel.

Ideal for measuring on small, hot or hard-to-reach surfaces.

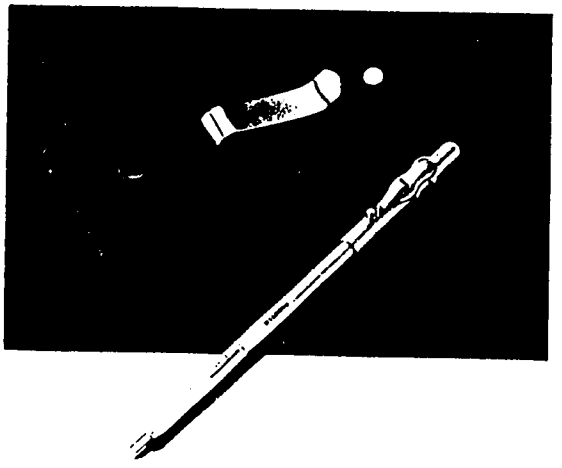

164

NEW

PosiPrinter®

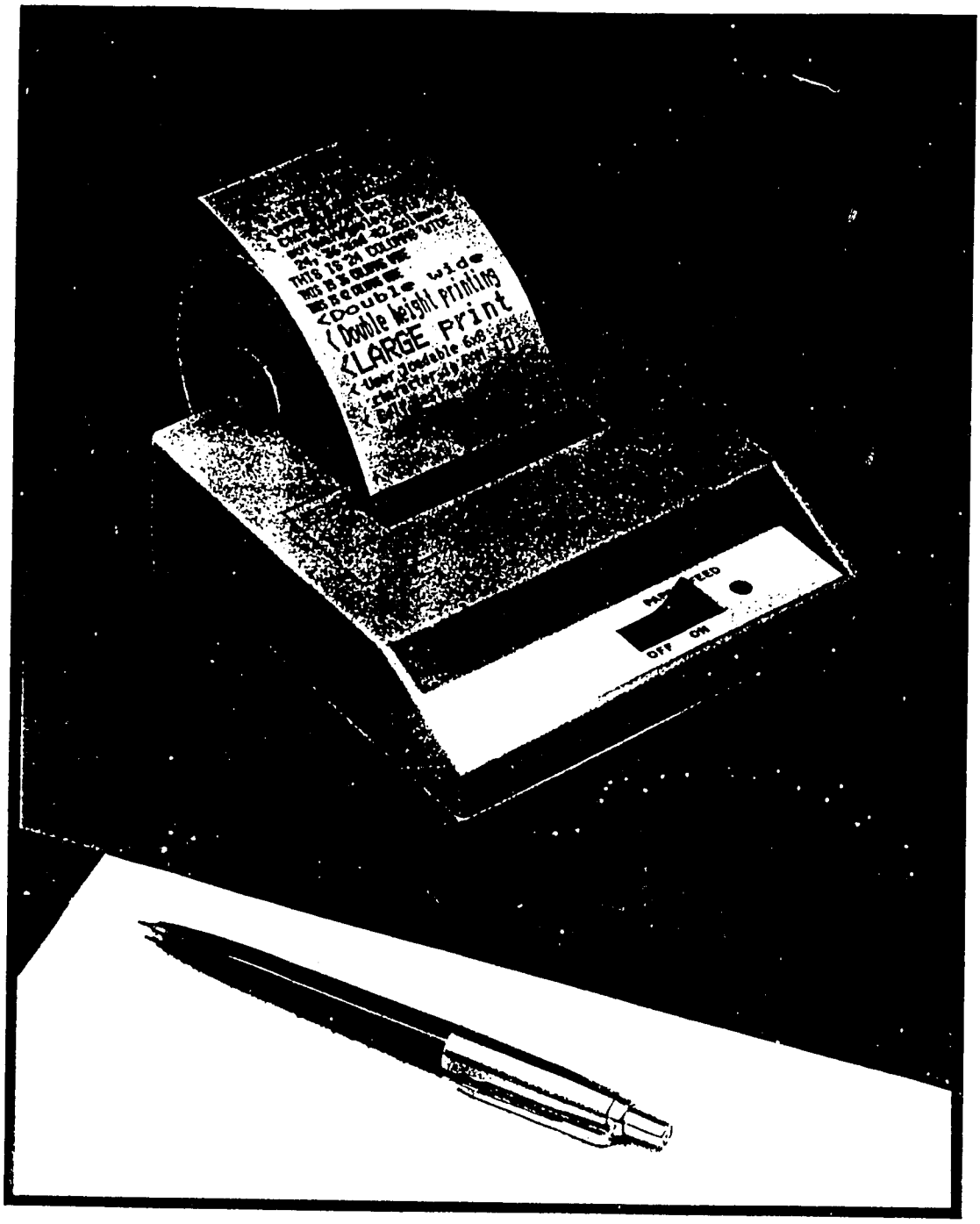

Here is a dependable dot matrix printer that replaces bulky, expensive printers and will print up to 76 lines a minute.

PRICE LIST

POSITECTOR® 6000

INTEGRAL PROBE MODELS	SEPARATE PROBE MODELS	RANGE	COATING and SUBSTRATE	OPTIONS	INTEGRAL PROBE MODEL PRICE	SEPARATE PROBE MODEL PRICE
F1	FS1	0 - 60 mils	non-magnetic	basic	645.00	695.00
F2	FS2	&	on	standard	745.00	795.00
F3	FS3	0 - 1500 µm	ferrous	memory	1,045.00	1,095.00
N1	NS1	0 - 60 mils	non - conductive	basic	745.00	795.00
N2	NS2	&	on	standard	845.00	895.00
N3	NS3	0 - 1500 µm	non - ferrous	memory	1,145.00	1,195.00
FN1	FNS1	0 - 60 mils		basic	1,245.00	1,295.00
FN2	FNS2	&	BOTH	standard	1,345.00	1,395.00
FN3	FNS3	0 - 1500 µm		memory	1,645.00	1,695.00
FT2		0 - 250 mils	THICK non-mag.	standard	845.00	
FT3		& 0 - 6 mm	on ferrous	memory	1,145.00	
NA2	NAS2	0 - 2 mils &	non-conductive on	standard	1,045.00	1,095.00
NA3	NAS3	0 - 50 µm	non-Fe (Anodizing)	memory	1,345.00	1,395.00

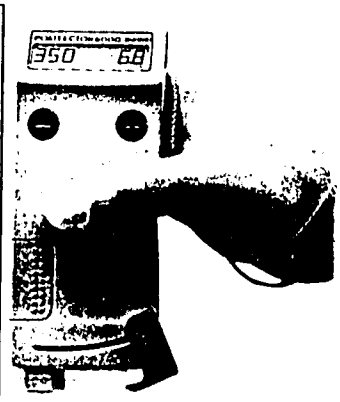

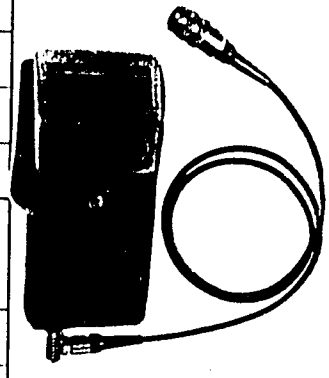

TRADE-IN DISCOUNT: **20%**

All gages come complete with Precision Plastic Shims, batteries, instructions and leather pouch.
Memory models also include 3½" diskette software and serial cable for printer or computer.

POSITECTOR® 100

MODEL	RANGE	COATING / SUBSTRATE	OPTION	PRICE
100-C1	0.5 - 750 mils	Measures coatings on	basic	2,895.00
100-C2	&	concrete, wood, glass	standard	2,995.00
100-C3	10 µm - 20 mm	plastic and more.	memory	3,295.00

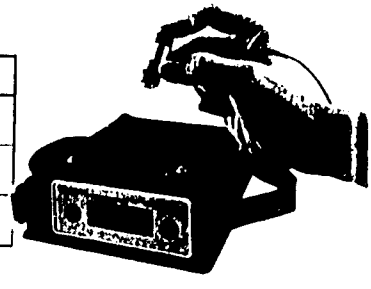

All gages come complete with Probe, cable, Precision Plastic Shims, batteries, instructions, leather pouch & Ultrasonic Gel.
Memory models also include 3½" diskette software and serial cable for printer or computer.

MAGNETIC PULL-OFF GAGES

MODEL	RANGE	APPLICATIONS	PRICE
PosiPen A	0.25 - 20 mils &	small, hard-to-reach surfaces	225.00
PosiPen B	5 - 500 µm	EXTREME temperature surfaces	275.00
PosiTest GM	0 - 8 mils	electroplating, thin paint films, phosphating	330.00
PosiTest G	0 - 200 µm		
PosiTest FM	0 - 80 mils	paint, hard chrome, hot-dip galvanizing	
PosiTest F	0 - 2000 µm		

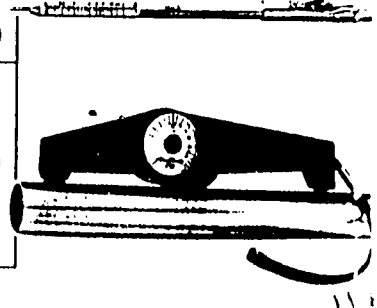

TRADE-IN DISCOUNT: **20%**

November 1, 1994

Over ⇒

APPENDIX F

Model 671 pH and ORP Analyzers

pH/ORP

Data Sheet 671PR/792
Supersedes 671PR/1091

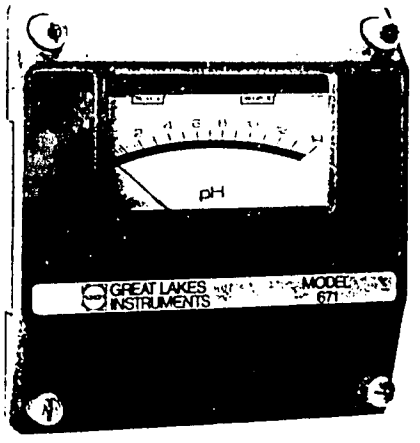

FEATURES

- 1/2 DIN, NEMA 4X enclosure
- Universal mounting
- Relays operate on increasing or decreasing reading, switch selectable
- Economical — ideal for custom system designs
- Modular construction simplifies field servicing

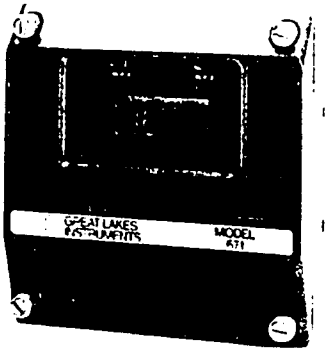

With Optional LCD Readout

Description:

Model 671P pH and 671R ORP analyzers fulfill three basic needs at low cost: accurate measurement, on/off relay control and analog outputs. The compact plastic enclosure is rated NEMA 4X and conforms to 1/2 DIN size standards. The instrument may be panel, surface or pipe mounted using the two stainless steel brackets provided. A certification option is available for these analyzers by CSA for general purpose use. Each analyzer may be used with a GLI 5-wire Differential Technique* sensor or a conventional combination electrode. Measurement readings are displayed on a 3-1/2 inch analog meter. An optional digital LCD readout is available.

Each type of analyzer has non-isolated 0-1 mA/0-5 VDC and 4-20 mA analog outputs. Isolation for the 4-20 mA output is optional. A range expand feature allows the 4-20 mA output to represent a segment as small as 10% of the measuring scale span. This feature may be used as a proportional controller for simple proportional control applications. Setpoint and gain controls establish the 4-20 mA controller output over the range of interest to regulate a proportioning final control element (valve or pump). A DIRECT/REVERSE jumper selects the direction of controller action. The analyzer may be ordered with an optional pulsed, contact closure output instead of the 4-20 mA output to operate variable speed, pulse-driven pumps. A choice of between 70 and 120 pulses per minute maximum output is available. The output pulse is 50 milliseconds with the pulse frequency proportional to 0-100 percent of the controller output.

Each analyzer has two relays (each with setpoint and deadband adjustments) which can be independently configured to operate in response to increasing or decreasing reading. An AUTO/OFF/MAN mode switch offers added control flexibility for one of the relays. A "dual-alarm" feature enables the other control relay to operate as an alarm relay with separate high and low alarm points. This will provide an alarm whenever the reading is outside the preset points.

*U.S. Patent 3862895

SPECIFICATIONS▲

OPERATIONAL:

Display	3-1/2 inch analog meter or optional backlit LCD readout with 1/2" high digits
Measuring Range	pH: 0-14; ORP: (–)1000 to (+)1000 mV
Ambient Conditions	-30 to 50°C (-22 to 122°F), 0 to 100% R.H. non-condensing
Relay Function: Control Setpoints	Continuously adjustable, 0-100% of full scale
Control Deadbands	Continuously adjustable, 0-15% of full scale
Dual-Alarm Feature	Individually adjustable high and low alarm points (0-100% of full scale) each with 2% fixed deadband
Indicators	LED lights when respective relay turns on
Contact Rating	SPDT, 5A 115/250 VAC, 5A @ 30 VDC resistive

NOTE: *Relays operate in response to increasing or decreasing reading, switch selectable.*

Proportional Controller: Setpoint	Anywhere on scale	
Proportional Gain	1 to 10	
Controller Output (uses analog output)	Current:	4-20 mA, 825 ohms max. load (drives 20-500 ohm loads when isolated)
	–or–	
	Pulsed:	Dry contact closure, 70 to 120 pulses/minute maximum (set to 100 unless specified), 50 millisecond contact closure, pulse frequency is proportional to 0-100% of the controller output. Contact rating is 200 VDC, 1/2 amp. DC, 10 W max.
Temperature Compensation	Automatic 0-100°C (32-212°F), 300 ohm thermistor	
Sensor-to-Analyzer Distance	3000 feet max. for GLI 5-Wire Differential Technique sensor; 10 feet max. for direct connection of conventional combination electrode (Model 714 preamplifier is required for distances greater than 10 feet)	

▲ Subject to change without notice.

SCHOTT GREAT LAKES INSTRUMENTS

168

Power Requirements ..... 98-132 VAC, 50/60 Hz (less than 5 VA), optional 195-265 VAC, 50/60 Hz, connections via terminal strip
Analog Outputs: Standard ..... Non-expandable and non-isolated‡: 0-1 mA, 100 ohms maximum load or
0-5 VDC, 500K ohms minimum load
Expandable and non-isolated‡: 4-20 mA, 825 ohms maximum load
Optional ..... Isolation‡ for expandable 4-20 mA output only, drives 20-500 ohm loads

Range Expand – The 4-20 mA output can be made to represent a selected segment of the display scale. This segment cannot be smaller than 10% of the measuring scale span, but may be positioned anywhere within that span.

‡Non-isolated outputs are isolated from ground and line power, but not from the input or each other. The isolated output is isolated from the input, ground, line power and all other outputs.

Electrical Certification (optional) ..... CSA: General Purpose

ANALYZER PERFORMANCE (Electrical, Analog Outputs)

Sensitivity ..... 0.1% of span
Stability ..... 0.1% of span per 24 hrs., non-cumulative
Non-Linearity ..... 0.05% of span
Repeatability ..... 0.1% of span
Temperature Drift ..... Zero: 0.01% of span/°C; Span: 0.015% of span/°C
Response Time ..... 3 seconds to 90% of value upon step change

MECHANICAL:

Enclosure ..... NEMA 4X, 1/2 DIN, polycarbonate with two 1/2-inch conduit holes and SS mtg. brackets
Mounting Configurations ..... Surface, panel and horizontal pipe mount. Vertical pipe mounting optional.
Net Weight ..... 3 lbs. (1.36 kg) approx.

ORDERING INFORMATION

MODEL NUMBER
671P pH } Analyzer in NEMA 4X, 1/2 DIN enclosure with stainless steel mounting
671R ORP } brackets

DISPLAY (Specify measuring range from right)
1 Analog meter 3 Digital LCD

ANALOG OUTPUT (Non-isolated 0-1 mA/0-5 VDC plus:)
C Non-isolated 4-20 mA P Pulsed, contact closure (specify max. pulses/minute; 70 to 120)
F Isolated 4-20 mA

LINE VOLTAGE
1 115 volts, 50/60 Hz 2 230 volts, 50/60 Hz

RESERVED CATEGORIES

AGENCY CERTIFICATION
Blank No Approval
CSA CSA Certified

G0N – [ ] **Product Number**

Choose one from each category.

Standard Measuring Ranges

pH: 0-10, 0-14, 2-12, 4-10 and 4-14

ORP: 0-250, 0-500, 0-1000, (–)500 to (+)500 and (–)1000 to (+)1000 mV

Accessories (ordered separately):

- **Sensors** – Refer to data sheets LCP, Epoxy, 6000P0, FR, FTA, SS, and 6300.
- **99X1W1055 Interconnect Cable** (6-wire, 5 cond. plus shield)

DIMENSIONS AND MOUNTING

Inches (mm)

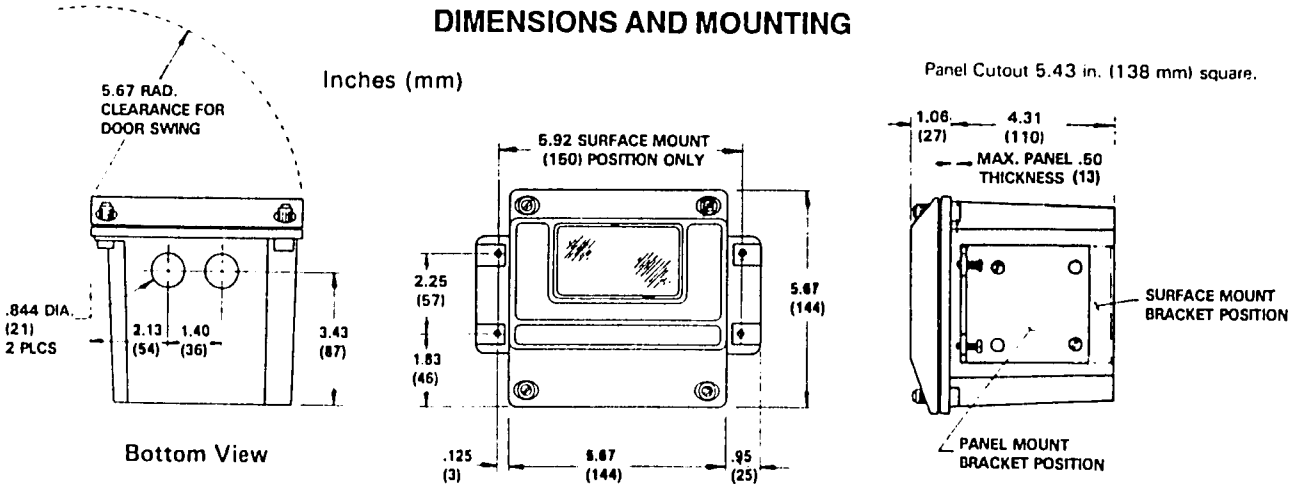

Represented By:

Great Lakes Instruments, Inc.
8855 N. 55th Street
Milwaukee, WI 53223

Telephone (414) 355-3601
Telefax (414) 355-8346

GREAT LAKES INSTRUMENTS

A Schott Group Company

Data Sheet 671PR/Printed in U.S.A.

Model 672 pH and ORP Analyzers/Controllers

pH/ORP

Data Sheet 672PR/692
Supersedes 672PR/292

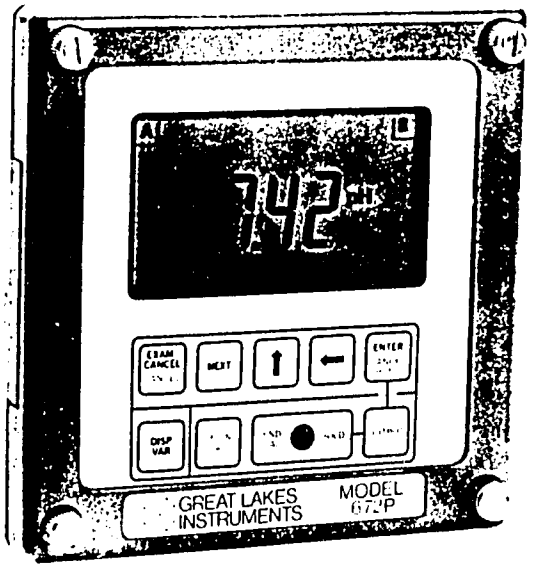

FEATURES

- Readouts for pH, temperature, mV and mA output
- Single or two-point automated calibration
- Automatic recognition of pre-selected buffer values
- Two relays with programmable operating modes
- Diagnostic error messages identify abnormal conditions
- Remote calibration capability
- Proportional control capability

Introduction

The Models 672P pH and 672R ORP analyzers provide accurate measurements, flexible on/off relay control, and proportional control capability along with other useful features that only a microprocessor-based instrument can provide. A certification option is available for these analyzers by CSA for general purpose use. The instrument accepts two types of sensor inputs: a GLI 5-wire Differential Technique sensor or a conventional combination electrode with integral or separate temperature sensor. A 300 ohm thermistor or 1000 ohm RTD temperature sensor can be used.

Display Capability

The 672P has a large liquid crystal display. Four measured variables can be alternately displayed: pH, temperature (in °C or °F), the sensor's mV signal and the 4-20 mA instrument output. Indication for the 672R is similar except there is no pH readout.

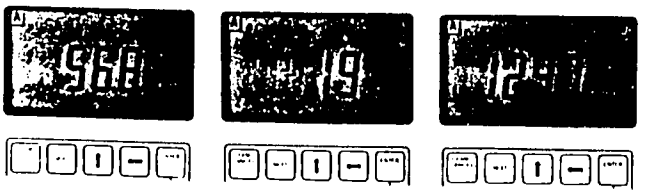

Also displays °C or °F, mV and 4-20 mA output

Clear, easily understood messages prompt the operator when calibrating and configuring the instrument. During operation, status annunciators inform the operator of the instrument's operating state. System diagnostic codes flash automatically, without operator interaction, whenever the instrument detects abnormal conditions.

User-Friendly Operation

The 672 is simple to operate. A watertight keypad is used to configure, calibrate and call up stored values without having to open the door. When EXAM/CANCEL is pressed while the display is in the measurement mode, the readout changes to an "examination" mode to show the first setup variable and its stored value. Pressing the NEXT key displays the next setup variable. The UP and LEFT arrow keys change the displayed value to a new value. Pressing ENTER stores the displayed value in memory. The EXAM/CANCEL key returns the display to its normal measurement mode without changing the stored value.

SCHOTT GREAT LAKES INSTRUMENTS

170

An internal battery retains all values in memory for up to 5 months (at 25°C) even if power is lost or turned off. The 10-year battery is continually trickle-charged whenever power is applied.

To prevent unauthorized alteration of stored setup values, the 672 has a selectable lockout feature. For operator convenience, all stored and measured data may be displayed and instrument calibration can be performed while in the "lock" mode. Special codes lock and unlock stored values.

Calibration Methods

To accommodate your specific needs, the 672P can be calibrated a number of different ways. Conventional single and two-point methods can be used where the operator enters the buffer values into the instrument memory. Two alternate "two-key" calibration methods are also possible which are especially convenient for the novice operator because they eliminate the need for that person to enter buffer values. The only operator requirement is that the sensor must be in the appropriate buffer for each calibration point. Calibration starts when the BEGIN CAL key is pressed. The instrument compares the stability of the pH and temperature inputs to a preselected rate setting. When both inputs are stable (changing less than the selected rate) and the pH is within an acceptable range, the instrument prompts the operator to complete calibration of that point by pressing the END CAL key. (To prevent accidental calibration from occurring, this key must be pressed using a slender tool that fits through an access hole in the keypad.) Two known pH values can be keyed in during startup, or a buffer table lookup method can be used. The table contains 14 specific buffer formulations and will yield the best instrument calibration.

The 672P can be calibrated remotely via switch closure inputs using the buffer table method. A remote programmable controller is required to signal the start of a calibration procedure to introduce appropriate buffers and cleaning solutions to the sensor.

Analog Outputs

Isolated instrument outputs proportional to the measured value include 0-5 VDC, 0-1 mA and 4-20 mA. A range expand feature allows these outputs to represent a one pH unit or larger segment of the measuring scale (50 mV segment for Model 672R). Also, the outputs may be configured to be direct or reverse acting to provide a proportional control output.

An output hold feature can be used to maintain the latest output during calibration or while configuring the instrument. This feature can be activated via the 672 keypad or from a remote location by an LSTTL-compatible (active low) or switch closure input signal connected to dedicated 672 terminals.

Flexible Relay Control

The instrument has two fully programmable relays. The configuration flexibility for these relays meets virtually any on/off control or alarm application requirement in a single instrument. Relays A and B can be independently set up to operate in a control mode or an alarm mode. In the control mode, the relay can be selected to operate in response to increasing or decreasing measured value and has a setpoint and deadband. When a relay is set up for the alarm mode, the relay operates as a "dual-alarm" relay with independent low and high alarm points. In this mode, the relay will transfer whenever the measured value decreases below the low alarm point or increases above the high alarm point. In either mode, both relays can be selected for "fail-safe" operation which reverses normal operation so that the relays will deenergize in the event of a power failure.

Lastly, Relay B can be programmed to function as a "system diagnostic alarm" to alert the operator of improper system operation or system failure. This system alarm mode setup overrides the relay's normal control or alarm operation.

Versatile Installation

The Model 672 is housed in a compact NEMA 4X, plastic enclosure which conforms to 1/2 DIN size standards for panel mounting. The corrosion-resistant case has a hinged door which can be opened or easily removed to facilitate installation and servicing. Four screw-type fasteners provide quick access. Two stainless steel brackets are included for surface, panel or horizontal pipe mounting. Hardware for vertical pipe mounting is available as an option.

Hazardous Duty Capability

The 672P and 672R analyzers can be special ordered for use in Division 2 hazardous environments. Consult factory for details.

SPECIFICATIONS*

OPERATIONAL:

Display ..... 4-1/2 digit LCD with measurement unit and setup variable identifiers, 7/8" high digits

Measuring Range: Model 672P ..... 0.00 to 14.00 pH, (–)500 to (+)500 mV and (–)10.0 to (+)110.0°C

Model 672R ..... (–)2000 to (+)2000 mV and (–)10.0 to (+)110.0°C

Ambient Conditions ..... –30 to 50°C (–22 to 122°F), 0 to 95% R.H. non-condensing

Relay Function: Operating Modes ..... Control: Setpoint with adjustable deadband and selectable operation in response to increasing or decreasing measured value.

Alarm: Dual-alarm relay operation with low and high alarm points and fix deadbands (0.1 pH for 672P and 10 mV for 672R).

Fail-Safe: Reverses normal operation of Relays A and B (in control, alar or system alarm mode) so that relays will deenergize when a power interruption occurs.

System Alarm: Relay B transfers whenever instrument detects a system diagnostic error (out-of-range pH and/or temperature inp or memory loss). This mode overrides normal control or alarm operating mode.

Indicators ..... Relay A and B annunciators flash to indicate respective relay status

Outputs ..... Two SPDT contact outputs, U.L. rating: 5A 115/230 VAC, 5A @ 30 VDC resistive

Temperature Compensation ..... Automatic 0-100°C (32-212°F), 300 ohm thermistor or 1000 ohm platinum RTD temperature sensor, switch selectable

Sensor-To-Analyzer-Distance ..... 3000 feet max. for GLI 5-wire Differential Technique sensor; 10 feet max. for direct connection of conventional combination electrode (a GLI Model 714 preamplifier is required for distances greater than 10 fe

Power Requirements ..... 98-132 VAC, 50/60 Hz. (less than 5 VA); optional 196-264 VAC, 50/60 Hz

Remote Output Hold ..... LSTTL-compatible (active low) or switch closure input

Analog Outputs‡ (with output hold feature) ..... Isolated 0-1 mA, 100 ohms maximum load
Isolated 0-5 VDC, 1000 ohms minimum load
Isolated 4-20 mA, 1000 ohms maximum load

Range Expand – The analog outputs can be made to represent a one pH unit or larger segment of the measuring scale (50 mV or larger segment for Model 672R).

‡Each output is isolated from the input, ground and line power, but not from each other.

Electrical Certification (optional) ..... CSA: General Purpose

ANALYZER PERFORMANCE (Electrical, Analog Outputs):

Sensitivity ..... 0.05% of span

Stability ..... 0.05% of span per 24 hrs., non-cumulative

Non-Linearity ..... 0.05% of span

Repeatability ..... 0.05% of span or better

Temperature Drift ..... Zero: 0.01% of span per °C
Span: 0.01% of span per °C

Response Time ..... 1, 10 or 30 seconds to 90% of value upon step change, selectable

MECHANICAL:

Enclosure ..... NEMA 4X, 1/2 DIN, polycarbonate with two 1/2-inch conduit holes and two stainless steel mounting brackets

Mounting Configurations ..... Surface, panel and horizontal pipe mount; Vertical pipe mount optional

Net Weight ..... 3 lbs. (1.36 kg) approx.

*Subject to change without notice.

112

ORDERING INFORMATION

MODEL NUMBER

672P3	pH	Microprocessor-based analyzer in NEMA 4X, 1/2 DIN enclosure with two stainless steel brackets for panel, surface or pipe mounting.
672R3	ORP	

ANALOG OUTPUT (Isolated 0-1 mA & 0-5 VDC plus.)
- **F** Isolated 4-20 mA

LINE VOLTAGE
- **1** 115 volts, 50/60 Hz. (single-fused)
- **2** 230 volts, 50/60 Hz. (single-fused)
- **6** 230 volts, 50/60 Hz. (dual-fused)

RESERVED CATEGORIES
- **N** Standard Instrument
- **K** Special Instrument

AGENCY CERTIFICATION
- **Blank** No approval
- **CSA** CSA Certified

F C0 - [ ] Product Number

Choose one from each category.

Accessories (ordered separately):

- **1000M4G1110 Panel Cutout Gasket Kit**
  For use when 672 is panel mounted to provide NEMA 4 integrity behind panel. Kit includes neoprene gasket and aluminum stiffener plate.
- **Sensors**
  Refer to data sheets LCP, Epoxy, 6000P0, FR, FTA, SS and 6300.

DIMENSIONS AND MOUNTING

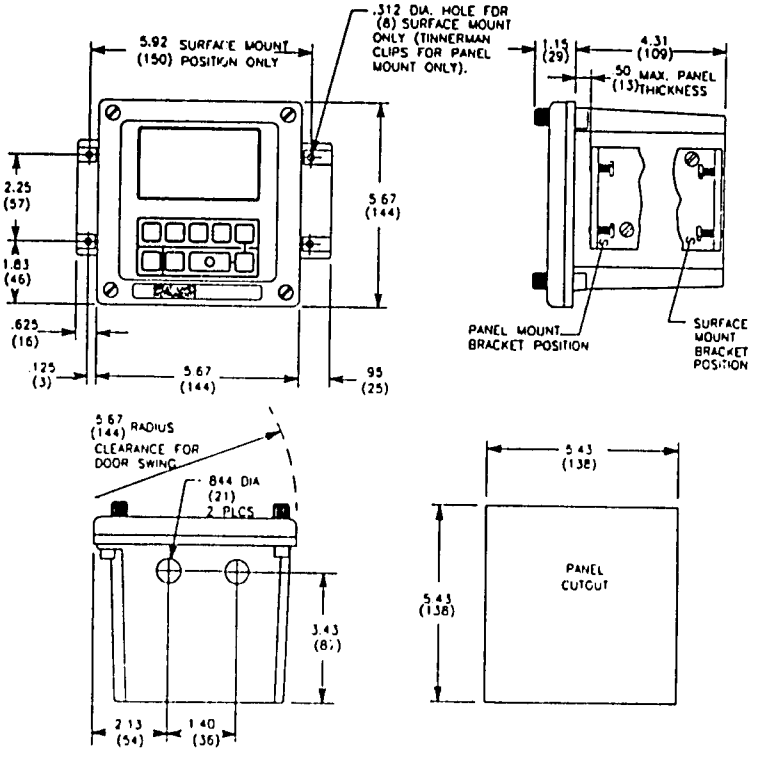

Represented By:

Great Lakes Instruments, Inc.
8855 N. 55th Street
Milwaukee, WI 53223

Telephone (414) 355-3601
Telefax (414) 355-8346

GREAT LAKES INSTRUMENTS

A Schott Group Company

Data Sheet 672PR/Printed in U.S.A.

Model 692 Two-Wire pH and ORP Transmitters (Microprocessor-Based)

pH/ORP

Data Sheet 692PR/1093
Supersedes 692PR/1292

FEATURES

- U.L. and CSA certified intrinsically safe systems
- Readouts for pH, temperature, mV and mA output
- Single or two-point automated calibration
- Automatic recognition of pre-selected buffer values
- Diagnostic error messages identify abnormal conditions
- Surface mount, NEMA 4X case

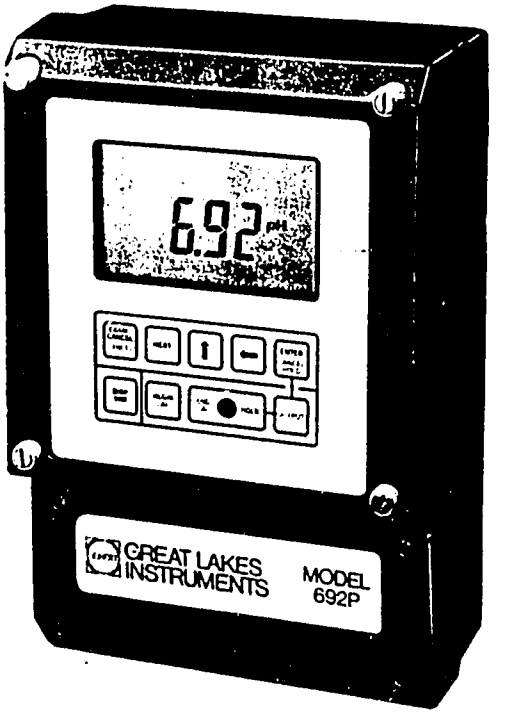

Description

Model 692P pH and Model 692R ORP two-wire transmitters provide accurate measurement with local indication and calibration for applications in hazardous areas or where line power is not readily available. These transmitters require only two wires, common for both output and power. No special cables are needed. The 692 isolated, DC current loop has high noise immunity permitting use of a simple twisted pair of wires. Multiple transmitters can be powered from a single DC voltage power source.

Certification options are available for the Model 692P and 692R transmitters by U.L. or CSA for intrinsic safety in Class I and II, Div. 1 areas when used with an appropriate sensor, barrier and NEMA 4 conduit hubs.

These transmitters accept one of two types of sensor inputs: a GLI 5-wire Differential Technique sensor or a conventional combination electrode with integral or separate temperature sensor. The 692 can utilize a Pt 1000 RTD or 300 ohm thermistor for automatic temperature compensation.

Display Capability

The 692P has a large liquid crystal display. Four variables can be alternately displayed: the pH, the temperature (in °C or °F), the sensor's mV signal or the 4-20 mA current. Indication for the 692R is similar except there is no pH readout.

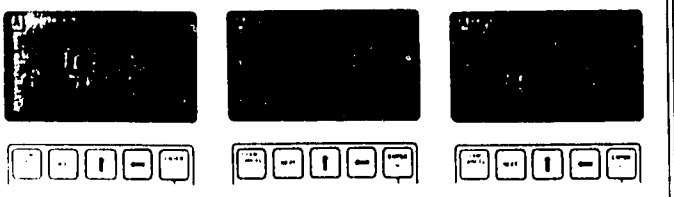

°C or °F Display | Sensor's mV Display | 4-20 mA Output Display

Clear, easily understood procedure messages prompt the operator when calibrating and configuring the instrument. Preprogrammed diagnostic messages flash automatically whenever system operating problems are detected.

SCHOTT GREAT LAKES INSTRUMENTS

▲ Maximum Loop Load: (in series with 692 and power supply)	With 24 VDC supply	400 ohms
	With 32 VDC supply	800 ohms
	With 40 VDC supply	1200 ohms

NOTE: For long cable runs, the resistance of the wire must be considered and may decrease maximum load capability.

▲Not applicable when using barrier for intrinsic safety.

ANALYZER PERFORMANCE (Electrical, Analog Output):

Sensitivity	0.05% of span
Stability	0.05% of span per 24 hrs., non-cumulative
Non-linearity	0.05% of span
Repeatability	0.1% of span or better
Temperature Drift	Zero: 0.01% of span per °C Span: 0.01% of span per °C
Response Time	1 second to 90% of value upon step change

MECHANICAL:

Enclosure	General purpose – safe for Division 2; NEMA 4X, polycarbonate with two 1/2 inch conduit holes and four stainless steel mounting tabs
Mounting Configurations	Surface mount; optional vertical or horizontal pipe mounting
Net Weight	3 lbs. (1.36 kg) approximately

ORDERING INFORMATION

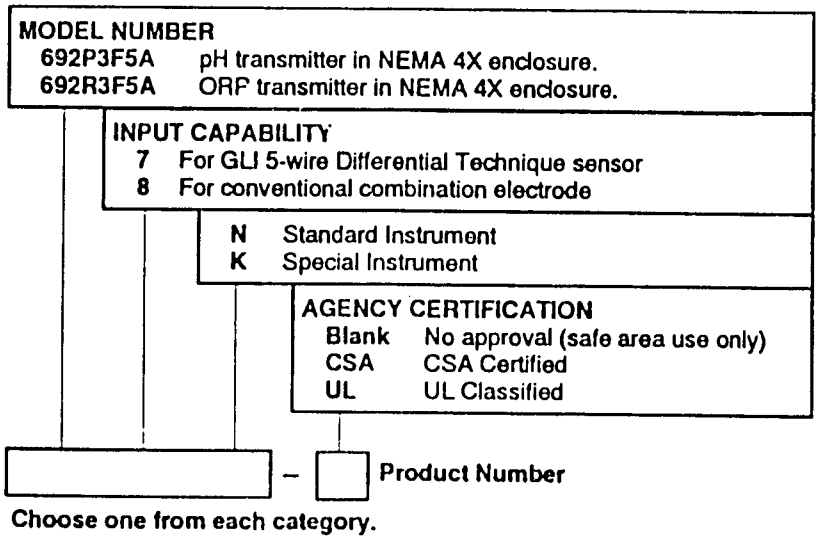

Choose one from each category.

Accessories (ordered separately):

- **692M4G1105 Input Board** — Allows transmitter to be retrofitted for use with a conventional combination electrode.
- **Sensors** — Refer to data sheets LCP, Epoxy, 6000P0, FR, FTA, SS and 6300.
- **Power Supplies** — Models 841 and 844 (see data sheet 841). The Model 670 Versalyzer®, which has an integral power supply, is also available when relay control and/or remote indication is required.
- **Intrinsic Safety Barriers** — GLI recommends barrier p/n 99X1F1054 and the Model 841 power supply or 670 Versalyzer® for applications requiring cable lengths up to 3000 ft. on hazardous area side and up to 6000 ft. on safe area side.

NOTE: Barrier and power supply selection are also dependent on cable type and, if applicable, the size (in ohms or voltage drop) of a repeated load. For additional information, consult GLI.

Output Flexibility

The isolated 4-20 mA instrument output eliminates problems caused by ground loops. An output hold function can be used to maintain the output during calibration or while configuring the instrument. Also, a range expand feature allows the 4-20 mA output to represent a one pH unit or larger segment of the measuring scale (50 mV for Model 692R).

User-Friendly Operation

The 692 is simple to operate. A watertight keypad is used to configure and calibrate the system and to display measurement data without having to open the enclosure door. When EXAM/CANCEL is pressed, the display changes from its measurement mode to an examination mode to show setup variables and their stored values. Pressing the NEXT key calls up the next setup variable. The ↑ and ← keys change the displayed value to a new value. Pressing ENTER stores the displayed value into memory. EXAM/CANCEL returns the display to its normal measurement mode without changing the stored value.

An internal, non-rechargeable battery retains user-entered setup values for approximately one year (at 25°C) should loop power be lost or turned off. The battery's one-year backup capacity can be used over a period of up to 10 years.

A security lock feature is provided to prevent unauthorized tampering of stored configuration values. For operator convenience, all stored data can be displayed and the instrument can be calibrated while keypad entry is locked. Special codes are used to lock and unlock keypad entry operation.

Calibration Versatility

To accommodate your specific needs, the 692P can be calibrated a number of different ways. Conventional single and two-point methods can be used where the operator enters the buffer values into the instrument memory. Two additional, alternate calibration methods are especially convenient for the novice operator because they eliminate the need to enter buffer values. For these methods, the operator need only place the sensor in the appropriate buffer for each calibration point. Calibration starts when the BEGIN CAL key is pressed. The instrument compares the stability of the pH and temperature inputs to a fixed rate setting. When both inputs are stable (changing less than the fixed rate) and the pH is within an acceptable range, the instrument prompts the operator to complete calibration of that point by pressing the END CAL key. (To prevent accidental calibration from occurring, this key must be pressed using a slender tool that fits through the access hole in the keypad.) Two known pH values can be keyed in during startup, or a buffer table look-up method can be used. The table contains pH versus temperature data for 14 specific buffer formulations and yields the best instrument calibration.

Flexible Installation

The Model 692 is housed in a NEMA 4X enclosure. The corrosion-resistant polycarbonate case has a hinged door which can be opened or easily removed to facilitate installation and servicing. Four screw fasteners provide quick access. A terminal strip compartment, with separate access and weatherproof seals, permits electrical hookup without exposing the instrument circuitry to the environment. Four stainless steel mounting tabs are included for surface mounting the transmitter. Optional hardware is available for vertical or horizontal pipe mounting.

SPECIFICATIONS*

OPERATIONAL:

Display		4-1/2 digit LCD with measurement unit and setup variable identifiers, 7/8" high digits.
Measuring Range:	Model 692P	0.00 to 14.00 pH, (-)500 to (+)500 mV and (-)10.0 to (+)110.0°C
	Model 692R	(-)2000 to (+)2000 mV and (-)10.0 to (+)110°C
Ambient Conditions		-30 to 50°C (-22 to 122°F), 0 to 95% relative humidity, non-condensing
Temperature Compensation		Automatic 0-100°C (32-212°F), 300 ohm thermistor or Pt 1000 RTD, switch selectable
Sensor-to-Transmitter Distance		3000 feet max. for GLI 5-wire Differential Technique sensor; 10 feet max. for direct connection of conventional combination electrode (a GLI Model 714 preamplifier is required for distances greater than 10 feet)
Power Requirements		16 to 40 volts DC
Analog Output		Isolated 4-20 mA with output hold feature

Range Expand - The 4-20 mA output can be made to represent a one pH unit of larger segment of the measuring scale (50 mV for Model 692R transmitter).

Hazardous Area Certification (optional) -

Intrinsic Safety	UL and CSA:	Class I, Div. 1, Groups A, B, C and D Class II, Div. 1, Groups E, F and G

*Subject to change without notice.

SYSTEM ARRANGEMENTS

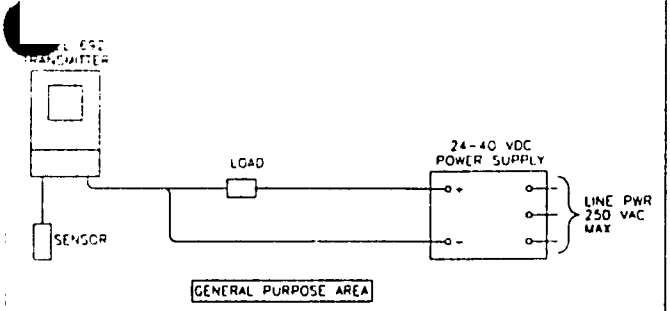

Safe Area Use (Powered without Barrier)

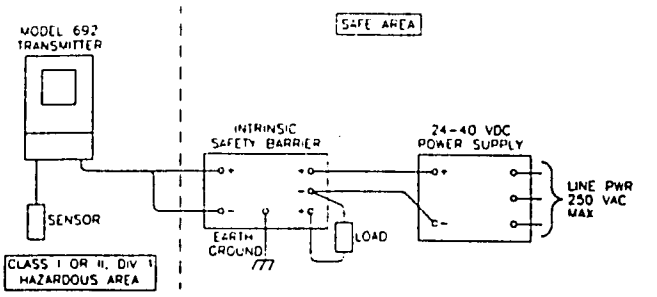

Hazardous Area Use (Powered through Barrier)

DIMENSIONS AND MOUNTING

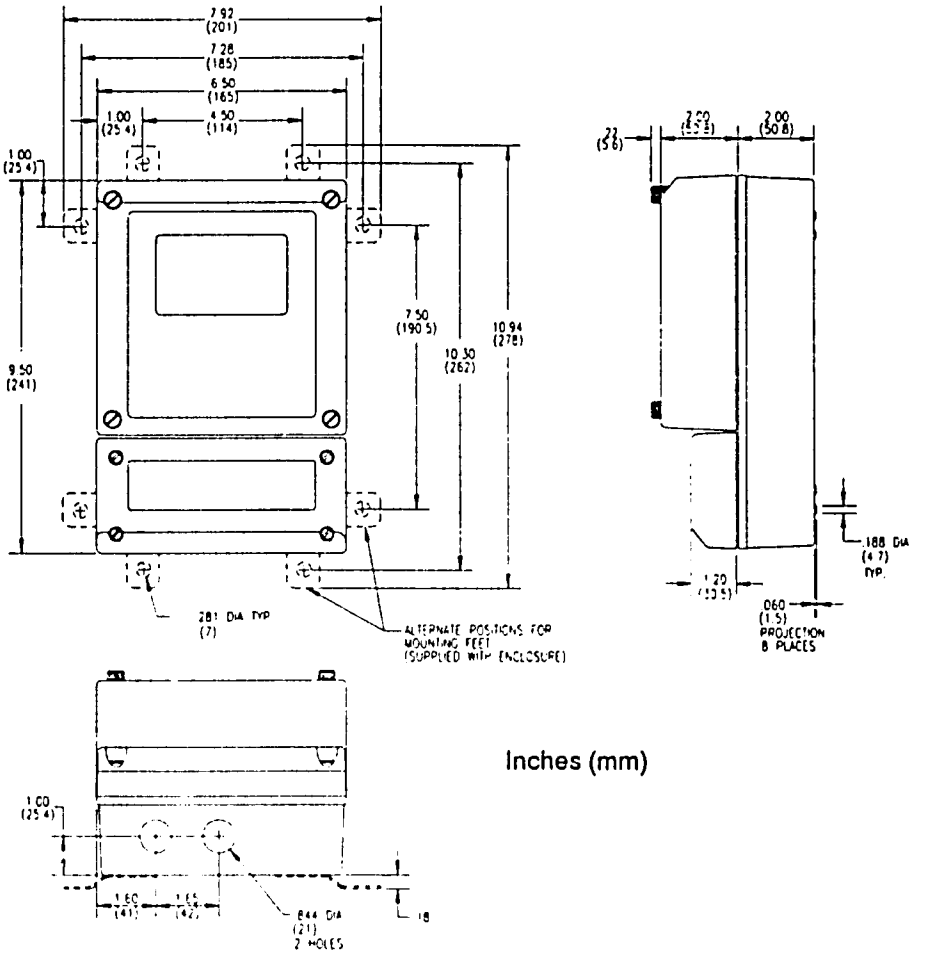

Inches (mm)

Represented By:

Great Lakes Instruments, Inc.
8855 N. 55th Street
Milwaukee, WI 53223

Telephone (414) 355-3601
Telefax (414) 355-8346

GREAT LAKES INSTRUMENTS

A Schott Group Company

Data Sheet 692PR/Printed In U.S.A.

177

Model 671 pH and ORP Analyzers

pH/ORP

Data Sheet 671PR/792
Supersedes 671PR/1091

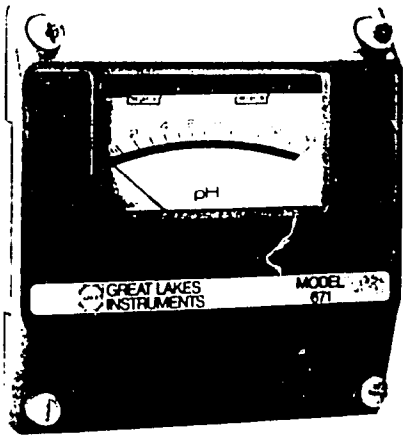

FEATURES

- 1/2 DIN, NEMA 4X enclosure
- Universal mounting
- Relays operate on increasing or decreasing reading, switch selectable
- Economical — ideal for custom system designs
- Modular construction simplifies field servicing

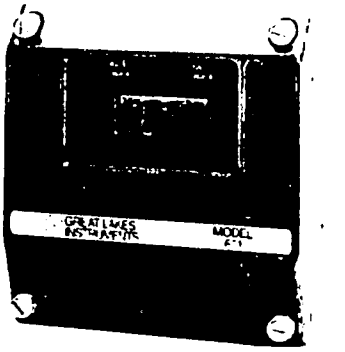

With Optional LCD Readout

Description:

Model 671P pH and 671R ORP analyzers fulfill three basic needs at low cost: accurate measurement, on/off relay control and analog outputs. The compact plastic enclosure is rated NEMA 4X and conforms to 1/2 DIN size standards. The instrument may be panel, surface or pipe mounted using the two stainless steel brackets provided. A certification option is available for these analyzers by CSA for general purpose use. Each analyzer may be used with a GLI 5-wire Differential Technique* sensor or a conventional combination electrode. Measurement readings are displayed on a 3-1/2 inch analog meter. An optional digital LCD readout is available.

Each type of analyzer has non-isolated 0-1 mA/0-5 VDC and 4-20 mA analog outputs. Isolation for the 4-20 mA output is optional. A range expand feature allows the 4-20 mA output to represent a segment as small as 10% of the measuring scale span. This feature may be used as a proportional controller for simple proportional control applications. Setpoint and gain controls establish the 4-20 mA controller output over the range of interest to regulate a proportioning final control element (valve or pump). A DIRECT/REVERSE jumper selects the direction of controller action. The analyzer may be ordered with an optional pulsed, contact closure output instead of the 4-20 mA output to operate variable speed, pulse-driven pumps. A choice of between 70 and 120 pulses per minute maximum output is available. The output pulse is 50 milliseconds with the pulse frequency proportional to 0-100 percent of the controller output.

Each analyzer has two relays (each with setpoint and deadband adjustments) which can be independently configured to operate in response to increasing or decreasing reading. An AUTO/OFF/MAN mode switch offers added control flexibility for one of the relays. A "dual-alarm" feature enables the other control relay to operate as an alarm relay with separate high and low alarm points. This will provide an alarm whenever the reading is outside the preset points.

*U.S. Patent 3862895

SPECIFICATIONS▲

OPERATIONAL:

Display	3-1/2 inch analog meter or optional backlit LCD readout with 1/2" high digits
Measuring Range	pH: 0-14; ORP: (–)1000 to (+)1000 mV
Ambient Conditions	-30 to 50°C (-22 to 122°F), 0 to 100% R.H. non-condensing
Relay Function: Control Setpoints	Continuously adjustable, 0-100% of full scale
Control Deadbands	Continuously adjustable, 0-15% of full scale
Dual-Alarm Feature	Individually adjustable high and low alarm points (0-100% of full scale) each with 2% fixed deadband
Indicators	LED lights when respective relay turns on
Contact Rating	SPDT, 5A 115/250 VAC, 5A @ 30 VDC resistive

NOTE: *Relays operate in response to increasing or decreasing reading, switch selectable.*

Proportional Controller: Setpoint	Anywhere on scale	
Proportional Gain	1 to 10	
Controller Output (uses analog output)	Current:	4-20 mA, 825 ohms max. load (drives 20-500 ohm loads when isolated)
	–or–	
	Pulsed.	Dry contact closure, 70 to 120 pulses/minute maximum (set to 100 unless specified), 50 millisecond contact closure, pulse frequency is proportional to 0-100% of the controller output. Contact rating is 200 VDC, 1/2 amp. DC, 10 W max.
Temperature Compensation	Automatic 0-100°C (32-212°F), 300 ohm thermistor	
Sensor-to-Analyzer Distance	3000 feet max. for GLI 5-Wire Differential Technique sensor: 10 feet max. for direct connection of conventional combination electrode (Model 714 preamplifier is required for distances greater than 10 feet)	

▲ Subject to change without notice

SCHOTT GREAT LAKES INSTRUMENTS

178

Power Requirements ..... 98-132 VAC, 50/60 Hz (less than 5 VA), optional 195-265 VAC, 50/60 Hz, connections via terminal strip
Analog Outputs: Standard ..... Non-expandable and non-isolated‡: 0-1 mA, 100 ohms maximum load or 0-5 VDC, 500K ohms minimum load
Expandable and non-isolated‡: 4-20 mA, 825 ohms maximum load
Optional ..... Isolation‡ for expandable 4-20 mA output only, drives 20-500 ohm loads

Range Expand – The 4-20 mA output can be made to represent a selected segment of the display scale. This segment cannot be smaller than 10% of the measuring scale span, but may be positioned anywhere within that span.

‡Non-isolated outputs are isolated from ground and line power, but not from the input or each other. The isolated output is isolated from the input, ground, line power and all other outputs.

Electrical Certification (optional) ..... CSA: General Purpose

ANALYZER PERFORMANCE (Electrical, Analog Outputs)

Sensitivity ..... 0.1% of span
Stability ..... 0.1% of span per 24 hrs., non-cumulative
Non-Linearity ..... 0.05% of span
Repeatability ..... 0.1% of span
Temperature Drift ..... Zero: 0.01% of span/°C; Span: 0.015% of span/°C
Response Time ..... 3 seconds to 90% of value upon step change

MECHANICAL:

Enclosure ..... NEMA 4X, 1/2 DIN, polycarbonate with two 1/2-inch conduit holes and SS mtg. brackets
Mounting Configurations ..... Surface, panel and horizontal pipe mount. Vertical pipe mounting optional.
Net Weight ..... 3 lbs. (1.36 kg) approx.

ORDERING INFORMATION

MODEL NUMBER
671P pH } Analyzer in NEMA 4X, 1/2 DIN enclosure with stainless steel mounting
671R ORP } brackets

DISPLAY (Specify measuring range from right)
1 Analog meter 3 Digital LCD

ANALOG OUTPUT (Non-isolated 0-1 mA/0-5 VDC plus:)
C Non-isolated 4-20 mA P Pulsed, contact closure (specify max. pulses/minute; 70 to 120)
F Isolated 4-20 mA

LINE VOLTAGE
1 115 volts, 50/60 Hz 2 230 volts, 50/60 Hz

RESERVED CATEGORIES

AGENCY CERTIFICATION
Blank No Approval
CSA CSA Certified

G0N – [ ] Product Number

Choose one from each category.

Standard Measuring Ranges

pH: 0-10, 0-14, 2-12, 4-10 and 4-14
ORP: 0-250, 0-500, 0-1000, (–)500 to (+)500 and (–)1000 to (+)1000 mV

Accessories (ordered separately):

- **Sensors** – Refer to data sheets LCP, Epoxy, 6000P0, FR, FTA, SS, and 6300.
- **99X1W1055 Interconnect Cable** (6-wire, 5 cond. plus shield)

DIMENSIONS AND MOUNTING

Inches (mm)

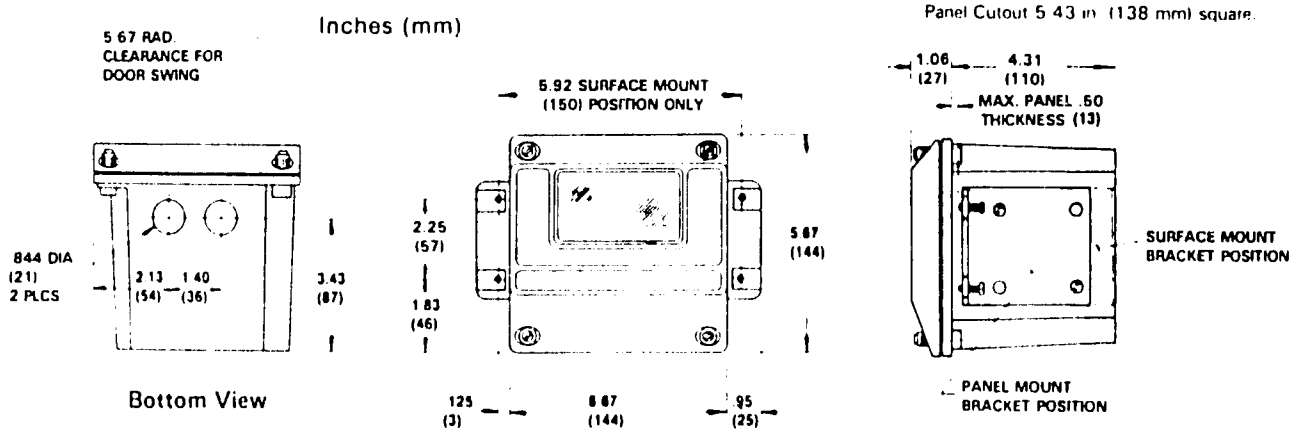

Represented By:

Great Lakes Instruments, Inc.
8855 N. 55th Street
Milwaukee, WI 53223

Telephone (414) 355-3601
Telefax (414) 355-8346

GREAT LAKES INSTRUMENTS

A Schott Group Company

Data Sheet 671PR/Printed in U.S.A.

Model 1671J Dual-Analyzer Systems
(For Model 671-series Analyzers)

pH/ORP/COND.

Data Sheet 1671J/195
Replaces 674/792

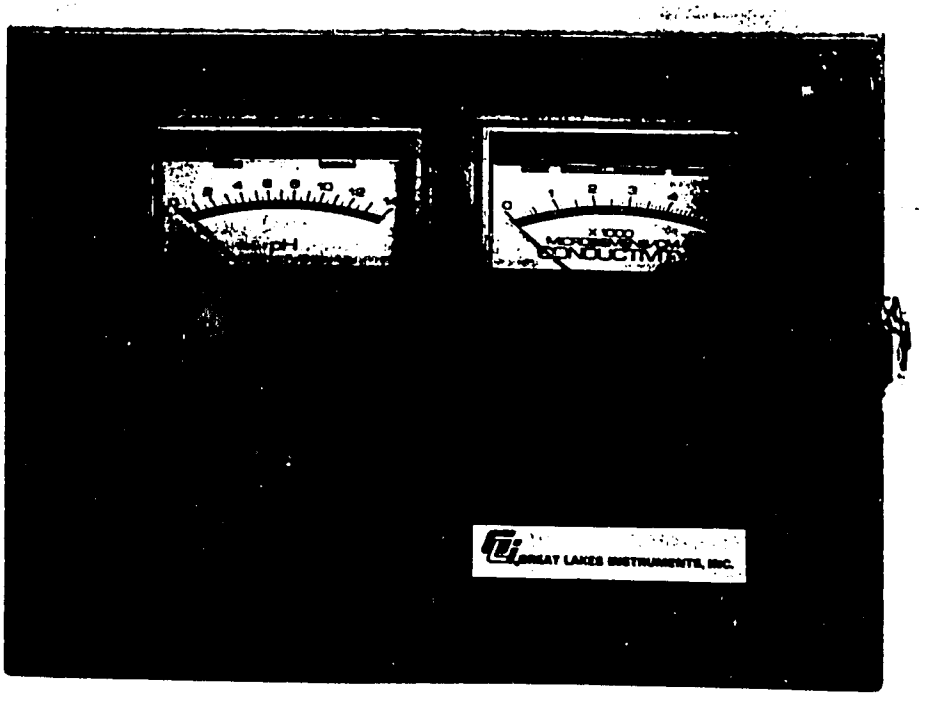

■ **Monitor/Control Two Parameters.**
Mix or match pH, ORP and conductivity analyzers to suit application requirements. Typical uses include pH neutralization with downstream pH monitoring, ORP control with downstream conductivity control, chromium waste treatment (pH and ORP), and two-stage cyanide destruction (requires two 1671J systems – each with pH and ORP monitoring and control).

■ **Prewired, Packaged Systems.**
Each Model 671 analyzer is mounted and prewired to simplify and reduce installation requirements. You need only mount one enclosure. Also, hookup is easy and convenient.

■ **NEMA 4X Protection.**
Each dual analyzer system is housed in a compact NEMA 4X enclosure which provides substantial environmental protection for most mounting locations.

■ **Independent, Multiple Outputs.**
Each analyzer provides non-isolated 0-1 mA/0-5 VDC and isolated 4-20 mA outputs. The 4-20 mA output is expandable to represent a selected segment of the measuring scale.

■ **Versatile Relay Operation.**
Each analyzer has two relays which can be selected to operate in response to increasing or decreasing reading. An Auto/Off/Manual mode switch provides added control capability. A "dual-alarm" feature enables one of the relays to operate with separate high and low alarm points, providing alarm switching whenever the reading is outside of these preset limits.

SCHOTT GREAT LAKES INSTRUMENTS

Ordering Information

MODEL NUMBER
1671J Dual-analyzer system (Model 671 units) in NEMA 4X enclosure with stainless steel mounting brackets.

LINE VOLTAGE
1 115 volts, 50/60 Hz.
2 230 volts, 50/60 Hz.

FIRST ANALYZER TYPE OF MEASUREMENT
P pH
R ORP (mV)
C Contacting Conductivity
E Electrodeless Conductivity (uses 3600E-series sensor)

FIRST ANALYZER DISPLAY/OUTPUT (Non-isolated 0-1 mA/0-5 VDC plus:)

– Analog Meter –	– Digital LCD Readout –
1 Non-isolated 4-20 mA	4 Non-isolated 4-20 mA
2 Isolated 4-20 mA (excludes 671E)	5 Isolated 4-20 mA (excludes 671E)
3 Pulsed, contact closure (see Note A)	6 Pulsed, contact closure (see Note A)

SECOND ANALYZER TYPE OF MEASUREMENT
P pH
R ORP (mV)
C Contacting Conductivity
E Electrodeless Conductivity (uses 3600E-series sensor)

SECOND ANALYZER DISPLAY/OUTPUT (Non-isolated 0-1 mA/0-5 VDC plus:)

– Analog Meter –	– Digital LCD Readout –
1 Non-isolated 4-20 mA	4 Non-isolated 4-20 mA
2 Isolated 4-20 mA (excludes 671E)	5 Isolated 4-20 mA (excludes 671E)
3 Pulsed, contact closure (see Note A)	6 Pulsed, contact closure (see Note A)

RESERVED CATEGORY

AGENCY CERTIFICATION
Blank No approval
CSA CSA Certified (General Purpose)

[ ] N - [ ] **Product Number**

Choose one from each category.

NOTES: A. The pulse output option is only available for pH and ORP analyzers. When ordering this option, please specify maximum number of pulses per minute from 70 to 120 (factory-set to 100 when not specified).

– Standard Measuring Ranges –

pH
0-10, 0-14, 2-12, 4-10, and 4-14

ORP
0-250, 0-500, 0-1000, -500 to +500, and -1000 to +1000

Contacting Conductivity (microSiemens/cm)	Use Sensor Cell Constant:
0-10, 0-50, 0-100, and 0-200	0.05
0-500, 0-1000, 0-2000, and 0-5000	0.5
0-10,000, 0-20,000, and 0-50,000	10.0

Electrodeless Conductivity (microSiemens/cm)			
0-200	0-1000	0-10,000	0-100,000
0-500	0-2000	0-20,000	0-200,000
	0-5000	0-50,000	0-500,000
			0-1,000,000

Accessories (ordered separately):

– For pH/ORP –

- **Sensors** — Refer to pH and ORP sensor data sheets LCP, Epoxy, 6000P0, FTA, SS, 6300, RP6300M, and 6314.
- **99X1W1055 Interconnect Cable** (5 conductors plus shield)

– For Contacting Conductivity –

- **Sensors** — Refer to contacting conductivity sensor data sheet 30000.
- **99X1W0979 Interconnect Cable** (4 conductors plus shield)

– For Electrodeless Conductivity –

- **Sensors** — Refer to electrodeless conductivity sensor data sheet 3600E.
- **99X1W1103 Interconnect Cable** (6 conductors plus shield)

Specifications

	pH/ORP	Contacting Conductivity	Electrodeless Conductivity
Operational:			
Display	Backlit LCD with 1/2 inch (13 mm) high digits or 3-1/2 inch (89 mm) wide analog meter	Same as pH/ORP	Same as pH/ORP
Measuring Range	pH: 0-14 pH ORP: -1000 to +1000 mV	0-10 to 0-50,000 µS/cm	0-200 to 0-1,000,000 µS/cm
Ambient Conditions	-22 to 122°F (-30 to 50°C); 0-100% R.H. non-condensing	Same as pH/ORP	Same as pH/ORP
Temperature Compensation	Automatic, 32-212°F (0-100°C) or fixed	Automatic, 32-212°F (0-100°C), fixed at 2% per °C	Automatic, 32-212°F (0-100°C), adj. 0-4% per °C
Sensor-to-Analyzer Distance	3000 ft. (914 m) max. for GLI 5-wire sensor; 10 ft. (3 m) max. for conventional combination electrode [Model 714 preamp req'd for distances greater than 10 ft. (3 m)]	300 ft. (91 m) max.	Maximum cable length is based on the measuring scale and allowable non-linearity. The recommended schedule is: Max. Scale Value — Length Below 1000 µS/cm ..... 100 ft. Above 1000 µS/cm ..... 300 ft.
Power Requirements	98-132 VAC, 50/60 Hz. (less than 5 VA); optional 195-265 VAC, 50/60 Hz.	Same as pH/ORP	Same as pH/ORP
Relay Function:		Same as pH/ORP	Same as pH/ORP
Setpoints	Adjustable, 0-100% full scale		
Deadbands	Adjustable, 0-15% full scale		
Dual-alarm Feature	Individually adjustable (0-100% of full scale) high and low alarm points; each point has a 2% fixed deadband		
Indicators	LED lights when relay turns on		
Contact Rating	SPDT; 5A 115/250 VAC; 5A @ 30 VDC resistive		

***NOTE:** Relays operate on increasing or decreasing reading, switch selectable.*

Analog Outputs	Non-expandable/non-isolated*: 0-1 mA, 100 ohms max. load/ 0-5 VDC, 500K ohms min load Expandable‡/isolated*: 4-20 mA, 500 ohms max. load or Expandable‡/non-isolated*: 4-20 mA, 825 ohms max. load	Same as pH/ORP	Same as pH/ORP except process is inherently isolated from unit by sensor. Therefore, isolated output is not provided. Expandable‡/non-isolated*: 4-20 mA, 825 ohms max. load

**Non-isolated outputs are isolated from ground and line power, but not from the input or each other. The isolated output is isolated from the input, ground, line power and all other outputs.*
‡The range expand feature can be used to make the 4-20 mA output represent a selected segment of the display scale. This segment cannot be smaller than 10% of the measuring scale span, but it may be set anywhere within that span.

Proportional Controller:		Not available	Not available
Setpoint	Adjustable, 0-100% full scale		
Proportional Gain	1 to 10		
Controller Output (uses 4-20 mA):			
Current	4-20 mA, 500 ohms max. load		
Pulsed	Dry contact closure▲		

▲Dry contact closure is 70-120 pulses/min max. (factory-set to 100 when not specified) and each pulse is 50 milliseconds long. The pulse frequency is proportional to 0-100% of the controller output. The contact rating is 200 VDC, 1/2 amp DC, 10 watts maximum.

Electrical Certification (optional)	CSA: General Purpose use	Same as pH/ORP	Same as pH/ORP
Analyzer Performance (Electrical, Analog Outputs):			
Sensitivity	0.1% of span	Same as pH/ORP	Same as pH/ORP
Stability	0.1% of span per 24 hours, non-cumulative	Same as pH/ORP	0.2% of span per 24 hours, non-cumulative
Repeatability	0.1% of span	Same as pH/ORP	Same as pH/ORP
Response Time	3 seconds to 90% of value upon step change	Same as pH/ORP	5 seconds to 90% of value upon step change
Non-linearity	0.05% of span	0.5% of span	0.2% of span
Temperature Drift	Zero: 0.01% of span per °C Span: 0.015% of span per °C	Zero: 0.02% of span per °C Span: 0.02% of span per °C	Zero: 0.01% of span per °C Span: 0.02% of span per °C
Mechanical:			
System Enclosure	NEMA 4X, styrene with two stainless steel mtg. brackets	Same as pH/ORP	Same as pH/ORP
System Mounting Configurations	Surface, panel and pipe mount	Same as pH/ORP	Same as pH/ORP
System Net Weight	12 lbs. (5.5 kg) approximately	Same as pH/ORP	Same as pH/ORP

Specifications are subject to change without notice

187

Dimensions

Inches (mm)

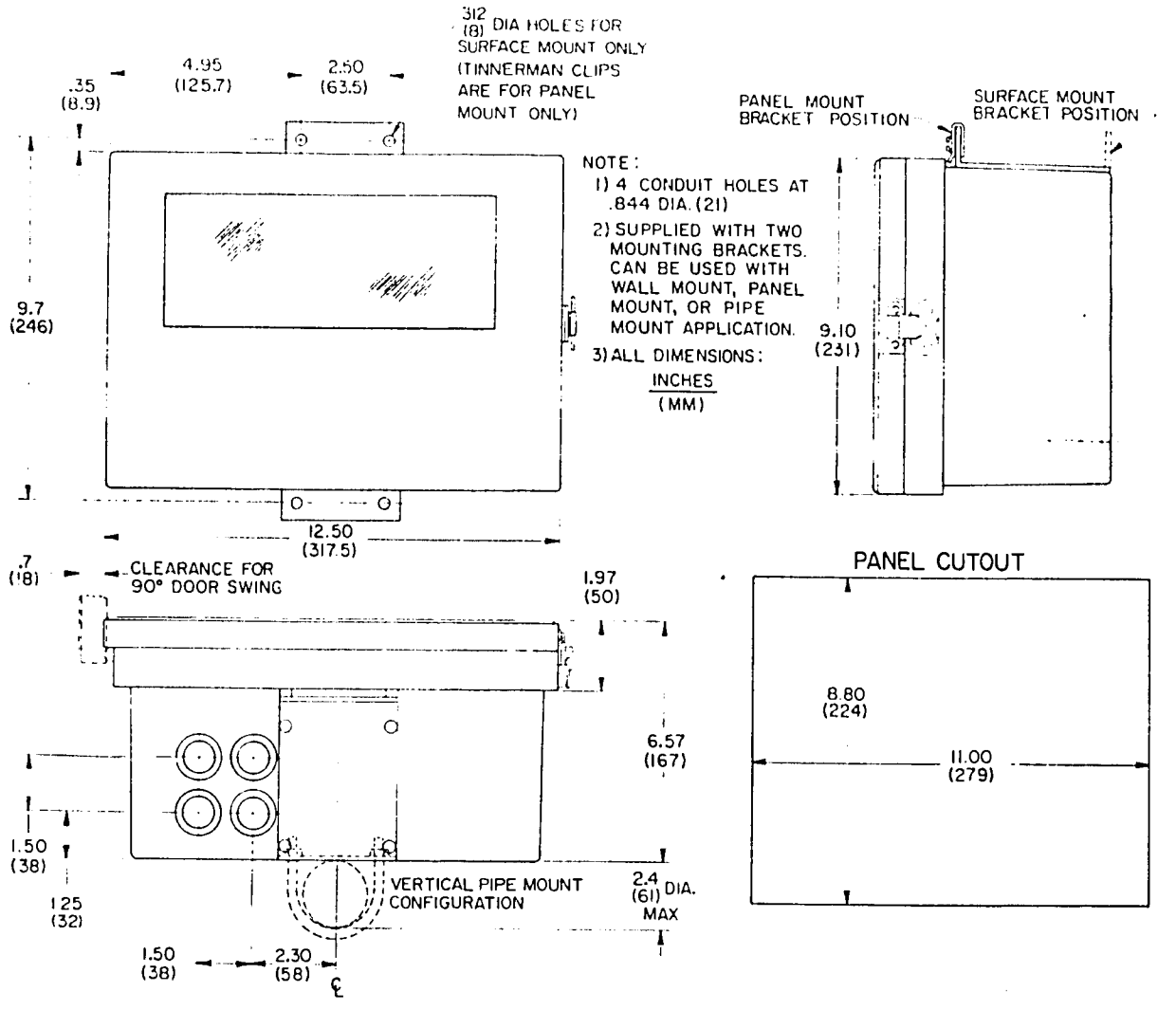

Mounting Configurations

Panel-Mount
(tinnerman nuts included)

Surface-Mount

Pipe-Mount
(U-bolts not included)

Represented By:

Great Lakes Instruments, Inc.
9020 West Dean Road
Milwaukee, WI 53224

Telephone (414) 355-3601
Telefax (414) 355-8346

GREAT LAKES INSTRUMENTS

A Schott Group Company

Data Sheet 1671J/Printed in U. S. A.

LCP* - Encapsulated pH/ORP Sensors
(With Integral Preamplifier or Two-Wire Transmitter)

pH/ORP

Data Sheet LCP/691
Supersedes LCP/890

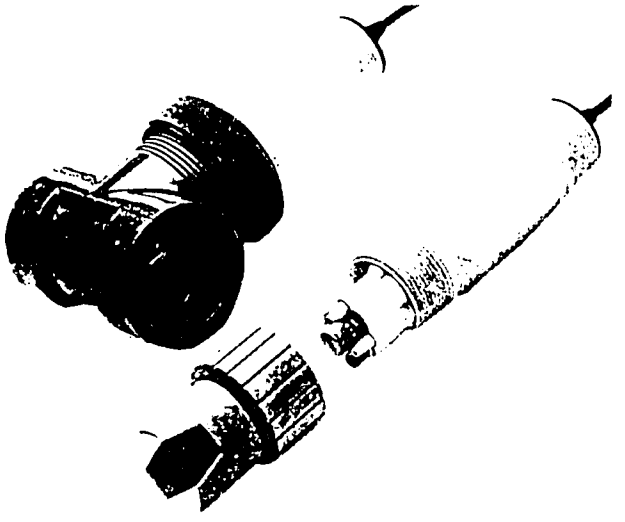

FEATURES

- Liquid crystal polymer sensor body resists attack from virtually any chemical and has exceptional mechanical strength
- Complete encapsulation eliminates moisture problems
- Patented Differential Electrode Technique** minimizes measurement errors caused by ground loop currents, reference electrode contamination and precipitate build-up
- Convertible mounting style consolidates inventory to reduce associated costs

Description:

These encapsulated pH and ORP sensors are ideal for virtually every measurement application. GLI's patented, field-proven Differential Electrode Measurement Technique** is combined with exceptional chemical resistance of liquid crystal polymer for use in aggressive, difficult-to-handle process solutions such as acids, bases, alcohols, hydrocarbons, aromatics, chlorinated hydrocarbons, esters and ketones. The rugged, long-lasting packaging and the reliable design insures that these sensors stay "on-line" and provide accurate measurements under conditions that often render conventional pH sensors inoperable.

GLI's Differential Electrode Measurement Technique uses a process electrode and a "standard electrode" to make the measurement differentially with respect to a solution ground electrode. The glass electrode in the "standard electrode" chamber is immersed in a buffered pH 7 solution. This inner chamber completes the electrical circuit with the process solution through a double-junction salt bridge. GLI's uniquely constructed "standard electrode" provides the stability and accuracy for which differential measurements are known. For complete details about GLI's Differential Electrode Measurement Technique, refer to Bulletin SB-1.

The sensor electronics are completely encapsulated to eliminate moisture and high humidity problems. These pH and ORP sensors are offered with an integral preamplifier or two-wire transmitter which provides a 4-20 mA output proportional to pH. The two-wire 4-20 mA output is non-isolated and uncalibrated. The measuring system's indicating instrument must be able to provide 24 VDC to power the sensor and have adjustment means to calibrate for offset and span. The pH sensor also includes a temperature sensor to automatically compensate pH measurements for process temperature variations.

These LCP-encapsulated sensors have a distinctive hex-shaped body to facilitate installation. Because threads are provided on both ends, the sensor may be mounted into a pipe tee or attached to the end of a pipe for submersion applications. This "convertible" mounting style allows consolidation of inventory to reduce associated costs. The special properties of the liquid crystal polymer body allow the sensor to be installed in metal fittings without leakage usually caused by heating/cooling cycles when using other sensor materials. A union-mount style sensor and special mounting tee are also available for in-line service that provides convenient installation and removal.

Optional mounting hardware assemblies are offered in a variety of materials. Each assembly includes a pipe-mount or surface-mount junction box with terminal strip. Refer to page 3 for complete hardware descriptions. Interconnect cable is sold separately for wire runs between the junction box and instrument.

* Liquid crystal polymer thermoplastic
**U.S. Patent 3862895

SCHOTT GREAT LAKES INSTRUMENTS

184

MOUNTING HARDWARE ASSEMBLIES

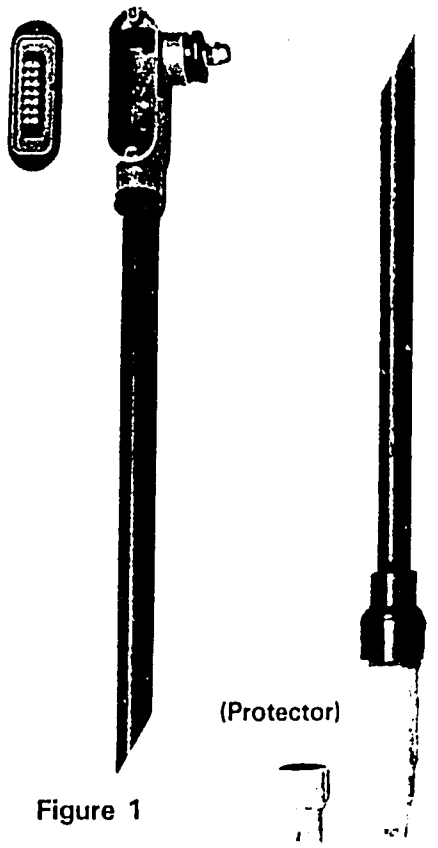

Figure 1

For Submersion Mounting

Part No.	Description
MH474B	1" x 4' PVC pipe and coupling with PVC pipe-mount junction box
MH434B	1" x 4' CPVC pipe and coupling with PVC pipe-mount junction box
60A2F1278	Protector (ordered separately)

NOTE: Sensor and interconnect cable are not included and must be ordered separately.

Plastic Mounting Hardware Ratings

Liquid crystal polymer encapsulated sensors mounted in flow-thru plastic tees have higher pressure ratings at maximum temperature than when mounted in union style plastic tees. The temperature rating is increased to 95°C at 100 psig when the sensor is mounted in a stainless steel flow-thru tee (or cross) or union tee.

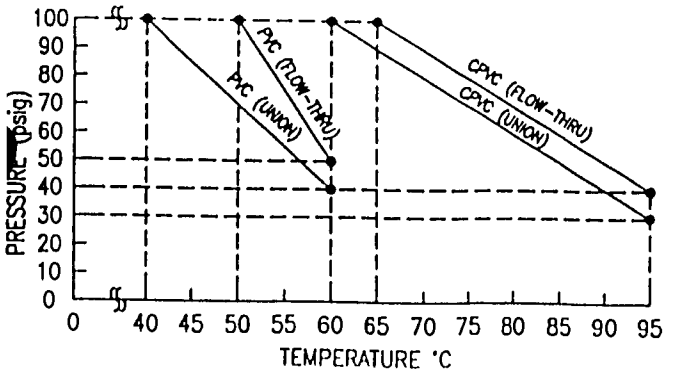

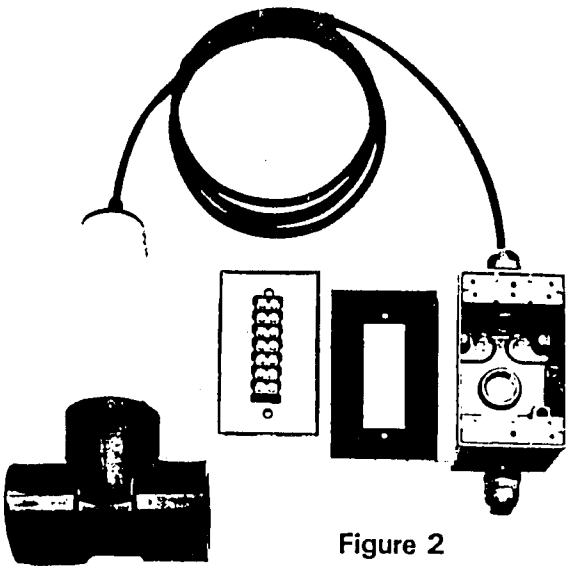

Figure 2

For Flow-Thru Mounting

Part No.	Description
MH376	1½" PVC tee and aluminum j-box
MH336	1½" CPVC tee and aluminum j-box
MH316N	1½" stainless (316) tee and aluminum j-box
MH346X	1½" stainless (304) cross and aluminum j-box

NOTE: Sensor and interconnect cable are not included and must be ordered separately.

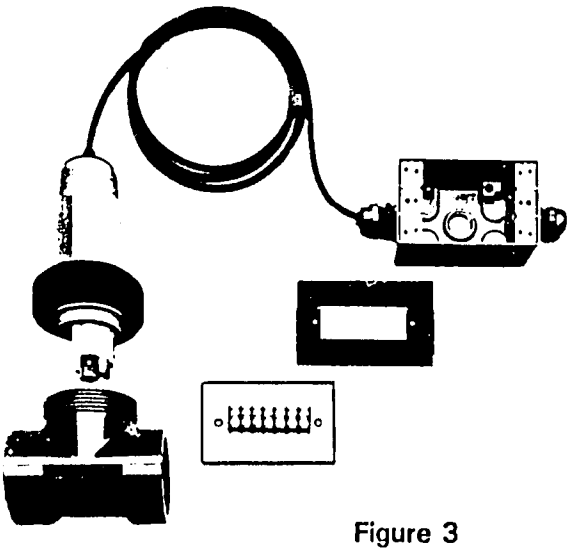

Figure 3

For Union Mounting

Part No.	Description
MH578N9A	Special 2" PVC tee and aluminum j-box
MH538N9A	Special 2" CPVC tee and aluminum j-box
MH518N9A	Special 2" stainless (316) tee and aluminum j-box

NOTE: Sensor and interconnect cable are not included and must be ordered separately.

SPECIFICATIONS▲

	In Flow-Thru Tee	In Union Tee
Minimum Temperature	-5°C (23°F)	-5°C (23°F)
Maximum Temperature	PVC: 60°C at 50 psig or 50°C at 100 psig Steel: 95°C at 100 psig CPVC: 95° at 40 psig or 65°C at 100 psig	PVC: 60°C at 40 psig or 40°C at 100 psig Steel: 95°C at 100 psig CPVC: 95°C at 30 psig or 60°C at 100 psig
Maximum Pressure	PVC: 100 psig at 50°C or 50 psig at 60°C Steel: 100 psig at 95°C CPVC: 100 psig at 65°C or 40 psig at 95°C	PVC: 100 psig at 40°C or 40 psig at 60°C Steel: 100 psig at 95°C CPVC: 100 psig at 60°C or 30 psig at 95°C
Maximum Flow Rate	10 feet per second. ***NOTE:*** *If possible, flow rate should be minimal for low conductivity water or solutions high in suspended solids.*	

	pH Sensors	ORP Sensors
Wetted Materials	Liquid crystal polymer body, liquid crystal polymer and PVDF (or ceramic) salt bridge, glass process electrode, titanium ground electrode and RTV sealant. Union-mount style sensor also has liquid crystal polymer adapter and Viton O-ring process seals. For pH sensors with an antimony instead of glass process electrode, stainless steel replaces titanium ground electrode.	Same as pH sensors except process electrode is glass with platinum or gold.
Measuring Range	0-14 pH*	(-)2000 to (+)2000 mV
Performance:		
Sensitivity	Less than 0.005 pH	Less than 0.5 mV
Stability	0.03 pH per 24 hrs., non-cumulative	2 mV per 24 hrs., non-cumulative
For Sensor w/2-wire transmitter:		
Output Span	0.95 mA per pH unit	16 mA per 1000 mV
Output Offset	12 mA occurs at 7.0 pH ± 0.88 pH NOTE: The 4-20 mA is non-isolated and uncalibrated. The measuring system's indicating instrument must be able to provide 24 VDC to power the sensor and have adjustment means to calibrate for offset and span.	For (-)500 to (+)500 mV range: 12 mA occurs at 0 mV ± 40 mV For 0 to 1000 mV range: 12 mA occurs at 500 mV ± 40 mV
Load at 20 mA	450 ohms	450 ohms

Sensor Cable	Sensors with Preamplifier: 5 conductor (plus shield), 10 ft. (3 m) length Sensors with 2-wire transmitter: 2 conductor (twisted pair), 10 ft. (3 m) length
Transmission Distance	Sensor with Preamplifier: 3000 ft. (914 m) maximum Sensor with 2-wire Transmitter: Limited only by wire resistance and power supply voltage

▲Subject to change without notice.

* Most pH applications fall in the 2.5-12.5 pH range. General purpose pH glass electrodes perform well in this range. Some industrial applications require accurate measurements and control at pH values below 2 or above 12. Consult Great Lakes Instruments, Inc. for details on these applications.

Repeatability and speed of response for pH sensors with an antimony process electrode is not as good as those with a glass process electrode. Antimony electrodes are only linear between 3 and 8 pH and should only be specified when process conditions, such as the presence of hydroflouric acid, dictate their use.

ORDERING INFORMATION

TYPE OF MEASUREMENT
- 20 ORP, 5-wire (with integral preamplifier)
- 24 ORP, 2-wire (with integral two -wire transmitter and 4-20 mA output)
- 60 pH, 5-wire (with integral preamplifier)
- 64 pH, 2-wire (with integral two-wire transmitter and 4-20 mA output)

MOUNTING STYLE
- 2 Convertible (submersion or flow-thru mount) with integral 10 ft. (3 m) cable (NOTE 1)
- 5 Union-mount (requires special 2 inch threaded tee) with integral 10 ft. (3 m) cable

BODY MATERIAL
- 8 Liquid crystal polymer

ELECTRODE MATERIAL
- P0 Glass, general purpose } for pH
- PI Antimony } for pH
- R0 Platinum } for ORP
- RI Gold } for ORP

8 Product Number

Choose one from each category.

NOTES: 1. When convertible mounting style sensor is submersion mounted, order 60A2F1278 protector.

Accessories (ordered separately):

- **99X1W0980** Interconnect Cable† (2-wire plus shield)
- **99X1W1055** Interconnect Cable† (5-wire plus shield)
- **60M2G9753-101** Union Adapter Includes two Viton O-rings and a retaining ring.
- **pH Buffers** (in resealable plastic bottles)
  99X3A0421 pH 7 (1 pint)
  99X3A0422 pH 4 (1 pint)
  99X3A0942 pH 10 (1 pint)

† Typically, 50 ft is recommended for each installation.

DIMENSIONS AND MOUNTING

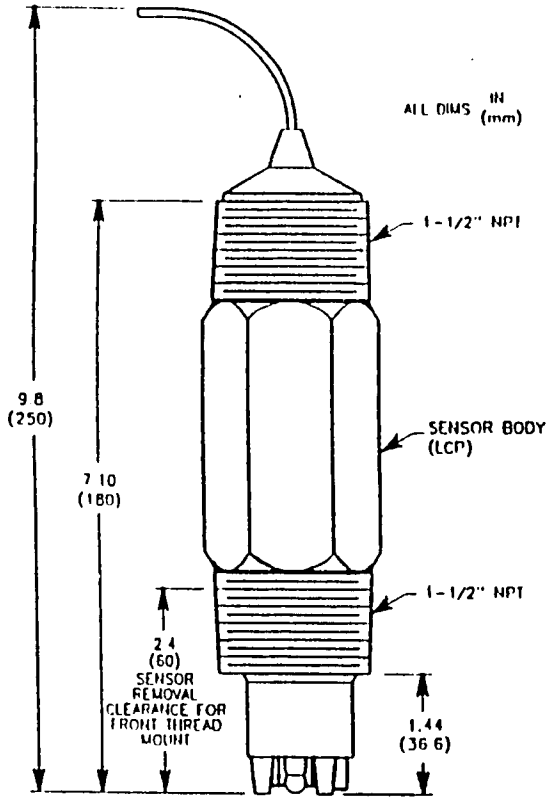

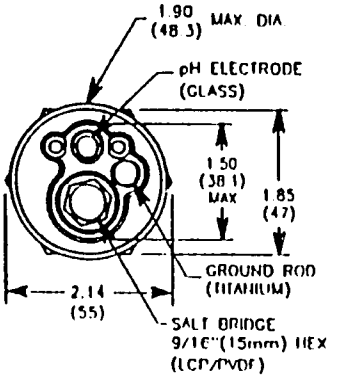

Convertible Style Sensor

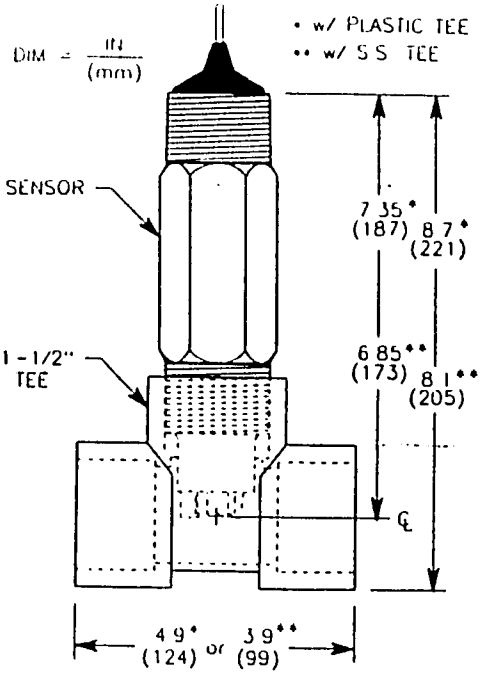

Flow-thru Mount

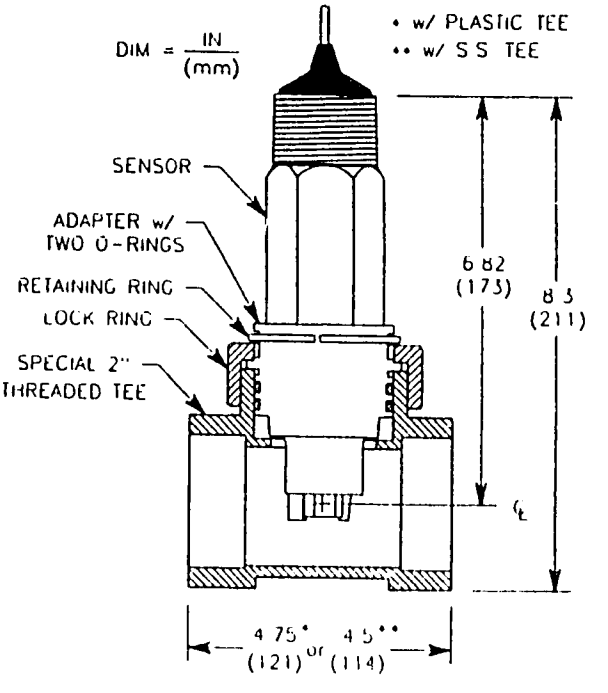

Union-Mount

Represented By:

Great Lakes Instruments, Inc.
8855 N. 55th Street
Milwaukee, WI 53223

Telephone (414) 355-3601
Telefax (414) 355-8346

GREAT LAKES INSTRUMENTS

A Schott Group Company

Data Sheet LCP/Printed in U.S.A.

137

Insertion Sensors And Mounting Hardware

pH/ORP

Data Sheet FTA/1190
Supersedes FTA/988

Model 6070P0 Style Sensor

Model 6010P0 Style Sensor

FEATURES

- Allows sensor insertion/removal from pressurized process line without interrupting flow
- Mounting hardware available for power-assist or manual operation
- Choice of durable materials of construction
- Styles for slurry applications

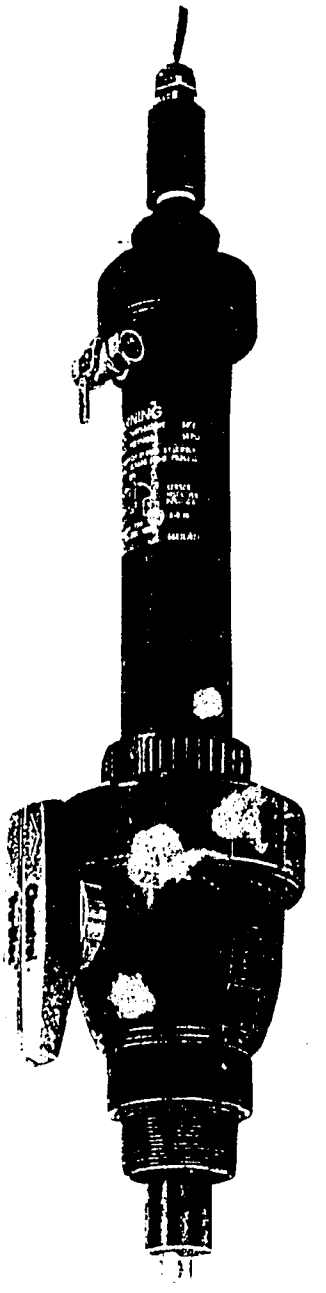

MH778 (PVC air-assist) Mounting Hardware Assembly With Model 6070P0 Sensor

Description

These insertion sensors and mounting hardware assemblies make it possible to mount a pH or ORP sensor directly into a pressurized process line, while providing the capability of inserting or removing the sensor without interrupting the flow in the line. The insertion assemblies facilitate continuous measurement in applications where process flow cannot be shut down for routine maintenance. Such applications include monitoring and control in pulp and paper mills, petro-chemical factories, metal treatment plants and a wide variety of other processes.

These insertion sensors use GLI's patented Differential Electrode Technique* of measurement. Two basic types are offered: sensors with an integral preamplifier and 5-wire cable and sensors with an integral transmitter which provides a 2-wire 4-20 mA output. The high impedance electronics are completely encapsulated to eliminate moisture and high humidity problems. Temperature compensation is automatic. GLI insertion sensors have a field-proven design, providing high reliability in the most demanding applications.

Each basic type of pH sensor is available in two styles: Models 6010P0 and 6410P0 which are used with MH100-series mounting hardware assemblies and Models 6070P0 and 6470P0 which include a special wiper and are used with MH700-series mounting hardware assemblies. Model 6070P0 and 6470P0 pH sensors and MH700-series mounting hardware assemblies are specifically designed for slurry applications. Model 6010P0 and 6410P0 pH sensors and MH100-series mounting hardware assemblies are well suited for solution applications. Each basic type of ORP sensor is also available in these styles and uses the same corresponding mounting hardware assemblies.

*U.S. Patent 3862895

SCHOTT GREAT LAKES INSTRUMENTS

188

Model 6070P0 and 6470P0 sensors are encapsulated in vinyl ester and feature "low profile" electrodes and a special wiper around the circumference of the sensor (Figure 1). This wiper forms a barrier with the inside bore of an MH700-series mounting hardware assembly to prevent process slurries from clogging it. As a result, insertion/extraction is improved. MH700-series mounting hardware assemblies are available in PVC, CPVC and 316 stainless steel. A 1/4-inch pipe fitting on the Extraction/Off/Insertion control valve accepts connection for an air or water line. Air or water pressure is applied to or removed from the assembly using the control valve to provide power-assisted operation for convenient sensor insertion/extraction.

Model 6010P0 and 6410P0 sensors are also encapsulated in vinyl ester. Corresponding MH100-series mounting hardware assemblies are offered in PVC, CPVC and 316 stainless steel. These assemblies are not power-assisted. A 1/4-inch tube fitting is provided to connect a water line which may be used for cleaning the assembly during normal operation by flushing out process material. Model 6010P0 and 6410P0 sensors do not have a barrier to keep the process from entering the assembly (Figure 2).

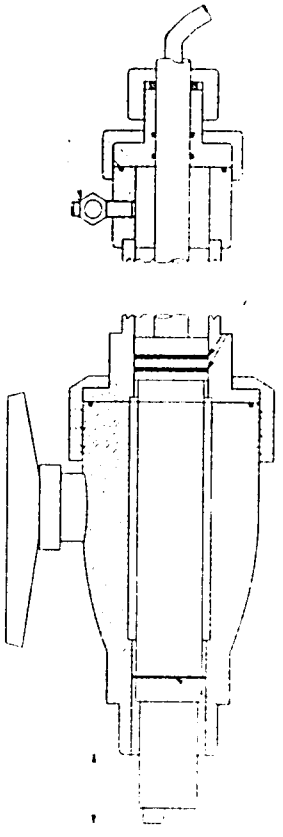

FIGURE 1
Model 6070P0 and 6470P0 pH Sensor/ MH700-series Mounting Hardware Assembly Construction Details

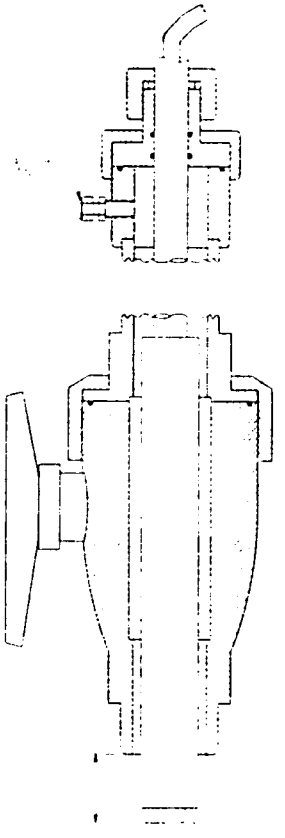

FIGURE 2
Model 6010P0 and 6410P0 Sensor/ MH100-series Mounting Hardware Assembly Construction Details

SPECIFICATIONS▲

	Model 6070P0 and 6470P0 pH Sensors/ MH700-Series Mounting Hardware	Model 6010P0 and 6410P0 pH Sensors/ MH100-Series Mounting Hardware
Wetted Materials:		
Sensor	Vinyl ester body and salt bridge w/PVDF junction, glass process electrode, titanium palladium ground electrode, Teflon wiper, Viton O-rings and RTV sealant	Vinyl ester body and salt bridge w/PVDF junction, glass process electrode, titanium palladium ground electrode and RTV sealant
Plastic Mtg. Hardware	PVC or CPVC and Teflon valve seats	Brass, PVC or CPVC, Teflon valve seats and Viton O-ring seals
Steel Mtg. Hardware	316 stainless steel and Teflon valve seats	316 stainless steel, Teflon valve seats and Viton O-ring seals
Temperature Range	MH778: -5 to 60°C (23 to 149°F) supported or unsupported MH738: -5 to 80°C (23 to 176°F) unsupported if installed vertically, -5 to 95°C (23 to 203°F) when supported with bracket	MH178: -5 to 60°C (23 to 149°F) supported or unsupported MH138: -5 to 80°C (23 to 176°F) unsupported if installed vertically, -5 to 95°C (23 to 203°F) when supported with bracket

NOTE: These sensor/mtg. hardware assembly temperature ratings (continued on pg. 3) are limited by the mounting hardware material, maximum pressure and whether the assembly is supported or unsupported.

	Model 6070P0 and 6470P0 pH Sensors/ MH700-series Mounting Hardware	Model 6010P0 and 6410P0 pH Sensors/ MH100-series Mounting Hardware
Temperature Range (continued)	MH718: -5 to 95°C (23 to 203°F) supported or unsupported	MH118: -5 to 95°C (23 to 203°F) supported or unsupported
Maximum Pressure NOTE: These sensor/mtg. hardware assembly pressure ratings are limited by the mounting hardware material and maximum temperature.	MH778: 50 psig at 60°C MH738: 50 psig at 90°C MH718: 100 psig at 95°C	MH178: 50 psig at 60°C MH138: 50 psig at 90°C MH118: 80 psig at 95°C NOTE: Higher pressure on these assemblies will make insertion dificult.
Maximum Flow Rate	10 feet per second. NOTE – If possible, flow rate should be minimal for low conductivity water or solutions high in suspended solids.	
Measuring Range:		
pH	0 to 14 pH‡	0 to 14 pH‡
ORP	(–)2000 to (+)2000 millivolts	(–)2000 to (+) 2000 millivolts
Stability: pH	0.03 pH units per 24 hrs., non-cumulative	0.03 pH units per 24 hrs., non-cumulative
ORP	2 millivolts per 24 hrs., non-cumulative	2 millivolts per 24 hrs., non-cumulative
Sensitivity: pH	less than 0.005 pH	less than 0.005 pH
ORP	less than 0.5 millivolts	less than 0.5 millivolts
Output Span (For 2-wire sensors only)	pH: 0.95 mA per pH ORP: 16 mA per 1000 mV	pH: 0.95 mA per pH ORP: 16 mA per 1000 mV
Output Offset (For 2-wire sensors only)	pH: 12 mA occurs at 7.0 pH ± 0.6 pH ORP: 12 mA occurs at 500 mV± 40 mV for 0-1000 mV range 12 mA occurs at 0.0 mV ± 40 mV for ± 500 mV range	pH: 12 mA occurs at 7.0 pH ± 0.6 pH ORP: 12 mA occurs at 500 mV ± 40 mV for 0-1000 mV range 12 mA occurs at 0.0 mV ± 40 mV for ± 500 mV range
Load at 20 mA (for 2-wire sensors only)	450 ohms	450 ohms
Sensor Cable	2 or 5 conductor (plus shield), 10 feet	2 or 5 conductor (plus shield), 10 feet
Transmission Distance	5-wire Sensors: 3000 ft. max. 2-wire Sensors: Limited by wire resistance and power supply voltage	5-wire Sensors: 3000 ft. max. 2-wire Sensors: Limited by wire resistance and power supply voltage
Net Weight (including sensor)	MH778 and MH738: 7.5 lbs. (3.4 kg) MH718: 25 lbs. (11.3 kg))	MH178 and MH138: 7.5 lbs. (3.4 kg) MH118: 25 lbs. (11.3 kg)
Mounting	Vertical to 75° from vertical axis mounting into 2-inch NPT tee or flange (all models). NOTE: A bracket or strap must be used to support MH778 and MH738 hardware if not installed vertically. MH738 and MH138 hardware must also be supported if the process temperature exceeds 80°C.	

▲Subject to change without notice.

‡ Most pH applications are in the 2.5 to 12.5 range. General purpose pH glass electrodes perform well in this range. Some industrial applications require accurate measurements and control at pH values below 2 or above 12. Consult GLI for details on these applications.

ORDERING INFORMATION

	Sensors				Mounting Hardware Assembly
	Model Number		Body Material	Electrode Material	Product Number/Wetted Material
	5-Wire Type	2-Wire Type			
pH	6010P0	6410P0	Vinyl ester	Glass	MH178 (PVC), MH138 (CPVC) or MH118 (316 stainless steel)
	6070P0	6470P0	Vinyl ester	Glass	MH778 (PVC), MH738 (CPVC) or MH718 (316 stainless steel)
ORP	2010R0	2410R0	Vinyl ester	Platinum	MH178 (PVC), MH138 (CPVC) or MH118 (316 stainless steel)
	2010R1	2410R1	Vinyl ester	Gold	MH178 (PVC), MH138 (CPVC) or MH118 (316 stainless steel)
	2070R0	2470R0	Vinyl ester	Platinum	MH778 (PVC), MH738 (CPVC) or MH718 (316 stainless steel)
	2070R1	2470R1	Vinyl ester	Gold	MH778 (PVC), MH738 (CPVC) or MH718 (316 stainless steel)

NOTE: Interconnect cable (5 conductor plus shield, P/N 99X1W1055 or 2 conductor plus shield, P/N 99X1W0980) must be ordered separately. Typically, 50 ft. is recommended for each installation.

DIMENSIONS AND MOUNTING

Model 6070P0 and 6470P0 pH Sensors and MH700-series Mounting Hardware Assembly

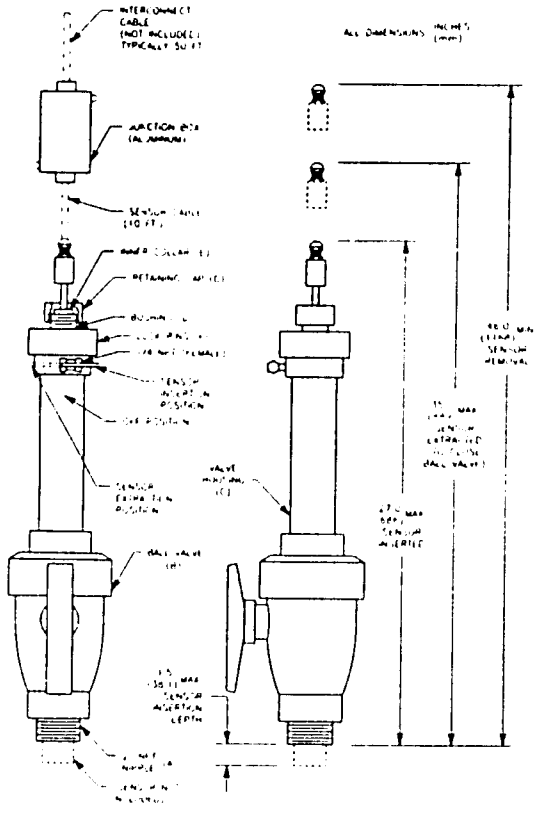

Model 6010P0 and 6410P0 pH Sensors and MH100-series Mounting Hardware Assembly

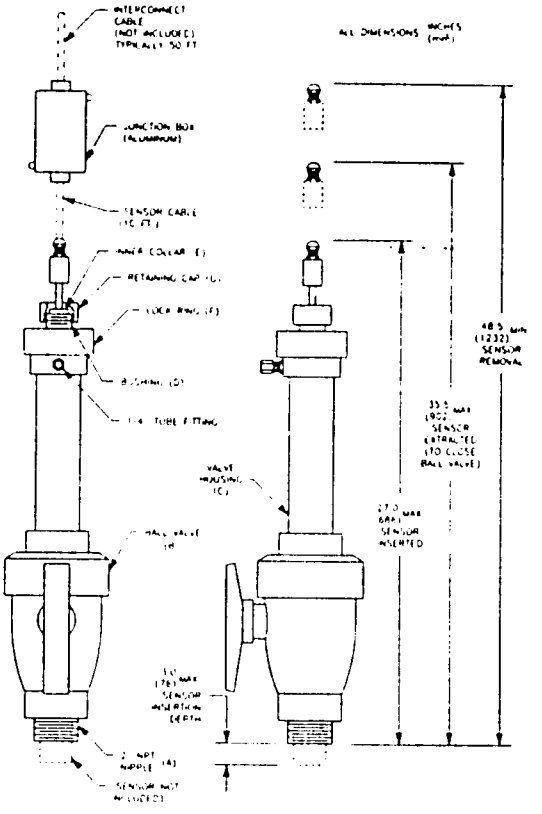

Represented By:

Great Lakes Instruments, Inc.
8855 N. 55th Street
Milwaukee, WI 53223

Telephone (414) 355-3601
Telefax (414) 355-8346

GREAT LAKES INSTRUMENTS

A Schott Group Company

Data Sheet FTA/ Printed in U.S.A.

Industrial Combination Sensors
(For Flow-Thru and Submersion Applications)

pH/ORP

Data Sheet 6300/1293
Supersedes 6300/693

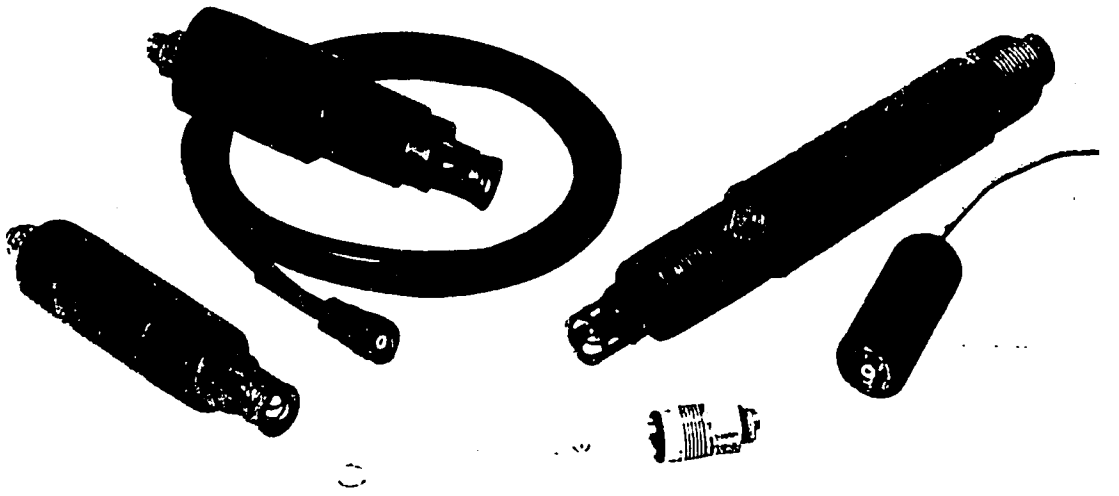

Assorted Styles Shown With Detachable Cable, Replacement Electrode And Optional Signal Conditioning Module

FEATURES

- Field-replaceable combination electrode
- Detachable, reusable coaxial cable
- Submersion, flow-thru and union-mount capability
- Durable materials for excellent chemical resistance
- Industrial-grade quality at low cost
- With or without temperature compensation
- Detachable preamplifier and two-wire transmitter modules

Introduction

These industrial-grade combination pH and ORP sensors provide an economical alternative in acceptable applications. These sensors feature a field-replaceable combination electrode with a patented plug head connector to simplify servicing and maintenance. Cost of ownership is reduced significantly because the sensor body and detachable cable are reusable.

Sensor Styles And Mountings

A variety of sensor styles are offered:

- Submersion-mount style sensors have 1-inch NPT threads to attach a 1-inch diameter length of pipe with a coupling. This style is available with a CPVC or PVDF sensor body and features a removable cover of the same material and Viton O-ring seals. Optional PVC, CPVC or PVDF submersion mounting hardware facilitates installation. When temperature compensation is required, separate temperature sensors and associated mounting hardware are available.
- Flow-thru mount style sensors are offered in two versions – with integral temperature compensation (for pH measurement only) or without. Both versions are available with CPVC or PVDF sensor bodies. Sensors without temperature compensation thread directly into a standard 1-inch plastic or stainless steel pipe tee. Sensors with integral temperature compensation require a special 1-inch plastic tee (PVC, CPVC or PVDF is available), or can be mounted into a standard 1-inch stainless steel tee.
- Union-mount style sensors are available with and without temperature compensation, but in CPVC sensor body material only. Both union-mount sensor versions require a special 1-inch CPVC tee included with the optional MH534N9AZ union-mount hardware.

SCHOTT GREAT LAKES INSTRUMENTS

112

ORDERING INFORMATION

– Industrial Combination Sensors –

	Sensor Style	Body Material	Temperature Compensation	Product Number	Dimensions (See Page 4)	Recommended Mtg. Hardware
pH	Submersion Mount	CPVC	No	6343P500P	Figure 1	See Column A below
		PVDF	No	6346P500P		
	Flow-Thru Mount	CPVC	No	6333P500P	Figure 2	See Column B below
		PVDF	No	6336P500P		
		CPVC	Yes (for use with any 714-series preamp)	6333P5T0P	Figure 3	See Column C below
			Yes (for use with P73 analyzer)	6333P5P0P		
		PVDF	Yes (for use with any 714-series preamp)	6336P5T0P		
			Yes (for use with P73 analyzer)	6336P5P0P		
	Union Mount	CPVC	No	6353P500P	Figure 2	See Column D below
			Yes (for use with any 714-series preamp)	6353P5T0P	Figure 3	
			Yes (for use with P73 analyzer)	6353P5P0P		
ORP	Submersion Mount	CPVC	No	2343R500P	Figure 1	See Column A below
		PVDF	No	2346R500P		
	Flow-Thru Mount	CPVC	No	2333R500P	Figure 2	See Column B below
		PVDF	No	2336R500P		
	Union Mount	CPVC	No	2353R500P	Figure 2	See Column D below

- Mounting Hardware -

COLUMN A For Submersion Sensors		COLUMN B For Flow-Thru Sensors Without Temperature Compensation		COLUMN C For Flow-Thru Sensors With Temperature Compensation		COLUMN D For Union Sensors	
Description	Product Number	Description	Product Number	Description	Product Number	Description	Product Number
CPVC Hardware	MH434A00Z	PVC Tee (1-inch)	MH374N4NZ	CPVC Tee (1-inch, specially modified)	MH334N9NZ	CPVC Tee (1-inch, specially modified), Viton O-ring and PVC lock ring	MH534N9AZ
PVDF Hardware	MH464A00Z	316 SS Tee (1-inch)	MH314N4NZ	PVDF Tee (1-inch, specially modified)	MH364N9NZ		
PVC Hardware	MH474A00Z	CPVC Tee (1-inch)	MH334N4NZ	316 SS Tee (1-inch, standard)	MH314N4NZ		
Submersion mounting hardware includes a 1-inch diameter x 4 ft. long pipe and a 1-inch x 1-inch coupling of the same material.		PVDF Tee (1-inch)	MH364N4NZ				

Accessories/Spare Parts (order separately):

– Sensor Coaxial Cables –

	Product Number*	Cable Length
pH	GL1BNC	1 meter
	GL2BNC	2 meter
	GL3BNC	3 meter
ORP	L1BNC	1 meter
	L2BNC	2 meter
	L3BNC	3 meter

*Cable terminated with BNC connector. To order with tinned wire or spade lug termination, substitute "T" or "S" respectively for "BNC" in product number.

– Interconnect Cables –

- **99X1W1055 6-Wire Cable**
  (5 cond. plus shield) for wire runs between preamplifier and analyzer.
- **99X1W0980 3-Wire Cable**
  (2 cond. plus shield) for wire runs between 2-wire transmitter and analyzer.

– Signal Conditioning Modules –

- **Model 714-1900◊ Preamplifier**
  For use with pH and ORP sensors. Output is not temperature compensated. Refer to data sheet 714 for remote preamps that have fixed, automatic or adjustable temperature compensation.
- **Model 697P5◊ 2-Wire pH Transmitter**
  Provides uncalibrated 4-20 mA output proportional to 0-14 pH.
- **Model 697R5◊ 2-Wire ORP Transmitter**
  Provides uncalibrated 4-20 mA output proportional to (-)1000 to (+)1000 mV.

◊ Module has integral 10 ft. cable terminated with tinned wires.

– pH Buffers–
(in resealable plastic bottles)

- **99X3A0421 pH 7** (1 pint)
- **99X3A0422 pH 4** (1 pint)
- **99X3A0942 pH 10** (1 pint)

– Spare Electrodes –

- **99X1E1095 pH Electrode**
- **PT7781 ORP Electrode** (platinum)

– Temperature Sensor –
(for sensors w/o temp. comp.)

- **60A2A9860-1XX Sensor**
  (300 ohm thermistor - 50 ft. cable)
- **60A2A9704-1XX Sensor**
  (1000 ohm RTD - 11 ft. cable)

Stainless steel construction, 1/4" O.D., cable w/ stripped wire termination. Specify insertion length in inches (6 inches to 18 inches available in 1 inch increments) by substituting inches for "xx" in part number.

- **99X4H1278 Temperature Sensor Mounting Hardware**
  1/4" NPT, 95°C at 100 psi max. temperature /pressure. Includes 99X4H1171 ferrule**, 99X4H1172 compression nut and fitting body.

**Required spare part when replacing sensor

All three sensor styles require a detachable coaxial cable (ordered separately) for connection to the indicating instrument or a remote preamplifier. Cable lengths of 1, 2 and 3 meters are offered with a choice of BNC plug, spade lug or tinned wire termination for the instrument connection.

Optional Signal Conditioning Modules

The epoxy-encapsulated Model 714-1900 preamplifier module is available to eliminate the need for a remote preamp to interface the indicating instrument. It conveniently connects to the electrode plug head in place of the detachable cable. The module has an integral 10 foot cable terminated with tinned wires for connection to the instrument. The preamplifier does not provide temperature compensation. If fixed, automatic or adjustable temperature compensation is required, remote-mount Model 714-series preamplifiers are available. Refer to data sheet 714 for details.

The Model 697P5 two-wire transmitter module provides a 4-20 mA output proportional to the measured pH. The two-wire 4-20 mA output is non-isolated, uncalibrated and not temperature compensated. The measuring system's indicating instrument must be able to provide 24 VDC to power the 697P5 module and have adjustment capability to calibrate for offset and span. The Model 697P5 connects directly to the electrode in the same way as the 714-1900 module, is identical dimensionally and has the same integral cable termination choices.

For combination ORP sensors, the Model 697R5 provides a two-wire, non-isolated, uncalibrated 4-20 mA output proportional to the measured ORP (-1000 to +1000 mV).

SPECIFICATIONS▲

	pH Sensors	ORP Sensors
Wetted Materials	CPVC or PVDF body, ceramic junction, glass process electrode, and Viton O-ring seal.	CPVC or PVDF body, ceramic junction, glass with platinum process electrode, and Viton O-ring seal.
Measuring Range	0-14 pH*	(-)2000 to (+)2000 millivolts
Performance:		
Sensitivity	Less than 0.01 pH	Less than 1.0 mV
Stability	0.05 pH/24 hrs. non-cumulative	3 mV/24 hrs. non-cumulative
Output Impedance	250 megohms (typical)	2.0 megohms (typical)
For Sensor With Optional Two-Wire Transmitter Module:		
Output Span	0.95 mA per pH unit	16 mA per 1000 mV
Output Offset	12 mA occurs at 7.0 pH ± 0.88 pH	12 mA occurs at 0 mV ± 40 mV
Load at 20 mA	450 ohms	450 ohms

NOTE: The module's 4-20 mA output is non-isolated and uncalibrated. The measuring system's indicating instrument must be able to provide 24 VDC to power the module and have adjustment capability to calibrate for offset and span.

Temperature/Pressure Limits For GLI Sensor/Mounting Hardware Combinations:

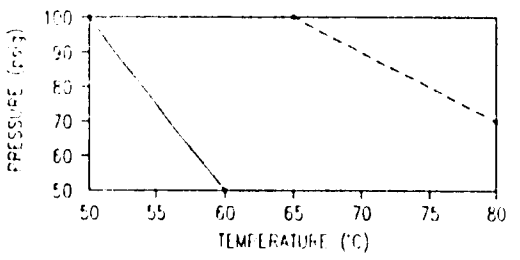

—— CPVC Sensor With PVC Hardware

– – – CPVC or PVDF Sensor With CPVC or Steel Hardware

Maximum Flow Rate ..... 10 feet per second. *NOTE: If possible, flow rate should be minimal for low conductivity water or solutions high in suspended solids.*

Sensor Cable ..... Detachable, 2-conductor coaxial with electrode plug head connector (ordered separately - see page 3). Sensors with temperature compensation have an additional 2-conductor 10 ft. cable terminated with tinned wires.

Sensor-To-Analyzer Distance ..... 10 feet maximum without an optional signal conditioning module.
With 714-1900 Preamp Module: 2000 feet maximum.
With 697P5/697R5 2-Wire Transmitter Module: Limited only by wire resistance and power supply voltage.

▲ Subject to change without notice.

* Most pH applications fall in the 2.5-12.5 pH range. General purpose pH glass electrodes perform well in this range. Some industrial applications require accurate measurements and control at pH values below 2 or above 12. Consult GLI for details on these applications.

DIMENSIONS

Figure 1
Submersion Mount Sensor

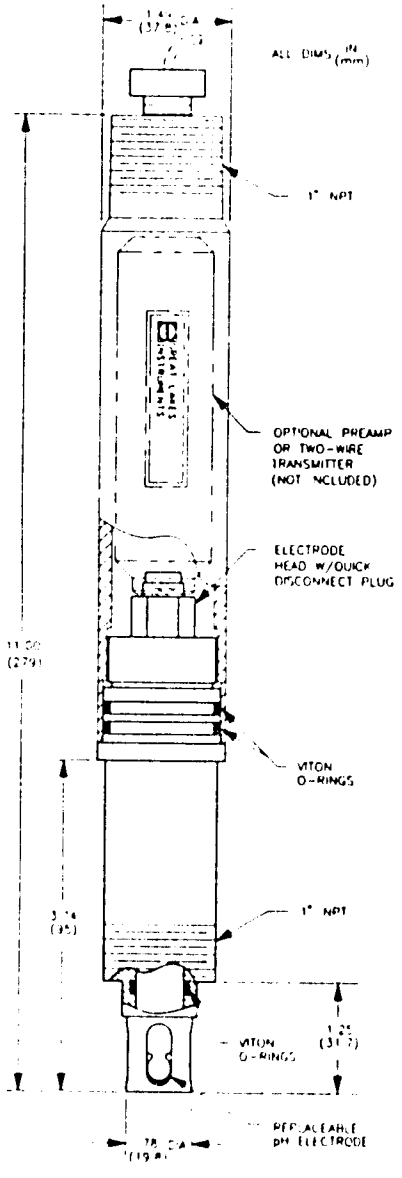

Figure 2
Flow-Thru & Union Mount Sensor Without Temp. Comp.

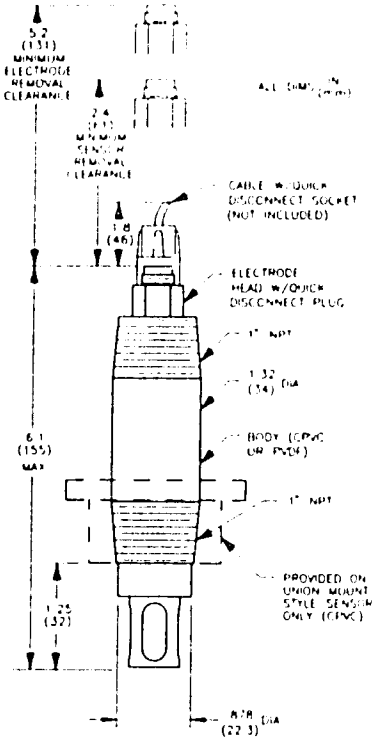

Figure 3
Flow-Thru & Union Mount Sensor With Temp. Comp.

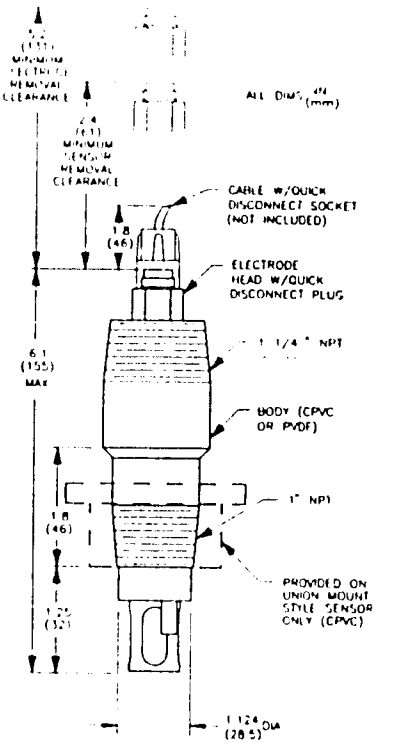

Encapsulated Modules
(Models 714-1900, 697P5 and 697R5)

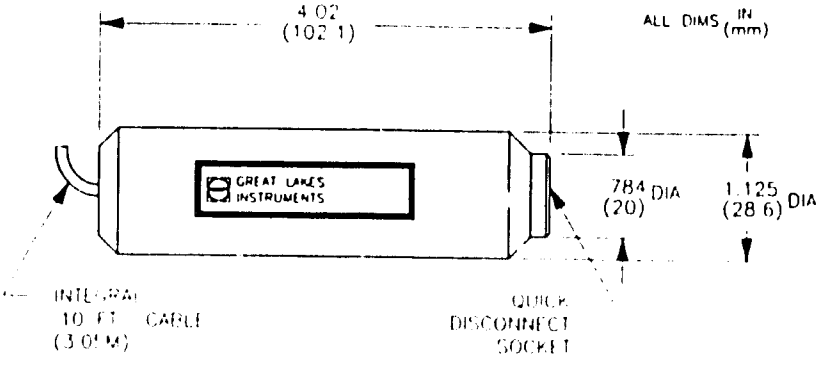

Represented By:

Great Lakes Instruments, Inc.
8855 N. 55th Street
Milwaukee, WI 53223

Telephone (414) 355-3601
Telefax (414) 355-8346

GREAT LAKES INSTRUMENTS

A Schott Group Company

Data Sheet 6300/Printed in U.S.A.

Epoxy-Encapsulated pH/ORP Sensors

(With Integral Preamplifier or Two-Wire Transmitter)

pH/ORP

Data Sheet Epoxy/593
Supersedes Epoxy/1091

FEATURES

- Patented Differential Electrode Technique* minimizes measurement errors caused by ground loop currents, reference electrode contamination and precipitate buildup
- Complete encapsulation eliminates moisture problems
- Convertible mounting style consolidates inventory to reduce associated costs
- Complete mounting hardware assemblies for easy installation

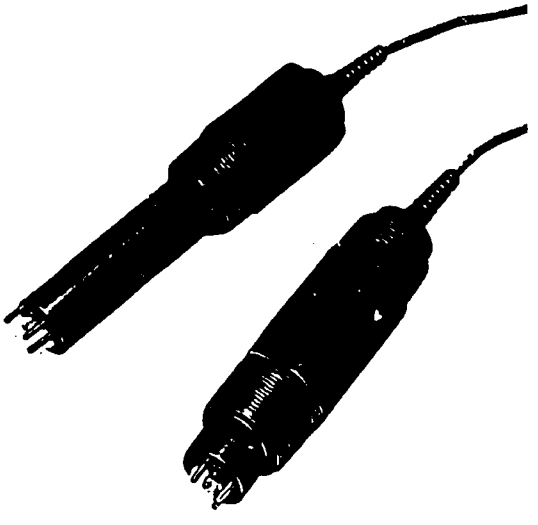

Description:

These epoxy-encapsulated pH and ORP sensors are ideal for applications in which the media is moderately aggressive, such as wastewater, and where epoxy is an acceptable wetted material. Operating limits for these economical sensors are –5 to 65°C and 4 to 10 pH.

GLI's patented, field-proven Differential Electrode Measurement Technique* is combined with rugged, long-lasting packaging and a reliable design to insure that these sensors stay "on-line" and provide accurate measurements under conditions that often render conventional pH sensors inoperable.

GLI's Differential Electrode Measurement Technique uses a process electrode and a "standard electrode" to make the measurement differentially with respect to a solution ground electrode. The glass electrode in the "standard electrode" chamber is immersed in a buffered pH 7 solution. This inner chamber completes the electrical circuit with the process solution through a double-junction salt bridge. GLI's uniquely constructed "standard electrode" provides the stability and accuracy for which differential measurements are known. For complete details about GLI's Differential Electrode Measurement Technique, refer to Bulletin SB-1.

The sensor electronics are completely encapsulated to eliminate moisture and high humidity problems. These pH and ORP sensors are offered with an integral preamplifier or two-wire transmitter which provides a 4-20 mA output proportional to pH. The two-wire 4-20 mA output is non-isolated and uncalibrated. The measuring system's indicating instrument must be able to provide 24 VDC to power the sensor and have adjustment means to calibrate for offset and span. The pH sensor also includes a temperature sensor to automatically compensate pH measurements for process temperature variations.

These epoxy-encapsulated sensors have a distinctive hex-shaped body to facilitate installation. Because threads are provided on both ends, the sensor may be mounted into a pipe tee or attached to the end of a pipe for submersion applications. This "convertible" mounting style allows consolidation of inventory to reduce associated costs. A union-mount style sensor and mounting tee are also available for in-line service that provides convenient installation and removal.

Optional mounting hardware assemblies are offered in a variety of materials. Each assembly includes a pipe-mount or surface-mount junction box with terminal strip. Refer to page 3 for complete hardware descriptions. Interconnect cable is sold separately for wire runs between the junction box and instrument.

*U.S. Patent 3862895

SCHOTT GREAT LAKES INSTRUMENTS

Accessories (ordered separately):

- 99X1W0980 Interconnect Cable◊ (2-wire plus shield)
- 99X1W1055 Interconnect Cable◊ (5-wire plus shield)
- pH Buffers (in resealable in plastic bottles)
  - 99X3A0421 pH 7 (1 pint)
  - 99X3A0422 pH 4 (1 pint)
  - 99X3A0942 pH 10 (1 pint)

◊ Typically, 50 ft. is recommended for each installation.

MOUNTING HARDWARE ASSEMBLIES

Figure 1 — Submersion Mounting

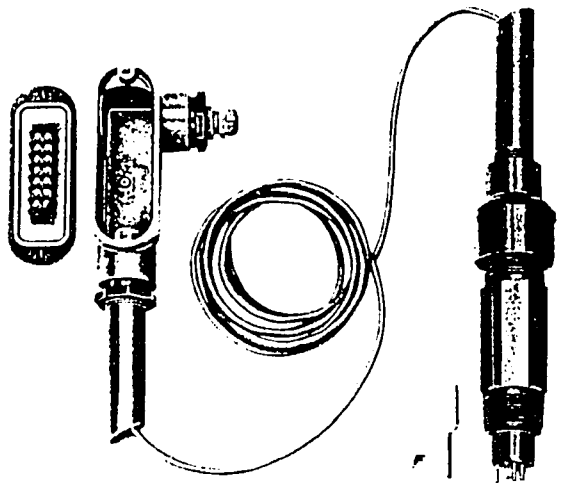

Part No.	Description
MH474B	1" x 4' PVC pipe and coupling with PVC pipe-mount junction box
MH434B	1" x 4' CPVC pipe and coupling with PVC pipe-mount junction box
60A2F1278	Protector (order separately)

NOTE: Sensor and interconnect cable are not included and must be ordered separately.

Figure 2 — Flow-Thru Mounting

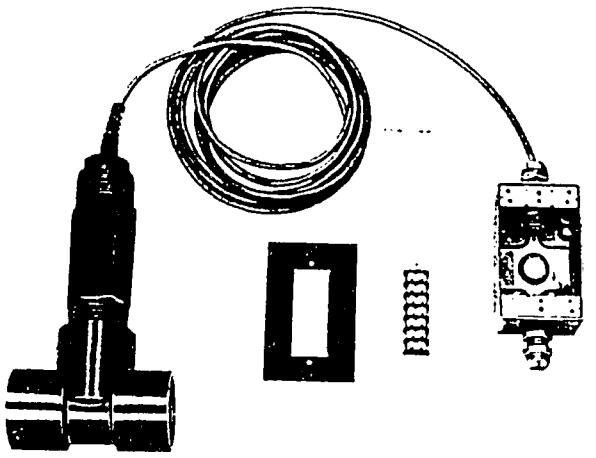

Part No.	Description
MH376	1½" PVC tee and aluminum junction box
MH336	1½" CPVC tee and aluminum junction box
MH316N	1½" stainless (316) tee and aluminum junction box
MH346X	1½" stainless (304) cross and aluminum junction box

NOTE: Sensor and interconnect cable are not included and must be ordered separately.

Figure 3 — Union Mounting

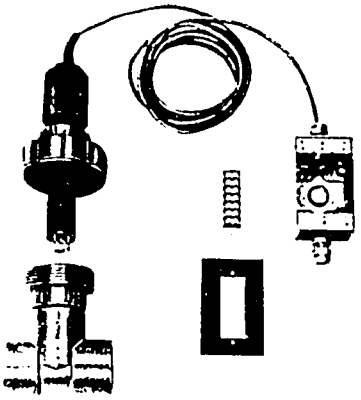

Part No.	Description
MH576	1½" PVC tee w/union and aluminum j-box
MH536	1½" CPVC tee w/ union and alum. j-box

NOTE: Sensor and interconnect cable are not included and must be ordered separately.

Plastic Mounting Hardware Ratings

The maximum operating temperature rating for epoxy sensors when used with PVC mounting hardware is 60°C at 50 psi or 50°C at 100 psi. When CPVC hardware is used, the rating increases to 65°C at 100 psi. When epoxy sensors are used with a stainless steel tee or cross, the rating is 65°C at 75 psi or 50°C at 100 psi.

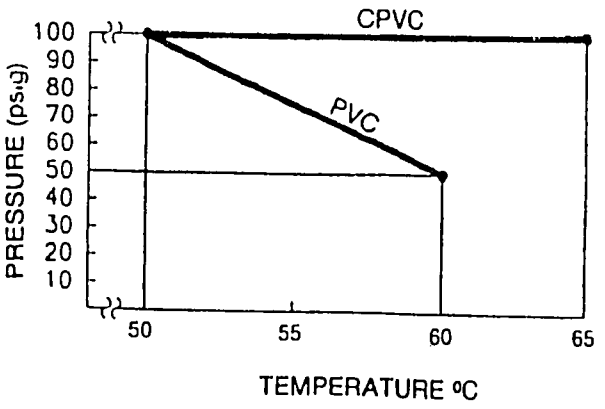

147

SPECIFICATIONS▲

Minimum Temperature	-5°C (23°F)
Maximum Temperature	In PVC tee: 60°C at 50 psig or 50°C at 100 psig In CPVC tee: 65°C at 100 psig In steel tee: 65°C at 75 psig or 50°C at 100 psig
Maximum Pressure	In PVC tee: 100 psig at 50°C or 50 psig at 60°C In CPVC tee: 100 psig at 65°C In steel tee: 100 psig at 50°C or 75 psig at 65°C
Maximum Flow Rate	10 feet per second. *NOTE: If possible, flow rate should be minimal for low conductivity water or solutions high in suspended solids.*

	pH Sensors	ORP Sensors
Wetted Materials	Epoxy body, liquid crystal polymer (LCP) salt bridge w/PVDF (or ceramic) junction, glass process electrode, titanium palladium ground electrode, Viton O-ring seal and RTV sealant.	Same as pH sensors except process electrode is glass with platinum or gold.
Measuring Range	4-10 pH❖	(-)2000 to (+)2000 mV
Performance:		
Sensitivity	Less than 0.005 pH	Less than 0.5 mV
Stability	0.03 pH per 24 hrs. non-cumulative	2 mV per 24 hrs. non-cumulative
For Sensor w/2-wire Transmitter:		
Output Span	0.95 mA per pH unit	16 mA per 1000 mV
Output Offset	12 mA occurs at 7.0 pH ± 0.88 pH	For (-)500 to (+)500 mV range: 12 mA occurs at 0 mV ± 40 mV For 0 to 1000 mV range: 12 mA occurs at 500 mV ± 40 mV
	NOTE: The 4-20 mA output is non-isolated and uncalibrated. The measuring system's indicating instrument must be able to provide 24 VDC to power the sensor and have adjustment means to calibrate for offset and span.	
Load at 20 mA	450 ohms	450 ohms

Sensor Cable	Sensors w/preamplifier: 5 conductor (plus shield), 10 ft. (3 m) length Sensors w/2-wire transmitter: 2 conductor (twisted pair), 10 ft. (3 m) length
Transmission Distance	Sensor w/Preamplifier: 3000 ft. (914 m) maximum Sensor w/2-wire Transmitter: Limited only by wire resistance and power supply voltage

▲Subject to change without notice.

❖For pH applications below 4 or above 10, it is recommended to use a liquid crystal polymer (LCP)-encapsulated pH sensor. Refer to GLI data sheet LCP for details.

ORDERING INFORMATION

TYPE OF MEASUREMENT

- **20** ORP, 5-wire (with integral preamplifier)
- **24** ORP, 2-wire (with integral two-wire transmitter and 4-20 mA output)
- **60** pH, 5-wire (with integral preamplifier)
- **64** pH, 2-wire (with integral two-wire transmitter and 4-20 mA output)

MOUNTING STYLE

- **2** Convertible (submersion or flow-thru mount) with integral 10 ft. (3 m) cable. See note below.
- **5** Union-mount (requires 1-1/2" union tee) with integral 10 ft. (3 m) cable

BODY MATERIAL

- **1** Epoxy

ELECTRODE MATERIAL

- **P0** Glass, general purpose (For pH only)
- **R0** Platinum } For ORP only
- **R1** Gold }

1	**Product Number**

Choose one from each category.

NOTE: When convertible mounting style sensor is submersion mounted, order 60A2F1278 protector.

DIMENSIONS AND MOUNTING

Convertible Style Sensor

Sensor Number

5-Wire
pH: 6021P0
ORP: 2021R0
2-Wire
pH: 6421P0
ORP: 2421R0

(protector for submersion use must be ordered separately)

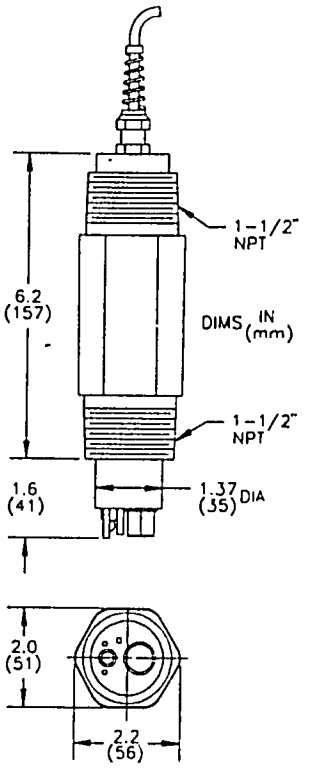

Union-Mount Style Sensor

Sensor Number

5-Wire
pH: 6051P0
ORP: 2051R0
2-Wire
pH: 6451P0
ORP:2451R0

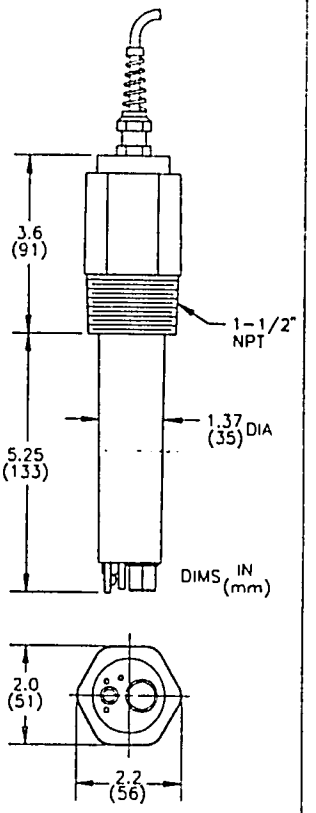

Mounted In Flow-Thru Tee

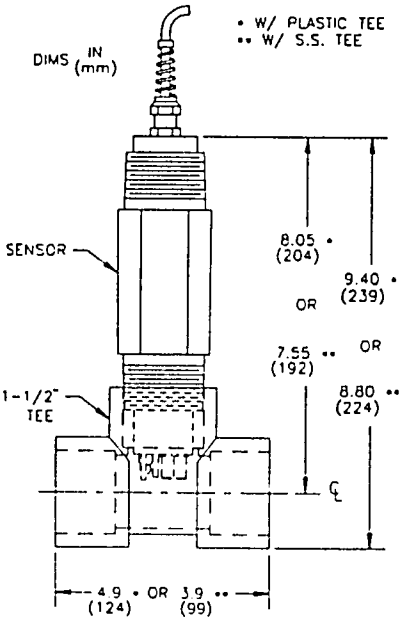

Mounted In Union Tee

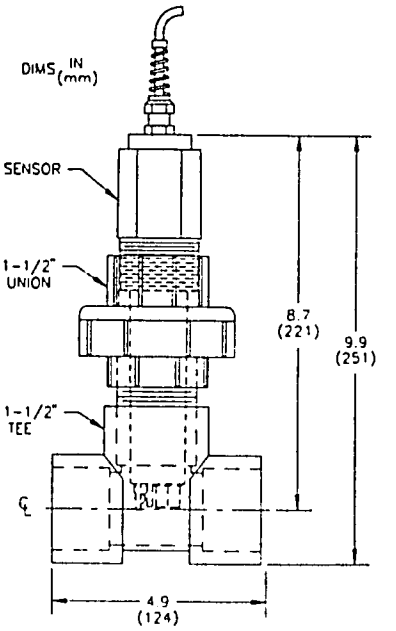

Represented By:

Great Lakes Instruments, Inc.
8855 N. 55th Street
Milwaukee, WI 53223

Telephone (414) 355-3601
Telefax (414) 355-8346

GREAT LAKES INSTRUMENTS

A Schott Group Company

Data Sheet Epoxy/ Printed in U.S.A.

199

APPENDIX G

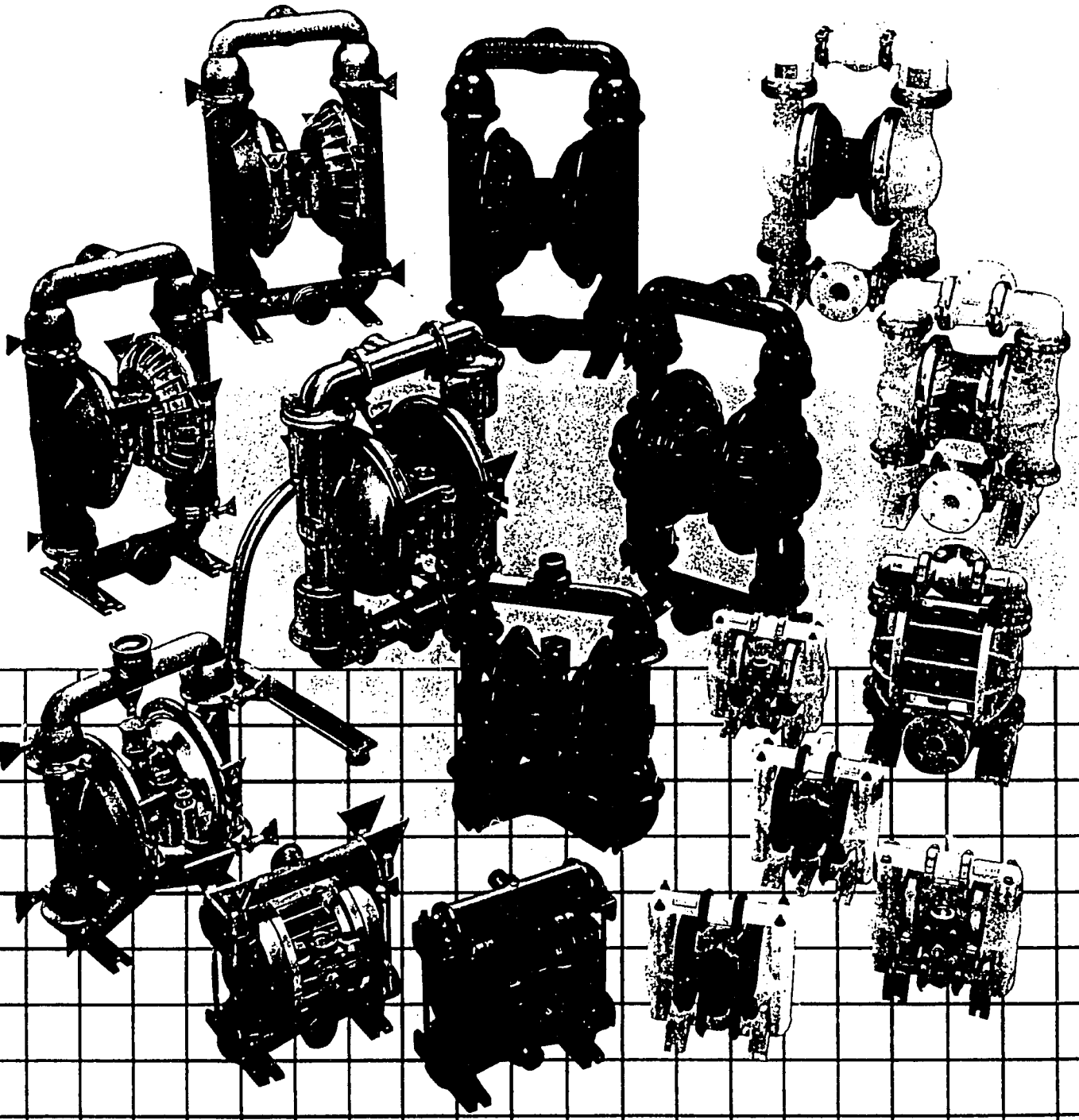

WILDEN PUMP & ENGINEERING CO.®

201

WILDEN PUMP & ENGINEERING COMPANY

Wilden Pump and Engineering Company pioneered the concept and practical design of the air-operated, double-diaphragm pump thirty years ago. We proved its practicality then and through constant improvements in manufacturing techniques and state-of-the-art engineering, have maintained this position of leadership. In recent years, several companies have produced copies, which in many cases look like, but are unable to meet the high standards of performance and reliability of the Wilden® pump. Manufacturing is done in our modern, 150,000 square foot, Southern California facility using the most accurate CNC machine centers available. Efficient assembly techniques are used to assure quality, and each and every pump is hydrostatically and functionally tested against standards established by Wilden® to guarantee a reliability and economy that no look alike can match.

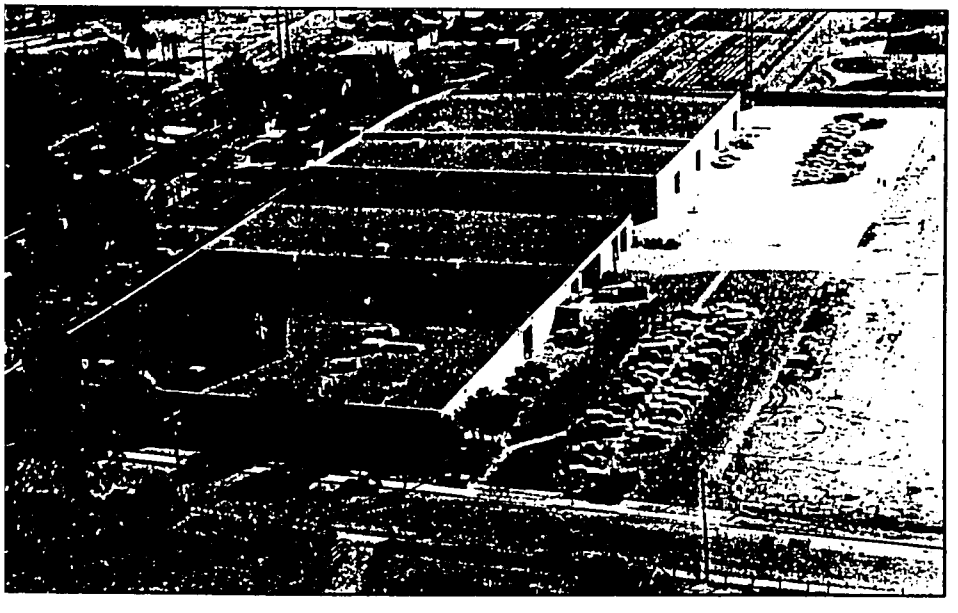

Reliability is our cornerstone: Simplicity, performance, and versatility form our foundation.

Wilden® pumps are sold through stocking distributors located in every major city in the United States and throughout the free world. Computer controlled order processing and shipping assure timely response. We have the capability, when necessary, to manufacture and ship on a same-day basis. Wilden® manufactures only air-operated, double-diaphragm pumps, in a variety of materials and sizes, and we do it better than anyone else in the world.

Wilden® air-operated, double-diaphragm pumps are designed to handle all types of Newtonian and Non-Newtonian fluids. They are the most versatile process pumps available. They are designed to handle viscosities from solvents to caulking compounds, up to 1,000,000 SSU, solids laden abrasive slurries, up to 80 percent solids, many dry powders, and high and low PH chemicals. Wilden® pumps have earned a reputation for reliability, low maintenance, and minimal down time.

Wilden® offers the broadest, most complete line of air-operated, double-diaphragm pumps available. Five sizes with flows from ounces to over 14,000 gallons per hour. Wilden® pumps are available in. aluminum, cast iron, 316 stainless steel, Hastelloy C, polypropylene, PVDF and Teflon® PFA. Diaphragms are available in: Neoprene, Polyurethane, Buna-N, Nordel, Hypalon, Viton, Saniflex,™ and the exclusive patented Wilden designed Teflon® diaphragm.

Teflon® is a Registered Trademark of E.I. Dupont

Advantages

COMPARISON CHART

	WILDEN®	Centrifugal	P.D. Gear	P.D. Lobe	P.D. Vane	Self-Priming Trash	Progressive Cavity	Piston/Plunger	Rotary Screw	Vortex	Regenerative Turbine
Dry, self-priming suction up to 20'	●		●	●	●	●		●			●
Variable speed	●										
Variable pressure (up to 300 PSI — with HP model)	●										
No mechanical seals	●								●		
Explosion Resistant	●	●									
Submersible	●	●								●	●
Completely portable	●					●					
No rotating parts (or ball bearings)	●										
Can run dry without damage	●										
No couplings required	●										
Dead head capability (w/o bypass valves)	●										
No efficiency loss due to wear	●										
No efficiency loss due to changing pressure or flow	●										
Complex controls not required	●				●						
Does not generate heat	●										
Handles abrasive fluids	●	●			●					●	●
Handles abrasive, high viscosity fluids	●										
Handles non-abrasive, high viscosity fluids	●		●	●	●		●	●	●		
Handles abrasive highly corrosive fluids	●	●								●	
Handles non-abrasive, highly corrosive fluids	●	●	●	●	●	●	●	●	●		●
One unit handles many types of materials	●					●		●			
Operating temperature from -30°F to over 300°F	●	●	●	●	●	●	●	●	●	●	●
Ideal for shear sensitive products	●			●							

Wilden pumps feature:

1. Infinitely variable capacity and discharge pressure range by simply adjusting inlet air supply to the pump. No need for costly, variable-speed motors or variable drives. Also eliminates critical selection calculations. One pump fits a broad spectrum of applications.
2. No shaft seals or packing glands to maintain.
3. Wilden runs dry indefinitely without damage.
4. Completely self-priming from a dry start on suction lifts. May also be completely submerged, or installed with flooded suction.
5. No pressure relief or bypass piping required because pump pressure never exceeds air inlet pressure.
6. Pump discharge may be closed as long as required and virtually no power consumed, no heat build-up, no movement; so no wear. Yet, when called upon, opening of valve permits immediate product flow.
7. Safe for use in explosive environments. No electrical hazards or costly motor and control equipment needed.
8. Minimum effect on shear sensitive materials.
9. No close fits, no precision adjustments. Wilden® clamp bands make assembly very easy.
10. No close-fit sliding or rotating parts. This, combined with low internal velocities, make the Wilden pump ideal for handling abrasive, viscous materials.
11. Quiet operation. Permits use in any location without discomfort to people nearby.
12. High pressure capability up to 125 psi. The use of compressed air, to balance liquid pressure across the diaphragm permitting high discharge pressure capability without stressing the diaphragm.

Wilden® is a Registered Trademark of Wilden Pump and Engineering Co.

THE WILDEN® PUMP — HOW IT WORKS

Compressed air is applied directly to the liquid column separated by elastomer diaphragms. This balanced load removes the mechanical stress from the diaphragms to allow high heads and thousands of hours of diaphragm life.

The pumping volume is controlled by easy inlet air adjustments, from a few gallons per hour to over fourteen thousand gallons per hour with the same unit. A by-pass valve is not required because the pump stops when discharge pressure equals air inlet pressure. The pump can also run dry indefinitely without damage. Our double diaphragm design cuts velocity through the pump to half total discharge velocity. The most abrasive slurries produce little wear effect on pump parts.

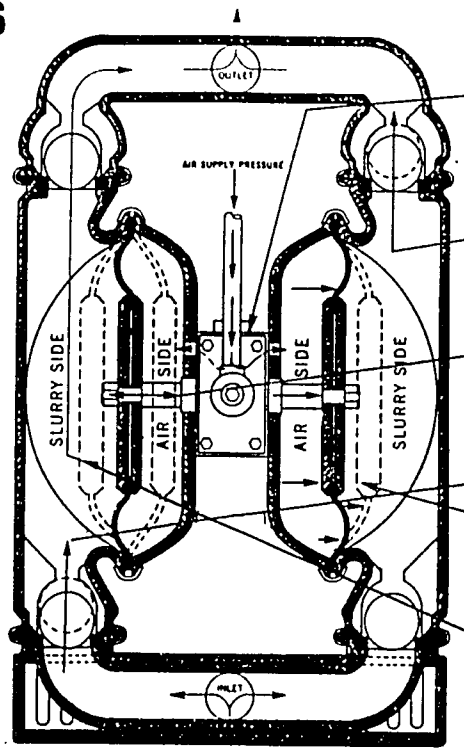

Patented, one-moving-part air valve directs air supply pressure to back side of diaphragm.

Slurry is pushed out of liquid chamber through pump outlet.

At the same time opposite diaphragm is pulled in by shaft connected to pressurized diaphragm.

Suction created draws slurry into liquid chamber through pump inlet.

When pressurized diaphragm reaches limit of stroke, air valve shifts air supply pressure to air side of opposite diaphragm.

Slurry is then pushed out of liquid chamber through pump outlet.

USE THIS VERSATILE PUMP

In Permanent Installations, Submerged Operations, Self-Priming. Fixed or Portable.

Permanent Installations — no foundations, no electrical controls required; handles sludges, slurries, acids, explosives, abrasives; 4 clamps remove it from permanent piping.

Submerged Operation — for construction, industrial pumping; handles mud, sand, mill scale, grout, sludges; lightweight and portable.

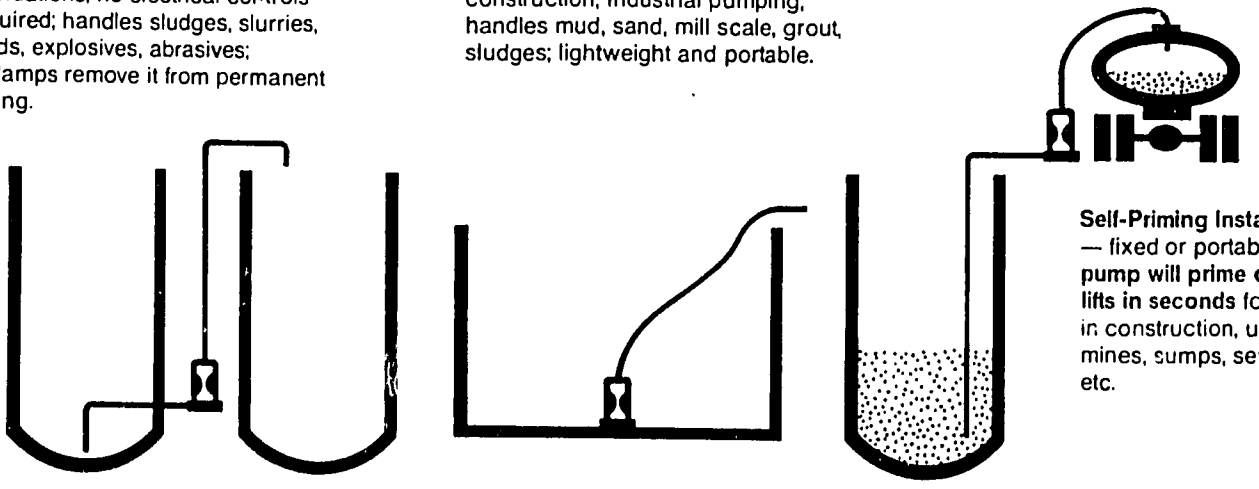

Self-Priming Installation — fixed or portable, the **pump will prime dry to 20 ft. lifts in seconds** for use in construction, utilities, mines, sumps, sewers, etc.

204

DESIGNED FOR SIMPLICITY IN OPERATION & MAINTENANCE

Simple clamp band fasteners provide for quick, effective takedown and assembly.

Wilden® uses clamp bands for component fasteners for some very important reasons:

Convenience. No other type of fastener provides the speed and ease of installation.

Security. The clamp fits over a tapered flange. The mechanical advantage turns every pound of radial clamping force into about three pounds of axial face to face sealing force. Simple complete integrity.

Compact. Clamp band fasteners are about 40 percent smaller than bolted or flanged bolted connections and can be accessed more easily for removal or adjustment in tight locations.

The Wilden® clamp band design allows the valve seats and diaphragms to serve as gaskets — nothing else needed. Remove 4 clamps and pump is separated from permanent piping; remove 2 other clamps and diaphragms can be inspected or replaced. The unique Wilden® construction saves hours of maintenance, inspection, or repair time.

Pumps are available with wetted parts in: aluminum, cast iron, 316 stainless steel, Hastelloy C, polypropylene, PVDF and Teflon® PFA. Non-wetted portions are available in: aluminum, cast iron, stainless steel, nickel-plated, and polypropylene*.

Ball valves are available in: polyurethane, Neoprene, Buna-N, Nordel, Hypalon*, Viton*, Saniflex™ and Teflon®.

Valve seats are available in: polyurethane, Neoprene, Buna-N, Nordel, Hypalon, Viton, Saniflex™, aluminum, 316 stainless steel, Hastelloy C, mild steel, polypropylene, PVDF and Teflon® PFA.

Diaphragm materials available are: Neoprene, Buna-N, Nordel, Viton, Teflon®, Hypalon, polyurethane, Saniflex™ Hi-temp.

The patented Wilden® Teflon® diaphragm is available in all pump sizes. Reinforcing concentric rings molded into the diaphragm control flex and extend diaphragm life several times over a non-reinforced Teflon® diaphragm.

*Available in selected models, consult factory.

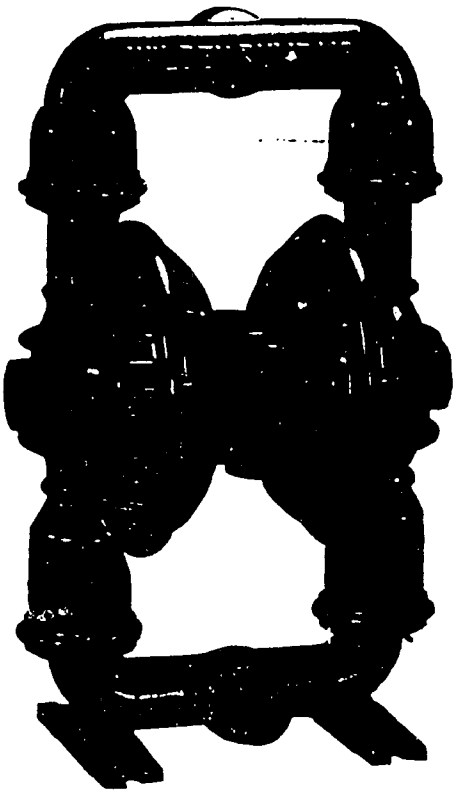

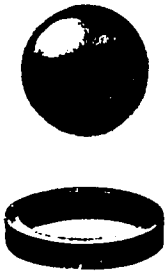

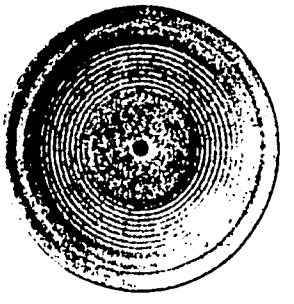

Wilden® models M-4, M-8, and M-15, in aluminum construction are available with screen-mounted inlet bases to prevent larger than acceptable solids from entering the pump.

Saniflex™ is a Trademark of Wilden Pump & Engineering Co.

THE WILDEN® PUMP — HOW IT WORKS

Compressed air is applied directly to the liquid column separated by elastomer diaphragms. This balanced load removes the mechanical stress from the diaphragms to allow high heads and thousands of hours of diaphragm life.

The pumping volume is controlled by easy inlet air adjustments, from a few gallons per hour to over fourteen thousand gallons per hour with the same unit. A by-pass valve is not required because the pump stops when discharge pressure equals air inlet pressure. The pump can also run dry indefinitely without damage. Our double diaphragm design cuts velocity through the pump to half total discharge velocity. The most abrasive slurries produce little wear effect on pump parts.

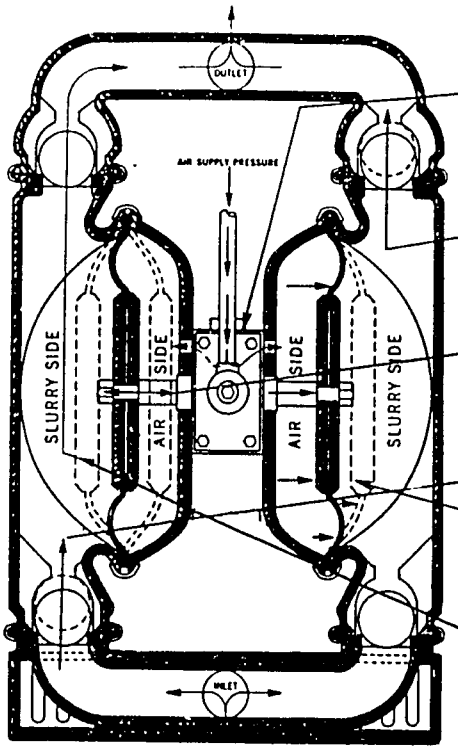

Patented, one-moving-part air valve directs air supply pressure to back side of diaphragm.

Slurry is pushed out of liquid chamber through pump outlet.

At the same time opposite diaphragm is pulled in by shaft connected to pressurized diaphragm.

Suction created draws slurry into liquid chamber through pump inlet.

When pressurized diaphragm reaches limit of stroke, air valve shifts air supply pressure to air side of opposite diaphragm.

Slurry is then pushed out of liquid chamber through pump outlet.

USE THIS VERSATILE PUMP

In Permanent Installations, Submerged Operations, Self-Priming. Fixed or Portable.

Permanent Installations — no foundations, no electrical controls required; handles sludges, slurries, acids, explosives, abrasives; 4 clamps remove it from permanent piping.

Submerged Operation — for construction, industrial pumping; handles mud, sand, mill scale, grout, sludges; lightweight and portable.

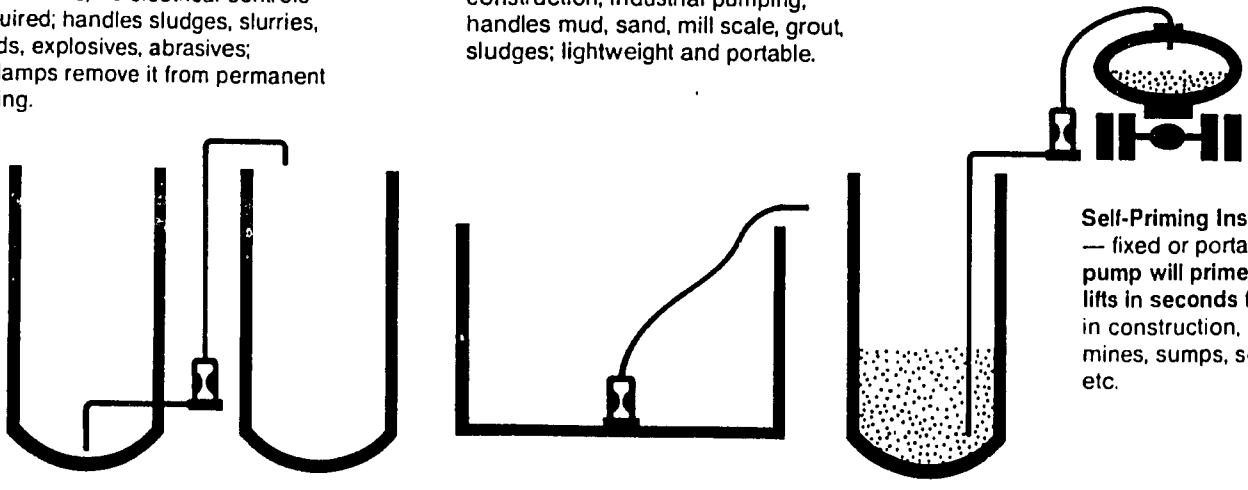

Self-Priming Installation — fixed or portable, the **pump will prime dry to 20 ft. lifts in seconds** for use in construction, utilities, mines, sumps, sewers, etc.

DESIGNED FOR SIMPLICITY IN OPERATION & MAINTENANCE

Simple clamp band fasteners provide for quick, effective takedown and assembly.

Wilden® uses clamp bands for component fasteners for some very important reasons:

Convenience. No other type of fastener provides the speed and ease of installation.

Security. The clamp fits over a tapered flange. The mechanical advantage turns every pound of radial clamping force into about three pounds of axial face to face sealing force. Simple complete integrity.

Compact. Clamp band fasteners are about 40 percent smaller than bolted or flanged bolted connections and can be accessed more easily for removal or adjustment in tight locations.

The Wilden® clamp band design allows the valve seats and diaphragms to serve as gaskets — nothing else needed. Remove 4 clamps and pump is separated from permanent piping; remove 2 other clamps and diaphragms can be inspected or replaced. The unique Wilden® construction saves hours of maintenance, inspection, or repair time.

Pumps are available with wetted parts in: aluminum, cast iron, 316 stainless steel, Hastelloy C, polypropylene, PVDF and Teflon® PFA. Non-wetted portions are available in: aluminum, cast iron, stainless steel, nickel-plated, and polypropylene*.

Ball valves are available in: polyurethane, Neoprene, Buna-N, Nordel, Hypalon*, Viton*, Saniflex™ and Teflon®.

Valve seats are available in: polyurethane, Neoprene, Buna-N, Nordel, Hypalon, Viton, Saniflex™, aluminum, 316 stainless steel, Hastelloy C, mild steel, polypropylene, PVDF and Teflon® PFA.

Diaphragm materials available are: Neoprene, Buna-N, Nordel, Viton, Teflon®, Hypalon, polyurethane, Saniflex™ Hi-temp.

The patented Wilden® Teflon® diaphragm is available in all pump sizes. Reinforcing concentric rings molded into the diaphragm control flex and extend diaphragm life several times over a non-reinforced Teflon® diaphragm.

*Available in selected models, consult factory.

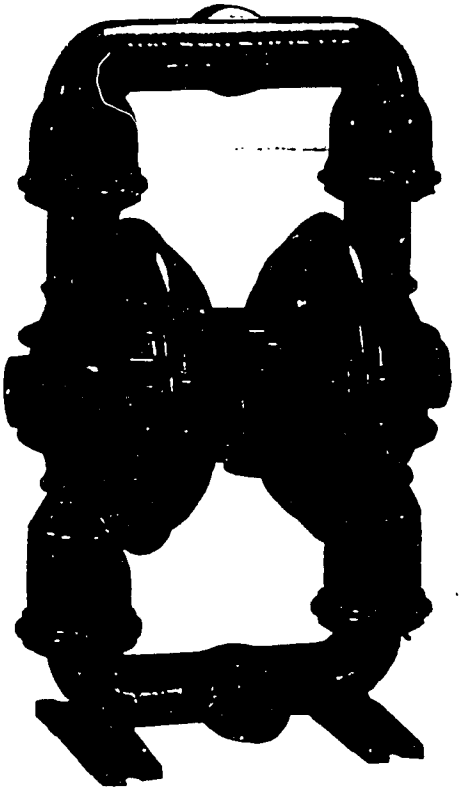

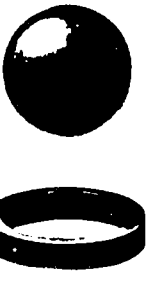

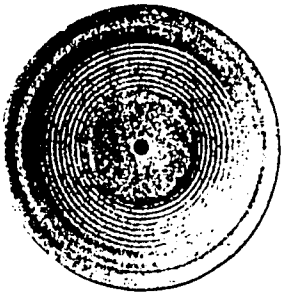

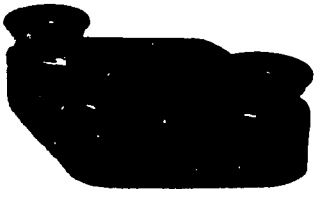

Wilden® models M-4, M-8, and M-15, in aluminum construction are available with screen-mounted inlet bases to prevent larger than acceptable solids from entering the pump.

Saniflex™ is a Trademark of Wilden Pump & Engineering Co.

WHY WILDEN® WORKS BEST

The heart of the Wilden® Air Operated Double Diaphragm Pump is the air valve which shifts the air supply to both diaphragms alternately with complete reliability under all conditions of head and flow. The patented Wilden® Air Valve, with over 30 years of proven superiority, performs this function with a simplicity in design and serviceability unequalled by any other shifting valve on the market.

Exclusive Air Valve

The patented Wilden® air valve has only one moving part. The single-piece piston is a special cast aluminum alloy which has been machined and hard anodized.

The Wilden® air-operated double diaphragm pump has achieved its role of leadership based on a unique air valve principle that does not require extremely close fitting parts. Instead of working with a tolerance of .0005 (½ mil) clearance as in other valves, the Wilden® air valve operates at a minimum clearance of .003 (3 mils) of an inch and will operate up to .010 (10 mils) of an inch with no loss of efficiency. This allows for the passage of most air line particulates and normal amounts of moisture can pass through the air valve without interference with its function.

Another feature of the Wilden® air valve, in addition to its reliability, is ease of serviceability. The Wilden® air valve is externally serviceable. Unlike many other air driven pumps, the Wilden® pump does not need to be disassembled to service the air valve. Removing four bolts makes the air valve easily available for inspection or service.

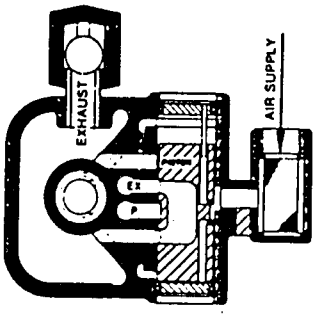

Wilden Pumps Give Dependable, Top Performance in the Most Rugged Pumping Jobs

Up to 90% solids and over 280' heads are no problem for the Wilden® pump. Oil, chemicals, sand, cement, abrasives, dry low density powders, slurries, acids, alkalis, mill scale, water — all are moved with ease and economy by Wilden® air operated pumps solving difficult pumping problems.

WILDEN'S AIR DISTRIBUTION SYSTEM

Every new Wilden® pump incorporates a redesigned, "state of the art" air distribution system, which provides up to 13 percent greater pumping capacity and reduced air consumption averaging over 10 percent across the entire performance range. This redesigned system focuses on optimizing air flow. Aerodynamically tuned ports and passageways minimize turbulence and drag, reducing internal energy losses, and maximizing energy transfer to the fluid being pumped. Casting techniques, such as die casting and injection molding, allow for the design of streamlined contours and provide smoother skin surfaces, providing a significant reduction of friction of both air *and* fluid flow, further reducing the amount of pressure required to transfer a given quantity of liquid. Lower pressures mean lower energy consumed. The operating principles and basic structure of the Wilden® air valve, which have provided the highest level of reliability for over 30 years, remains unchanged. We have simply made the best a little better by re-engineering components unrelated to the critical shifting functions which make the Wilden® valve superior to any other valve system. The ability of the valve to deliver unequalled reliability operating on typically "dirty" plant air, or operating against a stall, or in intermittent service at minimum air supply pressures remains unchanged.

Pre-1985 Wilden® pumps can achieve these energy savings by retrofitting the existing air distribution system with the new design.

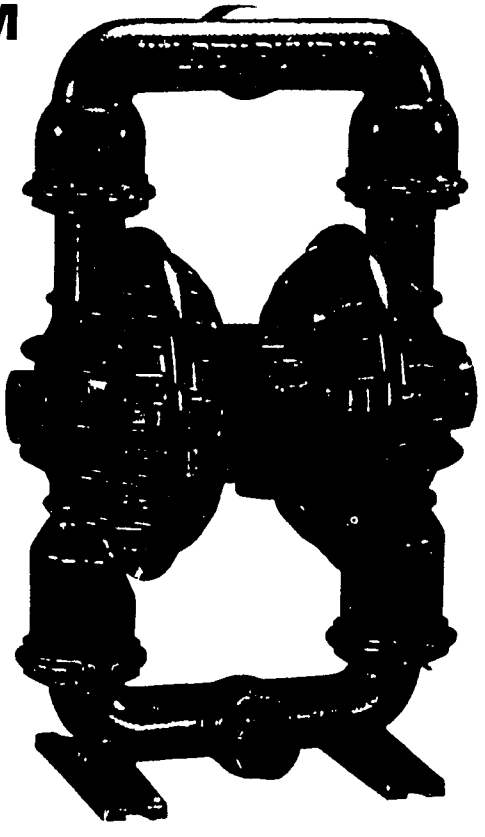

THE WILDEN CHAMP™

Engineered Plastic Air-operated, Double-diaphragm Pumps

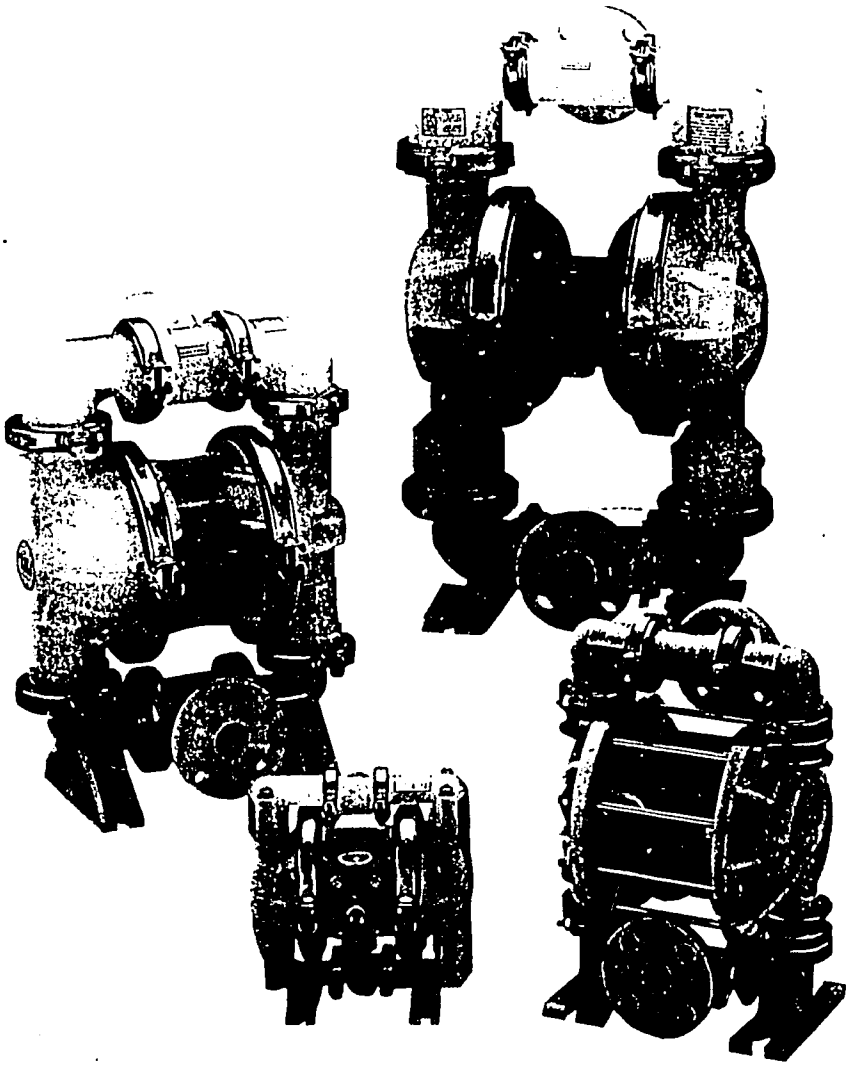

Wilden® proudly presents the Champ™. Available in four sizes for flow rates from 1/10 to 155 gallons per minute. A pump we build with pride to handle the most corrosive chemical process application. Engineered in response to requests for a reliable, non-metallic, sealless, positive displacement pump. The Champ™ adds emphasis to the versatility of the Wilden® air-operated, double-diaphragm pump line.

RELIABILITY, CORROSIVE RESISTANCE AND SAFETY were key words in the Champ™ Research and Development Program.

RELIABILITY was insured by the decision to build the non-metallic, wetted parts around the proven Wilden® air valve system, and to incorporate the time tested Wilden® diaphragms in the Champ™ design.

CORROSIVE RESISTANCE centered on selection of materials. Wilden® engineers spent many months analyzing the broad range of available thermoplastic, thermoset and non-metallic equipment. The evaluation of field experience, as well as discussions with material suppliers and plastic fabricators, led to the selection of PVDF, polypropylene and Teflon® PFA as the most suitable materials to complement the versatile Wilden® pump system.

POLYPROPYLENE has good chemical resistance, moderate heat resistance, and exceptional flex fatigue resistance at a reasonable cost.

PVDF (polyvinylidine fluoride), while higher in cost, offers exceptional chemical resistance, higher temperature resistance, and excellent mechanical properties.

TEFLON® PFA combines the excellent chemical, electrical and thermal properties of Teflon® TFE with enhanced mechanical properties at elevated temperatures. Teflon® PFA is inert to virtually all chemicals and will not leach or absorb materials being pumped.

These materials in combinations with either the patented Wilden® Teflon® diaphragm or any one of five elastomeric materials offer the broadest possible range of compatibility with chemicals and solvents.

SAFETY is evident in the rugged appearance of the Champ™. The massive ribs of the water chambers, the large flanges with sturdy, specially designed stainless steel clamp bands, and thick wall sections are testimony to the efforts of Wilden® engineers.

The model M-1 is the smallest of the Champ™ series. Molded of pure, unfilled polypropylene, PVDF, or Teflon® PFA. It weighs a mere eight pounds and has an output range of 1/10 to 14 GPM.

The M-2 Champ™ is molded of glass filled polypropylene or unfilled PVDF, weighs 21 pounds, and is for intermediate flow ranges of 2 to 37 GPM.

The M-4 Champ™ is molded in unfilled, unpigmented polypropylene, PVDF, or Teflon® PFA with output range up to 74 GPM.

The M-8 Champ™ is molded in unfilled, unpigmented polypropylene or PVDF with output range up to 155 GPM.

CAUTION: Temperature limits are based upon mechanical stress only. Certain chemicals will significantly reduce maximum safe operating temperatures. Consult engineering guides for chemical compatibility and temperature limits. M-2 polypropylene is glass filled and not suitable for handling hydrofluoric acid.

Champ™ is a Trademark of Wilden Pump & Engineering Co.

THE FOODMASTER™

USDA ACCEPTED "SANITARY"

Air-Operated Double Diaphragm Pump

The Wilden® Foodmaster™ is accepted by the USDA as sanitary for meat and poultry. The elastomers are FDA approved materials. The Foodmaster™ is constructed of investment cast, polished, 316 stainless steel for all food contact *and* non-contact parts. In most applications, the Foodmaster™ can be cleaned in place or is easily disassembled by removing simple clamp bands with large wing nut type fasteners. The Foodmaster™ has two-inch tri-clamp designed ports for easy system hookup and removal. The Foodmaster's™ large pumping chambers and positive acting ball valve design insure high vacuum capabilities with clearance for solids up to ¾-inch in diameter. It is built on the same proven Wilden® air-operated, double-diaphragm design which means it has no: gears, seals, rotating or shearing action, and no electrical connections. It is safe in wet areas, has adjustable volume and pressure and is the safest, most gentle pump available to handle solids laden, viscous, and sensitive food products. The Foodmaster™ and the M8 and M15 food processing pumps are available with the unique Wilden® swivel stand as an option. This stand makes it simple to disassemble, clean, drain and reassemble the pump.

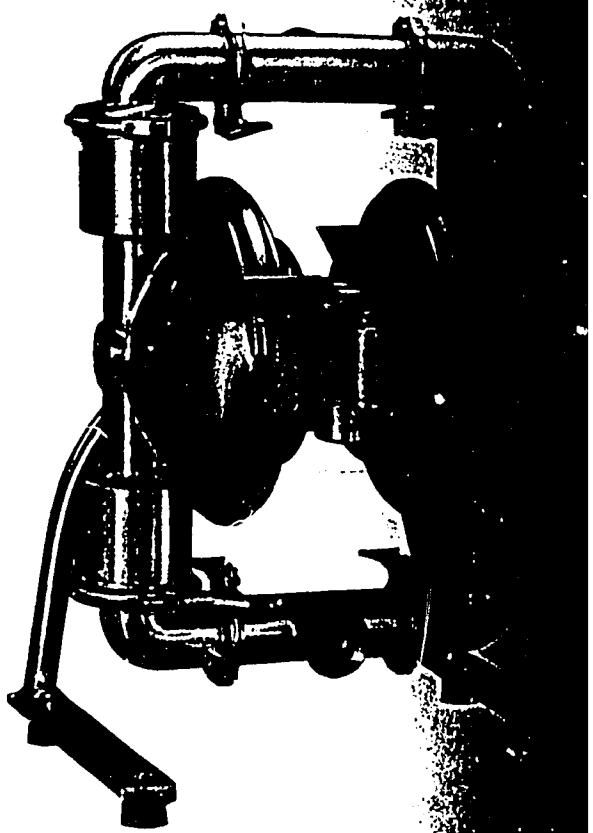

EFFICIENT, DEPENDABLE FOOD PROCESSING

Wilden Pump and Engineering Company's Food Processing Pumps are air-operated, double-diaphragm pumps designed specifically for those applications in the food processing industry which require FDA-accepted materials. All food contact parts are of stainless steel that has been bead blasted for a smooth finish. All non-food parts are electroless nickel-plated, and all seals are FDA-approved Saniflex™ or Teflon®. In addition, the pumps are fitted with tri-clamp type ports for easy hook-up and quick removal and use simple clamp bands with large, wing nut type fasteners for quick and easy disassembly.

These pumps are designed to be used in applications where more expensive USDA-accepted pumps are not required. They are ideal for sauces, purees, jams, tomato paste, and other food products that are thick, abrasive, or have sensitive texture that requires gentle pumping action. The Wilden® line of FOOD PROCESSING PUMPS uses a gentle pushing action. There are no rotors, lobes, or gears to tear or mash delicate foods.

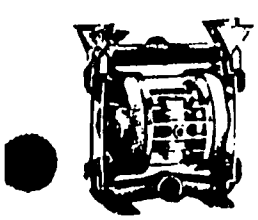

M-2
For Flows to 37 GPM

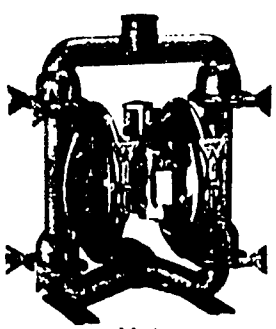

M-4
For Flows to 73 GPM

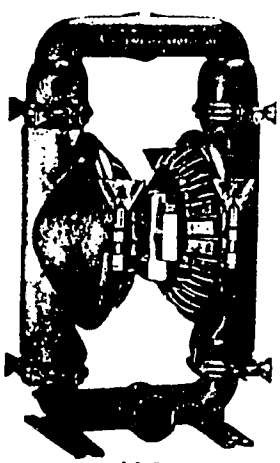

M-8
For Flows to 155 GPM

M-15
For Flows to 230 GPM

Foodmaster™ is a Trademark of Wilden Pump & Engineering

MATERIALS AND FINISHES

Materials of construction for wetted parts are: aluminum, cast iron, 316 stainless steel, Hastelloy C, injection molded polypropylene, PVDF and Teflon® PFA. Non-wetted or air section materials are: aluminum, polypropylene with cast iron or 316 stainless steel available as options in some models. See your Wilden® dealer or consult factory for specific models. Diaphragms, valve balls, and seats are available in: Neoprene, polyurethane, Buna N, Nordel, Viton, Hypalon, Saniflex™ and Teflon® (TFE). All materials not available in all models. All metallic pumps except food models are finished in high quality, hard coat, gloss orange enamel. Food models are unpainted. *All* metallic pumps can be specified non-painted. Models M-4, M-8, and M-15 in aluminum construction can be ordered with an optional strainer to prevent oversize solids from entering the pump's inlet.

WILDEN® RESERVES THE RIGHT TO CHANGE MODELS, SPECIFICATIONS AND PRICES AT ANY TIME WITHOUT PRIOR NOTICE.

SAMPLE TECHNICAL SPECIFICATION

GENERAL DESCRIPTION: The pump shall be compressed air-operated, double-diaphragm design with ball check valves. Held together with clamp bands for added security, easy maintenance, and quick inspection. Pumping action shall be controlled by an externally serviceable air valve with only one moving part. Pump shall have a ____(size)____ suction inlet and a ____(size)____ discharge port. Pump shall be self-priming, capable of high suction lift and able to run dry without damage.

CONSTRUCTION: Wetted parts shall be of ____(material)____. Elastomers shall be of ____(type)____ diaphragms, ____(type)____ valve balls and ____(type)____ valve seats.

CAPACITY: Pump shall be capable of delivering ____(x)____ gallons per minute at ____(x)____ feet of discharge and ____(x)____ feet of suction lift, using ____(x)____ PSI and ____(x)____ SCFM of compressed air. (Refer to table on next page.)

WARRANTY

All pumps manufactured by Wilden Pump and Engineering Company are manufactured to the highest standards of quality and workmanship. Every pump is hydrostatically and functionally tested and guaranteed to operate as designed and meet our published performance curves. Materials and workmanship are guaranteed for one year from start-up or two years from shipment, whichever occurs first. Flow rates were determined by measurement into calibrated tanks and air consumption data was determined by the use of calibrated mass flow meters.

AVAILABILITY

Wilden® pumps are sold through a network of qualified, authorized distributors. Wilden's® distributors maintain a stock of pumps and replacement parts. Generally, customers' requirements can be handled from distributor stock in a matter of days. Factory shipments generally take two to four weeks, depending upon the specific order. Current list prices are published and are available from Wilden's® distributors or by request from the factory.

Wilden® recommends that in order to insure pump integrity, fitability, safety, and performance, only genuine Wilden® replacement parts be used. We cannot guarantee the quality or reliability of after market "will fit" parts.

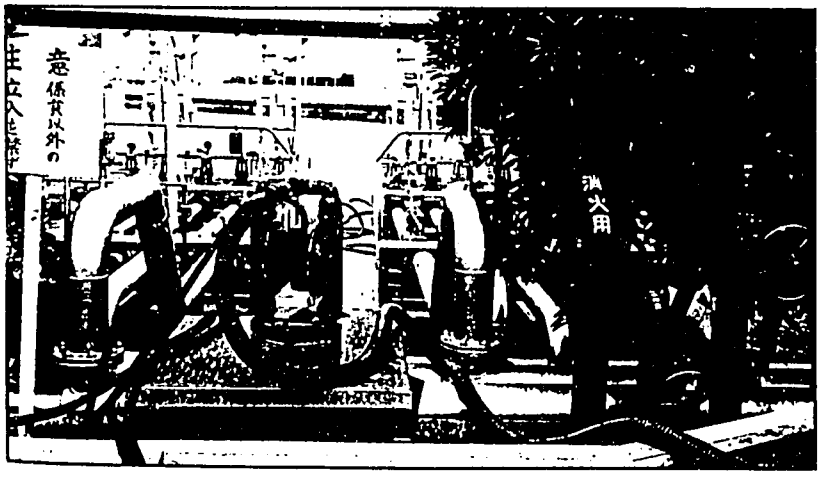

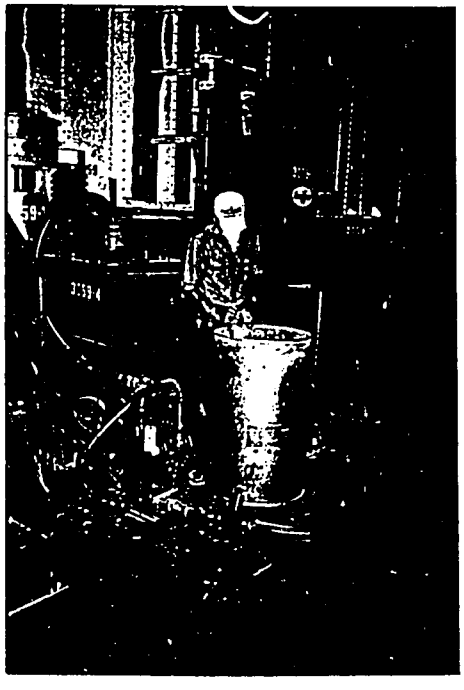

Wilden offers more . . .

More Sizes — Five sizes with flows from 0 to 230 GPM

More Pump Materials — aluminum, cast iron, 316 SS, Hastelloy C, polypropylene, PVDF, Teflon® PFA

More Elastomer Materials — Compatibility with any chemical solution

More Performance — Higher flows

More Value — Lower prices and lower operating costs

M-1 AVAILABLE IN ALUMINUM & STAINLESS STEEL

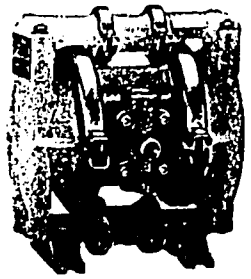

M-1
For Flows to 14 GPM

WILDEN® MODEL M1®

Height ..... 8½"
Width ..... 8"
Depth ..... 6½"
Weight ..... 8 lbs.
Air Inlet ..... ¼" Female N.P.T.
Inlet ..... ½" Female N.P.T.
Outlet ..... ½" Female N.P.T.
Suction Lift POLY { 15' Dry / 25' Wet
TEFLON { 8' – 10' Dry / 25' Primed
Max. Size Solids .. 1/16" Dia.

Example: *To pump 4 gpm against a discharge pressure of 40 psig requires 60 psig and 2 scfm air consumption (See dot on chart)*

Caution: Do not exceed 100 psig air supply pressure.

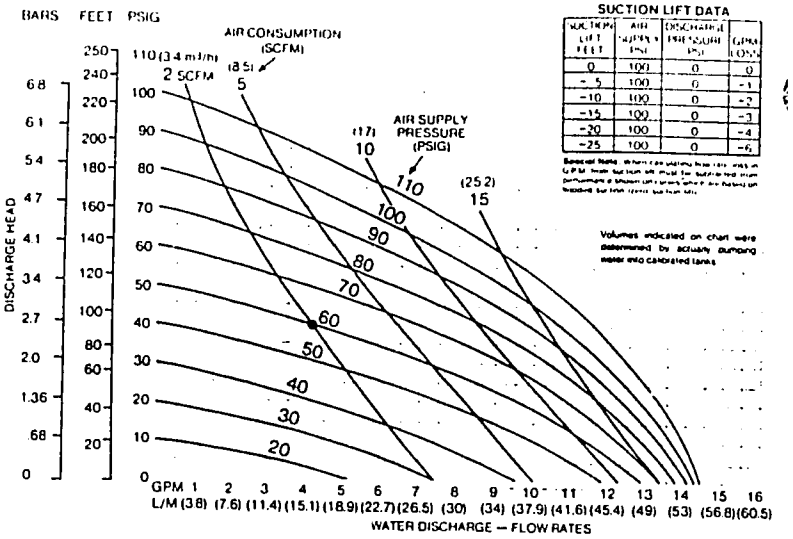

SUCTION LIFT DATA

SUCTION LIFT FEET	AIR SUPPLY PSI	DISCHARGE PRESSURE PSI	GPM LOSS
0	100	0	0
-5	100	0	-1
-10	100	0	-2
-15	100	0	-3
-20	100	0	-4
-25	100	0	-6

Volumes indicated on chart were determined by actually pumping water into calibrated tanks.

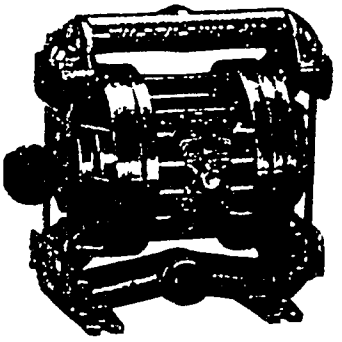

M-2
For Flows to 37 GPM

WILDEN® MODEL M2®

Height ..... 10½"
Width ..... 10½"
Depth ..... 7"
Weight .. ALUMINUM 22 lbs.
STAINLESS/HASTELLOY 35 lbs.
Air Inlet ..... ¼" N.P.T.
Inlet ..... 1" Male N.P.T.
Outlet ..... ¾" Male N.P.T.
Suction Lift ..... 18' Dry / 25' Wet
Max. Size Solids .. ⅛" Dia.

Example: *To pump 10 gpm against a discharge pressure of 35 psig requires 40 psig and 5 scfm air consumption. (See dot on chart.)*

Note: For M2 pumps fitted with Teflon diaphragms reduce water discharge figures by 20%. Suction lift for M2 pumps with Teflon diaphragms 10 ft dry, 25 ft wet.

Caution: Do not exceed 125 psig air supply pressure.

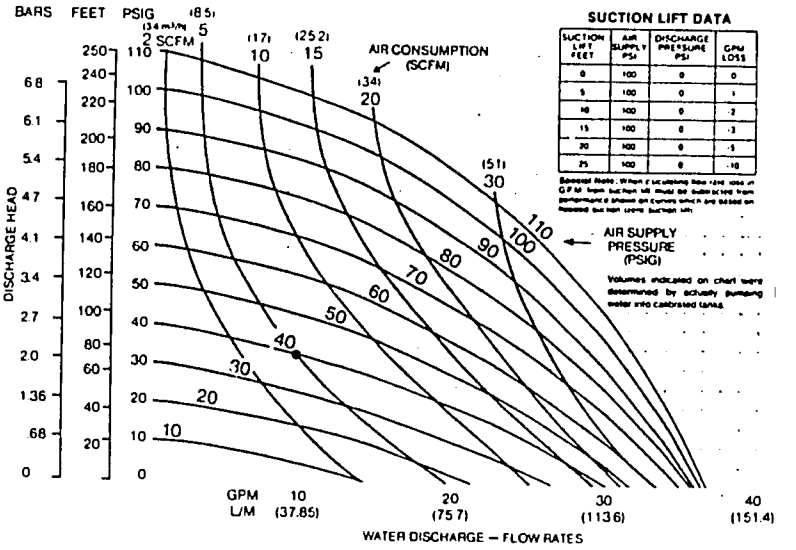

SUCTION LIFT DATA

SUCTION LIFT FEET	AIR SUPPLY PSI	DISCHARGE PRESSURE PSI	GPM LOSS
0	100	0	0
5	100	0	-1
10	100	0	-2
15	100	0	-3
20	100	0	-5
25	100	0	-10

Volumes indicated on chart were determined by actually pumping water into calibrated tanks.

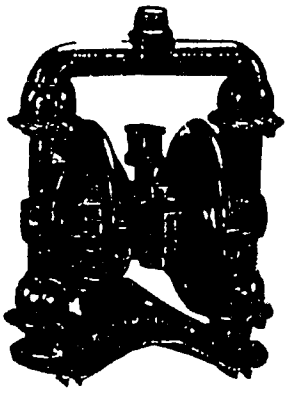

M-4
For Flows to 73 GPM

WILDEN® MODEL M4®

Height ..... 18"
Width ..... 14¼"
Depth ..... 11¾"
Weight ..... ALUMINUM 35 lbs.
IRON OR STAINLESS 52 lbs.
Air Inlet ..... ⅜" N.P.T.
Inlet ..... 1½" Female N.P.T.
Outlet ..... 1¼" Male N.P.T.
Suction Lift ..... 22' Dry / 27' Wet
Max. Size Solids .. 3/16" Dia.

Example: *To pump 22.5 gpm against a discharge pressure head of 45 psig, requires 60 psig and 20 scfm air consumption (See dot on chart.)*

Note: For M4 pumps fitted with Teflon diaphragms reduce water discharge figures by 20%. Suction lift for M4 pumps with Teflon diaphragms 12 ft dry, 25 ft wet.

Caution: Do not exceed 125 psig air supply pressure.

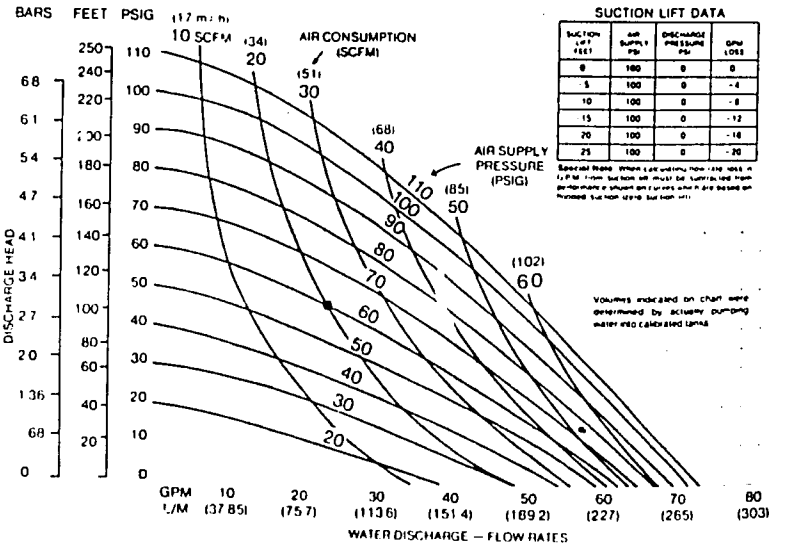

SUCTION LIFT DATA

SUCTION LIFT FEET	AIR SUPPLY PSI	DISCHARGE PRESSURE PSI	GPM LOSS
0	100	0	0
5	100	0	-4
10	100	0	-8
15	100	0	-12
20	100	0	-16
25	100	0	-20

Volumes indicated on chart were determined by actually pumping water into calibrated tanks.

Performance

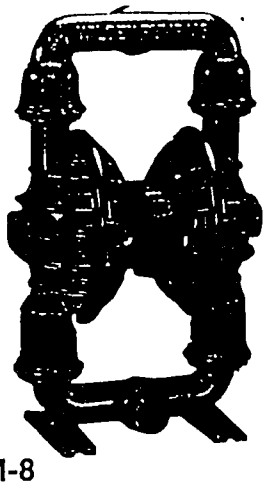

M-8
For Flows to 155 GPM

WILDEN® MODEL M8®

Height ..... 26¼"
Width ..... 15¾"
Depth ..... 13¼"
Weight ... ALUMINUM 65 lbs.
IRON OR STAINLESS 110 lbs.
HASTELLOY 124 lbs.
Air Inlet ..... ½" N.P.T.
Inlet ..... 2" Male N.P.T.
Outlet ..... 2" Male N.P.T.
Suction Lift ..... 20' Dry
25' Wet
Max. Size Solids ... ¼" Dia.

Example: *To pump 47 gpm against a discharge head pressure of 50 psi, requires 60 psig and 40 scfm air consumption. (See dot on chart.)*

Note: For M8 pumps fitted with Teflon diaphragms reduce water discharge figures by 20%. Suction lift for M8 pumps with Teflon diaphragms: 12 ft. dry, 18 ft. wet.

Caution: Do not exceed 125 psig air supply pressure.

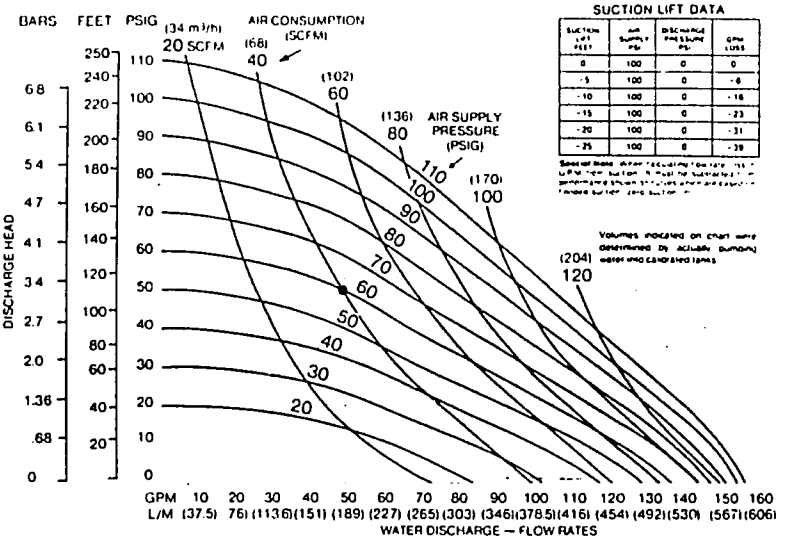

SUCTION LIFT DATA

Suction Lift Feet	Air Supply PSI	Discharge Pressure PSI	GPM Loss
0	100	0	0
-5	100	0	-6
-10	100	0	-16
-15	100	0	-23
-20	100	0	-31
-25	100	0	-39

Volumes indicated on chart were determined by actually pumping water and converted to gpm.

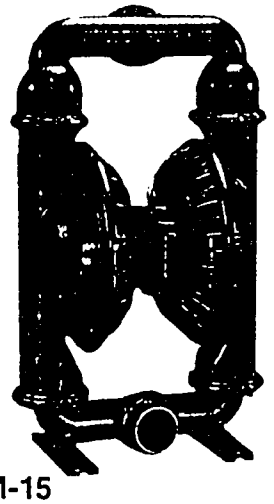

M-15
For Flows to 230 GPM

WILDEN® MODEL M15®

Height ..... 32¾"
Width ..... 20"
Depth ..... 18"
Weight ... ALUMINUM 120 lbs.
IRON OR STAINLESS 195 lbs.
HASTELLOY 216 lbs.
Air Inlet ..... ½" N.P.T.
Inlet ..... 3" Male N.P.T.
Outlet ..... 3" Male N.P.T.
Suction Lift ..... 20' Dry
25' Wet
Max. Size Solids ... ⅜" Dia.

Example: *To pump 90 gpm against a discharge pressure of 55 psig, requires 70 psig and 80 scfm air consumption. (See dot on chart.)*

Note: For M15 pumps fitted with Teflon diaphragms reduce water discharge figures by 20%. Suction lift for M15 pumps with Teflon® diaphragms: 12 ft. dry, 18 ft. wet.

Caution: Do not exceed 125 psig air supply pressure.

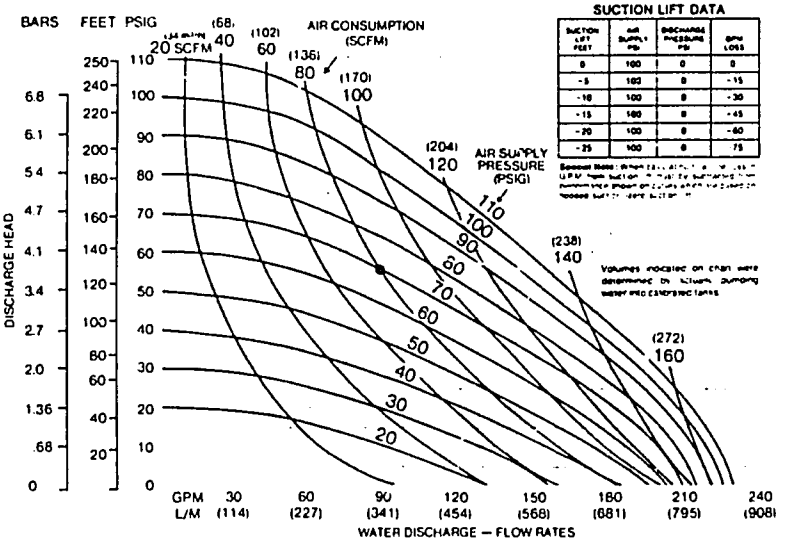

SUCTION LIFT DATA

Suction Lift Feet	Air Supply PSI	Discharge Pressure PSI	GPM Loss
0	100	0	0
-5	100	0	-15
-10	100	0	-30
-15	100	0	-45
-20	100	0	-60
-25	100	0	75

Volumes indicated on chart were determined by actually pumping water and converted to gpm.

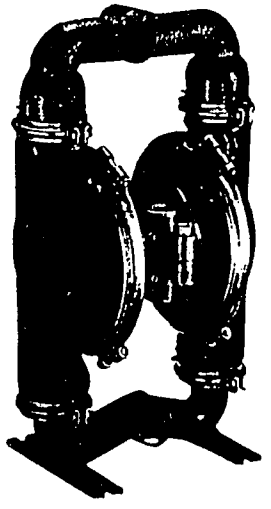

M-8 HIGH PRESSURE

Wilden's® new high-pressure air-operated, double-diaphragm pump is designed for discharge pressures of up to 300 PSI. Built tough with heavy duty three-piece stainless steel bands, stainless steel wetted section, stainless steel center section and a high pressure brass air valve.

The high-pressure unit is a one-to-one ratio pump. Where high discharge pressure is needed, but sufficient air pressure is not available, an economical air pressure amplifier is available. Please consult factory.

WILDEN AIR-OPERATED DOUBLE-DIAPHRAGM PROCESS PUMPS

Some of the Thousands of Applications

PAINT MANUFACTURING PLANTS — Pumping paint, resins and pigments.

FOOD PROCESSING INDUSTRY — Pumping peanut butter, pickle relish, tomato paste, dog food, jam, apple sauce, chocolate and all types of processed meat and poultry products.

WASTE TREATMENT — Sludge from clarifiers, filter press feed, chemical neutralization pumping.

CIRCUITS MANUFACTURING — Etching solutions, deionized water, waste treatment, ultrapure acids.

REFINERIES & CHEMICAL PROCESSING — All kinds of abrasive and corrosive chemical and petroleum slurries. Oil skimming and general tank cleaning.

ADHESIVES & GLUES — All kinds.

SHIPS & MARINE — Barge and tanker stripping of tanks and bilges.

CERAMIC PLANTS — All tile, brick, pottery, china and ceramic slips.

CARPET & TEXTILE PLANTS — Carpet backing and sizing compound.

SEWAGE SLUDGE — All kinds of sludges in waste treatment plants.

CONSTRUCTION & MINING — Dewatering of mine water, excavations, tunnels, ore processing, mine tailings, cement grout and plaster.

DRY POWDER TRANSFER — Wilden Pumps are used to pump low density powders in many industries. Materials pumped include: Carbon black, fumed silica, expanded mica and talc.

RUBBER INDUSTRY — All kinds of latex.

BREWING PLANTS — Hops and yeast slurries.

WELL DRILLING — Perfect for water well drillers to pump the "mud" and grout after the well is drilled.

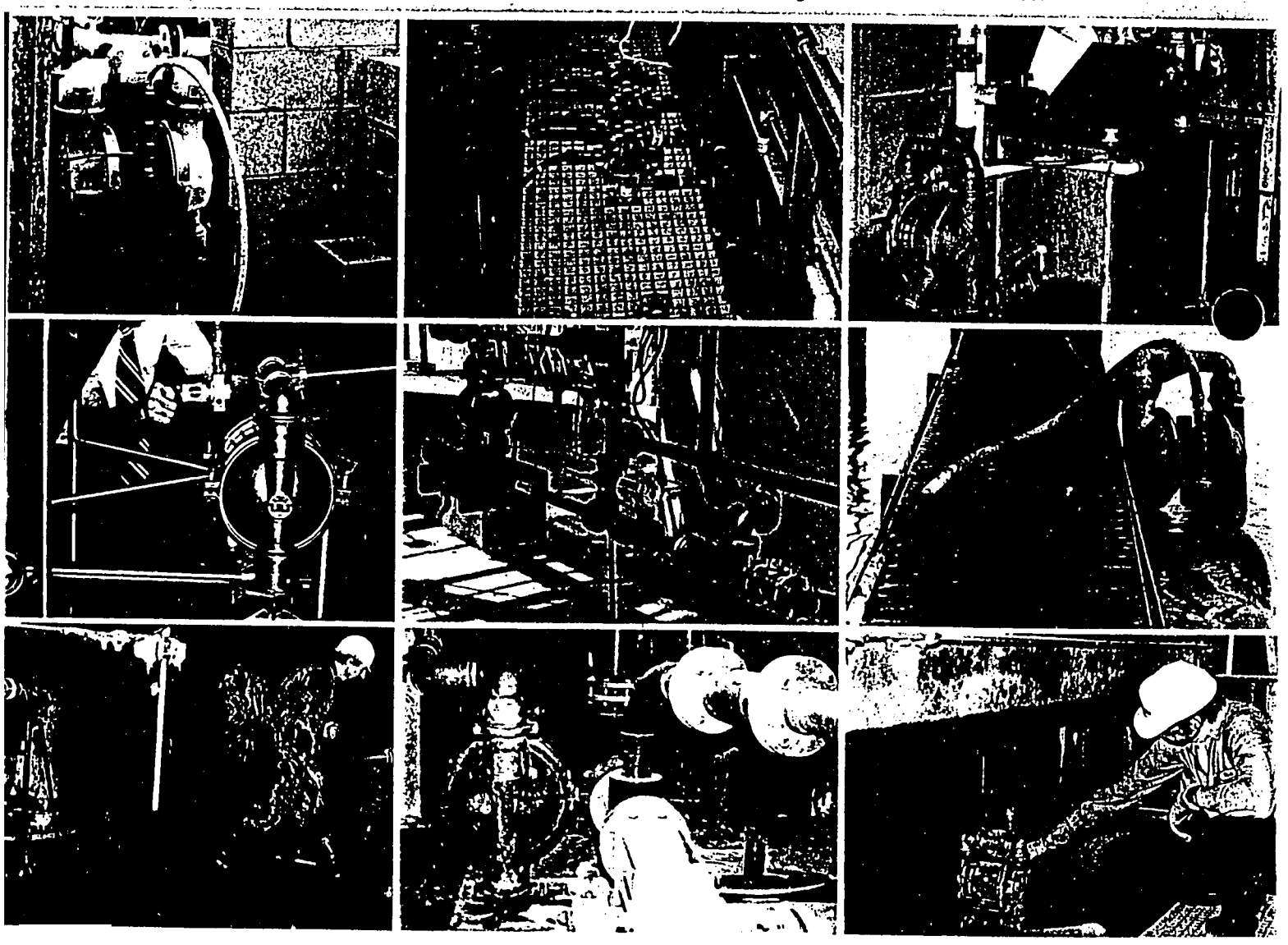

Your local Wilden distributor is:

WILDEN PUMP & ENGINEERING CO.

22069 Van Buren Street / Colton, CA 92324

Phone: 714/422-1730

Telex: 676-452 FAX: 714/783-3440

214