PD-ABK-105

WORLD ENVIRONMENT CENTER

WASTE MINIMIZATION IMPACT PROJECT
POLISH CHEMICAL INDUSTRIAL SECTOR

PLANT VISIT REPORT NO. 2

November 1 - 12, 1994

World Environment Center
419 Park Avenue South, 18th floor
New York, N.Y. 10016

December 1994

DISTRIBUTION

Donald Pressley,	Representative, United States Agency for International Development, Warsaw, Poland
Michael Kalinoski,	Senior Environmental Specialist, Bureau for Europe and New Independent States, United States Agency for International Development, Washington, D.C.
Patricia A. Swahn,	Acquisitions Manager, Document Acquisitions, United States Agency for International Development, Washington, D.C.

Antony G. Marcil, WEC, New York
George Carter, WEC, New York
Thomas J. McGrath, WEC, New York
Romuald Michalek, WEC, New York
Thomas Pluta, WEC, New York
George Laszkiewicz, WEC, New York
Henryk Sojka, WEC Coordinator, Katowice, Poland
Plant Directors (individual plant reports only)
(2) Files

DISCLAIMER

The opinions expressed herein are the professional opinions of the authors and do not represent the official position of the Government of the United States or the World Environment Center. This report contains confidential information regarding industrial enterprises and therefore is not for distribution without written approval from the U.S. Agency for International Development, Washington, D.C. or the World Environment Center, New York.

TABLE OF CONTENTS

	Page
Introduction	5
Exectuive Summary	6
Findings and Recommendations	8
Company Reports with Appendices	
A. Zaklady Chemiczne "Organika Azot" **(Azot)**	14
B. Zaklady Chemiczne "Blachownia" **(Blachownia)**	30
C. Krakowskie Zaklady Przemyslu Nieorganicznego "Bonarka" **(Bonarka)**	58
D. Zaklady Przemyslu Barwinikow "Boruta" S.A. **(Boruta)**	66
E. Zaklady Chemiczne Tworzyw Sztucznych Boryszew S.A. **(Boryszew)**	79
F. Zaklady Azotowe "Kedzierzyn" S.A. **(Kedzierzyn)**	92
G. Torunskie Zaklady Przemyslu Nieorganiczwego "Polchem" **(Polchem)**	99
H. Polfa Tarchomin S.A. **(Polfa)**	108
I. Zaklady Chemiczne "Viscoplast" S.A. **(Viscoplast)**	114
J. Report Format	
K. Rroject List	

INTRODUCTION

BACKGROUND AND PURPOSE OF TRIP

In June 1994, the World Environment Center, under agreement with USAID, visited nine plants in the chemical sector industry in Poland to facilitate development of a waste minimization program in each of the plants. Based on this visit and technical services provided, each of the plants developed a plan for implementing waste minimization projects. A second visit was conducted from November 1 to 12, 1994. The purpose of this second visit was to review progress made in each of the plants, evaluate the projects identified, and offer recommendations for further development of the waste minimization programs. The findings from this second visit are presented in this report.

ASSESSMENT TEAMS AND COMPANIES VISITED

TEAM 1

Thomas A. Pluta, Program Manager, World Environment Center
Dr. Mohan Vadekar, Volunteer Expert, Exxon Chemical (retired)
Saul Elishewitz, Volunteer Expert, Allied Signal (retired)

Companies Visited:

Viscoplast, Wroclaw
Kedzierzyn Nitrogen Works, Kedzierzyn-Kozle
Blachownia Chemical Works, Kedzierzyn-Kozle
Organika-Azot, Jaworzno

TEAM 2

Dr. George Laszkiewicz, Project Manager, World Environment Center
Dr. Avijit Dasgupta, Consultant, Envirocon International
Dr. Raymond Feder, Volunteer Expert, Allied Signal (retired)

Companies Visited:

Bonarka, Krakow
Polfa, Warsaw
Polchem, Torun
Boruta, Zgierz
Boryszew, Sochaczew

The report was prepared by Avijit Dasgupta Ph.D. of Envirocon International.

EXECUTIVE SUMMARY

This report presents the findings and recommendations from the second follow up visit by two teams of World Environment Center (WEC) consultants and volunteer experts in connection with the WEC Waste Minimization Impact Program (WMIP) in Poland. The report focuses on the chemical sector industries in Poland. The visits took place from November 1-12, 1994.

In June 1994, the WEC team of consultants and volunteer experts began the WMIP and visited nine chemical plants. The purpose of that visit was to assist the plants in organizing a waste minimization program, facilitate the identification of projects, and offer recommendations and guidelines to develop a plant specific waste minimization program.

During this second follow up visit, the objectives were to review progress made in the nine plants relative to identification and development of waste minimization projects, to evaluate the projects proposed or being implemented, and to offer recommendations to facilitate establishment of a long-term waste minimization program in the plants. The WEC team also reviewed equipment requests (under $10,000) submitted by the plants as part of the WMIP. For those plants which have not submitted equipment requests, WEC discussed their equipment needs and offered suggestions.

In general all plants visited have made significant progress in identifying waste minimization projects. In most plants, some projects have been completed. Several projects are in progress in all plants. Plant personnel demonstrated a high level of motivation and technical competency in implementing waste minimization projects. Waste Minimization Committees are active in all plants and continued to improve both their organization and implementation skills. A good general understanding of the benefits of establishing a waste minimization program exists in the plants.

A general observation was that significant efforts were being made to identify and to quickly implement numerous waste minimization projects. Quick and steady progress is important in demonstrating success of the waste minimization program and motivating plant personnel to participate in the program. Most of these projects are relatively small but demonstrated good economic and environmental benefits. Several plants have also implemented employee incentive programs to raise awareness and generate waste minimization suggestions.

While good progress is being made in implementing the projects, more emphasis is needed in systematically evaluating the benefits of the projects. This, in part, may be due to consideration of a limited number of factors in the economic evaluation and in the methodology used to calculate the benefits. Use of the Net Present Value (NPV) calculation would provide additional basis for evaluating the financial benefits of projects.

There appeared to be a lack of a clear understanding of how individual projects contribute to meeting the company's overall waste minimization goals and objectives. In some of the plants, clear goals and objectives still need to be established, as well as a strategy to expand the waste minimization program to the entire plant.

Good project documentation would provide management with reliable information to make prudent and well informed decisions in selecting projects with the best return on investment and protective of the environment. It is recommended that the standard format and guidelines for project evaluation provided in the training manual (Ocena Mozliwosci Minimalizacji Odpadow) be followed more closely to obtain a realistic and comprehensive result of project benefits.

Finally, expanded use of available resources, especially consultants, equipment suppliers, and other WMIP participating companies would enhance the implementation of the program.
In summary, almost all plants are well positioned and making good progress in implementing waste minimization projects. Added emphasis on programmatic goals and objectives and more comprehensive evaluation of project benefits would significantly contribute to the establishment of successful long-term waste minimization programs in the plants.

FINDINGS AND RECOMMENDATIONS

POLICIES AND GOALS

Waste minimization policies and goals set the framework within which a comprehensive long term program can be developed and carried out. They are an indication of the commitment of management support. In most cases, waste minimization projects are actively being implemented and good progress has been achieved. In some plants a waste minimization policy and goals and objectives have not yet been established limiting the awareness of employees regarding the purpose and direction of the waste minimization program and slowing expansion of the program throughout the plant.

Finding: Waste minimization projects are being implemented, but in some cases without a clear understanding of how and to what extent the projects contribute to meeting the company's waste minimization goals and objectives.

Recommendations:

- In order to establish and expand the waste minimization program throughout the plant a waste minimization policy should be prepared and widely publicized. Where waste minimization policies have been prepared, they should be periodically reviewed and amended to reflect any changes.

- Establish and publicize clearly defined goals and objectives; and regularly review and amend them to reflect changing priorities and accomplishments.

WASTE MINIMIZATION COMMITTEES

In general, good progress has been achieved in implementing waste minimization projects. As the waste minimization program develops it is necessary to have a well thought out plan to maintain interest and to expand the program in the plant. The role of the WMCs should be as a "steward" to lead, organize and oversee the program.

Finding 1: Based on recommendations from the prior plant visits, all companies have taken action to broaden the composition of the Waste Minimization Committees (WMCs). The WMCs have also included staff representing maintenance, finance, and safety departments.

Recommendation: WMC members should be actively involved in evaluating and comparing all waste minimization projects from their particular areas of expertise and responsibility to ensure that all waste minimization projects receive a comprehensive review.

Finding 2: In some plants, senior management involvement and active role in the program could be improved. Total worker participation and a team approach in working with WMC is critical to maintain the momentum that has been established in the waste minimization projects and achieve long term success of a company-wide waste minimization program.

Recommendation: More active participation of senior management in the waste minimization program is recommended by more regular meetings with the WMC or reports on progress toward meeting established objectives.

Finding 3: While many waste minimization projects have been identified and are being implemented, most projects are not yet selected based on their contribution to reaching waste minimization goals. While most WMCs were actively involved in identifying projects, there is still a need to monitor the progress to meet goals.

Recommendations:

- It is important for the WMC to develop a set of clearly defined goals, objectives and schedules. Projects should be tracked using project logs. Waste minimization projects should be selected and prioritized to achieve overall program objectives of the company.

- WMC should establish both short term and long term "milestones" to monitor the progress of the waste minimization projects. Measurable performance parameters should be used to regularly evaluate progress of projects. Some examples of measurable parameters are: (1) lowering of cost of production in $ per ton of product due to waste minimization, (2) lowering of energy consumption in KWH per ton of product due to waste minimization, and (3) lowering of cost of waste discharge and disposal per ton of product due to waste minimization.

Finding 4: Currently, projects appear to be selected for their ease of implementation and low cost. This is a good initial approach to raise employee awareness and to quickly demonstrate success of the waste minimization program. However, limited resources will require that projects be compared to select the ones with best economic and environmental return. Good technical, economic and environmental feasibility analysis and comparisons will become increasingly important as low cost, no cost projects are completed. In the future, projects with higher capital cost will need to be more carefully compared in order to select the projects with the best return on investment.

Recommendation: Establish procedures and forms to review and compare future waste minimization projects using information in the manual (Ocena Mozliwosci Minimalizacji Odpadow) as a guide.

Finding 5: In a number of cases, there did not appear to be a high level of awareness or active

shop floor worker involvement in the waste minimization program. All employees need to clearly understand why and how the waste minimization program is being implemented, how they can participate, and how they benefit.

Recommendations:

- WMC should prepare and distribute regular progress reports through appropriate means (newsletters, posters, meetings) to all employees.

- Prepare and distribute forms for waste minimization project suggestions. Include information on any incentives and rewards for projects which are selected. Where possible, some immediate award should be made.

Finding 6: Project documentation measures need to be improved. Additional emphasis must be given to documenting and reporting the results and how specific waste minimization projects contribute to meeting the company's waste minimization policies and goals.

Recommendation: In order to accomplish this objective, WMC should establish standard procedures and forms to describe waste minimization projects (Appendix J).

HEALTH AND SAFETY

Health and safety is a critical element of the waste minimization program since it demonstrates management commitment, the need for attention to detail, and like waste minimization, it must be practiced each day by every employee. A comprehensive health and safety program is another demonstration that preventing problems is cheaper than correcting them.

Finding: In some plants, management does not stress or enforce good personal health and safety practices based on observations made during the visit.

Recommendations:

- A stronger management commitment to worker health and safety needs to be demonstrated by management staff following health and safety practices required of employees, e.g. using hard hats, safety goggles.

- Increase worker awareness of good health and safety practices including a more extensive and regular training program for all workers; installing posters and signs emphasizing good health and safety practices throughout the plant; recognize and reward and publicize good health and safety performance, e.g. number of accident free days; increase supervisor accountability for worker performance.

WASTE MINIMIZATION PROJECTS

More than 75 waste minimization projects have been identified, completed or are in progress among the nine participating plants. Estimated savings from waste minimization projects (implemented and in progress) are over $1,000,000 based on plant investments of $400,000. They include operational, equipment and process changes, as well as chemical substitutions. The number and scope of these projects, from simple to complex, are good indicators of the degree to which the companies are integrating waste minimization as a regular practice. Several companies indicated their objective in not comparing project alternatives at this time was to quickly demonstrate to employees that waste minimization is possible. Considerable effort and money may be expended in implementing numerous small projects that may not provide a substantial benefit. Therefore, more attention must be directed in four important areas: (1) evaluation of projects, (2) comparison and selection of waste minimization projects; (3) proper documentation of project results and (4) tracking of projects with regard to meeting waste minimization goals and objectives.

Project evaluations using a systematic method which meets company needs will provide realistic and comprehensive information on the economic and environmental benefit of a waste minimization project. Management and the WMCs can then make prudent and well informed decisions for selecting and prioritizing projects that have the best return on investment and are protective of the environment.

Finding 1: Projects selected for implementation are not being evaluated and compared to determine which project offers the greatest economic and/or environmental return.

Recommendation: Establish a review procedure which ensures that all projects are evaluated for technical, environmental and economic feasibility (See Ocena mozliwosci minimalizacji odpadow, Rodzial IV, pages 25-30 and Annex J). The forms should be used as a guide and modified to meet local needs. Projects should be compared to evaluate their relative success and benefits in order to appropriately set project priorities in the future.

Finding 2: Cost accounting procedures which assign waste disposal charges to the generating source are not yet in place in most companies. Two plants, Viscoplast and Boruta, are currently establishing such practices. Much cost data is available and can be used to compare one project to another. However, there appears to be some reluctance to use estimates where actual information is not available.

Recommendations:

- Establish regular procedures and forms to ensure that all projects are equally compared, considering capital, operation and maintenance costs. Comparisons based on estimates can provide a measure of assurance if all appropriate cost factors are considered.

Only those projects that are consistent with the company's policies and goals should be pursued.

- Set up an accounting system to allocate costs to generating sources.

Finding 3: Inflation and variable loan conditions introduce an element of uncertainty in evaluating the economic benefits of alternative projects.

Recommendation: Use of the Net Present Value (NPV) computation should be considered as another method of comparing economic benefits. The financial calculator provided to each company makes use of the NPV method fast and easy.

Finding 4: Waste minimization project documentation procedures and record keeping systems are not well developed. This limits the sharing of information among involved persons thus losing the benefit of different viewpoints, additional information, other alternatives and possibilities and more comprehensive reviews. Good information, organized and accessible to many persons, is also valuable in raising awareness about the successes of the waste minimization program.

Recommendation: Prepare waste minimization company and project description reports for each project using the formats provided by WEC (Appendix J). These should be modified to meet company needs.

Finding 5: A clear understanding is missing of how to organize, measure and report the benefits of these individual projects toward meeting company waste minimization policy, goals and objectives. Where specific objectives have not yet been established, the potential to maintain momentum and expand the program will be limited.

Recommendation: Establish a project tracking procedure. Projects should be tracked by the Waste Minimization Committee from beginning to end, with the results compared to the specific waste minimization objectives of the company.

RESOURCE UTILIZATION

Several types of resources are available in Poland which can be better used to carry out the waste minimization program. These include WEC sponsored local consultants, equipment suppliers, professional associations, waste exchanges and the Pollution Prevention Centers.

Finding 1 : Except for a few plants, local consultants are not sufficiently being involved in developing and evaluating waste minimization projects. Some reasons for the reduced use of consultants may be related to concerns about confidentiality of information and limited experience in defining and managing consultant responsibilities. Consultants can provide the

industries with information from a wide variety of technical literature data base sources and equipment suppliers, and their experience with other plants.

Recommendation: Develop specific project assignments for the consultant with specific expectations and time schedules. If needed, confidentiality agreements should be included. These could include obtaining information on process technologies and equipment; preparing test protocols, conducting sampling programs, and preparing project descriptions of completed projects.

Finding 2: Industry personnel do not appear to have extensive professional development opportunities due to limited resources.

Recommendations:

- Informal seminars on waste minimization could be organized among participating companies to share their experiences. Companies should budget sufficient funds for employees to attend conferences and meetings. Persons who attend the seminars and conferences should be responsible for presenting short seminars for other company personnel about the experience gained at the meetings.

- Participating companies should contact the WEC Pollution Prevention Centers (PPC) at the Technical University of Lodz and at Atmotherm in Opole. The purpose of the PPCs is to offer a wide variety of technical support services to facilitate the implementation of waste minimization programs in Polish industries. This will include technical literature on pollution prevention, catalogs of equipment suppliers, computerized literature search facilities, list of consultants and expertise and services available, selected pollution monitoring equipment, and training services. Participating companies can provide valuable experience in helping the PPCs identify the needs of industries and in developing the centers as focal points of professional activities in the area of pollution prevention and waste minimization in Poland.

Finding 3: There are a number of companies which generate wastes which may be used as raw material for other companies. The possibilities for such "waste exchanges" are not adequately being considered by the plants. One example under consideration is the use of calcium fluoride wastes from fertilizer plants in steel mills or using waste pickling acidic liquor from steel mills as a neutralization chemical in tanneries. Currently at least two plants in Poland are using this kind of waste exchange program.

Recommendation: Industries should consider opportunities for a waste exchange to identify other plants which may be interested in using selected wastes as raw materials. Thus costs of waste disposal and discharge fees are minimized or eliminated, and adverse environmental effects are minimized or avoided. This alternative will require determinations of economic benefits, waste and raw material compatibility.

COMPANY SPECIFIC REPORTS

COMPANY NAME: Azot
LOCATION: Jaworzno, Poland
DATE OF VISIT: November 4, 1994

MEETING ATTENDEES

Stanislaw Zietek	Managing Director
Stanislaw Herman	Production Director
Jan Pierog	Head, Environmental Department
Danuta Pikula	Chief of Technology
Elzbieta Maturszewska	Research & Development Laboratory
Ryszard Kotulski	Chief, Energy Department
Krystyna Karcz	Environmental Specialist
Maria Taborski	Technologist, Environmental Protection
Jan Pluta	Chief, Investment & Maintenance
Lucyma Rozmiarek	Economist
Marian Pabiczuczyk	Technical Director
Zygmunt Kasprowicz	Consultant, Prosynchem
Danuta Barglik	Consultant, Prosynchem
Henry Sojka	WEC Coordinator
Romuald Michalek	WEC Vice President

OVERVIEW

Azot has completed two of 15 waste minimization projects. Estimated savings from the two completed projects is approximately $25,000 based on investments of $2000 for a payback period of about one month. These are the first projects for which an incentive was awarded. The recipient will receive 5% of the savings achieved. This can be an immediate, partial and/or full payment at the discretion of the General Director. The Waste Minimization Committee was expanded to include a maintenance representative. While the progress was characterized as slow by a plant representative, it appears that the definition of success and progress is still related to the size of a project and savings.

Concerns about releasing unsubstantiated data coupled with resistance to using estimates works against the value of publicizing success to raise awareness, even within the company. Nonetheless, the company is approaching the waste minimization in an orderly and systematic way. It would benefit from beginning to link and publicize specific project results to established waste minimization goals. These goals need to be refined since they are presented as a range of values due to differences of opinion among WMC members. One especially notable public information activity was a seminar organized by Azot for other local industries and local officials including environmental agency representatives.

PROJECT STATUS

Azot has identified 15 waste minimization projects and will submit a project status summary report to WEC. The two completed projects are fully described in Appendix B.

Project # 1 - Recycling of Rinse Waters in DCAP Production
This project increased product yield, reduced raw material usage and reduced wastewater treatment costs by $12,983 on an investment of approximately $1,100.

Project #2 - Recirculation of Distillation Residues from DCAP Production
This project reduced raw material and energy costs by $11,885 on an investment of approximately $1,000. Additional suggestions for possible waste minimization opportunities are:

1. Additional product recovery through the use of nitrogen in the thin film evaporator to enhance vaporization of DCAP from the distillation residues.

2. Minimize product loss of DCB by using an inert solvent to minimize the chlorination potential of DCAP in the thin film evaporator.

3. Increase the use of recycled water from the wastewater treatment plant instead of more expensive mine water by use of spray nozzles to cool incoming wastewater.
   A list of proposed projects will be sent to WEC.

EQUIPMENT REQUEST

Several equipment alternatives were identified:

1. Chemical Oxygen Demand (COD) analyzer to evaluate waste stream discharges and use the information to optimize process operating parameters.

2. Contactless liquid flowmeter to measure water and other liquid flows and identify water conservation and raw materials savings opportunities.

3. Process simulation software to better evaluate process designs and operating conditions. Azot estimates that on average, a 10% improvement in yield can be achieved through better estimation techniques.

RECOMMENDATIONS

1. Prepare and distribute more specific goals and objectives of the waste minimization program to continue program momentum established through short term projects.

2. More emphasis should be given to quantify how waste minimization project results are

meeting the company's overall waste minimization goals.

3. Use of estimated data to quantify project results and performance should be encouraged and not only limited to use of fully substantiated data.

4. More emphasis should be given to publicize the results of waste minimization projects.

ACTION ITEMS

A. AZOT

1. Prepare project descriptions of completed and future projects in English using WEC provided guide.

2. Complete equipment justification(s) for equipment to be purchased by WEC.

3. Submit current and proposed project status list to WEC .

4. Submit complete analysis of $AlCl_3$ wastewater stream to WEC (pH, residual organics and inorganics, water content, volume, physical state, etc.) for possible waste exchange use.

5. Identify other possible flocculent users for possible "waste exchange".

6. Contact Institute Francais du Petrol regarding updates on Friedel Kraft synthesis.

B. WEC

1. Fax COD and flowmeter specifications.

2. Obtain information on possible waste exchange opportunities in Poland.

3. Send a list of aluminum catalyst manufacturers to Azot.

4. Contact aluminum waste generators regarding alternative uses.

APPENDIX A

ZAKŁADY CHEMICZNE »ORGANIKA - AZOT«

32-510 JAWORZNO
ul. Szopena 04

World Environment Center
419 Park Avenue South
Suite 1800
NEW YORK , NY 10016
USA
Tel/212/683-4700 Fax:/212/683-5053

Wasz znak: z dnia n/znak: Jaworzno, dnia

DOTYCZY: Final raport concerning realization of Waste Minimization Program.

With reference to our talks on 14 of November we send the final report concerning realization of waste minimization program implemented with cooperation with WEC-New Jork.

I These environmental project have been implemented and realized:

1. Industrial water recirculation project.
2. Aluminium waste reduction - school project.
3. Project of partial recirculation of wastes containing DCAP from after distillation.

II The advance of other projects:

1. Reduction of raw material consumption - the project is being implemented. This is a no cost project. The effects will be estimated after the annual balance is calculated.
2. Reduction of steam consumption - the project is being implemented. By the end of 1995 the project will be entirely realized. Meanwhile the change over from steam geating to water heating is being tested. The effects calculation will be possible after the project is realized.
3. Reduction of water consumption - the industrial water recirculation project has been implemented as a part of this task.
4. Reduction of quantity and harmfulness of solid wastes, water wastes and off-gases - the project is being

-/-

1994 DEC 21 AM 9:02

Adres telegraficzny: 0.112621 Azot
Telefony: Jaworzno 611-12
Bank Śląski z siedzibą w Katowicach Oddział Jaworzno Rach. Nr 312605-26
Biuro czynne w soboty 7-13 w inne dni robocze 7-15

Predryn 35-4 202-90 7000

implemented. The effects will be estemated after the annual balance is calculated.

5. Reduction of quantity and harmfulness of aluminium wastes from the chlorfenvinfos installation - project has been realized.

6. Reduction of wastes from distillation during the chlorfenvinfos process - project has been realized.

7. Reduction of raw material consumption for liquid product - processes - same as item no. 1

8. Reduction of quantity of wastes arising during cleaning process of liquid products - same as item no. 1.

9. Reduction propellant losses in aerosol filling process - the project has been cancelled after analysis of filling machine construction was done.

10. Reduction of quantity and harmfulness of liquid wastes arising in production of Miedzian -

11. Reduction of steam consumption in production process of Miedzian - two subjects are being examined by Research Institute that is why they havebeen excluded from the Waste Minimization Program.

12. Reduction of wastes arising during the cleaning process of installations for production of suspended powders - the project is being implemented . The effects will be estimated after the annual balance is calculated.

13. Reduction of wastes from pachages of row materials - partially implemented. Only big pachages are used for Chlordazon from Slovak Republic. The effects will be estimated after annual balance is calculated.

14. Reduction of organic eft-gases arising during painting process of aerosol containers - the project has been cancelled.

15. Reduction of PE wastes during the production of containers - - because the production of bottles intended for Enolofos has decreased /only for these bottles pure PE is required/ the problem has disappeared. For other containers recycling is practised ofter milling them.

As it arises from the above statement , the subjects 1-4 are long - term subjects which will be realized after the formal cooperation with WEC is completed.
On the contrary, other projects have to be postponed due to difficulties arised / to the time when Research Institute finishes work/.
Moriver we resigned from the implementing projects nos : 9,14 and 15.
After the annual balance is calculated and the effects are estimated Waste Minimization Committee will send the additional informations by the end of January 1995 .
We think that our company is able to act as a mentor for other companies to share our experience and assist in formulating waste minimization projects.

ZARZĄDU
dla Techniczych
Jan Pabiańczyk

WEC - Poland Waste Minimization Project Company Description
Please Complete for Each Company

Company Name: "Organika-Azot SA." - Jaworzno

Date completed: 09.12.94

Company Representative and Title: Mr S.Ziętek ,General Manager

In what year was the company founded? 1917

What product(s) does the company produce?

Pesticides and semiproducts for others plants.

Does the company export products outside Poland?
(If yes, please list the top three export nations)

Yes, Holland

How many employees does the company have?

800

What are the company's annual earnings (in dollars)?

about 10 000 000 USD

In what year did the company first have an environmental division or employees working on environmental affairs?

from 1965

Does the company have a separate environmental division, or are employees at all levels of staff and management involved in environmental affairs for their divisions?

Yes,

Please describe the kinds of environmental training given to employees not directly involved in environmental affairs.

In time of Safety training some people have given information of enviromental affairs.

Please give a brief history of environmental activities at the company, including any waste minimization projects completed prior to WEC projects (use additional pages if necessary)

a) factory start up the water treatment plant in 1990,

b) "Azot" build the waste disposal plant near the factory,

c) "Azot" continued work with the plant incinirator system,

d) from 1993 "Azot" cooperated with WEC and finished three waste minimization projects:

- reduction of waste-waters from hydrolysis and washing of aluminum complex DCAP
- partial redistillation of organic wastes arising in the purification process of raw DCAP
- industrial water recycling

Project Description Worksheet
Please Complete for Each Project

Company Name: Zakłady Chemiczne "Organika-Azot" S.A. in Jaworzno

Date completed: September, 1994.

Company Representative and Title:

1. Waste Minimization Project Title	Recycling of industrial water.		
2. Waste Minimization Technique* (circle all that apply)	CH EQ (OP) (PR) PS Other (describe)		
3. Chemical(s) or Energy Units Effected (use additional sheet if necessary) Role and form of chemical in production process: G = gas, L = liquid, S = solid (circle all that apply)	Chemical Name Raw material G L S Product G L S Waste G (L) S	Chemical Name Raw material G L S Product G L S Waste G L S	Energy Units (check all that apply) Electricity Steam Coal Natural Gas Other.(describe)
4. Quantity of constituent reduced (a) Amount reduced annually as waste	150000 m^3/Year		
(b) Amount of waste reduced per unit of production	-		
(c) Amount reduced annually as raw material or energy	150000 m^3/Year		
(d) Amount of raw material or energy reduced per unit of production	-		
5. (a) Percent reduction of waste generated	25%		
(b) Percent reduction of raw material or energy used	30%		
6. Capital costs for implementation (U.S. dollars)	1040 U.S.D.		
7. Dollars saved (annually)	21600 U.S.D.		
8. Did the product or process yield change due to the activity? (If yes, please give percent change and indicate direction)	- % Increased Decreased	% Increased Decreased	
9. How was the minimization project first identified?	Suggestion from plant menagement water treatment		

* CH = chemical substitution, EQ = equipment change, OP = operational change, PR = product change, PS = process change

22

WEC - Poland Waste Minimization Project Description
Please Complete for Each Project

Company Name: Zakłady Chemiczne "Organika-Azot" S.A. in Jaworzno

Date completed: september, 1994.

Company Representative and Title:

Waste Minimization Project Title: Recycling of industrial water.

Product(s) Impacted by Waste Minimization Project:

Process Description:
(Please attach a flow diagram)

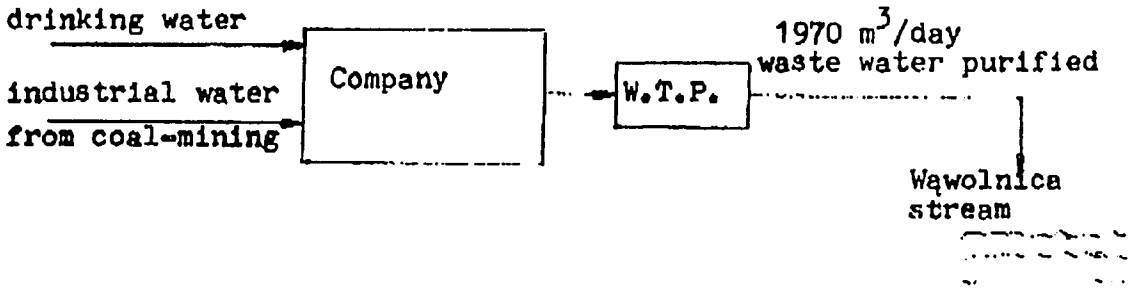

Description of Waste Minimization Project:

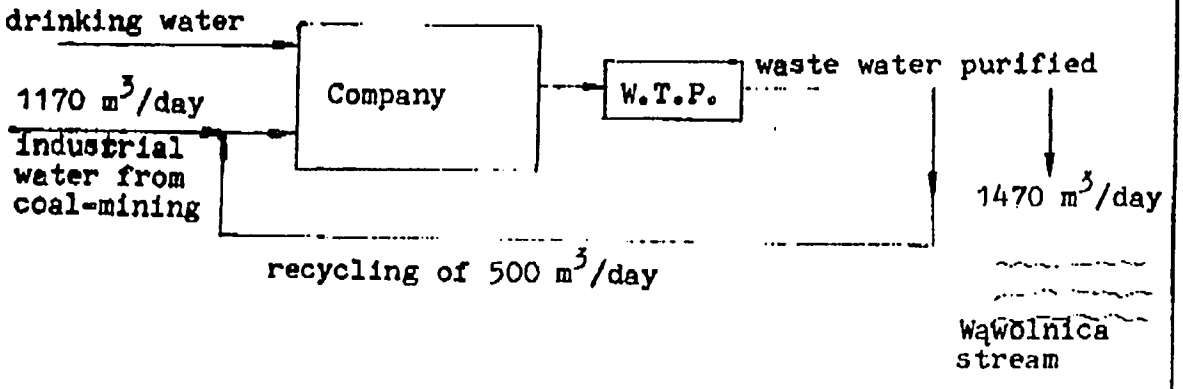

Process Diagram A: Current Process

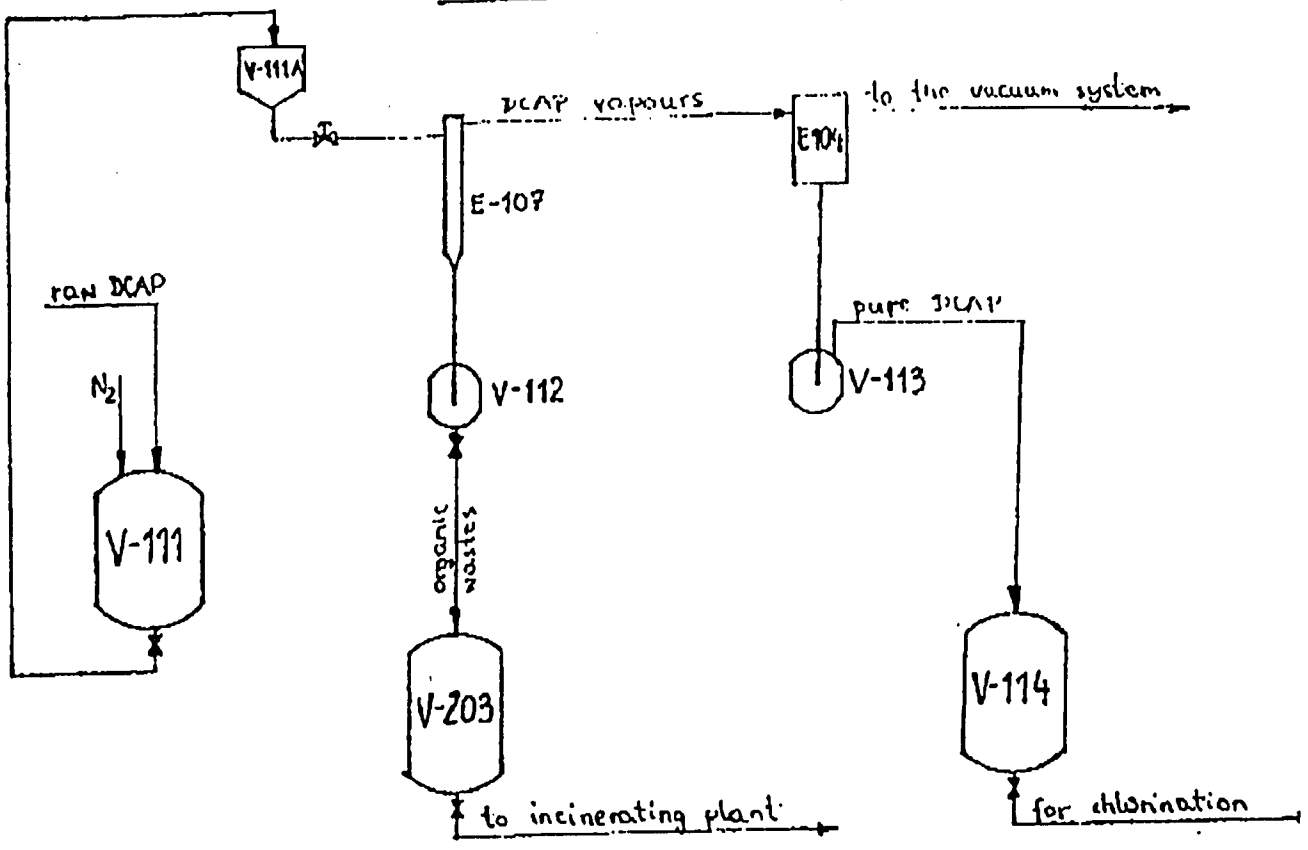

Process Diagram B: Proposed Process

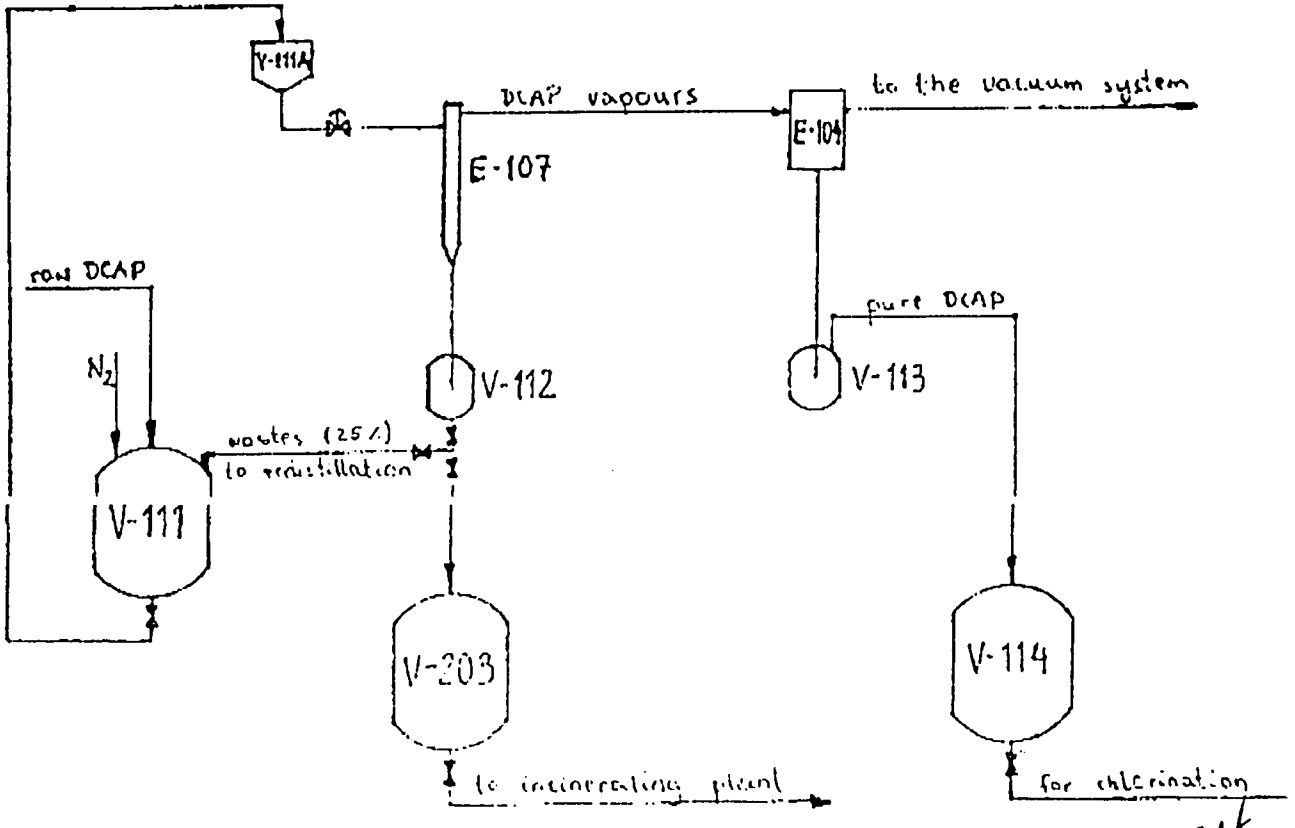

WEC - Poland Waste Minimization Project Description Worksheet
Please Complete for Each Project

Company Name: "Organika-Azot SA." - Jaworzno

Date completed: Aug., 1994

Company Representative and Title:

1. Waste Minimization Project Title	Reduction of waste-waters from the hydrolysis and washing of aluminum complex DCAP after Friedel-Crafts reaction.		
2. Waste Minimization Technique* (circle all that apply)	CH EQ (OP) PR PS Other (describe)		
3. Chemical(s) or Energy Units Effected (use additional sheet if necessary) Role and form of chemical in production process: G = gas, L = liquid, S = solid (circle all that apply)	Chemical Name Raw material G (L) (S) Product G (L) S Waste G (L) S	Chemical Name Raw material G L S Product G L S Waste G L S	Energy Units (check all that apply) Electricity Steam Coal Natural Gas Other (describe)
4. Quantity of constituent reduced (a) Amount reduced annually as waste	363 m^3/year		
(b) Amount of waste reduced per unit of production	1.8 m^3/1t		
(c) Amount reduced annually as raw material or energy	7.3 mt/year		
(d) Amount of raw material or energy reduced per unit of production	35 kg/1t		
5. (a) Percent reduction of waste generated	unknown		
(b) Percent reduction of raw material or energy used	2%		
6. Capital costs for implementation (U.S. dollars)	1087 USD		
7. Dollars saved (annually)	12083 USD		
8. Did the product or process yield change due to the activity? (If yes, please give percent change and indicate direction)	1% % Increased Decreased	% Increased Decreased	
9. How was the minimization project first identified?	Suggestion from project manager		

* CH = chemical substitution, EQ = equipment change, OP = operational change, PR = product change, PS = process change

Aug., 1994

Company Representative and Title:

Waste Minimization Project Title: Reduction of waste-waters from the hydrolysis and washing of aluminum complex DCAP after Friedel-Crafts reaction.

Product(s) Impacted by Waste Minimization Project:

Process Description:
(Please attach a flow diagram)

Dichloroacetophenone/DCAP/ is a transient substance in the production process of insectocide-birlane.
The second stage of the process is hydrolysis of aluminum complex DCAP and after that extraction of DCAP using benzine and washing of organic pfase of DCAP. As a result of this operation the aluminum waste-waters arise which are partically sold as 25% sollution of aluminum chloride and the remaining part from the second and the third washing is directed to the water treatment plant

Description of Waste Minimization Project:

The project consistin turning aluminum wastes from the second and the third washing of organic phase of DCAP back to the hydrolysis instead of technological water.
That allows to eliminate the waste-waters from the stage of DCAP washing and also to regain about 1% of organic pfase.
That gives savings due to reduced sevage disposal and regaining of raw materials.
Technical realization of this project consisted in arrangement of pipeline transporting wastes from the waste-waters receiver to the hydrolysis reactor. Existing aluminum chloride pump has been used.

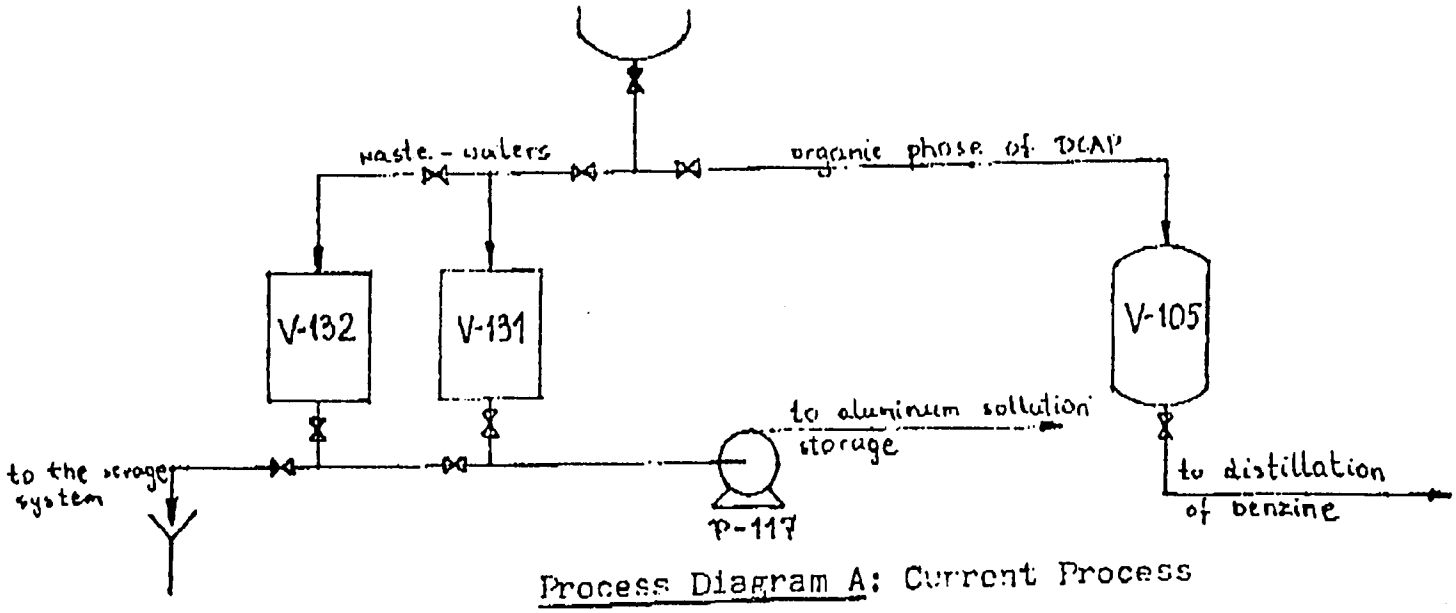

Process Diagram A: Current Process

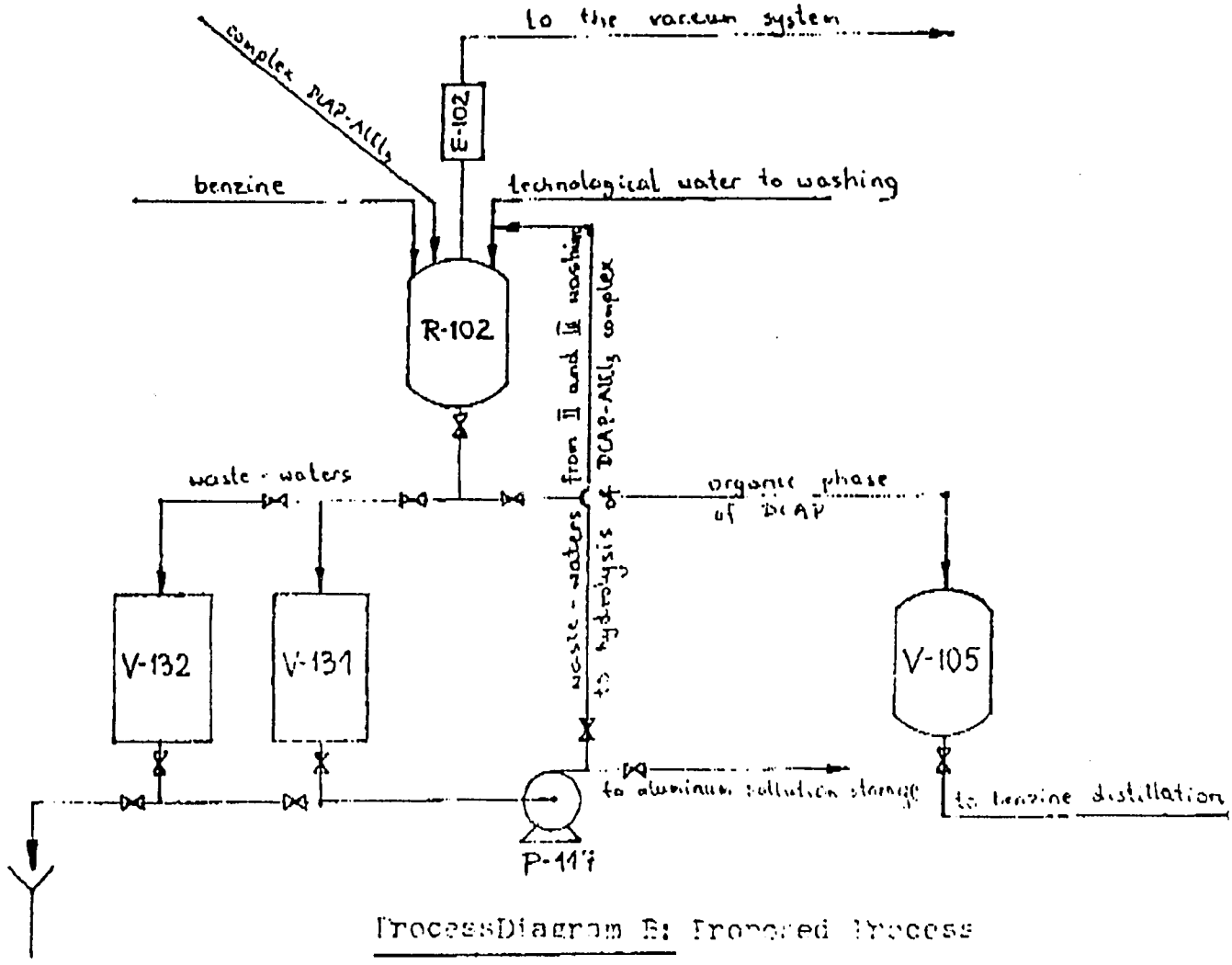

ProcessDiagram B: Proposed Process

WEC - Poland Waste Minimization Project Description Worksheet
Please Complete for Each Project

Company Name: "Organika-Azot" SA. - Jaworzno

Date completed: Sept., 1994

Company Representative and Title:

1. Waste Minimization Project Title	Pure dichloroacetophenone recovery by means of partial redistillation of organic wastes arising in the purification process of raw DCAP.		
2. Waste Minimization Technique* (circle all that apply)	CH EQ (OP) PR PS Other (describe)		
3. Chemical(s) or Energy Units Effected (use additional sheet if necessary) Role and form of chemical in production process: G = gas, L = liquid, S = solid (circle all that apply)	Chemical Name Raw material G (L) S Product G (L) S Waste G (L) S	Chemical Name Raw material G L S Product G L S Waste G L S	Energy Units (check all that apply) Electricity Steam Coal Natural Gas Other.(describe)
4. Quantity of constituent reduced (a) Amount reduced annually as waste	1500 kg/year		
(b) Amount of waste reduced per unit of production	7.5 kg/1t		
(c) Amount reduced annually as raw material or energy	4500 kg/year		
(d) Amount of raw material or energy reduced per unit of production	22 kg/1t		
5. (a) Percent reduction of waste generated	unknown /no data/		
(b) Percent reduction of raw material or energy used	1.5%		
6. Capital costs for implementation (U.S. dollars)	835 USD		
7. Dollars saved (annually)	11 885 USD		
8. Did the product or process yield change due to the activity? (If yes, please give percent change and indicate direction)	% 1% Increased Decreased	% Increased Decreased	
9. How was the minimization project first identified?	Suggestion from project manager		

* CH = chemical substitution, EQ = equipment change, OP = operational change, PR = product change, PS = process change

28

WEC - Poland Waste Minimization Project Description
Please Complete for Each Project

Company Name: "Organika-Azot SA." - Jaworzno

Date completed: Sept., 1994

Company Representative and Title:

Waste Minimization Project Title: Pure dichloroacetophenone recovery by means of partial redistillation of organic wastes arising in the purifi-
Product(s) Impacted by Waste Minimization Project: cation process of raw DCAP.

Process Description:
(Please attach a flow diagram)

One of the birlane production stages is purification of raw DCAP by continous distillation in the wiped film evaporator/LUVA/.
Raw DCAP is pressed by means of nitrogene from storage tank to LUVA continously with the flow rate 45 kg/h. The distillation temperature is 120 ^{o}C and the pressure 10 mm Hg.
All the variable parameters in the evaporating system are controlled automatically.
DCAP distilated is condensed and cooled in the evaporator condenser and flows down to the storage reservoir.
Organic wastes from distillation flows down gravitationally to the liquid wastes tank and are burned in the incinerating plant.
The contents of DCAP in those wastes is overe 50%.
The remaining substances are tar products unindentified.

Description of Waste Minimization Project:

The point of the project is partial turning back of after distillation wastes in amount of about 15 kg/1t of birlane for the second distillation in LUVA.
In practice it is periodical turning back those organic wastes to the storage tank of raw DCAP in amount 50 kg per 3 tons of raw dichloroacetopfenone/DCAP/.
Wastes and raw DCAP are distilled for the second time.
Partial redistillation of liquid wastes of LUVA allows to regain about 7.5 kg of pure DCAP per 1 ton of birlane and to reduce the total amount of after distillation wastes.

BEST AVAILABLE COPY

COMPANY NAME: Blachownia
LOCATION: Kedzierzyn-Kozle, Poland
DATE OF VISIT: November 8, 1994

MEETING ATTENDEES

Kazimierz Kalinski	Director
Antoni M. Zelany	Technical Director
Roman Galonski	Chief Specialist, Environmental Department
Jerzy Marszycki	Petrochemical Works Manager
Marek Pelczer	Chief, Benzol Plant
Magdalena Slipka	Environmental Department
Izabela Helik	Process Engineer, Petrochemical Works
Joachim Willner	Technologist Specialist, Petrochemical Works
Beata Najnert	Petrochemical Laboratory (translator)
Idzislaw Dec	Technology
Zbigniew Fular	
Roman Moczur	
Jan Muszynski	Analytical Chemical Specialist
Jan Bronikowski	Consultant, Prosynchem
Zbigniew Sorotowicz	Consultant, Prosynchem

OVERVIEW

Blachownia has adopted an approach which focuses on the completion of several projects to demonstrate successful waste minimization activities to its employees. As such it indicated that it has not yet developed a waste minimization policy and specific goals. The initial waste minimization effort was slow in starting due to restructuring and the lack of engineering personnel according to Director Kalinski. Estimated savings from proposed waste minimization are $262,000 based on investments of $23,500, with payback periods from immediate to three months. The first round of projects solicited by a competition among employees generated six projects. Additional competitions are scheduled for 1994 (energy) and 1995 (hydrocarbon reductions). The company initially proposed and has agreed to jointly fund a project to increase product yield from the benzol recovery unit. There are several procurement and customs issues which must be resolved related to this project.

The company is concentrating on lowering production costs to improve its competitive position. The benefit of waste minimization in lowering production costs should be obvious. Privatization is expected to be completed as of January 1, 1995, with ownership vested in a fund with shares distributed to workers (15%), government (25%), and public shares (60%). The company is interested in competitive loans since it has plans to upgrade its benzol production technology. It has already successfully obtained financing for other projects through the Polish EkoFund.

20

Areas which should be reviewed for additional emphasis include improved progress reporting to senior management to strengthen management support and to generate more enthusiasm of production level personnel responsible for carrying out the program. More involvement of the Waste Minimization Committee in a coordinating role to develop goals and priortize projects to reach the goals is also desirable.

PROJECT STATUS

Seven projects were presented by Blachownia. The project descriptions prepared by Blachownia are in Appendix C. The economic benefits of all projects should be reviewed to ensure that all cost savings are considered. A helpful guide is the Polish translation of the USEPA Waste Minimization Manual (Ocena mozliwosci minimalizacji odpadow, Annex A, page 35). Summaries of the projects follow:

1. Project 4/94 (Reducing Water Consumption From Water Treatment After Rinse)
This project must be reviewed to determine whether the estimated reductions in water consumption are actual savings based on water use reductions. Based on the information provided, it appears that the savings are related to eliminating the previous costs of treating the rinse water in the wastewater treatment plant and not reduced freshwater intake. Blachownia will provide a complete water flow scheme relating to water use in the entire plant. Clarification of the estimated savings is also related to savings described in Project 29/94 (Sanitary water loss from regeneration).

2. Project 26/94 (Decreasing Naphthalene Emissions From Storage Tanks)
This project is scheduled for completion by December, 1994. A revised diagram to more clearly describe the project will be prepared by Blachownia.

3. Project 28/94 (Changing of Filter Agents)
Testing of the alternative filter media to determine its absorptive capacity, optimum density and other technical details is in progress. Scheduled completion is at an undetermined date in 1995.

4. Project 29/94 (Automation of Controls for Sanitary Water treatment)
The estimated savings from reduced water consumption this project must be re-evaluated with Project 4/94.

5. Project 30/94 (Power Consumption Reduction of Sewage Pumping)
This project is scheduled for completion by December, 1994. Comparison of use of variable drive motors was discussed. Blachownia indicated that these were too expensive, but had no cost comparison on the premise that the lower horsepower motors were already available in the plant.

6. Project 32/94 (Aeration of Benzol Recovery Plant Wastes)
This project is being evaluated, with no estimated completion date provided.

7. Increased Yield of Benzol By Improved Analytical Procedures
This project would involve cost sharing between WEC and Blachownia in the purchase of a gas chromatograph to analyze the process stream to increase product yield and reduce waste. Equipment specifications are being reviewed with final specifications expected shortly. Competitive bids will be solicited since the estimated cost of the equipment is more than $25,000.

Proposed Leak Detection and Repair Project
Blachownia described problems related to the ethylene polymerization plant. This plant uses dated ICI technology. While some improvements in loss reduction has been achieved over the last three years, there are still additional opportunities for improvement. Current ethylene loss in this process are estimated at about 40 kg/ton of polyethylene, of which about 75% is estimated to be from leaks and fugitive losses. Accordingly, it was suggested that a leak detection and repair program (LDAR) be considered. An LDAR can be quickly implemented at low cost with a portable organic vapor analyzer. It is a very visible program which can show quick results, and is consistent with the company's approach to raise employee awareness. In addition, it was suggested that ICI be contacted to determine expected operating losses and possible recommendations to address operating problems. This project should be seriously considered by Blachownia.

EQUIPMENT REQUEST

Two possible equipment requests were discussed as follows:

1. Organic vapor analyzer for leak detection and repair program appears to be a very viable project. Savings from this activity could yield economic benefits to pay for the gas chromatograph unit for benzol recovery project.

2. Gas chromatograph specifications for the benzol recovery project will be finalized by the plant in order to obtain bids. The cost sharing aspect of this project requires the resolution of issues related to procurement, payment and delivery of the equipment.

RECOMMENDATIONS

1. Waste Minimization Committee should act in a greater coordination role.

2. Prepare and distribute more specific goals and objectives of the waste minimization program to continue program momentum established through short term projects.

3. Establish a progress reporting system to provide management with regular waste minimization status reports.

4. Evaluate the economic benefits of a leak detection and repair program.

5. Make better use of local consultants by assigning specific waste minimization related projects.

ACTION ITEMS

BLACHOWNIA

1. Prepare revised project descriptions of completed projects using the guide provided by WEC.

2. Contact ICI regarding possible recommendations to minimize ethylene losses from polyethylene production.

3. Complete gas chromatograph specifications review and submit to WEC.

4. Prepare waste minimization program policy and goals and distribute to all employees.

5. Send copies of all newspaper publicity to WEC.

6. Send summary of general terms and conditions for financing to WEC.

7. Send updated list of waste minimization committee members.

WEC

1. Send specifications and quotations from other GC suppliers.

2. Review customs and procurement requirements for shared cost purchases and advise Blachownia.

APPENDIX B

RATIONALIZATION PROJECTS CONNECTED WITH ENVIRONMENT PROTECTION ENTERED FOR A COMPETITION ANNOUNCED WITHIN REALIZATION OF WASTES MINIMIZATION PROGRAM

I

PROJECT No : 4/94

ORIGINATORS : Zbigniew FULAR, Marian MAKOWSKI, Piotr KRYWIONEK

TITLE : " Using of after - washing water from water - tower to make up the cooling loop of Carbochemical Works."

THE PROJECT DESCRIPTION :

1. Existing state.

In process of sanitary water conditioning a stream of after - washing water is formed that through after - washing water basin, where sedimentation of suspended solids takes place, is directed to the Central Waste Water Treatment Plant. Amount of the after - washing water is, on average, 9500 m^3/month (114,000 m^3/year).

2. Proposed change.

After - washing water from the basin of after - washing water should be directed to the basin of water from cooling water loop in

Carbochemical Works. The difference in water-level between both basins is 0.98 m with a slop to the direction of basin of cooling water from Carbochemical Works.

3. Advantages by the project implement.

- Decreasing of water consumption taken from Odra river by 114,000 m^3/year.
- Decreasing of Central Waste Water Treatment Plant loading by the same amount of wastes.
- Saving in power consumption that has been lost for anew introducing of industrial water from Central Water Treatment Plant to the loop: 51 hours of pump operation per year with pump capacity 2250 m^3/year and power 75 kW.

Total economical effect :

1,164,000,000 zloty/year (about 53,000 US $/year)

The effect will be decreased after implement of 29/94 project that assumed decreasing of water amount, using for filters and manganese removing apparatus regeneration, by 50%.

4. Expected outlays.

Thanks to a using of existed pipeline, the project implement doesn't need any financial expenditures.

Projekt No: 4/94

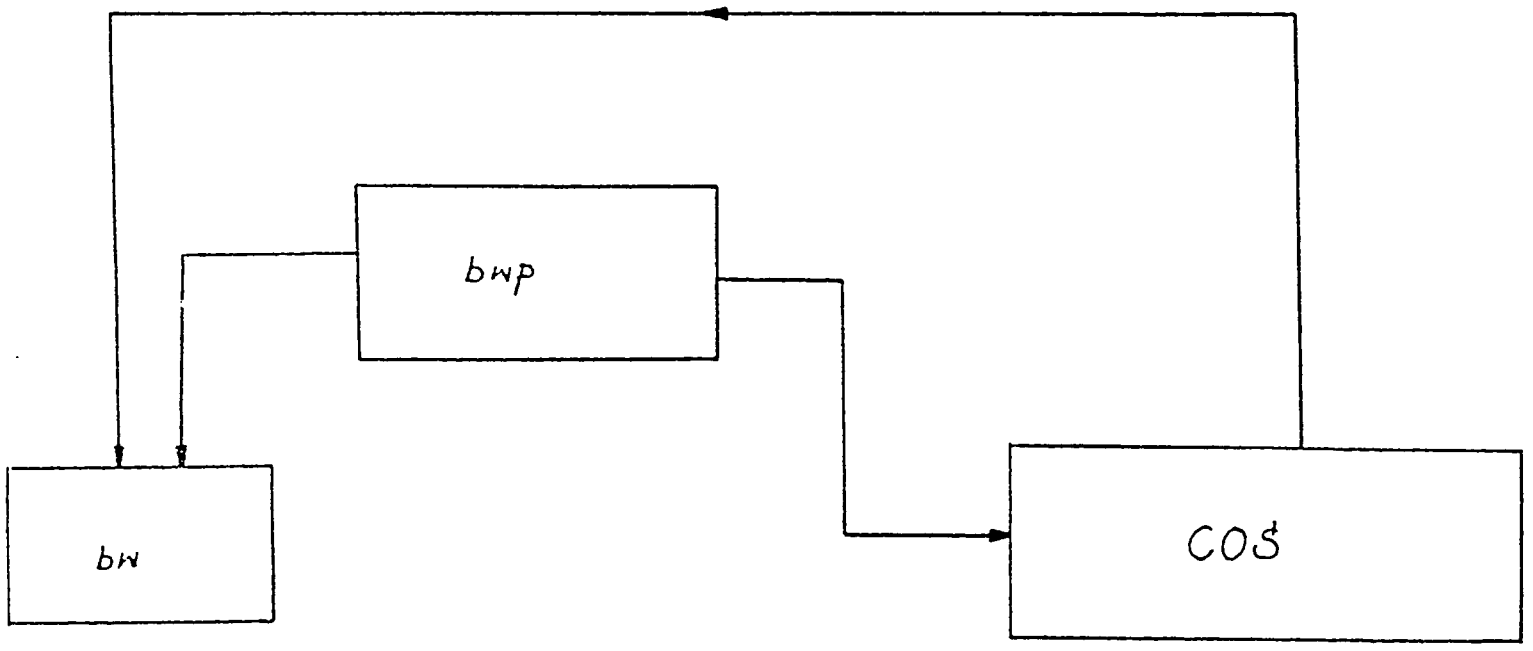

COŠ - Central Waste Water Treatment Plant

bw - both basin

bwp - water basin

II

PROJECT No : 26/94

ORIGINATORS : Janusz BRZEZIŃSKI, Zdzisław DEC, Andrzej KUCHAR, Józef PIĘKOS, Janusz ŻBIKOWSKI

TITLE : " Decreasing of naphthalene emission to the atmosphere by changing the manner of naphthalene oil sending on the line of Tar Continuously Distillation plant - Naphthalene Continuously Distillation plant."

PROJECT DESCRIPTION :

1. Existing state.

Naphthalene oil, one of the fraction received during continuously distillation of cocery tar, is taken to two tanks of capacity 50 m^3 each of them and from the tanks is periodically pumped over to the storage tanks of Tar Continuously Distillation plant. After collecting a proper amount of the naphthalene, the oil is sent to one of storage tank of Naphthalene Continuously Distillation plant from where it is taken, as necessary, to the further treatment.

2. Proposed change.

One of the intermediate storage unit - storage tanks of Tar Continuously Distillation plant - should be eliminated. For this purpose a pipeline between collectors of lines : " receivers - storage tanks of Tar Continuously Distillation plant " and " storage tanks of Tar Continuously Distillation plant - storage tanks of Napithalene

Continuously Distillation plant " should be build up.

3. Advantages by the project implement.

- Decreasing of naphthalene loss that has been lost during unnecessary pumping operation - 1200 kg/year.
- Decreasing of power consumption - 7875 kWh/year.
- Decreasing of heat energy (water steam) consumption that has been lost for naphthalene oil heating in storage tanks of Tar Continuously Distillation plant and for steaming of collector line : " receivers - storage tanks of Tar Continuously Distillation plant " - 1600 Mg of steam on 0.7 Geal/Mg.

Total economical effect :

410,000,000 zloty/year (about 18,500 US $/year)

4. Expected outlays.

The project realization cost is an effect of necessity to build up of additional collector's heating segment and it is 20,000,000 zloty (about 900 US $).

Return of outlays will become in the second month of the project implement.

Projekt No: 26/94

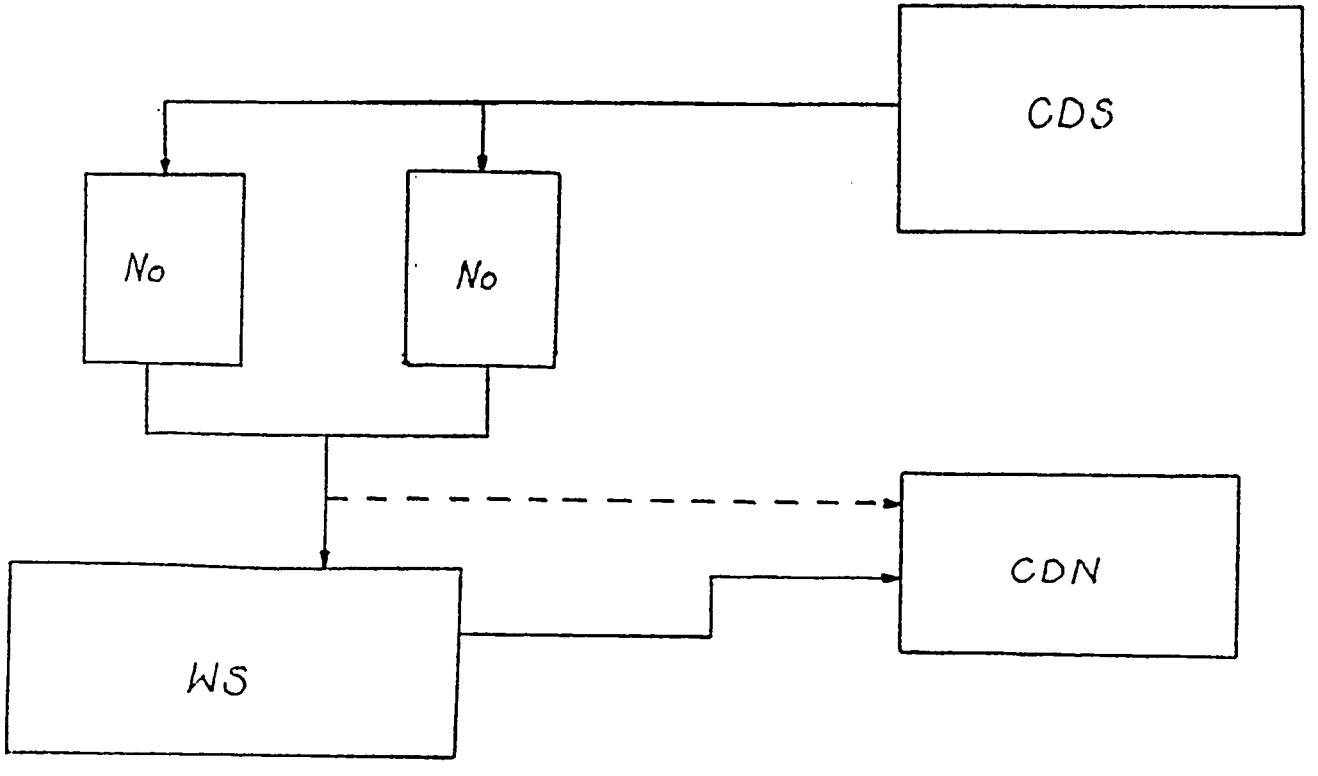

No - Naphthalene oil

CDS - Tar Continuously Disstillation plant

CDN - Naphthalene Continously Distallation plant

WS - Tar Plant

III

PROJECT No : 28/94

ORIGINATORS : Michał JURKIEWICZ, Brunon FEDYNA, Józef MICHALISZYN

TITLE : " Changing of filtration agent of tarred up sewage."

PROJECT DESCRIPTION :

1. Existing state.

Coalescence filters of Local Tarred Up Sewage Treatment Plant, belonging to Cocery Tar Recovery Plant, are filled up with two coke layers of a different granulation. The coke filling is lied onto wooden grate with slats' spacing of 10 mm. Exchange of filtration bed is carried out once per year; each time 130 Mg of coke. The taken out coke, with occluded tar compounds, is fired in a burner for wastes burning to remove tar compounds. The exchange operation together with the coke firing takes 2 - 3 months. Overfired coke can't be used again as a feed to the filters. There are also difficulties with its purchasing because it is a fuel of worse quality (now it is storage).

2. Proposed change

Replace coke with bales of pressing rye or wheat straw of dimensions : 2 x 1 x 1 m that after using will be burned in the burner for wastes burning.

3. Advantages by the project implement.

- Elimination of waste that is overfired coke - about 130 Mg/year.
- Replacing of expensive coke with cheaper straw: 130 Mg of coke (4,000,000 zloty/Mg = 180 $/Mg) corresponds to 200 bales (120,000 zloty/bale = 5.5 $/bale).
- Decreasing of exchange costs by shortening the crane operation time and elimination of the excavator and loader operation: by 68,000,000 zloty per one exchange.
- Improvement of operators working conditions.

Total economical effect :

566,120,000 zloty/year (about 25,700 $/year)

4. Expected outlays.

The project implement doesn't need any financial expenditures.

Projekt No: 28/94

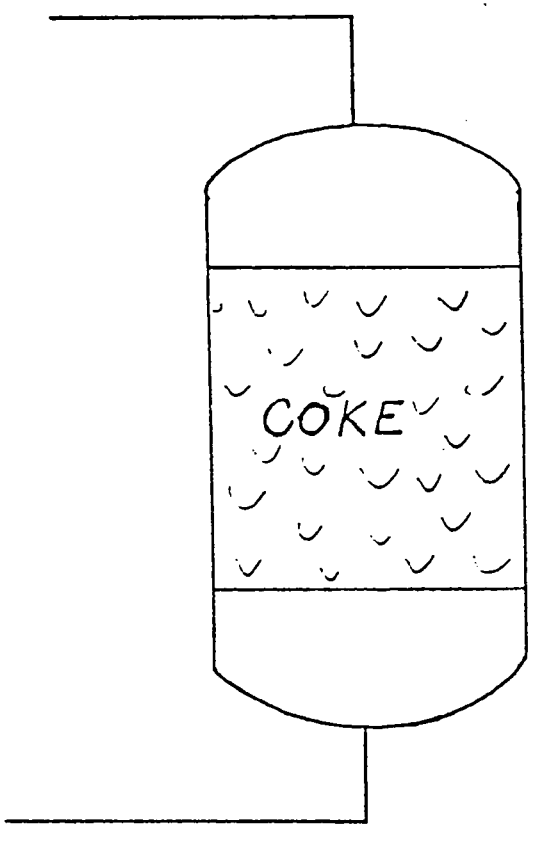

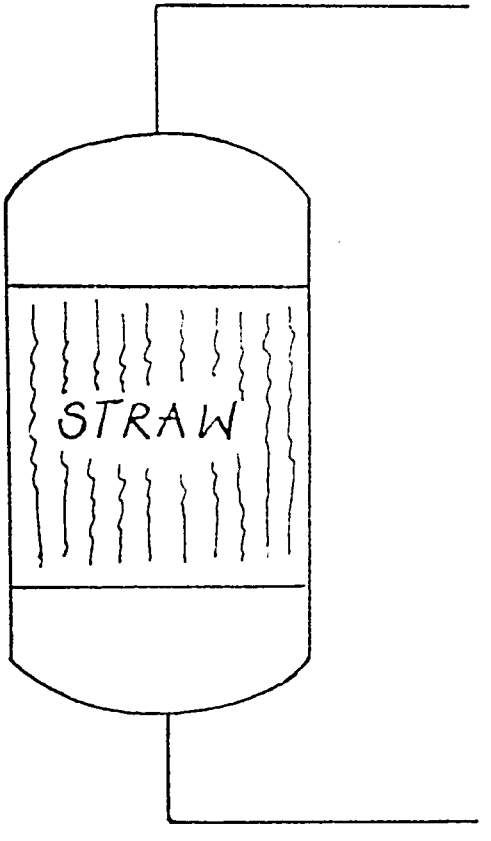

IV

PROJECT No : 29/94

ORIGINATORS : Stanisław GAŁDYS, Roman KOCZUR, Józef KŁOSIŃSKI, Marian MAKOWSKI, Mariusz ROZMIAREK, Henryk MAŁKOWSKI, Maria STRYCZEK, Henryk PIECIŁACZEK

TITLE : " Rationalization of regeneration process of sanitary water conditioning apparatus."
Decreasing of sanitary water losses.

PROJECT DESCRIPTION :

1. Existing state.

In sanitary water production process, the filters and manganese removing apparatus regeneration is carried out on the basis of manual control, according to a schedule settled by theoretical calculations and experience. It results in an excessive water consumption, that is, 114,000 m^3/year, for carrying out the regeneration.

2. Proposed change.

Replace manual control with automatic control system that using microprocessor programmer of SUCOS PS 24 type cooperated with turbidity sensor of OP 52 type and flow transmitter of conditioned water to the loop. The system programming will be performed on the basis of laboratory analytical results.

3. Advantages by the project implement.

- Decreasing of sanitary water consumption per one regeneration operation by 50%, i.e. by 57,000 m^3/year. The current price of sanitary water is 7798 zloty/m^3 (35.45 zloty).
- Decreasing amount of purified sewage by a.m. amount. Saving cost of 1 m^3 sewage is 6000 zloty (27.27 zloty).
- Saving of power consumption required for pumping over of purified sewage to the Filters Station; 25 hours of the pump operation per year, pump capacity 2250 m^3/year and power 75 kW.

Total economical effect :

788,016,000 zloty/year (about 35,800 $/year)

The effect will decrease after project 4/94 implement that assumes direction of water used for filters and manganese removing apparatus regeneration direct to cooling loop of Carbochemical Works. The last effect results in decreasing of sanitary water consumption for regeneration will be :

444,486,000 zloty/year (20,200 $/year)

4. Expected outlays :

The cost of the project implement consist of building up cost of automatic control system (materials + labor), total :

70,000,000 zloty (3,200 $)

The cost will return by three months of the project application.

45

The real cost will be significantly lower because the turbidity sensor bought a few years ago and not using till now will be applied.

Projekt No : 29/94

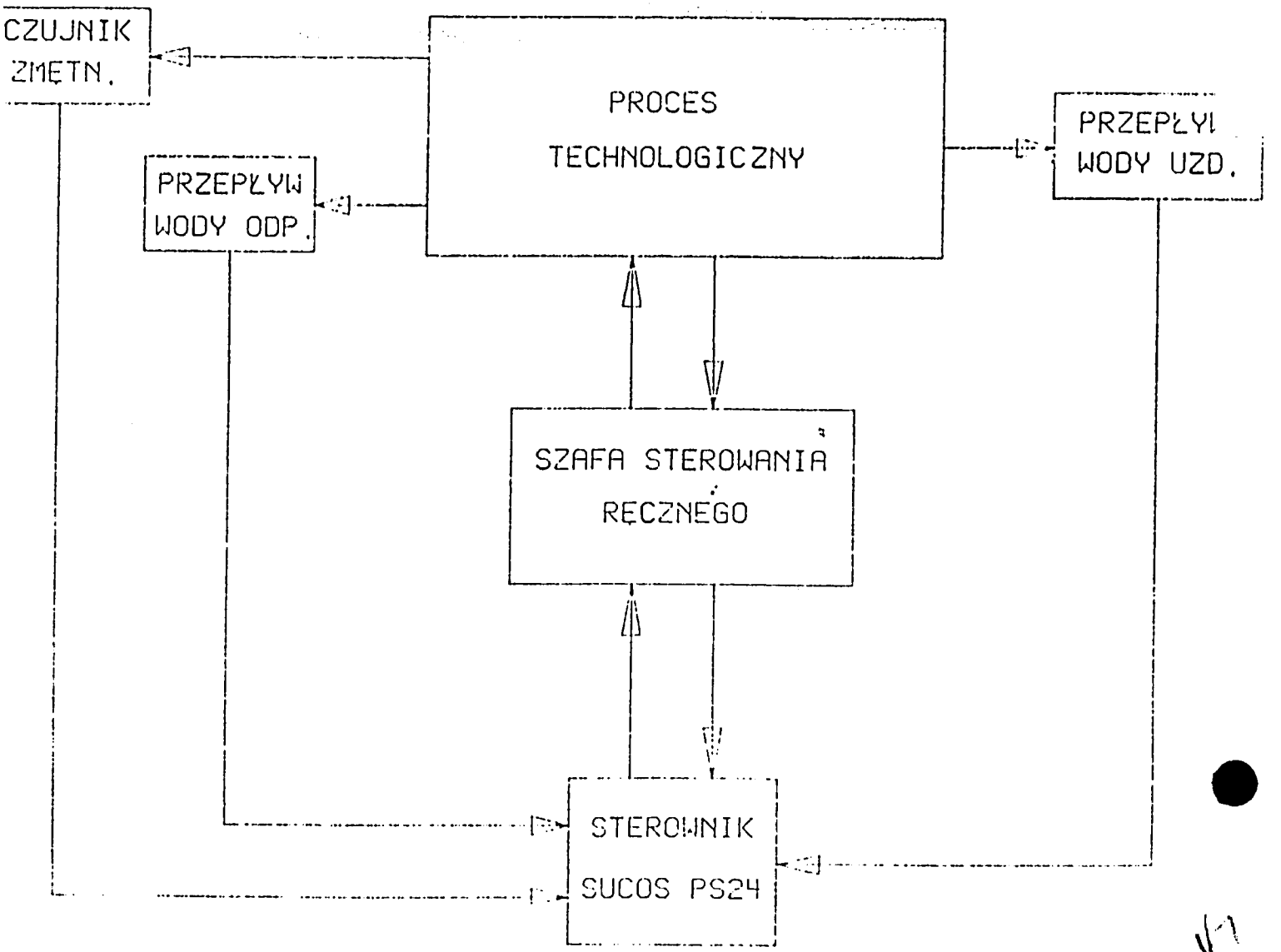

V

PROJECT No : 30/94

ORIGINATORS : Roman KOCZUR, Jadwiga ŻUREK, Marian PIECZYRAK, Henryk BRODZIAK

TITLE : " Rationalization of power consumption on sewage pumping."

PROJECT DESCRIPTION :

1. Existing state.

To pump over mixed and pure sewage in Cental Waste Water Treatment Plant pumps of KA 300R are used. The pumps have installed power excess (motors 70 kW/ 960 r.p.m.) what causes excessive power consumption.

2. Proposed change.

The pumps' motors should be suited to the requirements by means of using its characteristics and by adjust their flow rate. So :

- in case of mixed sewage, motors of power 35 kW and 725 r.p.m. multiple by l/min. (3 pieces) should be installed
- in case of pure sewage :
    - left on one pump-stand the pump with motor of 75 kW and 725 r.p.m.
    - install the motor of power 35 kW and 960 r.p.m. on the second pump-stand
    - on the third one : 19 kW and 725 r.p.m.

Starting up of a particular pump-stand should be performed depending upon required flow rate; respectively :

- above 500 m^3/h
- from 350 m^3/h up to 500 m^3/h
- below 350 m^3/h.

3. Advantages by the project implement.

Saving of power consumption in amount of 730,760 kW/year that with a current electricity price gives :

584,608,000 zloty/year (26,500 US $/year)

4. Expected layouts.

Total cost of five motors exchange (materials + labor) is :

160,000,000 (about 7,300 US $).

The layouts will return in the fourth month of implement.

The exchange cost will be lower thanks to the old motors applying in the other place during a routine maintenance.

The project applying caused decreasing of project 4/94 and eventually project 29/94 implement effects.

VII

PROJECT No : 32/94

ORIGINATORS : Maria NIEDERLIŃSKA-STRYCZEK, Miroslaw TRAWIŃSKI, Stanislaw GAŁDYS, Antoni ŻELAZNY, Roman KOCZUR, Marek PELCZAR, Jan WITKOWSKI, Józef TWOREK, Halina PODGÓRNA

TITLE : " Purification of wastes from Benzol Recovery Plant by aeration method. "

PROJECT DESCRIPTION :

1. Existing state.

Wastes formed in Raw Benzol Recovery Plant are - after hydrocarbons' phase separation by means of settling - neutralized and next subjected to a coagulation with aluminum sulfate or chloride. After the suspension separation, the wastes are sent to the Central Waste Water Treatment Plant. Separated sediment (about 600 Mg/year) is directed for burning in rotary burner. Drawing out, transportation and burning of the sediment is expensive and troublesome. A high sodium content causes melting of furnace lining.

2. Proposed change.

The system of preliminary wastes' purification should be changed over to the aeration. For this purpose, the local Waste Water Treatment Plant of Benzol Plant should be rebuild according to the

enclosed drawing. The essence of the solution is air supply to the present flocculators. The gases carrying over with air stream will be let out with collector to technological burner CDS III where remaining not oxidized hydrocarbons will be burnt.

3. Advantages by the project implement.

Avoidance of wastes forming - after coagulated slurry - and the same costs connected with their :

- drawing out from settling tank and transportation to the burner - 107,308,000 zloty/year (about 4,850 US $)
- burning - 2,800,000,000 zloty (about 127,250 US $)
- exchange of furnace linking (it is estimated that burning of the sediment is a reason of such a four exchange per year) - 2,800,000,000 zloty/year (about 127,250 US $)

Total economical effect :

5,707,580,500 zloty/year (about 26,000 US $)

4. Expected outlays.

Realization costs consist of air supply costs to the unit, costs of collector build up that carries the gases out to the burner CDS - 250,000,000 zloty (about 11,350 US $) and operational costs (technological air) - 82,500,000 zloty/year (about 3,750 US $).

The outlays will return in the first month of the project applying.

Petrochemical Works

Raw benzol recovery plant

Rationalization of raw material distribution and refining process by means of improvement of benzol recovery analyses

1. Process description and the problem base.

Process streams of raw benzol recovery process are actually analyzed only by the method of simple distillation. It causes :

- inexact separation of particular compounds
- excessive sulfuric acid consumption
- additional wastes forming in refining process
- product losses.

2. The project purposes.

The project purposes are :

- decreasing of product losses passing now in excessive amount into residual and by - streams
- rationalization of sulfuric acid consumption (used for refining process) depending on unsaturated compounds content
- decreasing amount of wastes formed in refining process, i.e. after - refining tars and used sulfuric acid.

3. Proposed solution.

Below block diagram presents raw benzol recovery process. The main products are marked with bold face and wastes with italics.

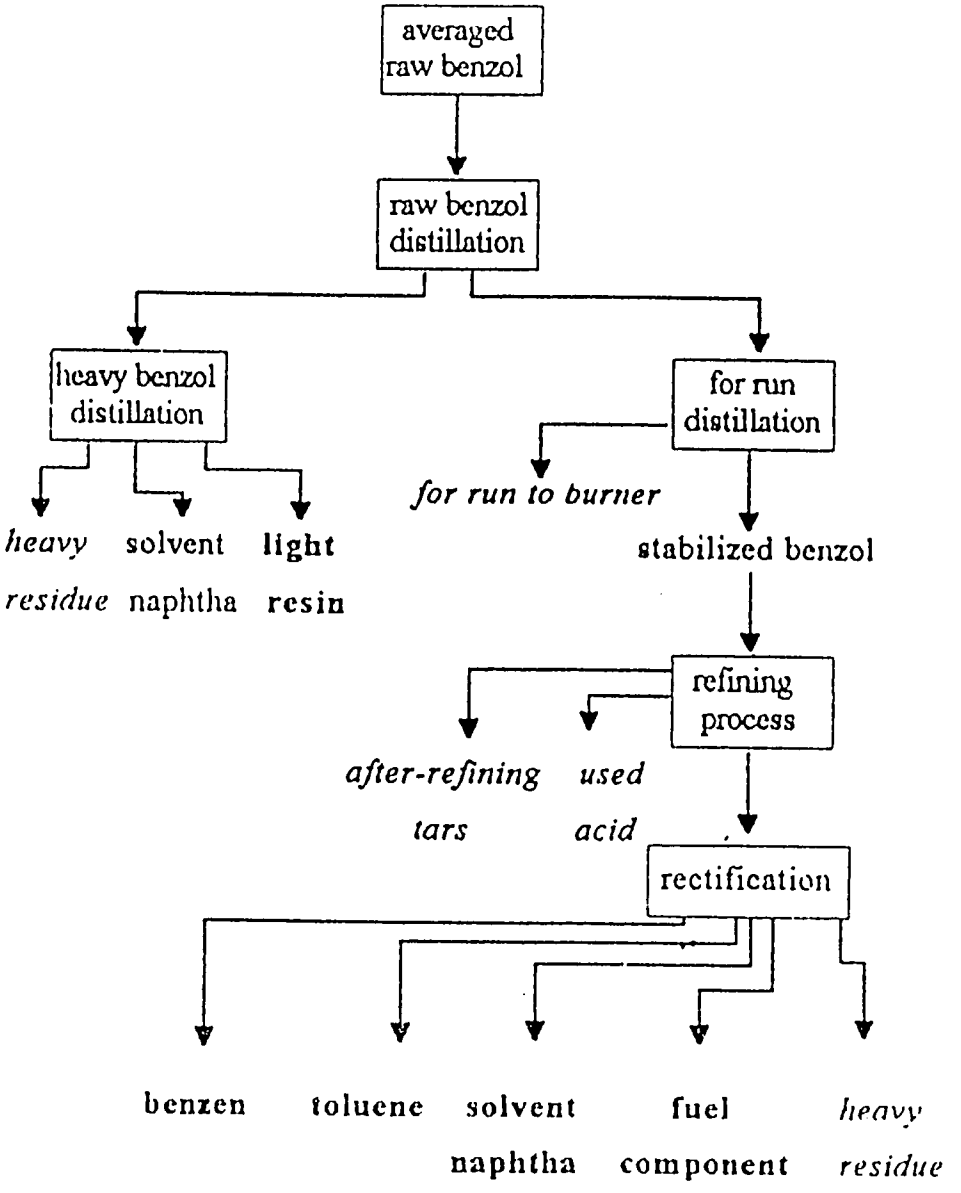

As it is showed on the diagram, the process principle lies in exact main products separation off from by - products and wastes, in this wastes from refining process. It's realized by method of distillation and rectification in a series of distillation columns. For a proper performing the distillation processes (choosing the proper feed and reflux amount, temperatures, pressure) itis necessary to know composition of each process stream; thereby exact analytical methods are required.

Currently the process streams composition are still analyzed by simple distillation that eventually in case of pure products could be efficient method, whereas it isn't sufficient for the instance of complex mixture contained many compounds because it tell nothing about content of products or other required compound important in a given phase of the process (for example, styrene content in stabilized benzol affected sulfuric acid consumption).

The only way to solve the problem are exact analyses of raw materials and half - products realized, for example, by means of gas chromatography method, that is by method commonly used all over the world.

Applying of exact analytical methods will give the following measurable advantages :

- more efficient separation of required product from raw benzol
- decreasing amount of light wastes (benzol for - run) directed to burning
- decreasing of sulfuric acid consumption in refining process
- decreasing amount of wastes formed in refining process, i.e. after - refining tars and used sulfuric acid

54

- increment of benzene, toluene, solvent naphtha, fuel component M and cumarin - indene resin yields.

Apart of a/m measurable advantages, introducing of exact analytical methods enables to react faster for variable compositions of process streams causing process disturbances and consequently allows to avoid production break downs and losses.

4. Economical analyses.

The presented economical analyses bases on estimated assumptions of products yield increments and decreasing of sulfuric acid consumption because there aren't current data of each process stream composition.

Data to the analyses are from product reports of raw benzol recovery plant in 1994 year.

As we estimated, the project implement should give the following effects :

a/ increment of benzene yield from raw benzol of about 0.2%

b/ increment of toluene yield from raw benzol of about 0.3%

c/ increment of light resin yield from raw benzol of about 0.1%

d/ decreasing of sulfuric acid consumption from about 85 kg/t of raw benzol to about 80 kg/t.

55

Costs calculation

Outlays :

- apparatus purchasing/1/		900,000,000.- zloty
- additional costs/2/		400,000,000.- zloty
	total	1,300,000,000.- zloty/3/

/1/ Proposed apparatus :

Helwett-Packard gas chromatograph HP 5890 with 2 FID detectors and 2 capillary columns and integrator 3396.

/2/ Custom duty, border tax, technical gasses purchasing and installation costs.

/3/ The exact price could differ only to a certain extend depending on detailed apparatus specification.

Profits were calculated on the basis of product data from 01-06.1994.

product	expected yields increment [%]	[Mg]	price [zloty]	value [zloty]
benzene	0.2	68	6,500,000.-	442,000,000.-
toluene	0.3	102	7,000,000.-	714,000,000.-
light resin	0.1	34	16,000,000,-	544,000,000.-
			Total	1,700,000,000.-

Profit from sulfuric acid saving :

- amount of saved sulfuric acid	170 Mg
- acid price	350,000.- zloty
- value of saved sulfuric acid	59,500,000.- zloty

54

Total profit during 6 months :

1,700,000,000.- zloty + 59,500,000.- zloty = 1,759,500,000.- zloty

Expected period of outlays return:

$$\frac{1{,}300{,}000{,}000.\text{- zloty} \times 26 \text{ weeks}}{1{,}759{,}500{,}000.\text{- zloty}} = 19 \text{ weeks}$$

$$\text{ROI} = \frac{3{,}519{,}000{,}000.\text{- zloty} \times 100}{1{,}300{,}000{,}000.\text{-}} = 270$$

5. Time of the project implement.

Expected time of the apparatus implement for the continuously analyses of process streams from raw benzol recovery plant is 1.5 month; in this 2 weeks for the apparatus connection and checking and 1 month for the proper chromatographic methods preparing.

COMPANY NAME: Bonarka
LOCATION: Krakow, Poland
DATE OF VISIT: November 2, 1994

MEETING ATTENDEES

Marek Fotygo	General Manager
Zladislaw Sieklucki	Production Manager

OVERVIEW

Bonarka has recently undergone a major reorganization of management and key technical staff. This change includes appointment of a new General Director and Production Manager of the plant. The new management of the plant welcomed participation with WEC in implementing a waste minimization program at the plant. Basically, the plant is just starting to participate in WEC's waste minimization project. Plant management is interested in implementing a waste minimization program in the plant. Plant personnel indicated that the plant is very old and antiquated in some of the production processes and equipment. The plant was originally designed to manufacture calcium phosphate at 100,000 MT/yr operating under high temperature conditions (1000 °C). To meet market demand, the plant was subsequently modified to manufacture a different product (calcium biphosphate) which required operating under much lower temperature conditions (100° C). The modified design capacity was 20,000 MT/yr. The plant is currently operating on a reduced production rate of 4,000 MT/yr due to the low market demand of the product and competition from other countries. Historically, the plant equipment has not been adequately maintained resulting in poor operating conditions, inefficient use of equipment and high production costs.

In order to be more competitive, the plant is considering major technical changes to it's manufacturing processes to improve product recovery, reduce costs and minimize wastes. Plant management would like to incorporate waste minimization options during the upgrading of the production processes currently being considered. Two major issues of concern identified were loss of product in the manufacturing processes and energy losses. Waste minimization efforts will primarily focus on these two areas.

Considering the relatively large capital investment required to implement major changes in manufacturing processes to reduce wastes, Bonarka was interested in pursuing opportunities to obtain loan from outside sources. WEC explained the general guidelines and criteria to obtain loan for environmental projects from outside financing sources.

58

PROJECT STATUS

Bonarka identified three manufacturing process areas where product and energy losses are of concern : (1) Uncontrolled particulate emissions of product in reactors and from stacks with very low product recovery, (2) Loss of product and inefficient use of energy in rotary kiln during drying process, (3) Product loss due to "caking" of product in storage silos. The plant's technical and management staff are currently evaluating major modifications to their production processes including potential options for waste minimization. Description of the proposed modification is presented in Appendix C. A waste minimization committee has been formed and will conduct brain-storming sessions with selected plant personnel to identify projects and possible solutions. Bonarka will inform WEC of the proposed waste minimization projects. Appendix D is a brief description of the proposed plant modernization project.

In addition to the proposed waste minimization projects, Bonarka informed WEC that approximately 200,000 MT of calcium fluoride waste is stock piled on site from previous manufacturing processes. This waste material can be potentially used as raw material in steel mills and cement mills. A local steel mill has expressed interest in purchasing this material at approximately 10,000 MT/yr. Bonarka is exploring other potential buyers of this waste material.

EQUIPMENT REQUEST

Equipment requests will be considered later after Bonarka identifies waste minimization projects.

RECOMMENDATIONS

1. Waste minimization committee should actively pursue to identify projects to reduce wastes.

2. Plant management should establish an overall waste minimization policy with clear goals and objectives.

3. Bonarka should identify needs for equipment to be provided by WEC within the $10,000 limit.

ACTION ITEMS

1. Bonarka will submit a report to WEC with description of proposed waste minimization projects.

APPENDIX C

Project Name	Modernization of the technological line of the production of the calcium phosphates
Project Lokation	Krakowskie Zakłady Przemysłu Nieorganicznego "Bonarka" w Krakowie, ul. Puszkarska 9, Poland
Brief Description	In the first stage, the change of the technology of the production of the fodder phosphates from thermal to low temperature process and the change of the substrates (from tricalcium phosphate to dicalcium one) have eliminated completely the HF emission in the evolving gases. The conduction of the actual process on the equipment used in former technology causes however the formation of the large quantity of the dusty waste, simultaneously at the loss of the product. In the second stage, it is anticipated to reduce substantially the emission of the dusty waste in the first step of the modernization of the technological line, which should include the installation of the reactor "High-Speed-Mixer"
Origin of Project	The elimination of the waste forming in the production process
Objectives	Environment protection, elimination of HF emission Reduction of the emission of the dust Improvement of the technology
Project Status	
Financing Status	
Counterparts	Krakowskie Zakłady Przemysłu Nieorganicznego "Bonarka" 30-542 Kraków, ul. Puszkarska 9 Poland tel. 66-45-22 fax 67-27-33 telex 322518
Contact Person	Mr Zdzisław Sieklucki Chief of Production tel. 66-40-47
Countterpart	
Project cost	170.000 $
Time Frame Est. Start Date Duration	 01.1995 10-11 months

Balanse of the production of fodder phosphate by the thermal method

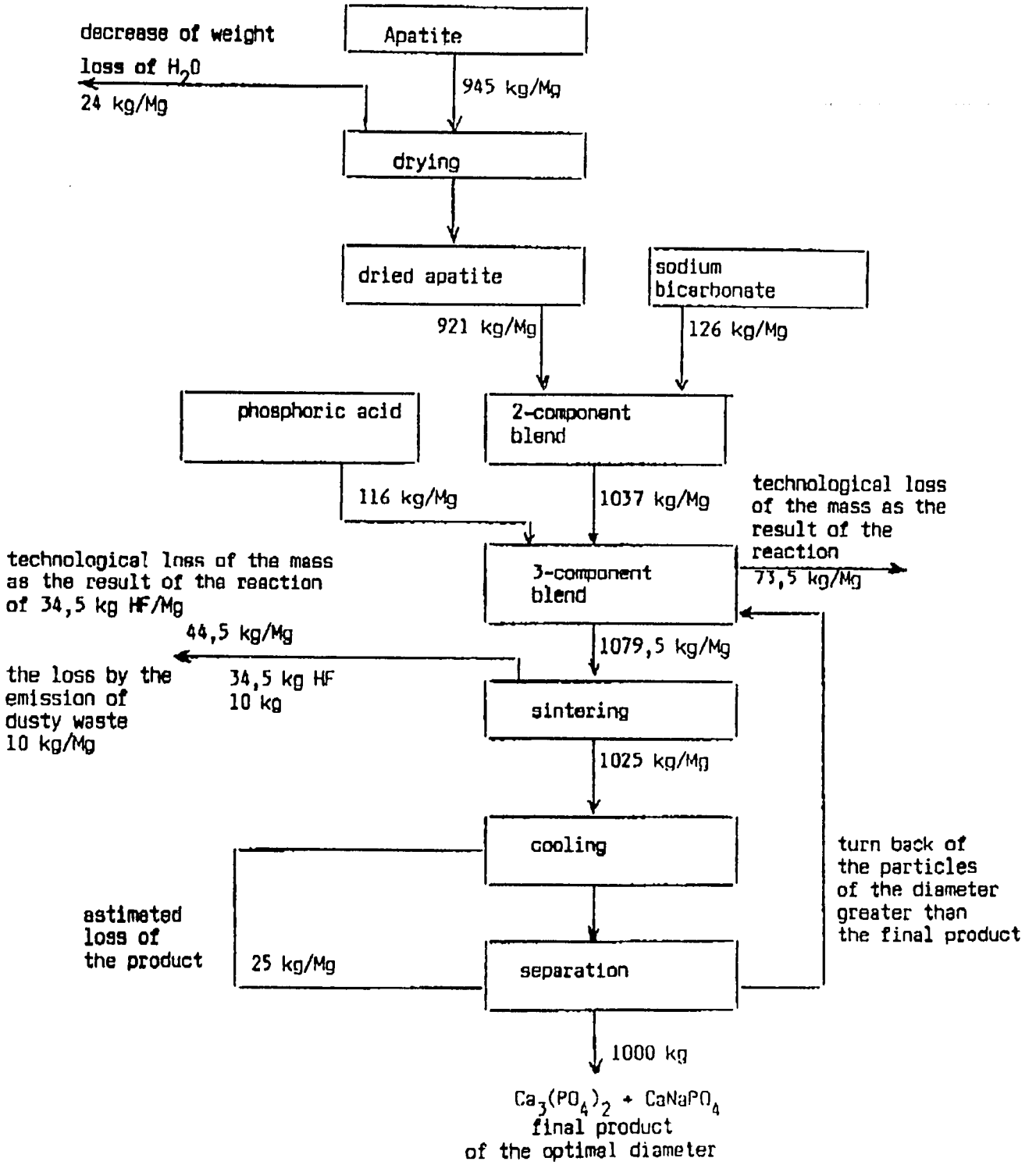

62

Balanse of the actual low temperature
process of the produktion
of fodder phosphate

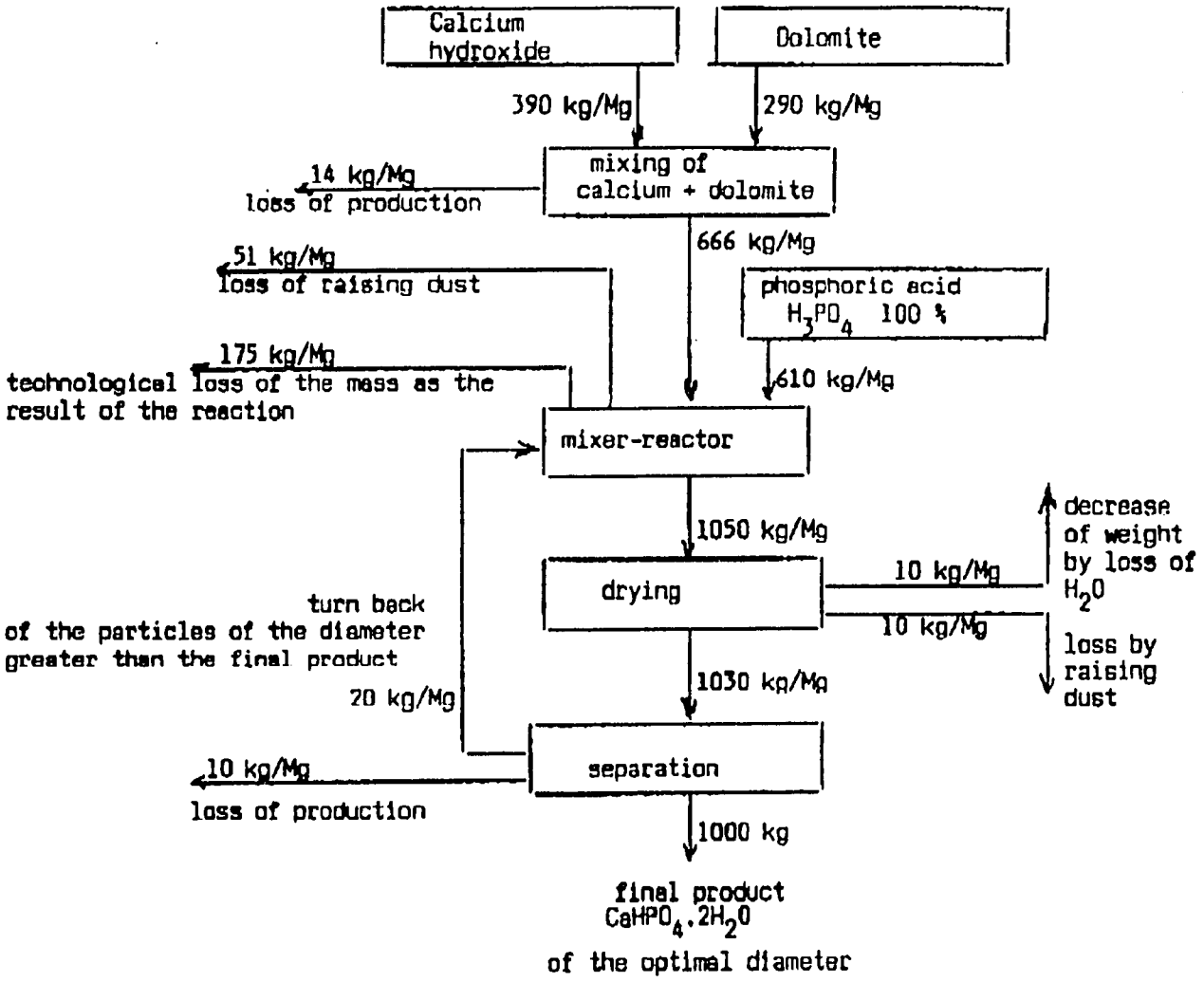

Balance of the production of fodder phosphate
on the modernized technological line
(after installation of the reactor)
counted for 1 Mg of the product

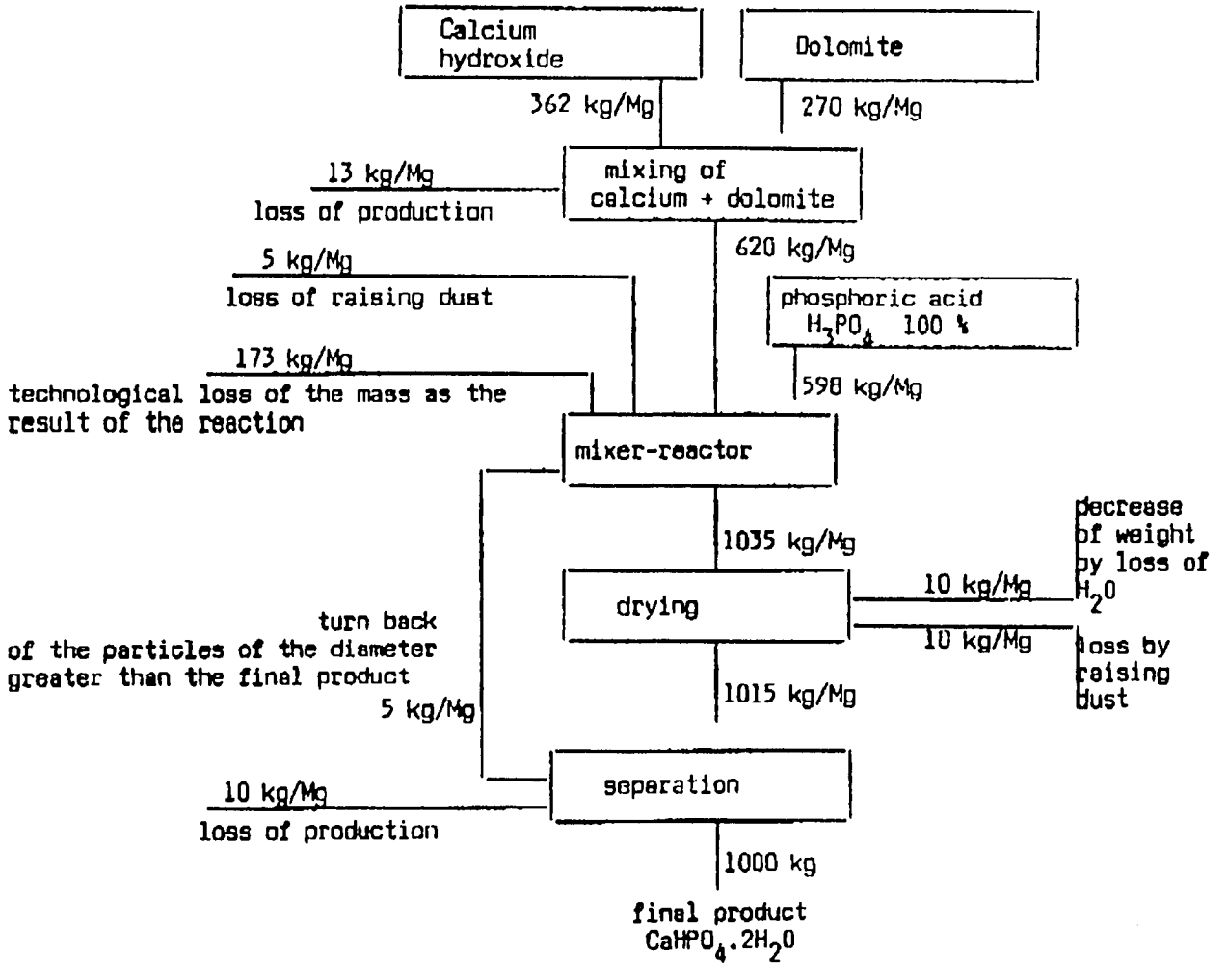

COMPARISON OF THE LOSS INDEX (kg/Mg product)

Type of the technology	Waste and loss								
	drying of apatite	mixing of 3-components	sintering	cooling separation	mixing of calcium hydroxide and dolomite	reactor	drying	separation	waste and loss together
1	2	3	4	5	6	7	8	9	10
Thermal method	24		34,5 (HF) 10	25					34,5 (HF) 59
Low temperature method equipment from thermal method					14	51	10	10	85
Low temperature method + new reactor					13	5	10	10	38

Aplication of new reactor in low temperature method :

will limit total index of loss by

will recover 44,9 kg of product in each Mg of product

Assuming the sale of 12.000 Mg of product at the price of 6.300.000 zł/Mg

the recovered product gives 3.394.440.000 zł of profit.

Invested 4 mld will return after 1,2 years.

Notice : the loss index has been estimated on the basis of the records of buying and selling.

65

COMPANY NAME: Boruta
LOCATION: Zgierz, Poland
DATE OF VISIT: November 8, 1994

MEETING ATTENDEES

Jerzy Jarecki	General Director
Piotr Kukula	Technical Director
Piotr Pietrzak	Environmental Protection Specialist

OVERVIEW

Boruta has made good progress in developing and implementing waste minimization projects in different sections of the plant. These projects focussed on reduction of wastewater discharges, water consumption, solid wastes and air emissions. Minimizing wastewater contaminants and discharges presents technological challenges due to the numerous (over 300) types of dyestuff and other products manufactured under widely varying batch process conditions. Details of these projects are presented in a report prepared by Boruta (Appendix E). Fifteen waste minimization projects have been identified which are in different stages of implementation.

In addition to the waste minimization projects, Boruta has planned to implement two other projects to control the discharge of wastes and protect the environment. An on-site landfill will be constructed for disposal of industrial solid wastes at a cost of approximately $350,000. Boruta is also funding approximately 50% of the cost (total cost is approximately $4.4M) of a joint municipal and industrial wastewater treatment plant located in the city of Zgierz.

In order to better manage production processes and be cost competitive, Boruta has installed a computerized production management and control system. This system has recently been installed and is in the process of being set up to customize with the operational conditions in the plant. In addition to cost control, the system has capabilities to process environmental data from the different plant operations.

PROJECT STATUS

Fifteen waste minimization projects were identified. Some of the simpler projects have been implemented, and others are in progress. Projects involved modifications of process technologies, reuse and recycling of process waters, and installation of emission control equipment. The goal was to reduce waste quantity and contaminant loadings. The major benefits of the projects were significant reduction in COD and heavy metals concentration in the

wastewater discharges and reduction in consumption of selected raw materials. As a result, significant reduction in environmental penalties have been achieved, and cost of raw materials usage minimized which together have lowered the cost of production allowing Boruta to be more cost competitive in the world market. Project details are presented in the attached report.

One of the problems being addressed is the high concentration of ammonia in waste discharges from the para-n process. Ammonia use in this process is not efficient and cannot be adequately controlled. Evaluation of the kinetics of the process is in progress in conjunction with the Technical University at Lodz. Special reactors operating under high pressure and temperature conditions are required for this process. The university is planning to obtain such equipment in order to conduct the process control investigations in laboratory simulated models.

EQUIPMENT REQUEST

After review of the process and environmental control needs, Boruta requested WEC to provide a COD analyzer. COD is the most representative parameter that would characterize the different process wastewaters generated in the plant. It would allow the plant's environmental staff to monitor the characteristics of the wastewaters flowing to the wastewater treatment plant from the different processes and take actions to control the waste loadings. Boruta submitted a request for this equipment including specifications and justification for the purchase of the equipment.

RECOMMENDATIONS

1. Boruta should input environmental process data into the computerized production management system to monitor and control the wastewater discharges and air emissions.

2. Results of waste minimization projects should be included in the computerized production management system in order to calculate the benefit of waste minimization actions on reduction of production costs.

3. Frequency and number of samples and analysis of different process waste streams should be increased and the analytical results should be used to control production processes.

ACTION ITEMS

1. Data should be collected and cost benefit analysis should be done to compare the actual performance of waste minimization projects with the estimated benefits.

2. Conduct a comprehensive evaluation of proposed waste minimization projects using the guidance manual in order to select projects with high return on investment and with significant benefit in environmental protection.

APPENDIX D

Zakłady Przemysłu Barwników

"Boruta" SA

For:

World Environment Center

November 1994

69

Information on the Measures Undertaken in Connection with Waste Reduction in Dyestuff Plant "Boruta" SA

Dyestuff Plant "Boruta" SA is currently realising tasks to reduce adverse affect of the company on the environment. Those measures are supervised by engineers-experts employed in production divisions, engineers-researchers working in the company's Research Laboratory, company's environmental protection staff and the employees of a special section for waste reduction. Many technical and technological changes have been elaborated and implemented lately. They have led to diminished amount of wastes and emission to natural environment. Results are presented on the charts below.

Chart 1.

Emission of gaseous-technolcgical pollution from "Boruta" SA.

Chart 1

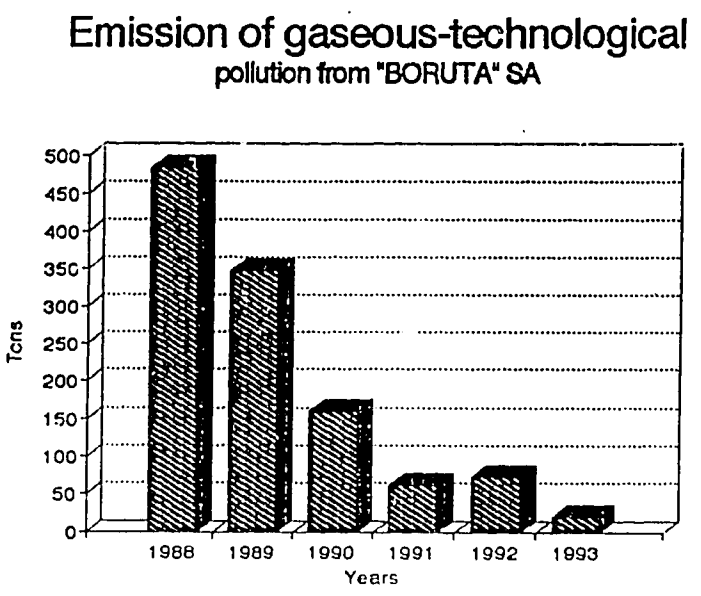

The chart shows that the action connected with the reduction of gaseous pollution from technological processes allowed us to reduce the amount of gas from 470 t./year in 1989 to ca. 25 t./year in 1993.

Chart 2, 3, 4.

- Waste water discharge from "Boruta" SA.
- COD load from "Boruta"SA.
- Discharge of soluble substances from "Boruta" SA.

Chart 2

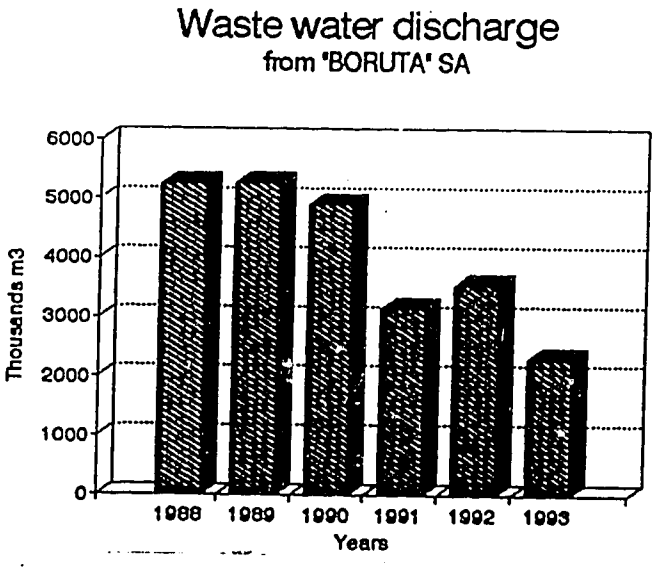

Chart 3

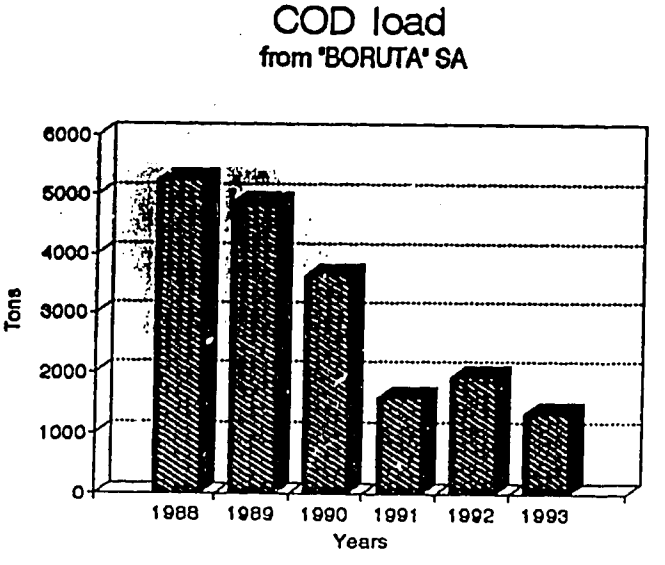

Chart 4

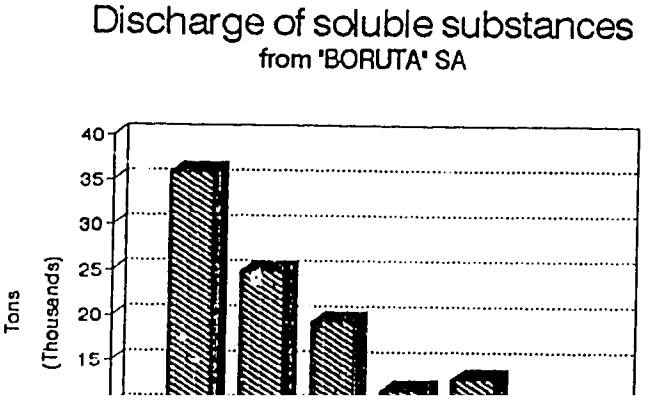

- 12'

The charts illustrate the result of reduction of waste water discharge and the contaminants it contains. The amount of waste water in 1993 constituted 50 p.c. of that in 1988-89. The load of contaminating substances expressed by the COD Indicator diminished from 5,200 t./year in 1988 to amount 1,400 t./year in 1993.

Chart 5.

Water consumption in "Boruta" SA.

Chart 5

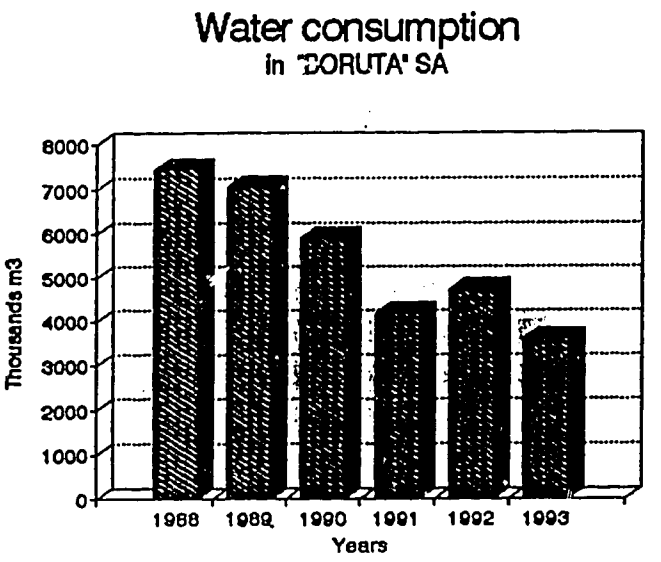

This chart illustrates the reduction in water consumption in the years 1988-1993. The result was achieved thanks to new technical-technological processes inplemented in the company. The importance of this result is demonstrated by the fact that the company used deep ground water which is more and more valuable.

Chart 6.

Amount of technological solid waste.

Chart 6

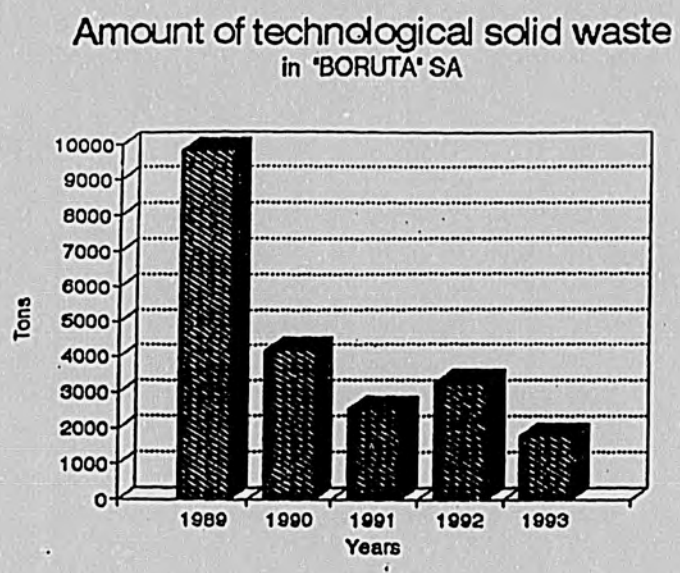

The decrease of solid wastes took place as a result of their ilization and shift towards no-waste technology. In 1989 there re 9,800 t. of solid wastes and in 1993 - 2,000 t.

Those achievements presented on the charts above required at intellectual and financial effort. Such impresive results e possible when some of the tasks mentioned below have been lised. The tasks about which we informed you in our letter of h July, 1994 are the following:

The application of no-waste water technologies for the duction of helaktyn dyes (result: ca. USD 4,800 a year).

Separation and utilization of sodium sulfate from the waste ver (result: USD 12,600 a year).

3 Utilization of waste chalk (result: USD 1,300 a year).

4 Change in the technology of the production of black (result: c. USD 4,580 a year).

74

Moreover , there have been elaborated other methods which are now being implemented, such as:

1. Reduction by ca. 1.4 t. of the discharge of ammonium ions to waste water (while obtaining 2-sulfo 4-nitroaniline).

2. Change in the technology of production of helaktyn navy blue1 has resulted in:
   - COD reduction in waste water by 130 kg/t. of dye
   - reduction of soluble substances by 710 kg/t. of dye.
3. Change in the technology of production of helaktyn navy blue2 has resulted in:
   - COD reduction in waste water by 180 kg/t. of dye
   - reduction of soluble substances by 380 kg/t. of dye.
4. Application of recycling of waste water in the production of FC acid instaed of brine used before.
5. Technology of production of the acid p-aminobenzenesulfonamide was modernized which caused:
   - reduction of contamination load in waste water the amount of:
     - 310 kg COD/t. of product
     - 260 kg of soluble substances/t. of product.
6. No-waste water technology was implemented in the production process of helaktyn black.
7. Production technology for helaktyn red was modernized which diminisched:
   - COD load by 93 kg/t. of product
   - soluble sobstances by 2,063 kg/t. of product.
8. New production technology was elaborated for 2-chloronitro--aniline which resulted in the reduction of COD load by 292 kg/t. of product and soluble substances by 4,100 kg/t. of product.
9. Iron oxides from Bechamp's reductions are fully utilized the amount of 600 - 1,000 t. yearly.
10. To reduce the emission of geseous SO_3 to atmosphere special equipment was installed in the Division WT-17 and a system of

unloading and dosing oleum was sealed in the Division of H-acid.

11. To reduce the discharge of heavy metals copper catalityc agents were replaced with ferrous onec.

12. To reduce SO_2 and H_2S emission, one more absorption level was introduced to absorption installation in the Division of Sulphur Dyestuff.

13. Technology of diazotization was changed by the application of equimolar amount of amine and sodium nitrite.

14. To reduce the emision of nitrogen oxides in nitration process, mixed acid (nitric acid+sulfuric acid) was replaced with concentrated nitric acid.

15. Partial recycling of waste water was applied at the production of 1,2,4,acid which allowed to diminisch the consumption or fresch sulfuric acid.

Besides those tasks is one project realized which influences the level of adverse affect of the plant on the environment. That project includes:

1. Construction of modern biological treatment plant for the company and the city of Zgierz. It started in 1993 and should be finished by 1996.
2. New, modern dumping ground for industrial waste, which meets even the most demanding conditions for environmental protection. It will be lined with HDPE film.

Despite such achievements in the minimalization of wastes and the realization of global projects such as waste water treatment plant and dumping ground, the company still works for minimalization of wastes in different technologies. The task we suggested for common realization with the WEC was the minimalization of ammonia emmision in the production process of p-n-aniline. In this production process we use about 12 times as much ammonia as is really needed. It causes considerable losses of this substance. We decided, together with the consultants,

76

that kinetics of this reaction should be examined as the reaction takes place at the pressure of 30 atm. We wanted to check the possibilities for diminishing of the amount of ammonia in the process. Unfortunately, it turned out that there is no appropriate equipment to conduct that study. In the Departament Of Environmental Protection at the Technical University of Łódź (where Marek Stelmachowski - a consultant is employed) the equipment for the measurement of the kinetics of reactions allows for working pressure 15 atm. This task has been suspended as the Department will soon have scaning calorimeter and titanium reactor-Parr's pressure reactor. They can make our studies possible. The second problem we suggested - connected with nitroaminephenol - must be postponed as at present there is no production of this type.

Except of the problems mentioned above researcg works are constantly going on in company's laboratories to reduce waste in production processes of separate products. To accelerate those works and give the possibility to evaluate the results in a more complex way we think we need a DR 2000 spectrophotometer (of HACH make) with auxiliary equipment (our letter of 27th July, 1994). This equipment allows us to evaluate the results of our efforts to diminish waste Quickly and easily. Having it we could also intensify proecological policy in the company and achieve further economic results.

Considering the above, the management of Dyestuff Plant "Boruta" SA suggests the need for financial means for the purchase of DR 2000 spectrophotometer of Hach make, according to the agreement on co-operation of 17.11.1993.

The specification for the equipment is as follows:

1. Spectrophotometer DR/2000 (cat.no. 44600-02)
2. Pour-thru-cell (cat.no. 45215-00)
3. COD Reactor (cat.no. 456-02)
4. Digesdahl Apparatus (cat.no. 23130-21)

5. Tests: cat.no. of test:

22422-00	12066-66	22426-00
23198-00	22425-00	14188-66
22427-00	22428-00	22577-00
1037-69	2301-66	854-99
22756-99	23750-00	22432-00
22433-00	14034-99	2219-66
21194-49	23766-26	23765-26
22437-00	21256-25	21259-25
24159-25	22443-00	12065-66

Total cost of the equipment at catalogue prices is about USD 7,300.

COMPANY NAME: Boryszew
LOCATION: Sochaszew, Poland
DATE OF VISIT: November 4, 1994

MEETING ATTENDEES

Czeslaw Lato	Vice President, Research & Development
Lukasz Sleczkowski	Director of Production
Irena Michalak	Manager, Research and Development
Dorota Prosniak	Manager, Technology & Environmental Protection Dept.
Marta Rosiak	Deputy Manager of Energy & Water Department
Teresa Brzozowska-Janiak	Process Engineering Specialist- Env. Protection Dept.
Ewa Sarbinska	Process Engineering Specialist- Env. Protection Dept.
Festas Ilove	Chemical Specialist, Research Dept.
Witold Prosniak	Process Engineering Specialist- Production Dept.A.
Wieslaw Chmielewski	Production Department A
Grazyna Kasprzycka	Consultant
Lech Sadowski	Consultant

OVERVIEW

Boryszew has made good progress in developing and implementing a waste minimization program in the plant. They identified two major waste minimization projects that are being implemented . The projects are: (1) Reduction of waste in the epoxidation of vegetable oils, and (2) Reduction of waste in the dibutyl maleate plant. Detailed report on these two projects have been prepared by Boryszew and submitted to WEC (Appendix F). Boryszew reported having obtained environmental and economical benefits from these projects . These benefits include a more cost-effective production system and reduction in penalties for waste discharges and disposal. In addition, seven waste source reduction and four other waste minimization projects were identified by Boryszew. These projects are being developed for evaluation as part of the ongoing waste minimization and pollution prevention activities in the plant. Regarding obtaining loans for environmental projects, Boryszew indicated that they are interested in repaying their existing loans to the government of Poland within a short period and establish the company as a self-sufficient and financially sound privately held company. They would like to minimize further financial liability at this time.

PROJECT STATUS

Two major waste minimization projects are currently being implemented. In developing these projects, the goal was to make the production process more cost-effective and reduce the quantity of wastes generated. Both of these goals appear to have been achieved and benefits are being obtained. Highlights of these projects are described below:

Waste Reduction in Epoxidation Plant

In the epoxidation process of vegetable oils, acetic acid was used as the oxygen carrier in the presence of hydrogen peroxide using sulfuric acid as a catalyst. This process resulted in high waste loading in the process wastewater particularly from the presence of acetic acid. To reduce waste loading, acetic acid was replaced with formic acid. This resulted in a more efficient production process, reduced the BOD and COD concentrations in the wastewater, and the wastewater was more amenable to biological treatment. As a result of this change in the process, COD loading from the epoxidation plant was reduced from approximately 30% to 20% in the total wastewater flow to the on-site wastewater treatment plant. The COD concentration in the treated wastewater discharge was reduced from approximately 400 mg/L to 200 mg/L, thus making it much easier to be in compliance with the effluent discharge standard of 180 mg/L of COD. Significant reduction in financial penalties for waste loading discharges were achieved. Higher product yield and lower cost of production was also achieved. It was noted that even though formic acid is being imported at a higher cost than locally available acetic acid, the overall economic and environmental benefit of the project outweighed the increased cost of the acid.

Waste Reduction in Dibutyl Maleate Plant

Production of dibutyl maleate (DBM) results in one of the major sources of organic contaminants. One of the main sources of contaminants is the esterification process in the production of DBM. Recycling is quite common in this manufacturing process. However, further steps are necessary to evaluate options that would minimize the quantity of wastes generated. Replacement of the sulfuric acid catalyst is being investigated. Studies have shown that accurate determination of the end point of the esterification process is critical to product quality and in determining the waste discharge of contaminants. Boryszew reported that a flash point test is a reliable indicator of the degree of esterification achieved at any given time. They do not have this automatic test equipment.

Other Projects

In addition to the above two projects, seven other waste source reduction projects have been identified. These projects are being developed for implementation in the near future. The projects are as follows:

1. Elimination of wastewater in the DBM plant through recycling.

2. Reuse of process wastewater for neutralization.

3. Optimization of the neutralization process.

4. Recovery of organic solids after distillation.

5. Replacement of the catalyst.

6. Improvement of the phase separation after distillation to recover more product.

7. Develop a more efficient cooling system.

EQUIPMENT REQUEST

Boryszew submitted a request with justification for the Flash Point Test equipment. Discussions were held regarding the need for the Flash Point Tester or a COD analyzer to best meet the needs of the waste minimization projects. WEC indicated that a stronger justification would be required for obtaining the Flash Point Test equipment. Boryszew will prepare a revised request for equipment to include alternatives of the Flash Point Test equipment and a COD analyzer.

RECOMMENDATIONS

1. Continue with the current investigations on waste reduction and process changes in the DBM plant.

2. Perform laboratory scale testing, as much as possible of new ideas on process changes to cause waste reduction.

3. Prepare information on waste minimization program at Boryszew to prepare the final report on this project.

ACTION ITEMS

BORYSZEW

1. Boryszew to submit a revised equipment request to WEC.

WEC

1. WEC to conduct literature search on catalysts for the esterification process in dibutyl maleate production and forward to Boryszew.

APPENDIX E

Fax Nr (02) 625 0476

Prosimy o dostarczenie tych materiałów Panu dr. Laszkiewiczowi z World Environme Center w Nowym Jorku (...) trzech Amerykanów (P. Laszkiewicz, P. Da... P. Feder)

BORYSZEW S.A
96-500 Sochaczew, ul. 15 Sierpnia 106
tel. (828) 222-01, tlx 886091
fax (828) 220-96
ident. 750010992

WASTE MINIMIZATION PROJECT REPORT

Within the scope of cooperation between "Boryszew" Chemical and Plastics Company in Sochaczew, Poland, and World Environment Center in New York (WEC), two projects concerning two different installations and production lines have been realized; epoxidized vegetable oils and dibutyl maleate. This report describes the steps taken to realize the two waste minimization projects. In our opinion, both of them are projects of reducing wastes "at the source", i.e. in production processes.

Besides, there have been carried out some organization changes profitable to environmental protection (setting up the Technology and Environmental Protection Department, for example) and has been established a quite considerable reward (around 400 US$) for those of our workers whose achievements in the environmental area will be proved the best in our Company in 1994.

I. REDUCTION OF WASTE LOAD IN PROCESS WATERS ORIGINATING FROM THE EPOXIDIZED VEGETABLE OIL (SOYA AND RAPE SEEDS) PLANT

1. Description of the project and nature of the problem

Epoxidation reaction of unsaturated chemical bonds in refined edible oils (soya and rape seeds) in our factory is carried out with the help of concentrated water solution of hydrogen peroxide 50 % by weight in the presence of sulfuric acid as a catalyst, and by using acetic acid (CH_3COOH) as an oxygen carrier. In the reaction environment, peracetic acid (CH_3COOOH), which transfers the oxygen molecules to the oil, is formed "in situ" from acetic acid and oxygen originating from hydrogen peroxide.

After the technological change according to the waste minimization project, this same role is played by formic and performic acid ($HCOOH$ and $HCOOOH$).

The production process of epoxidized soya or rape seed oil consists of the following basic phases:

a) loading the raw materials,

b) epoxidization reaction which takes place with controlled dosing of oxidation agent, completed by holding at a constant temperature,

c) separation oil phase (product) from water phase which is the main source of pollutant, i.e. acetic acid, in this production process,

d) washing the oil and phase separation,

e) distilling off water residue.

2. Project goal

The production technology of epoxidized vegetable oils using acetic acid as an oxygen carrier was developed by the Institute of Chemical Industry in Warsaw more than twenty years ago and has been used in our factory for the same period of time. We are the sole producer of that kind of additives in Poland.

The goal of the project was to find a technological solution, for the same existing production installation, which could reduce or eliminate the functioning technological disturbances appearing in the general sewage treatment plant in our Company, and especially its biological section, during the epoxidized oil production. It has meant the aim to reduce the wastes originating from this production line.

3.Method of solving the problem

Earlier basic research results showed that changing the oxygen carrier by replacing hardly biodegradable acetic acid with easily degradable formic acid give the success. Further process optimization in the laboratory and production trials confirmed not only achieving the set goal but in addition resulted in economizing water and considerable improvement of work safety.

As a result of the oxygen carrier change, the amount (volume) of water required for product washing (point 1d) is reduced by a half to obtain final product of th same quality.

Safety improvement results from the fact that there is explosion hazard in the production installation and in the case of acetic acid use technology there is apolied a more reactive and dangerous mixture of hydrogen peroxide with sulfuric acid during epoxidation reaction (point 1b) than formic acid alone in case of the new alternative technology.

We would like to point out that, cheap acetic acid is produced in Poland, while formic acid is not only more expensive but it has to be imported. Before the social-economic reforms in Poland this presented a real obstacle and together with formal less importance of environmental problems caused that research in that direction was discouraged.

II. REDUCTION OF WASTE LOAD IN PROCESS WATERS ORIGINATING FROM THE DIBUTYL MALEATE PLANT

1. Description of the project and nature of the problem

Production of dibutyl maleate is one of the mayor sources of pollutants in "Boryszew" SA. Although lower in ranking than in the case of epoxidized vegetable oils, the above has proved a harder problem to solve due to the complexity and diversity of the technological operations which are source of pollution.

In dibutyl maleate production process, recycling is widely used (see annex flow diagram) and systematic laboratory tests (the chromatographic, among others) of the composition of the wastewaters are performed.

One of the main sources of pollution in the process is estrification reaction that has to be carried out in the presence of excess of one of the reactants (n-butanol) and whose reaction path can affect the amount of side-products. To reduce the side-products initially, the process was devided into two steps - monoestrification and estrification. Within the scope of cooperation with the World Environment Center further extensive laboratory research has been / is being carried out on the process; among others the reaction kinetics, and especially the moment when estrification is being completed, as well as research for another catalyst.

So far, no catalyst has been found which has substancial advantages in relation to the presently used sulfuric acid.

The results of the above mentioned research have shown, among others, that accurate determination of "the end" of estrification reaction has profound effect on the final product as well as the amount of pollutants (mainly side-products). In the process production, it will be very helpful to determine not only the acid number parameter applied presently but also flash point of dibutyl maleate crude (after evaporation of volatile substances, i.e.water and butanol) as an operation analysis.

Distillation process does not follow estrification directly but there are neutralization and washing operations between them in a commercial scale in our Company. All the process phases depend on course of estrification to a high degree.

The distillation operation consisting in evaporating of volatile substances residue is carried out, by a vacuum method, in a bubble-cap plate column, where hot ester (dibutyl maleate) circulates in counter-current to superheated steam which flows from the column bottom. The measure of termination of distillation is the result of the flash point test, which is the base analysis in the dibutyl maleate process production, and the final product as well as quantity of process waters are dependent on rapidity and accuracy of determination of flash point parameter.

Besides , an idea of our workers team and then the adequate production trials showed that there is the possibility to avoid the use of superheated steam in the distillation operation and to apply the light blowing through the plate column by mean of compressed air from our multi-plant network of that gas.

2. Project goal

The goal of the project was to find technological solutions which could reduce or eliminate pollutants originating from the dibutyl maleate production process. During our researc work there has been accepted the assumption that the goa has to be achieve by "step by step" method, withou high-cost investment within the time limits at the presen stage.Two parts of low-cost project concerning estrificatio and distillation process stages have been chosen and ou efforts have been focused on these problems.

3. Method of solving the problem

According to the above described problems within ou cooperation with the World Environment Center we realize th technological changes in the dibutyl maleate plant, a follows:

* Change of admissible value acid number which is achieving a the end" of estrification, from not bigger than 5 mgKOH/g t not bigger than 2 mgKOH/g .
  This change will keep side - product to a minimum and limi the product deterioration.
  Adeguate admissible values of the ester crude flash poin will be established after purchase of the automati equipment, according to needs.

* Change of the distillation method from the method with the help of superheated steam to the method with the help c light blowing of compressed air.

* Purchase of automatic equipment of flash point determinatio
  The automatic flash point analysis implementation instea of the manual method used at present will be a ver important technical improvement of process production.
  It will cause various kinds of savings and advantages,

Economical analysis of the waste minimization projects

1. concerning epoxidized rape seeds oil production

Cost production analysis for 1994 year based on epoxidized rape seed oil produc

900 tonnes/year - annual production
23124 zł/US$ - rate of exchange

No.	Raw materials and fees & penalties	Value of produced epoxidized rape seeds oil counted over to acetic acid use		counted over to formic acid u.	
		zł millions	US $.	zł millions	US
1.	Rape seed oil	16776	725500	17064	737
2.	Hydrogen peroxide	4689	202700	5034	217
3.	Acetic acid	1394	60300	—	
4	Formic acid	—	—	1195	51
5.	Sulfuric acid	108	4700	108	47
6.	Soda lye	131	5700	104	45
7.	Water	32	1400	16	7
9.	Fees and penalties	7073	305700	3322	143
	Sum of 1÷7	23130	1000,300	23521	1017
	Total sum	30203	1306000	26843	116
	Difference (Savings)			+3360	+145

Research costs amount to around zł 200 000 01

US$ 8650

Calculation of Return of investment (ROI):
(but there are no investment costs)

3360 - 1680 %

2. concerning dibutyl maleate production

The balance sheet of savings resulted from the waste minimization project for 1994 year

1000 tonnes / year - annual production
23124 zł / US $ - rate of exchange

Savings source	Annual savings	
	zł / year	US $ / year
Production Increase	738.000.000	31914
Raw material savings	110.000000	4756
Steam energy	24950000	1079
Electric energy	570 000	25
Water	2960 000	128
Manpower	7750 000	335
Fees	246470 000	10658
Penalties	46740.000	2021
Total savings	1177440000	50916

Equipment purchase (for flash point analyses) US $ 15000
Duty and tax around 40 % + Printer 6000

Both the costs US $ 21000

Research costs $ 2500

Total costs $ 23500

Return of Investment (ROI)

$$\frac{50315}{23500} = 214\ \%$$

The block process diagram

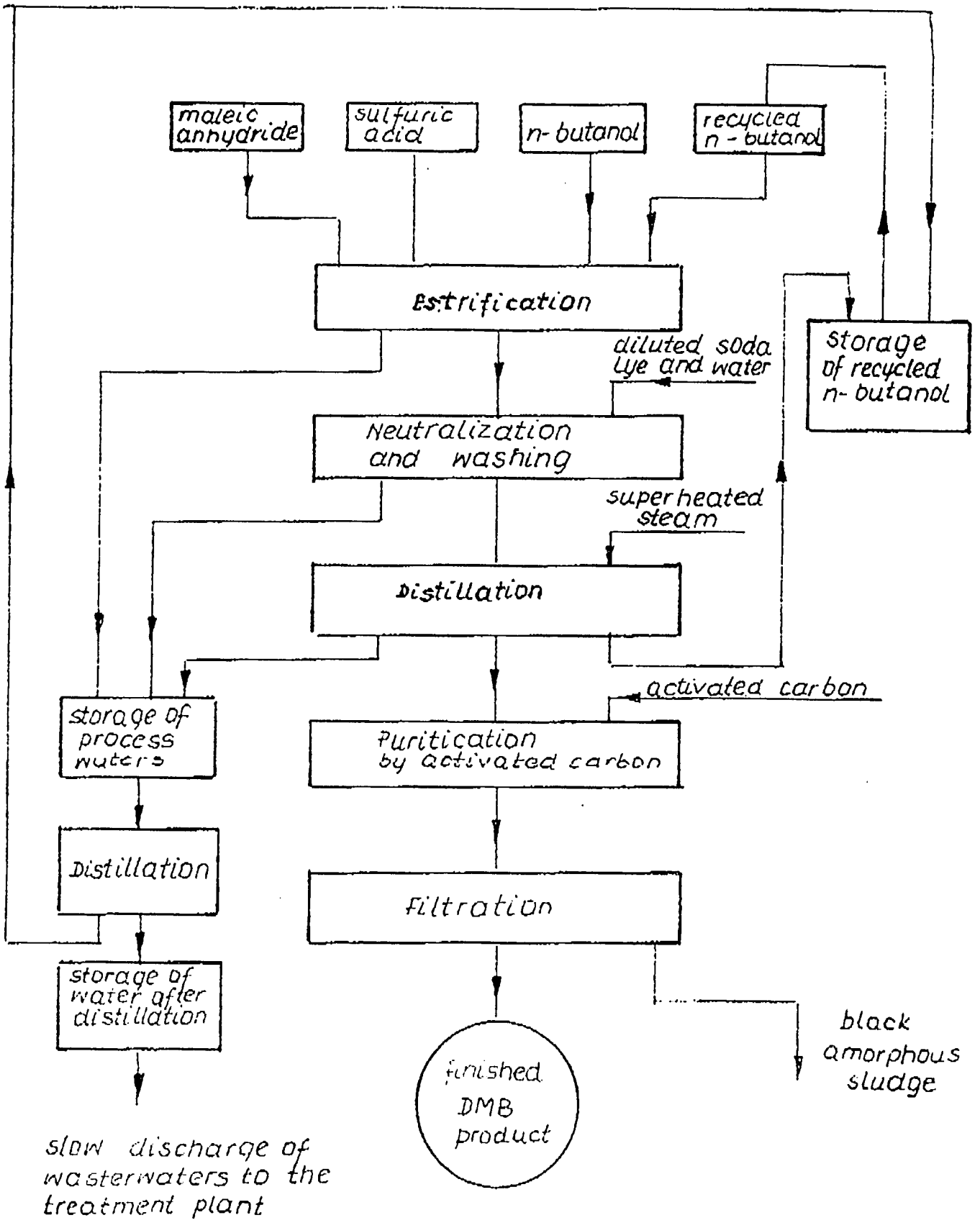

Besides , an idea of our workers team and then the adequate production trials showed that there is the possibility to avoi the use of superheated steam in the distillation operation and to apply the light blowing through the plate column by mea of compressed air from our multi-plant network of that gas.

2. Project goal

The goal of the project was to find technological solution which could reduce or eliminate pollutants originating fro the dibutyl maleate production process. During our resear work there has been accepted the assumption that the go has to be achieve by "step by step" method, witho high-cost investment within the time limits at the prese stage.Two parts of low-cost project concerning estrificati and distillation process stages have been chosen and o efforts have been focused on these problems.

3. Method of solving the problem

According to the above described problems within o cooperation with the World Environment Center we realize t technological changes in the dibutyl maleate plant, a follows:

* Change of admissible value acid number which is achieving a the end" of estrification, from not bigger than 5 mgKOH/g t not bigger than 2 mgKOH/g .
This change will keep side - product to a minimum and limi the product deterioration.
Adeguate admissible values of the ester crude flash poin will be established after purchase of the automati equipment, according to needs.

* Change of the distillation method from the method with the help of superheated steam to the method with the help o light blowing of compressed air.

* Purchase of automatic equipment of flash point determinatio
The automatic flash point analysis implementation instea of the manual method used at present will be a ver important technical improvement of process production.
It will cause various kinds of savings and advantages,

Mr. G. Laszkiewicz
World Environment Center
in New York

Forum Hotel in Warsaw
Fax Nr. (02) 625 0476

Dear Mr. Laszkiewicz

By reason of traffic jams at morning hours in Warsaw we ask you kindly to leave for our Company („Boryszew" in Sochaczew) at 7.15 hour on Friday morning.

Yours sincerely

Zakłady Chemiczne i Tworzyw Sztucznych
BORYSZEW S.A.
96-500 Sochaczew, ul. 15 Sierpnia 106
tel./0494/ 222-01, tlx 886091, fax. /0494/ 220-96
ident. 750010992

V-ce PREZES
mgr inż. Czesław Lato
A-2

COMPANY NAME: Kedzierzyn
LOCATION: Kedzierzyn-Kozle, Poland
DATE OF VISIT: November 8, 1994

MEETING ATTENDEES

Jozef Sebesta	Managing Director
Zbigniew Szopa	Production Director
Zbigniew T. Slezak	Chief Engineer of Development
Anna Golab	Chief of Environmental Department
Iowana Marawiec	Environmental Department
Jerzy Frankowski	Chief of Production

OVERVIEW

Kedzierzyn is one of the three largest chemical companies in Poland. The company is government owned, although efforts are in progress to privatize the company. The two major business areas are: (1) nitrogenous fertilizers (urea formaldehyde), and technical grade gases, and (2) organic chemicals (oxyalcohol). The company's business is growing and the company is making positive efforts to be in a strong position both in Poland and in worldwide markets. To achieve this business goal, Kedzierzyn is planning to meet ISO 9000 standards for their products. Plans are also being developed to include a Total Quality Management practice in the company. Gross sales of $250M are expected in 1994. The company's management is committed to implementing a successful waste minimization program and to meet the pollution control standards specified by the government regulatory agency.

Kedzierzyn has made significant progress in implementing a number of waste minimization projects. A total of 16 projects are planned to be implemented by year end 1994 (Appendix F). The estimated total cost of implementing these projects is approximately $100,000. The benefits are estimated to be $400,000. In addition to these projects, the Waste Minimization Committee solicited proposals for waste minimization from plant workers with an incentive to reward the best three proposals with monetary prizes (lst prize $3000, 2nd prize $1500, 3rd prize $500). Out of the 30 proposals received, 15 projects were selected for further evaluation.

While the company is making good progress in implementing several waste minimization projects, attention needs to be more focused on how these projects are related to an overall companywide waste minimization policy and goals and objectives. In order to maintain the current momentum and continue to be successful in future, a waste minimization policy and long-term plan with milestones for monitoring progress needs to be established.

PROJECT STATUS

Kedzierzyn has identified 16 waste minimization projects to be implemented by year end 1994 (Appendix G). The progress on the projects are satisfactory and on schedule. During discussions on these projects with plant personnel, additional suggestions were made on the following projects:

Project # 4: It was suggested that the phthalic anhydride be recovered instead of disposal by burning as currently practiced. The phthalic anhydride could be collected in an uninsulated vessel such as a tank truck, thus converting it to a powder or granular form under ambient temperature conditions. The recovered material can be reused as raw material in the process.

Project # 10: In the Water Demineralization Plant, it was suggested that the plant regeneration water discharge be controlled by monitoring the conductivity. The discharge can be terminated when the specified conductivity is reached instead of operating the discharge on a conservative 8 hour timed cycle . Thus considerable water discharge can be minimized resulting in cost savings in operating cost and fees for water discharge.

Project # 14: It was suggested that inquiries be made to find a chemical product that would inhibit polymerization of the formaldehyde. If polymerization can be avoided, the formaldehyde can be reused instead of being wasted as currently practiced. Thus cost savings can be obtained both in operating cost and in waste disposal fees.

Other Project: In the Nitro-chalk plant, it was suggested that ammonia dosage and mixing conditions be optimized. Currently, due to lack of suitable process and mixing control, ammonia is added in large slugs to maintain an excess of ammonia in the reactor. Thus large quantities of ammonia are being used and also significant quantities of unused ammonia are wasted. It was suggested that a static mixer be installed in the ammonia feed line which will ensure more efficient mixing and optimized dosage. Cost savings in operating cost and in waste discharge fees will be obtained. Kedzierzyn will submit information on the flow, Ph, titration curve for the ammonia use, and ammonia mix ratio in the process. WEC will inquire if a microprocessor is available to optimize and control the ammonia dosage in the process.

EQUIPMENT REQUEST

Kedzierzyn requested a syngas combustion analyzer for which specifications were submitted to WEC. WEC will obtain price quotations for this equipment and submit to Kedzierzyn for their review. In addition, a polarograph was also requested. In the DNT-TDA reduction process, plant personnel indicated that they are currently unable to analyze for nitrogen compounds other than in DNT. WEC requested that the plant provide information on the critical process control parameters in the DNT-TDA reduction process including the name of the catalyst used. Based on this information, WEC will evaluate the needs for a polarograph equipment being requested from WEC.

RECOMMENDATIONS

1. Company management, along with the Waste Minimization Committee should prepare a waste minimization policy, long-term goals and objectives and milestones to monitor progress of the waste minimization program.

2. Kedzierzyn should review the additional suggestions in making process and control changes and estimate cost savings.

3. Kedzierzyn should consider utilizing outside consultants in developing and evaluating waste minimization projects. If necessary, confidentiality agreements should be prepared as needed.

ACTION ITEMS

KEDZIERZYN

1. Submit details of the ammonia mixing process in the Nitro-chalk plant.

2. Submit information on the DNT-TDA reduction process as discussed.

WEC

1. WEC will review the information on the ammonia mixing process and inquire if a suitable microprocessor is available to more efficiently control the process.

2. WEC will review the information on the TNT-TDA reduction process and evaluate the justification for purchasing a polarograph being requested from WEC.

APPENDIX F

Zaklady Azotowe "KEDZIERZYN" S.A.

Kedzierzyn-Kozle, October 1994.

Specification of projects accepted to be implemented within the cooperation with WEC

Pos.	Specification	Authors	Expected outlay mln PLZ	Expected effects mln PLZ	Notes
1	Reduction of volume of waste water disposed and emissions of toluylenediamine (TDA) by tightening catalyst preparation and catalyst separation equipment	W.Bulanda, T.Dabrowski, A.Pyrz, T.Zomerfeld	about 600	about 270	Implementation of this project has been suspended till signing a contract with Chemical Works in Bydgoszcz on continuing the TDA production.
2	Reduction of butanols emissions (n-butanol and iso-butanol) to atmosphere from storage tanks	B.Gaca	0	about 7	Under implementation.
3	Replacement of heating medium in the venting system of phthalic anhydride refining units	J.Szajna	about 46	about 500	To be implemented in November 1994.
4	Modification of the venting system in liquid phthalic anhydride storage and road tanker filling unit	J.Szajna, Z.Boruk	about 12	about 40	To be implemented in November 1994.
5	Reduction of ammonia consumption for the production of urea through reduced emissions	W.Nowak, M.Gnoinski	about 350	about 3600	Project has been implemented.
6	Application of carbon monoxide analyzers to control combustion process in boilers	H.Nawrot, A.Golonka, S.Szewczyk	about 300	about 290	Because of high price of analyzers suggested by WEC, we search for alternative instruments.
7	Elimination of methane fraction blow-off to atmosphere from the argon plant during	A.Gora	about 10	about 280	Project has been implemented.

Pos.	Specification	Authors	Expected outlay mln PLZ	Expected effects mln PLZ	Notes
	shutdown of syn-gas preparation unit for oxo synthesis				
8	Reduction of methanol and formaldehyde emissions from the formalin plant	B.Szczepaniak, Z.Fryczek, T.Kelm	about 130	about 250	Under implementation. Requires additional observation during start-ups to come.
9	Utilization of wastes from phthalic anhydride refining unit - PA II Plant	J.Szajna, Z.Boruk	about 20	about 20	To be implemented in November 1994.
10	Rationalization of ion exchanger regeneration for water demineralization process	E.Slugocki	about 150	about 167	Implementation has been suspended due to problems with salinometers (4 times higher costs are expected).
11	Reduction of exhaust gas volume from H102 and H103 heaters through optimization of combustion process	L.Grochowski, J.Skorski, E.Sutor, J.Zowade	about 500	about 300	Analyzer type has been selected. Waiting for procurement.
12	Reduction of waste water volume through partial utilization of condensate from CO2 cooler (E-210) of the Benfild plant	R.Sitek	about 40	about 240	Project has been implemented.
13	Elimination of discharging condensate to waste water and of reaction gases to atmosphere. Utilization of degasifier for E-16 gas heaters of the low-pressure partial decomposition (semi-combustion) plant	R.Sitek	about 50	about 32	Under implementation.
14	Recovery of formalin from polymer from storage tanks.	B.Szczepaniak, Z.Fryczek, T.Kelm, A.Korcz, H.Ferneza, E.Fruga	about 60	about 1855	Under implementation. Piping is ready and polymer solvation in V-2 began.

Pos.	Specification	Authors	Expected outlay mln PLZ	Expected effects mln PLZ	Notes
15	Complete utilization of condensates from the adhesives plant	B.Szczepaniak	about 180	about 900	Under implementation. Adhesives II plant has finished its part. Adhesives IB plant is to finish before November 30, 1994.
16	Elimination of waste stream from Halberg type solution pumps A-6-1	W.Nowak, M.Gnoinski	about 600	about 4500	Project has been implemented.
T O T A L			about 5166	about 13251	

COMPANY NAME: Polchem
LOCATION: Torun, Poland
DATE OF VISIT: November 7, 1994

MEETING ATTENDEES

W. Hopke	General Director
J. Ciemielewski	Technical Director
M. Bratkowski	Manager
M. Mackowski	Investment Manager
S. Oborski	Environmental Manager
J. Ziolkowski	Production Manager
W. Wojciechowski	Consultant, Biprochem
W. Zajaczkowski	Consultant, Biprochem

OVERVIEW

Polchem has made good progress in implementing a plantwide waste minimization program. In addition to the major project for chlorosulfonic acid production, three other waste minimization projects were identified. Total savings from these projects are approximately $28,000 per year in operating cost. In implementing these projects, Polchem has obtained significant benefits in more cost-effective production methods, reduced cost of raw materials, and reduced financial penalties for waste discharges. Currently construction of the new full scale chlorosulfonic acid plant is in progress and is scheduled to be in production by December 31, 1994. Details of these projects are described in a report prepared by Polchem (Appendix H).

PROJECT STATUS

A total of four waste minimization projects were identified as follows: (1) Waste reduction in chlorosulfonic acid production, (2) Reduction of water use in water softening plant, (3) Reduction of water use in lime milk preparation, and (4) Sludge reuse in neutralization process. In developing these projects, Polchem's goal was to reduce wastes generated and develop more efficient production processes. These goals have been achieved in the projects. Highlights of the projects are described below:

Waste Reduction in Chlorosulfonic Acid (CSA) Production

This is a major waste minimization project at Polchem. Current production method of CSA is inefficient and generates 3 MT of waste sulfuric acid per 1 MT of CSA. Polchem and their consultants Biprochem have developed a modified process that eliminates waste sulfuric acid . A pilot plant of 1 MT/hr was designed and operated for three months to evaluate the new process. Difficulties were encountered with corrosion and elevated temperature conditions. Special materials were selected to be corrosion resistant. A flow control system for CSA is required that is corrosion resistant. Polchem has requested this equipment from WEC. The

pilot testing is completed and a full scale system is currently being constructed.

Reduction of Water Use in Water Softening Plant

Decarbonized water is used for boiler feed to the KS-12 boiler. A quartz sand reactor ("Virbos") is used for decarbonation of raw water which uses 41 m^3/h of raw water and 600 l/h of lime milk. Out of a total of 41 m^3/h of decarbonized water produced, 13.3 m^3/h is used as boiler feed water. The remaining 27.7 cu.m^3/h flow was being used as make up water in the cooling water system. To minimize the use of raw water in the decarbonation process, Polchem has modified the system to recirculate a portion of the decarbonized water back into the Virbos reactor. Thus raw water use has been reduced by approximately 200,000 m^3/year resulting in a savings of approximately $1800 per year in operating cost.

Reduction of Water Use in Lime Milk Production

Preparation of lime milk for neutralization of liquid wastes was carried out using raw water. Polchem has modified the system to use a portion of the liquid wastes for the lime milk preparation. This reuse of liquid wastes reduced the use of raw water for make up.Thus cost savings of approximately $10,000 per year has been achieved in the cost of raw water purchase.

Sludge Reuse in Neutralization Process

Neutralization of liquid wastes was carried out using lime milk. Generally excess lime is used in the neutralization process. The neutralized liquid wastes is transported to a sedimentation tank and the treated liquid is discharged after pH adjustment to meet discharge standards. The sludge is disposed. Polchem is now recirculating the sludge for neutralization since it contains excess unused lime. Thus the quantity of sludge disposed has been significantly reduced. Cost savings include reduction in fresh lime use, reduced sludge disposal cost, and reduced penalties for waste discharge. The total cost savings is approximately $3500 per year.

EQUIPMENT REQUEST

Polchem submitted a request to WEC for flow control equipment for the new CSA plant. This equipment requires high acidic corrosion resistant materials of construction which is not available in Poland. The equipment is important for control of the CSA production process and to ensure that waste sulfuric acid is not generated.

RECOMMENDATIONS

1. Prepare a report on the new CSA plant including details of economic and environmental benefits. The report should be prepared per the standard guidelines (Appendix A).

2. Monitor performance of each of the waste minimization projects to determine how closely the actual benefits compare with the projected benefits.

3. Prepare information on waste minimization projects to be included in the Project Summary Report brochure.

ACTION ITEMS

POLCHEM

1. Submit a report on the new CSA plant to WEC.

WEC

1. Review request and specifications for flow control equipment for the CSA plant with equipment suppliers and send information on availability and price.

APPENDIX G

TORUŃSKIE ZAKŁADY PRZEMYSŁU NIEORGANICZNEGO
„POLCHEM"

ODZNACZONE ORDEREM SZTANDARU PRACY I KL.

87-111 TORUŃ 12, Szosa Bydgoska 94/106

Skrytka pocztowa nr 51
Adres telegr.: Polchem-Toruń
Stacja toryl.: Toruń-Północny, bocznica wiosna
Przesyłki drobnicowe: Toruń-Wschód
Rachunki bankowe: NBP
Oddział Toruń, nr 87027-55

94 JUL 14 AM 9:03

WORLD ENVIRONMENT CENTER
New York, fax (212) 683-4745
Mr Thomas A. Pluta

Data listu W | Wasz znak | Nasz znak | Toruń, dn. Toruń. July. 8, 1994

W sprawie: Waste Minimalization Report

With reference to our formerly agreed progress steps we enclose 3 subject topics (projects) for minimalization of wastes.

Decrease of Fresh Water Used in the Water Softening Installation feeding the KS-13 Boiler

Actual state

The reactor "Virbos" is the basic device in the water decarbonization section. Generally "Virbos" must be fed with at least 41 m^3/h of fresh (untreated) water along with 600 l/h of lime milk. This reactor contains about 300 kg of contact mass (quartz sand) upon which sedimentation is growing due to removal of carbonate hardness. During normal use this mass has been partly let out and made up with new quartz sand.

Reaction time in the "Virbos" reactor is constant and it lasts for about 27 min. Decarbonized water amounting to 13.3 m^3/h is directed to the thermoelectric section. The remaining water (27.7 m^3/h) is used for making up the circulation water lot. Partly this water is used for cooling air compressors.

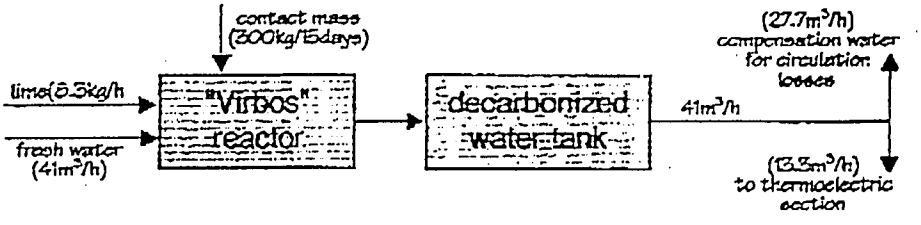

PRODUKUJĄ:

kwas siarkowy
- akumulatorowy
- odczynnikowy
- specjalny
- techniczny

kwas fluorowodorowy

kwas chlorosulfonowy

pirosiarczyn sodowy

siarczyn sodowy do celów fotograficznych

siarczyn amonowy gat. specjalny

siarczan sodowy
- odczynnikowy
- farmaceutyczny

fluorek sodowy

podsiarczyn sodowy

superfosfat

inne sole i kwasy nieorganiczne

Proposed solution

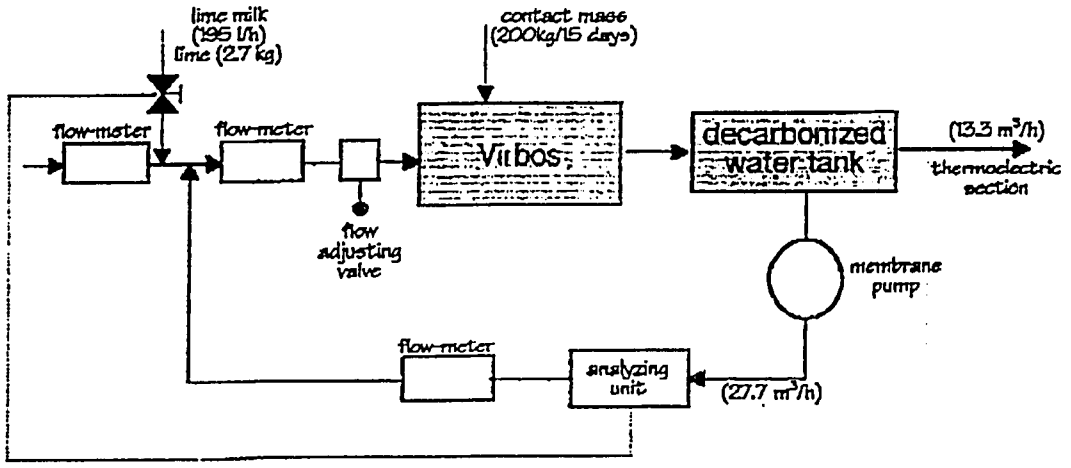

For implementation of this project the following devices, equipment and fittings will be indispensable:

1) Analyzing unit ensuring constant alcalinity at required level, namely 2P<M, where P=temporary hardness, M=carbonate hardness, to be combined with an automatic analyzer feeding (controlling) lime milk (the signal from the analyzer belated by the reaction time in the "Virbos" (i.e.27 min).
2) 3 Flow-meters.
3) Flow-adjusting valve (local control).
4) Membrane type pump fed with compressed air.

Expected advantages

1) Saving of fresh water

   27.7 m³/h * 7 200 h = 199 440 m³/year * 1 500 zł = 299 160 000 zł/year = 12 465 USD/year.

2) Belittled demand for lime

   (8.3 kg/h - 2.7 kg/h) * 7 200 h = 40.32 Mg/year * 1 mil. zł/Mg = 40 300 000 zł/year = 1 679 USD/year.

3) Belittled demand for quartz sand

   200 kg/month * 12 months = 2.4 Mg sand * 1 mil.zł/Mg = 2.4 mil.zł = 100 USD/year.

Total 14 244 USD/year.

4) Penalty savings

104

Use of liquid wastes for preparation of lime milk

Actual state

For preparation of the lime milk used for liquid wastes neutralization fresh (untreated) water is used (about 45 500 m^3/year).

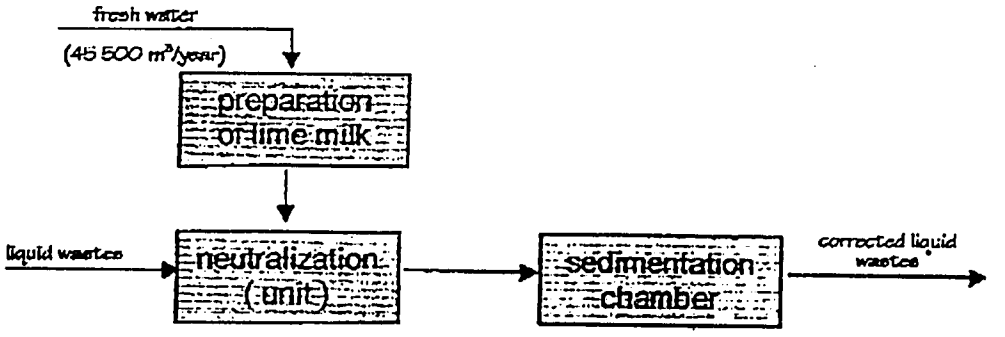

Proposed solution (project)

Instead of using fresh (untraed) water for preparation of lime milk up till now meant for the liquid wastes, now neutralization liquid wastes requiring no pH correction would be employed.

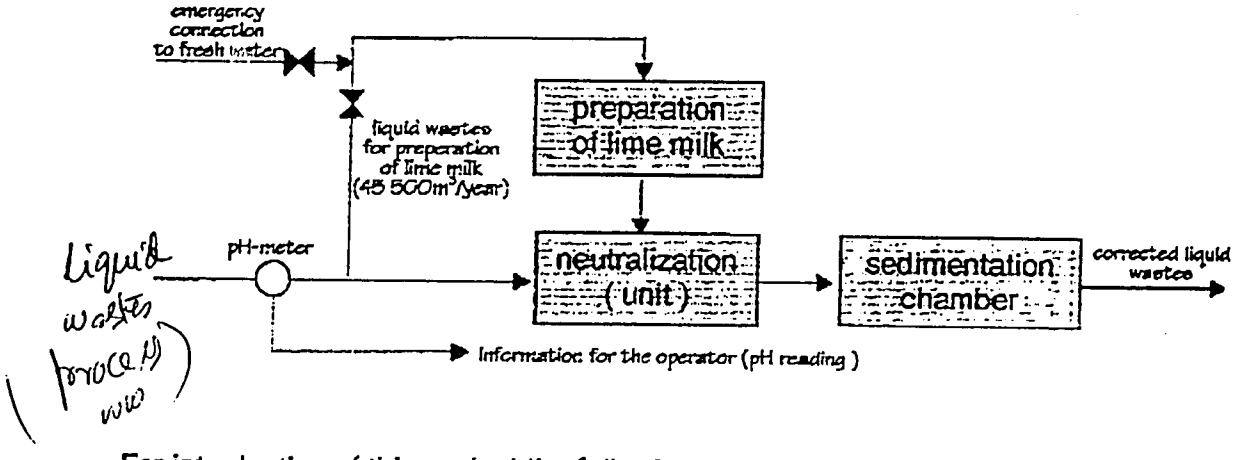

For introduction of this project the following devices and fittings

1. pH-meter with recorder: to indicate pH value of flowing in liquid wastes
2. Membrane type pump (fed with compressed air) for pumping of liquid wastes for the section meant for preparation of lime milk by (supplier):

   SAND PIPER PUMPS

   BY WARREN RUPP. INC,

   MANSFIELD, OHIO, USA

Expected adventages

1) No Need to use fresh water, app. 45 500 m^3/year i.e. 9 479 USD/year.

105

Utilization of Postneutralization Sludge in the Process of Liquid Wastes Neutralization (Recycling)

Actual state

Liquid wastes from the production installations are directed to the mechanical chemical neutrizer where pH correction takes place.

To control this reaction chamber lime milk is added. Liquid wastes enter the sedimentation chambers where final sedimentation tekes place. The sludge is virtually a refuse periodically removed.

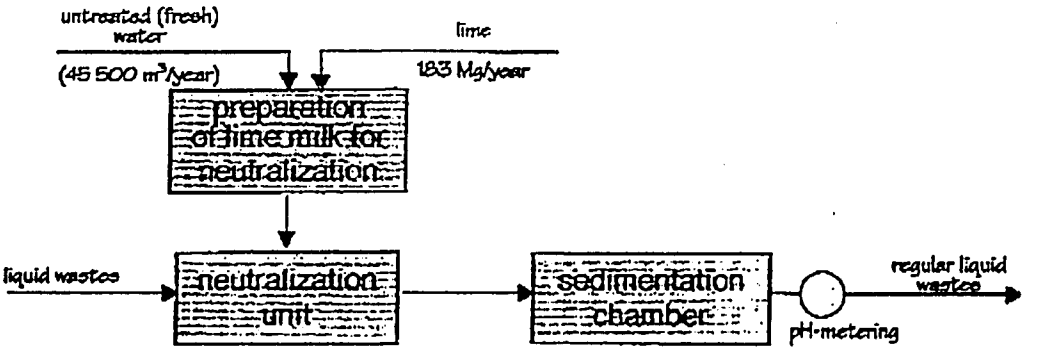

Proposed solution (project)

It is intended to return the sludge from the sedimentation chamber for repeated neutralization because the excess lime quantity (not involved in reaction) varies from 30 to 60% (for reasons of short reacting period and lack of automatic control). Thanks to the intended project the refuse would be completely eliminated.

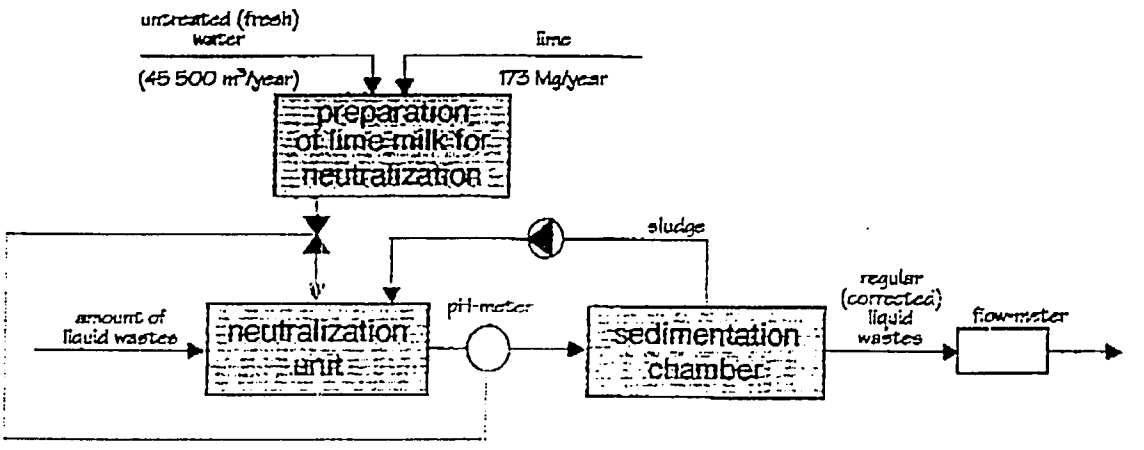

106

For implementation of the above project the following devices (apparatii) and fittings are wanted.

1) pH-meter provided with recorder and combined with an automatic valve to control feeding lime milk to the neutralization unit.

2) liquid wastes flow-meter (here we propose use of the device made by):

ISCO INC. ENVIROMENTAL DIVISION
531 WESTGATE BLVD
LINCOLN NE 68528-1586, USA

Expected advantages

1) Due to refuse elimination: 204 Mg/year = 74 000 000 zł i.e. 3 100 USD/year

2) Less lime to be used: 10 Mg/year = 10 000 000 zł i.e. 417 USD/year

3) Penalty savings Totaly: 3 517 USD/year

Z-ca DYREKTORA
d/s Technicznych
mgr Jan Ciemielewski

COMPANY NAME: Polfa
LOCATION: Warsaw, Poland
DATE OF VISIT: November 3, 1994

MEETING ATTENDEES

Karyna Walkowska	Chief Specialist, Environmental Protection
Marek Ostaszewski	Ryfamycin Plant Group
Piotr Gornicki	Ryfamycin Plant Group
Marek Skorka	Butyl Acetate Recovery Group
Krystna Rogalska	Butyl Acetate Recovery Group
Kazimierz Dziegielevski	Deputy Director, Research & Development
Ewa Kumanowska	Consultant
Michal Kasprzycki	Consultant

OVERVIEW

Polfa is currently implementing several waste minimization projects during the annual overhaul and maintenance shutdown of some of the manufacturing process areas. These projects are briefly summarized later in this report and described in detail in the report prepared by Polfa (Appendix I. The cost of these projects range approximately from $2000 to $40,000. In some instances, such as chloroform emissions, projected benefits include emission reduction by approximately 50%, from 20 MT/m to 10 MT/m. The major focus of the waste minimization projects are on the following issues: (1) reduction of solvent vapor emission losses during transfer of solvents in antibiotic production, and (2) improvement of butyl acetate recovery and minimizing losses in storage, extraction and distillation processes. Changes implemented include modification of solvent transfer methods such as use of submersible and other pumps instead of vacuum pumps to minimize vapor losses, replacement of old leaking pipelines, improved instrumentation, new insulation, and overhauling and upgrading the process equipment as necessary. Polfa is interested in monitoring emission losses of organic vapor throughout the plant in an effort to reduce the overall fugitive emissions from the manufacturing facility.

Plans are underway to upgrade the process operations and increase the production capacity of the penicillin manufacturing section of the plant to triple the present capacity by January 1996. Currently design engineering is in progress. Polfa is considering waste minimization options in the design of the upgraded facility. A phased approach to upgrade the facility is planned. Total cost of upgrading will be approximately $15M to $20M.

PROJECT STATUS

Polfa identified two waste minimization projects currently being implemented as follows: (1) minimizing solvent emission losses in antibiotic production, and (2) improvement of butyl acetate recovery. These projects are being implemented at this time taking advantage of the annual plant maintenance shutdown. The plant is projected to be back in operation by December 1, 1994.

Minimizing Solvent Emission Losses

Control of solvent emission losses have been undertaken in several process areas. Actions taken to reduce the losses are as follows: (1) replacement of vacuum pumps with centrifugal and submersible pumps to transfer solvents from storage drums and between process units, (2) operating certain processes under vacuum and condensing the vapors to capture solvent losses, (3) replacement of rusted, and leaking pipes, (4) replacement of piping insulation, (5) replacement of electrical and instrumentation systems with automatic controls. These methods are used to reduce loss of solvents in "mother liquor" and other process streams. Typical solvents used are propanol, tetrahydrofurans, ethyl acetate, chloroform and others. Emission losses are projected to be reduced up to 50%.

Improvement of Butyl Acetate Recovery

Approximately 100 MT/month of butyl acetate is produced at Polfa. Estimated losses are 30 MT/month. Butyl acetate is relatively expensive ($0.60/kg). These losses can occur in storage, extraction, and distillation process units. One of the major difficulties in developing an accurate material mass balance for butyl acetate processes is the lack of reliable and accurate butyl acetate flow and concentration measurement equipment. Consequently, it is difficult to identify the sources and quantify butyl acetate losses. Polfa has attempted to measure the flow using "make-shift" devices but have not been very successful. To reduce vapor losses, condenser temperatures have been lowered below -15 C but results in increased operating cost. Loss of butyl acetate impacts not only cost of product loss but also in increased penalties due to higher contaminant loading in wastewater discharge. Investigations are ongoing to reduce the loss of butyl acetate.

Another problem in the butyl acetate recovery process is the consumption of caustic soda used to prevent protein fouling of the heat exchanger and distillation columns. Caustic soda consumption has been reduced by 50% to 100 g. caustic per kg. of butyl acetate by several actions including recycling, organized production and minor operating changes.

Other Projects

WEC inquired whether steam consumption and losses are evaluated for the different process units. Polfa indicated that this information is not routinely monitored. WEC recommended that a steam mass balance should be developed to determine usage and reduce losses.

Polfa mentioned that they are evaluating alternatives for treatment of process wastewater. This issue will be more critical with the increase in penicillin production in the near future. Polfa is interested in information regarding treatment of wastewater from similar pharmaceutical industry processes.

EQUIPMENT REQUEST

Discussions were held regarding appropriate equipment to be provided by WEC for Polfa's waste minimization projects. Choices were an organic vapor analyzer (OVA) to monitor organic emissions and flow meters for measurement of butyl acetate recovery processes. Polfa requested the OVA and submitted a price quote and specifications from a U.S. supplier. WEC required a justification from Polfa to support the request for equipment. Polfa agreed to submit the request for equipment with justification to WEC .

RECOMMENDATIONS

1. Evaluate the butyl acetate recovery process using flow meters and sample analysis to accurately determine sources and quantity of losses.

2. Monitor the solvent emissions in the process units where modifications have been made recently to determine the benefit of the waste minimization actions taken.

3. Collect information on the steam usage in the plant and quantify use and losses in the different sections of the plant. A closed loop steam system should be considered in the design of the proposed upgraded penicillin manufacturing plant.

ACTION ITEMS

POLFA

1. Submit equipment request to WEC .

2. Prepare information requested by WEC for preparing the summary report on waste minimization projects at Polfa.

WEC

1. Review and comment on the information on an OVA submitted by Polfa.

APPENDIX H

PRZEKAZANIE TELEFAXU TELEFAX TRANSMISSION

BIURO PROJEKTÓW
PRZEMYSŁU FARMACEUTYCZNEGO „Polfa"

00-926 WARSZAWA 63,
UL. ŻURAWIA 6/12

TEL.628-87-38 TELEFAX628 87 49 TELEX 825281

TELEFAX No. 464 DATA 2.11.94r W-wa STRON/PAGES 3

DO/TO GEORGE LASZKIEWICZ TELEFAX 625-04-7(
„ HOTEL FORUM

OD/FROM TEL

Warsaw, 2.11.1994 yr.

WEC World Environment Center
George Laszkiewicz
Project Manager
Technical Programs

HOTEL " FORUM " Warszawa

REPORT GROUP No 6.

1. KARYNA WAŁKUWSKA M.Sc.
2. MAREK OSTASZEWSKI M.Sc.
3. MICHAŁ KASPRZYCKI M.Sc.
4. EWA KUMANOWSKA M.Sc.

The trials of Butyl Acetate elimination from Spent aqueous are investigated in October 1994.

The trials are operated by two methods:

1) denaturation of proteins by method of pH regulation; centrifugation of suspension, whereafter - air blow through clear spent aqueous,
2) denaturation of proteins by method of pH regulation; air blow through; whereafter centrifugation.

To check up on possibility of Butyl Acetate elimination from spent aqueous to air stream and solvent vapour adsorption on Bonopore adsorbent was our aim.

The Chemical Oxygen Demand measurement was taken as efficiency index.

The result of trials indicated the low effectiveness of this

denaturation of proteins by method of pH regulation; filtration and distillation. Financial analysis of this method (made before) showed the profitableness of this method.

In modernization work of penicillin production, we utilize the result of trials - the precipitation of proteins is operated on place of their formation i.e. in extraction stage (in accordance with idea "source reduction").

Part II: Report of Work in Ryfamycyny "S" production process according to Waste Minimization Program.

1. Change of the transport method of chloroform-water suspension - impeller pump instead of vacuum.

   Realized:
   - pipage collector
   - end to connect product cistern with pipage collector
   - work place for pump
   - impeller pump system

   Remaider:
   - impeller pump with motor assembly and connect to a power source.

2. Change of the transport method of TBA from drum - pump instead of vacuum.

   Realized:
   - "Lutz" submersible pump for drum was purchased
   - "Nofena" glandless pump for drum was purchased
   - replace pump to transfer TBA from storage tank to reactor
   - "Nofena: pump is connected with compressed air system and the automatic control system is made

   Remaider:
   - modernize the transport line from drums to storage tank;
   - carry out the wiring system to connect Lutz pump to a power source
   - carry out the work place to store Lutz pump

3. Modernization of cooling glycol distribution

   Realized:
   - replace the corroded pipeline for glycol trasport (central and distribution)
   - glycol connection to receivers of vacuum distillation assemblies are carried out
   - replace the old cut - off valve on indoors main line and on whole distribution line to each apparatus
   - jackets connector pipe are cleaned

113

- the control system repair is carried out
- cold insulation for indoors main line and on whole distribution line to each apparatus is done

4. **The repair of hollow insulator on receiver, apparatus and condenser**

Realized:

- cold insulation is repaired and decrement are supplied on receiver, apparatus and condenser.

5. **Change of the receive method of spent crystallization liquor and wash from self-discharging centrifuge - impeller pump instead of vacuum.**

Realized:

- three glandless pumps NOVITTERM type and three explosion proof motors was purchased
- three contactor for automatic control pump run was purchased
- carried out the wiring system to connect pumps to a power source

Remaider:

- modernize the transport line for spent liquor from centrifuge
- pump assembly and connection to a power source.

Total costs connected with a.m. repair and modernized works are valued at 1 059 555 000 zł (≈ 45,500 US $)

With kind regards !

COMPANY NAME: Viscoplast
LOCATION: Wroclaw, Poland
DATE OF VISIT: November 2, 1994

MEETING ATTENDEES

Adam Nowotarski	President of the Board
Zbigniew Jarzebowski	Technical Director
Wojiech Zyzak	Head of Plasters Department
Jan Wnuk	Chief Specialist Technology
Anna Zagroda	Chief, Technology Laboratory
Barbara Szydlowska	Manager, Adhesives
Tadeusz Lawrynowicz	Chief, Environmental Department
Jerzy Strychalski	Chief Maintenance Department
Wieslaw Gawel	Adhesives Department
Ryszard Jasinski	Energy Specialist
Pawel Jamecki	Marketing Manager(translator)
Andrzej Doniec	Consultant, Lodz University
Jerzy Rouba	Consultant

OVERVIEW

Strong management leadership continues to advance waste minimization activities at a steady pace, especially in the areas of publicity and community outreach. Viscoplast has initiated steps and expects to be removed from the list of the worst polluting companies in Poland.

Financial management strengths include project financing, e.g. loans from commercial banks, the Polish EkoFund and the European Bank for Reconstruction and Development. Long range outlooks include the Total Quality Management training which is in progress and a trade and technical cooperation program with the 3 M Company. Management intends to integrate the work of production and technology programs in the plant to provide a broader perspective to employees and develop better teamwork. The Waste Minimization Committee has been expanded to include economic and maintenance representatives. A cost allocation system to charge costs back to the source is being developed.

A restructuring of the plant is also in progress as a result of the shutdown of the viscose rayon fiber production facility due to economics, environmental problems, and high energy consumption. A major energy audit is underway as a consequence.

Additional emphasis is needed in the areas of project identification and development; technical data gathering and assessment; sharing waste minimization successes with employees; and use of local consultants. A brief description of the waste minimization program is presented in Appendix J.

117

PROJECT STATUS

Solvent Recovery From the Carbon Adsorber Unit

Viscoplast has identified the more complete recovery of solvents from the coating operation as its waste minimization project (Appendix I). While the company has completed several steps to reduce emissions, it has not broken the project into discrete, achievable elements to realize the goal. Measures taken to date include the repair of valves, sealing of leaks, repair of gas cooling equipment. Prior to the purchase of the multichannel hydrocarbon analyzer, it was agreed that additional information regarding adsorption/desorption efficiency should be obtained. A sampling protocol was developed and sent to Viscoplast. The company intends to purchase a portable total hydrocarbon analyzer to sample adsorber emissions and identify possible improvements.

Leak Detection and Repair

Viscoplast has ordered benzene detectors to detect fugitive hydrocarbon leaks to identify and repair leaks.

EQUIPMENT REQUEST

1. A portable total hydrocarbon analyzer will be purchased by Viscoplast. Based on the results of the sampling program, the need for a continuous multichannel hydrocarbon analyzer will be re-evaluated.

2. Specifications for benzene/water interface detectors will be sent to Viscoplast. These units can be installed in the solvent regenerating unit to assist the operator in separating this mixture and reducing discharges to the sewer.

RECOMMENDATIONS

1. Develop more specific waste minimization goals and a list of projects to meet the goals.

2. Expand the use of "brainstorming" to identify problems, causes and solutions.

3. Prepare and distribute waste minimization "successes" to employees through the use of notices and posters in the plant area.

ACTION ITEMS

A. VISCOPLAST

PROJECT DESCRIPTION/EQUIPMENT JUSTIFICATION

1. Review projects description formats.

2. Prepare project description of completed process changes and benefits, e.g. additional coolers, condensers, valve repairs, sealing of leaks.

3. Prepare revised equipment justifications for continuous hydrocarbon analyzer.

CARBON ADSORPTION UNIT

1. Purchase portable total hydrocarbon analyzer and complete sampling plan to collect data on adsorption and desorption phases.

2. Conduct laboratory analysis of carbon efficiency.

3. Contact carbon suppliers to get technical assistance in analyzing efficiency, regeneration and replacement cycles, best carbon type.

4. Contact carbon supplier regarding package unit to replace existing unit.

5. Review design of sparging unit to improve inlet gas stream distribution.

6. Brainstorm possible causes and solutions to variable steam supply to adsorber.

7. Evaluate benzene/water interface detector specifications.

COATING LINE OPERATION

1. Review operating parameters (temperature, airflow, etc.) to determine effect on adsorber efficiency.

2. Brainstorm other waste minimization alternatives, e.g. improved cleanup procedures and container reuse.

WASTE MINIMIZATION PLANNING & ORGANIZATION

1. Prepare and publicize more specific goals and objectives.
2. Prepare and distribute regular progress reports to employees.
3. Submit a copy of the project list to WEC.
4. Submit a summary of project financing terms and conditions.

B. WEC

1. Send benzene/water interface detector specifications to Viscoplast.

117

APPENDIX I

Dr Jerzy Rouba
WMIP for Chemical Industry
in Poland

Lodz, 20th Nov. 1994

Dr George Laszkiewicz

WEC, NY, USA

The report No 3 on progress in waste minimization in Chemical Plant "Viscoplast", Wrocław, Poland

This report covers my last two trips to the Company in October and November 1994.

I have still discussed with Mr Zyzak the problems of solvent circulation at the Plaster Dept. Finally, we agreed, that to close the circulation of solvent and getting accurate and reliable data in this matter required:

1. to install a flowmeter to measure the amounts of solvent piped from the underground store tank to the Plaster Dept.,

2. to install a flowmeter to measure the flows of exhausted gases leaving the coating machine,

3. to detect and prevent any fugitive emissions of solvent from equipment and pipelines (glue tanks, condensers, decanters, etc),

4. to improve safety and health conditions for workers and simultaneously to decrease the losses of solvent at the decanter by introducing automatic device for interface level measurement and separation,

5. to decrease the temperature of solvent in the condenser by putting the second (idle) cooler into service,

6. to avoid any spills and leaves in emptied drums, containers, etc, as well as to improve equipment cleaning-up procedures,

7. to clear-up the problem of capsaicini in the solvent - whether it is interfering in recycling or not,

8. to reconsider all parameters concerned with operation of carbon adsorbers. I advised them to contact with Polish Branch of Swingtherm Company.

The amounts of solvent in air emissions has been estimated as 200 tonnes/year and solid wastes as 70 tonnes/year at the Plaster Department.

In November 1994 I have participated in general meeting at the Company with the WEC representatives and consultants, therefore I do not need report the problems which had been discussed there.

Apart from above considerations and steps which should be taken to improve the solvent recycling system, much more attention ought to be paid to the source of pollution. That means, the Company must first of all focus on **reformulation and process modification.** In my opinion, we still made little work on these items which should have the highest priority according to the cleaner production principles.

With best regards

dr Jerzy Rouba

APPENDIX J

WEC - Poland Waste Minimization Project Forms
Instructions

Company Description

1) Please give as much information as possible about the organization of the company's environmental affairs staff.

2) In describing reduction projects completed prior to the WEC projects, please give as much information as possible of the type requested on the rest of the forms. If you like, you can fill out the project forms with these additional projects. Please include the year the project was completed.

Project Description

1) Please list all of the company's products impacted by the waste minimization project. Some products upstream or downstream from the projects may also have been impacted.

2) Simple flow diagrams are most appropriate; block symbols for pieces of equipment or "black boxes" for processes are fine as long as they are properly identified.

3) The process description should include as many operating parameters as necessary to describe the operation.

4) The project description should include any equipment installed or any changes in operating parameters or procedures.

Project Description Worksheet

1) The waste minimization techniques listed in (2) are the standard ones as defined by U.S. EPA and INFORM. Chemical substitution is replacement of the chemical with a non-hazardous substitute. Substitution with other hazardous chemicals can be noted, but the substitute chemical should be listed. Equipment changes are pieces of equipment added to or removed from the process (or modifications to equipment). Operational changes are changes in the way materials are handled: housekeeping measures, operator training, etc. Product changes are changes in product formulation to avoid the use of hazardous chemicals. Process changes are modifications to the process itself, not simply additions of equipment. Adding a recovery unit would be a process modification, as would changing from open to closed loop recovery.

2) Capital costs for implementation include any costs incurred with the project that would not have otherwise been encountered, either in the process, or upstream or downstream. These include consultant fees, extra maintenance or operators, etc.

WEC - Poland Waste Minimization Project Description
Please Complete for Each Project

Company Name:

Date completed:

Company Representative and Title:

Waste Minimization Project Title:

Product(s) impacted by Waste Minimization Project:

Process Description:
(Please attach a flow diagram)

Description of Waste Minimization Project:

WEC - Poland Waste Minimization Project Description Worksheet
Please Complete for Each Project

Company Name:

Date completed:

Company Representative and Title:

1. Waste Minimization Project Title			
2. Waste Minimization Technique* (circle all that apply)	CH EQ OP PR PS Other (describe)		
3. Chemical(s) or Energy Units Effected (use additional sheet if necessary) Role and form of chemical in production process: G = gas, L = liquid, S = solid (circle all that apply)	Chemical Name Raw material G L S Product G L S Waste G L S	Chemical Name Raw material G L S Product G L S Waste G L S	Energy Units (check all that apply) Electricity ☐ Steam ☐ Coal ☐ Natural Gas ☐ Other (describe) ☐
4. Quantity of constituent reduced (a) Amount reduced annually as waste			
(b) Amount of waste reduced per unit of production			
(c) Amount reduced annually as raw material or energy			
(d) Amount of raw material or energy reduced per unit of production			
5. (a) Percent reduction of waste generated			
(b) Percent reduction of raw material or energy used			
6. Capital costs for implementation (U.S. dollars)			
7. Dollars saved (annually)			
8. Did the product or process yield change due to the activity? (If yes, please give percent change and indicate direction)	% Increased Decreased	% Increased Decreased	
9. How was the minimization project first identified?			

* CH = chemical substitution, EQ = equipment change, OP = operational change, PR = product change, PS = process change

WEC - Poland Waste Minimization Project Company Description
Please Complete for Each Company

Company Name:

Date completed:

Company Representative and Title:

In what year was the company founded?

What product(s) does the company produce?

Does the company export products outside Poland?
(If yes, please list the top three export nations)

How many employees does the company have?

What are the company's annual earnings (in dollars)?

In what year did the company first have an environmental division or employees working on environmental affairs?

Does the company have a separate environmental division, or are employees at all levels of staff and management involved in environmental affairs for their divisions?

Please describe the kinds of environmental training given to employees not directly involved in environmental affairs.

Please give a brief history of environmental activities at the company, including any waste minimization projects completed prior to WEC projects (use additional pages if necessary)

WEC - Poland Waste Minimization Project Description
Please Complete for Each Project

Company Name: *Kedzierzyn Nitrogen Works S.A.*

Date completed:

Company Representative and Title:

Waste Minimization Project Title:
Reduction of Butanol Emissions from Storage Tanks

Product(s) Impacted by Waste Minimization Project: *n-Butanol, Isobutanol*

Process Description:
(Please attach a flow diagram)
For safety reasons, storage tanks for n-butanol and isobutanol are operated under slight positive gage pressure of nitrogen blanketing. The current nitrogen cushion pressure is controlled as shown in Figure A. The pressure control system maintains the overpressure inside the storage tanks at the level of 0.5 kPa. When the pressure drops below that set point, the PV "A" valve is activated to open while the PV "B" remains closed. After exceeding the set pressure, the PV "B" valve is opened to let nitrogen (saturated with butanol) out to the atmosphere. The PV "A" valve remains closed during this operation. Average emissions of butanol amounts to approximately 1.2 kg/hr, or 3 tonnes/year.

Description of Waste Minimization Project:
In order to reduce the emissions, the pressure control system needs modification. Two separate control loops, each activating a single control valve, will be used to replace the single-loop system (see Figure B). The PIC "A" system will contol the inlet nitrogen and its set point should be adjusted to the minimum allowable pressure inside the tanks (0.5 kPa). The PIC "B" system will control the outlet nitrogen and its set point should be adjusted to the maximum allowable pressure just below the safety valve limit (2.0 kPa). This will nearly eliminate any emissions of butanol. If one tank is empty, it can play the role of a buffer taking up nitrogen from the tank being filled. It is important that the initial pressure in the empty tanks tanks correspond to the control system set point (0.5 kPa) or slightly below.

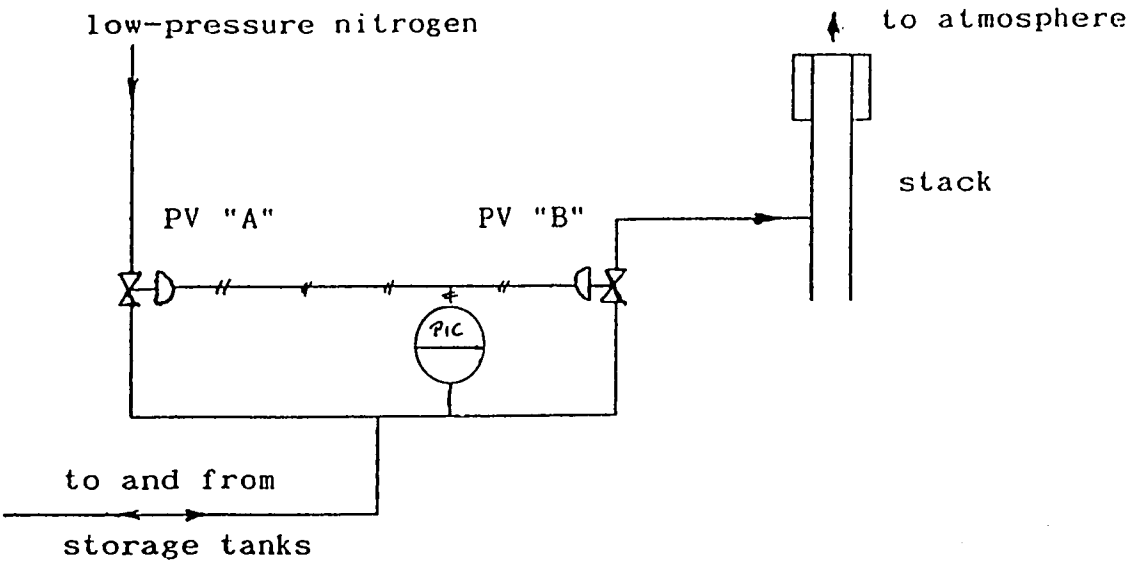

Process Diagram A: Current Process

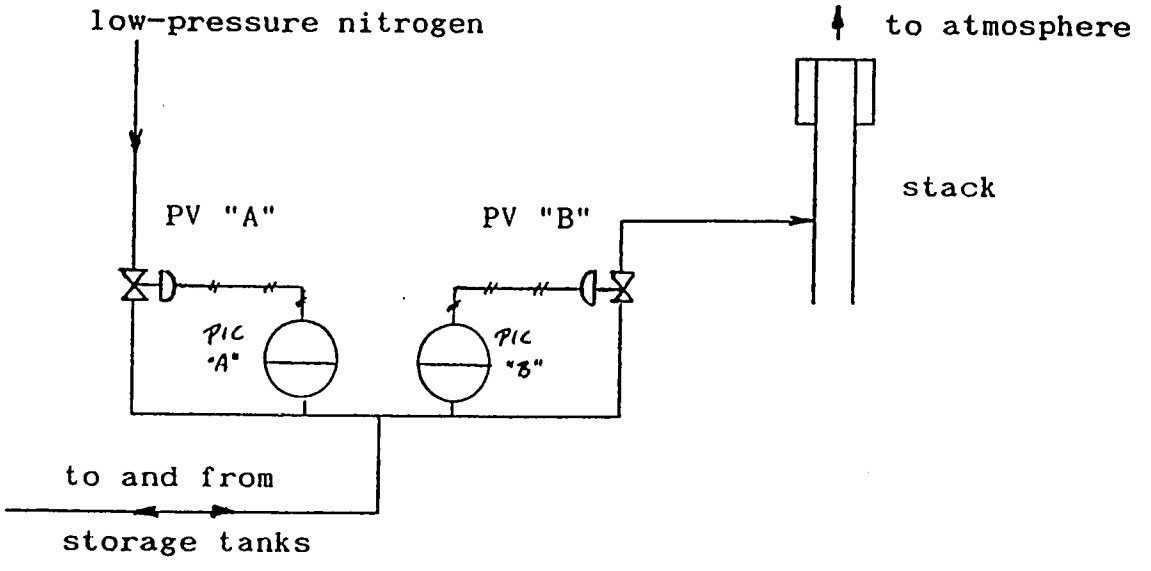

Process Diagram B: Proposed Process

WEC - Poland Waste Minimization Project Description Worksheet
Please Complete for Each Project

Company Name: *Kedzierzyn Nitrogen Works S.A.*

Date completed:

Company Representative and Title:

1. Waste Minimization Project Title	*Reduction of Butanol Emissions from Storage Tanks*		
2. Waste Minimization Technique* (circle all that apply)	CH (EQ) OP PR PS Other (describe)		
3. Chemical(s) or Energy Units Effected (use additional sheet if necessary) Role and form of chemical in production process: G = gas, L = liquid, S = solid (circle all that apply)	Chemical Name *n-Butanol* *Isobutanol* Raw material G L S Product G L S Waste (G) L S	Chemical Name Raw material G L S Product G L S Waste G L S	Energy Units (check all that apply) Electricity ☐ Steam ☐ Coal ☐ Natural Gas ☐ Other (describe) ☐
4. Quantity of constituent reduced (a) Amount reduced annually as waste	*3 tonnes/year*		
(b) Amount of waste reduced per unit of production	*unknown*		
(c) Amount reduced annually as raw material or energy	*n/a*		
(d) Amount of raw material or energy reduced per unit of production	*n/a*		
5. (a) Percent reduction of waste generated	*100%*		
(b) Percent reduction of raw material or energy used	*n/a*		
6. Capital costs for implementation (U.S. dollars)	*None - equipment already exists on site.*		
7. Dollars saved (annually)	*3000 kg/yr x 0.5 $/kg* *= $1,500/year* *(not including any penalties)*		
8. Did the product or process yield change due to the activity? (If yes, please give percent change and indicate direction)	*unknown* % (Increased) Decreased	% Increased Decreased	
9. How was the minimization project first identified?	*Suggestion from project manager.*		

* CH = chemical substitution, EQ = equipment change, OP = operational change, PR = product change, PS = process change

128

WASTE MINIMIZATION PROGRAM

Brief progress report

Planning and organization

Top Management suport May 1994
Intention Letter to Workers
from General Director

Organizning Waste Minimization Commitment
May 1994

DefineThe Firm Policy In Domain Of A Waste Source
Minimalization June 1994

Organizing program task force July 1994

Training Februar Technical Director -
Apriel leaders
July - task force
October - workers

Assesment phase

Identifing and prioritizing waste streams July 1994
brainstorm session

Generating options July 1994
Short time: betterment recycling
to realize in future
change solvent in technology glue produce,
make modern Works Energetics

Reviewdata and inspect site - housekeeping
August 1994
review installation to recycling
benzin;
review technology recycling ben
(problem kapsaicini and
aromatic compound)
balance sources of waste
from firm and Plaster
Department

Feasibility Analysis Phase

Technical evaluation — August - September '94

range and harmonogramy reparation
installation to recycling;
range measurement installation;
estimate possibilities work the installation
in a winter
estimate possibilities specific energetic
parameters

Economic evaluation — September 1994

put together largenesses
necessary to estimate expenses:
energetic, working power, renovationes,
make balance expenses and profits

Final report — October 1994

elaboration and ratify to realize

Implementation

Installation (equipment) — September 1994

set in numerators of technological steam

Implementation (procedure) — September 1994

repair steams bolts
washering installation;
repair radiotor gases
repair second srubbe
still monitoring recycling process
with mass - balance
order investigation in Chemical Institute
in University on contents kapsaicini and
aromatic compound in recycling benzin

Employee involvement

Information of the Waste Minimization Program

publication Intention Letter General Director
articles in works bulletin
information to local press

Competition for Idea Project of a Waste Minimalization

Training employees from Plaster Department

Mark financial profit for supervison process recycling
benzin

APPENDIX K

TABLE 1

WASTE MINIMIZATION AND IMPROVEMENT PROJECT
CHEMICAL INDUSTRY SECTOR
POLAND

SUMMARY OF WASTE MINIMIZATION PROJECTS

Project Description	Project Status
AZOT	
Industrial wastewater recirculation	Completed
Aluminum waste reduction	Completed
DCAP wastewater recirculation	Completed
Raw material use reduction	In progress
Steam use reduction	In progress. Complete by '95.
Water use reduction	In progress
Solid waste reduction	In progress
Aluminum waste reduction in chlorfenvinfos plant	Completed
Distillation waste reduction in chlorfenvinfos plant	Completed
Waste volume and toxicity reduction in Miedzien plant	In progress
Waste reduction in suspended powder production plant	In progress
Packaging waste reduction	In progress
Recycling of containers in Enclofos plant	In progress

Project Description	Project Status
BLACHOWNIA	
Reuse water conditioner afterwash for makeup water	In progress
Reconfigure naphthalene piping and storage system to reduce evaporation losses	Completed
Replace coke filter media with rye or wheat media to minimize waste disposal costs	In progress
Install automatic control system in water reconditioning filter to reduce cycle times and save energy	In progress
Replace higher horsepower pumps with lower rated pumps to reduce energy costs	Completed
Increase benzol recovery yield using improved analyses using gas chromatograph	In progress
BONARKA	
Elimination of HF emissions in calcium phosphate production	Completed
Modernization of calcium phosphate plant and reduction of dust and other wastes	In progress
BORUTA	
Reduction of air emissions	Partially completed / In progress
Reduction of wastewater discharges	Partially completed / In progress
Reduction of water use	Partially completed / In progress
Reduction of solid wastes	Partially completed / In progress
Reduction of process wastewater discharges and waste loadings (COD, metals) through recirculation and reuse	Partially completed / In progress
Reduction of process wastewater discharges and waste loadings (COD,metals) through production technology changes	Partially completed / In progress

Project Description	Project Status
BORYSZEW	
Reduction of waste in epoxidized vegetable oil plant through change of raw materials and process technology	Partially completed / In progress
Reduction of waste in dibutyl maleate plant by automatic analysis to optimize yield	Partially completed / In progress
Reduction of wastes through recirculation, phase separation, process technology changes	In progress
Reduction of wastes through change of catalyst, and process optimization in DBM plant	In progress
KEDZIERZYN	
Reduction of wastewater and air emissions in TDA plant	In progress
Reduction of butanol storage loss emissions	In progress
Modify heating systems to reduce phthalic anhydride emissions and losses	In progress
Modify venting system to reduce phthalic anhydride emissions and losses	In progress
Reduction of ammonia emissions in urea plant	Completed
Install CO analyzers to improve boiler efficiency	Under evaluation
Eliminate methane fraction discharges from argon plant during shutdown	Completed
Reduce methanol and formaldehyde air emissions from formalin plant	In progress
Reuse wastes from phthalic anhydride plant	In progress
Install CO analyzers in syngas heaters to optimize combustion efficiency	In progress
Reuse cooler condensate to reduce wastewater discharges	Completed
Reduce formalin losses from storage	
Reuse adhesive plant condensates	

Project Description	Project Status
POLCHEM	
Reduction of fresh water make up in boiler feedwater treatment	Completed
Reuse of liquid wastes in lime milk preparation	Completed
Reuse of post-neutralization sludge	Completed
Elimination of waste sulfuric acid through process technology modification in chlorosulfonic acid plant	In progress
POLFA	
Reduce solvent losses through pump replacement; vacuum and condensation process changes; pipe and insulation replacement; installation of automatic controls.	Completed and in progress
Improve butyl acetate recovery	In progress
Decrease steam consumption	Proposed
VISCOPLAST	
Solvent recovery from carbon adsorption unit (cooler replacement, etc.)	In progress
Leak detection and repair program to reduce solvent emissions and losses	Proposed