- PD-ABK-046
91965

CUMIN, CARAWAY, AND DRIED APRICOTS
A CONSULTANCY REPORT
ON THE REHABILITATION OF CASH CROP PRODUCTION
IN SOUTHWEST AFGHANISTAN

PREPARED BY

THOMAS M. BROWN, MS. HORTICULTURE

FOR

MERCY CORPS INTERNATIONAL

AND

THE OFFICE OF THE US AID REP TO AFGHANISTAN

OCTOBER AND NOVEMBER 1990

TABLE OF CONTENTS

SUMMARY 3

PART I

REPORT ON CUMIN AND CARAWAY PILOT PROJECT 4
ANNEX 1 - COST AND RETURN COMPARISON 12
ANNEX 2 - RESULTS OF CUMIN INFORMATION SURVEY 13
ANNEX 3 - IMPLEMENTATION PLAN FOR CUMIN WITH ATTACHMENTS 14
ANNEX 4 - IMPLEMENTATION PLAN FOR CARAWAY WITH ATTACHMENTS .. 15
REFERENCES 20

PART II

REPORT on DRIED APRICOT IMPROVEMENT PROJECT..... 22
ANNEX 1 - IMPLEMENTATION PLAN FOR DRIED APRICOTS
WITH ATTACHMENTS 27
ANNEX 2 - HVH STUDY..... 33
ANNEX 3 - SKETCH OF DRYING TENT..... 48
REFERENCES 49

****

SUMMARY OF CONSULTANCY

Mr. Thomas Brown was contracted as consultant for the Cash Crop Pilot Project under PVO Support Project Cooperative Agreement No. 306-0211-A-00-0961-00. He arrived in Quetta on October 12, 1990

The first week was spent travelling and becoming acquainted with the scope of the Cash Crop Pilot Project. Information resources were tapped in the MCI office, Quetta bazaars, Agricultural Research Institute-Sariab, Quetta, local fruit farmers, and the Sorkhab refugee camp.

A survey was designed and used in the Sorkhab refugee camp near Quetta to learn more about the interest of Afghan farmers in growing cumin.

A meeting with USAID staff in Islamabad revealed strong interest on the part of USAID in the targeting of the raisin industry as a critical point in the rehabilitation of the cash crop economy of Afghanistan. Drafts of parts of the High-Value Horticulture study were obtained in Islamabad, along with copies of several studies of relevance to this consultancy, in the USAID information facilities.

Dr. Abdul Wakil was met at the Peshawar DAI office and several hours were spent in discussion with him concerning apricot drying technology, dried fruit marketing, and possibilities for a joint training seminar with MCI, Quetta for teaching pilot project agents the technology of sulphuring and drying apricots. Profitable discussion was also had with Mr. Yusuf Kohistani regarding the economics of growing cumin compared to wheat.

After Peshawar, the Agha Khan Rural Support Programme in Gilgit was visited. Various aspects of their apricot sulphuring programme were observed. A price more than double that of Afghan apricots was observed in the Gilgit bazaar. Quality of dried fruit on the whole was better than typical Pakistani imports from Afghanistan.

Upon returning to Quetta, the information from the trip was compiled along with new cumin survey information gathered by an assistant in Quetta during the trip. The proposal for the Caraway pilot, the Cumin Pilot and the Dried Apricot Pilot were developed and written up.

Meanwhile, favorable discussions were held with Myron Jespersen and Joseph Rittmann regarding the return of the consultant as a full-time worker with MCI. A position was offered and taken into consideration. A response will be given within one month of the end of the consultancy.

CUMIN

INTRODUCTION

The production of cumin, (Cuminum cyminum) has an extremely long history in Central Asia and the Middle East. It is believed to be native to the Levant area, and further east in Turkestan.

Cumin is a small, slender annual herb of the coriander family, growing to a height of 30-45 cm. The plant produces a stem with many branches bearing long, finely divided deep green leaves and small white or rose-coloured umbelliferous flowers. It is a mediterranean zone, cool-season crop.

Cumin is used primarily as a cooking spice in South and Central Asia, Latin America Europe and North America. There is a steady demand for cumin in the North American market and this appears to be the case in most parts of the world.

PAKISTANI/AFGHAN MARKET PROFILE OF CUMIN

In Afghanistan, there is a long tradition of growing and exporting cumin. Southern Afghanistan has been a major source of the spice for the South Asian market for many centuries. The traditional Kandahar-Chaman-Quetta route still exists in spite of the Soviet invasion and subsequent disruptions. A large portion of the cumin that enters the South Asian market is grown in the Helmand and Kandahar provinces. However, according to one Afghan Quetta-based cumin trader the Herat area sends the most cumin to Pakistan. It is difficult to verify the prime supply area as the bulk of the cumin exported into Balochistan is wholesaled in Kandahar to agents who then move it across the border to Chaman. It is then sold again at the wholesale market in Chaman to merchants who may sell it yet again to an exporting firm or to a local retailer. Very little of the cumin remains in Balochistan. Most of it is moved to Karachi for retailing and for the international market. A significant portion is distributed to other provinces of Pakistan for retailing or transported for export to India by road from Lahore. Cumin which is bound for the Punjab is usually purchased directly in Chaman, while cumin which is bound for Karachi is often sold via agents in Quetta. This information is not readily quantified due to the paucity of relevant government agricultural statistics.

Pre-war data on the extent of Afghan cumin cultivation and average yield is not available. It is safe to assume, however, that cumin production was considerably greater before the war. This assumption is based on the general precipitous decline of Afghan agricultural production and exports since 1980. Further,

with the displacement of a large portion of the Afghan agrarian population, and the destruction of agricultural infrastructure, it is clear that whatever the pre-war production profile, the situation is considerably worse now. Data from the Swedish Committee for Afghanistan shows an increase of farmers growing cumin from 1988 to 1989. In 1988 in the Kandahar area 1% of the farmers questioned grew cumin. In 1989, 23% of those questioned were growing cumin.

Current anecdotal evidence from four cumin traders in Quetta implies that the Pakistani cumin market and the export market would not approach saturation if production in Afghanistan returned to pre-war levels. This is corroborated by an American spice buyer who foresaw a somewhat greater future demand for cumin in the US but also cited increased production levels in Pakistan, Iran and India as offsetting demand-induced price increases.

Most of the Quetta traders interviewed were quite vague in giving exact numbers with regard to the amount of cumin they handle in a year. One trader, however said that his firm handled 30,000 to 40,000 45 kg sacks per year, all of which was from Afghanistan. Price quotes are available from the commodity section of any Pakistani newspaper. As this is the planting season, the price of cumin should be around its annual peak and is selling in Quetta for Rs.17.5-20/kg; in Lahore Rs.17.5-25/kg; in Multan, Rs.24/kg. The range in prices is a result primarily of varying degrees of foreign matter content. There is no other criterion for quality used for cumin.

Appendix 1 shows a cost/benefit comparison of Afghan cumin and wheat production and income adapted from the reports of MCI field staff working in the Kandahar area. This table confirms the response of Afghan farmers interviewed regarding the benefit of growing cumin over wheat.

PRODUCTION OF CUMIN

Cumin is grown as a winter (rabi) crop in both Balochistan and Southern Afghanistan. In Balochistan, it is grown mainly as a dryland crop and not fertilized. In Afghanistan, it is both irrigated and fertilized. The following cultural information is adapted from interviews with 31 Afghan cumin farmers and from the Economic Botanist at ARI-Sariab, Quetta.

Seedbed preparation:

Medium weight soils are preferred as they are water retentive but do not develop such a crust as to inhibit seedling emergence. Both tractors and draught animals are used currently to prepare the soil. Many of the farmers interviewed hire tractors for this

task. The soil is stirred with a chisel harrow if with a tractor, or with a local plow if with draught animals. The field is then flooded. When the water soaks in, the cumin seed is sown. Because the seed is light and fluffy, some farmers mix the seed lot with some damp soil to keep it from blowing as it is broadcast and to get better distribution on the ground. Fertilizer is also broadcast at this time.

Planting/Fertilizing:

Planting dates vary greatly. As cumin is a so-called "long-day" plant, it will flower and set seed whatever its size in the mid to late spring; April and May. Thus harvest dates are quite similar regardless of date of planting. Farmers held strong opinions about the best date of planting. In Balochistan, planting begins in October and may continue into March. Afghans, with a few vociferous objections, preferred November and December.

It is not known whether cumin requires vernalization in order to flower, if so, given the late planting dates in Balochistan, requirements must not be high. Several farmers mentioned that they wait for a winter rain and plant thereafter. In comparison, wheat does not have as much planting date flexibility.

Seeding and fertilizer rates as per ARI-Sariab recommendations are as follows:

Seed - 10 kg/ha
Fertilizer - 50 kg N: 50 kg P: 0 kg K/ha

Some Afghan farmers split the fertilizer applications into two or three; applying a fraction after each irrigation. There is no research that affirms this practice in cumin, however, most crops that benefit from fertilizer perform even better with split applications.

Of the farmers interviewed, 16 used either urea or urea and diammonium phosphate. Not all farmers interviewed use chemical fertilizer. Twelve would use it if available, three used manure alone and one used manure in combination with chemical fertilizer. The farmers' estimates of fertilizer application rates vary in the extreme. Eight reported using roughly 2.5 - 3, 50 kg sacks/ha.

Irrigation:

Most Afghan farmers who described the process irrigate the crop three times; once just after preparing the seedbed and before sowing, once at flowering and once during seed-fill. Several complained of not having sufficient water due to destroyed karezes and canals.

Pest and Weed Control:

Of the farmers interviewed, 21 reported minor problems with either disease or insects. None, however, considered the problems to be serious and not recurrent on a yearly basis. The common disease of cumin is Fusarium wilt (Fusarium oxysporum). In Balochistan, workers are investigating a possible correlation between early planting date and Fusarium wilt occurrence. Rather than use Benlate, the fungicide of choice, it would be simpler to encourage a two- or three-year crop rotation, using non-solanaceous vegetables, forages, and grain crops to disrupt the lifecycle of the pathogen.

Aphids are also mentioned as a problem. In many cropping systems, especially in arid regions, aphids reach yield-threatening populations only after heavy insecticide use. As it is doubtful that Afghan farmers have easy access to enough insecticides to over-spray as they would have to, it is doubtful that a great potential exists for immediate losses to aphids. Aphids do, however, spread the virus (Myzus persicae). This virus can cause the death of the plant and can also infect the seeds. It can be spread by a small number of aphids, and over several years, if the farmer grows his own seed, his entire crop can be infected. Infected plants should be rogued out and burned immediately.

Five farmers complained of weeding problems. They believed that most of their weeds came from their cumin seed. The amount of time spent weeding per land unit was difficult for them to estimate. However, they felt it was considerable. Two said they could easily increase their plantings of cumin if they had resources for more weeding.

Harvest:

As stated above, both early and late planted cumin are ready for harvest in the Spring. The plant dies and is allowed to dry somewhat, but is cut while a bit green to avoid shattering and seed loss. The whole plants are sickle harvested and then threshed with oxen, flail, or tractor. The seeds are winnowed in the traditional way and are stored in 45 kg sacks.

Post-Harvest:

The seed is usually sold immediately after harvest. The farmer may sell it to an itinerant buyer who in turn sells it in Kandahar, or he may take it Kandahar himself and get a slightly higher price for it. One farmer interviewed brought his from the Kandahar area to Quetta for sale.

CARAWAY (BLACK CUMIN)

Caraway (Nigella sativa L.), known locally as Black Cumin, is also an umbellifera, but a fleshy root-forming perennial. It does not bear seed until its third season. It grows to about 45 cm.
It prefers the northern slopes of mountains; which implies a preference for lower temperatures and damper soil.
Interestingly, it is considered a wild plant in Pakistan, and little hope is held that it is cultivable. In northern Helmand, and northern Kandahar, however, it is cultivated as an apparently semi-domesticated plant. It is also gathered from the wild. Pakistan's entire caraway production is gathered wild from the mountains.

There is no yield data available for caraway. Only three farmers were interviewed who had grown it and their retrospective yield estimates were rather rough and not corroborative. The year caraway is sown, it is planted with wheat as a nurse crop. Thereafter, it may be sole-cropped, but may also have a companion crop. Caraway may also be planted as a bulb in the fall and harvested the next spring and each year thereafter. Bulbs may be purchased in the fall, and planted immediately.

Several farmers interviewed believed caraway has an irrigation requirement that is too high for their resources to support. They also expressed misgivings over the amount of time it takes to get the first crop.

Serious constraints are apparent that severely limit caraway production. It is reasonable to assume that more farmers would grow caraway if they thought they could. The Quetta market price provides sufficient motivation at Rs.100/kg. It is probable that caraway possesses certain climatic requirements that are met only in small areas. At present there are no established scientific procedures for caraway culture. However, this should not prevent some patient experimentation.

SUMMARY OF CONSTRAINTS OF CUMIN AND CARAWAY

Cumin:

In many cases in Afghanistan, cumin is preferable as a cash crop to wheat. As this is no secret to Afghan farmers, there is no need for a strong push for greater cumin hectarage in Afghanistan. Production will no doubt increase in proportion to returning rural refugees. It would be valuable, however, to assist the present trend by removing some constraints in a fashion that would encourage greater self-sufficiency.

The major constraints to cumin production in Afghanistan are:

1) Lack of irrigation water due to damaged canals and karezes.

2) Low availability of fertilizer.

3) Difficulty with weeds.

The major constraints to caraway production in Afghanistan are:

1) Lack of widespread experience with the crop among Afghan farmers.

2) Lack of reliable cultural information.

3) Three year lag time between planting and first harvest.

4) Possible difficulty in establishing a stand.

RECOMMENDATIONS FOR CUMIN

Water and Fertilizer:

The real limiting factor is of course, water. Therefore it would be most beneficial to cumin production as well as all other agricultural production, to expand the water supply system rehabilitation program.

At present MCI is involved to a considerable extent with contracting for the rehabilitation of water supply systems within the MCI programme area. This program could have a cumin growing incentive plan appended, wherein those farmers whose land was to be irrigated with the rehabilitated water supply system would be eligible for clean cumin seed and a corresponding amount of fertilizer at a price subsidized by MCI.

The purchase of the seed and fertilizer would be a one-time opportunity unless the crop failed, and would be entirely the decision of the farmer.

Weeds:

Because clean seed brings fewer weeds into the field, and also brings a 10%+ higher return in the market, it would be in the interest of the Afghan farmer to use and sell clean, sound seed.

Using data already gathered, villages with relatively large amounts of land already in cumin production (eg; Madzai, Manja, Morghakicha; Daman District) would be selected as pilot sites.

The authorities of the area would be approached in the appropriate manner, and the following proposal submitted to them:

> A simple seed cleaner/sifter with screens for various seeds including cumin would be brought to the area and would be available for purchase at a price subsidized by MCI. If there was no interest or no capital for purchasing the cleaner outright, it could be sold for three years' labor. A contract would be drawn up wherein the buyer/operator would agree to maintain the machine at his own expense, could profit from any service he rendered with it, but would have the machine repossessed if it were found to have been rendered inoperable due to volitional negligence. The local authorities would be responsible for mediating and carrying out the repossession.
>
> The cleaner could also be used in the same way as the wheat seed cleaner: on a rental basis. Mercy Corp personnel would be responsible for technical assistance, and spare parts acquisition assistance. MCI would have right of access to the machine through the duration of the contract.
>
> Signatory to the contract would be the buyer, the Mercy Corps representative, and a representative of the local authority.
>
> The cleaners would be purchased in Pakistan and delivered to the village of the buyer. An in-depth demonstration would be made, including cleaner maintenance and trouble-shooting. The contract would be signed by all parties at the same time.

RECOMMENDATIONS FOR CARAWAY

Given the constraints mentioned above, it is clear that a greater knowledge base should be established before attempting a widespread promotion of this crop. As a pilot project, caraway production would be introduced as an option for which farmers could receive some assistance if they would sow caraway seed on some of their land. The farmers would be given wheat for two years to replace their production loss by the caraway. The third year should see a much greater cash yield from the caraway than would have come from the wheat.

Alternatively, the tubers of caraway can be offered as an option with faster profit potential, as they should produce some seed the year after planting. As the performance of caraway tubers is unknown, it would be something of a gamble for the farmer. It is probable in this particular case that information is available but it is anecdotal among caraway growers.

Preparation for this pilot simply involves the familiarizing of MCI field staff with caraway growing areas and with the raising of the crop itself. This will be done by a tour of the areas of caraway production. A survey will conducted on this tour to ascertain:

1) The interest of farmers in a target area (presently Shari Safahor Daman) for trying black cumin.

2) The availability of propagation stock, and the finer points of caraway culture in areas of caraway cultivation.

With the return of the surveys, the information will be evaluated, and if interest has been expressed, and propagation stock is available, the introduction programme would proceed immediately. A short meeting would be held to acquaint farmers with the techniques and the seed and tubers would be sold to the farmers at 1/3 the purchasing price.

MCI field staff should try to arrange for the initial caraway plots to be reasonably near their centers so the crop can be frequently observed. Field staff would be responsible for compiling all important cultural data about the crop.

Field staff would also be responsible for technical support of the trial farmers. Evaluation of the pilot would, of necessity, take place after the caraway harvest season. Modifications would then be made and presumably other districts surveyed and assisted in establishment of a caraway stand.

ANNEX 1

COST AND RETURN COMPARISON OF CUMIN AND WHEAT
NOVEMBER 1990

	RUPEES	
	CUMIN	WHEAT
PRODUCTION COST Rs/KG	3.50	1.70
TRANSPORT COST Rs/KG (Daman-Chaman)	.45	.45
FARM-GATE PRICE Rs/KG	15.00	3.40
WHOLESALE PRICE Rs/KG IN Kandahar	18.00	4.40
AVG. YIELD KG/HA	542.00	1,739.00
NET RETURN Rs/KG FARM-GATE	11.50	1.70
NET RETURN Rs/KG WHOLESALE IN KANDAHAR	14.05	2.25
NET RETURN/HA FARM-GATE	6,233.00	2,956.00
NET RETURN/HA WHOLESALE IN KANDAHAR	7,615.00	391.00

Data compiled from market information, ARI-Sariab, Quetta statistics and MCI Kandahar area field workers.

ANNEX 2

RESULTS OF CUMIN INFORMATION SURVEY CONDUCTED OCT/NOV 1990
SORKHAB, SARANAN, and PIR ALIZI REFUGEE CAMPS

1) Farmers interviewed:	31
2) Districts represented:	Daman, Dand, Maruf, Arghastan, Arghandab, Panjwai, Maiwand, Khakrez, Grishk
3) Hectares planted in cumin:	65.9
4) Estimated cumin seed sown/ha:	31.8 kg
5) Percentage farmers irrigating:	100%
6) Average number irrigations/year:	2.5
7) Planting dates:	November 1 - January 15
8) Number using manure or fertilizer:	19
9) Number who would use fertilizer if available:	30
10) Number reporting serious pest problems:	0
11) Number reporting minor pest problems:	21
12) Number reporting yield loss due to water shortage:	10
13) Average estimated yield (their estimates):	875 kg/ha

ANNEX 3

IMPLEMENTATION PLAN FOR CUMIN PILOT PROJECT

Using already-employed staff, cumin seed should be distributed at 1/3 market price to farmers with an interest in raising cumin. The cumin would be purchased locally in Afghanistan, and stored and sold out the area office, under the management of the Area Coordinator.

Clean cumin seed would also be promoted and supported by the involvement of a seed cleaner in cumin growing areas. The cleaner, purchased from the U.S. if a local machine was unavailable, would be offered on a rental basis to cumin growers. The machine would also be available for sale in exchange for either cash or labor, as mentioned in the recommendations.

Evaluation of the pilot would be based on farmer's acceptance of the cumin seed and by their success in raising it.

CUMIN PILOT PROJECT CALENDAR

ACTIVITY	MONTH (X=10 Days) N	D	J	F	M	A	M	J
Purchase, clean cumin seed	XXXX							
Transport to district offices in Afghanistan		XXXXX						
Sell cumin seed		XXXXXXX						
Evaluation						XXXXX		

CUMIN PILOT PROJECT BUDGET

ITEM/ACTIVITY	ESTIMATED COST $US
Five tons cumin seed	$ 4,000
Transport	500
Storing, handling	1,000
Seed cleaner	5,000
TOTAL	$ 10,500

ANNEX 4

IMPLEMENTATION PLAN for CARAWAY PILOT PROJECT

1) Hire pilot two project field staff, and train for simple survey work in nearby refugee camps. (early November)

2) Field staff to visit Khakrez and observe black cumin culture, conduct their survey and make arrangements for a purchase of propagation stock (seed and tubers) from caraway farmers before the end of November. (Survey sample attached.)

3) Field staff to proceed to Shahri Safah or other suitable district in Kandahar or Zabul province and conduct second survey (sample attached)to ascertain the interest of farmers in trying a small area of caraway, either as a seeded crop or as a tuber.

4) The field worker should be familiar enough with the growing of black cumin that he can answer all important questions.

5) If the farmer is interested, the field worker may arrange a field trial on a portion of the farmer's land; probably about 1/2 or 1/4 Jerib.

6) MCI will subsidize the price so that the farmer pays 1/3 of the price paid in Khakrez. This arrangement may be proposed to farmers who show credible interest.

7) Having conducted the second survey, the field workers will return to MCI, Quetta, with the information.

8) Depending on the results, propagation stock will then be purchased on a return trip to Khakrez and distributed at Shahri Safah, or, if sufficient interest does not exist in Shahri Safah, the stock will be stored in Chaman and another area surveyed for interest.

9) If immediate acceptance is high, another trip to Khakrez would be justified to purchase more stock.

10) MCI field staff will monitor the participating farmers to render technical assistance and to compile a report on the performance of the crop and the farmer (November-June).

ANNEX 4.2 CARAWAY PILOT PROJECT STAFFING PLAN

NOVEMBER, 1990

Two survey conducting staff to be hired:

Name:	Agha Jan
Age:	35
Training level:	post-high school Agriculture, teaching experience
Employment status:	Temporary/probationary
Salary:	Rs.4500/month

Name:	Mohammad Sadiq
Age:	25
Training level:	12th class, Agriculture, Kandahar
Employment status:	Temporary/probationary
Salary:	Rs.4000/month

ANNEX 4.3 CARAWAY PILOT PROJECT CALENDAR

ACTIVITY	MONTH (X=10 Days) N	D	J	F	M	A	M	J	J	A	S	O
Staff hiring/training	XX											
Surveying, Khakrez and Shahri Safah		XX										
Purchase and distribution caraway seeds/tubers		XXX										
Debriefing and monitoring training			XXX									
Monitoring and further feasibility surveying				XXXXXXXXXXXX								
Harvest monitoring and pilot evaluation								XXXXXXX				

CARAWAY PILOT PROJECT BUDGET

ITEM/ACTIVITY	ESTIMATED COST $US
Purchase caraway propagation stock one ton	$ 8,000
Materials transport within Afghanistan	2,000
Project staff	4,000
TOTAL	$ 14,000

ANNEX 4.4 AVAILABILITY SURVEY FOR BLACK CUMIN BULBS AND SEEDS

Surveyor's Name_____

Farmer's Name_____,_____,_____

1) Name of district_____

2) Name of village _____

3) How much black cumin cultivation in village (in Jeribs) _____

4) Number of farmers growing black cumin _____

5) Name the crops that this farmer grows with black cumin.

1.wheat 2.vegetables 3.poppy 4.other 5. none

6) Does the farmer have any problems with black cumin _____

1. rootworms 2.disease 3.insects

7) Amount of bulbs required to plant one Jerib _____

8) Amount of seed required to plant one Jerib _____

9) Will this farmer sell seed or bulbs to MCI? _____

10) Price of one maund (4.5 kg) of black cumin bulbs _____

11) Price of one maund of black cumin seed _____

12) Remarks and observations about black cumin.(use other side)

ANNEX 4.5 INFORMATION SHEET FOR FARMERS PLANTING BLACK CUMIN

1) Your name _____

2) Farmer's name _____, _____, _____

3) Village name _____

4) District name _____

5) Crops currently planted 1.wheat 2.forage 3. vegetables
4.other, name_____

6) Size of farm (in Jeribs)

7) Size of area to be planted to black cumin (in Jeribs)

8) Seed _____, 9) bulb _____, or 10) both planted_____

10) Will the farmer irrigate? _____

11) Amount the farmer spent on black cumin seed _____
or bulbs 12)_____

Comments

REFERENCES

American Spice Trade Association (1990) Cleanliness Specifications for Unprocessed Spices Herbs and Seeds

Parry, John W. (1962) Spices: Their Morphology, Histology and Chemistry Chemical Publishing Co. NY,NY. pp.115-118,198.

Pruthi, J.S. (1979) Spices and Condiments National Book Trust, New Delhi, India. pp.103-107.

The Swedish Committee for Afghanistan (1990) The Agricultural Survey of Afghanistan, 6th Report.

Bajoi, Abdul H. ed. (1989) Annual Research Programme: Rabi 1989-1990. Agricultural Research Institute Sariab, Quetta

Bajoi, Abdul H. ed. (1988) Important Diseases of Cumin and their Treatments Bulletin of the Agricultural Research Institute, Sariab, Quetta (Urdu)

High Value Horticulture, Inc. (1990) Afghan Cash Crops Feasibility Study (draft). Development Alternatives, Inc. Peshawar.

Ziraat Baluchistan Quarterly Jan-March vol.17 no.1. (Urdu)

PERSONS MET

Spice buyer, McCormick Spice Company, Maryland, USA

Dr. Bajoi, Director, Pakistan Agricultural Research Institute, Sariab, Quetta

Dr. Nek Tareen, Pakistan Agricultural Research Institute, Quetta

Mr. Ikramul Haq, Economic Botanist, Pakistan Agricultural Research Institute, Sariab, Quetta

Mr. Yusuf Kohistani, Economist, DAI, Peshawar

Pakistani cumin traders, Quetta

Afghan cumin growers, Sorkhab refugee camp near Quetta.

Mr. G. Lewis, Chief Agricultural Development Officer, USAID Islamabad

Mr. P. Church, Agricultural Development Officer, USAID Islamabad

Mr. A. Rude, USAID Islamabad.

Mr. Edgar Stem, Tufts University, USA.

Mr. M. Jespersen, MCI, Quetta.

Mr. Salam Jan, MCI, Quetta.

Mr. Rahmatullah, MCI, Quetta.

DRIED APRICOT IMPROVEMENT PILOT PROJECT

SUMMARY

There is sufficient evidence that markets exist for high-quality Afghan dried apricots, both domestically, regionally, and in the West (see HVH study, 1990, Annex 2).

Simple technology exists that is easily adaptable to the Afghan agricultural system which will greatly improve the quality of the finished product. The burning of sulphur in a closed area with freshly harvested fruit has proven to be a cheap, easily adapted technique with rewards both hygienically and economically.

It is proposed that this technique of sulphuring apricots as a step in their drying be promoted in a sustainable, market-sensitive fashion. For details on sulphuring and apricot drying, see Annex 2, HVH study. The technique therein described is to be simplified considerably, and a packaging component added.

Introduction of this post-harvest processing technique has a double benefit:

1) Market potential increases for an already existent and under-utilized product

2) The profession of post-harvest fruit processor is renewed and supported in Afghanistan.

INTRODUCTION AND SUPPORT OF SULPHURING TECHNOLOGY

It is proposed that this technology be introduced at three different economic tiers in the dried apricot economy. The first tier, grower/processor; the second tier, initial buyer/wholesaler; the third tier, tertiary buyer and exporter.

Tier One:

This tier is occupied by the grower/processor who has traditionally dried the fruit. The obvious advantage to a technological introduction at this level is the vocational predisposition of the target group. The risk is, of course, that fruit growers are already in an economically tenuous position in Afghanistan and may be reluctant to invest time, and eventually money, in new technology.

Five Afghan field workers would be hired with horticultural experience and a familiarity with all phases of apricot growing and drying. These workers should be from an apricot growing area. They would receive training at an MCI sponsored training seminar which would include instruction and practice in proper handling and preparation of apricots for sulphuring, the

sulphuring technique, proper drying procedures, and packaging for sale and shipment.

The workers would then proceed to areas of high apricot production and survey the area for known innovative growers. The necessary demonstrations and training would be given, to show local people the technique, and to identify interested growers.

When the field worker identifies 3-5 interested growers, he trains them, and equips them each with materials to sulphur-treat a portion of their crop. The field worker is free to sell these materials if farmers are interested but must distribute them anyway if the farmer is not willing to pay. This particularly important process of trial acceptance will be monitored closely by other MCI field staff as well.

Once the training and distribution of materials is complete, the farmers must sell the new product via their traditional marketing channels.

The field worker will be supplied with extra materials which he can sell to other interested growers or which he can use as a private fruit-drying contractor. The field worker would serve as a conduit for material support for the farmers in the trial, should they need extra sulphur or polyethylene film. These materials would be sold by the field worker at a pre-designated price plus whatever profit the field worker could make. The field worker would account for all of his sales to a field officer.

At the end of the season, the field worker would be debriefed, and his accounts reviewed. A field survey would then be conducted to corroborate his account of the season and to evaluate the trial. The focus of this survey would be on the farmers with whom the field worker had shared the technology and materials.

At this point, sometime in July of 1991, recommendations would be made for modifying, expanding or discontinuing the programme at this economic tier.

Tier 2:

This tier is occupied by the itinerant buyer who purchases directly from the fruit grower. Though traditionally this primary buyer does not process fruit, he is familiar with the fruit growing and drying processes. Further, and most importantly, he is fully aware of the economic potential of a high quality product. It is surmised that the primary buyer would immediately see the greater profit potential for apricots dried in this new process. Thus, he might be willing to modify his buying strategy to include a sulphuring/drying element.

Through MCI field staff, ten of these primary buyers will be contacted. They would be invited to attend the fore-mentioned sulphuring/drying seminar. Incentives could be offered to the buyers to get them to the seminar as they would, up to that point, have only heard about the process, and not seen a demonstration.

Once trained, the buyers would be consulted to ascertain their plans for profiting from this technology. Those who demonstrated credible interest would be required to submit a proposal to MCI for support.

In this proposal, they would delineate their planned area of operations, method of application of the technology, and method of quality control. The proposals would be submitted at the end of the seminar and would be considered immediately.

Granted support would consist of sulphuring and packaging materials sufficient to meet the requirements of the proposal. Transport of the materials into Afghanistan may also be part of the package. Cash grants would be unnecessary as the buyer should already have sufficient access to cash for the season's buying.

In return for this support, the buyer would be required to give an account of the results of this new technology to his business, and to give a complete description and evaluation of the process which he used to utilize the technology.

In return for the buyer's cooperation in evaluation, he would be offered access to more processing materials at a discounted price. At this point the relationship with MCI would terminate and the buyer would be on his own.

Evaluation would involve the debriefing of the buyers after the season, and also visits to the farmers with whom he worked. The success of the pilot would be based on the reactions of the buyers, concerned growers and on-the-field review/evaluation by MCI field staff. Decisions to expand, modify or discontinue the programme would be made in July and August of 1991.

The Third Tier:

Occupants of this tier are the large merchants who have contacts both inside Afghanistan and abroad in international markets. Primarily, their purchases of dried fruit are from wholesale markets in Chaman or Quetta. Many, however, have close contact with buyers inside Afghanistan and for all intents and purposes straddle the border in their business activity.

The advantage of involving this tier of merchants is their very keen interest, as in the second tier, in a more marketable product. Further, they also have access to wider markets, hence, a broader perspective of where to sell the product.

It is proposed that five large merchants in the Quetta area be contacted and inquiries made about the extent of their trade activity in apricot producing areas of Afghanistan. Those with a long and positive history in those areas will be invited to participate in the pilot project. For the merchants this would entail the hiring of motivated agriculturally experienced Afghans who would be from apricot producing areas. MCI would be responsible for the salaries of these people for one year, after which the merchant would assume their salary, which should by then be more than compensated for by the higher price fetched by the sulphured apricots.

These agents, or factors for the merchant would be oriented in Quetta. Their training would be conducted in the same way as those mentioned above. Included in the training would be, however, an official representative of the trading firm as well. At the conclusion of the training, the representative would have to decide if the use of this technique held a potential profit for his firm. He, like the primary buyer, would then submit a proposal for support from MCI.

The procedure of proposal review would be the same, though more support could possibly be rendered to the large trader to facilitate higher volume production. This factor or agent for the merchant is a hybridization of the two other types of trainees. He is employed by a private, profit-motivated firm, and therefore is required to work profitably or he loses his job; however, as the technology is new and its acceptance far from certain, the agent's job security would be buffered by a temporary salary subsidy from MCI.

Review and evaluation of the work would be a part of the assistance grant. At the end of the season, the same review team would debrief and evaluate this segment of the pilot.

TRAINING PROGRAM

The program would be held in Quetta early in the season, so that fresh apricots could be used in the training, but with enough time left for trainees to proceed to their work areas inside Afghanistan. The training would probably be conducted in cooperation with DAI, Peshawar, to give their trainees a better training environment; that is, an ideal fruit drying environment.

A course curriculum planning meeting would need to take place between MCI and DAI staff in January or February 1991.

The first step in the program would involve instruction in the basic techniques of sulphuring apricots. Sulphuring tents and other materials would be demonstrated, and a great emphasis would be placed on quality production and repetition of the technique. If the trainee could not master the technique by the end of the seminar, he would forfeit any opportunity for assistance from MCI.

As mentioned above, most of the trainees who remained at the end of the seminar would submit a proposal to the project staff for the use of the technology. The project would be prepared to equip the trainees with a limited amount of materials to give them a good profit if used judiciously.

ANNEX 1

IMPLEMENTATION PLAN FOR DRIED APRICOT PILOT PROJECT

Full-time staff hiring:

Five specialty staff are to be hired to eventually become general tree and vine fruit specialists with the title Assistant Area Coordinator (AAC). Five field-level implementors or extensionists will also be hired to work under the AACs. Hiring and orientation should be complete by mid-February.

Fresh apricots for training:

Arrangements should be made for the shipment of one ton of fresh apricots to Quetta for arrival at the end of March. Investigations must be made immediately to locate and contract for early, ripe apricots which can be used in the training seminar. This is extremely important and rather problematic.

The trainees need to have fresh fruit to train with, but must also be able to go to their work areas in Afghanistan at the beginning of the apricot drying season. Rates of acceptance would certainly be lower if the new processing technology is introduced mid-season by the trainees rather than prior to the fruit harvest.

Trainees contacted:

In January and February, MCI field staff including some of the special pilot project staff, will contact potential first and second tier trainees inside Afghanistan and invite them to attend the training seminar in March. At the same time, third tier trainees will be contacted by MCI staff from Quetta.

Curriculum development:

The training curriculum for the apricot sulphuring seminar will be developed by the project coordinator, with Dr. Abdul Wakil, of DAI, Peshawar, and Mr. Salam Jan, MCI, Quetta. This would require two to three days for planning and some testing of techniques.

Seminar preparation:

It is essential that the seminar run smoothly to facilitate an opportunity for trainees to arrive at target areas prior to peak apricot season. Therefore, materials such as plastic sheeting and basket trays as well as sulphur should be purchased as soon as located. The basket trays will most likely need to be custom made, and enough advance time should be given the basket makers that they will not be in short supply.

It may also be necessary to offer transport to the trainees from inside Afghanistan. This will need to be clearly arranged to avoid unintentional absences.

Conducting the seminar:

The apricot sulphuring seminar will be scheduled to begin a few days before the arrival of the fresh apricot shipment. The seminar will proceed as per the curriculum developed earlier. Repetition of the sulphuring technique and the importance of cleanliness will stressed.

Most of the participants will have the opportunity to submit a proposal to MCI. Parameters for the proposals would be set forth regarding amount of materials and services available from MCI. For ease of handling the proposals, each type of material or service will be assigned a value. The trainee would submit his proposal to the project coordinator and staff. They would review it and then interview the trainee. During the interview, the proposal would be logged on a standardized form which would facilitate finding the sum of MCI goods and services credits. At this point the proposal would be granted, rejected, or given back for modification. A clause in every granted proposal will be a monitoring plan so that MCI field staff can find the grantees during the apricot drying season. The grantees must also be willing to give an account of the results of their work when visited by an MCI field worker.

Trainees will be lodged and fed for the duration of the seminar at MCI expense.

Field implementation and monitoring:

Assuming that the trainees propose workable and grantable schemes, they will proceed to Afghanistan in mid-April. Many will be transported by an MCI vehicle accompanied by some of the special staff. This is critical for their future monitoring so they know exactly where the trainee was left with his sulphuring materials.

The monitoring process will proceed as described in the grant contracts. All grantees will have to rely primarily on the economic tier whence they were recruited. In other words, the small trader will be expected to use the sulphuring technology as simply another way to buy a product for a low price and sell it for a high price. The small trader has accepted many innovations in the past which he deemed profitable; eg. truck transport, electricity, plastic grain sacks, radios, etc. If he is unable

to introduce sulphuring, then it is unlikely that the technology can be readily introduced on a large scale at this level. Likewise the larger trader; if his network of traders and producers cannot integrate the technology with his influence, then it may not be acceptable at this level either. It must be remembered that in Turkey and the United States, both with a large dried fruit sector in their agricultural economies, farmers dry the fruit crop.

Because the Afghan farmer has such a narrow financial risk margin, he is being given the opportunity to experiment with the technology with as little risk as possible. Monitoring of the farmers will be more intensive, with inputs such as more sulphur tents and trays available. Field staff will stay near key farmers to assist them should it be necessary.

Evaluation of the pilot will hinge on the skill of the special field staff to keep track of all the different directions which the various trainees will go as they endeavour to profit from this technology. Corroborative surveys by MCI Quetta staff will be conducted throughout the areas of operations of the trainees as well.

Just as important will be the recording of reactions of non-participants to the technology. Both trainees and field staff will be instructed to record and relate these reactions when they are either visited by a pilot project evaluator or when being debriefed.

ANNEX 1.2 DRIED APRICOT PILOT PROJECT CALENDAR

Activity	Month (X = ten days)									
	N	D	J	F	M	A	M	J	J	A
Special staff hiring, training		XXXXX								
Contact potential trainees		XXXXXXX								
Seminar curriculum planning			X							
Seminar materials acquisition		XXXXXXXXXXX								
Conduct seminar					XX					
Transport trainees into Afghanistan						XX				
Monitoring by field and Quetta staff						XXXXX				
Evaluation of pilot							XXX			

ANNEX 1.3 STAFFING FOR DRIED APRICOT PILOT PROJECT

The staffing schedule will include two Afghan area coordinators (AC). They will be responsible for field-level management of the pilot project and staff, and will report to the Regional Manager. The AC's will be stationed at two different district offices in apricot growing districts.

Five agriculture high-school educated, (university educated preferable) will be hired as Assistant Area Coordinators (AAC). They must be able to master every facet of tree and vine husbandry and post harvest handling and processing. These staff will be the main agents for evaluation of the pilot programme efforts inside Afghanistan. They will also serve as training staff in the dried fruit sulphuring seminar in March. They may also work in other areas of cash-crop rehabilitation after apricot season. These workers should be hired and orientated by mid-January.

As assistants to the AAC's and as farm level project implementors, five Afghans will be hired for Tier One implementation and for general pilot evaluation assistance. Support staff such as guards, drivers, storekeepers, etc. will be assigned as needed to each district office.

ANNEX 1.4

PROJECT REQUIREMENTS IN MATERIALS AND SERVICES

1. Materials for 250 sulphuring tents, local purchase
2. Dried fruit packing sacks; paper or plastic, local purchase
3. Trainee sulphuring kits: sulphur, knives, pans, trivets, etc. local purchase
4. One ton of fresh apricots, local or foreign purchase
5. Food and lodging for two weeks for 25-35 trainees at MCI Quetta
6. Materials and trainee transport from Quetta to project areas

DRIED APRICOT PILOT PROJECT BUDGET

Item/Activity	Est. Cost $US
One ton fresh apricots, airfreight	15,000
250 sulphur tents	12,500
Sulphuring kits	1,000
Dried fruit sacks (new)	500
Seminar costs	3,000
Project staff	2,500
Trainee subsidy	6,000
TOTAL	40,000

ANNEX 2

SUN DRYING OF FRUIT

(Draft, not for distribution)

PREPARED BY

RICHARD WELLS

OF

HIGH VALUE HORTICULTURE PLC

FOR

DEVELOPMENT ALTERNATIVES, INC.

AND THE

OFFICE OF THE US AID REPRESENTATIVE TO AFGHANISTAN

AUGUST 1990

SUN DRYING FRUITS

INTRODUCTION

Sun drying of fruits is one of the oldest forms of food preservation known to man. The term shade-drying is also applied, when the fruit is dried out of direct sunlight (for example, in the shade). In Afghanistan, the majority of raisins are red raisins dried in the sun. The high quality green raisins are dried in the shade.

This appendix shows the basic steps followed in the drying of grapes (for raisins) and apricots.

Sulphuring is not usually practiced in the drying of grapes in Afghanistan. Attached are the illustrations of "On Farm Equipment" suitable for the drying and fumigating of apricots.

GRAPES

The process is carried out according to the flow chart below:-

HARVEST -> TREATMENT -> DRYING -> SWEATING -> SCREENING -> STEMMING -> STRIGGING

SCREENING -> STEM-CAPPING -> ASPIRATION -> WASHING -> INSPECTION -> GRADING -> PACKING -> METAL DETECTION -> FUMIGATION

Harvesting

The maturity of the grape will affect the quality and yield of the final raisin. Research has shown that the best results are obtained when the juice of the grape has a brix of between 24° and 28°. (Brix is a measure of the sugar content).

Prior to harvesting, it is necessary to smooth the ground between the vines in preparation for the drying trays. Trays are placed between the vines and tilted towards the south since the rows run east-west; then the grapes will not be shaded in the morning and afternoon. The grapes, in their bunches, are distributed directly onto the trays, approximately 10 kg per tray at a rate of 17 kg per square meter.

Treatment

It may be desirable to treat the grapes prior to drying in one or the other of the following ways:

(a) Dipping in 0.6 percent sodium hydroxide or sodium carbonate solution at 95°C for about five seconds. They are then rinsed in cold water and put onto the trays.

(b) Oil dipping - a solution of 3 percent sodium bicarbonate is prepared and a film of edible oil floated on it. The grapes are dunked in the solution for between 30 and 180 seconds. The solution may be hot or cold, and drying takes place as described below.

(c) Sulphur bleached raisins: The grapes are dipped as for soda-dipped fruit and then spread on the trays and sulphured for 2 - 4 hours (1.5 kg - 2.0 kg of sulphur being used per ton of fruit).

Drying

The trays remain in the original position until the fruit is partially dried, taking about 4 days. They are then turned so that the top of the tray becomes the bottom. After about 10 days the top layer of grapes will become shrivelled and the grapes are again turned. Once the grapes are about 66 percent dry the trays are collected and stacked in the shade. They remain here for about 7-10 days for curing.

In the case of sulphur bleached fruit, the fruit is allowed to stand in the sun for 1 day, and then the grapes are turned. At the end of the second day, the trays are stacked. Drying is completed in the sack to avoid over-exposure to the sun. After 10 days the product is again turned. Drying in this manner will take several weeks.

Sweating

When juice cannot be expressed if the fruit is squeezed between the fingers, the fruit is considered cured and will be at between 15 percent and 17 percent moisture. The clusters are placed in sweat boxes where the moisture equalizes over a period of about 3 weeks. Sweat boxes are constructed of pine, and accommodate between 70 to 100 kg of product.

Drying Ratio

75 percent fresh fruit 25 percent dried fruit. 4:1

Screening

The raisins are taken from the sweat boxes and fed into a rotary/aspirated screen to remove extraneous matter.

Stemming or Strigging

The fruit is removed mechanically from the panicles by a "strigging" action. Should the moisture content of the fruit exceed 12 percent, the stems will be too soggy and may clog the machine.

Screening/Aspiration

A further screening/aspiration process takes place to remove any vestiges of stems remaining.

Stem Capping and Aspiration

The stem cap is the small stem which is left adhering to the fruit after stigging; these are removed by aspiration. If the moisture content is too high this may prove difficult. Further drying can be achieved by using a stove or cabinet at 50-55°C for 3-4 hours.

Washing

A rapid rinse finally cleans the fruit, during which time the moisture will increase to up to 17 percent.

Inspection

The dewatered fruit is manually inspected to remove any residual extraneous matter, stem caps and defective fruit.

Grading

Screening may be carried out if customer specifications demand restricted size ranges.

Packaging

For catering and industrial uses, fruit is normally packed in corrugated cardboard cartons which have been lined with tissue paper. Pack weights of 12.5 - 15.0 kg are usual, and the cartons are glued or tape sealed. Staples must not be used.

For retail purposes a 500 gm pillow pack is required. For small quantities it is possible to obtain performed and printed sachets which may be hand-filled and heat sealed. Larger runs will be packed using form and fill packaging machines. The sachets will be packed in corrugated cardboard cartons with probably 20 per carton. Some customers may also demand a cardboard display carton as well.

Metal Detection

It is a good practice to place permanent magnets at strategic points on the post drying process line; the packed product should be subjected to examination by an electronic metal detector.

Fumigation

Fumigation is carried out to prevent insect damage and contamination. This must be carried out at regular intervals by use of Methyl Bromide in a fumigation chamber, at a rate of 2.1 kg Methyl Bromide per 100 cubic meters of chamber volume.

The product in sweat boxes and final packs will be subjected to this treatment.

DATA ON CONSTRUCTION OF FUMIGATING CHAMBER

1. Construction

The chamber may be either portable or fixed. If portable it can be constructed of light timber to minimize weight, and should not exceed 300 cu. ft. All joints must be tightly sealed with the structure anchored firmly to a flat ground surface.

Permanent structures can be constructed of masonry materials with gabled roof and concrete floor. This type should be sized at maximum of 1,000 cubic feet, the dimensions being variable as to length, width and height, to best accommodate the size of pack in which they are to be loaded. The total cubic capacity of the boxes (for example "sweat boxes" where applicable, packed cartons, or trucks of trays) must comply with the 1,000 cu ft limit.

It is necessary to vent the chambers rapidly at the end of the fumigation period; therefore, doors are installed at both ends. Some chambers are fitted with an extractor fan at the end opposite the loading door. The structure must be absolutely airtight.

It may be possible to have dual use of such a chamber, or chambers, for the purpose of sulphuring trays of the product which call for sulphiting. The dimensions, however, must be arranged to accommodate the dryer trucks loaded with drying trays of the product.

2. Fumigants

The most common type used is methyl bromide. A 1,000 cu. ft. chamber will require a charge of 1 pound, fed into the chamber by an applicator, normally supplied by the dealer. As the fumigant is heavier than air, it must be introduced at the top of the chamber.

3. Exposure Time

Dependent upon temperature, fumigation must be from 15 to 24 hours to be effective. The frequency of fumigating will vary from location to location, according to the level of possible infestation and type of name.

4. Capacity

Subject to the pack size and method of stacking, a 1,000 cu. ft. chamber should hold 3 to 4 tons of produce per charge.

5. Residual Levels

The residual level of bromide in the product itself should not exceed 20 ppm, with 10 ppm being the safer level.

APRICOTS

Fumigating apricots with Sulphur dioxide (SO_2):

a) Controls fungi and determinal micro organisms which attack the fruit during the first phase of drying;

b) Speeds up the drying process;

c) Prevents enzymatic browning;

d) Lengthens storage life; and

e) Helps prevents lose of nutritional value;

The process is carried out according to the flow chart below:

HARVEST -> CUTTING & PITTING -> BLANCHING -> SULPHURING -> DRYING -> CURING ->

INSPECTION -> GRADING -> CLEANING -> 2ND SULPHURING -> INSPECTION -> PACKING -> METAL DETECTION -> FUMIGATION

Harvesting

Fruits will be harvested when slightly riper than desirable for canning or freezing operations.

Cutting and Pitting

It is not usual to wash or peel apricots for drying so the fruit is taken directly to the cutting sheds. Cutting sheds are basically canopies which afford protection from the sun for the workers and give adequate ventilation; metal roofs should be avoided. The cutting tables are in sections: 750 mm high,

2,500mm long and 900mm wide (each section giving space for 8 workers). The fruit is cut completely around the suture by means of a sharp knife, separated and the pit removed. A clean cut is essential if the best quality and; the best price are to be obtained. From 6 percent to 10 percent is lost in pitting.

Whole apricots may be dried; these are usually subjected to lye dipping and prolonged sulphuring if needed.

Blanching

Steam blanching will improve fruit cleanliness, reduce drying times, aid sulphur dioxide retention, and speed rehydration. However, it is not usual for the fruit to be blanched as the equipment required is relatively sophisticated.

Sulphuring

Trays of approximately 900 mm x 1,800 mm are made from pine or redwood. The bottom is made of boards 150mm wide and 6 mm thick. The cut fruit is placed cut side up at a rate of approximately 1 kg per 0.1 sq. meter, (for example approximately 16 kg per tray). The trays are stacked on trolleys, and alternate trays overhang by about 150 mm to aid the circulation of sulphur dioxide. The trolleys are placed in the sulphur house and remain for 2-3 hours to give around 2,000 ppm of sulphur dioxide to the product. To achieve this, 1.5 to 2.0 kg of sulphur per ton of fruit is required. The apricots should be sulphured as soon as possible after cutting to prevent darkening and the retention of Vitamin C.

Drying

Immediately after sulphuring, the trays are taken to the drying yard. The site is selected so that the trays will be exposed to the prevailing winds; a gentle slope is advantageous. Approximately 1 hectare is required for every 20 hectares of orchard. The trays are placed on racks raised about 300 mm from the ground and exposed to the sun for 1 to 7 days, until the fruit contains about 18 percent moisture and is soft and pliable, but not sticky.

Drying Ratio

82 percent fresh fruit 18 percent dried fruit. 5.5:1

Curing

The fruit is removed from the trays, and discolored and insect infested pieces are discarded and placed in sweat boxes. Very wet fruit is returned to the drying yard for further drying. The moisture equalizes in the sweat boxes: this process takes from one to three weeks.

Inspection

The fruit is manually inspected to remove soil, mouldy halves, and insect infestation.

Grading

The apricots are size graded, there being six grades:

No. 1	Jumbo	> 35mm diameter
No. 2	Extra Fancy	32 - 35mm diameter
No. 3	Fancy	28.5 - 32mm diameter
Mo. 4	Extra Choice	25mm - 28.5mm diameter
No. 5	Choice	21mm - 25mm diameter
No. 6	Standard	< 21mm diameter

Cleaning

The graded fruit is passed through a rotary washer during which the moisture content increases approximately 10 percent.

2nd Sulphuring

This is a repeat of the earlier operation, tray loading being about 50 - 75mm of fruit in depth. Exposure time is around 4 hours.

Inspection, Packing, Metal Detection, and Fumigation

These processes are the same as previously described in relation to grapes. The retail pack preferred is 250 gm as opposed to 500 gm for vine fruits.

Process Equipment

As can be gathered from the description of the process, most of the equipment required is simple and best manufactured locally.

However, washing, stemming, and pitting machines are available from:

a) IMC,
Breedstraat 3,
Sint Niklaas-Waas
Belgium.

b) Herbort GmbH.,
Hamburger strasse 268,
3300 Braunschweig
W. Germany (UK agents Process Applications 0284 767601)

c) Bead Engineering Ltd.,
Kings Lynn
Norfolk 0553 763177

d) Peter Holland Limited
St. Peter's Hill
Stamford
Lincolnshire 0780 52086

e) Goring Kerr, (Metal Detectors)
Vale Road
Windsor
Berks 0753 869351

f) Gunson's Sortex Limited (Aspiration)
Fairfield Road
London 081 980 4888

solar tent

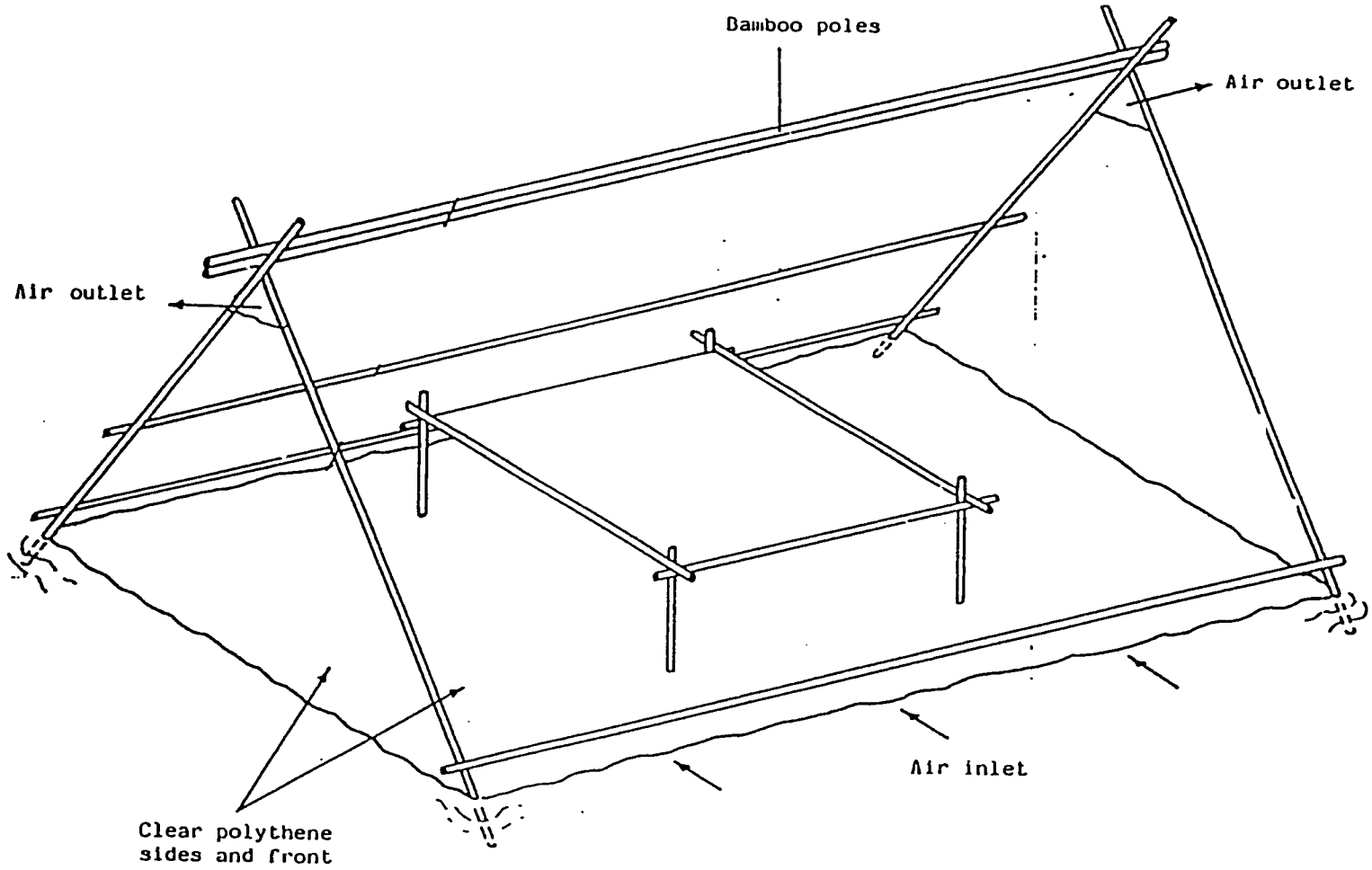
Bamboo poles
Air outlet
Air outlet
Air inlet
Clear polythene
sides and front

modified solar tent

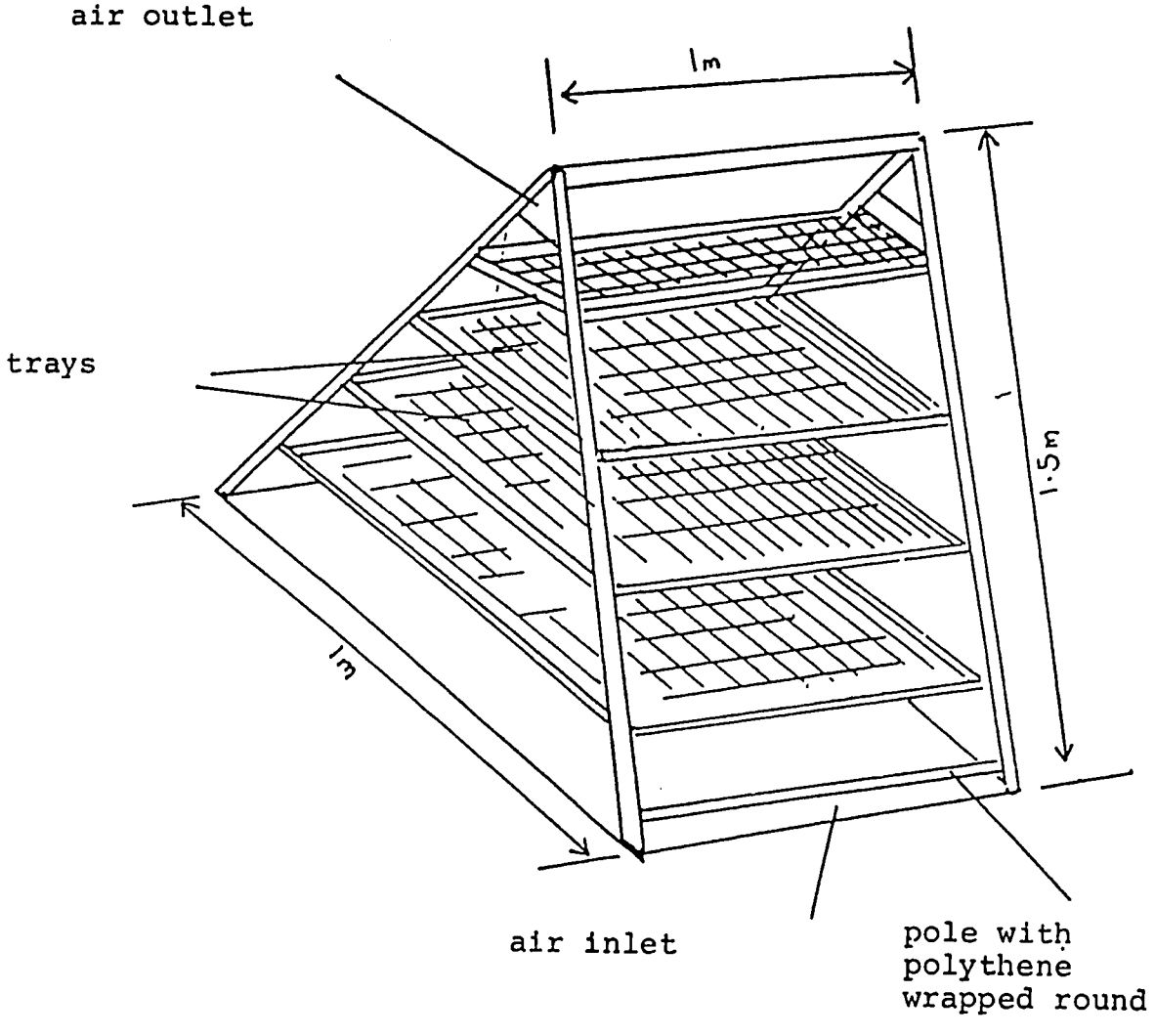

excellent solar dryer

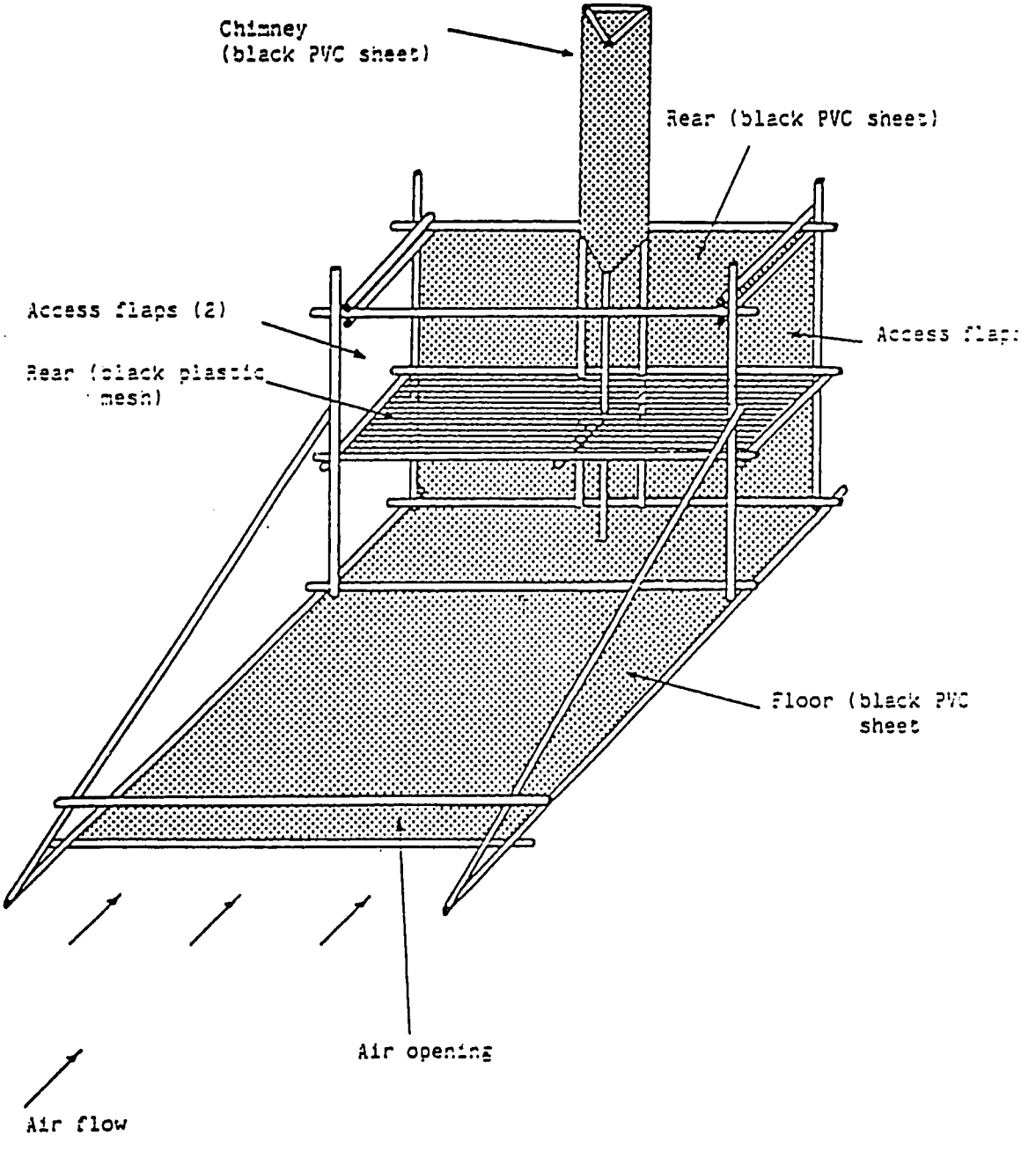

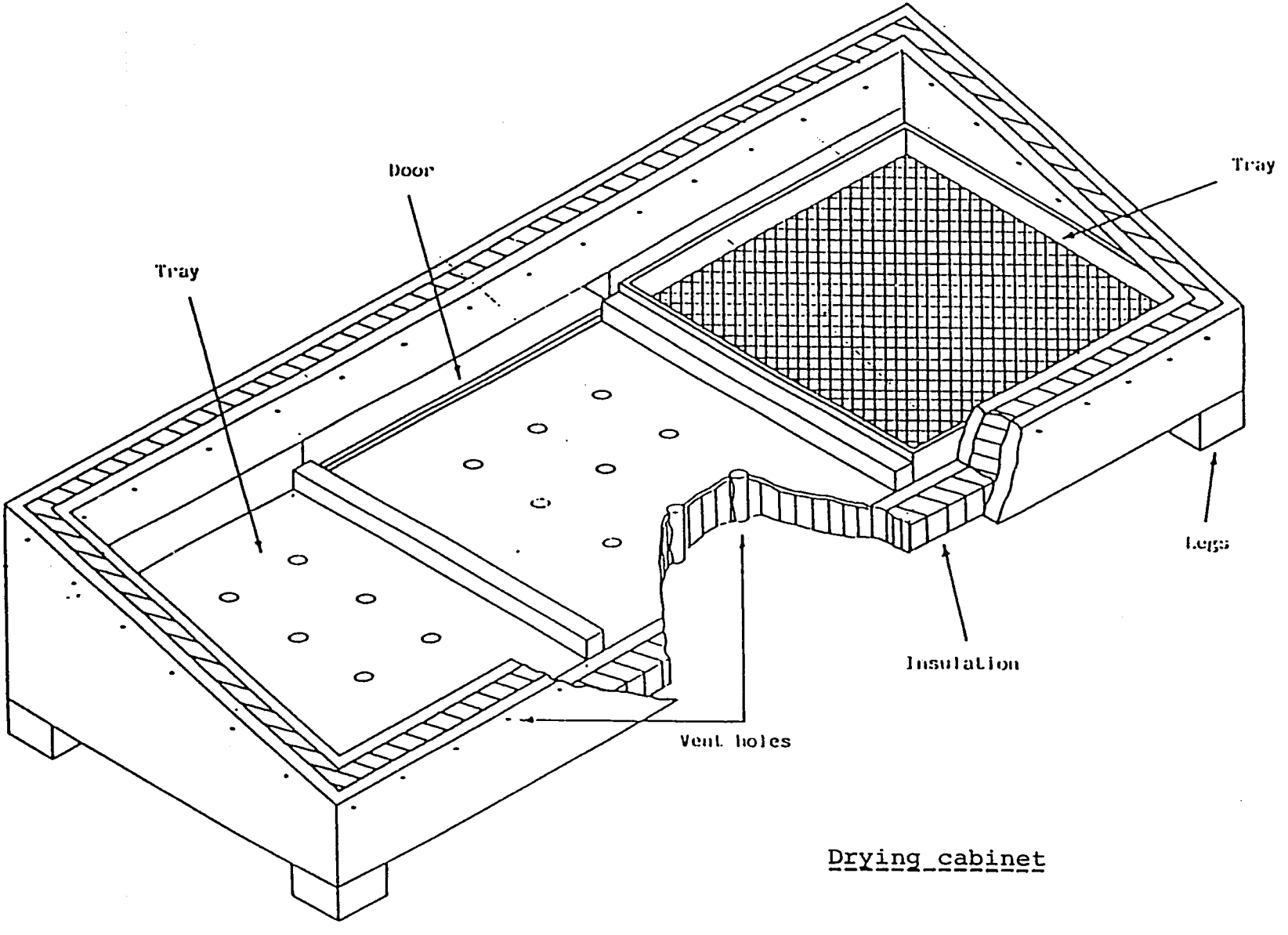

Drying cabinet

Sulphuring Cabinet 1

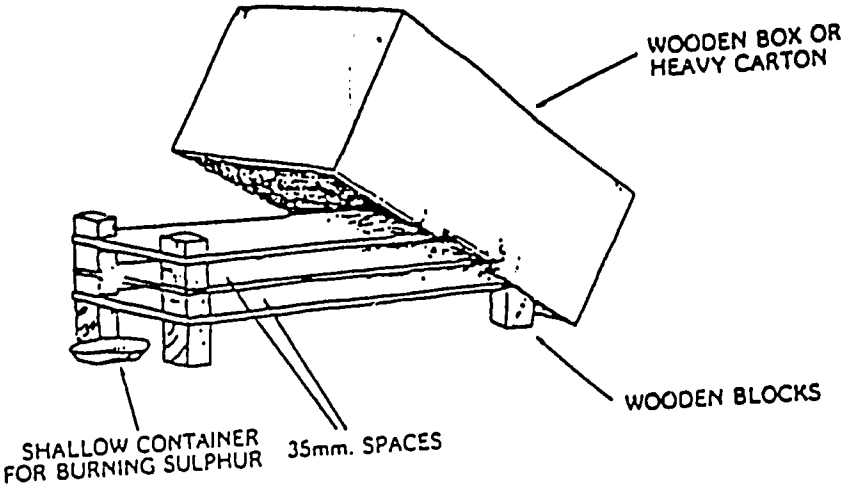

Sulphuring Cabinet 2

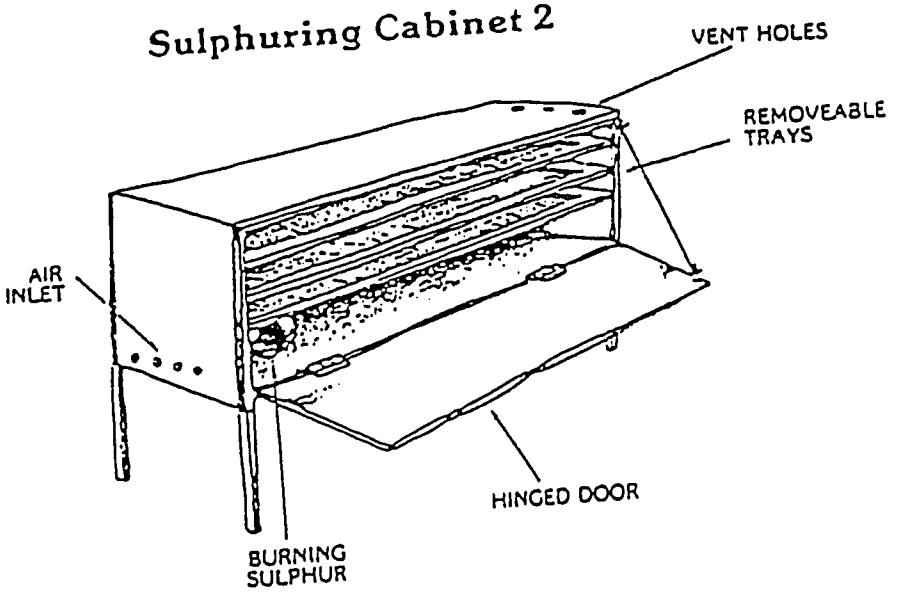

simple sulfuring tent

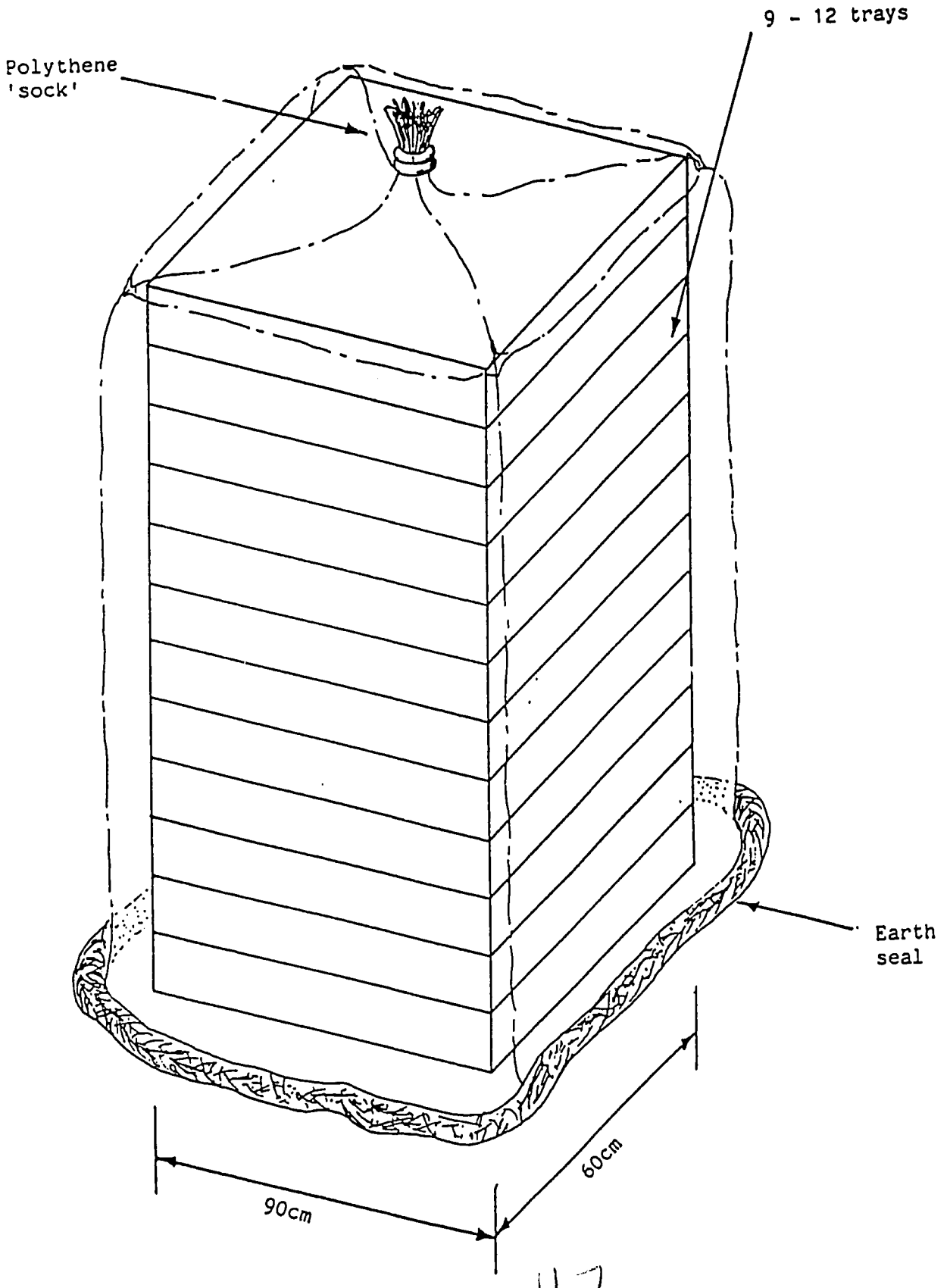

SKETCH OF SIMPLE SULPHURING/DRYING TENT
USING LOCALLY AVAILABLE MATERIALS

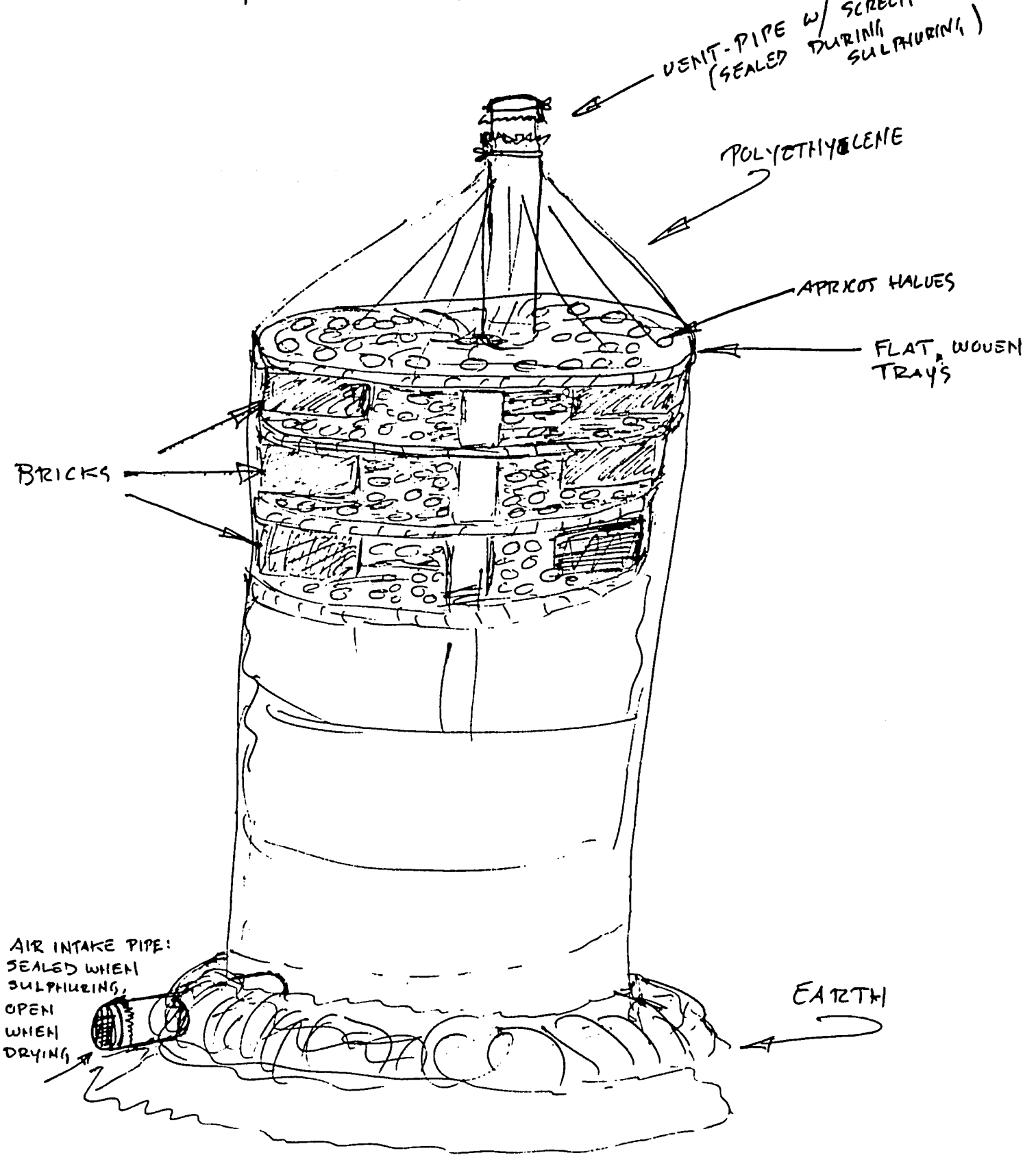

PLACE IN SUNNY, NON-SHADED AREA, CONVENIENT TO ORCHARD

REFERENCES

Bajoi, Abdul H. ed. (1989) Annual Research Programme: Rabi 1989-1990. Agricultural Research Institute Sariab, Quetta

Growing Apricots for Home Use (1977) USDA Home and Garden Bulletin #4

Handling, Transportation and Storage of Fruits and Vegetables AVI Publ. Co. NY,NY.

Holdsworth, S.D. (1983) The Preservation of Fruit and Vegetable Products Macmillan Press, London

Home Fruit Drying (1982) The Kansas City Gas Service Co. Consumer Assistance Bulletin

High Value Horticulture, Inc. (1990) Afghan Cash Crops Feasibility Study (Draft) Development Alternatives, Inc. Peshawar.

International Workshop on Apricot Culture and Decline, 1977, 1988.

Janick, J (1975) Advances in Fruit Breeding Apricot chapter.

The Swedish Committee for Afghanistan (1990) The Agricultural Survey of Afghanistan, 6th Report.

Woodruff, J.G. et al (1986) Commercial Fruit Processing AVI Publ. Co. Westport, Conn.

Ziraat Baluchistan Quarterly Jan-March vol.17 no.1. (Urdu)

PERSONS MET

Dr. Abdul Wakil, Senior advisor, DAI, Peshawar

Dr. Bajoi, Director, Pakistan Agricultural Research Institute, Sariab, Quetta

Dr. Nek Tareen, Pakistan Agricultural Research Institute, Sariab, Quetta

Mr. Ikramul Haq, Economic Botanist, Pakistan Agricultural Research Institute, Sariab, Quetta

Mr. Yusuf Kohistani, Economist, DAI, Peshawar

Pakistani dried fruit traders, Quetta

Afghan fruit growers, Sorkhab refugee camp near Quetta.

Mr. G A Lewis, Chief Agricultural Development Officer, USAID Islamabad.

Mr. Phil Church, Agricultural Development Officer, USAID Islamabad.

Mr. A. Rude, USAID Islamabad.

Mr. Edgar Stem, Tufts University, USA.

Mr. M. Jespersen, MCI, Quetta.

Mr. Salam Jan, MCI, Quetta.

Mr. Rahmatullah, MCI, Quetta.

Mr. Wazir Mohammad, Fruit grower, Quetta

Mr. Sadhu Ram, Produce trader, Quetta

Fruit marketing staff, Agha Khan Rural Support Programme, Gilgit

TERMINOLOGY PECULIAR TO CUMIN CROP CONSULTANTS (CUMINOLOGISTS)

I am a member of the Cuminist Party.
The Pakistani and Afghan traders should be more ecuminical.
Guess who's cumin to dinner?
Cuminology
Cuminomics
The Ayatollah Cumini
Cuminolics Anonymous.
The cultivation of cumin requires a great deal of acumin.