PD-ABJ-188
90029

A.I.D. EVALUATION SUMMARY - PART I

BEFORE FILLING OUT THIS FORM, READ THE ATTACHED INSTRUCTIONS
? USE LETTER QUALITY TYPE OR DOT MATRIX TYPE

IDENTIFICATION DATA

A. Reporting A.I.D. Unit:
Mission or AID/W Office USAID/Mozambique
(ES# _____)

B. Was Evaluation Scheduled in Current FY Annual Evaluation Plan?
Yes [X] Slipped [ ] Ad Hoc [ ]
Evaluation Plan Submission Date: FY ___ Q ___

C. Evaluation Timing
Interim [X] Final [ ]
Ex Post [ ] Other [ ]

D. Activity or Activities Evaluated (List the following information for project(s) or program(s) evaluated. If not applicable, fill in the evaluation report title and date of the evaluation.)

Project No.	Project Program Title	First PROG or Equivalent (FY)	Most Recent PACD (Mo./Yr.)	Planned LOP Cost (000)	Amount Obligated to Date (000)
690-0247.56	Regional Rail Systems Support	1988	12/94	55,500	55,500

ACTIONS

E. Action Decisions Approved By Mission or AID/W Office Director

Action(s) Required	Name of Officer Responsible for Action	Date Action to be Completed
1. Locomotive Technical Assistance team will become the responsibility of and under the authority of the HC Contractor, Enge-Rio. In addition to improving the availability rate of the locomotives, the contractor will address the issues of quality control in the maintenance effort. LBI contract will be amended to include only TA for Finance and Procurement.	USAID Contracting Officer	01/01/92
2. Workshop training plan responsibility under Enge-Rio and contracted with a regional railroad training school.	USAID Contracting Officer	01/01/92
3. Apply immediately an off-the shelf accounting package. Ensure that TA team develops a functioning and sustainable accounts system.	USAID Project Officer	01/01/92 06/01/92
4. Assess the cost effectiveness of CFM workshops overhauling the old fleet of GE U20-C locomotives.	USAID Project	03/01/92
5. Investigate, and if found appropriate, plan the phase out of the workshop functions for major locomotive overhauls and rebuilds.	USAID Project Officer	03/01/92
6. Design and implement a revised facility and procedure for all maintenance of the locomotive fleet to be carried out in the running shed.	USAID Project Officer	01/01/92
7. Reduce warehouse facilities and inventories from eight locations to two.	USAID Project Officer	03/01/92

Attach extra sheet if necessary

APPROVALS

F. Date Of Mission Or AID/W Office Review Of Evaluation: (Month) 12 (Day) 1 (Year) 91

G. Approvals of Evaluation Summary And Action Decisions

	Project/Program Officer	Representative of Borrower/Grantee	Evaluation Officer	Mission or AID/W Office Director
Name (Typed)	Peter S. Argo	Mario A. Dimande	Charles North	Roger D. Carlson
Signature	[signature]	See Section L	[signature]	[signature]
Date	March 25, 1994		May 20, 1994	

ABSTRACT

Evaluation Abstract (Do not exceed the space provided)

The project aim is to strengthen and expand the capacity and operational efficiency of Mozambique Railways (CFM, EE). The project is being implemented through the Ministry of Transport and Communications and CFM,EE, a parastatal company. This first of three mid-project evaluations was conducted on the basis of a review of project documents, visits to CFM(S) Maputo and CFM(C) Beira, and interviews with project personnel. The major findings are:

* CFM currently has a number of functions, none of them well carried out, that are not economic for a transport company of its size. These should be phased out and contracted with the private sector or with other, larger and more efficient, railways of the Southern Africa region.

* Restructuring of the organization is essential. Management functions need to be decentralized, at the same time that some of the support functions require greater centralization (if they are not to be contracted out).

* If desirable decisions are made and desirable actions are taken, CFM financial performance could be substantially improved within the span of one year, even in the absence of the further possible action of fully privatizing the firm or one or more of its several operating entities.

COSTS

1. Evaluation Costs

1. Evaluation Team Name	Affiliation	Contract Number OR TDY Person Days	Contract Cost OR TDY Cost (U.S. $)	Source of Func
Donald J. Fritz	Nathan Association	24	$300,000	Project
Gary R. Parsons	Burlington	24	over life of	
Bruce Gustafson	Burlington	24	Project	

2. Mission/Office Professional Staff Person-Days (Estimate) 20

3. Borrower/Grantee Professional Staff Person-Days (Estimate) 7

A.). EVALUATION SUMMARY - PART II

SUMMARY

J Summary of Evaluation Findings Conclusions and Recommendations (Try not to exceed the three (3) pages provided. Address the following items.

- Purpose of evaluation and methodology used
- Purpose of activity(ies) evaluated
- Findings and conclusions (relate to questions)
- Principal recommendations
- Lessons learned

Mission or Office	Date This Summary Prepared.	Title And Date Of Full Evaluation Report

EXECUTIVE SUMMARY: FINDINGS AND RECOMMENDATIONS

Findings

The mid-term evaluation team reviewed the objectives of the Mozambique Component of the Regional Railway Systems Support (RRSS) Project, the designs of the project and its various elements, the progress that has been made as of October 1991 in attaining the objectives, and the plans of the RRSS technical assistance teams for fully accomplishing project objectives within the time frame of the project. The principal findings are summarized below:

(1) CFM(S) is undertaking locomotive maintenance and repair activities which are inherently uneconomic for an organization its size. This is particularly true of the locomotive rebuilding efforts beings financed under the project, but it is also uneconomic (and therefore undesirable for a commercial enterprise, such as CFM(S) now is) for CFM(S) to continue to attempt to carry out periodic heavy locomotive maintenance, such as overhauls, and major locomotive repairs. Fleets of hundreds of locomotives are required to make such locomotive maintenance and repair operations economic.

(2) The CFM(S) locomotive diesel shed is fairly well operated, even at present, and could be improved to effectively carry out all CFM(S) potentially economic locomotive maintenance activities, at what would probably be a relatively modest cost (in comparison to the overall cost of the RRSS locomotive maintenance elements). Limiting CFM(S) locomotive maintenance to only those activities which could be carried out by the railway economically, would mean that periodic heavy maintenance would need to be carried out elsewhere, probably on a 4-year to 6-year cycle for individual locomotives. Recent improvement in the political relations between the Republic of South Africa (RSA) and other countries of the Southern Africa region may make it desirable to contract out heavy locomotive maintenance and major repair work to the RSA railways (Spoornet). Another option for contracting out some of this work might be the National Railways of Zimbabwe (NRZ), which operates a fleet of around 300 locomotives. Unless some arrangements of this sort are entered into by CFM(S), it will be difficult for the railway to recover the full cost of locomotive maintenance and repair.

(3) With some operationally and financially desirable changes in CFM(S) railway operations, specifically permitting or requiring Spoornet and NRZ to operate their own locomotives and train consists to the port of Maputo, CFM(S) requirements for line-haul locomotives could decline in future years, even while traffic volumes are increasing. CFM(S) has actually been subsidizing the international trade of RSA, Zimbabwe, and Swaziland for some years, as costs of accommodating the trade freight of these countries have not been fully recoverable through the railway's revenue from these same services. The subsidy has beenespecially heavy where RSA is concerned, as several CFM(S) locomotives have been heavily damaged or destroyed while serving RSA traffic (mainly) on the Ressano Garcia Line. Requiring Spoornet and NRZ to operate their own locomotives and wagons on the CFM(S) rail lines to

Maputo, with their own crews, to haul their own freight, could bring an immediate halt to the subsidization, provided only that "tolls" for operation were sufficiently high to cover all permanent way capital and maintenance costs. This operational change could also largely eliminate CFM(S) liability for lost Spoornet wagon parts and the associated high rental charges for failing to return the wagons within stipulated periods of time.

(4) The ten locomotives being acquired under the amended RRSS are not appropriate for CFM(S) operations for a number of reasons. Most importantly, the 1960's technology that they represent is neither as reliable as a number of other locomotive acquisition options, nor are they as fuel-effective and overall cost-effective. Another important consideration is flexibility of locomotive employment. As indicated above, CFM(S) line-haul locomotive requirements may not increase in the future; shunting locomotive requirements can be expected to increase, however, and it probably is desirable that CFM(S) gradually replace its current fleet of 6-axle locomotives with light, 4-axle, low maintenance, cost-efficient, flexible-use locomotives, that are already available. (It may only be possible for CFM(S) to convert its fleet to what would be ideally suited to future financially and operationally optimal operations, over a period of 15 to 20 years, as more than 48 locomotives are now on order for CFM railways, some number of which will need to be added to the CFM(S) fleet.)

(5) The Louis Berger International (LBI) and Enge-Rio locomotive maintenance technical assistance teams, which are both being financed under the RRSS, have been effective in some areas and ineffective in others. Where the locomotive rebuilding is concerned, especially, work has not been well done to date, and the program is also somewhat behind schedule. From what was stated under (1) above, it may be undesirable to continue this element of the RRSS. At the very least, the poor operating results and service records of the two locomotives, for which the rebuilding effort has been "completed", make it necessary to send them back to the workshop for further work, in order to attain acceptable levels of locomotive availability and reliability (at present, CFM(S) does not dare to send either of these "rebuilt" locomotives more than short distances from Maputo for fear of an on-line breakdown). Other than the rebuilding effort, some improvement is required in the coordination of the two technical assistance teams, and clear and unambiguous lines of authority and responsibility need to be established. Some technical assistance project goals also require reexamination, particularly in regard to developing the role of the locomotive diesel shed and in regard to the training of staff.

(6) The accounts of CFM(S) and of its parent organization, CFM, do not exist in any usable form. An attempt was recently made to examine historical financial information to produce a balance sheet as of the beginning of 1989; regardless of how accurately this might have been done using accounting information, it is difficult to see how this effort might be useful, since the fair market value of many CFM assets probably has little or no relationship to the accounting values which might be agreed upon, and there have been no substantive changes in the supporting accounting systems. Very little appears to have been accomplished by the technical RRSS assistance teams charged with responsibility for improving the accounts of CFM and CFM(S). The technical assistance team is proposing to develop a standard costing approach in CFM, but this is probably not desirable in the short term, at least, and reliance on an average costing approach would probably be better suited to CFM staff capabilities and potentials, as well as to the status of the CFM information system, which essentially does not yet exist as a system at all. In addition, some improvement is required in the coordination of the two technical

assistance teams, and clear and unambiguous lines of authority and responsibility need to be established.

(7) CFM(S) is too small an organization to justify development of a full financial department or even of an accounts section, and the small number of qualified and partially qualified personnel (individuals with accounting and/or economics training) in the entire CFM organization are insufficient to staff more than a single financial services office. It therefore appears desirable, from the standpoint of both staff availability and economics, that a single office be developed at the CFM levels to handle all accounts and financial support functions of the enterprise, and that qualified and partially qualified persons within the organization be concentrated within this office, and not dispersed (essentially wasted) among the several operating entities of CFM. The technical assistance team has in mind essentially continuing the current structure and procedures of CFM and CFM(S) accounts and financial services functions, which in the view of the evaluation team is not an appropriate strategy for addressing the problem. If poor communications should make it difficult or impossible for a centralized accounts and financial support office to function effectively, then one or another of the CFM operating entities should make arrangements to contract out the accounts/financial support function to appropriate firms in the Mozambican private sector. In any case, it is not desirable that attempts should be made to develop a separate accounts/financial support office in CFM(S). (The only possible exception to this would be if CFM were leased to a private investor or investors, in which case it would be up to the new operator(s) to identify whether or not an accounts/financial support function could be economically established within the firm.)

(8) Although a CFM planning directorate was established as a separate entity in April 1991, and an appropriate person was appointed to head this directorate, it does not appear that much else has been done to develop this critical function, so lacking in CFM at present. CFM needs first of all to define the role of this directorate. Since the enterprise lacks both an information system and an implementation monitoring body, it is probably desirable that the planning directorate's role be rather broadly defined to include development of a database for the enterprise and the establishment of an implementation monitoring function, as well as the development of a strictly planning function.

(9) Groundwork for training of workshop and financial department staff has been laid through preparation for and/or conduct of staff audits for these offices, and it appears to the evaluation team that the audit may have been carefully designed and successfully carried out by the technical assistance team. Other than this effort, however, it does not appear that much has been accomplished in regard to training. A proposed training program for financial services staff would appear to tend to perpetuate some of the inadequacies of the current CFM financial system and procedures, such as they are, and the team also has some concern that training programs being readied for conduct may extend to areas that are not readily usable by the trainees or by CFM as an institution, as for example the proposed introduction of standard costing, discussed in (6) above. The technical assistance teams have not yet investigated the possibility of using the regional railway training school at Maputo, or other local training facility, to contribute at all to the overall training effort. At the very least, it may be desirable to consider the school or another local facility for the teaching of English to some key staff who will need to deal with English speakers and/or with documentation in the English language. It is also desirable that training programs that are being designed under the RRSS be made into permanent programs, as otherwise the effects of the training might be largely lost over time, and sustainable operations improvements must be the goal. The CFM human resources department indicates that they would like to assign trainees to any courses to be provided under RRSS, in order that these trainees could eventually take over the courses and train future CFM staff. In the view of

the evaluation team, this training of future trainers is highly desirable, and should be made an objective of the technical assistance training effort, with the understanding that it is entirely up to CFM find suitable individuals to be trained as trainers.

(10) Development of an inventory control system to monitor the receipt, stocking, and disbursement of diesel parts covered by the USAID project is underway. Plans for enhancements to the system include integration within the overall accounting system, inclusion of inventory values, and the expansion to cover all CFM material stock.

ATTACHMENTS

K. Attachments (List attachments submitted with this Evaluation Summary. Always attach copy of full evaluation report, even if one was submitted. Other attach studies, surveys, etc. from 'on-going' evaluation, if relevant to the evaluation report.)

COMMENTS

L. Comments By Mission, AID/W Office and Borrower/Grantee On Full Report

Management of CFM has not signed previous copies of this evaluation, and will likely not do so. They have expressed disagreement with several of the findings, but have not submitted written comments for inclusion into this PES.

The Choice of the U20-C Locomotive Technology

It was always recognized that the U20-C technology was old (ie, generator vs. alternator). This evaluation pointed out other areas in which locomotive technology has made rapid improvements in recent years, such as microprocessor control for wheel slip detection and fuel supply regulation. At the time of procurement, aware that newer technologies existed, CFM and USAID, based on the advice of railroad consultants and previous experience with locomotive procurement throughout Africa, determined that the U20-C was appropriate and cost effective in the Mozambique environment. A significant change in technology, while producing a more efficient locomotive, would also have required a major change in spare parts inventory, maintenance practices, and training in maintenance procedures. The technical depth of the CFM Workshop was not, and is still not, considered sufficient to introduce the required changes at this time.

The Choice to Rehabilitate the Existing U20-C Fleet

The choice to rehab/rebuild a locomotive is predicated on a) the need for additional motive power, b) cost effective capacity of the existing workshop, and c) the availability of existing locomotive hulks and components in suitable shape for rehabilitation. The project design and subsequent amendment identified that traffic growth will be sufficient to warrant the increased size in the locomotive fleet. Furthermore, CFM has a sizable fleet of retired locomotives that are candidates for rebuilding. Given the inefficient operations of the workshops, (discussed below), CFM and USAID will consider the alternative of contracting out to other regional workshops this project component.

Workshop Operations

The evaluation rightfully questions the cost effectiveness of the CFM workshops. The management and quality control of the workshop are not now able to produce a reliable and usable rebuilt locomotive. The project design (1988) could not consider the alternative of contracting the locomotive rebuilding operations out to South Africa. In view of the recent political changes within the region and the changing attitude toward utilizing the industrial capacity of South Africa, CFM and USAID must determine which workshop functions can efficiently and effectively be carried out in the CFM workshops (for example up to an eight-year overhaul) and develop procedures for contracting out the remainder.

Consolidation of the Accounts and Financial Support Functions

USAID accepts the idea of separating the accounting and financial functions and services from the accounting and financial management activities. The in-house capacity of CFM is too thin to spread these functions over several offices, duplicating efforts. The accounting functions can be carried out by any office or firm, as long as assurances of data reliability and accuracy are present, leaving CFM management the responsibility for managerial decisions.

XD-ABJ-188-A
90030

REGIONAL RAIL SYSTEMS SUPPORT PROJECT 690-0247

Midterm Evaluation

Mozambique Component

SUBMITTED TO
U.S. Agency for International Development

PREPARED BY
Bruce D. Gustafason
Gary R. Parsons
Burlington Northern Railroad

Donald J. Fritz
Nathan Associates Inc.
Economic and Management Consultants
Arlington, Virginia

October 1991

Contents

Executive Summary 1
Findings 1
Recommendations 4

1. Introduction 7
Mozambique Component of Regional Railway Systems Support Project 7
Evaluation of Mozambique Component 8

2. Economics of CFM(S) Railway Operations 9
CFM(S) Railway System 9
Ressano Garcia Line 10
Goba Line 10
Limpopo Line 11

3. CFM(S) Locomotive Maintenance Program 13
CFM(S) Locomotive Fleet and Its Use 13
Locomotive Maintenance Program 13
Recommendation 15

4. CFM(S) Maputo Workshop and Diesel Shed 17
Maputo Workshop 17
Diesel Shed 17
Maintenance Procedures 18
Progress Against the Schedule 19
Recommendations 19

5. Locomotive Maintenance Manpower Development and Incentive 21
Objectives of the Locomotive Manpower Development and Incentive Program 21
Recommendations 22

6. Acquisition and Allocation of New Locomotives 23
Locomotive Maintenance Facilities 23
Locomotive Allocation 24
Recommendations 24

7. General Accounting at CFM(DG) and CFM(S) 25
Background 25
Project Requirements 25
Project Status 25
Consultant Evaluation 27
Recommendations 28

Contents (*continued*)

8. Finance and Support Functions 35
   Background 35
   Project Requirements 35
   Project Status 35
   Consultant Evaluation 36
   Recommendations 36

9. Finance Department Manpower Development and Incentives 39
   Background 39
   Manpower Development 39
   Incentives 40

10. Inventory Control 41
   Background 41
   Project Requirements 41
   Project Status 41
   Consultant Evaluation 41
   Recommendations 42

11. Management Information System and Corporate Planning 43
   Development of Information Systems 43
   Development of the Planning Function 44

Appendix A. Locomotive Maintenance Schedule and Forms
Appendix B. Guidelines for Adjusting Terms of Reference for Technical Assistance Under the RRSS
Appendix C. Comments of USAID/Mozambique

Illustrations

TABLES

Table 1. Project Staffing Levels (as of October 20, 1991) 26
Table 2. Project Responsibilities 32

FIGURES

Figure 1. Proposed Schedule of Activities 26
Figure 2. Technical Assistance Organizational Structure 27
Figure 3. Organizational Structure of Accounting and Finance: Alternative 1 (multitiered) 31
Figure 4. Organizational Structure of Accounting and Finance: Alternative 2 (horizontal) 31
Figure 5. Proposed Coordination of Technical Assistance 33

Glossary

CFM	Caminhos de Ferro de Moçambique (National Railway of Mozambique)
CFM(C)	CFM Center
CFM(DG)	CFM Corporate
CFM(N)	CFM North
CFM(S)	CFM South
CHEC	Constant Horsepower Excitation and Control
DE	Diesel electric locomotive
GE	General Electric
GM	General Motors
LBI	Louis Berger International
MIS	management information system
MOTC	Ministry of Transport and Communications
MTBF	mean time between failures
NRZ	National Railway of Zimbabwe
PC	personal computer
PSAPS	CFM Performance Strategy and Assets Partitioning Study (a study being recommended by the evaluation team)
RAPS	CFM Restructuring and Privatization Study (a study being recommended by the evaluation team)
RRSS	Regional Railroad Systems Support
RSA	Republic of South Africa
SADCC	Southern Africa Development Coordination Conference
SAEC	Southern Africa European Community Shipping Conference
SATCC	Southern Africa Transportation and Communication Commission
SRRRS	CFM Staff Retrenchment, Redeployment, and Retraining Study (a study being recommended by the evaluation team)
STIPA	SADCC Transportation Investment Priorities Assessment (a 1991 study)
TA	technical assistance
TOR	terms of reference
USAID	United States Agency for International Development

Executive Summary

FINDINGS

The midterm evaluation team reviewed the objectives of the Mozambique component of the Regional Railway Systems Support (RRSS) project, design of the project and its elements, progress as of October 1991 in attaining the objectives, and plans of the RRSS technical assistance teams to achieve project objectives within the project schedule. Detailed findings are presented in Chapters 1 through 11. The principal findings are summarized below:

1. Caminhos de Ferro de Moçambique South [CFM(S)], part of the Caminhos de Ferro de Moçambique (CFM), is performing locomotive maintenance and repair, such as the locomotive rebuilding efforts financed under the project, that are inherently uneconomic for an organization of its size. Such services are uneconomic, and therefore undesirable, for a commercial enterprise—which CFM(S) now is—to continue performing periodic heavy locomotive maintenance, such as overhauls, and major locomotive repairs. Fleets of hundreds of locomotives are required to make such locomotive maintenance and repair operations economic.

2. The CFM(S) locomotive diesel shed is fairly well operated, even at present, and could be improved to effectively carry out all CFM(S) potentially economic locomotive maintenance activities, at what would probably be a relatively modest cost (in comparison to the overall cost of the RRSS locomotive maintenance elements). Limiting CFM(S) locomotive maintenance to only activities that could be carried out by the railway economically would require that periodic heavy maintenance be carried out elsewhere, probably on a 4- to 6-year cycle for individual locomotives. Recent improvement in the political relations between the Republic of South Africa (RSA) and other countries of the southern Africa region may make it desirable to contract out heavy locomotive maintenance and major repair work to the RSA railways (Spoornet). Another option for contracting out some of this work might be the National Railways of Zimbabwe (NRZ), which operates a fleet of about 300 locomotives. Private firms also exist in both RSA and Zimbabwe that could carry out this work. For example, Dobryl, in RSA, is a licensee that performs locomotive overhauls. Unless CFM(S) enters an arrangement of this type, the railway will have difficulty recovering the full costs of locomotive maintenance and repair.

3. With some operationally and financially desirable changes in CFM(S) railway operations, specifically, permitting or requiring Spoornet and NRZ to operate their own locomotives and train consists to the port of Maputo, CFM(S) requirements for line-haul locomotives could decline in future years, even as traffic volumes increase. Requiring Spoornet and NRZ to operate their own locomotives and wagons on the CFM(S) rail lines to Maputo, with their own crews, to haul their own freight could enable CFM(S) to accommodate RSA and Zimbabwe traffic at a profit, provided only that "tolls" for operation were sufficiently high to cover all permanent way capital and maintenance costs. This operational change could also largely

eliminate CFM(S)'s liability for lost Spoomet wagon parts and the associated high rental charges for failing to return the wagons within stipulated periods of time.

4. For a number of reasons, the 10 locomotives being acquired under the amended RRSS are inappropriate for CFM(S) operations. Most important, the 1960s technology used by CFM(S) is neither as reliable as a number of other locomotive acquisition options nor as fuel-effective and overall cost-effective. Flexibility of locomotive employment is another important consideration. As indicated earlier, CFM(S) line-haul locomotive requirements may not increase; shunting locomotive requirements can be expected to increase, however, and it probably is desirable that CFM(S) gradually replace its current fleet of 6-axle locomotives with light, 4-axle, low-maintenance, cost-efficient, flexible-use locomotives, which are already available. (It may only be possible for CFM(S) to convert its fleet to what would be ideally suited to future financially and operationally optimal operations, over a period of 15 to 20 years. More than 40 locomotives are now on order for CFM railways, some of which will need to be added to the CFM(S) fleet.)

5. The Louis Berger International (LBI) and Enge-Rio locomotive maintenance technical assistance teams, which are both being financed under the RRSS, have been effective in some areas and ineffective in others. Locomotive rebuilding, especially, has not been well performed to date, and the program is somewhat behind schedule. As stated in Item 1, it may be undesirable to continue this element of the RRSS. At the very least, the poor operating results and service records of the two locomotives, for which the rebuilding effort has been "completed," necessitate sending back the locomotives to the workshop for further work, in order to attain acceptable levels of locomotive availability and reliability (at present, CFM(S) does not dare to send either of these "rebuilt" locomotives more than short distances from Maputo for fear of on-line breakdown). Besides the rebuilding effort, some improvement is required in the coordination of the two technical assistance teams, and clear and unambiguous lines of authority and responsibility need to be established. Some technical assistance project goals also require re-examination, particularly in developing the role of the locomotive diesel shed and in training staff.

6. The accounts of CFM(S) and of its parent organization, CFM, do not exist in any usable form. An attempt was recently made to examine historical financial information to produce a balance sheet as of the beginning of 1989; regardless of how accurately this might have been done using accounting information, it is difficult to see how this effort might be useful, since the fair market value of many CFM assets probably has little or no relationship to the accounting values that might be agreed upon, and there have been no substantive changes in the supporting accounting systems. Very little appears to have been accomplished by the technical RRSS assistance teams charged with responsibility for improving the accounts of CFM and CFM(S). The technical assistance team is proposing to develop a standard costing approach in CFM, but this is probably not desirable, at least in the short term, and reliance on an average costing approach would probably be better suited to CFM staff capabilities and potentials, as well as to the status of the CFM information system, which essentially does not yet exist as a system at all. In addition, some improvement is required in the coordination of the two technical assistance teams, and clear and unambiguous lines of authority and responsibility need to be established.

7. CFM(S) is too small an organization to justify development of a full financial department or even of an accounts section, and the small number of qualified and partially qualified personnel (individuals with accounting and/or economics training) in the entire CFM organization are insufficient to staff more than a single financial services office. It therefore appears desirable, from the standpoint of both staff availability and economics, that a single office be developed at the CFM level to handle all accounts and financial support functions of the enterprise, and that qualified and partly qualified persons within the organization be concentrated within the office and not dispersed (essentially wasted) among the several operating entities of CFM. The technical assistance team is considering continuing the current structure and procedures of CFM and CFM(S) accounts and financial services functions, which in the view of the evaluation team is not an appropriate strategy for addressing the problem. If poor communications should make it difficult or impossible for a centralized accounts and financial support office to function effectively, then one or another of the CFM operating entities should arrange to contract out the accounts and financial support function to appropriate firms in the Mozambican private sector. In any case, it is not desirable that attempts should be made to develop a separate accounts/financial support office in CFM(S). (The only possible exception would be if CFM were leased to a private investor or investors, in which case it would be up to the new operator(s) to identify whether or not an accounts and financial support function could be economically established within the firm.)

8. Although a CFM planning directorate was established as a separate entity in April 1991 and an appropriate person was appointed to head it, not much else appears to have been done to develop this critical function, lacking in CFM at present. CFM needs first of all to define the role of this directorate. Because the enterprise lacks both an information system and an implementation monitoring body, it is probably desirable that the planning directorate's role be rather broadly defined to include development of a database for the enterprise and the establishment of an implementation monitoring function, as well as the development of a strictly planning function.

9. The groundwork for training workshop and financial department staff has been laid through preparation or conduct of staff audits for these offices, and it appears to the evaluation team that the audit may have been carefully designed and successfully carried out by the technical assistance team. Aside from this effort, however, it does not appear that much has been accomplished in training. A proposed training program for financial services staff would appear to perpetuate some of the inadequacies of CFM's current financial system and procedures, and the team has some concern that training programs being prepared may extend to areas that are not readily usable by the trainees or by CFM as an institution, as, for example, the proposed introduction of standard costing, discussed in Item 6. The technical assistance teams have not yet investigated the possibility of using the regional railway training school at Maputo or another local training facility to contribute to the overall training effort. At the least, it may be desirable to consider the school or another local facility for teaching English to some key staff who will need to deal with English speakers and documentation in the English language. It is also desirable that training programs designed under the RRSS be made into permanent programs; otherwise, the effects of the training might be largely lost over time. Sustainable operations improvements must be the goal. The CFM human resources department indicates that it would like to assign trainees to any courses to be provided under RRSS, so that these trainees can eventually take over the courses and train future CFM staff. In the view of the evaluation team, this training of future trainers is highly desirable and

an objective of the technical assistance training effort, with the understanding that it is entirely CFM's responsibility to find suitable individuals to be trained as trainers.

10. Development of an inventory control system to monitor the receipt, stocking, and disbursement of diesel parts covered by the USAID project is under way. Plans for enhancements to the system include integration within the overall accounting system, inclusion of inventory values, and expansion to cover all CFM materiel stock.

RECOMMENDATIONS

On the basis of the principal findings of the midterm evaluation team, as presented in the preceding section of this chapter, the team makes the following recommendations:

1. If most of the identified costs of the locomotive rebuilding program can still be saved, it would be desirable to halt the program. The locomotive that is being rebuilt is inappropriate for CFM(S), and the unit cost of the effort is unacceptable. If most costs of this RRSS component are now sunk, and not recoverable, the technical assistance team responsible for carrying out this program should be required to do it properly, which probably will mean redoing to no good effect much of the work that has thus far been done.

2. CFM(S) line-haul locomotive requirements should be estimated, taking into account the desirability of curtailing CFM(S) line-haul locomotive use for accommodating most transit traffic.

3. It may still be possible to make some desirable changes to the specifications of the 10 locomotives scheduled for delivery under the RRSS. Although some penalty charge might be incurred by changing specifications at this late date, the possibility would be worthwhile to investigate, in order to obtain more reliable and cost-efficient locomotives than those currently on order. Whether this is possible, consideration should be given to sending all 10 of these new locomotives to CFM Central [CFM(C)] or CFM North [CFM(N)] rather than sending any to CFM(S). CFM(S) should not immediately need additional line-haul locomotives, but consideration should be given to preparing a locomotive fleet turnover program, wherein the current inappropriate locomotives are gradually retired in favor of light, 4-axle, cost-efficient, low-maintenance, flexible-service locomotives that would be well suited to limited line-haul employment, mostly for light domestic trains on the Limpopo Line, and to increasing shunting operations. This turnover program will need to take into account any new locomotives that CFM(S) is about to receive from sources other than the RRSS.

4. Plans might be made to phase out the CFM(S) locomotive workshop and to arrange for the contracting of necessary periodic heavy locomotive maintenance by another regional railway system, probably Spoornet, but perhaps also NRZ. The workshop improvement element of the RRSS should be canceled because improvement would serve no useful purpose in the short or medium term.

5. Funds not required for workshop improvement should be shifted at least partially to development of the diesel shed. These funds would supplement the funds already designated

for the diesel shed. The diesel shed needs minor structural and track repair, small hand tools, and office supplies to make it a fully functional locomotive maintenance facility.

6. The locomotive technical assistance team should be restructured so that all locomotive-related responsibility and authority is given to Enge-Rio. Restructuring will enable the team to focus on improving the locomotive availability rate and timely addressing the quality of locomotives.

7. The workshop training plan developed by LBI should be redesigned to focus on the needs of the diesel shed and developed and delivered by a railroad training school. It is also desirable that a portion of the RRSS funds that would be available for redirected use (if the team's recommendations on the workshop and activities there are accepted) be redirected for development of a simple, low-cost training facility to accompany the diesel shed.

8. Inventory costs seem excessive. CFM(S) should adopt a policy to limit inventory to only that required over the short term. In line with this, the scheduled order of $1.7 million of locomotive spare parts seems excessive. A figure of $200,000 annually is a liberal estimate of what should be required.

9. One accounts and financial services office should be developed within CFM, supported by a fully integrated and automated system. The office should reside at the CFM, not the CFM(S), level. Plans for such a scheme should be developed and agreed upon before any training effort begins.

10. It is essential to separate the two competing goals of immediate preparation of financial documents and resolution of the longer-term problem of the organizational system's ability to operate effectively. To this end, implementation of a prepackaged and simplified automated general ledger and reporting system to enhance the accuracy and timeliness of the accounts should be installed as soon as possible. The main team effort should then be directed to the creation of a sustainable accounting organization and supporting system.

11. To ensure a closely coordinated team effort, the Enge-Rio team should report directly to the LBI team leader. However, specific assignments and reporting relationships should be flexible in order to meet the demands of various projects.

12. To limit further delays in implementation and ensure development of a functioning and sustainable accounting system, intermediate product output targets should be established for the technical assistance teams. Examples of intermediate output targets include the implementation of an "off-the-shelf" accounting system (which would serve the short-term goal of producing financial reports but not address the larger issues of data quality and organizational reform) within a 2-month period or the redesign of the accounting organization within a 4-month period. (See further discussion in the recommendation section of Chapter 7.)

13. It is not desirable to include the internal audit function under the CFM financial department because the department itself will require auditing; preferably, internal audit should report directly to top management.

14. Efforts should be made to develop the planning directorate, and consideration should be given to merging this directorate with the CFM informatics department, also not yet developed. This

would have the advantages of (1) minimizing the costs of developing the two functions; (2) better ensuring that planning would have the information essential to any effective planning activities; (3) conserving scarce qualified staff; and (4) better ensuring that management receives management information system (MIS) reports that include well-balanced analyses of data rather than raw data only, as could occur with separate development of the two functions.

15. It is desirable that a decision on full computerization of CFM data processing be deferred until decisions have been made on the optimal organizational structure of CFM, the functions to be retained within the enterprise and those to be contracted out, and the data collection and uses associated with the functions to be retained; and the designers of the computerized information system have analyzed the local capacity for effectively maintaining any equipment to be acquired.

16. It is desirable that future RRSS evaluations be rescheduled, and it would be especially useful for the financial and locomotive maintenance members of the team to return in 1992.

1. Introduction

MOZAMBIQUE COMPONENT OF REGIONAL RAILWAY SYSTEMS SUPPORT PROJECT

The Mozambique component of the USAID-financed Regional Railways Systems Support (RRSS) project was designed to (1) increase the tractive power available to CFM, specifically CFM(S) and CFM(C), and (2) develop a commercially oriented financial management system for the railways. In 1990, the project was amended to further increase the availability of tractive power to CFM railways and to initiate development of a management information system (MIS), as well as to provide guidance to CFM management. Specifically, the anticipated outputs of the project, as amended, were as follows:

- Rehabilitation and full operation of eight diesel electric locomotives;
- Proper maintenance and full operation of 54 diesel electric locomotives [in the CFM(S) and CFM(C) fleets] and 17 steam locomotives [in the CFM(C) fleet];
- Fully equipped and structurally sound locomotive workshops in Beira and Maputo,
- Delivery and operation of 10 new locomotives;
- Improved ordering, stocking, and inventory control system at the CFM(S) workshop in Maputo;
- Improved financial control and accounting system that provides useful information to CFM managers;
- Development of an MIS, specifically, development of detailed indicators of the maintenance and performance of the CFM diesel locomotive fleets;
- Conduct of two studies designed to lay the groundwork for a more comprehensive approach to creating an economically and operationally efficient CFM; and
- Training of 192 locomotive maintenance technicians, 24 procurement and inventory control staff, 12 financial managers and 12 accountants, and placement of these individuals in key staff positions at CFM and CFM(S).

In order to arrive at these outputs, excluding conduct of the two studies, would require an estimated 432 person-months (p/m) of technical assistance. This total included 3-year assignments for 12 experts, namely, a chief of party (COP)/railway management specialist; a deputy COP/financial management specialist; a financial management and accounting trainer; a finance/cost accounting specialist; a computer specialist; an inventory control/storeroom management specialist; and six locomotive workshop experts, three with mechanical expertise and three with electrical expertise. In addition to these long-term specialists, the RRSS included 18 p/m for short-term specialists in selected engineering fields, finance, accounting, inventory control, and storeroom management, and 18 p/m for training experts to conduct short courses in accounting, financial management, inventory control and storeroom management, and locomotive repair.

EVALUATION OF MOZAMBIQUE COMPONENT

In order to further ensure that the expected outputs of the Mozambique component of the RRSS would be produced according to the project schedule, an evaluation team was formed. The purpose of the team, which was formed independently of any technical assistance contract under the project and simultaneously with project authorization, was to review progress of all elements of the Mozambique component 3 to 5 times during the project. The following evaluations were scheduled:

- **Midterm evaluation (October 1991).** The midterm evaluation is the subject of this report. The evaluation team comprised a locomotive workshop engineer/training specialist, a railway financial management specialist, and a transport economist/team leader.
- **Second Evaluation (September 1993).** The second evaluation is scheduled to coincide with the completion of technical assistance to the Mozambique component. The evaluation team is scheduled to consist of a railway management/operations specialist, the locomotive workshop engineer/training specialist, the railway financial management specialist, and perhaps the transport economist.
- **End-of-Project Evaluation (October 1994).** The team for the end-of-project evaluation will be the same as that for the second evaluation.
- **Monitoring visits (unscheduled).** Monitoring visits are optional, and the makeup of the monitoring teams, if any, is undetermined.

2. Economics of CFM(S) Railway Operations

CFM(S) RAILWAY SYSTEM

The CFM(S) railway system consists of three rail lines—the 534-km Limpopo line, the 88-km Ressano Garcia line, and the 74-km Goba line. Currently the operations of all three lines are limited largely to 8-hr periods of daylight, on days when operations do not need to be halted entirely due to civil disturbances. In recent years, eight locomotives have been disabled because of attacks along the Ressano Garcia line, and some cannot be repaired economically. Much of the freight being accommodated on these lines, especially on the Ressano Garcia and Goba lines, represents the overseas trade of Zimbabwe, RSA, and Swaziland. With the current high cost of CFM(S) railway operation, including locomotive losses, Mozambique is subsidizing the international trade of these neighboring countries.

To end these subsidies, it may be desirable to adjust CFM(S)'s operations. CFM(S) might largely or wholly discontinue using its own equipment and crews to accommodate the trade freight of Zimbabwe and RSA. Such a change in operations would reduce the size of CFM(S) operations, thereby making the company more manageable than it now is. In the medium to long term, it may be desirable to reintroduce large-scale operation of CFM(S) locomotives in order to maximize potential profits. If CFM(S) is to earn an increment of net profit by providing its own locomotives, they will need to be used quite frequently. [The RRSS goal of 75 percent availability, albeit technically laudable, may not be sufficient for CFM(S) to realize any increment to net earnings as a result of operating its own locomotives to accommodate transit freight traffic.] In the light of efficiency of regional railway operations, any future large-scale reintroduction of CFM(S) locomotives to accommodate transit traffic should be accompanied by arrangements for regional railways locomotive pooling. Such arrangements would preclude the need to transfer train consists at intermediate points between the locomotives and crews of the different national railways.

Currently, CFM(S) railways must be concerned with financial *survival*, not *profit maximization*. Survival can best be achieved by reducing the size and complexity of the company's operations as quickly and substantially as possible, within the context of continuing to meet all economic demand for services.

An operational change to greater reliance on the locomotives and crews of Spoornet and NRZ to accommodate transit traffic would have the following implications.

- The CFM(S) line-haul locomotive fleet would accommodate mostly relatively light domestic trains on the Limpopo line, and shunting operations would make up a larger portion of the CFM(S) locomotive work effort. Overall fleet requirements would be reduced, and the desirable locomotive type would be a light, 4-axle locomotive, equally appropriate for moving light trains in line-haul operations and for shunting operations.
- The evaluation team recommends phasing out CFM(S) locomotive workshop operations, regardless of whether operations are changed to greater reliance on Spoornet and NRZ locomotives. However, implementation of the operational change would reinforce the workshop recommendation.

- There are eight CFM(S) stores locations, which is about seven too many from the standpoint of railway profitability. The operational change to greater reliance on Spoornet and NRZ locomotives would further reduce any current advantages in having multiple locations of stores.
- CFM(S) "management" of transit traffic would be reduced to identifying a suitable mechanism for charging for Spoornet and NRZ operation on the CFM(S) railway system; adjusting "tolls," as required, to cover all permanent way capital and maintenance costs and provide some profit to CFM(S), at some agreed levels of annual traffic; and monitoring Spoornet and NRZ operations on the system to ensure that payments for use of the system are correct.

The economics of operations on the individual CFM(S) lines, now and in the near to medium term, are discussed in the following sections.

RESSANO GARCIA LINE

The 88-km Ressano Garcia line is the only double-tracked line in the CFM railway system. Provided only that it will again be possible to operate the line on a 24-hour basis throughout the year, the line is potentially highly profitable, not only for the railway, but also for the port of Maputo. Even with the current circumstances of interrupted operations, the line carries not only sizable quantities of trade from RSA, but also accommodates much of the trade of Zimbabwe.

Because the line is only 88 km long, it is not very useful for accommodating domestic freight movements. Ideally, transit traffic should cover the total costs of maintaining the line.

In recent years, among the train consists operated by CFM(S) on the Ressano Garcia line have been numbers of Spoornet wagons, from which parts have been stolen; consequently, these vandalized wagons have been parked for extended periods. The costs to CFM(S) of these stolen parts include their replacement and payment of rents for keeping Spoornet wagons too long. By permitting Spoornet to operate its own trains with its own crews to the port of Maputo, responsibility for Spoornet equipment and freight security is transferred to the Spoornet crews while the trains are in transit, and CFM(S) financial losses in connection with this traffic should end.

GOBA LINE

The 74-km Goba line accommodates little else than some portions of the overseas trade of Swaziland. In recent years this traffic has principally consisted of exports of sugar, molasses, and citrus fruits. Swaziland has gradually been reducing its use of the rail line and the port of Maputo, however, primarily because of the cargo losses sustained by Swaziland shippers both on the railway and in the port. Each year for about the past 4 years, Swaziland shippers have reduced the percentage of their sugar and citrus fruit exports that go through Maputo to almost zero.

The SADCC Transportation Investment Priority Assessment (STIPA), conducted in 1991, concluded that even with improvement of Maputo port operations, including improvement of cargo security, and with more frequent calling of ocean shipping services at the port (thereby lowering cargo dwell times), it would still be preferable for Swaziland to move much of its trade through RSA ports. STIPA identified, further, that to the extent Swaziland might usefully continue to rely on an improved port of Maputo for the accommodation of its international trade, it would generally be less costly to move this trade by road between Swaziland and the port. Accordingly, STIPA forecast that freight volumes on the Goba line would be likely to decline to about 200,000 tons by the year 2000.

This forecast, however, presumes that the line will still be in operation by the end of the 1990s. If economic and financial considerations prevail, this will probably not be the case. The Goba line is already in poor condition; it will require rehabilitation to continue operating beyond the next few years. Moreover, there is already a possibility that it is not financially remunerative to CFM(S) to continue operating this line, especially if Swaziland is no longer sending sugar and citrus fruit exports on the line, and if the condition of the line has now become so deteriorated that derailments constitute a real hazard. It is unlikely that rehabilitation of the line will prove to be economically justified, even if traffic volumes turn out to be 2 or 3 times those projected by STIPA.

On the other hand, a good road between Maputo and the Swaziland border could probably be justified by the benefits to local traffic along the corridor of the road, as well as by benefits to through traffic. The road should permit the port of Maputo to recover some of the Swaziland overseas trade it has been losing in recent years. At the same time, Swaziland shippers and importers cannot be expected to avoid using RSA ports in the future. STIPA, in fact, understated the advantages of RSA ports by not taking into account the lower ocean shipping costs offered at those ports compared with those of Mozambique. This underestimation is especially significant at present because the Southern Africa-European Community (SAEC) shipping conference has imposed a surcharge of US$300 per container on traffic accommodated at Maputo as a result of inadequate handling services at the port.

LIMPOPO LINE

Unlike the short Ressano Garcia and Goba lines, the Limpopo line, extending northward from Maputo for 534 km to the Mozambique-Zimbabwe border, has potential for accommodating significant volumes of domestic traffic, as well as transit traffic. Thus, CFM(S) will need to continue operating its own trains on this line, although not necessarily all the way to the border and not necessarily the same services that have been provided at less troubled times in the past. In line with the goal of achieving financial profitability, services on the line might be re-examined to identify optimal service design. This will probably involve reducing the number of stations along the line and streamlining services to call at fewer stations while providing better services to stations that will continue to be served.

3. CFM(S) Locomotive Maintenance Program

CFM(S) LOCOMOTIVE FLEET AND ITS USE

The CFM(S) locomotive fleet is composed of 36 GE U20-C locomotives with an average age of approximately 10 years. The design of this locomotive dates from the 1960s. These locomotives have 6 axles, are rated at 2000 horsepower, and are designed for main line operation. However, because of the unavailability of switching (shunting) locomotives, the GE U20-C locomotives are also used in switching service. The CFM(S) locomotive fleet had an availability rate of about 55 percent in 1990 and suffered from a decline in the number of locomotives as a result of sabotage and accidents. In order to strengthen and expand the capacity of the railroad, two objectives—increasing the availability rate to 75 percent and rehabilitating eight locomotives—were identified.

LOCOMOTIVE MAINTENANCE PROGRAM

The objective of the locomotive maintenance program is to strengthen and enhance the efficiency and capability of CFM(S). Four outputs of the project were identified:

1. Increase of locomotive availability to 75 percent
2. Rehabilitation of eight CFM locomotives
3. Development and implementation of locomotive maintenance procedures (Chapter 5)
4. Training of CFM personnel to provide adequate locomotive maintenance (Chapter 6)

Increase of Locomotive Availability to 75 Percent

Since the beginning of the project in early 1990, CFM(S) locomotives have not yet approached the desired availability rate,[1] which has remained at approximately 54 to 57 percent. Because virtually no progress has been made in achieving the desired output, a reassessment of the technical assistance is in order.

The reporting structure of the two technical assistance teams (LBI and Enge-Rio) has led to duplication of effort in some areas and lack of a comprehensive plan for improving the performance of the CFM(S) locomotive fleet. To improve the effectiveness of the locomotive technical assistance team, moving the responsibility for locomotive maintenance and performance to Enge-Rio should be considered. In addition, the three LBI positions now involved with locomotive maintenance and rehabilitation should be moved under the control of Enge-Rio. This would put the responsibility for locomotive maintenance and performance directly with Enge-Rio, which has the expertise and capability to meet the stated objectives.

When the evaluation team visited the Maputo workshop, 22 locomotives were out of service for maintenance or repair, and 14 were available for service. CFM(S) indicated that it requires an average

---

[1]The availability rate is calculated by determining the number of hours the locomotive was available for service divided by the total number of hours in a given month.

of approximately 19 locomotives to satisfy its transportation needs, of which 3 typically operate in switching service and 16 are available for main line service for a period of 8 to 10 hours, averaging 92 km/day with 28- to 30-car trains. The CFM(S) availability rate is, however, somewhat misleading in the performance of the locomotive fleet because it includes locomotives that have been severely wrecked or damaged and are therefore undergoing extensive, long-term rehabilitation. Because the CFM(S) fleet is so small (36 locomotives), the availability rate for the remaining locomotives is distorted. Railroads typically exclude from availability rates locomotives out of service for extensive rehabilitation. Using this method, the resulting availability rate more accurately reflects the performance of the operating fleet of locomotives and is not distorted by a few wrecked or damaged locomotives. Using CFM(S) data for April 1991, and removing four locomotives undergoing extensive rehabilitation from the calculation, the availability rate for April 1991 was 64 percent. This is a more accurate indicator of the relative health of the CFM(S) locomotive fleet. At this time, locomotive availability, or lack thereof, does not limit train operations—on an average day, CFM(S) uses only about half the available locomotive fleet, half the time. (Given that these locomotives are required for only an 8- to 10-hour day, the availability rate is actually higher than indicated.) By their own calculations, the Enge-Rio technical assistance team has noted a slight but steady improvement in the availability rate since January 1990.[2]

A more telling measurement of locomotive performance, and one that has more immediate impact on a locomotive maintenance facility, is the number of days between locomotive failures.[3] The MTBF represents the number of days a given locomotive, or fleet of locomotives, has operated before failing. Examination of a small sample of CFM(S) locomotives produced an MTBF of 5 to 10 days. This indicates that, with this particular sample of locomotives, each locomotive would fail approximately every 5 to 10 days.[4] A measurement system such as MTBF provides more immediate feedback to the locomotive maintenance facility than does the availability rate. Other measurement systems such as locomotive-out-of-service ratio and detention time can also be used as reference points for locomotive health.

Rehabilitate Eight GE U20-C Locomotives

The primary issue in the rehabilitation of CFM(S) locomotives is performance of the final product. As of June 28, 1991, two locomotives (D-107 and D-113) had completed extensive rehabilitation. Since being released for service, within 60 days D-107 has experienced 12 failures and D-113 has experienced 7 failures. The failure rate should be zero for these locomotives in that time period. The quality of rehabilitation needs improvement if these locomotives are to reach previously stated availability objectives. If the final product cannot be made to perform to acceptable standards—zero failures in the first 90 days and an availability rate of 75 percent thereafter—rehabilitation of CFM(S) locomotives at the Maputo workshop should be terminated. An alternative is to contract with another railroad or a locomotive rebuilder for the balance of the locomotives scheduled.

Eight GE U20-C locomotives were identified for extensive rehabilitation during the 3-year life of the project. To date, two locomotives have been completed and are in service, and two others are in the workshop being rehabilitated. Two more locomotives were originally scheduled for completion in

---

[2]This is a different calculation from the previously discussed availability rate.

[3]Often termed "mean time between failures" (MTBF).

[4]As a basis for comparison, Burlington Northern locomotives have an MTBF of about 70 days.

1991, and the final two were to be rehabilitated in 1992. The revised schedule calls for four locomotives to have been rehabilitated; the additional two scheduled for 1991 will not be finished because they have not yet entered the workshop. This means that four locomotives must be rehabilitated in 1992. According to the work plan, six locomotives should have been rehabilitated by the end of 1991, but the actual output will be four locomotives by the end of 1991.

RECOMMENDATION

The evaluation team recommends the following:

- Restructure the locomotive technical assistance team, giving all locomotive related responsibility and authority to Enge-Rio. This will enable the team to focus on improving the locomotive availability rate and timely addressing the quality of locomotive rehabilitations.

4. CFM(S) Maputo Workshop and Diesel Shed

Following is a description of the Maputo workshop, the diesel shed, and the roles of the facilities in the maintenance and repair of CFM(S) locomotives.

MAPUTO WORKSHOP

The workshop is a large facility originally designed for the maintenance and repair of steam-powered locomotives. The workshop building is in disrepair, with large holes in the roof and inadequate lighting. The work areas are disorganized and dirty.

Today the workshop is dedicated primarily to the rehabilitation of severely damaged locomotives and periodic maintenance activities. The Workshop employs 264 people on one shift, 5 days a week. Typically three or four locomotives in various stages of assembly and disassembly, as well as up to 10 locomotives receive routine maintenance at any given time in the workshop. Locomotive rehabilitation support functions for the qualification and repair of diesel engines, locomotive trucks (bogies), car body components, and other locomotive mechanical equipment are also located in the workshop. Among the workshop's other functions are repair and rehabilitation of rotating electrical equipment (traction motors, generators, and small electric motors) and electrical components. The workshop can disassemble a locomotive to the frame, qualify and overhaul the locomotive subcomponents, and reassemble the locomotive. The result is virtually a "new" locomotive.

The workshop has outlived its usefulness as a locomotive rehabilitation facility. The complete rehabilitation of locomotives, which is the workshop's primary function, is no longer justifiable. Given the smallness of the CFM(S) locomotive fleet (36), maintaining and staffing a fixed asset such as the workshop is not economically viable. It is a monument to a bygone era in which railroads were industry giants and no job was too large. Today, U.S. railroads can no longer justify such facilities and operations, even with locomotive fleets 50 times larger than that of CFM(S). The workshop should be abandoned and CFM(S) should halt rehabilitation of locomotives.

As alternatives to rehabilitating locomotives, CFM(S) should contract for locomotive rebuild or purchase new or newly rebuilt locomotives. In either case, the cost of maintaining the fixed asset of the workshop and the current staffing levels is no longer desirable.

DIESEL SHED

Appropriate locomotive maintenance activities currently carried out in the workshop should be moved to the diesel shed.

The diesel shed is staffed by 84 individuals and operates 24 hours a day, 7 days a week. It can accommodate five locomotives on each of its four tracks. At one end of the building, raised pedestal pits are used to spot for service, maintenance, and repair, and a traveling A-frame overhead crane is used for lifting heavy components. At the other end is a nonpedestal pit where one locomotive can be spotted for work requiring access to the underside of the locomotive. The diesel shed also contains a small laboratory, or "oil lab," that analyzes samples of locomotive crankcase oil and cooling system water to detect contamination or dilution that may lead to a locomotive failure.

The diesel shed has small holes in the roof and is dimly lit and dirty, and the track needs maintenance and repair, both inside and out. The repairs needed, however, are minor compared to those required in the workshop. In addition to minor structural and track repair, the diesel shed lacks the small hand tools and office supplies and equipment to make it a functioning locomotive maintenance facility.

The diesel shed performs locomotive maintenance on weekly, quarterly, and semiannual cycles. Plans are now being prepared to perform annual and biennial maintenance there as well. The current CFM(S) locomotive maintenance cycle calls for locomotive maintenance at intervals of 1 week, 3 months, 6 months, 9 months, and 1 year. The cycle is then repeated, with additional items added at 2-, 4-, 8-, and 16-year intervals.[5]

MAINTENANCE PROCEDURES

The objective of locomotive maintenance is to provide a locomotive capable of meeting the needs of the transportation and operating function of the railroad at the lowest possible cost. A locomotive maintenance program based on time, as is the case with CFM(S), is common because of the ease of scheduling locomotives into the shop for maintenance. In addition to time, more sophisticated locomotive maintenance programs consider mileage, type of service, and component life cycle.

A maintenance program should not only provide a comprehensive package to address locomotive performance and reliability, not the rebuilding of locomotives, but also address economic considerations. Because a railroad does not derive income from maintaining locomotives, a locomotive maintenance program must provide only the maintenance and repair essential for the operation of the railroad.

If, as recommended, the workshop is closed, the design of the proposed maintenance program for CFM(S), GE U20-C locomotives should be evaluated for three reasons.

First, the number of maintenance items proposed is excessive given the level of service of the locomotives. For example, CFM(S) locomotives are scheduled to receive maintenance weekly. At this level of service, the locomotive maintainer (electrician, machinist, or other worker) is required to perform 65 separate maintenance functions, covering six pages of documentation. During 1 month, 260 maintenance functions will have to be performed. The large number of maintenance items and the frequency with which they are performed will inflate the operating cost of the locomotive, increase locomotive downtime, and ultimately reduce availability. At a 1-year interval, the maintenance activity becomes even more intensive—CFM(S) calls for 236 maintenance items.[6] The redesign of the maintenance plan should make an effort to reduce the number of maintenance items and the frequency with which they are performed. By designing a locomotive maintenance program specifically for GE U20-C locomotives, with consideration to the type of service in which the locomotives operate, CFM(S) not only can improve locomotive availability rates, but also can reduce operating costs.

Second, the maintenance program must be altered to reflect the movement of maintenance activities from the workshop to the diesel shed. Studies are needed to establish the correct interval, and until then CFM(S) should not attempt maintenance activities at greater than 4- to 6-year intervals. The

---

[5]See Appendix A for a description of Burlington Northern Railroad's maintenance activities and documentation.

[6]As a basis for comparison, Burlington Northern Railroad calls for 158 maintenance items at a 1-year interval. CFM(S) locomotives operate with an availability rate of about 56 percent, whereas Burlington Northern locomotives achieve availability rates of 95 to 97 percent.

required maintenance at this interval typically calls for the replacement, or overhaul, of major locomotive components (diesel engine, trucks, rotating equipment). This work should be contracted out to another railroad or locomotive rebuilder because rehabilitation of locomotives by CFM(S) is not a justifiable activity given the size of the locomotive fleet (36) and the type of locomotive rebuilt (GE U20-C).

Finally, an effective maintenance program should be based on performing only maintenance items that will prevent the locomotive from failing. Such a program must first document locomotive failures, then analyze the causes of the failures, and finally put in place a maintenance activity that prevents the failure from recurring.

The design of the maintenance program currently calls for maintenance at 1 week, 3-month, 6-month, 1-year (R1), 2-year (R2), 4-year (R4), 8-year (R8), and 16-year (RG) intervals. This design is actually a modification of an existing CFM(S) maintenance plan.

The Enge-Rio team has begun sporadic failure identification and analysis in the workshop and the diesel shed. Preliminary indications are that CFM(S) locomotives average about 1 failure per 1000 km (0.3 to 0.4 is considered acceptable), with a slight decline in frequency since January 1991. The 10 most frequent failures involve the locomotive brakes, the cooling system, low oil pressure, ground relay faults, transition, failure to loading, inoperative dynamic brakes, defective gear cases, and low oil in the governor.

By analyzing existing data, CFM(S) can, with Enge-Rio technical assistance, develop and implement a cost effective maintenance program.

PROGRESS AGAINST THE SCHEDULE

The technical assistance teams of Enge-Rio and LBI have developed a maintenance plan with 1-week, 3-month, 6-month, 1-year (R1), 2-year (RP), 4-year (R4), 8-year (R8) and 16-year (RG) maintenance intervals. The 4- and 8-year intervals are proposed for the workshop and the rest of the maintenance activities for the diesel shed.

The locomotive maintenance objective for 1991 is six R1, four RP, three R4, three RB, and two RG maintenance activities. As of September 1991, the work remaining consisted of two R1, one RP, and one RB maintenance activity. (Two additional R4 activities not on the schedule were accomplished.) This work should be finished in accordance with the schedule. A reduction in the time required to complete each maintenance activity is also detailed in the maintenance plan. In the past, the time required to complete an R1 was 15 days, RP 25 days, R4 30 days, and RG 60 days. The objective of the maintenance plan is to reduce the time required to: R1 = 5 days, RP = 14 days, R4 = 21 days, and RG = 38 days. Given the progress made toward this objective and the continued technical assistance of the Enge-Rio team, the objective should be met by the end of the contract.

RECOMMENDATIONS

Based on the foregoing, the team recommends the following:

- Close the workshop, halt rehabilitation of CFM(S) locomotives, and move appropriate locomotive maintenance activities to the diesel shed.
- Redesign the proposed locomotive maintenance program based on the closing of the workshop and with consideration to appropriate maintenance activities based on locomotive failure analysis and the cost of maintenance activities.

5. Locomotive Maintenance Manpower Development and Incentive

A prime objective of the project is to leave in place a successful locomotive maintenance program that CFM(S) employees can continue to operate.

OBJECTIVES OF THE LOCOMOTIVE MANPOWER DEVELOPMENT AND INCENTIVE PROGRAM

The original training objectives outlined in the project paper are presented in Chapter 1. After the LBI training needs survey was conducted, these objectives were modified as follows:

1. Train 144 locomotive technicians
2. Conduct 75 person-months of training
3. Procure training aids
4. Train technical assistance counterparts
5. Develop specific training plans and objectives
6. Train the Mozambican staff to be self-sufficient in locomotive maintenance

Because of the proposal to close the workshop, these objectives will again need to be redrafted.

Objectives One Through Four

The project has established specific training objectives to train 144 locomotive technicians, conduct 75 person-months of training, procure training aids, and train the Mozambican counterparts to the technical assistants. To date, there has been little effort toward achieving these objectives. The Enge-Rio team has conducted some on-the-job training, and there has been some hands-on learning, but in reality, an organized training effort is nonexistent.

Training has evidently not been viewed as a priority until recently, and consequently there has been little or no training activity.

Develop Specific Training Plans and Objectives

LBI completed a training needs survey consisting of a task analysis and personnel profile of all employees in the workshop. From the information gathered, a training plan was prepared and about 100 employees were identified as "trainable." LBI plans to employ 2 long-term and 8 short-term trainers to develop and deliver the training detailed in the plan. The evaluation team objects to three points in the LBI training plan.

First, the training plan would no longer be valid if the recommendations of this report are accepted. The existing training plan calls for focusing most of the training effort on the workshop. If the recommendations to close the workshop and halt locomotive rehabilitation activities are adopted, the training plan will need to be altered to address the training needs of the diesel shed because locomotive maintenance activities will be moved to this location. The redrafted training plan would specifically need to address training employees who perform "running maintenance" in the diesel shed.

Second, the evaluation team recommends that the training be developed and delivered by a railroad training school rather than educational professionals from the academic world as proposed in the plan. Experience has demonstrated that railroad training schools provide more tightly focused, effective training in the practical, day-to-day maintenance and repair of locomotives than any other educational institution.

Finally, the amount of initial training planned is excessive, requiring CFM(S) to commit to too many person-hours away from the job and leaving too little training for the balance of the project. A better approach would be to spread the training time evenly over the life of the project.

There also appears to be little emphasis placed on training Mozambicans to develop and deliver training after the project ends. Training should be viewed as a long-term process and not a short-term "fix" for a particular problem. LBI should address the Mozambican "train-the-trainer" issue as part of the training plan, by working in concert with the CFM Human Resource Department.

Train the Mozambican Staff To Be Self-Sufficient in Locomotive Maintenance

Training Mozambicans to be self-sufficient in locomotive maintenance assumes that Mozambicans are interested in becoming self-sufficient and want to learn how to maintain locomotives.

The evaluation team has become aware that CFM(S) personnel, at all levels, are reluctant to become involved in efforts to solve their own problems. This attitude appears to be caused by factors as diverse as ongoing "insecurity" and low pay scales at CFM(S), resulting in a lack of interest and an unwillingness to make decisions or accept responsibility. At the management level this means that reports are not generated, information is not reviewed, and decisions are not made. At the ground floor, work is not done, not done well, or not completed in a timely manner.

The solution far exceeds the scope of the project. However, the project can make a positive impact by establishing an effective, long-term training effort and by exploring the use of incentive programs for the CFM(S) work force.

RECOMMENDATIONS

The evaluation team recommends the following:

- Redesign the LBI training program to focus the training effort on the skills required to perform locomotive maintenance in the diesel shed.
- Use a railroad training school to develop and deliver training over the long term.
- Train Mozambicans to train themselves.
- Use the training effort to positively influence the Mozambican staff.
- Develop and institute an employee incentive program.

6. Acquisition and Allocation of New Locomotives

CFM-S is scheduled to receive 10 new GE U20-C locomotives in 1992. This chapter discusses the allocation of these locomotives to CFM-S, CFM-C, or CFM-N, or distributing the locomotives among the three locations.

LOCOMOTIVE MAINTENANCE FACILITIES

Beira has two facilities for the maintenance and repair of locomotives, a workshop and a diesel shed. These facilities were originally constructed to accommodate the needs of steam-powered locomotives working in main line and switching (shunting) service in the Beira corridor.

Currently 10 GE U20-C locomotives (of which 5 are new), 4 diesel hydraulic switchers (shunters), and 16 steam-powered locomotives are assigned to CFM-C at Beira. Of this assignment, an average of eight GE U20-C locomotives are used in main line service to operate the two trains daily between Beira and the Zimbabwe-Mozambique border. One diesel hydraulic and three steam-powered locomotives are used daily in switching (shunting) service. The GE U20-C locomotives have an availability rate of about 60 percent, versus 40 percent for the steam-powered locomotives and an even lower rate for the diesel hydraulic locomotives. The GE U20-C locomotives average about four times the number of kilometers as the steam-powered locomotives.

Beira Workshop

The Beira workshop was originally designed and constructed to meet the maintenance and repair needs of about 100 steam-powered locomotives. The workshop now maintains about 16 steam-powered locomotives and, in a section being renovated with USAID funds, maintains and repairs the GE U20-C and hydraulic locomotives assigned to Beira. The section of the workshop not being renovated is dedicated to the repair and maintenance of the steam-powered locomotive fleet. The renovated portion of the workshop can hold four locomotives—two over pedestal pits—and has the facilities to completely dismantle and rebuild a locomotive. After renovation is completed, the workshop will be able to qualify injectors, pumps, nozzles, governors, and other locomotive components. A large machine shop supports the needs of both the steam and diesel locomotives.

Beira Diesel Shed

The Beira diesel shed has three tracks for locomotives and is closed at one end. Each track can hold one locomotive, with the center track having a pedestal pit and raised ramps. One side of the diesel shed opens into the rail car repair area, which in turn opens to the outside. The diesel shed has small holes in the roof and broken windows and is dark and dirty. About 46 employees perform up to 1-year locomotive maintenance activities in the diesel shed. The diesel shed operates 18 hours a day, 7 days a week, and is responsible for the light maintenance and repair of 10 GE U20-C locomotives and 4 diesel hydraulic switching locomotives.

LOCOMOTIVE ALLOCATION

Additional locomotives to the CFM fleet (five have already been received) would best be allocated to the Beira corridor. This corridor is predicted to have increased traffic over present levels and will require additional locomotives to meet this demand. The newly arriving locomotives should not be allocated to Maputo because the fleet of 36 CFM-S locomotives is currently underutilized. In Beira, the locomotives can be used in main line revenue service. Older GE U20-C locomotives now in main line service at Beira could then be moved into switching operations, and the diesel hydraulic and steam-powered locomotives retired from service. This solution would be the most cost-effective given the performance levels of the locomotive fleet assigned to Beira (GE U20-C locomotives compared with diesel hydraulic and steam power). Moreover, maintenance and repair costs are higher for the diesel hydraulic and steam-powered locomotives than for the GE U20-C locomotives. As new locomotives are assigned to Beira, failures should be infrequent and maintenance activities minimal.

Over the next 3 years, 40 new locomotives are expected to be delivered to Mozambique: 20 new GE U20-C locomotives for main line service, 10 Alsthom locomotives suitable for main line or switching service, and 10 GE locomotives designed for switching service. With these additions, motive power should be available for allocation where traffic patterns dictate.

RECOMMENDATIONS

The evaluation team recommends the following:

- Close the Beira Workshop; the number of locomotives assigned to Beira does not justify the size of the facility.
- Retire the diesel hydraulic and steam-powered locomotives; maintenance and operating costs are too high. Replace the locomotives with new locomotives coming on line, or with locomotives from CFM-S.
- Improve the condition of the Beira diesel shed and move all locomotive maintenance and repair activities there. Allocate new locomotives to Beira. Should the traffic not return to the line as anticipated, the locomotives could be reassigned to CFM(N) or to a corridor where traffic dictates.

7. General Accounting at CFM(DG) and CFM(S)

BACKGROUND

Inadequate supervision, poorly motivated and/or trained labor force, outdated organizational structure and procedures, and nonexistent supporting systems within the accounting functions of CFM have contributed to the railway's inability to produce reliable and timely information. The railroad, for lack of better information, relies on simple cash flow statements to conduct minimal financial activities in support of operations.

For the second time since donor technical assistance was established, an outside firm (Coopers & Lybrand [C&L]) was contracted to produce an opening balance of accounts. This effort is unlikely to accomplish anything useful for CFM, however, because of the limited and unreliable data on which to base the effort, and the total lack of current market valuation of fixed assets. Also, even if the effort would otherwise be potentially useful, the lack of organizational reform efforts to correct past shortcomings of the accounting and financial functions of CFM would render any outputs of the effort useless within a short period of time.

PROJECT REQUIREMENTS

Given the continued subperformance of the accounting and finance functions, the Mozambique component of the RRSS project included funds for their substantial reform. The objectives for improving the general accounting system include

1. Review and recommendation by LBI, at a managerial level, of alterations to the existing CFM accounting and financial reporting systems, specifically
   - Establishing a functioning double-entry bookkeeping system;
   - Reviewing CFM's capital policy and fixed asset reporting;
   - Evaluating and enhancing CFM's chart of accounts; and
   - Improving information flows of CFM's accounting functions, including evaluations of organizational changes and the impact of computerization.
2. Monitoring by Enge-Rio of improvements in the accuracy and timeliness of CFM(S)'s reporting by operating in a technical/line support function.

PROJECT STATUS

As shown in Table 1, the technical assistance team has been delayed in fulfilling its manpower commitments. The full team is not yet in country and most of the members have been in place for only a short time. Consequently, none of the project's general accounting goals has been met.

Currently, the Enge-Rio team is working with the CFM(S) accounting system in order to enhance the output. The LBI member, in conjunction with the LBI cost accountant, is reviewing CFM's chart of accounts.

Table 1. Project Staffing Levels (as of October 20, 1991)

	Louis Berger International		Enge-Rio	
Position	Number	Time in country (person-months)	Number	Time in country (person-months)
Team Leader	1	15	1	4
General Accountant	1	1	1	*
Cost Accountant	1	4	NA	NA
Finance Analyst	1	2	1	1
Auditor	NA	NA	1	4
System Analyst	1	4	NA	NA
Total	5	26	5	9

*The Enge-Rio general accountant has not yet arrived; the position will require 1 person-month.

Considering the number of person-months already spent on the project and the need to modify the existing organizational structure the consulting team by now should have prepared detailed information flows covering the existing systems (e.g., accounts payable, accounts receivable, capital accounting) as well as proposals for functional and organizational alterations.

To limit further delays in the implementation and to ensure the development of a functioning and sustainable accounting and finance system within the term of the project, it is strongly recommended that intermediate or periodic product output targets be established. For example, an "off-the-shelf" accounting package can be installed over a 2-month period. Using such a package would accomplish the short-term goal of producing financial reports but does not deal with the larger issues of data accuracy and organizational reform. Other possible targets are identified in Figure 1.

Figure 1. Proposed Schedule of Activities

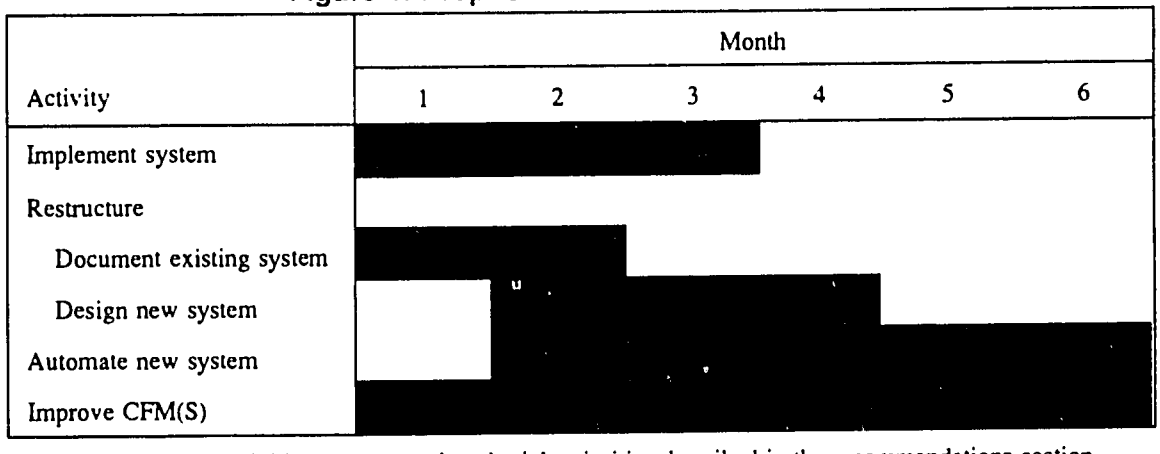

Note: The project definitions correspond to the job priorities described in the recommendations section later in this chapter.

Current plans include the automation of the existing system using a "full" (including general accounts ledger, cost accounting, and financial reporting) accounting package from SYSCOOP (a local vendor). The system, which initially will be run on a minicomputer, is expected to be operational in early 1992. The available version of SYSCOOP is incompatible with the existing mainframe operating system (Unix). However, LBI indicates that SYSCOOP has in the development stage a Unix-compatible system.

CONSULTANT EVALUATION

Technical Competence

From a technical perspective, both LBI and Enge-Rio staff appear competent. The lack of significant progress is partly explainable by conflicting commitments and priorities, which is discussed later in this section. A more complete evaluation must be delayed until significant results are observable. It is, therefore, strongly recommended that a financial specialist conduct a second midterm evaluation in 1992.

Organizational Structure and Responsibility

Currently there is no direct reporting link between the two technical assistance teams (LBI and Enge-Rio) in the finance and accounting area. The contracts delineate the work by managerial (LBI) and technical/line (Enge-Rio) functions and assume that CFM will act as a conduit for the transfer and coordination of the necessary information. However, the flow of managerial information appears to be one of CFM's greatest deficiencies; thus, a better defined reporting relationship is appropriate to maximize the TA effort. Figure 2 shows the current organizational structure of the project.

Figure 2. Technical Assistance Organizational Structure

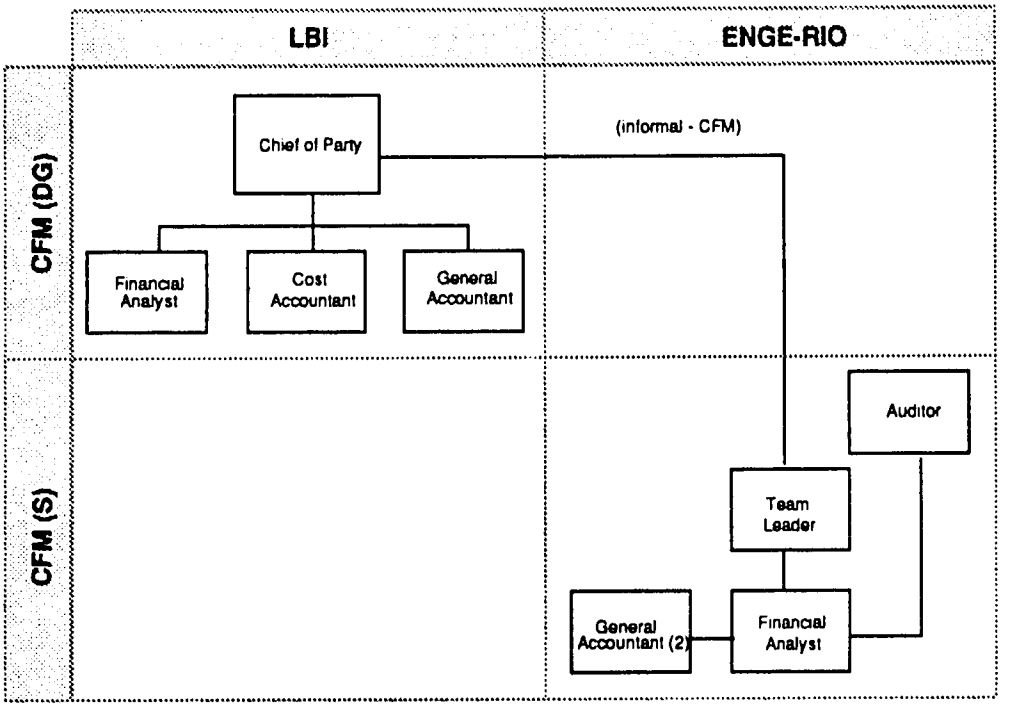

Clearly, the work performed and to be performed by Enge-Rio must be consistent with the guidelines, policies, and recommendations proposed by LBI and supported by CFM. To this end, it is appropriate to establish a direct reporting link between LBI (i.e., the General Accountant) and Enge-Rio's financial team leader. This will allow the two team perspectives (LBI's managerial level and Enge-Rio's line level) to integrate the theoretical design (LBI) with practical implementation limitations (Enge-Rio). However, Enge-Rio should maintain a degree of autonomy within an overall framework to allow the LBI staff to concentrate on system design and training of the appropriate counterparts rather than daily managerial tasks.

RECOMMENDATIONS

The recommendations can be categorized into (1) technical, (2) organizational, (3) functional, and (4) computerization.

Technical

- **Extend chart of accounts.** The consulting team has not completed its review of the chart of accounts. However, it appears that existing plans are limited to a review of accounts of individual entities and not the entire corporation. To enhance the national chart of accounts by which CFM is required to report, prefix codes should be used to identify CFM's subsidiaries. The inherent advantage of this system is that all of the accounts can be maintained on one computer and reported independently or consolidated. An example of the code might be as follows:

01	-	CFM(DG)	
02	-	CFM(S)	Port
03	-	CFM(S)	Railway
04	-	CFM(C)	Port
05	-	CFM(C)	Railway
06	-	CFM(N)	Port
07	-	CFM(N)	Railway

The prefix codes require additional input (in this example a two-character field) and, therefore, may lead to additional input errors (e.g., crediting or debiting the wrong subsidiary). These errors, however, can be minimized with appropriate entry and edit controls.

Furthermore, by compartmentalizing the subsidiary accounts the subsidiary organizations can be added or deleted without disrupting the entire system (see next section).

Organizational

- **Centralize the accounting function.** The technical assistance team's reorganization plans do not go far enough; they are limited to CFM(DG) and CFM(S) and, in the view of the evaluation team, have other relational inconsistencies. In order to maximize the available skilled manpower, the accounting functions of CFM(S), CFM(C), and CFM(N) should be consolidated under the direction of CFM(DG). Supported by automated accounting ledger, reporting, and costing systems a relatively small group of skilled accountants and financial analysts could support CFM(DG) and its subsidiaries.

As identified in previous evaluation reports, CFM's accounting functions lack qualified managers. The situation is exacerbated by its horizontal and compartmentalized organizational structure, which, by nature, requires more mid-level managers. It is reported that CFM has fewer than 25 employees with accounting or economic degrees. While these individuals may not be good managers they represent the technical base upon which the system or organization must be built.

Maintaining independent accounting groups for each of the three subsidiaries and CFM(DG) is not justified by existing or even projected levels of traffic. CFM(S) Finance alone is estimated to have 325 employees. Assuming an annual revenue of $20 million, the average revenue per accounting employee is approximately $60,000. This value is 50 to 100 times lower than a comparable statistic for a large U.S. railroad.

Within a centralized accounting organization, initial data collection and entry (into the automated system) would be provided by the subsidiaries. This would be a clerical function with no independent consolidation or analysis. The format of the entry into the "system" could be made directly into an on-line computer terminal or by forwarding (mail/fax) the primary documents to a central input center. Reports generated automatically from the integrated accounting system would be analyzed by the centralized financial analysis section [also under the supervision of the Director of Finance CFM(DG)] and then forwarded to the various subsidiaries for appropriate managerial action.

The structure of the centralized accounting and finance organization can be established external to CFM, or receive information processing requests from other companies outside of CFM, or both. The centralized accounting organization acts an independent accounting company to which all of the CFM organizations have contracted to perform their accounting functions.

The advantages of centralization are as follows:

— Reduced skilled manpower requirements. The centralized system will require substantially less skilled manpower than three redundant accounting organizations required by each subsidiary.
— Consistent procedures and policies
— Improved comparative evaluations and efficient use of scarce resources. With one centralized department responsible for evaluating project alternatives, using consistent procedures and policies, the projects can be objectively prioritized, thereby maximizing financial resources.

Conversely, the disadvantages of centralization are as follows:

— Reduced manpower needs. By definition, a reduction in the number of departments or other organizations responsible for preparing and analyzing accounting data means the number of unskilled labor required will decrease substantially. The impact will be magnified as the process is automated. Although staff reduction is generally considered a benefit of reorganization, given the political difficulties of labor downsizing in the current situation the value of the benefit is reduced.
— Decrease in responsiveness. Theoretically, a centralized organization has the potential to become more removed from the needs of the user (operations, commercial, etc.) departments because of the greater distance from those functions. This can, however, be counterbalanced through increased formal interaction between organizations.

If the available communication infrastructure is insufficient to support centralization of the accounting and finance function within CFM, the individual subsidiaries should be required to contract out the accounting work to the private sector. If the functions are contracted out, the

internal audit function remaining within CFM becomes significantly more important because it must be able to perform audits of the contracted accounting firm.

- **Organize accounting and finance.** Once accounting activities are centralized and automated, substantial organizational changes are required to streamline the reporting process. There are multiple options, depending on both the overall structure desired (horizontal vs. vertical) and the skill level of the available manpower pool. Figures 3 and 4 show two alternatives.[7]

  The primary difference between the alternatives is the type of organization—horizontal or vertical (multitiered). A horizontal organization places more administrative responsibility on the director than does a vertical organization. The multitiered scenario requires three strong managers with good administrative skills, excluding the computer support or audit functions, and three weaker managers. In contrast, the horizontal structure requires five strong managers. Other variations to the organizational structure are possible depending on the managerial resources available.

  The audit function is purposely excluded from both organizational alternatives. By placing audit under the control of the finance department implicit limits on the impartiality and scope of work are established. Although the primary role of the audit department is to review financial information, it should have the responsibility and capability to examine all functions of the corporate entity.

  As an alternative to reporting to the Director of Finance, the audit group could report to directly to the Director General.

Functional Responsibility

- **Examine relationship between the technical assistance team (LBI/Enge-Rio) and CFM.** The urgency to establish an organization that can produce accurate, consistent, and timely information suggests that the TA team should have minimal involvement in CFM's day-to-day accounting and financial operations. To set up an operational accounting system as soon as possible the emphasis of the available resources should be directed to the task of organizational restructuring. Until a reliable system is functioning, meaningful financial reports cannot be produced.

  In this regard, the creation of historical accounting information does not appear to provide any significant value. Even if the Coopers and Lybrand opening balances are accurate (and there is considerable question that they are—for example, fixed assets, accounts receivable), the 1989, 1990, and 1991 data are suspect because of the continued deficiencies within the current organizational and reporting system.
- **Determine the priorities of the technical assistance team.** Because of the aforementioned problems and urgency, the technical assistance team's priorities should be re-evaluated in view of the following recommendations. Table 2 summarizes who is responsible for each activity. (See Figure 1 for schedule of implementation.)
  1. *Install "off-the-shelf" financial package to maintain CFM(S) accounting records and prepare periodic financial reports.*
     — Accuracy of the data should be limited to easy, quick improvements of the existing data.

[7]The computer support area could be a short-term organization. Once CFM's accounting needs have been fulfilled and are producing timely and reliable information, the function could be handed over to CFM's Informatics.

Figure 3. Organizational Structure of Accounting and Finance Alternative 1 (multitiered)

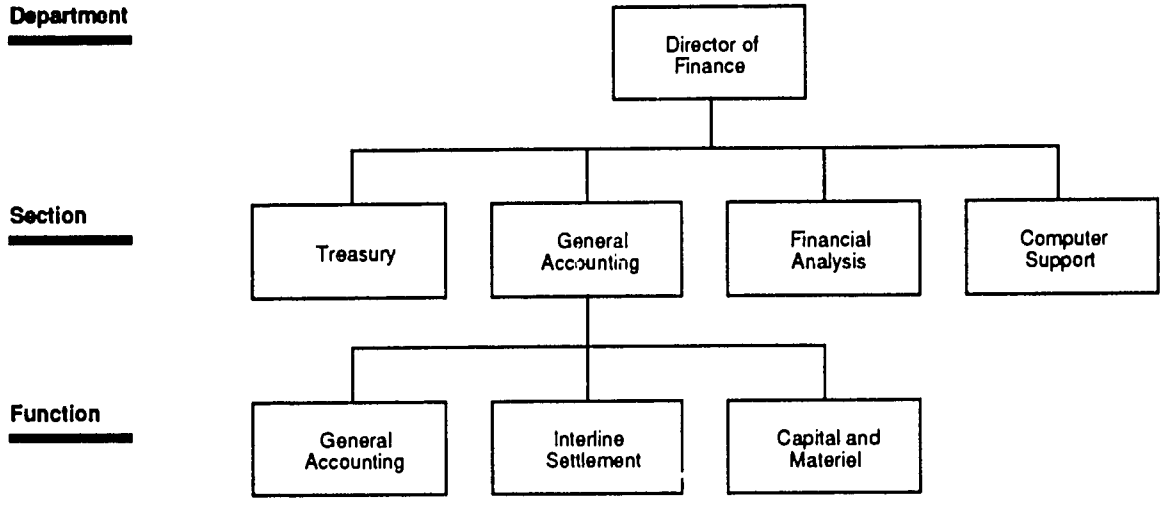

Figure 4. Organizational Structure of Accounting and Finance Alternative 2 (horizontal)

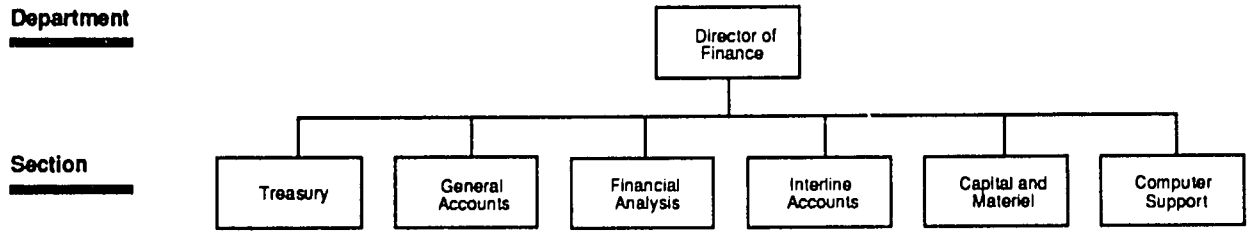

Organizational Responsibility

● Treasury	Cash management Treasury
● General Accounting	Accounts payable Accounts receivable --Billing --Cash collection --Cash allocation Financial reporting General accounting Contract administration
● Interline settlement	Revenue division Equipment service (car hire)
● Capital and Materiel	Store accounting --Materiel receipt --Inventory control --Materiel disbursement --Fixed asset --Asset installation --Depreciation
● Financial Analysis	Cost accounting Budget creation/control Financial analysis --Capital evaluation --Project evaluation
● Computer Support	Support all accounting functions

Table 2. Project Responsibilities

Activity	Primary Responsibility	Support
Implement system	LBI-GA ER-TL	ER-GA
Restructure	LBI-GA, LBI-FA	LBI-CA ER-TL
Automate	LBI-GA, LBI-SA	All others
Carry out CFM improvements	ER-GA, ER-FA	—

Key: ER = Enge-Rio, LBI = Louis Berger International; CA = Cost Accountant, FA = Financial Analyst, GA= General Accountant, SA = System Analyst, TL = Team Leader.

— The system should be viewed as a "throwaway" that will be replaced by an integrated accounting and finance system once the other objectives (e.g., functional reorganization) have been met.

The Enge-Rio team leader and the general accounting team, supported by LBI's general accountant, should implement this system within 1 to 2 months.

2. *Carry out organizational restructuring.* Among the activities included in organizational restructuring are creating detailed documentation of the existing accounting functions (including accounts receivable, accounts payable, etc.) and proposed design changes assuming centralization and automation. The proposed system design must incorporate existing and desired relationships with other departments or functions.

   LBI's general accountant, supported by the rest of the LBI team (ensuring an integrated system), and Enge-Rio's team leader, financial analyst, and auditor should implement this recommendation.

3. *Automate the accounting system.* Automation must support the proposed system. Some modification of a packaged "full" (general ledger, cost, financial reporting) system will be required.

   The team should consist of the LBI system analyst supported by the rest of the LBI team and the Enge-Rio team leader.

4. *Support CFM(S) Accounting Department.* The balance of the Enge-Rio staff's time (excluding the auditor) should be spent on verifying accounting data for accuracy, identifying manpower skills, and cross-training CFM staff.

5. *Perform other required duties.* Numerous additional projects are necessary to support and supplement the reorganization and automation of CFM's accounting functions. For example, evaluation of capitalization policy and evaluation of depreciation policy in the General Accounting section, and development and implementation of performance evaluation measures and preparation of supplemental or special-purpose reports in the Financial Analysis section.

6. *Perform other duties as requested by CFM.* In order to complete the desired goals of this program and have in place a functioning and supportable system, it is essential that requests for help on temporary or miscellaneous short-term problems be handled as in the past, for example, with CFM staff.

Coordinate between technical assistance consulting teams. Although the technical assistance teams have substantially different tasks, a formal hierarchical reporting structure between LBI and Enge-Rio is recommended to ensure necessary coordination. However, Enge-Rio should be given guidelines, established by LBI, by which to perform daily activities independently. To date, attempts to coordinate efforts voluntarily have not always proved successful. The relative autonomy of Enge-Rio removes LBI from the need to perform day-to-day administrative and managerial duties with the Enge-Rio team. (This is consistent with the recommended priorities of LBI listed below.) At the same time, by working within guidelines established by LBI, Enge-Rio is performing work consistent with the longer-term plan for CFM finance.

As shown in Figure 5, the direct reporting link should require the Enge-Rio team leader to report directly to LBI's chief of party (1). Direct reporting of Enge-Rio staff to LBI staff (2) should be considered by project. General Accounting has the greatest need for coordination.

Figure 5. Proposed Coordination of Technical Assistance

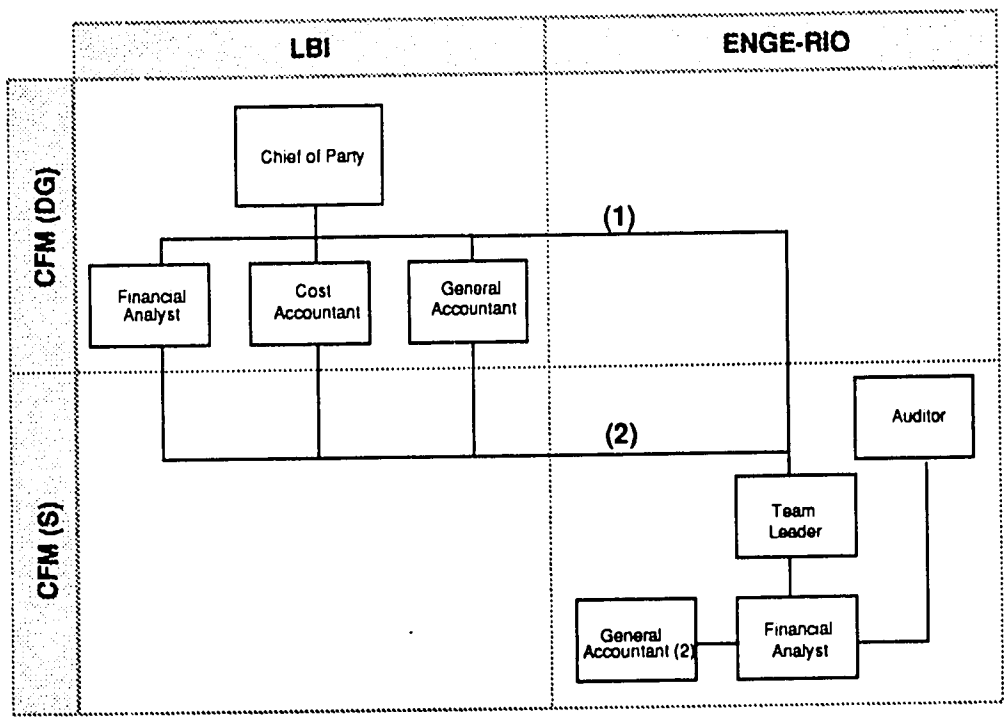

Computerization and Automation

A recent report on CFM computerization discussed at length the choices in alternative accounting and finance packages as well as the system structure. What needs to be emphasized is that in order to obtain accurate, detailed, and timely information an automated system supporting a redefined accounting organization must be installed as soon as possible, even if it is a "throwaway," that is,

replaced in the future. Without such a system CFM will not be able to attain its financial and accounting goals.

A completely manual system, even assuming a competent staff, would be strained to produce timely and accurate information given the complexities and diversity of CFM's operations. Given the skill levels (as measured by past and current performance) of the CFM staff, the need to integrate information, and the desire to produce timely reporting, it is highly unlikely that a workable manual system could be developed.

To limit input and data errors, an automated system should be made as simple as possible, with entry screens prompting for input and requiring verification of input. Integration with other systems (e.g., inventory control, cost accounting, operational statistics) is essential. In the early stages of system development, integration can be as simple as the physical transfer of data on floppy disks, which can later be upgraded to electronic transfer.

LBI indicates that a turnkey or prepackaged system can be installed and operating by early in the second quarter of 1992. This should be vigorously pursued.

Opening Balances

Once a system has been designed and before full implementation, an external accounting firm *must* determine beginning balances. The work performed by Coopers & Lybrand has neither the level of detail (e.g., market valuation of fixed assets) nor the timeliness (January 1, 1989 opening balance) that required.

Concurrent with the development of a revised accounting function, plans must be developed and implemented to contract with an external firm to create opening balances. A logical target date for both the opening balances and the start-up of a fully functional and integrated accounting system is January 1, 1993.

8. Finance and Support Functions

BACKGROUND

With the failure of the general accounting function, the supporting systems (cost accounting, financial analysis and reporting, and internal audit) are virtually nonexistent. Previously established cost or result centers not only fail to represent meaningful areas—and consequently do not provide sufficient information to monitor and control costs in the company's operations—but they have not been used since 1988. Financial analysis and reporting is theoretically possible, but delays and the questionable accuracy of the general ledgers have negated the informational value of the resulting reports. The most recent closed or completed accounting period (ignoring accuracy and completeness) is October 1990.

PROJECT REQUIREMENTS

Given continued subperformance, the Mozambique component of the RRSS project includes funds for substantial reform of the accounting and finance functions. The objectives in the financial support functions include the following:

- Develop meaningful cost accounting centers and implement a supporting cost system, by (1) coordinating with the General Accountant the development of a revised chart of accounts, and (2) providing the necessary information to support the construction of a tariff structure.
- Prepare and follow procedures for creating a budget for CFM(DG) and CFM(S).
- Develop procedures and prepare financial statements, including balance sheet, profit and loss, and cash flow.
- Develop an internal audit function.

PROJECT STATUS

As indicated in the previous section, the LBI/Enge-Rio team has, for the most part, been in place less than 2 months. As a result, although some preliminary reports documenting required procedures and guidelines have been created, no significant or objectively observable results have been attained. The specific results are amply documented in the monthly reports prepared by LBI.

Cost Accounting

Current activity involves developing cost accounting centers and supporting accounts jointly with the general accountant. Automation options under study include the use of SYSCOOP modules (the system proposed for the general accounting ledger), a system used by the Portuguese national railway, or a system used by the Maputo electric company. All options will require modification. LBI indicates that the system should be operational by the second quarter of 1992.

Financial Analysis

As documented in the LBI's periodic reports, a budget for CFM(DG) covering the remainder of 1991 has been submitted. The balance of the efforts appear to have been spent developing budgeting procedures and some preliminary financial statements. As with the other accounting areas, little objectively observable information has been produced.

CONSULTANT EVALUATION

Technical Competence

The team members appear to be knowledgeable in their respective fields. The cost accountant, however, lacks railroad experience. In most accounting and financial areas, industry specific experience is meaningless. For example, general accounting procedures are similar if not identical whether the company is an airline or a warehouse. Cost accounting, however, requires specific and detailed operational as well as financial knowledge of the industry to develop a comprehensive system that is useful in supporting managerial decisions through cost control or project analysis. The shortcoming of the consultant from an experience perspective can be overcome by his technical expertise (in cost accounting) and the use of the financial analyst's railroad experience.

Priorities

To fulfill the project's requirements within the schedule of the contract and produce a supportable system requires some reordering of priorities.

1. **Support of organizational changes.** Both LBI team members (Financial Analyst and Cost Analyst) should support the design of a centralized and automated accounting and finance function.
2. **Design of cost system.** The team should consist of the LBI cost analyst and financial analyst, supported by the Enge-Rio financial analyst. Development must include frequent and in-depth communication with user departments (engineering, operations, etc.).
3. **Design of budget system and procedures.** The LBI financial analyst has the primary responsibility and should be supported by the other LBI team members and the Enge-Rio financial analyst.
4. **Design of internal audit function.**

RECOMMENDATIONS

General

- **Examine relationship between technical assistance team (LBI/Enge-Rio) and CFM.** The urgency in establishing an organization capable of producing accurate, consistent, and timely information suggests that the technical assistance team should have minimal involvement in the day-to-day financial support operations of CFM. To obtain and make operational cost, budgeting, and financial analysis systems within a reasonable period of time the available resources should be concentrated on design and implementation.

- **Coordinate between technical assistance consulting teams.** As mentioned in Chapter 7, to ensure close coordination of the teams and maximize the effectiveness of the technical assistance team's resources, the Enge-Rio team should report directly to the LBI chief of party.

Financial Analysis

With the current lack of reliable and timely accounting information and the inclusion of financial reporting subsystems or modules within the general accounting ledger systems currently under consideration, it seems inappropriate to spend significant time producing financial statements that are at best of questionable accuracy and may be seriously misleading. The financial analyst's priorities should be redirected to participate in the development of the costing system as well as to continue with the preparation of procedures to prepare and integrate into the automated accounting system a financial budget.

The development of a budget, if viewed in the context of a training exercise—to increase participation and understanding of the budget process for an organization with limited experience (i.e., CFM)—has some value. However, it is extremely dangerous to make difficult managerial decisions on the basis of performance relative to a budget given the information deficiencies used to create the budget, and monitor the results.

The financial analyst should also evaluate, streamline, enhance, and, where feasible, automate the collection and use of statistical data. Statistical data will eventually form an integral part of the evaluation aspect of the financial analysis function.

Cost Accounting

- **Development of cost centers.** Until this point, the development of cost centers and supporting accounts has been made primarily in conjunction with the general accountant. It is imperative that the user departments (operations, maintenance of equipment, maintenance of way, and commercial) be involved early in the development process to increase the user departments' awareness of the system (and its uses) as well as to provide information on the design of useful cost centers, thereby minimizing future revisions.

  From an operational or marketing perspective the system must be able to not only identify costs by line segment, but also indicate location-specific costs for various facilities such as yards, materiel and inventory stores, workshops, and the like.
- **Standard versus average cost accounting.** The consulting team proposes development of a standard costing system. This type of system identifies (usually exogenously through special studies) what it should cost to perform a specific function by unit or fixed volume. When actual expense information is added to the system, it calculates the difference between actual and standard or projected costs. The difference or variance between actual and predicted costs must be analyzed for an explanation.

  Standard costing is similar to variance analysis, which compares actual and budgeted expense levels. The difference between the two is that standard costing adjusts the level of expenses to the volume of traffic. Generally, a budget is built on an assumption of volume and thus is referred to as a fixed budget.

  Standard costing has three significant disadvantages within the current context of use (e.g., CFM): (1) inadequate support of tariff structure, (2) high level of sophistication, and (3) lack of accurate historical data.

1. *Inadequate support of tariff structure.* By definition, standard costing indicates what the service or activity should cost and not what it actually costs. This can lead to misinformed management decisions in establishing tariffs, which in turn can lead to poor corporate financial performance.
2. *High level of sophistication.* When properly employed, standard costing is a very useful yet sophisticated system. To perform to its potential, standard costs must be routinely reviewed and updated to account for any substantial structural changes in the company's operation. For example, if the average number of cars per train increases significantly year to year, with no other changes such as cost escalation, the unit (per car) or standard cost should drop. This change must be identified, analyzed, and finally used to update the standard cost file. Depending on the scope of the specific system, this could require significant skilled manpower resources, which CFM does not have internally.
3. *Lack of accurate historical data.* In order to determine the initial unit costs, accurate time series and cross-sectional data are required. These data should be analyzed using various regression techniques in order to identify the appropriate unit cost. In addition, to the extent that the costs are used to reflect future costs, reliable cost escalation forecasts are essential. At this time, CFM lacks sufficient historical data and the internal resources to perform the analysis necessary to maintain the system.

On the basis of the limitations of the system to support tariffs and the substantial resource requirements necessary to maintain the system, it is recommended that a less sophisticated average costing system be implemented. If at some future point standard accounting becomes desirable it can be overlaid on the existing cost system structure.

An average cost system, based on historical data, will support the creation and maintenance of a tariff structure by providing actual costs per unit of service. To provide the most useful information the data must be as timely as possible; this requirement thus supports the recommendation for automation.

As with all cost systems, volume statistics are essential. Automation and integration of such supporting subsystems must be included with the cost function.

To counterbalance the standard cost system's advantage of internal volume adjustment, a flexible budget approach could be incorporated into the average cost system. Flexible budgeting requires an expense estimate for a given volume of traffic as well as a variability percentage for each expense category. The variability factor, which is developed exogenously, indicates the degree to which the total expense (for a given expense category) will change with a change in one unit of volume.

Although the variability factor does require advance analytical development, the updating or maintenance requirements are very modest.

The use of an average costing system (which must be used initially until sufficient historical data exist to calculate the standard unit costs) will fulfill the requirements of a costing system in the present CFM environment. In this regard, it would minimize the skilled human resources required while supporting the development of a tariff structure, as well as providing information for managerial decisions and financial and project evaluation.

9. Finance Department Manpower Development and Incentives

BACKGROUND

Significant motivational and training problems, as demonstrated by both the questionable accuracy of the accounting and financial data and the lack of timeliness in reporting, exist in the labor force of the accounting and finance functions. Except for top management the labor force is older, has little formal education, and has been performing routine clerical tasks for long periods of time. Preparation of accounting and financial information has replaced the use of such information as the ultimate objective of the accounting and finance functions. The problems of the finance department require complex solutions, including a combination of structural and reporting reorganization, manpower training, and introduction of meaningful incentive programs.

Given the poor results of the finance and accounting functions, the midterm evaluation team identified the need to enhance the training of the labor force so it can support an accurate and timely accounting system.

MANPOWER DEVELOPMENT

No planned or comprehensive training is currently under way, although the technical assistance teams have developed but not implemented a skills audit for the finance and accounting staff. Some on-the-job training has resulted from the interaction between the technical assistance teams and their CFM counterparts.

If the recommendation for a centralized accounting function is implemented, the skills audit must be extended to all CFM subsidiaries and not limited to CFM(DG) and CFM(S).

Until a revised organizational structure and supporting system have been developed (at least in some preliminary form (see discussion in Chapter 7), associated manpower needs have been identified, and existing manpower resource assessments have been completed, detailed technical training is inappropriate.

The goal should not simply be to "train" a fixed number of employees, because that is a means but not an end to solve the problems within the finance department. Rather, the aim should be to develop sufficient manpower resources to support the designed system. At this time, the skill requirements are unknown.

A better use of training aids might be to teach all levels of a reduced labor force rudimentary English so that they may make full use of a wider range of technical and supporting documents and interact with their counterparts on the other regional railroads, external materiel suppliers, and potential foreign customers. It has been reported that a stiff premium (15 to 20 percent) is paid on foreign materiel purchases acquired through middlemen rather than directly from the vendor because of the middlemen's ability to communicate in Portuguese. Language training may provide a strong payback. The technical assistance teams should identify the appropriate source for language training from the several internal (including the regional railroad training school at Maputo) or external options.

INCENTIVES

As with the training function, no significant observable progress has been made in designing a system to enhance employee morale and increase productivity. Incentives can take many forms and can be given (separately or in combination) for individual, group, section, department, or even company performance. Before full development of an incentive program, the system design must be completed. Examples of performance evaluation measurements might include some of the following:

Clerical Level	
Individual	Volume handled (invoices, documents)
	Number of errors/Error rate
	Successful completion of training
	Absenteeism
Group/Section/Department	Volume handled
	Number of errors/Error rate
	Timeliness of reporting
Company	Profitability
Managerial Level	
Individual	Timeliness of reporting
	Number of errors/Error rate
	Volume handled
	Absenteeism of department
	Successful completion of training
Group/Department	Timeliness of reporting
	Accuracy of reporting (externally verified)
	Error rate
	Volume handled
Company	Profitability

In addition, advancement to a higher level position might also require successful completion of training.

10. Inventory Control

BACKGROUND

Like the other accounting and financial support functions, inventory control has virtually no procedures supporting the materiel stores. Materiel inventory records are reported to be outdated, incomplete, or inaccurate, use historical cost in metical valuations, and are not well integrated with other systems. Because of the lack of accurate financial data, poor communication between organizations, and lack of sophistication in modern economic-based purchasing and inventory control techniques, the stores are unable to consistently provide material to meet operating demands. At the same time, the stores have obsolete materiel stocks that have not been requisitioned in years.

PROJECT REQUIREMENTS

Given the poor performance of the materiel stores, the Mozambique component of the RRSS project includes funds to improve the efficiency and integration of the materiel store system. Specific goals of the project include

- Streamlining existing inventory receipt, handling, and distribution functions and establishing and enhancing adequate controls, and
- Developing an automated and integrated inventory control system specifically for diesel electric spare parts provided by USAID that can be easily adapted to cover all of CFM's materiel supplies.

PROJECT STATUS

The LBI team, consisting of one inventory control specialist and one systems analyst, are currently modifying an inventory control system developed for a Brazilian warehousing company. The modified system includes all parts used to maintain the GE U20-C locomotives provided by USAID.

The materiel database of GE parts has been developed, and sample testing of the system's ability to handle inventory changes (receipt and disbursement) is under way. The system is written and maintained in a PC-COBOL environment. COBOL, as noted in the draft version of the report on CFM computerization, is not—due to its age—generally considered user friendly; however, it is supported by CFM's informatics department.

Enge-Rio has two technical assistants involved in the daily operation of the materiel store.

CONSULTANT EVALUATION

On the basis of interviews and the observable products available at this time, the consultants appear to be capable. The inventory control system at this point, in a testing phase, can monitor stocks, identify required materiel when given a program maintenance code, and determine the quantity to be ordered. Significant work still remains, including the calculation of reorder points and integration with

procurement and the accounting system. Initially the materiel could be divided into simple categories (e.g., slow and fast moving) to concentrate the focus of the evaluation on items with higher demand.

Training of counterparts may be a problem because of lack of qualified staff. However, to the extent that the final version of the inventory system is simple to operate (entry prompts, immediate verification and edits of data input by comparing against purchase orders, etc.) and integrated with the complete accounting and computer system, the need for skilled manpower in this area should be limited.

RECOMMENDATIONS

The team recommends the following:

- **Coordinate with other consultants.** The technical assistance team is coordinating its efforts with the Portia consulting team, which is analyzing the existing procurement and materiel receipt procedures for the port and should be proposing recommended changes. Neither the inventory control system nor the general accounting system has been developed sufficiently to analyze integration requirements.

  The development of desirable information flows and specific requirements to support a fully integrated purchasing, inventory, accounting system requires close coordination with the balance of the LBI consulting team. The organizational restructuring of CFM's accounting and finance functions will affect the procurement and materiel stores. It is essential in developing an integrated system that the reorganization include the materiel and purchasing functions to allow continuous communication on current inventory stocks to general accounting, periodic materiel disbursements to general and capital accounting, and inventory replenishment requirements to general accounting and purchasing and procurement.

  In addition, the current project should continue, and where possible expand, its coordination with Portia to avoid (or minimize) duplication of effort in evaluating and developing a total inventory control (receipt, stock, disbursement) system. In addition, the port and railway inventory systems (as well as CFM's general ledger system) must be compatible.
- **Make financial enhancements.** The current inventory control system monitors quantity. To obtain the maximum benefit from the development of the inventory control system, it is essential that the full costs associated with procurement of the materiel stock be included in the system. These costs include (but are not limited to) purchase price, freight, insurance, duty, stevedore charges, and other port-related fees.

  With the inclusion of materiel value, unit cost calculations can be internalized, eliminating the need for most of the accounting functions currently performed at the materiel stores. However, certain functions (materiel receipt, inventory verification, etc.) would still be required.

  Recent discussions with LBI indicate that adding financial information (including valuation of the materiel in both domestic and foreign currency) to the inventory system has been discussed and will be done. The use of foreign-denominated valuations limits the impact of domestic inflation and may provide a more accurate monitoring and estimated replacement cost projection tool.
- **Use bar coding.** With the successful completion of an integrated inventory system, even with entry and verification screens and edit programs, the potential remains for data input errors. The number of errors can be minimized by using bar coding on all materiel transactions.

11. Management Information System and Corporate Planning

DEVELOPMENT OF INFORMATION SYSTEMS

The existing organizational structure of CFM includes an informatics department. The functions of this department are not well defined, and it cannot be said that any information system now exists within the enterprise. There is a proposal to expand the originally intended effort to develop a management information system (MIS) within CFM under the RRSS; instead of limiting MIS development under the project to monitoring locomotive maintenance and utilization, the proposed effort would include computerization of the informatics department and other functions.

It would certainly be desirable for CFM to have a developed information system that is computerized. Before this is done, however, it is desirable determine the optimal future functions and structure of the enterprise. It would *not* be desirable to design an information system that would help perpetuate functions that ought better to be undertaken outside the enterprise, or to continue the collection and storage of data that serve no useful purpose. It is, moreover, questionable whether CFM should strive to separately develop an informatics department and a planning department. This objective has dubious desirability for two reasons.

First and most important, the ultimate goal is not the collection but the appropriate use of data, which is determined by the analytical talents and efforts of the enterprise's planning body. Second, CFM simply does not have, nor is it about to find, sufficiently and potentially qualified staff to staff both an informatics department and a planning department. It is highly desirable in any corporation that the information system be closely integrated with the corporate planning function—for CFM, this argues for the merging of the informatics and planning departments. If this decision is made, current staff will be more nearly sufficient for staffing the merged department, the cost of development and operation will be minimized, and, most important, the merger should best ensure that the future outputs of the department will be useful for management understanding of operational problems, market opportunities, cost-saving possibilities, and options for overall corporate business strategies. Except for the ongoing work of LBI and Enge-Rio, which will lead to some computerization of locomotive maintenance, accounts and financial support, and inventory control, further computerization of a CFM information system should be delayed pending decisions on the desirability of merging informatics with planning and on the optimal structure and functions of the merged body (see discussion of the desirable scope of the CFM planning function in the next section of this chapter).

Computerization of data processing within CFM other than only the MIS and planning should also await certain decisions for the same general reason: *computerization should not be done in a way that will help perpetuate functions and procedures that might desirably be dispensed with altogether or be delegated to others outside the enterprise.* The decisions that need to be made before computerization proceeds in the various areas of CFM operations include, but may not necessarily be limited to, those discussed in the following sections.

Accounting and Finance

The proposal to computerize CFM includes financial functions. Whereas this proposal is certainly desirable in general, it is not desirable that there be an overlap of responsibility between any new

computerization effort and the ongoing technical assistance to the CFM finance and accounts department. Any new effort, therefore, should exclude the finance department. However, it should be understood that the technical assistance team will make full recommendations for computerizing the desirable functions of that department and that the compatibility of the department's data processing system with the overall system of the enterprise will be considered in making the recommendations.

The evaluation team does not recommends extending computerization of finance/accounts functions to the level of CFM(S); instead, such functions should be removed from the CFM(S) level, the reasons for which are discussed in Chapter 7.

Personnel and Manpower Development

Before any effort is made to computerize personnel records of CFM, staff should be reduced by 50 to 75 percent. CFM should probably eliminate the national railway training school at Inhambane, which cannot be operated profitably by the company with the types of training provided there, and the desirability of retaining other training facilities within the enterprise might also be re-examined before any computerization of manpower development activities are begun.

Equipment Maintenance and Utilization

It is highly desirable that records be kept on the maintenance and utilization of each locomotive in the CFM fleets and every wagon and passenger coach owned by the company. Computerization would certainly be helpful in developing and maintaining accurate and up-to-date records, and even in identifying optimal maintenance schedules and equipment retirement programs. Before computerization can be useful, however, a complete inventory must be taken of current equipment, identifying equipment to be retained and equipment to be sold. Thereafter, records should be kept on all equipment items to be retained by the firm; it would be useful to have these records computerized. The evaluation team recommends that workshop operations of CFM railways be phased out by the enterprise in favor of expanded maintenance activities at diesel locomotive running sheds. The team also recommends contracting out heavy maintenance and major repairs of locomotives, and perhaps also much of the maintenance and repair of wagons and coaching stock. Computerization of equipment records might desirably await decisions on the future scope of CFM railway equipment maintenance.

Stores

CFM currently operates far too many stores, and there is room to reduce both the number of stores and the size of inventory. Stores and inventory control are currently being computerized in some form under the RRSS; in the view of the evaluation team, this limited effort should continue until it is complete. Any broader effort to computerize the stores and inventory control functions, however, should proceed only after decisions on the reduction in the number of stores and in the overall size of inventory.

DEVELOPMENT OF THE PLANNING FUNCTION

With all of the changes required within CFM to make it an efficient, effective, and commercially profitable enterprise, it is not easy to identify the single change that is most urgently required; however, one candidate is development of the enterprise's planning function. This is especially

important if the function is viewed broadly to include development of the firm's information system, including mechanisms for the monitoring of policy, project, and program implementation.

CFM has taken the first two essential steps toward developing an effective planning function by establishing (in April 1991) a separate planning department and appointing a director who understands the concept of planning and who appears to be the appropriate person for the post. Beyond this, however, little has been done to develop the department. The limited staffing that has been done may have provided the department with the nucleus for a statistical function, but not for a real planning function. The role of the department has yet to be defined, and therefore it has also not been possible to identify the optimal organizational structure and desirable staffing and equipping of the department.

For reasons discussed in the preceding section of this chapter, the evaluation team deems it desirable that consideration be given to the merging of the planning and informatics departments. In that case, the planning department might desirably consist of the three sections identified and briefly discussed in the following sections.

Information Services

The information services section should have sole responsibility within CFM for preparing statistical reports. It should also be responsible for acquiring and maintaining reference materials (in a CFM library) and for obtaining all of the information available within CFM that is required for the planning function, but not for current Mozambique and regional external information. Finally, information services should have overall responsibility within the enterprise for ensuring that computerized data processing is working correctly, including installation of new software. In order to best carry out its functions, the section must be connected to other CFM computer networks, from which it can then easily select the information required for both planning and statistical purposes. The section will require staffing by three professionally qualified computer scientists, a professional librarian (library science graduate), a nonprofessional assistant librarian, and four other technical staff, trained in the input of data to the system and in data retrieval. One of the professional staff would be manager of the section; a second would be primarily responsible for preparation of statistical reports; and the third would be primarily be responsible for training of CFM personnel to use computers. These same people would need to shoulder CFM computer systems troubleshooting responsibilities as well. [Like other CFM functions discussed in this report, it is unlikely that it would be either possible or economic to attempt to develop information services expertise in more than a single office in the short to medium term. Consideration should not be given, therefore, to any attempt to develop such expertise at the CFM(S) level.]

Planning

The planning section should not, as it does now, concern itself with preparing statistical reports. It should, instead, be highly analytical and should prepare, for management, reports that analyze the adequacy of current operations of the various operating entities of CFM, identifying problems and possible solutions and recommending optimal courses of action.

The planning section should also identify, analyze, and make recommendations on market opportunities and identify cost reduction opportunities. It should work closely with both the finance department and internal audit in these investigations. Finally, management should look to the planning department to prepare multiyear corporate plans that include corporate goals for the period considered, strategies to achieve those goals, and identification of the means to achieve those strategies. (CFM urgently requires such a plan, but the information on which it would need to be based is not now

available. The team recommends carrying out a series of studies that would provide a basis for preparing a multiyear corporate plan for the enterprise.[8]

The planning section should be staffed by four professional transport planners, two of whom should have educational training in economics and financial analysis and two of whom should be transport engineers. The section should also include two to four technical staff to assist in periodic survey work.

Implementation Monitoring

CFM does not now have any body within its organizational structure that is responsible for monitoring the implementation of management decisions, including policy decisions and investment and other projects and programs. Once the planning function is well developed within CFM, implementation monitoring will be a natural extension of that planning function: The planning body will have identified the desirability of a policy change, project, or program, and will bes. know the desirable results from such a policy and how implementation should proceed. The implementation monitoring section should not only monitor progress, but also identify implementation problems, analyze them, and recommend desirable actions to improve implementation, or, when necessary, to alter the design of whatever is to be implemented.

To carry out this function effectively, the implementation monitoring section should be staffed by three professionals, one with expertise in project implementation (this knowledge can be obtained from short courses) and the others with knowledge of port and railway operations.

[8]See further discussion of this recommendation in the supplementary report, Chapter 8 and Appendixes A, B, and C.

Appendix A

LOCOMOTIVE MAINTENANCE SCHEDULE AND FORMS

Burlington Northern Railroad maintains its fleet of about 2,300 locomotives on a series of 92-day cycles. As required by the Federal Railroad Administration, every 92 days each locomotive is periodically inspected. At this time, Burlington Northern also performs preventative maintenance activities designed to enable the locomotive to operate failure free to the next 92 day inspection.

Three 92-day maintenance activities are performed during a year, followed by a 1-year maintenance activity. The cycle is then repeated for the second and third years, also with an annual checkup at the 2- and 3-year marks. After the 3-year maintenance activity, the 92-day maintenance cycle begins again. Thus, there are twelve 92-day maintenance activities over a 3-year period, with more comprehensive activities scheduled at the 1-, 2-, and 3-year intervals.

Contained in this appendix are the examples of the maintenance activity documents used for Burlington Northern's GE C30-7 locomotive fleet. The maintenance activity is targeted to this specific type of locomotive and is performed at a 3-year interval.

In addition to performing maintenance activities based on time, Burlington Northern also performs preventive maintenance on locomotive components (pumps, nozzles, main, connecting rod bearings) on the basis of mileage.

The maintenance sheets provided on the following pages are included for the benefit of CFM as examples of successful locomotive maintenance documents.

```
*************************, ***************************************************
*****************************************************************************
*****************************************************************************

                                                                    PAGE: 001
MMC636  05 FEB 90  10:13  LOCOMOTIVE MAINTENANCE SHEETS     UNIT #: BN 5040

UNIT #: BN 5040            BN P/N: LOC-C307                EMP #: 7149461   SHOP: ---
KEYWORD/DESC: LOCOMOTIVE     , C307   C 3000HP 6 AXL


==================  MAINTENANCE ACTIVITY SIGN OFF SUMMARY  ==================
|
|MAINT. ITEMS (DAYS) GE.                                                   |
|                                                   PROFILE #:PRO-DAY/GE/001 |
|   -----> 1104 DAY MAINTENANCE LEVEL 8 YEAR 3 (S&E CODE H3B)               |
|                                                                           |
|--- TO SIGN OFF MAINTENANCE ACTIVITY(S), USE FORMAT MMC6420A ----          |
=============================================================================
```

UNIT #: BN 5040

MAINTENANCE ACTIVITY(S)

MAINT. ITEMS (DAYS) GE.

MAINT DATE: -- --- --

SELECTED ACTIVITY ----> 1104 DAY MAINTENANCE LEVEL B YEAR 3 (S&E CODE

MAINTENANCE INSTRUCTIONS

ITEM #	INBOUND CHECK & RUNNING MAINT. (RECORD DEFECT)	SIGNATURE
998	##### WHEN YOU START A JOB, START IT SAFE #####	
185	CHECK ALL FLUID LEVELS. > AIR COMPRESSOR. > ENGINE. --------- > COOLING WATER. --------- > GOVERNOR --------- > AUX GENERATOR DRIVE. ---------	_____
100	REMOVE CYLINDER COVERS INSPECT ENGINE OVERHEAD.	_____
101	PULL RACKS POP CYL(S)-LISTEN FOR UNUSUAL NOISES.	_____
182	RECORD HORSEPOWER READING. (_____)	_____
184	RECORD LOAD REGULATOR POSITION. (_____)	_____
300	CHECK AUXILIARY GENERATOR VOLTAGE AT IDLE AND #8 THROTTLE WITH SYSTEM WARM & STABLE. (_____)	_____
126	RECORD ENGINE COOLING WATER TEMPERATURE. > BEFORE LOADING. (_____) > AFTER LOADING. (_____) ---------	_____
192	CHECK & RECORD PRESSURE READINGS/SETTINGS. > OIL PRESSURE. IDLE.____ #8 POS.____ > RACK SETTING-20M IDLE.____ #8 POS.____ > FUEL PRESSURE. IDLE. #8 POS.____ > TURBO PRESSURE. IDLE.____ #8 POS.____ > POWER PISTON GAP. IDLE.____ #8 POS.____	_____
462	TAKE CRANKCASE MANOMETER READING. THROTTLE #8 FULL LOAD. (_____)	_____
117	CHECK COOLING SYSTEM FOR LEAKS.	_____
186	CHECK EXHAUST SYSTEM FOR LEAKS.	_____
189	CHECK FOR OIL LEAKS.	_____
188	CHECK FOR CLEAR STACK.	_____
180	CHECK INTAKE AIR MANIFOLD & TURBOCHARGER DISCHARGE ELBOWS FOR LEAKS. THROTTLE #8 FULL LOAD.	_____
146	INSPECT FUEL SYSTEM, HOSES & PIPING. INSP. FUEL CROSSOVER SECUREMENT & BRACKETS.	_____
153	CHECK OPERATION & POTENTIAL CONTROL OF DYNAMIC BRAKE. > EXCITATION VOLTAGE (GA TO GN). > TRAINLINE POTENTIAL (4 TO 24). ---------	_____
183	CHECK FOR LOW VOLTAGE GROUNDS. USE 15W LIGHT BOTH POS. & NEG. TO GROUND.	_____
131	CHECK OPERATION OF GROUND RELAY. INSPECT OR REPLACE CUTOUT SWITCH SEAL.	_____

UNIT #: BN 5040

132 PERFORM OPERATIONAL WHEEL SLIP TEST.
193 CHECK WIPER OPERATION, BLADES, ARMS & MOTORS. ..... |_____
102 CHECK OPERATION; > WATER COOLER. ..... |_____
> TOILET. _____ |
> CAB HEATERS. _____ |
103 TAKE SAMPLES-SEND TO LAB. - _____..... |_____
> WATER. |
> OIL. _____ |
105 SERVICE AIR COMPRESSOR. _____ ..... |_____
> TAKE OIL SAMPLE. |
> CHECK PRESSURE. _____ |
119 CHECK OPERATION OF ENGINE PROTECTIVE DEVICES. _____ ..... |_____
> CRANKCASE PRESSURE. |
001 TEST AIR BRAKE EQUIPMENT PER RULE 212. _____ ..... |_____
002 TEST SAFETY CONTROL DEVICE(S) OPERATION & ..... |_____
SEALED PROPERLY.
> SPEED RECORDER O/S SYSTEM. _____ |
> ALL ALERTER RESET FUNCTIONS. _____ |
003 TEST; > HORN AND BELL. _____..... |_____
> SANDERS. _____ |
004 CHECK FOR CORRECT AIR PRESSURE SETTINGS: _____ ..... |_____
> MAIN RES.(130 TO 140 PSI) |
> CONTROL AIR. (70 PSI) _____ |
> BRAKE PIPE. (90 PSI) _____ |
> EQUALIZING RES. (90 PSI) _____ |
> COMPRESSOR CONTROL SWITCH. _____ |
005 CHECK AIR DATES BN FORM 15201 & CONDITION _____..... |_____
OF HOLDER.
006 CHECK AIR HOSES & GASKETS. ..... |_____
007 CHECK AUTOMATIC DRAIN VALVES FOR PROPER OPERATION ..... |_____
008 DRAIN MOISTURE FROM BOTH MAIN RES./FILTERS/ ..... |_____
DIRT COLLECTERS/INTERCOOLERS.
120 CHECK OPERATION OF EMERGENCY FUEL SHUT OFF ..... |_____
FROM ALL LOCATIONS.
998 ==========..... |_____
COMMENTS: INBOUND DEFECTS OBSERVED. |
==========
- THE BEST SAFETY DEVICE KNOWN IS A CAREFUL MAN - |
.
==========
.
==========
.
==========
.
==========
.
==========
.
==========
.
.
DATE:_____. SHIFT:____. SUPERVISOR'S SIGNATURE.....|_____

UNIT #: BN 5040

ITEM #	MEASUREMENT FOR GE 16 CYLINDER ENGINE.	SIGNATUR
212		

```
*****************************************************
*        LOCOMOTIVE COMPRESSION TEST RECORD         *
*****************************************************
* R1        | R2        | R3        | R4            *
*---------------------------------------------------*
* R5        | R6        | R7        | R8            *
*---------------------------------------------------*
* L1        | L2        | L3        | L4            *
*---------------------------------------------------*
* L5        | L6        | L7        | L8            *
*****************************************************
*****************************************************
COMMENTS:
*---------------------------------------------------*
.
*---------------------------------------------------*
.
*---------------------------------------------------*
.
*---------------------------------------------------*
.
*---------------------------------------------------*
.
*---------------------------------------------------*
.
*---------------------------------------------------*
.
*---------------------------------------------------*
.
*---------------------------------------------------*
.
*---------------------------------------------------*
.
*---------------------------------------------------*
.
*---------------------------------------------------*
.
*---------------------------------------------------*
.
*---------------------------------------------------*
.
*---------------------------------------------------*
.
*---------------------------------------------------*
.
*---------------------------------------------------*
.
*---------------------------------------------------*
.
*---------------------------------------------------*
.
*---------------------------------------------------*
.
*****************************************************
```

ITEM #	COMMUNICATION DEPT. RADIO INSPECTION	SIGNATURE
209	VHF POWER OUTPUT ___ VHF RECEIVER SENS ___ EOT SENS ___ VHF VSWR ___ DEVIATION ___ HANDSET ___ DTMF PAD ___ AUDIO OUTPUT ___ INTERNAL MIC ___ PHYSICAL INSPECTION ___ EOT VSWR ___ TECHNICIAN INITIALS ___	

ITEM #	ENGINE SHUTDOWN MAINTENANCE. (GE)	SIGNATURE
998	========== == == == SAFETY LETS YOU ENJOY LIFE == == ==	
212	COMPRESSION TEST ALL CYLINDERS.	
115	PRESSURE TEST COOLING SYSTEM @ 20 PSI.) MAKE CRANKCASE - AIR MANIFOLD INSPECTION. (REMOVE END PLATES) _____) INSPECT COOLING SYSTEM & PIPING. _____	
133	INSPECT SNYDER FUELING EQUIPMENT.	
121	DRAIN CONDENSATE FROM FUEL TANK SUMP.	
156	INSPECT & CLEAN FUEL TANK SIGHT GLASS/LEVEL GAUGE.	
206	SERVICE FUEL SYSTEM. CHANGE ALL FILTERS & CLEAN STRAINERS. DRAIN FILTER HOUSING.	
106	CLEAN OVERSPEED GOVERNOR OIL SUPPLY LINE SCREEN.	
141	DRAIN/INSP/CLEAN LUBE OIL FILTER HOUSING.) RENEW LUBE OIL FILTERS. PART NUMBER 2X4223. _____) CLOSE & SAFETY WIRE DRAIN VALVES. _____) INSPECT FILTER TUBES FOR CRACKS. _____ OR CRACKS. _____	
208	CHANGE & CLEAN ENGINE AIR FILTERS.) CHANGE "BAGGIE" AIR FILTERS. _____) CLEAN PLASTIC PRIMARY FILTERS. _____) INSP/CLEAN CHAMBERS & COMPARTMENTS. _____ CHANGE V-PACK PAPER AIR FILTERS.(IF EQUIPPED) (PAPER CARTRIDGE FILTERS CHG. EVERY 184 DAYS)	
449	CHANGE ELECTRICAL CABINET COOLING AIR FILTER.	
142	CHECK OPERATION OF DIRTY AIR DISCHARGE DAMPER.	
600	ENSURE AIR INLET DOOR TO ENGINE AIR FILTERS IS OPEN IN WINTER - CLOSED IN SUMMER.	
424	CHANGE AIR COMPRESSOR OIL & FILTER.	
203	CHANGE AIR COMPRESSOR INTAKE AIR FILTERS.	
451	CHANGE OIL IN COOLING FAN GEAR BOXES.	
429	CLEAN EQUIPMENT AIR FILTERS (BELLY FILTERS).	
400	RETORQUE BASE BOLTS & CHECK WEDGE;) ENGINE BASE. _____) GENERATOR BASE. _____) AIR COMPRESSOR BASE. _____) RADIATOR FAN. _____) OIL COOLER. _____) OIL FILTER TANK. _____) CARBODY BOLTS. _____	
214	REMOVE & CLEAN WATER STORAGE TANK DRAWER SCREEN.	

ITEM #	COMMUNICATION DEPT. RADIO INSPECTION	SIGNATURE
209	VHF POWER OUTPUT ___ VHF RECEIVER SENS ___ EOT SENS ___ VHF VSWR ___ DEVIATION ___ HANDSET ___ DTMF PAD ___ AUDIO OUTPUT ___ INTERNAL MIC ___ PHYSICAL INSPECTION ___ EOT VSWR ___ TECHNICIAN INITIALS ___	.....

ITEM #	ENGINE SHUTDOWN MAINTENANCE. (GE)	SIGNATURE
998	========== == == == SAFETY LETS YOU ENJOY LIFE == == ==	
	==========	.....
212	COMPRESSION TEST ALL CYLINDERS.	.....
115	PRESSURE TEST COOLING SYSTEM @ 20 PSI.	
	> MAKE CRANKCASE - AIR MANIFOLD INSPECTION. (REMOVE END PLATES) _____	
	> INSPECT COOLING SYSTEM & PIPING. _____	.....
133	INSPECT SNYDER FUELING EQUIPMENT.	.....
121	DRAIN CONDENSATE FROM FUEL TANK SUMP.	.....
156	INSPECT & CLEAN FUEL TANK SIGHT GLASS/LEVEL GAUGE.	.....
206	SERVICE FUEL SYSTEM. CHANGE ALL FILTERS & CLEAN STRAINERS. DRAIN FILTER HOUSING.	.....
106	CLEAN OVERSPEED GOVERNOR OIL SUPPLY LINE SCREEN.	.....
141	DRAIN/INSP/CLEAN LUBE OIL FILTER HOUSING.	
	> RENEW LUBE OIL FILTERS. PART NUMBER 2X4223. _____	
	> CLOSE & SAFETY WIRE DRAIN VALVES. _____	
	> INSPECT FILTER TUBES FOR CRACKS. _____	
	OR CRACKS. _____	.....
208	CHANGE & CLEAN ENGINE AIR FILTERS.	
	> CHANGE 'BAGGIE' AIR FILTERS. _____	
	> CLEAN PLASTIC PRIMARY FILTERS. _____	
	> INSP/CLEAN CHAMBERS & COMPARTMENTS. _____	
	CHANGE V-PACK PAPER AIR FILTERS.(IF EQUIPPED)	
	(PAPER CARTRIDGE FILTERS CHG. EVERY 184 DAYS)	.....
449	CHANGE ELECTRICAL CABINET COOLING AIR FILTER.	.....
142	CHECK OPERATION OF DIRTY AIR DISCHARGE DAMPER.	.....
600	ENSURE AIR INLET DOOR TO ENGINE AIR FILTERS IS OPEN IN WINTER - CLOSED IN SUMMER.	.....
424	CHANGE AIR COMPRESSOR OIL & FILTER.	.....
203	CHANGE AIR COMPRESSOR INTAKE AIR FILTERS.	.....
451	CHANGE OIL IN COOLING FAN GEAR BOXES.	.....
429	CLEAN EQUIPMENT AIR FILTERS (BELLY FILTERS).	.....
400	RETORQUE BASE BOLTS & CHECK WEDGE;	
	> ENGINE BASE. _____	
	> GENERATOR BASE. _____	
	> AIR COMPRESSOR BASE. _____	
	> RADIATOR FAN. _____	
	> OIL COOLER. _____	
	> OIL FILTER TANK. _____	
	> CARBODY BOLTS. _____	.....
214	REMOVE & CLEAN WATER STORAGE TANK DRAWER SCREEN.	.....

425 RENEW COOLING SYSTEM PRESSURE CAP(S). INSPECT SEATING SURFACE OF FILLER NECK.

501 RENEW FLUID AMPLIFIER (POWER PILL), INSPECT BEAM ASSEMBLY.

301 INSPECT & LUBRICATE SPICER DRIVE, BLOWER BEARINGS & AIR COMPRESSOR COUPLINGS. (IF EQUIPPED)

310 INSPECT RUBBER COUPLINGS ON FAN DRIVE.

998 ==========

=THERE'S NO MAGIC IN SAFETY ... JUST COMMON SENSE=

145 TOILET MAINTENANCE,

- DRAIN & CLEAN.
- RECHARGE-PROTECT WITH 50% ANTI-FREEZE
- CHECK OPERATION.
- SCRUB & CLEAN WALLS IN TOILET COMPARTMENT.

204 AFTER WASHING LUBRICATE & GREASE LINKAGE.

- GOVERNOR.
- FUEL RACK.
- BELL CRANK IDLER.
- PUMP METER RODS WITH LPS.

436 LUBRICATE TOP RADIATOR FAN BEARING-ADD 3 OZ GREASE

143 CHECK COOLING FAN OIL LEVEL-FILL TO PROPER LEVEL.

106 CLEAN OVERSPEED GOVERNOR OIL SUPPLY LINE SCREEN.

509 RENEW AMOT THERMOSTAT.

510 REMOVE, DISASSEMBLE, CLEAN & TEST FUEL PREHEATER.

998 - THE BEST SAFETY DEVICE KNOWN IS A CAREFUL MAN -

010 CHECK BRAKE CYLINDER PISTON TRAVEL.(RULE 116F)

011 TEST AIR GAUGES (+- 1 PSI). CHANGE 'O' RINGS (SALEM NO. 1476) ON AIR BRAKE GAUGE QUICK DISCONNECT PROBE PLUGS.

012 CHANGE FILTERS IN MR LINE TO D. EQUIPMENT.

015 CHECK CONTROL AIR LEAKAGE (NOT TO EXCEED 3 PSI/MIN IN 3 MIN CHECK).

016 CLEAN AUTOMATIC DRAIN VALVES.

017 CHANGE MR SAFETY VALVE (140 PSI).

018 CHANGE BRAKE CYL. RELAY VALVE (JI.6-16) OR (JI).

019 CHANGE BRAKE PIPE VENT VALVE(S) (NO. 8).

021 CLEAN SAND CONTROL VALVES.

022 CLEAN AIR COMPRESSOR CONTROL MAGNET VALVE.

024 INSP/TEST/LUBE/DATE HAND BRAKE.

025 CLEAN ALL ONE-WAY & DOUBLE CHECK VALVES.

026 CHANGE AUTOMATIC BRAKE VALVE.

027 CHANGE INDEPENDENT BRAKE VALVE.

028 CHANGE CONTROL VALVE & QUICK RELEASE PORTION.

031 CHANGE MU-2-A VALVE.

033 CHANGE BRAKE CYLINDER QUICK RELEASE VALVE.

034 CHANGE CHARGING CUT OFF PILOT VALVE.

038 CHANGE COMPRESSOR SAFETY VALVE (180 PSI).

040 CHANGE 'LINE' FILTERS IN 'ACT' & 'IAR' LINES.

042 CHECK AUX. EMERGENCY BRAKE VALVE FOR PROPER OPERATION AND IDENTIFICATION.

045 CHANGE P-2-A VALVE.

050 RENEW THE CHECK VALVE BETWEEN MAIN RESERVOIR NO.1 AND MAIN RESERVOIR NO.2.

303 SERVICE/INSPECT FIRE EXTINGUISHERS & BRACKETS.

WEIGH AS REQUIRED. CHECK TAG FOR PROPER DATE. .....|_____

197 INSPECT ALL SAND TRAPS, NOZZLES, HOSES & BRACKETS.....|_____

458 INSP./LUBRICATE CARBODY DOORS/HINGES/LATCHES. .....|_____

195 INSPECT UNIT FOR PROPER DECALS. .....|_____

194 INSP. CAB FOR PROPER MISC. HOLDERS & SUN VISORS. .....|_____

461 INSPECT CAB SEATS-REPAIR & LUBRICATE AS REQUIRED. .....|_____

207 LUBRICATE SPEEDRECORDER CABLE AND ANGLE DRIVE.
(IF EQUIPPED) .....|_____

137 CHECK FLANGE LUBRICATOR SPRAY NOZZLE'S. (IF
EQUIPPED)
> USE ADJUSTMENT GAGE FOR CORRECT DISTANCE/
ANGLE TO THE WHEEL. _____
> PROPER SPRAY PATTERN. _____.....|_____

147 INSPECT ALL FLANGE LUBRICATOR SYSTEM FITTINGS,
HOSES & PIPE RUNS FOR LEAKS & PROPER
SECUREMENT. (IF EQUIPPED) .....|_____

170 CLEAN AT FLANGE LUBRICATION AREAS
A. USE HIGH PRESSURE CLEANING MACHINES/OR HAND
CLEAN IF NOT AVAILABLE.
B. AT WHEEL LOCATIONS EQUIPPED WITH FLANGE
LUBRICATORS CLEAN GREASE/DIRT ACCUMULATION
FROM: 1. TRUCK HOUSING _____
2. UNDER FRAME _____
3. INSIDE PILOT _____
4. MU PIPING _____
5. INTERIOR OF STEP WELLS _____
C. REPORT DEFECTS OR PROBLEMS TO SUPERVISOR. .....|_____

148 PERFORM FLANGE LUBRICATOR SYSTEM OPERATIONAL
TEST. (IF EQUIPPED) .....|_____

134 FILL FLANGE LUBRICATOR GREASE RESERVOIR WITH
(SHELL OSSAGE V) GREASE. (IF EQUIPPED) .....|_____

251 INSPECT PACESETTER EQUIPMENT/CONTROL CABLES.
REPAIR/REPLACE AS REQUIRED. (IF EQUIPPED) .....|_____

448 CHECK CALIBRATION OF SPEED RECORDER. RECORD ON
FORMS 15606 & 15841. (OR, IF EQUIPPED WITH PULSE).....|_____

123 CLEAN HEAD OF PULSE RECORDER. .....|_____

049 CHANGE DATA PACK TAPE CARTRIDGE ON ELECTRONIC
EVENT RECORDER. .....|_____

046 CHECK OPERATION OF ALERTNESS DEVICE, IF EQUIPPED.
USE /FOR MMC6300A FOR INSTRUCTIONS TO COMPLETE
ITEM MNT-046. .....|_____

252 REMOVE & INSP. PACESETTER AXLE DRIVE.(IF EQUIPPED).....|_____

124 INSPECT ALL TRACTION MOTORS.
> REPLACE WORN BRUSHES. _____
> CLEAN INTERIOR AS REQUIRED. _____
> INSPECT LEADS, BOOTS, HOSE CLAMPS,
AND CARBODY LEADS. _____
> CHECK TO BE CERTAIN ALL COVERS HAVE GOOD
SEALS AND ARE SECURELY FASTENED. _____
> CHECK ALL GROUND STRAPS. _____.....|_____

139 INSPECT MU RECEPTACLES AND JUMPER CABLES. .....|_____

152 REMOVE AND TEST 27 POLE MU JUMPER CABLES. .....|_____

406 INSPECT & CLEAN MOTOR. RENEW ALL BRUSHES,
> ENGINE FUEL PUMP. _____
> AUXILIARY GENERATOR. _____

	) EXCITER GENERATOR.	
430	LUBE REVERSOR & BRAKING SWITCH DRIVE MECHANISMS.	
128	INSPECT ALTERNATOR SLIP RINGS, BRUSHES & DIODES. NOTE: STEEL SLIP RINGS USE R-318 BRUSHES ONLY. BRONZE SLIP RINGS USE AC-4 BRUSHES ONLY.	
304	TRANSPOSE LEADS TO ALT. SLIP RING BRUSH BOXES.	
140	INSPECT ALL MAIN ALTERNATOR SEALS. REPAIR ANY DEFECTS	
112	MAKE VISUAL INSP. OF ELECT. SWITCH GEAR AND CONTROL EQUIPMENT. INSURE ALL ELECT. CABINET DOORS & COVERS ARE LABELED 'DANGER HIGH VOLTAGE'.	
114	REMOVE ALL BATTERY CONNECTION CABLES. CLEAN & REPLACE THE CONNECTION LUGS OF THE CABLES & BATTERY.	
127	CHECK BATTERY WATER LEVEL, ADD WATER TO BOTTOM OF FILLER NECK.	
302	WASH BATT. WITH SODA-INSPECT & CORRECT BLOCKING.	
409	CHECK TRANSITION USING TRANSITION CHECKER.	
216	INSPECT DYNAMIC BRAKE GRIDS. CLEAN AIR INTAKE LOUVERS & GRID INSULATORS.	
160	CHECK OPERATION & CLEAN LENS OF AMBER WARNING LIGHT. REPLACE LENS IF NECESSARY.	
196	CHECK ALL ELECTRICAL LAMPS, REPLACE AS REQUIRED.	
455	CHECK CALIBRATION OF LOAD INDICATING METER.	

ITEM #	TRUCK LUBRICATION. (GE)	SIGNATURE
109	SERVICE TRACTION MOTOR SUPPORT BEARINGS. ENSURE FULL COMPLIANCE OF DETAIL INSTRUCTIONS FOR THIS MAINTENANCE ITEM.	
110	SERVICE JOURNAL BOXES-FILL TO PROPER LEVEL. (IF EQUIPPED)	
111	SERVICE TRACTION MOTOR GEAR CASES, ADD A MINIMUM OF FOUR (4) ONE POUND BAGS.	
154	CHECK GEARCASE SECUREMENT.	
408	LUBE TRUCK CENTER CASTING BEARINGS.	
155	REMOVE DRAFT GEAR PINS. INSPECT PINS & BUSHINGS.	

ITEM #	CLEANING. (GE 'A' UNIT)	SIGNATURE
460	CLEAN UNDER CAB FLOOR.	
130	CLEAN/WASH:) ENGINE ROOM. ---------) ENGINE. ---------) EXTERIOR. ---------) CAB INTERIOR. ---------) SHORT HOOD. ---------) AIR COMPRESSOR ROOM. ---------) FAN ROOM. ---------) GENERATOR PIT. ---------	
998	========== . ========== . ==========	

.
==========
.
==========
.
==========
.
==========
.
DATE _____. SHIFT ____. SUPERVISOR'S SIGNATURE.....

ITEM #	OUTBOUND CHECK & MAINT. (RECORD DEFECTS)	SIGNATURE
998	== == == SAFETY LETS YOU ENJOY LIFE == == ==	
411	BLOW OUT LOWER CONTROL COMPARTMENTS & RECTIFIER PANELS WITH COMPRESSED AIR.	
185	CHECK ALL FLUID LEVELS.	
	> AIR COMPRESSOR. _____	
	> ENGINE. _____	
	> COOLING WATER. _____	
	> GOVERNOR _____	
	> AUX GENERATOR DRIVE. _____	
126	RECORD ENGINE COOLING WATER TEMPERATURE.	
	> BEFORE LOADING. (_____) _____	
	> AFTER LOADING. (_____) _____	
100	REMOVE CYLINDER COVERS INSPECT ENGINE OVERHEAD.	
101	PULL RACKS FOR CYL(S)-LISTEN FOR UNUSUAL NOISES.	
182	RECORD HORSEPOWER READING. (_____)	
462	TAKE CRANKCASE MANOMETER READING. THROTTLE #8 FULL LOAD. (_____)	
184	RECORD LOAD REGULATOR POSITION. (_____)	
192	CHECK & RECORD PRESSURE READINGS/SETTINGS.	
	> OIL PRESSURE. IDLE.____ #8 POS.____	
	> RACK SETTING-20M IDLE.____ #8 POS.____	
	> FUEL PRESSURE. IDLE.____ #8 POS.____	
	> TURBO PRESSURE. IDLE.____ #8 POS.____	
	> POWER PISTON GAP. IDLE.____ #8 POS.____	
180	CHECK INTAKE AIR MANIFOLD & TURBOCHARGER DISCHARGE ELBOWS FOR LEAKS. THROTTLE #8 FULL LOAD.	
117	CHECK COOLING SYSTEM FOR LEAKS.	
186	CHECK EXHAUST SYSTEM FOR LEAKS.	
146	INSPECT FUEL SYSTEM, HOSES & PIPING.	
189	CHECK FOR OIL LEAKS.	
188	CHECK FOR CLEAR STACK.	
300	CHECK AUXILIARY GENERATOR VOLTAGE AT IDLE AND #8 THROTTLE WITH SYSTEM WARM & STABLE. (_____)	
250	PERFORM OPERATIONAL PACESETTER TEST (IF EQUIPPED)	
001	TEST AIR BRAKE EQUIPMENT PER RULE 212.	
002	TEST SAFETY CONTROL DEVICE(S) OPERATION & SEALED PROPERLY.	
	> SPEED RECORDER O/S SYSTEM. _____	
	> ALL ALERTER RESET FUNCTIONS. _____	
003	TEST SANDERS	
004	CHECK FOR CORRECT AIR PRESSURE SETTINGS	

UNIT #: BN 5040


```
            > MAIN RES.(130 TO 140 PSI)
            > CONTROL AIR. (70 PSI)
            > BRAKE PIPE. (90 PSI)
            > EQUALIZING RES. (90 PSI)
            > COMPRESSOR CONTROL SWITCH.
005     CHECK AIR DATES ON FORM 15201 & CONDITION
            OF HOLDER.
007     CHECK AUTOMATIC DRAIN VALVES FOR PROPER OPERATION
008     DRAIN MOISTURE FROM BOTH MAIN RES./FILTERS/
            DIRT COLLECTERS/INTERCOOLERS.
044     CALIBRATE AFM FOR 60 CU. FT. PER MIN.(IF EQUIPPED)
047     INSP/TEST QUICK RELEASE VALVE ON HAND BRAKE
            SYSTEM. (IF EQUIPPED)
104     ASSURE LOCOMOTIVE LOADS FORWARD & BACK.
998     ==========================================
        .
        DATE _________. SHIFT ____. SUPERVISOR'S SIGNATURE.....
-----------------------------------------------------------------
ITEM #  MAINTENANCE SIGN OFF                                SIGNATURE
-----------------------------------------------------------------
999     I CERTIFY THAT THIS LOCOMOTIVE HAS UNDERGONE A
        THOROUGH 92 DAY PREVENTIVE MAINTENANCE PROGRAM
        AND WILL PERFORM RELIABLY FOR THE NEXT 92 DAYS.
                SHOP SUPERINTENDENT'S SIGNATURE.....
-----------------------------------------------------------------

#
#####################    END OF MAINTENANCE ACTIVITY(S)    ####################
```

Appendix B

GUIDELINES FOR ADJUSTING TERMS OF REFERENCE FOR TECHNICAL ASSISTANCE UNDER THE RRSS

INTRODUCTION

The evaluation team has made a number of recommendations that, if accepted, would make it necessary to adjust the terms of reference for technical assistance under the Mozambique component of the RRSS project. Specifically, the team has recommended that operations be halted in the CFM(S) locomotive workshop and that all locomotive maintenance activities, which are economic for CFM(S) to undertake, be shifted to the diesel shed. The team has also recommended that an accounts and financial support office be developed only at the CFM corporate level, and not also at the CFM(S) level, and that the training program for the office be redesigned. Finally, the team is convinced that it would be desirable for Enge-Rio to provide the locomotive maintenance training, and that there be more clearly defined responsibilities and lines of authority for LBI and Enge-Rio personnel in connection with development of the accounts and financial support functions. The changes that might desirably be made in the terms of reference for both Enge-Rio and LBI will result in net reductions of person-months (p/m) of technical assistance. The LBI p/m reduction might be employed to conduct the studies recommended by the team. Suggestions for the adjustment of the terms of reference for both teams are given in the following sections.

ENGE-RIO TECHNICAL ASSISTANCE

Adjustments to the Terms of Reference for Locomotive Maintenance Requirements

Contract with Enge-Rio to deliver a successful locomotive maintenance program. A reduction in the present Enge-Rio team from eleven to eight members (for the balance of the 2½-year contract) would be appropriate. Further, contract with Enge-Rio to provide all locomotive maintenance related training, and English language training. The training effort would require about 60 person-months to accomplish.

Detail of Enge-Rio Terms of Reference Adjustments

1. The Enge-Rio team should have complete responsibility and authority for the maintenance and repair of CFM-S locomotives. Enge-Rio presently has an eleven member team split between the Maputo Workshop and the Diesel Shed. The team has a 2½-year contract to install a locomotive maintenance program that will increase the availability rate of the CFM-S locomotive fleet to 75%, and to rehabilitate eight GE U20-C locomotives. If the recommendation to close the Workshop, and to move all locomotive maintenance to the Diesel Shed is adopted, the Enge-Rio team should focus its efforts on developing a locomotive maintenance program that is workable in that environment.

   In addition, all effort directed at locomotive rehabilitation and Workshop improvement should be discontinued, and Workshop operations halted. The revised Enge-Rio contract

should include a quality control/performance clause to ensure achievement of the following objectives.

a. Locomotive availability of 75%
b. Locomotive performance of 30 days between failures
c. Locomotive out-of-service ratio of no more than 25%
d. Locomotive detention time of no more than:
   8 hours for a 3 month maintenance activity
   12 hours for a 6 month maintenance activity
   24 hours for a one year maintenance activity
e. Reduction in the cost of locomotive maintenance

The above stated objectives represent acceptable performance levels for successful railroad operation. The locomotive maintenance program must be designed to reduce locomotive failures through preventative maintenance activities performed at the lowest possible cost.

2. Cease all activities in the Workshop and move all "running maintenance" to the Diesel Shed. (The Diesel Shed should be fully operational before closing the Workshop.)
3. Improvements in the Diesel Shed will be needed to accommodate the locomotive maintenance and repair activities. Items to address include:

   a. The track condition inside and outside
   b. Interior lighting
   c. General clean-up effort
   d. Crane replacement/upgrade
   e. Office and administrative conditions
   f. Small hand tools
   g. Small "store house"

   (Perhaps some of the funds designated for the Workshop could be diverted to this project. Manpower requirements are unknown at this time.)
4. Design and deliver a comprehensive training package that will achieve the desired objectives. The responsibility for this objective should be turned over to Enge-Rio. Presently, LBI is charged with developing and delivering training to the employees engaged in locomotive maintenance and repair activities. The LBI contract calls for training 192 employees utilizing 75 person months of training expertise.

   The LBI training plan has identified about 100 locomotive maintenance employees as "trainable." Training of these 100 employees should require about 48 person months (two trainers, for two years) to address the skills required in the Diesel Shed, and about 12 person months (one trainer for one year) to meet the English language requirement. (This individual may be available locally.)

   The objectives of the training effort should be as follows.

   a. Train Mozambicans to perform locomotive maintenance and repairs that will maintain the performance levels stated in section one.
   b. Train the Mozambican staff to train themselves.
   c. Train Mozambicans to manage the operation of the Diesel Shed.
   d. Begin English language classes.

   (A railroad training school should be selected to provide the locomotive specific training.)

MAPUTO DIESEL SHED

Locomotive Maintenance and Management Training Methodology

1. Identify training needs
2. Identify necessary skills
3. Identify Mozambican trainers
4. Develop training material (include Mozambicans) and training schedule
5. Deliver training (with Mozambican assistance)
6. Monitor results

Training Courses for the Maputo Diesel Shed

1. English language course (100 employees, 12 person-months of instruction)
   a. begin immediately
   b. one year training period
2. Locomotive maintenance classes (100 employees, 320 hours of training per employee)
   a. 8 classes quarterly, for 2 years
   b. 12-13 students per 40 hour class
3. Locomotive Maintenance Management Classes (160 hours of training)
   a. 2 management classes each year, for 2 years (8 students per 40 hour class)
   b. attend all Locomotive Maintenance Classes (320 hours of training)
   c. total of 480 hours of training for management employees

   (Locomotive maintenance and management classes require 48 person-months of instruction.)

Adjustments to the Terms of Reference for the Accounting and Financial Support Functions

Without the development of a streamlined accounting and finance organization, with automated and integrated support systems, the improvement of accounting data within CFM(S) has extremely limited value. In this regard, the Enge-Rio resources (five positions) committed to line functions within the existing framework of CFM(S) could be better utilized participating in and supporting (LBI has primary responsibility) the reorganization/centralization of CFM's accounting and financial support functions. In general, the recommended changes to the Technical Assistance team result in a pool of technical assistance resources and a blurring of distinct responsibilities such that the TA "team" (LBI and Enge-Rio) is capable of shifting resources where they are best employed.

The following paragraphs identify specific shifts in Enge-Rio's responsibilities as well as estimates of the associated manpower requirements. (See Chapter 7)

1. Implementation of Pre-Packaged Accounting System
   - Primary responsibility is LBI and the Enge-Rio team leader supported by Enge-Rio general accountants and financial analyst.
   - This phase of the project includes the design of procedures to input existing and future accounting information into a PC and the supervision of timely report (an automated function of the packaged system) generation.
   - Manpower requirements: 3-7 man-months over a two month time period.

2. Restructure of Existing Accounting Organization.
   a. Documentation of Existing Procedures and Information Flows.
      - Primary responsibility is LBI and the Enge-Rio team leader supported by the balance of the Enge-Rio staff. This should be done concurrent with phase 1.
      - Manpower requirements: 2-4 man-months over a one to two month time period.
   b. Design and Implement a reorganized/centralized CFM Accounting/Finance Organization.
3. Automation/Design and Implementation of System Support for Restructured Accounting Organization.
   - Primary responsibility is LBI with all Enge-Rio positions available in a support role.
   - Manpower requirements: 2-4 man-months over a two-three month time period.
4. Development of an Internal Audit Function
   - Primary responsibility LBI and Enge-Rio team leader and auditor.
   - Manpower Requirements: 3-4 man-months over a five month time period.

Recap of Manpower Resources and Uses (in Man-Months) First 5 months:

Available	25 (5 months x 5 positions)
Uses:	
1. "Off-the-Shelf" System	3-7
2. Reorganization	
a. Documentation	2-4
b. Restructure	2-4
3. Automation	2-4
4. Internal Audit	3-4
Total	12-23
Balance	13-2

The resources required would tend toward the lower figure as there are overlaps between various phases of the timetable. For example, the identification of information sources, required to obtain accounting data for input into the 'Throw-Away' accounting system (phase I), is also required in phase 2a (system documentation).

The balance of the Enge-Rio resources should be used to improve (both in terms of accuracy and timeliness) the data quality of CFM(S).

LBI TECHNICAL ASSISTANCE

Adjustments to the Terms of Reference for Locomotive Maintenance and Manpower Training Requirements

Release LBI from all obligations regarding locomotive maintenance, the training of locomotive specific skills, and English language skills. This would remove the 75 person months of training, and the 108 person month (3 persons for 36 months of locomotive technical assistance) components from the LBI contract.

Adjustments to the Terms of Reference for the Accounting and Financial Support Functions

The modifications recommended in Chapters 7 and 8 can be summarized:

1. Develop a direct reporting link between LBI and the Enge-Rio team leader. Assignments of Enge-Rio team members to work under the direct supervision of other LBI specialists should be done on a project basis.
2. Require verifiable intermediate goals. An example might be the installation of a 'Throw-Away' accounting system within two months.
3. Shift in individual priorities/job responsibilities.
4. Postpone all formal training efforts until such a time that the gap between the restructured organizational needs and capabilities have been identified.

With the exception of the training specialist, the changes in the accounting/finance areas will not substantially alter the technical assistance commitment (in terms of length of stay (man-months)) required. The result of the need to establish a restructured organization prior to the initiation of significant training efforts should be a reduction of the training program by 3-6 man-months (measured from the draft report date).

Appendix C

COMMENTS OF USAID/MOZAMBIQUE

1. USAID/Mozambique — Mid-Term Evaluation
Commodity Management Element
October 4, 1991

2. The Regional Rail Systems Support project, Mozambique component, is designed to improve the carrying capacity and operational efficiency of Mozambique Railways (CFM). Lack of spare parts makes maintenance difficult, resulting in the poor locomotive and wagon availability and consumption of capital stock. Inadequate shop facilities and low availability rates of equipment due to inadequate maintenance programs have resulted in diversion to more costly rail routes, resulting in substantial extra costs to the landlocked countries serviced by CFM. The project is addressing these constraints by providing the timely delivery of locomotives, diesel and steam locomotive spare parts, workshop tools and equipment, managerial and foreman-level technical assistance.

3. This element of the midterm evaluation is being undertaken to examine implementation matters, such as procurement procedures and timeliness of delivery of project commodities, assess the following specific objective indicators: status of equipment orders for workshops; status of locomotive spare parts orders; and status of locomotive orders, and review progress made in improving the host country's procurement procedures. The evaluation also addresses the host country contracting for construction and technical assistance.

   The evaluation is based on review of project files, interviews with project implementers and counterparts, and site visits to CFM.

4. Findings and Conclusions

Review of Procedures
A review of procurement documents indicates that: (1) The procurement plan in the Project Paper as updated by PP amendments was exemplary, except for some cases of overoptimistic scheduling. The plan includes a determination of the host country entity (CFM) capacity to carry out project procurements. Later in the project, a Mission Memorandum explicitly made such a determination based on a more detailed assessment, for construction contracting. (2) Proper procedures were used for each procurement. (3) The only procedure weakness is in CFM's arrival accounting.

Timeliness of Delivery of Project Commodities, Status of Orders for Locomotives, Spare Parts, Tools, and Equipment
Timeliness of deliveries is measured here by comparing actual delivery to planned delivery. The procurement schedule, as updated by Project Agreement Amendments 1 and 2, and actual performance are compared in Attachment I. The comparison shows that the actual locomotive procurement actions meet or beat the planned schedule. Delivery of the locomotives under the contract is scheduled to be completed four months before the planned schedule. Likewise, contracting actions for tools and equipment took place ahead of schedule, while delivery under

those contracts was only slightly behind schedule. The contracting actions for the first order of diesel spare parts for both CFM South [CFM(S)] and CFM Central [CFM(C)] were on schedule. Delivery of the parts was 9-11 months after planned. Contracting for the steam locomotive spare parts began seven months after planned, but the contracting was completed only four months after scheduled. The "timeliness" of the contracting actions for these procurements (locomotives, first diesel parts, tools, and equipment) in terms of comparing actual with planned is commendable. The "timeliness" of the deliveries under these same procurements is good for the locomotives, tools and equipment, but is bad for the majority of diesel and steam spare parts. This latter poor showing is caused by overoptimistic delivery schedules, plus slow contractor performance.

The second procurement of diesel spare parts for both CFM(S) and CFM(C) were scheduled to commence in February 1990, with arrival scheduled in April 1991. These procurements have not yet been initiated. Thus, the difference between actual and planned will be close to two years. Given the experience with slow deliveries of spare parts, and the probability that award(s) will not be made until May/June 1992, delivery will be around June 1993. The impact of this, as well as a re-evaluation of when the third spare parts orders should be initiated should be undertaken.

Ability to meet the planned procurement schedule for the technical assistance and construction contracting actions was mixed. The contracting actions for both the managerial technical assistance, done through A.I.D. direct contracting, and the foreman-level technical assistance, done through host country contracting, were initiated according to schedule and completed three to four months behind schedule. The A&E contracting for the construction of the Maputo workshop and for the housing for technical advisers was initiated and completed pretty much on schedule. The A&E contracting for the Beira workshop was begun near the scheduled date but not completed until 14 months after planned.

Review Progress Made in Improving the Host Country's Procurement Procedures

As noted above, the procedures used for all contracting, including the host country contracting actions, were properly justified and carried out correctly. One of the reasons the host country contracting was handled correctly is that most actions were accomplished by contractors hired under the project and all actions were monitored and approved by the USAID project officer. The host country entity responsible for the host country contracting, CFM, does understand the A.I.D. procurement requirements and procedures, but has had consultants to rely on to carry out the different steps of a procurement. Some transfer of procurement knowledge and practices is taking place, but because of the almost nonexistence of mid-level managers in the CFM, there is not great hope that responsible managers within CFM will be able to undertake their own import procurements unless changes are made within CFM management.

A recent audit points out that the Mission learned that project-financed goods were often experiencing extensive delays at the ports and were not being cleared in a timely manner. Apparently, CFM does not have a system to monitor the arrival of goods and to ensure the prompt clearance of project goods from the port.

Recommendations

Procurement planning should include more realistic time needs for identifying spare parts requirements (which includes knowledge of inventories and usage histories), and for the delivery of diesel locomotive spare parts. In this regard, the second and third orders of diesel spare parts should be re-examined to determine needs and reschedule contracting actions and delivery. Efforts must be undertaken to strengthen CFM's management so that procurement skills are developed within CFM. CFM's procurement systems and inventory systems should be linked by an arrival accounting system.