PD-AAH-201

8662

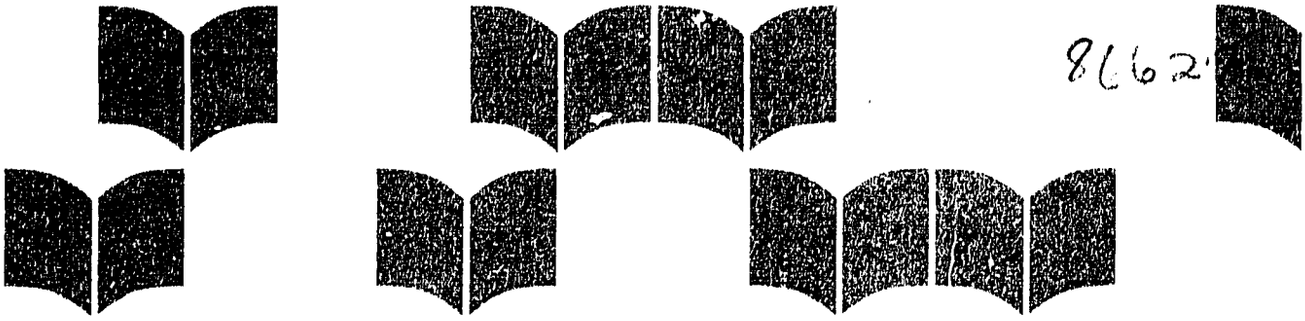

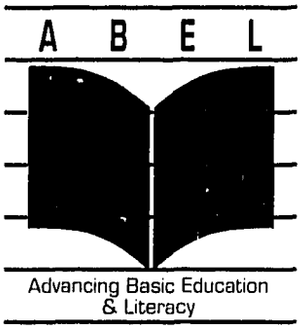

EQUITY IMPROVEMENT PROGRAM (EIP) PROPOSED PILOT ACTIVITIES

Prepared by:
May Rihani

July 1991

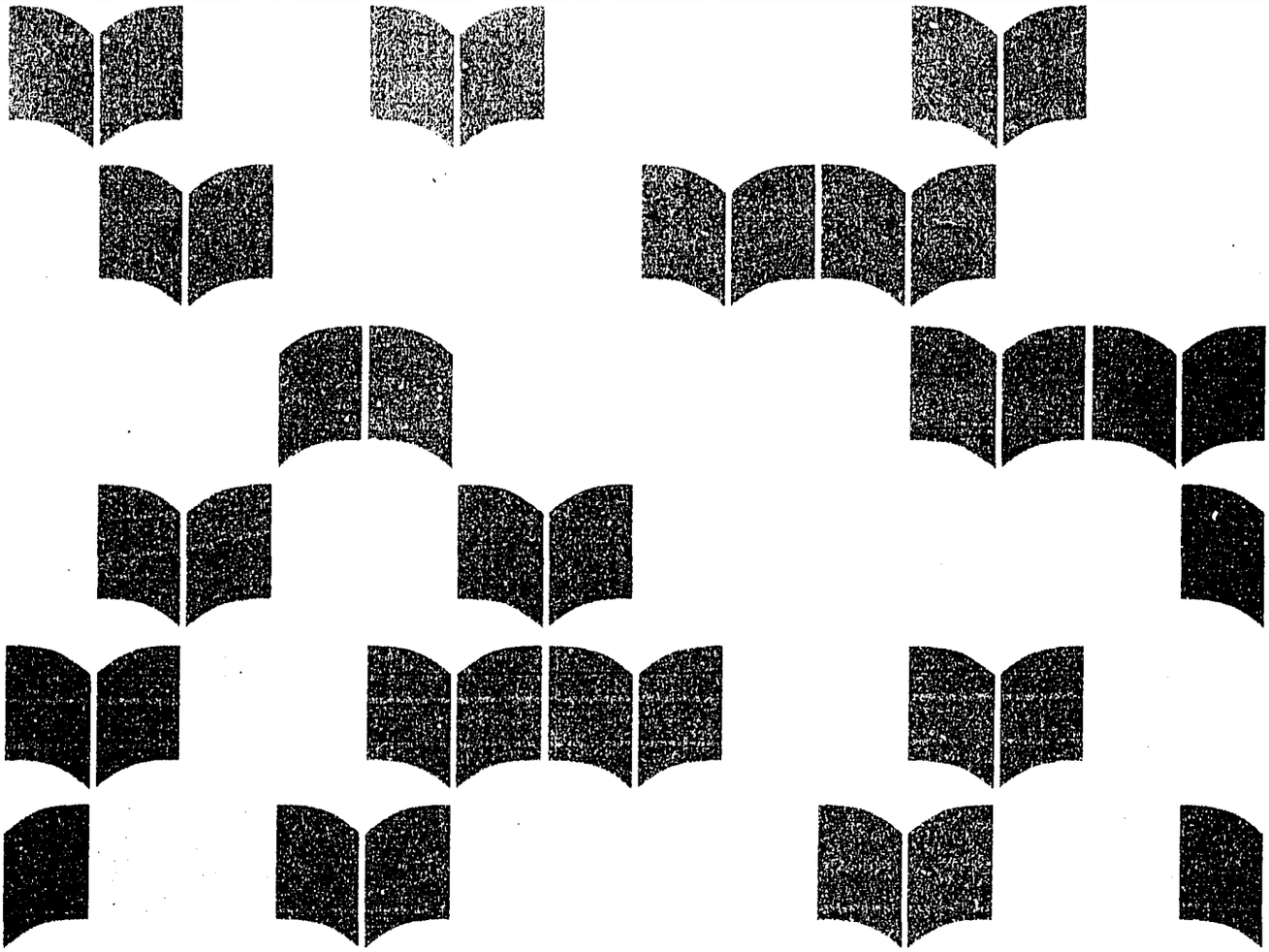

Bureau for Research and Development • Office of Education • Office of Women in Development
• United States Agency for International Development •

PRIMARY EDUCATION PROGRAM

(PREP)

EQUITY IMPROVEMENT PROGRAM
PROPOSED PILOT ACTIVITIES

Submitted to

UNITED STATES AGENCY FOR INTERNATIONAL DEVELOPMENT
USAID/ACCRA

and the

MINISTRY OF EDUCATION, ACCRA

by

MAY RIHANI

ADVANCING BASIC EDUCATION AND LITERACY (ABEL)
A Centrally Funded USAID Project
Prime Contractor: Academy for Educational Development (A.E.D.)
Subcontractor: Creative Associates; Washington, D.C.

July, 1991

TABLE OF CONTENTS

PAGE

I. Introduction.....1

A. Background.....1
B. The Ghana Primary Education Program: PREP.....1
C. Equity.....2
D. Conditions Precedent.....3
E. Purpose of this Consultancy.....5

II. Equity Improvement Program: (EIP).....6

A. Objectives.....6
B. Why Equity.....6
C. Causalities of Inequities.....8
D. Results of Inequities.....13
E. EIP: Pilot Activities.....13

III. Proposed Pilot Projects.....14

A. Introduction.....14
B. Assumptions.....14
C. Proposed Pilot Projects.....15
1. Scholarships.....16
2. Library.....17
3. Community Involvement 19
4. Furniture for Pupils.....21
5. Housing for Head Teachers/Teachers.....23
6. Textbooks for Participating Schools.....27
7. Remote Area Incentive Package.....28
8. Increased Retention Competition.....30

IV. Proposed Selection Criteria.....37

A. Criteria for Selection of Districts.....37
B. Criteria for Site Selection.....37
C. Documentation.....39
D. Districts with Severe Imbalances as they Relate to Equity.....40

V. Implementation Plan.....45

A. Proposed Implementation Plan.....45
B. Management Approach.....46
C. Implementation Schedule.....49

PAGE

VI. Monitoring and Evaluation.....53

A. General Equity Objectives to be Measured Over the Life of Project.....53
B. First Phase Objectives to be Measured.....54
C. Methodology.....54
D. Monitoring and Evaluation Schedule for the Pilot Phase of EIP.....55

VII. Budget.....57

VIII. Annexes.....67

A. Bibliography.....67
B. List of Individuals Interviewed.....68
C. Designs for Proposed Pilots.....71

I. INTRODUCTION

A. BACKGROUND

In the early to mid 70s, Ghana had one of the most highly developed systems of education in West Africa. When the economic decline took place in the mid 70s, Ghana's educational system started deteriorating. By the 80s, the education system had reached its lowest point. Enrollment fell, trained teachers exited the system and the country, and funding for education was inadequate.

By mid 80s, the Government of Ghana (GOG) recognized the need to refocus on education and to plan and implement educational reforms. The GOG started by increasing the budget allocations for education to 28%, and by decreasing the number of pre-university school years from 17 to 12. Many impressive gains have been made as a result of the educational reform: national enrollment increased, JSS enrollment grew faster in deprived areas than in affluent areas. Donors were fully supportive of the reform initiative, the World Bank's two Education Sector Adjustment Credit programs (EDSAC I and II) have played major roles in the Ghanaian Educational Reform.

However, a major problem with the EDSAC focus was that it targeted Junior and Senior Secondary Schools, not Primary Schools. The system that was progressing rapidly had a weak foundation. This foundation needed strengthening. PREP was designed to respond to the specificity of that need.

B. PREP

To assist in the educational reforms, USAID committed itself to support the primary education system through the Primary Education Program (PREP).

PREP is a five year $35 million initiative designed to significantly strengthen the policy and institutional framework required to establish a quality, accessible, equitable and financially sustainable Ghanaian primary education system by the year 2000. The goal of PREP is fully compatible with MOE sectoral objectives. The four key characteristics of the Ghanaian primary education system targeted by PREP are as follows:

1. Quality: Measured by student achievement scores,

2. Accessibility: Measured by national enrollment rates,

3. Equity: Measured by the enrollment and retention rates of currently underrepresented groups of children,

4. Financial Sustainability: Measured by the MOE's ability to fund a sound primary education system from its own financial resources. This will be demonstrated by the GOG's ability to sustain the progress initiated by PREP when funding ceases in 1994.

C. Equity

There is significant variation in primary education access and retention rates in Ghana. Enrollment rates differ substantially among geographical areas and among levels of income. Significant disparities also exist between schools within a given district.

In general, geographic inequities are greater than those of gender, but persistent disparities between the sexes do exist. Lower enrollment and retention rates for girls are the most consistent pattern, especially in northern Ghana.

PREP's strategy to improve equity imbalances is two-pronged. First, PREP will contribute indirectly to improving system equity by improving education quality and effectiveness throughout Ghana. Second, it directly addresses equity imbalances by requiring the GOG to implement an Equity Improvement Program (EIP) and equity improvement policy. The proposed EIP pilot activities will precede full implementation of EIP.

The EIP will increase the access of eligible primary school age children, especially girls, to the primary school system. Objectively verifiable indicators that access has increased as a result of EIP activities are:

1) a 50% increase in gross and female enrollment in areas targeted by the EIP, and

2) a 25% increase in gross and female retention in EIP target areas.

D. Conditions Precedent

The Program Agreement between MOE and USAID (signed on July 17, 1990) stipulated in the conditions precedent to the Second Disbursement the need for "Evidence that the Grantee, through the Ministry of Education, has started a pilot program, as approved by A.I.D., to improve equity in the Grantee's primary educational system." The second tranche is scheduled to be disbursed by December 27, 1991, and a progress review of the conditions precedent will take place during October-November 1991.

In order to satisfy the conditions precedent to disbursement of the second tranche of PREP funds, as indicated in Section 2.2(d) of the Grant Agreement, MOE will need to provide USAID the following documentation for review:

A) An official MOE Equity Improvement Plan Document which provides evidence that Equity Improvement Program (EIP) pilots have started in at least twenty (20) key Districts with severe equity imbalances.

B) Documentary evidence (in the form of an illustrative budget) that necessary and appropriate levels of resources have been allocated to test at least ten Pilot Equity Improvement activities.

The Equity Improvement Plan must contain the following information:

(1) Names of the targeted Districts where (EIP) Pilot Program activities have already been started. Providing brief description of each activity and date of start for each pilot activity.

(2) A copy of illustrative approved budget as a proof that there is sufficient and appropriate level of funding available to carry out these activities.

(3) A statement describing the criteria used in selecting Districts to participate in the EIP pilot activities.

(4) Documentary proof of existence of EIP Selection Committee to include names, positions and agency representation of all committee members.

It is expected that most of the pilot activities (more than 50%) will be in the areas where most imbalances exist, notably in the Northern, Upper-East and Upper-West Regions.

E. Purpose of this Consultancy

The purpose of this consultancy was to work with USAID and the Ministry of Education on the proposed Equity Improvement Program pilot activities component of PREP in order to meet the conditions precedent for the release of the second tranche.

The scope of work of this consultancy lists five tasks to be completed:

1) Review PREP's PAAD, specifically those portions which address equity as an issue, the EIP, and the conditions precedent related to EIP.

2) Develop appropriate and culturally relevant incentive plan to start EIP Pilot Activities in 20 targeted schools.

3) Develop a proposed criterion to select at least 20 key districts with the most severe imbalances as they relate to equity issues.

4) Develop an evaluation criteria to measure the success of each activity.

5) Develop an operational budget for each pilot activity.

The following sections will address the above five listed activities. An additional section is included to discuss the proposed implementation plan for these activities.

II. EQUITY IMPROVEMENT PROGRAM

A. Objectives of EIP

The Equity Improvement Program (EIP) aims at making educational resources available to all eligible children by allocating resources to inputs that will minimize inequities.

EIP's objective is to remove educational disparities by reaching underserved groups locally, regionally and nationally, as well as the poor, the rural and the remote populations. The Equity Improvement Program will attempt to broaden the base of the educational system by reaching out to the portions of the Ghanaian children population that represent approximately the 30 percent that are still outside the primary education. In addition EIP will attempt to retain the children that are in the primary educational system for at least the completion of their first six years of schooling.

B. Why Equity

A fully equitable educational system exists when all the eligible children have the opportunity to enter the system at the base of the educational pyramid. The broader the base, the more equitable is the system.

In Ghana the base encompasses 69% to 70% of all Ghanaian children. There are 30% to 31% that are still outside the primary system. Among the reasons given for the existence of children (30% to 31%) outside the primary educational system is the fact that educational opportunities are unequally distributed. They are unevenly distributed among economic groups, among social and ethnic groups, among geographic areas, among and within districts, between schools and between the sexes.

The first aim of EIP is to broaden the base of the Ghanaian educational pyramid by integrating the remaining 30% to 31%. This is where equity and access overlap.

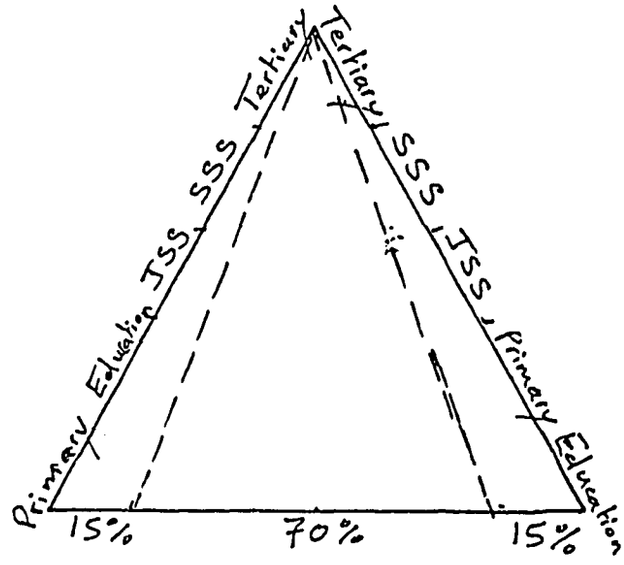

In addition, EIP aims at retaining the largest number possible of children within the primary educational system by improving the <u>quality</u> of the educational services and inputs. This is where equity and quality interventions are likely to result in decreasing the disparities, and where issues connected to equity and quality become fully interrelated.

It is clear, therefore, that the issues of access, quality and equity in education impact fully on each other. In an ideal situation, full access to, and equal quality inputs within, the primary educational system result in all children entering the educational system and all of them having the potential of completing their primary cycle. In Ghana only 70% of all primary school aged children attend primary schools, and substantial differences across regions are evident. For example, in the Northern Province 27.23%, Upper West 33.89% and Upper East 34.91%, of all school-aged attend primary schools, while Greater Accra schools enroll 82.31% of all children aged 6-12 to primary schools.

C. CAUSES OF INEQUITIES

There are three major socio-economic constraints that cause inequities in either accessing the educational system and/or remaining in it.

- Economic Hardships: poverty cannot "afford" education. A certain segment of the population find the direct costs and the opportunity costs prohibiting.

- Geographic Remoteness: Remote areas are often the regions where public services and supplies are not fully widespread, where transportation and communication are rarely facilitated and where the poorest of the poor live.

- Gender Differentiation: Girls tend to enroll in school less, and drop-out from school earlier, than boys.

(1) ECONOMIC HARDSHIPS: The most pervasive constraint to primary education is the economic condition of the rural poor. The average Gross National Product (GNP) in Ghana is $390 per year, and lower in the rural areas. Poverty, coupled with 2.9% birth rate, becomes a major reason why parents keep children (particularly girls) out of school to help with household work or with income generating activities. In some extreme cases, specifically in certain rural areas, parents cannot afford the direct costs of schooling and/or the minimal fees required for textbooks. These direct costs are approximately 60 cents (200 cedis) per child per year. However, when the indirect costs are added, the total annual cost of education per child is estimated to be 10,000 cedis, or about $27.00. This would include the cost of uniform, desk and chair, materials such as notebooks and pens. In other cases, parents cannot afford the opportunity costs of losing the free labor of their children.

The Ghana Living Standards Survey (GLSS) states that school attendance varies substantially with expenditure status. The absolute percentages show fewer than half of the children of the poorest 10% of the population are in school.

Another aspect of this correlation between the economic condition of the parents and the schooling of their children is the perceived value of education. Parents need to believe that schooling will produce a return to the child and to the family. If the parents do not perceive the positive value of schooling or the societal benefits it provides, they will not be convinced of the need to pay the direct and the opportunity costs of the child's education. If the perceived value of attendance is less than the personal costs of attendance, access will be low and drop-out rates will be high.

(2) GEOGRAPHIC REMOTENESS: Geographic remoteness is a serious constraint to primary education. Public services such as schools, primary health care clinics, asphalted roads, electricity and running water are often not supplied to the remote areas. Transportation and communication facilities rarely exist. Inaccessibility of remote areas render these regions isolated, consequently many of the bright, young, trained teachers do not choose to be based in these remote areas. Commodities, equipment and health and educational supplies in support of public services often do not reach the remote areas and if they do, they arrive late and in scare quantity. This remoteness impacts primary education in the following ways:

- The majority of those who live in remote areas tend to be the poorest of the poor;

- Many children in remote regions have no means of transportation of their own. These have to walk 3 to 4 miles daily to go to schools;

- Educational inputs (i.e., trained teachers, learning materials) reach less the remote areas and result in the unevenness of the distribution of these basic inputs;

- Community leadership is often illiterate and does not provide a supportive atmosphere for education;

- Populations living in remote regions tend not to recognize the long-term socio-economic benefits of basic education; and

- Remoteness isolates communities from new ideas, from technology, from mainstream directions, and weakens any desire for change.

(3) GENDER INEQUITIES: Traditional, ethnic and economic values in some regions, such as the North, the Upper West and the Upper East, do not place a high value on education in general, and place an even lower value on the education of girls. Direct costs of basic education and opportunity costs tend to discourage the parents from sending all of their children to school, as a result girls tend to enroll in school less and drop-out from school earlier than boys. The 1989/1990 statistics of the Ministry of Education ranked the 110 districts according to the percentage of girls enrolled in primary schools. The following are the statistics for the 10 districts that represent the lowest percentages of enrollment for girls in all of Ghana; those percentages vary between 16.45% and 33.26%, while the average enrollment percentage for all boys and girls in Ghana is 70%.

LOWEST PERCENTAGE OF GIRLS' ENROLLMENT BY DISTRICTS

1989/1990

DISTRICTS	REGION	TOTAL ENROLLMENT	ENROLLMENT OF GIRLS	% OF GIRLS
Gushiega-Karaga	Northern	2359	388	16.45
Tolon-Kumbungu	Northern	4907	1085	22.11
Savelugu-Nanton	Northern	4440	1116	25.14
Yendi	Northern	8089	2268	28.04
Gambaga	Northern	11005	3175	28.85
Bawku East	Upper East	16436	5191	31.58
Bongo	Upper East	4279	1374	32.11
Zabzugu-Tatale	Northern	2551	832	32.61
Bimbila	Northern	8347	2733	32.74
Bawku West	Upper East	3136	1043	33.26

In certain regions, female retention rate (primary 6 as percent of primary 1) varies any where from 30.4% (Upper West), to 29.4% (Upper East), to 53.7% (Northern).

Within these regions there is even a greater variation. For instance, in the North the female retention rate for 1989 was as low as 9.0 percent in Zabzugu-Tatale district, and 9.0 percent in Tolon-Kumbungu district.

These three major causes of educational inequities (economic hardships, geographical remoteness and gender differentiation) are interconnected and tend to reinforce each other when they exist simultaneously.

(4) OTHER CAUSALITIES: Other constraints, such as the diversity of maternal languages, tend to compound the disparities in educational opportunities. There is a correlation between belonging to the minority languages and percentages of access to, retention in, and completion of, primary school. Another constraint linked to linguistic pluralism is the fact that this diversity of languages makes it difficult to redeploy trained teachers to the different regions.

Unequal distribution of the educational inputs is an additional factor that contributes to the disparities among and within the regions and the districts. Finally, there are other causes that contribute to the inequity dimension of primary education and that are beyond the scope of PREP. These include providing basic infrastructure such as building schools, constructing and asphalting roads, and ensuring accessibility of electricity and water to all parts of the ten regions.

D. IMPACT OF INEQUITIES ON THE EDUCATIONAL SYSTEM

The above mentioned causes of inequity result in certain educational realities and impact on the access to, and quality of, the educational system by creating imbalances and disparities, including:

- lower percentages of enrollment,
- higher percentages of drop-out,
- lower percentages of retention,
- lower percentages of completion,
- poor quality of achievement,
- lower percentage of trained teachers, and
- high absenteeism of teachers and head teachers.

To remedy the disparities, the Ministry of Education and USAID agreed on implementing the Equity Improvement Program as a part of the educational reform policy for Ghanaian primary schools.

E. EQUITY IMPROVEMENT PROGRAM: PILOT ACTIVITIES

The Equity Improvement Program will take into consideration the major causes of inequities, will focus on the educational disparities, and will attempt to reduce those imbalances by minimizing and/or altering the specific causes of the inequities.

EIP's first phase will consist of designing, implementing and testing a small number of pilot projects. Testing these pilot projects is a crucial element in the process of understanding better the correlation between educational inputs and inequities. Based on the results of the testing, and specifically on the monitoring of the implementation and the evaluation of the results of the testing, decisions will be made regarding the cost-effectiveness of those pilots and the possibility of replication and expansion of these pilots in other schools, districts and regions. The main purpose of these pilot activities is to find out what type of incentives work, and what doesn't work, within the Ghanaian context.

III. PROPOSED PILOT PROJECTS

A. INTRODUCTION

The proposed pilot activities are based on the forgoing analysis of equity issues in primary education. They are influenced by several major inputs:

1) Working sessions with the leadership of the Ministry of Education,

2) Data collection from the Planning, Budgeting, Monitoring and Evaluation Division of the Ministry of Education,

3) Additional information and statistics collected from regional, district and school level sources in three regions (Ashanta, Brong-Ahafo, and Northern) during site visits to approximately ten schools,

4) Discussions with the participants at the Workshop that accompanied the PREP Launching,.and

5) Several working sessions with USAID PREP officers.

B. Assumptions

The assumptions made while designing the eight proposed pilots are the following:

1) MOE and USAID agreed to design and implement an Equity Improvement Program that has two objectives:

   a. To provide resources to those Ghanaians now most underrepresented in the primary education system; and

b. To serve as an instrument for the formulation of an equity improvement policy by testing the pilot projects in specific targets areas.

2) MOE and USAID agreed to launch the first phase of the pilot projects at the beginning of the scholastic year 1991/1992, and that during the final quarter of 1991 a tranche review examining the conditions precedent will take place.

3) MOE and USAID agreed that prior to disbursement of U.S. 7 million dollars of the tranche two program funds, there would be evidence that an A.I.D. approved pilot program for system equity would have been initiated by the MOE.

These assumptions led to the design of small, simple pilot activities that are manageable, that do not require lengthy preparation time, that can be launched in the very near future, and that do not require more than one year to begin to show some results, but would require three years to show substantial changes in educational outputs.

C. Proposed Pilot Projects

This section of the report is a description of each proposed pilot activity, the equity constraints that each pilot is attempting to overcome, the rationale for each pilot, the interventions each pilot is proposing to implement, and the expected outcomes.

1. Scholarships

Objectives: (A) To encourage a greater number of girls to attend primary school, and (B) to improve the retention and the completion rate of girls within primary school. This will be facilitated by providing financial awards to female pupils (up to C8,000 per female student per year).

Constraints to Overcome and Rationale for Proposed Pilot: Parents, specifically poor rural parents, do not always perceive the value and the benefits of educating their daughters. Often the direct as well as the opportunity cost of girls' education is perceived to be higher than the individual and social returns of the girls' education.

Poor rural parents are more likely to use the labor of their children productively; daughters more than sons can contribute to household work, to household production, to fetching the water and the wood, to farm production, to selling produce in the market, and therefore are typically seen as more expensive to send to school than boys. If poor rural parents have to make a choice about who not to send to school in order to have free labor assisting them, the probability of choosing the daughters is much higher than choosing the sons, hence the lower percentage of enrolled girls in primary schools, and more importantly, the much lower percentage of girls retained till primary six.

These constraints regarding girls' education created a gender gap in the educational system. To narrow this gap between the two genders, and to break the cycle of the numbers of girls lagging behind the number of boys in primary education, this pilot proposes to target the girls of rural poor communities and to give these girls scholarships, thereby alleviating the parents' financial burden of paying for the schooling of their daughters.

Intervention: PREP proposes to examine the effect of lowering the direct cost of girls' schooling. The presumption is that an increase in girls access and retention in school will result.

This pilot proposes to pay all the direct educational costs for girls in 16 primary schools located in rural economically disadvantaged areas and in districts where data indicates a serious gender gap at the primary level. The direct costs include the costs of desk and chair (approximately C5,000), the cost of uniforms (between C2,000 and C2,500) books, tuition, notebooks, pens, pencils (C800) up to a total of C8,000 per student per year. By paying for the expenses of girls' education, by providing this incentive to the parents who are under economic hardships, the expectations are that a larger percentage of girls will enroll in school and girls' retention rates will improve.

Projected Outputs: As a result of scholarships offered to the girls who attend the primary school, the expected results of this incentive are:

1. an increase in girls' access,
2. an increase in girls' retention,
3. a decrease in girls' drop-out,
4. an increase in girls' completion of the primary cycle,
5. an increase in parents involvement in their daughters' schooling.

2. Library

Objective: This pilot aims at (A) creating a supportive environment for the teaching/learning process and (B) improving the reading and writing capabilities of the pupils of P5 and P6. A classroom library consisting of 150 books and a locked bookcase will be provided for each P5 and P6 class in 16 schools.

Constraints to Overcome and Rationale for Proposed Project: An extremely important constraint is the serious lack of a supportive atmosphere for the teaching/learning process. Often the parents of the students in rural areas are illiterate, and the home does not provide any materials in support of reading development.

There is a serious shortage of books and printed materials in nearly all the rural areas. In addition, there is a widespread shortage of textbooks in the primary schools. In the scholastic year 1990/91, a number of primary schools received the textbooks in March 1991. The students spent six months of their scholastic year without any textbooks to support their learning activities.

Interventions: The objective of this pilot activity can be achieved through the introduction of two separate, but linked, interventions. The first intervention is to purchase a collection of approximately 150 children's books for each school selected for this proposed pilot, thus providing a total of 4,000 books for 16 schools. We recommend that approximately half of the collection would be purchased from Ghana and West Africa and the second half internationally. The Ghanaian and West African books will cover topics such as Ghanaian and African history, heritage, traditions, stories in the Ghanaian national languages and other topics, while the international books will cover topics such as maths, science, technology, nature, environment and other topics. The choice of the books needs to be appropriate to each of the levels of reading and comprehension in P5 and P6. A preference should be given to books with attractive colored pictures and illustrations. The collection of books needs to be based on a balance between titles that are fully relevant to the specificity of the topics introduced in the teaching/learning process of P5 and P6, and titles that introduce creativity and innovativeness. The library's aim is to create a supportive and educationally conducive environment, thus motivating children to engage in reading and writing. The collection of books will need to be stored in a locked book-case in each P5 and P6 classroom.

Second, an in-service training will be provided for the teachers of P5 and P6 on how to use a library system and how to integrate classroom and homework activities with the material available in the classroom library.

One of the features of the workshop might be a session on the techniques of story telling, aimed at improving pupils conversational skills. As a result of this specialized in-service training, the teachers of P5 and P6 will be able to effectively assume the role of the classroom librarian.

Projected Outcomes: At the end of the first year of implementation of the two interventions of this pilot the expected outcomes are:

- increased reading capability and a better grasp of the English language,
- decreased drop-out/increased retention,
- improved attendance.

3. Community Involvement

Objective: The objective of this pilot is to increase the raprochement between the values of the school and the values of the community by increasing the community involvement in the school in general and in classroom input in particular. Community outreach will provide information within the town meeting context on the value of educating female pupils; lecture and video will be used. In addition, parents will be encouraged to become directly involved in specific classroom activities as Invited Guest Speakers on topics related to their own fields of work.

Constraints to Overcome and Rationale for Proposed Project: In certain areas there is a lack of communication between the school and the community. The result is that many parents do not take any interest in the school as a community-based social institution. These parents need to learn more about the benefits of primary education and the value of completion of primary school. The communication gap between the school and the community needs to be narrowed. A raprochement between the school and the community through the involvement of the parents in discussions and active participation in the schools can result in a better understanding of the value of education and stronger support from the parents towards the primary educational system.

Interventions: To achieve the objective of this pilot activity, three consecutive interventions are proposed:

- An in-service training workshop, of not more than three days, on community and parents involvement in school matters will be designed and delivered to the teachers of selected remote primary schools.

- Up to five "town-meetings" will be held in each of the pilot site villages. The "town-meetings" will be organized and facilitated by the head teacher and teachers. The discussions of these town-meetings will focus on the value of primary education and the benefits resulting from the completion of primary education.

- Parents will participate in actual classroom sessions. As a result of the town meetings, the head teacher and/or the teachers will facilitate the visits (a few) of certain parents to the school and the participation of the parents in actual classroom presentations on topics emanating from the daily lives and values of the community.

Projected Outcomes: As a result of the raprochement between the values of the school and the values of the community, and as a result of increased involvement of the parents in actual classroom input, the expected outcomes of this proposed pilot project, at the end of the first year of implementation, would be the following:

- decreased teacher absenteeism,
- decreased students drop-out,
- improved pupil attendance, and
- increased retention.

By the second and third year of implementation an increase in access manifested in higher enrollment rate is also projected.

4. Furniture for Pupils

Objective: To attract a larger number of poor children to school by alleviating the economic hardships of the parents. This pilot aims at decreasing the direct cost of schooling by providing free desks and chairs to pupils in P1 through P6 in two schools (approximately 360 pupils).

Constraints to Overcome and Rationale for Proposed Project: The most acute constraint to primary education is the poor socio-economic condition of the rural population. An important consideration is the private costs (both direct and opportunity cost) that a family needs to pay in order to place a child in school. These costs are likely to be quite high, relative to total family income. Poor families are more likely to be self-employed and, therefore, able to use children's labor for economic productivity. For example, rural families are more likely to use children's labor in farming. Direct educational costs such as furniture (desk and chair), book fees, and uniforms are likely to be more difficult to afford for those with lower cash incomes and larger in-kind incomes, such as farmers. Hence, actual school attendance is likely to be lower among the poor in rural areas. This is what the data substantiates. A strategy to reverse this would require an initiative to lower the private financial outlays for the direct cost of attending school for under-represented groups. Lowering the direct costs could be achieved by such measures as differential user-costs in select locations, or by subsidizing the most expensive items that parents have to finance, such as chairs and desks. The subsidizing of direct costs by offering the pupils free furniture needs to be channelled to those targeted groups whom the MOE desires to attract into the primary education system.

Intervention: This activity proposes that PREP provide free desks and chairs for all the pupils in two select primary schools in economically depressed areas. EIP will provide a cash grant to the district administration where the pilot will be implemented. The district administration will hire local artisans to construct the required number of desks and chairs for the selected schools. Each desk will be constructed for two students. The design and measurements of the desk are in Annex C. The number of desks will be half of the total number of students from P1 to P6 (two pupils to a desk).

By alleviating some of the parents direct costs by providing the furniture of the school, PREP is testing the correlation between direct cost of schooling and attendance/persistence in school. The assumption is that lowering the direct costs of schooling will increase access and retention.

The pilot is also proposing to store the furniture in the school in order to minimize the physical burden of the pupils in carrying the furniture back and forth between homes and school. To be able to store the furniture, this pilot activity will also provide for construction of an appropriate locked storage room within the school premises for these items.

Projected Outputs: As a result of this activity PREP expects that the parents of the selected economically depressed areas will send a higher percentage of their children to school and will retain them in school for a longer period.

5. Houses for Head Teachers/Teachers

Objectives: (A) To attract trained head teachers and trained teachers to remote villages where housing is not readily available, and (B) to enhance the image of the head teachers.

Constraints to Overcome and Rationale for Proposed Pilot: According to the 1989/1990 statistics of the Ministry of Education, there are 13 districts in Ghana that have a very high percentage of untrained teachers and head teachers, a percentage that varies between 86.15% and 65%. The ranked order of these districts is presented on the following page.

The profile of these districts highlights several characteristics common to the disadvantaged areas where educational inequities occur. The majority of these district share the following living conditions:

- -- rural and poor,
- -- not easily accessible,
- -- roads that lead to those districts are not asphalted,
- -- lack of running water,
- -- during the rainy season transportation becomes nearly impossible and on certain days of the rainy season some areas of these districts get cut off,
- -- scarcity of public transportation, and
- -- lack of availability of housing for teachers from outside the district.

The existence of these conditions, coupled with the fact that head teachers salaries and prestige are not high, lead to the concentration of a vast majority of untrained head teachers and teachers in these districts. To change this situation, we propose to build locally appropriate houses for the trained head teachers and a few selected trained teachers posted to a primary school in two of the above mentioned districts. The MOE will make the final decision regarding the selection of the two districts. Building the houses for the head teachers/teachers would be an incentive to attract trained head teachers/teachers to those areas where the living conditions are very depressed.

<u>Intervention</u>: First, the MOE will make the selection of the two districts and the two schools within these districts. PREP will then intervene by offering a cash grant to the selected district administrations to coordinate with the community leaders the actual construction of the houses. We recommend that the design of the

RANKING OF DISTRICT ACCORDING TO PERCENTAGE OF TEACHERS WHO ARE UNTRAINED 1989/90

REGION/DISTRICT	TOTAL NO. OF TEACHERS	TOTAL NO. OF UNTRAINED TEACHERS	% UNTRAINED	RANK
TOLON-KUMBUNGU DISTRICT OF NORTHERN REGION	232	199	86.15	1
SAVELUGU-NANTON DISTRICT OF NORTHERN REGION	204	155	81.58	2
AFRAM PLAINS DISTRICT OF EASTERN REGION	670	524	77.74	3
GUSHIEGU-KARAGA DISTRICT OF NORTHERN REGION	61	47	75.81	4
SABOBA-CHEREPONI DIST. OF NORTHERN REGION	113	85	74.56	5
SENE DISTRICT OF BRONG AHAFO REGION	274	205	74.55	6
JUABOSO DISTRICT OF WESTERN REGION	904	637	69.92	7
YENDI DISTRICT OF NORTHERN REGION	308	200	68.03	8
ZABZUGU-TATALE DISTRICT OF NORTHERN REGION	97	63	67.02	9
AMANSIE WEST DISTRICT OF ASHANTI REGION	447	292	65.77	10
ADANSI EAST DISTRICT OF ASHANTI REGION	590	385	65.70	11
SALAGA DISTRICT OF NORTHERN REGION	474	305	65.31	12
ATEBUBU DISTRICT OF BRONG AHAFO REGION	556	364	65.00	13

houses be the same as those designs the MOE is proposing in its housing scheme for head masters. The structures proposed should be houses with two-bedrooms, an office that can also be used for storage of school materials, a kitchen, and a one-unit detached VIP (a design of the structure of the house is in Annex C).

Projected Outputs: This pilot is expected to produce the following results:

-- a higher number of trained head teachers and trained teachers will be posted and retained in remote areas,
-- full involvement of the parents/community in the schooling of their children as a result of their involvement in the construction of the head teachers/teachers' houses,
-- an increase awareness by the head teachers/teachers of community support and appreciation,
-- decreased absenteeism of teachers,
-- decreased drop-out, increased retention,
-- improved quality of education.

6. Textbooks

Objective: To improve the learning environment by providing each pupil with free basic textbooks, notebooks, pens and pencils. The assumption is that improved quality of the learning environment will decrease drop-out and increase retention.

Constraints to Overcome and Rationale for Proposed Pilot: This pilot activity aims at overcoming two major constraints. The first being that educational inputs are not equally distributed throughout the nation. The second constraint postulates that the direct costs of schooling are a burden for the economically depressed populations.

It is estimated that parents pay approximately ¢800 (about $2.25) per pupil per year on book fees, notebooks, pens, pencils, pencil sharpener, eraser and ruler. In addition, they have to pay for the uniforms, chairs and desks. Often poor parents end up not buying all the basic necessities for their children in school.

Often, in rural areas, two or more pupils share the basic textbooks. A major reason for this is that many parents do not buy the full compliment of basic necessities for schooling. Another reason is the fact that educational inputs are not equally distributed nationally, with some districts receiving the learning materials much later than other districts. Once the district education office receives those materials, it is up to the efforts of the head teacher to organize transportation to collect the learning materials from the district office and to get them to his/her school. During the 1990/91 school year, a large number of schools, specifically those in remote areas, did not receive the learning materials till March 1991. This delay meant that the primary school children in many of the remote schools spent the first six months of the year without textbooks.

In order to alleviate this constraint, the proposed pilot aims to provide all basic textbooks for all the pupils in two primary schools and to evaluate the results in terms of impact on children's academic performance at the end of the scholastic year.

Interventions: The PREP staff will have to ensure that every pupil attending the classes of the selected primary schools will receive the package of basic learning materials free of charge. It is also proposed that PREP provide every pupil free notebooks, pens, pencils, eraser, ruler and pencil sharpener. In addition, PREP will need to ensure the arrival of the learning materials during the first two weeks of the 1991-92 school year.

Projected Outputs: As a result of this pilot, the expected outcomes are:

- improved skills in of reading and writing,
- decreased drop-out,
- increased retention, and
- improved achievement scores in English and mathematics.

7. Remote Area Incentive

Objective: To assign and retain a higher number of trained teachers within the primary schools of remote, difficult to access areas. To overcome the constraint of geographical remoteness, bicycles will be given to newly assigned trained teachers in selected remote areas.

Constraints to Overcome and Rationale for Proposed Project: One of the most serious constraints to an equitable educational system is geographical remoteness. This remoteness impacts on all aspects of the daily lives of those who live in the remote areas. Geographical remoteness often means areas without electricity, without running water and, most importantly, without asphalted roads. A large number of the newly appointed teachers to remote rural areas end up either not going to their designated post, or leaving their designated post after their first visit. The proposed pilot is designed to compensate for the hardships of living and working in the remote areas by offering a remote area incentive package.

A bicycle will be given to trained teachers and a motor-bike will be given to the trained head teachers to facilitate mobility. Often the teacher does not find accommodation in the village he/she is posted to, but rather finds it in the nearest town to his/her village, and would have to commute between his/her home and the school. These remote areas do not have facilities such as regular public transportation, hence the teacher would have to walk long distances between home and school. In areas such as the remote districts of the Northern and the Brong-Ahafo Regions, the bicycle is a main mode of transportation. A bicycle per trained teacher would serve as an incentive and would help to overcome transportation and mobility problems.

Interventions: To achieve the objective of this pilot activity, two interventions are proposed. First, the Ministry of Education will issue a directive that the six chosen schools within the selected district(s) will receive at least 50% of their new staff allocation as fully trained teachers. When the newly appointed trained teachers establish themselves in their schools at the beginning of the first term, the MOE/PMU will deliver a bicycle to each trained teacher in the selected schools.

Projected Outcomes: The following are the expected outcomes as a result of the implementation of this proposed pilot activity:

- an increased number of trained teachers working in remote areas,
- an increased mobility for the teachers in remote areas, therefore a decreasing absenteeism among teachers, specifically on rainy days,
- an improved self-image of teachers,
- an increased teacher motivation,
- an improved quality of teaching,
- a decreased percentage of drop-out.

8. Increased Retention Competition

Objective: This activity aims at motivating the parents as well as the head teachers and teachers of a cluster of six primary schools by organizing a competition among the six schools and providing an incentive in the form of a cash award of C500,000 (about $1,337) to the PTA of the school that wins the increased retention competition.

Constraints to Overcome and Rationale for Proposed Project: The Ghana Education Sector Review Update (December 1989) highlighted the absence of incentives to motivate teachers in their work. In the present system there are no incentive schemes for teachers or head teachers; there are no awards, no prizes and no public recognition for the services of the teachers. A competition that results in an awards-giving ceremony, with the presentations of certificates and the grand cash award, may have a positive effect on the attitudes of the teachers.

Interventions: During the launching of this pilot activity, the staff of the MOE/PMU will distribute an information package to the parents, head teacher and teachers of each of the six schools. The information package will explicitly describe the competition and it's objective; it will also specify how the results of the competition will be arrived at, and the rewards offered to the school, the teachers, and the community.

The competition among the six schools will aim at reducing the drop-out percentages within each one of the six grades of primary. The results will be arrived at by comparing the statistics of enrollment, and retention of 1990/91 against 1991/92. Each school will have to present its statistics of 1990/91 as the baseline data, and at the end of each term of the scholastic year 1991/92 current statistics would be collected. By the end of the scholastic year 1991/92, the data will be compared with the data of 1990/91, and the results will be measured against the percentages of drop-out of the previous year. The school that would have experienced the most progress (i.e., the greatest decrease in percentage of drop-out of students per each of the six grades) will be announced as the winning school.

The winning school's PTA will receive cedis 500,000 in cash. The community will decide how to spend the money on improving the school facilities. The involvement of the PTA regarding the expenditure of the prize is an important element. In addition, the head teacher and teachers will each receive certificates of recognition in a ceremony organized by the MOE/PMU.

Projected Outcomes: As a result of motivating and challenging the students, the teachers, the parents and the community at large, the following outcomes within each of the six schools will be expected:

- an increased communication between teachers and parents and stronger linkages between school and community,
- a greater interest on behalf of the parents in the schooling of their children,
- the creation of a team spirit between the head teacher and the teachers,
- a stronger sense of commitment on behalf of the head teacher and the teachers,
- a decrease in the absenteeism of the head teacher and teacher,
- a decreased percentage of drop-out within each one the six primary grades,
- an increase in retention rates within the schools involved in the competition.

PROPOSED PILOT ACTIVITIES

PILOT PROJECT	EQUITY CONSTRAINTS TO OVERCOME	INTERVENTIONS	PROJECTED OUTPUT
I. Scholarships: Payment of all direct costs of girls (desk/chair, books, uniforms, notebooks, pens, pencils) up to C8,000 per student	Financial constraints of parents, which prohibit sending girls to school	Scholarships for girls in P1,P2, P3, P4, P5, P6	Decrease in girls' drop-out Increase in girls' access Increase in girls' retention Increase in girls' completion of primary education
II. Library: Provision of a classroom library consisting of a locked bookcase and 150 books per class for P5 and P6 in 16 schools	Lack of supportive materials to the teaching/learning process	A collection of 4,000 children's books for the pupils of P5 and P6 Two days workshop for teachers of P5 & P6 on how to develop and maintain a Library system and how to integrate Library use into instructional scheme	Increasing reading capability Decreasing drop-out Improving quality of education in reading & writing areas
III. Community Involvement -Community outreach re. value of educating female pupils, within the town meeting context, using video & lectures. Parents direct involvemeant as Guest Speakers in classrooms.	Lack of information related to the value of primary education by parents in rural communities Lack of interest and/or alienation of parents and community from school related activities	In-service training for teachers on strategies to involve communities in school affairs Up to five town meetings to present role-models & video tapes on the value of primary education. Discussions; recognition of outstanding educated persons from the community Participation of parents in actual classroom input	Raprochement between values of school and values of community Increased community involvement in actual classroom input Decreased teachers absenteeism Decreased students drop-out Increased retention Increased access over the span of a year

PROPOSED PILOT ACTIVITIES

PILOT PROJECT	EQUITY CONSTRAINTS TO OVERCOME	INTERVENTIONS	PROJECTED OUTPUT
IV. Furniture for pupils: Provision of free desks & chairs for all pupils, P1 through P6, in two schools (apx. 360 pupils)	Economic hardships resulting in inaffordability of education-related indirect costs	Providing free furniture for the school i.e. free chair and free desk for all pupils from P1 to P6.	Decrease in drop-out Increase in retention Increased access over the span two/three years
V. Housing: Provision of housing for trained Head-Teacher and Teacher in two remote areas	Geographical remoteness resulting in unavailability of housing for teachers, leading to shortage of trained teachers in remote areas	Construction of locally appropriate housing for trained head-teacher and/or teachers in remote rural villages	Increased retention of trained teachers in remote rural villa Improved quality of education in terms of students achieveme Decreased drop-out Increased retention of student
VI. Textbooks: All pupils will receive a free set of basic learning materials (textbooks, notebooks, pens, pencils, eraser, ruler, sharpener); P1 through P6, in two schools, apx. 360 pupils	Direct cost of schooling contributing to economic hardships Educational inputs not equally distributed Widespread shortages of textbooks, and learning/reading materials	All basic textbooks plus note books per child per grade	Decreased drop-out Increased retention Improved quality of education

PROPOSED PILOT ACTIVITIES

PILOT PROJECT	EQUITY CONSTRAINTS TO OVERCOME	INTERVENTIONS	PROJECTED OUTPUT
VII. Remote Area Incentive Package: Provision of motor-bike to trained Head-Teacher and a bicycle to trained Teachers in six schools	Geographical remoteness resulting in unequal distribution of trained Head Teachers and Teachers	Policy that deploys trained teachers to the selected schools in the chosen remote districts A remote area incentive package for trained Head Teachers and Teachers, i.e. bicycle or motor-bike	Increased number of trained teache in remote areas Increased mobility of teachers of remote areas Increased teachers' motivation Decreased teachers' absenteeism
VIII. Increased Retention Competition: Competition among six schools within a District to achieve lowest drop-out percentage for the academic year. Cash award to winning school PTA: C500,000,000	Lack of teachers' motivation resulting in high percentage of absenteeism of teachers/students Lack of community involvement in school	Prize for the school that wins competition of increased percentage of retention in P1 through P6 Certificates for head teacher and teachers	Creating a team spirit between head teacher and teachers Decreasing absenteeism of teachers Increasing retention of students Increased communication between community/PTA and school

The Special Covenants of the Program Agreement between the MOE and USAID indicate that fifty percent of these pilots must be implemented in the Northern, Upper East, and Upper West regions.

The following is a chart that indicates the primary group of beneficiaries and the secondary group of beneficiaries for each of the proposed pilots.

Proposed Pilot	Primary Beneficiaries	Secondary Beneficiaries
Scholarships	Girls Students	Parents/Community
Library	Students	Teachers
Community Involvement	Teachers	Students/Parents
Furniture for Pupils	Students	Parents
Housing	Head-Teacher/Teachers	Students/Community
Textbooks	Students/Teachers	Parents
Remote Areas Incentive	Trained Teachers	Students
Increased Retention Competition Award	Community/Students	Teachers

IV. PROPOSED SELECTION CRITERIA

A. Criteria for Selection of Districts for Pilot Project Placement

The school districts which fall within the lowest quartile (or the lowest 25% of all Ghanaian districts) as ranked by the following indicators shall be selected for inclusion in the pilot activities:

1. District Level Indicators (DLI): Quantitative data of (a) the ratio between 1989 Regional enrollment as percent of total enrollment, and 1984 population as percent of total enrollment; (b) total retention of P2 through P6 as percent of P1 by District ; and (c) gender disaggregated data as percentage of females in total enrollment by District.

2. School/Community Indicators (SCI): Selection should include the following variables in order to determine if a basis for equity improvement exists: (a) school infrastructure; (b) access road; (c) number of schools/school consolidation; (d) level of Teachers qualification; (e) gender disparity within a school; (f) potential for community participation; (g) alternative school organization and incentive systems currently under consideration or in progress.

B. Criteria for Selection of Pilot Sites

Selection of districts and specific school sites is a critical element in EIP planning and requires that careful account be taken of the proposed indicators. For direct concern of the EIP pilots are schools that fall largely inside the established criteria and where the basis for equity and quality improvement exists. The following guidelines are suggested for making the site selections:

(1) Preference should be given to schools serving rural depressed communities; the breakdown will approximate the relative proportions of the population in these areas, as well as the level of enrollment and retention rates.

(2) Participating schools must demonstrate serious educative intent and be willing to adopt improved pedagogical methods ensuring, for example, sufficient mastery of both the local and English language.

(3) The school location criterion is a particularly important one and involves taking account of the relative merits of concentration and dispersion of effort. For example, how the distribution of schooling relates to population distribution and to existing patterns of social and economic activity, and what would need to be done locally to ensure better coverage of the school-age population.

(4) Resources would be furnished to participating schools on the basis of an agreement between MOE and the school in which the following conditions might be stipulated:

(a) the criteria suggested above; (b) the technical and material support to be provided to the school; (c) the means of internal monitoring and accountability; and (d) the tangible improvement in equity and in quality of instruction.

Indicators by which these achievements will be measured include:

-access to educational opportunity for all eligible children has increased;
-admission and retention of boys and girls in P1 through P6 has improved;
-more trained teachers are assigned to target districts.

(5) An Enabling Environment: In the selection of a district, preference should be given to where the built-in failure elements are not predominant. For example, if the educational human resources of the district do not support the objective of the pilot project, it will not be wise to impose such a pilot on that specific district. Another example of an environment that is not enabling would be the extreme scarcity of pupils in a school of a given district where a pilot is being proposed. This extreme scarcity of pupils might become an impediment to the expected reasonable results of a specific pilot.

(6) The conducive local social environment can play a determining role in the final decision of which district or which school will be selected. Local severe frictions and ethnic rivalries might prevent the selection of a district favored by the statistical indicators. An illustrative example is the district of Gushiegu-Karaga in the Northern Region. The statistical indicators place that district last among the 110 Districts when ranking all Districts according to the percentage of girls' enrollment. Therefore, Gushiegu-Karaga would be an ideal candidate district for the implementation of a pilot that aims at increasing girls' enrollment and retention, but due to present uncertain social conditions there, it is not advisable to implement a pilot project in Gushiegu-Karaga at this time.

C. Documentation

In order to satisfy the conditions precedent to disbursement of the second tranche of PREP funds, as indicated in Section 2.2(d) of the Grant Agreement, AID will need to review the following documentation:

An official MOE Equity Improvement Plan Document which provides evidence that Equity Improvement Program (EIP) pilots have started in at least twenty (20) key districts with severe equity imbalances. Furthermore, some documentary evidence (in the form of illustrative budget) that necessary and appropriate level of resources have been allocated to test at least ten Pilot Equity Improvement activities. The Equity Improvement Plan must contain the following information:

(1) Names of the targeted districts where (EIP) pilot activities have already been started. Providing brief description of each activity and date of start for each pilot activity.

(2) A copy of illustrative approved budget as a proof that there is sufficient and appropriate level of funding available to carry out these activities.

(3) A statement describing the criteria used in selecting districts to participate in the EIP pilot activities.

(4) Documentary proof of existence of EIP Selection Committee to include names, positions and agency representation of all committee members.

It is expected that most of the pilot activities (more than 50%) will be in the areas where most imbalances exist, notably in the Northern, Upper-East and Upper-West Regions.

D. Districts with Severe Imbalances as it Relates to Equity Issues

An efficient management approach, a detailed implementation plan, and a very detailed monitoring system are needed for the pilot

activities to succeed. The merits of concentration and dispersion of efforts need to enter the equation of selection of sites, and how this selection impacts on the logistics of the implementation and the monitoring of the proposed pilots.

It is important to keep in mind that MOE and PREP agreed that of the total Equity implementation Plan budget, 75% shall be expended on equity activities in districts that fall within the lowest quartile and 25% in the rest of the Ghanaian districts.

To determine the districts that fall within the lowest quartile from an equity educational point of view, we examined the statistics from the MOE for 1988/1988 and for 1988/1990. (The statistics of 1990/1991 were not fully collected at the date of the preparation of this report.) We examined enrollment statistics disaggregated by gender; we examined retention statistics based on P6 as a percentage of P1; we looked at the percentages of trained versus untrained teachers in the 110 districts.

The following are a series of tables that highlight the most disadvantaged districts when these equity educational factors are taken into consideration.

Note that there has been a reorganization and redistribution of educational districts, which resulted in increasing the number of districts from 84 to 110. This explains why, for example, when we are trying to follow the results of the most disadvantage district in the Ashanti region, the 1988/89 table reads only Ahafo Ano, while the 1989/1990 table presents this area as two districts: Ahafo Ano South and Ahafo Ano North. Similarly, the most disadvantaged district in the Brong Ahafo region reads Atebubu in the 1988/1989 table, while it reads as two districts in the 1989/1990 table, Atebubu and Sene.

It is also important to note that even though there has been progress regarding equity issues in many of the districts listed, in some of those districts the educational equity issues did not improve. The 1988/89 figures show that Atebubu had a 42% retention rate (P6 as a percentage of P1), while in 1989/1990 Atebubu, which was divided into two districts, shows the following percentages in retention: Sene: 32%, and Atebubu: 40%.

Based on the district and school criteria discussed above, the following tables highlight districts within each region that have severe equity imbalances and are, therefore, prime candidates for participation in the EIP pilot activities.

Baseline Statistics by Districts
Equity Implementation Program

Source: MOE Planning, Budgeting, Monitoring and Evaluation Division - 1988/1989

Region	District Enrollment	Male	Female	Total	Per-centage girls	P6 as % of P1 Male	Female	Total Retention
Ashanti	Ahafo Ano	10,896	8,643	19,539	44.23	62.0	46.0	55.0
Brong Ahafo	Atebubu	9,157	6,232	15,389	40.50	48.0	35.0	42.0
Central	Twifo Praso	8,753	6,384	15,137	42.17	58.0	39.0	49.0
Eastern	Afram Plains	7,854	5,764	13,618	42.33	56.0	28.0	43.0
Greater Accra	Dangme East	4,653	3,272	7,925	41.29	55.0	36.0	46.0
Volta	South Tongo	4,287	4,201	8,488	49.49	73.0	29.0	46.0
Western	Half Assini	4,735	3,010	7,745	38.86	44.0	29.0	37.0
Northern	Zabzugu-Tatale	555	179	734	24.39	6.0	9.0	7.0
	Gushiegu-Karaga	1,694	447	2,141	20.88	14.0	8.0	12.0
	Tolon-Kumbungu	3,744	824	4,568	18.04	17.0	9.0	15.0
	Savelugu-Nanton	3,530	1,121	4,651	24.10	18.0	13.0	17.0
	Salaga	7,826	4,611	12,785	37.94	22.0	15.0	19.0
Upper East	Bawku	11,118	5,269	16,387	32.15	35.0	21.0	30.0
	Navrongo	5,321	3,960	9,281	42.67	32.0	28.0	31.0
	Sandema	1,623	1,759	3,382	52.01	32.0	29.0	31.0
Upper West	Nadawli	2,970	2,132	5,102	41.79	29.0	27.0	28.0
	Jirapa-Lambussie	3,706	2,155	5,861	36.77	32.0	26.0	29.0
	Wa	7,676	4,686	12,362	37.91	40.0	28.0	35.0

Baseline Statistics by Districts
Equity Implementation Plan

Source: MOE Planning, Budgeting, Monitoring and Evaluation Division - 1990/1991

Region	District Enrollment	Male	Female	Total	Per-centage of Girls	Total No of St. in P1	Total No. of St. in P6	Total Retention
Ashanti	Ahafo Ano South	7267	5840	13107	44.56	2899	1637	56.5
	Ahafo Ano North	4786	3926	8712	45.06	1975	1119	56.7
Brong Ahafo	Sene	3174	2221	5395	41.17	1571	502	32.0
	Atebubu	7156	4745	11901	39.87	3042	1218	40.0
Central	Twifo Praso	9108	7161	16269	44.02	3409	1995	58.5
Eastern	Afram Plains	7886	6125	14011	43.72	3570	1516	42.5
Greater Accra	Dangme East	5580	4262	9842	43.30	2434	1857	76.3
Volta	South Tongo	5191	4436	9627	46.08	2547	1096	43.0
Western	Jomoro	5126	3532	8658	40.79	2284	819	35.9
Northern	Zabzugu-Tatale	1719	832	2551	32.61	767	197	25.7
	Gushiegu-Karaga	1971	388	2359	16.45	754	136	18.0
	Tolon-Kumbungu	3822	1085	4907	22.11	1435	425	29.7
	Savelugu-Nanton	3324	1116	4440	25.14	1313	389	29.6
	Salaga	7186	4370	11556	37.82	3027	982	32.4
Upper East	Bawku East	11245	5191	16436	31.58	5263	1396	26.5
	Bawku West	2093	1043	3136	33.26	1145	251	21.9
	Bongo	2095	1374	4279	29.51	1683	292	17.3
Upper West	Nadawli	3139	2321	5460	42.51	1444	482	33.4
	Jirapa-Lambussie	3806	2305	6111	37.72	1697	517	30.5
	Wa	8599	5413	14012	38.63	3535	1456	41.2

V. Implementation Plan

A. Proposed Implementation Plan

Prior to disbursement of the second tranche of PREP Funds, the GOG will submit to USAID/Ghana "Evidence that an AID-approved pilot program for system equity improvement has been initiated by the MOE". The second tranche is due to be released by December 27, 1991. Therefore, the EIP pilot activities need to be initiated by the beginning of the scholastic year 1991/1992, hence the importance of a proposed implementation plan.

The following proposed implementation plan takes into consideration three major agreement points between the MOE and USAID. These are:

1) that 75% of the EIP pilot activities shall be expended on equity improvement activities in districts that fall within the lowest quartile of all Ghanaian districts, as ranked by quantitative data on retention and enrollment indicators that are total, and/or gender disaggregated,

2) that within each region there are disadvantaged districts, and that it would be preferable to test pilots in all regions by targeting the most disadvantaged districts within each region,

3) that the selection of specific schools targeted within those districts will be conducted by MOE, with due consultation with USAID.

To satisfy the first two points, and for comparative reasons among the regions, we proposed that:

1) the three pilot activities titled Scholarships, Library, and Community Involvement be tested in 16 different schools, one school in each of the ten regions and two extra schools in the Upper East, Upper West and Northern regions;

2) each of the three pilot activities titled Furniture for Pupils, Housing, and Textbooks be tested in two schools (thus making a total of six schools); and

3) each of the two pilot activities called Remote Area Incentive Package and Increased Retention Competition be tested in six schools (thus making a total of twelve schools).

B. Management Approach

Within the MOE structure, the PMU (specifically the PREP Coordinator and the PMU Equity Coordinator) will be in charge of managing and implementing the Equity Improvement Program pilot activities. Within USAID, the Human Resource Development Officer and the Deputy Director of PREP will be in charge of coordinating the management of EIP pilot activities with the MOE to ensure the smooth implementation of the pilot activities.

In order to ensure a successful implementation of the EIP pilot activities, a management approach based on planning, coordination, close monitoring and a feedback mechanism, is required.

1. Planning: The pilot activities of the EIP is a complex, multifaceted activity. It requires a macro plan encompassing the eight pilots and their location (the 66 sites/schools), their duration, the staff needed to implement them and a financial management tool to project expenditure and to track it. It also requires a separate management plan for each of the eight pilots, stating management interventions needed such as: field visits to

Number of Proposed Schools Per Pilot Per Region

Pilots/ Regions	Scholar ships	Library	Community Involvement	Furniture per pupil	Textbooks	Housing for Head Teachers	Remote Area Incentive	Decreased Drop-out Competition	Total No. of Schools per Region
Upper East	3	3	3						
Upper West	3	3	3						
Northern	3	3	3						
Brong/ Ahafo	1	1	1						
Ashanti	1	1	1						
Western	1	1	1						
Central	1	1	1						
Eastern	1	1	1						
Greater/ Accra	1	1	1						
Volta	1	1	1						
Total No. of Schools	16	16	16	2	2	2	6	6	66

The Ministry of Education will select the districts and the schools were the pilots will be implemented and tested.

launch pilots, supplies needed by specific dates, baseline data collected by specific dates, etc. These two plans have to be developed and agreed upon by MOE and USAID.

2. Coordination: Given the complexity of the implementation of the pilot phase of EIP, coordination between the different key implementors becomes crucial. The MOE key staff involved in the EIP, the USAID/HRDO and the PREP Deputy Director need to allow a continuous flow of information regarding the planning, management and implementation of each of the pilots.

Meetings on a regular basis need to be set-up. A dynamic process of planning each of the sequential steps, and reviewing progress will prove to be effective and efficient. Through that process, both agencies (MOE and USAID) will have the opportunity to continuously attend to concerns and respond to needs emanating from the implementation of the pilots.

3. Monitoring: The proposed pilot phase of EIP encompasses activities to be implemented in 66 primary schools. Close monitoring will allow precise information and knowledge about the progress of each one of the pilots. It will also allow quick recognition of conditions that deviate from the pilot activities plans, and will permit correction of action. Monitoring, if closely implemented, can become the mechanism that will ensure quality and financial control over the implementation of each of the pilots in the 66 schools.

4. Feedback Mechanism: As a result of the Monitoring activity, information will be flowing back to both MOE and USAID about the progress of the pilots. This information will take the form of written reports, statistics and oral feedback. This feedback mechanism can serve as a tool for adjusting or modifying either the macro plan or the specific management plans of implementation, or both.

5. EIP Implementors: The proposed implementation plan and management approach underline the important need for a series of field trips to properly launch, and closely monitor, the pilot projects. The EIP Coordinator at the MOE and/or the MOE PREP Coordinator will have, over the period of the first year, to visit

several times the 66 schools where the pilots are being implemented. It is highly recommended that a USAID representative also visit the schools where the pilots are placed. The first year of the pilot activities is crucial. A visit to each of the 66 schools is recommended before the launching of any of the pilots. This first visit's objectives would be to inform the head teacher and teachers about the pilot that will be implemented in their school. If, and when, there is a need to inform other groups, such as the parents, the district education officer, the area implementation committees, or village councils, then the EIP team will do so. Also during that first visit baseline data on enrollment and retention, disaggregated by gender, need to be collected from each of the 66 schools. For implementation and monitoring reasons, other visits during the first year will be needed. Given the clear need for extensive field work, it is recommended that USAID hire a part-time consultant to work with the HRDO and the PREP Deputy Program Manager on the coordination of the implementation of EIP pilot activities. It is recommended that the consultant possesses among other qualifications the following:

1. In-depth knowledge of Primary Education in Ghana,
2. In-depth knowledge of Educational Equity issues,
3. Field experience, preferably rural field experience,
4. Management skills, and
5. Willingness to travel extensively in-country.

Both the HRDO and the PREP Deputy Program Manager will be responsible for other parallel PREP activities and will not be able to do the required field work. The presence of an EIP consultant will facilitate their work and will assist them in managing and monitoring this component.

C. Implementation Schedule

The pilot activities of the EIP can take one to three years. A minimum of one year would be needed before any outputs could be observed, and ideally, three years would be required before any significant analysis and indepth impact evaluation could be done as a result of the tested pilots.

We recommended that the EIP Pilot Phase be implemented for three years, we also recommend that at the end of the first year a progress review be conducted in the form of a formative evaluation, and at the end of the three years a summative evaluation be conducted.

However, the first year of the EIP pilot activities is crucial. The review for the disbursement of the second tranche which will take place in the final quarter of 1991 and will examine if the first phase of the EIP pilot activities has been initiated.

To be able to meet this condition, a series of activities have to immediately take place. The following is an attempt to list the major necessary actions that will assist in the effective implementation of the activities of the first year:

1. Selection of the districts and of the 66 sites. Final decisions need to be made before the beginning of the scholastic year 1991/1992; i.e., before October 1991.

2. Development of a macro plan encompassing the eight pilots and a separate management plan for each pilot. The two plans should cover: location, duration, field visits required, a financial management tool to project expenditure, the staff needed to implement and monitor the pilots.

3. Preparation for the launching of all the pilots. Preparation includes purchase of educational materials, organizing and putting together an information package about each pilot, designing training, etc. This activity needs to be ready by the beginning of the scholastic year 1991/1992.

Pilot Phase of EIP/First Year

Implementation Schedule/Time Line

Activities / Months	AUGUST 1991	SEPTEMBER 1991	OCTOBER 1991	NOVEMBER 1991	DECEMBER 1991	JANUARY 1992	FEBRUARY 1992	MARCH 1992	APRIL 1992	MAY 1992	JUNE 1992	JULY 1992	AUGUST 1992	SEPTEMBER 1992
Selection of districts and of the 66 schools														
Macro plan and Separate Management plan by pilot														
Preparation for Launching														
o purchase of materials														
o preparation of info package														
o designing training														
First visit to the field														
o collection of baseline data														
o delivery of info package														
Second Tranche Review														
Series of field visits														
o deliver educational supplies														
o deliver training														
o monitor progress														
Formative Evaluation														

4. A visit by the EIP pilot activity implementor(s) to all 66 sites. It is preferable that the visit takes place at the beginning of the scholastic year 1991/1992. The visit's objectives are:

- To collect baseline data from each of the 66 sites. The baseline data needs to cover three scholastic years: 1989-1990, 1990/1991, and the beginning of 1991/1992.

- To deliver an information package to the head teacher, the teachers, and to other appropriate individuals concerning the selected pilot that will be implemented and tested in their community. When these first two objectives of the visit are accomplished, the pilot phase of the EIP could be considered launched.

6. Several field visits to the sites of the pilots either to deliver educational supplies, or to deliver training, or to meet with the community and verify the progress of some interventions such as building the head teachers houses or constructing the pupils furniture. This is an on-going activity throughout the scholastic year.

7. A progress review, or formative evaluation, by mid-year 1992.

Based on the formative evaluation and direct observations, analysis about the progress of each pilot will be made.

VI. Monitoring and Evaluation

A. General Equity Objectives to be Measured Over the Life of Project

Equity goal attainment within the context of PREP, will be "measured by the enrollment and retention rates of currently underrepresented groups of children." The objectives of Equity are clearly stated in the Special Covenants of the Program Agreement of PREP. The Special Covenants states:

> The grantee shall develop an Equity Improvement Program with the following objectives:
>
> (1) A fifty per cent increase in enrollment in the Northern, Upper East and Upper West regions;
>
> (2) A twenty-five per cent increase in retention rates for all children;
>
> (3) A twenty-five per cent increase in female retention rate especially in the three northern regions;
>
> (4) A fifty per cent decrease among females in the drop out rate, especially in the three northern regions; and
>
> (5) A fifty per cent increase in the number of trained teachers assigned to the three northern regions.

These objectives need to be accomplished within the life of the project, i.e., five years.

The first phase of the Equity Improvement Program is planned for three years and is aimed at progressively accomplishing the above mentioned objectives.

B. First Phase Objectives to be Measured

The systematic monitoring of the implementation of the pilot activities will measure the progress of each pilot towards accomplishing it's objectives. Each pilot has very specific projected results, listed as the outcomes against which the success of the pilot will be evaluated.

These outcomes cannot be fully accomplished before at least two full years of implementation, preferably three. During the third year significant results should be assessable.

C. Methodology

Both quantitative and qualitative methodologies need to be utilized in monitoring and evaluating the three years of implementation of the pilot phase of EIP.

A quantitative baseline needs to be collected from each school where the pilots will be implemented. This baseline gender disaggregated data needs to collect statistics on enrollment, drop-outs, repeaters, retention and completion for all the classes at each grade level. Statistics about trained and untrained teachers are also needed. Systematic quantitative data collection will provide the EIP monitors statistical information reflecting the specific progress of each of the pilots. Both equity improvements within each school, as well as problematic issues within each site, could be immediately detected as a result of this close monitoring process.

Qualitative methodologies could be used to interpret and analyze the data, specifically those statistics that detect problem areas. Interviews, questionnaires, group sessions, focus groups and other tools could be used for the qualitative approach.

D. Monitoring and Evaluation Schedule of the Pilot Phase of EIP

Assuming that the pilot phase of EIP will take three years, and assuming the immediate need to meet the conditions precedent of the second tranche, the beginning of the implementation of the pilot phase must start in the very near future, i.e., in September 1991. Therefore, the following schedule for monitoring and evaluation of the pilot activities is recommended:

Year	Months	Activities
1991	September/October	Collection of the disaggregated base line data from the 66 schools
1991	November	Review to verify if preparation for pilots is underway and in certain cases if pilot activities are launched, so second tranche can be disbursed.
1992	January/June	On-going monitoring activities through field visits to the sites of the pilots.
1992	July-August	First Year Formative Evaluation
1993	October/July	On-going monitoring activities through field visits to sites of pilots.
1993	June-July	Second Year Formative Evaluation.
1993/1994	October/July	Ongoing monitoring activities through field visits to sites of pilots.
1994	June/July	Summative Evaluation.

The formative evaluation of July-August 1992 and the Summative Evaluation of June/July 1994 are crucial events in the life of the first phase of EIP. The formative evaluation (1992) will be able to assess the progress of the eight pilot activities, measure drop-out results and some retention results, but will not yet be able to measure enrollment percentage rate improvements in a significant manner. In addition, the formative evaluation will be able to detect the constraints and bottlenecks of implementation, if any, and will address these issues and recommend corrective action. This formative evaluation might highlight the clear success of one or two pilots in terms of their impact on decreasing drop-out and increasing retention rates. If success is fully documented, then the extensive replication of the particular pilot(s) would be recommended.

Finally, the Summative Evaluation of 1994 would have to assess, analyze and measure in-depth the results of each pilot. All projected outputs, including increase in rates of enrollment, need to be measured. Based on the analysis of this Evaluation, recommendations about the nature of the expansion of the Equity Improvement Program will be made. The cost-effectiveness of each one of the pilots will be assessed, the replicability of each one will be separately analyzed, and the extent of replicability will be discussed. The evaluation of 1994 will also be measuring and analyzing the first phase of EIP vis-a-vis the progress made towards achieving the five general objectives of the Equity Improvement Program as a whole.

VII. ILLUSTRATIVE BUDGET

Equity Improvement Program: Pilot Phase

Budget Notes

Assumptions:

- o EIP Pilot Phase is for 3 years.
- o This illustrative budget covers only year one of the pilot phase.
- o Given that the pilots will be implemented in remote areas the size of the schools (specifically during the first year of EIP) is considered medium to small, and the average number of students per class is considered 20.

Notes:

- o Conversion rate is calculated at 390 cedis to $1.00 (the rate of July 1991).
- o This budget covers only the expenses of the interventions of the eight pilot projects and not the management of the Pilot Phase of EIP.
- o Figures regarding costs for housing and furniture construction were obtained from the leadership of MOE.
- o Figures regarding costs of training were obtained from PREP coordinator.
- o Figures regarding costs of items such as textbook fees, direct costs for girls schooling, bicycles etc...were obtained from education district officers during the six days field trip.
- o This is just an illustrative budget that will provide the basis for a working document.

Equity Improvement Program: Pilot Phase

Pilot Title: 16 Schools
Project Profile: 96 Classes
1920 Students (average 20 per class)
768 Girls (40%)

	Cedis	Dollars
Personnel		
Materials		
Equipment		
Project Uniques 768 girls x cedis 10,000=6144000	7,680,000	19,692
Conversion rate 390 cedis = $1.00 Total	7,680,000	19,692

Equity Improvement Program: Pilot Phase

Pilot Title: Library
Project Profile: 16 schools
2 classes: P5, P6 per school
250 books per school
4000 books for 16 schools

	Cedis	Dollars
Personnel		
2 days training for 32 teachers Trainer: cedis 60,000 Teachers training expenses cedis + 150,000 = cedis 210,000	210,000	538.00
Materials		
Books: 4,000 x cedis 1,500=cedis 6,000,000	6,000,000	15,384,00
Other library materials such as cards, covers etc...	700,000	1,794,00
Equipment		
1 cabinet per school 16 cabinets x 15,000= cedis 240,000	240,000	615,00
Project Uniques		
Conversion rate 390 cedis to $1.00 Total	7,150,000	18,333,00

Equity Improvement Program: Pilot Phase

Pilot Title: Community Involvement
Project Profile: 16 schools
6 teachers per school

Personnel	Cedis	Dollars
3 trainers x 10 days x 5,000 cedis	150,000	384.00
96 teachers x 5 town meetings x 2000 cedis	960,000	2,461.00
Materials		
96 teachers x 1,500 cedis	144,000	369.00
Equipment		
Project Uniques		
Travel 96 teachers x 4,000 cedis	384,000	984.00
Travel 3 trainers x 10,000 cedis	30,000	77.00
Lodging: Flat fee to(3) Training Institution	150,000	384.00
Lodging for trainers: 3x5 nightsx5000 cedis	75,000	192.00
Meals 96+3 = 99 (rounded to 100) 100 persons x 1,000 cedis x 5 days	500,000	1,282.00
Conversion Rate 390 cedis = $1.00 — Total	2,393,000	6,135.00

Equity Improvement Program: Pilot Phase

Pilot Title: Furniture for Pupils
Project Profile: 2 schools
240 students (average 20 per class)
120 desks

	Cedis	Dollars
Personnel		
Materials		
Equipment		
Project Uniques		
20 students per classx12 classes 240 students 240 students 2 = 120 desks 120 x cedis 11,700 = 1,404,000	1,404,000	3,600,000
Project Uniques		
Conversion rate: 390 cedis = $1.00 Total	1,404,000	3,600,000

Equity Improvement Program: Pilot Phase

Pilot Title: Housing for Head Teachers
Project Profile: 2 schools
1-2 bedroom unit per school

	Cedis	Dollars
Personnel		
Materials		
Equipment		
Project Uniques		
Northern Sector Unit	4,680,000	12,000
Southern Sector Unit	3,900,000	10,000
Conversion rate: Total	8,580,000	22,000
390 cedis = $1.00		

Equity Improvement Program: Pilot Phase

Pilot Title: Textbooks
Project Profile: 2 schools
240 students

	Cedis	Dollars
Personnel		
Materials		
Basic Textbooks Fees for all students from P1 to P6, plus expenses for notebooks, and all other basic learning materials such as pens, pencils, sharpner, erase etc.. approximately 800 cedis per student cedis 2500 x 240 =	600,000	1,538,00
Equipment		
Project Uniques		
Conversion rate 390 cedis = $1.00 — Total	600,000	1,538,00

Equity Improvement Program: Pilot Phase

Pilot Title: Remote Area Incentive
Project Profile: 6 schools
6 head teachers
30 teachers

	Cedis	Dollars
Personnel		
Materials		
Equipment		
30 bicycles at cedis 27,000	81,000	207,00
6 motor-bike at cedis 4000,000	2,400,000	6,153,00
Project Uniques		
Conversion rate 390 cedis = $1.00 Total	2,481,000	6,361,00

Equity Improvement Program: Pilot Phase

Pilot Title: Decreased Drop-Out Competition Reward
Project Profile: 6 schools compete
1 school wins

	Cedis	Dollars
Personnel		
Materials		
Certificates for teachers and other materials	39,000	100.00
Equipment		
Ceremony for winners	78,000	200.00
Project Uniques		
500,000 for winning school	cedis 500.00	1,282.00
Conversion rate 390 cedis = $1.00 Total	617,000	6,582.00

Equity Improvement Program: Pilot Phase

Pilot Title: 1st year of Pilot Phase
Project Profile: 8 Pilots
10 Regions
66 Schools
7920 Students
or approximately 8000 students

	Cedis	Dollars
Scholarships	7,680,000	19,692,00
Library	7,150,000	18,333,00
Community Involvement	2,393,000	6,135,00
Furniture for Pupils	1,404,000	3,600,00
Textbooks	600,000	1,538,00
Housing for Head Teachers	8,580,000	22,000,00
Remote Area Incentive	2,481,000	6,361,00
Decreased Drop-Out Competition	617,000	1,582,00
Sub Total	30,905,000	79,243,00
Miscellaneous at 5%	1,545,000	3,962,00
Total	32,450,000	83,205,00

ANNEX A

BIBLIOGRAPHY

1. Haddad, Lawrence;
Gender and Economic Adjustment in Ghana, University of Warwick, Coventry, England; December 1989.

2. King, Elizabeth;
Education Girls & Women: Investing in Development; The World Bank; Washington D.C.; 1990.

3. Lindsay, Beverly;
Educational Equity in Cross-National Settings; International, Comparative Education; Pergamon Press; Oxford; 1990.

4. Ministry of Education;
Primary Education Data Management System for Policy Analysis and Planning; Ghana; June 1991.

5. Ministry of Education; Report on Basic Statistics and Planning Parameters for School Education in Ghana; Ghana; July 1990.

6. National Council on Women and Development; Proceedings on the Seminar on Ghanaian Women in Dev; 1982.

7. Rihani, May;
Girls' Education in the Developing World; presented at the Africa Basic Education Conference; Togo, September 1990.

8. Robertson, Claire;
The Nature and Effects of Differential Access to Education in Ga Society.

9. World Bank, Ghana Living Standards Survey, Preliminary Results; Ghana, October 1988.

10. UNICEF, Children and Women of Ghana; A Situation Analysis, Ghana; June 1990.

11. USAID,
Ghana Primary Education Program - The PAIP, February 1990.

12. USAID,
Ghana Education Sector Review Update, December 1989.

13. USAID,
Ghana Primary Education Program - The PAAD - including the Economic and the Social Analysis, May 1990.

14. USAID,
Ghana Primary Education Program - The PAIP, February 1990.

15. Weis, Lois,
Schooling and Patterns of Access in Ghana, Canadian Journal of African Studies.

ANNEX B

LIST OF INDIVIDUALS INTERVIEWED

USAID Accra

1.	Dr. Joseph Goodwin:	Director
2.	Dr. Habib Khan:	Human Resources Development Officer
3.	Dr. Sandy Ojikutu:	Education Program Assistant

Ministry of Education
Accra: Greater Accra

4.	Mrs. Vida Yeboah:	PNDC Deputy Secretary
5.	Mrs. C. Lutterodt:	Coordinator School-Education
6.	Mrs. Van Dyck	
7.	Alhaji Rahimu Gbadamosi:	Director of Manpower Planning
8.	Mrs. Sarah Opong:	Director of Basic Education
9.	Mr. Y. Dwomoh:	Director of Planning, Budgeting Monitoring and Evaluation Division
10.	Mr. William Ahadzie:	Coordinator of PREP

Kumasi: Ashanti

11.	Mr. J.W. Amissah:	Assistant Director
12.	Mr. Antwi Bosiako:	Principal Super-Intendant

Mankraso: Ashanti

13.	Mr. K. Obiri Boateng:	Acting District Education Officer
14.	Mr. K. Amoako-Mensah:	Personnel Officer
15.	Mr. Yaw Anning:	District Training Officer Appointed Member of the District Assembly

Sunyani: Brong-Ahafo

16. Mr. K.A. Arhen:	Assistant Director in Carge of Primary Education
17. Mr. Assiedu Boachie:	Acting Regional Director
18. Mr. S. Entwi:	Assistant Director: Inspectorate Basic Education
19. Mr. S.A. Abosi:	Deputy Regional Director

Atebubu: Brong-Ahafo

20. Mr. W.Y. Danko:	Acting District Education Officer
21. Mr. Abdel Aziz:	Chief Inspector of Teachers
22. Mr. E.K. Abayemah:	JSS Coordinator

Tamale: Northern

23. Mr. J.N. Diakpieng:	Acting Regional Director
24. Mrs. R.S. Bawah:	Assistant Director of Education
25. Mr. A. Tahidu:	Principal Superintendent: Basic Education
26. Mr. L.A. Mcveyang:	Assistant Director: Inspectorate
27. Mrs. F. Habib-Jamila:	Assistant Director: 2nd Cycle Schools
28. Mr. S.H. Zaato:	Principal Superintendent Manpower

Saveluqu: Northern

29. Mr. A.B. Abutu:	Assistant Director of Education
30. Mr. Z.K. Abrokwa:	Deputy Assistant Director

Tolon: Northern

31. Mrs. Dorothy Blange Larbi:	District Assistant Director
32. Mr. Abdullah Yakubu: Tali:	Senior Superintendent Circuit Officer: Tolon
33. Mr. Nabila Al-Hassan Beyon:	Senior Superintendent Circuit Officer: Nyampala
34. Mr. Al-Hassan Abdellah:	Senior Superintendent Circuit Officer: Kumbungo

Daboya: Northern

35. Mrs. Constance Alhassan:	Primary School Teacher: P1

Other Organizations

36. Mr. Nicolas Bennett:	World Bank
37. Mr. Robert N'Tumi:	UNICEF
38. Mr. Robert Roche:	Catholic Relief Services
39. Mrs. Hannah Evans Lutterodt:	Catholic Relief Services
40. Dr. Emily Dumor:	Catholic Relief Services
41. Dr. Ernest Dumor:	Development and Communication Research Limited
42. Mrs. Senna Tagboto:	Children's Books Writer

ANNEX C

1. Design and measures of proposed housing unit for primary school head-teachers' in remote areas.

2. Design and measure of pupils' desks.

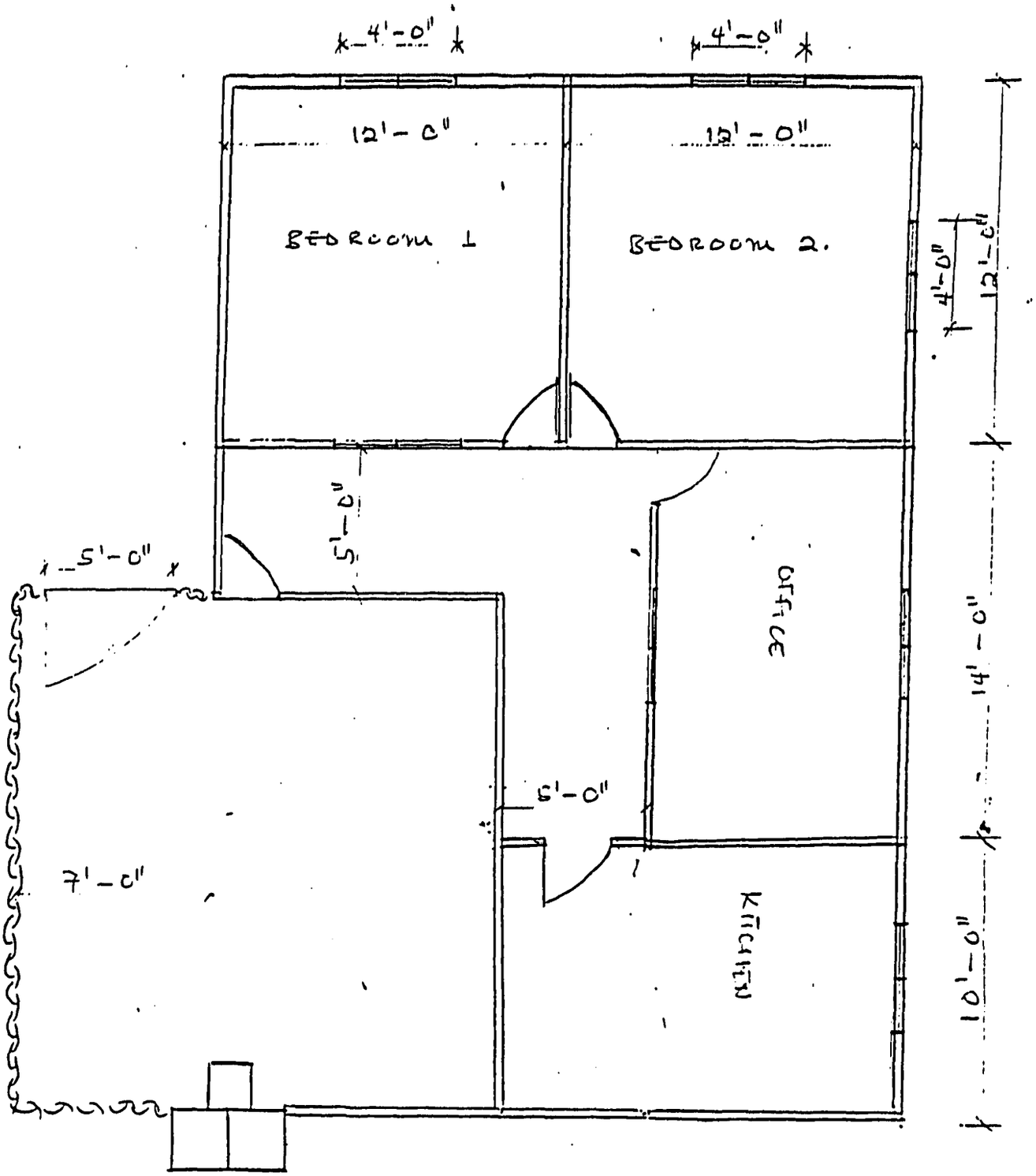
4'-0"
4'-0"
12'-0"
12'-0"
BEDROOM 1
BEDROOM 2.
4'-0"
12'-0"
5'-0"
5'-0"
OFFICE
14'-0"
5'-0"
7'-0"
KITCHEN
10'-0"
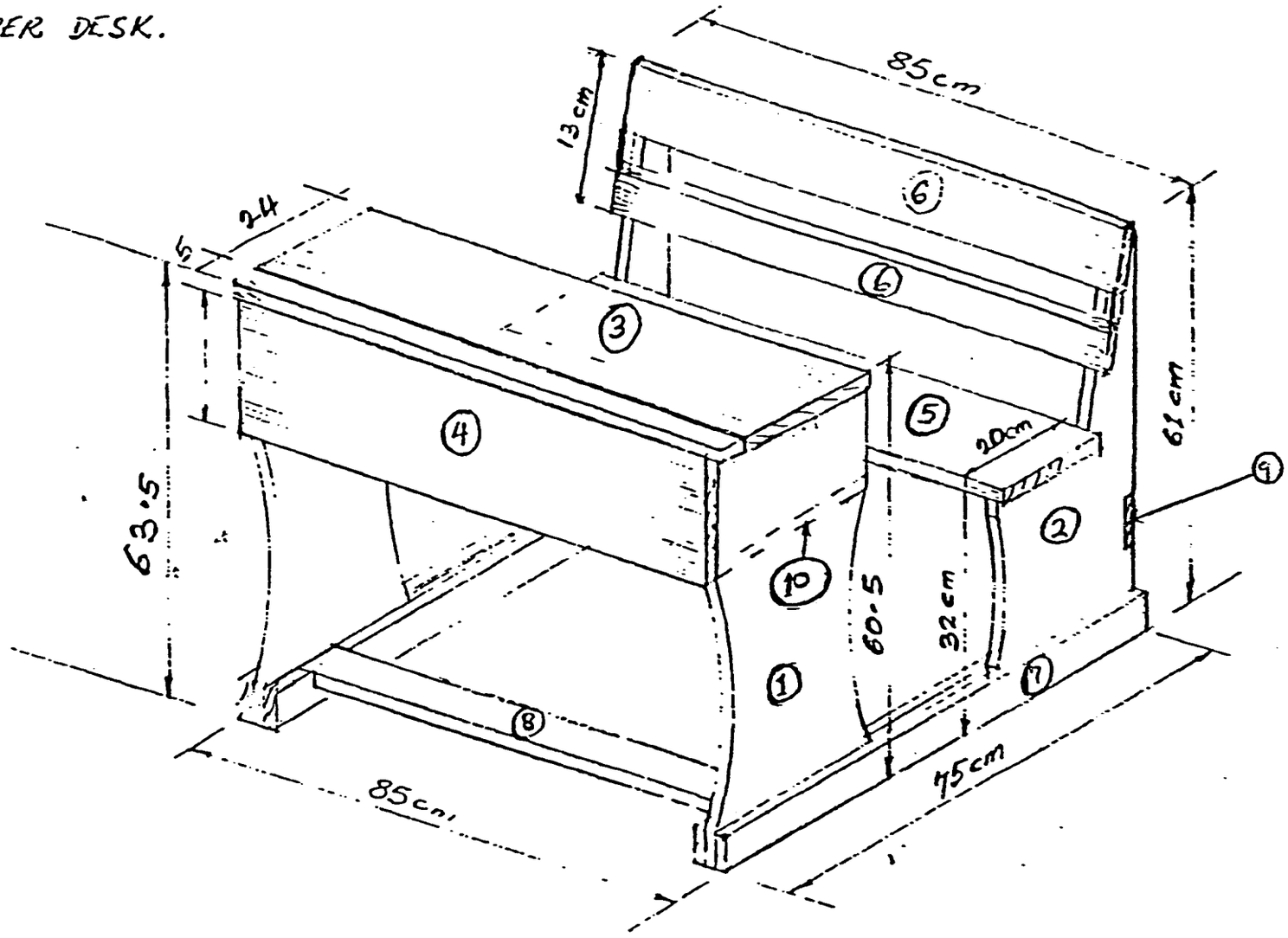
TWO PUPILS PER DESK.