PD-AAA-720

LOCAL DEVELOPMENT II — PROVINCIAL

مشروع التنمية المحلية

LD II-P

FINANCED BY U.S. AGENCY FOR INTERNATIONAL DEVELOPMENT

مصدر التمويل : الوكالة الامريكية للتنمية الدولية

COPY
M. Rafan

METHODOLOGY for PERFORMING a TECHNICAL and ECONOMIC EVALUATION of the LOCAL DEVELOPMENT II/P PILOT WASTEWATER PROJECTS

USAID CONTRACT NO. : 263-0182-C-00-8041-00
PROJECT NO. : 263-0182-3-60054

Prepared By:
Environmental Engineering Section

May 1989

ENV-R-3(E)

Chemonics / 8 El Fawakeh Street / Mohandisseen, Cairo / Tel.: 3602545, 3482247 / Fax: 718986 / Telex: 93037
٨ شارع الفواكه / مهندسين . القاهرة / تليفون : ٣٤٨٢٢٤٧ . ٣٦٠٢٥٤٥ / فاكس : ٧١٨٩٨٦ / تلكس : ٩٣٠٣٧
2000 M St., N.W. / Washington, D.C. 20036 / Tel.: (202) 466-5340 / Fax: (202) 331-8202 / Telex: 440361 CHNC UI

METHODOLOGY for PERFORMING a TECHNICAL and ECONOMIC EVALUATION of the LOCAL DEVELOPMENT II/P PILOT WASTEWATER PROJECTS

Prepared By:
Environmental Engineering Section

May 1989

EXECUTIVE SUMMARY

This report recognizes that Egypt's current problems with sanitary drainage in rural towns and villages can best be addressed by considering the adaptability of affordable wastewater technologies to the sanitary drainage conditions and problems found in rural Egypt.

This report sets out a plan for completing a comprehensive evaluation of technical aspects, economic facets, and project implementation steps associated with the six different wastewater treatment technologies being piloted through 20 individual village scale wastewater projects in five Egyptian Governorates. This evaluation methodology has been designed to identify the following key points:

1. Which of the six technologies being demonstrated are appropriate and realistic for replication.

2. How each pilot wastewater facility actually performs compared to: 1) national effluent requirements (Law 48); 2) equipment warranties; 3) design removal efficiency; and 4) standard levels of performance for identical type facilities operating in other countries.

3. To what extent does the existing shortage of trained sanitary engineers at the governorate level who can adequately plan for, perform design and design reviews, monitor construction and operate wastewater facilities limit design/construction quality and the overall performance of these types of facilities.

4. A development plan which takes into account the cost of replicating on a national level when even the lowest cost technologies piloted will exceed the GOE's present ability to pay for these types of projects in a timely manner and in a way which addresses the growing sanitary drainage problems in rural villages.

5. Practical guidelines for project implementation steps which can be used to replicate the pilot experience for additional villages in each of the rural governorates.

This evaluation methodology takes into account that the choice between alternative village wastewater treatment and disposal technologies cannot be viewed as a purely technical matter. Economic considerations are of paramount importance in rationalizing such choice in order to determine the minimal 'choice set', and to rank-order the technologies within a given village-specific context.

Furthermore, this evaluation methodology highlights the following variables as most crucial in the process of choice of an optimal technology:

(a) the availability of land in the village and at what price;

(b) levels of annual recurrent cost (operating and maintenance), adjusted for inflation;

(c) the level of energy-consumption for the technology, as the future opportunity cost of energy will weigh very heavily on the economies of operation of any given technology;

(d) manpower requirement, in particular, in terms of certain critical skills;

(e) the life-span of any given treatment technology, as various life-spans entail different net present values which affect the process of choice;

(f) the size of population served, since certain technologies are more sensitive than others, for considerations of economies of scale;

(g) the availability and cost of supporting and ancillary services (e.g. water works, roads, electricity towers, etc.); and

(h) the issue of optimal site to minimize initial capital and recurrent O&M costs.

As a complement to this report, a separate study is being carried out for the purpose of identifying financing schemes for village wastewater facility capital and recurrent costs.

b'

TABLE OF CONTENTS

No.		Page
	EXECUTIVE SUMMARY	
1.	INTRODUCTION	1
2.	BACKGROUND AND OBJECTIVES	3
	2.1 Background	3
	2.2 Objectives	4
3.	THE COMPONENT PILOT ACTIVITIES - update of second interim report/status of the pilot activities	5
	3.1 Sanitary Drainage Problem Identification	5
	3.2 Extended Aeration Plants	6
	3.3 Oxidation Ditch	11
	3.4 "Aqualife" treatment process	14
	3.5 Aerated Lagoons	17
	3.6 Waste stabilization ponds	18
	3.7 Primary treatment	20
4.	PROJECT IMPLEMENTATION `STEPS' EVALUATION	21
	4.1 Project Implementation Phases	22
	4.2 Project Implementation `Steps' Evaluation Methodology	22
	4.2.1 Task Analysis	24
	4.2.2 Obstacle Analysis	24
	4.2.3 Role analysis	25
5.	PROJECT `PRODUCT' EVALUATION METHODOLOGY	27
	5.1 Analysis/Comparison of Facilities Performance	27
	5.2 Economic Evaluation Methodology	27
	5.2.1 General considerations	
	5.2.2 Land intensity vs capital intensity	
	5.2.3 Capital cost vs recurrent expenditure	
	5.2.4 Minimum net present value economic solution	
	5.2.5 Analysis of recurrent cost structures	
	5.2.6 Depreciation of fixed assets and structures	
	5.2.7 Inflation accounting	
	5.2.8 Selection of the optimum treatment plant site	
	5.3. Economic comparison; data collection methodology	42

6. REPLICATION ISSUES..... 46

6.1 Project-cycle and cash-flow management..... 46
6.2 Problems of long range planning..... 46
6.3 Determining the choice set..... 46
6.4 Problems of coverage and time-phasing..... 47
6.5 Implications for the local manufacturing sector..... 50

ANNEXES

ANNEX I Status Report for the Pilot Wastewater Facilities

ANNEX II Draft Guideline Procedures for Village Wastewater Project Implementation

ANNEX III Village Wastewater Treatment Facility Unit Process Evaluation Data Forms (example for Extended Aeration treatment process)

ANNEX IV Pilot Village Wastewater Treatment Facility Implementation Costs Worksheets and Summary Tables

ANNEX V Pilot Village Wastewater Treatment Facility Recurrent Costs Worksheets and Summary Tables

ANNEX VI Outline for Final Evaluation Report of the Local Development Pilot Village Wastewater Program

ANNEX VII LD-II/P Environmental Engineering Training Programs planned for 1989-1992

LIST OF TABLES

TABLES		Page
Table 3-1	Extended Aeration Plants; Implementation Status	8
Table 3-2	Oxidation Ditch Plants; Implementation Status	13
Table 3-3	Aqualife Treatment Plants; Implementation Status	16
Table 3-4	Aerated Lagoon Plants; Implementation Status	17
Table 3-5	Waste Stabilization Pond Facilities; Implementation Status	19
Table 3-6	Primary Treatment Plant; Implementation Status	20
Table 4-1	List of Implementation Stages and Steps for Village WW Projects	23
Table 4-2	Summary of Project Implementation Data Analysis Forms which will be used in the Evaluation	26
Table 5-1	Village Wastewater Treatment Facility Process Evaluation Monthly Operating Report	28
Table 5-2	Village Wantewater Treatment Facilities; Comparison of Final Effluent Concentrations	29
Table 5-3	Sampling Schedule for the Extended Aeration Treatment Process	30
Table 5-4	Sampling Schedule for Stabilization Pond Treatment Process	31
Table 5-5	Sampling Schedule for Primary Treatment Process	32
Table 5-6	Sampling Schedule for Oxidation Ditch Treatment Process	33
Table 5-7	Sampling Schedule for 'Aqualife' Treatment Process	34
Table 5-8	Total Cost To Build/Implement Village Wastewater Treatment 'Systems' (data collection logic table)	43
Table 5-9	Total Recurrent Operation and Maintenance Costs for Village Sewerage Systems (data collection logic table)	44

SECTION 1

INTRODUCTION

Egypt's commitment to improving village sanitary drainage conditions and protecting water quality in irrigation canals/drains indicates there is a need to closely evaluate and report the experiences of the Local Development Wastewater Program in selecting, designing, locating, constructing, and operating appropriate technology wastewater treatment systems in Egyptian rural settings which will be useful both to government policy makers as well as rural sanitation implementing personnel. The challenge of providing as many rural communities as possible with the required facilities necessitates finding techniques to achieve these objectives with the resources available to Egypt. This report is intended to address this need.

The recent emergence of wastewater facilities in rural Egypt indicate that wastewater treatment systems are becoming the local solution of choice for Egypt's sanitary drainage problems in highly populated rural villages. Replicating this current development strategy unabated on a national level and at a rate which will meet the growing needs of the community has not taken into account Egypt's strict national policy for effluent requirements (Law 48) coupled with the relative high cost for these waste treatment systems. However, even with the constraints mentioned above, full-scale community sewerage systems remain the solution of choice by Egyptian local community development groups. Meeting the sanitary drainage needs of the worst case, priority Egyptian communities presents itself as a primary concern requiring the determination of the most cost effective mix of sewerage and low cost sanitation.

The solution to this problem lies somewhere between a relaxation or gradual application of law 48 combined with an early focus on replicating only those appropriate treatment systems offering treatment at the lowest cost. The development strategy for each rural Egyptian governorate should include a sanitary drainage master plan which addresses each village's sanitation requirements. The findings from this report will assist in the preparation of these governorate wastewater master plans.

Appropriate technology is being defined as a method or technique that provides a socially and environmentally acceptable level of service or quality of product with full health benefits and at the least economic cost. The operational definition of appropriate technology includes long-run benefits and costs by using life-cycle costing and by paying particular attention to the technical potential for upgrading each alternative as the incomes and aspirations of the users grow over time. (1)

---

(1) Kalbermatten, John M. "Appropriate Sanitation Alternatives - A Technical and Economic Appraisal" (1982)

Section 2 of this report lists the pilot village wastewater facilities which are included in this evaluation and identifies the objectives of the planned evaluation.

Section 3 is an update to the second interim report (March 1988) which discusses the cause of village sanitary drainage problems and addresses the present status of the pilot village wastewater facilities.

Section 4 identifies and discusses a methodology for evaluating the eight major implementation stages and associated steps required to implement village wastewater facilities. A combination of three project implementation process evaluation methods are discussed, i.e., Role Analysis; Task Analysis; and Obstacle Analysis.

Section 5 is a discussion of the evaluation plan for assessing and comparing the socioeconomic factors affecting the choice of an appropriate wastewater treatment technology. Included in this section is a presentation of data collection logic tables which illustrates the process planned for collecting capital cost data, recurrent cost data, and facility performance data.

Section 6 is a discussion of replication issues which will be considered in the final evaluation report.

As a complement to Section 4, Annex II presents draft guideline procedures for each implementation stage/step.

SECTION 2

BACKGROUND AND OBJECTIVES

2.1 Background

The basis of this evaluation methodology report is a review of twenty (20) pilot wastewater facilities installed in several different geographic locations in developed villages located in rural Egypt which were constructed/rehabilitated with USAID financial support.

Village	Technology Type	Geographic Location	Governorate
Meet El Kholy	Extended aeration	Delta	Damietta
Serw	Extended Aeration	Delta	Damietta
Sharabas	Extended Aeration	Delta	Damietta
Kafr El Batikh	Oxidation ditch	Delta	Damietta
Kafr Soliman	Oxidation ditch	Delta	Damietta
Khyata	Oxidation ditch	Delta	Damietta
Rahamna	Oxidation ditch	Delta	Damietta
Kafr El Ghab	Aqualife	Delta	Damietta
Barashiya	Aqualife	Delta	Damietta
Kafr Saad	Aqualife	Delta	Damietta
Kom Akhdar	Aqualife	Delta	Menufiya
Sahel Gawaber	Aqualife	Delta	Menufiya
Daqahla	Aerated lagoon	Delta	Damietta
Aadliya	Stabilization pond	Delta	Damietta
Bolaq	Stabilization pond	Desert	New Valley
Balat	Stabilization pond	Desert	New Valley
Sharm El Sheikh	Stabilization Pond	Desert	South Sinai
Dahab	Stabilization Pond	Desert	South Sinai
Nuweiba	Stabilization Pond	Desert	South Sinai
Zankaloon	Primary treatment	Delta	Sharqiya

2.2 Objectives

The objective of this methodology report is to identify a plan for the evaluation of the local development pilot wastewater program including a working plan for the interpretation of these findings under the context of an Egyptian national program for rural sanitation. The report sets out a methodology for the subsequent identification of:

I. Which of the six technologies being demonstrated are appropriate and realistic for replication in the rural Egyptian village context.

II. How each pilot wastewater facility actually performs compared to: 1) national effluent requirements (law 48); 2) equipment warranties; 3) design removal efficiency; and 4) standard levels of performance for identical type facilities operating in developed countries.

III. To what extent does the existing shortage of trained sanitary engineers at the governorate level who can adequately plan for, perform design and design reviews, supervise the construction, and operate wastewater facilities limit design/construction quality and the overall performance of these types of facilities.

IV. A development plan which takes into account that the cost of replicating on a national level even the lowest cost technologies piloted will exceed the GOE's present ability to pay for these types of projects in a timely manner and in a way which addresses the growing sanitary drainage problems in rural villages.

Furthermore, the objective of the final report is to present working guidelines for completing the eight standard implementation stages (listed below) required to replicate the pilot experience on a village by village basis.

1) Planning for village wastewater projects
2) Engineering study and design
3) Identification of project funds
4) Project design review
5) Contract tender, award, and construction
6) O&M considerations during the construction stage
7) Project commissioning
8) Facility operation

SECTION 3

COMPONENT PILOT ACTIVITIES

This section is an update to the second interim report (ENG-R-39; March 1988). This section discusses the cause of village sanitary drainage problems and addresses the current status of the pilot village wastewater projects. Annex I is a status report (April 1989) for the pilot wastewater facilities.

3.1 Sanitary Drainage Problem Identification

In recent decades, problems of sanitary drainage in many parts of rural Egypt, particularly in populated Delta villages, have reached critical proportions. The severity of the problem is largely due to the compounding of conventional village wastewater disposal problems, themselves magnified in Egypt by the tremendous expansion in water supply facilities (1), with the rise in the subsoil water table, possibly the result of increases in water usage without corresponding increases in drainage capacities.

Health hazards resulting from the sanitary drainage problem are visible. One of the more prominent manifestations is the emergence of stagnant pools in low-lying areas of villages. While the emergence of these pools has been primarily an effect of the rising water table, the threat to public health has been magnified by the contamination of the water with wastewater and by the subsequent use of the pools by villagers for solid waste and sullage disposal. These pools are prime loci for the breeding of insects which spread disease. Groundwater emergence has been noted in houses and schools, not only in open areas of low elevation.

An ever growing problem is the increasing overflow of household and community sewage vaults and cesspits. Most of these sanitary facilities were built without bottoms to allow seepage. However, with the increasing consumption of water and the rising groundwater table, coupled with the insufficiency and costliness of means of vault evacuation, it is altogether common to see sewage overflow from the vaults. Further, the constancy of wastewater addition to the ground within inhabitable areas and the infrequency of evacuation of wastewater vaults and pits, and leaking water mains have created the condition of "perched" groundwater mound under the villages in the Delta where the soil is mostly clay with very low permeability.

---

(1) White, Gilbert F., and Anne U. White, "Potable Water for All : The Egyptian Experience with Rural Water Supply", Water International, 11 (1986): 54-63.

Another problem is the rising groundwater, which undermines foundations and walls of houses through capillary rise of water, a phenomenon affecting mostly, but not exclusively, mud brick houses. This phenomenon has all too frequently led to waste of resources, as when villagers have had to build raised foundations for their homes or to dismantle upper stories to forestall collapse.

The inescapable impact of wastewater is abundantly apparent in the problem of the increasing contamination of canals and drains with sewage and wastewater, while canals and drains are continued to be used by villagers to wash clothes and kitchen utensils.

The sanitary drainage problem then presents itself as a self-amplifying interaction of a number of different factors: soil types, hydrology, topography, infrastructure development, household water consumption, sewage and wastewater disposal practices, and locally available technologies and economics of waste evacuation.

The village wastewater problem has arisen mainly due to the expansion of water supply and the increase in water consumption. Existing household and village disposal technologies are simply unable to cope with the increased volume of wastewater. Potentials for groundwater contamination are greatest where sullage and sewage are combined, because the most common form of the sewage vault is bottomless and designed to permit seepage. The combination of the two wastewater streams increases the frequency with which the vaults need evacuation, imposing a financial burden on village families where such services are available. In many cases, the technology and the supply of evacuation services fall short of meeting the demand. Moreover, even where the sullage and sewage streams are kept separate, there remains the problem of where finally to dispose of the wastewater. Some of the "solutions" have been noted above, i.e., canals, drains, stagnant pools, or any unoccupied area, including the street. The disposal problem may be further aggravated by blockage of drains by solid wastes. In 1982, the GOE, aware of the public health dangers involved in wastewater disposal practices, passed Law 48 which forbade the disposal of untreated wastewater into environmental waters with the aim of protecting the River Nile, but without providing the villagers with an alternative.

3.2 Extended Aeration Plants

Past History

In 1984, Damietta Governorate requested USAID to finance the procurement of equipment for eight extended aeration plants under the DSF Project. This request was given consideration but not funded, under advice of the mechanical engineering staff of USAID/Cairo, for the reason that the plant processes require mechanical and electrical equipment too complicated to be appropriate for the villages of Egypt today. Subsequently, an independent judgment was given by AID/W sanitary engineer who stated that the plants were inappropriate for reasons of their high technology and high O&M costs.

The contract for the construction of the eight extended aeration plants was, therefore, entered into between the Damietta Governorate and a consortium which included the Trans World Consult and Trading Co., the representative of the SOAF Company of France in Egypt, and the Modern Company for Architectural Works, the local contractor. The project was initially financed solely by Damietta Governorate. Sometime after the contract was let on 9 August 1983, the IAC approved the allocation of BVS funds for part of the local currency costs of the project, i.e. for the civil works and erection.

This is a design-build contract following terms of reference prepared by NOPWASD, Cairo. The geo-technical study was made by a consultant to the contractor. The design of the civil works was produced by a structural engineering consultant also hired by the contractor to fit the equipment specifications. The operations building in each site was designed by the contractor based on 150 m2 floor area requirement given by the Governorate.

Construction Status as of March 1989

The contracting office for the project is the Finance Department of the Damietta Governorate. The construction monitoring is provided by the Housing Department with a representative at the sites where the works are in progress. All equipment procured by the Governorate from France has been received and is stored at the site of the concrete batching plant of the contractor or at the sites, the latter when installation is imminent.

There have been delays in the execution of the construction/erection in part due to mitigating circumstances such as the contractor's cash-flow problems and in part to the lack of activities in which both parties to the contract must share responsibilities. The quality of the construction is superior for rural areas of Egypt today. In general, the concreting technique is good. The contractor has his own concrete batching plant and employs two ready-mix trucks and pumpcrete equipment for concreting. This is not usual in most rural settings. Table 3-1 shows the approximate percentage of plant completion in each of the eight villages, as of March 1989 (sewerage systems have been completed in all eight villages). In Meet El Kholy, plant construction is complete. In El Srew, the plant is nearly complete. Plant construction is at the midpoint in Sharabas; in the other five villages, the plants are in the early phases of construction.

Note : As of March 1989, BVS funds expended on the plants amount to approximately 45% of the local currency cost of the eight plants. The foreign currency cost (French francs) borne by the GOE is approximately 50% of the total cost of the plants, the balance being the local currency costs. Therefore, the BVS funds have covered approximately 22% of the total contract cost through March 1989.

TABLE 3-1

EXTENDED AERATION PLANTS: IMPLEMENTATION STATUS

AS OF MARCH 1989

Village	Revised Completion Date	Est. Percent Completion 31/3//89
Meet El Kholy	15 Dec. 1987	1
Serw(+)	15 Dec. 1989	92
Sharabas(+)	15 Feb. 1989	47
El Ghonaimia(+)	15 Apr. 1990	9
Kafr El Arab(+)	15 Jun. 1990	17
El Wastani (+)	15 Jul. 1990	2
Meet Abu Ghaleb (+)	31 Jul. 1990	2
El Roda (+)	2 Aug. 1990	9

(+) The agreement with the original construction contractor was recently terminated. The governorate is now working to replace this contractor so that work can resume on these facilities.

Update of Construction Progress, March 1989

Since March 1987, there was for a while some progress in the work, though minimal, but by the summer of 1987 a total cessation of work at the sites. There were claims and counter-claims from the Contractor and the Governorate, respectively. The Contractor claimed that he was entitled to additional payments due to force majeure and that the Governorate had not made progress payments in timely manner stipulated in the contract. The Governorate claimed liquidated damages for construction delays due entirely to the fault of the Contractor.

In December 1987 a legal consultant was called in by the Governorate to weigh the claims and counter-claims. He concluded that the Contractor could not be totally faulted and he suggested new construction completion schedules. This report was shelved, and the impasse continued. In March 1988, the Governorate and the SOAF representative in Egypt met to agree on arbitration. This did not take place, and the resolution of the impasse is yet to be reached.

In September 1988, the governor of Damietta decided to take legal action against the construction contractor including the withdrawal of work from him and the re-advertising for a replacement contractor to complete the work. Two public sector companies have submitted their tenders for this work. A final decision has not yet been reached by the special governorate committee responsible for resolving this matter. The total amount of money remaining in this project account is reported by the local development department in Damietta to be LE.107,220.00 BVS money.

Plant Operation

Operation of the one extended aeration plant completed to date (Meet El Kholy village) is not without problems due to inadequacies in both design and construction. This plant is undersized for the population served. The flow is, therefore, on this account alone in excess of the plant capacity. The problem was further compounded by the French design engineer's assumption of water consumption in the village to be 55 liters per capita-day when the actual average winter time consumption is 76 liters per capita-day. Additionally, there was a mismatch in the collection system pumping station with the plant headworks. The sewage pumping station in the village is equipped with 40 liters per second pumps; the intake structure of the plant was designed for a peak flow of 9.5 liters per second. This caused the plant's inlet structure to be surcharged.

Error in the civil works design has compromised the aeration efficiency and inadequate provision of sludge drying beds is affecting the operation since sludge wasting cannot be done optimally.

Operation of the Meet El Kholy extended aeration wastewater treatment facility has been arranged with a private Egyptian O&M contractor. The monthly cost of this O&M contract is LE. 2000. The O&M contract includes the following key points:

- The contractor is responsible for all management, maintenance, and operation of the facility.
- The length of the contract is 5-years starting on 1 September 1987.
- The contractor is responsible for paying the costs of all consumables including oil, grease, and chlorine.
- The contractor will pay the electricity costs for site lighting only.
- The contractor will pay the costs of all laboratory tests and supply certificates from "competent authorities". (note: no laboratory tests were specifically identified in the contract)

There is an ongoing problem with this facility's operation in that the O&M contractor claims that the responsibility of removing sludge from the sludge drying beds is the responsibility of the owner. The result is excessive delays in sludge removal from the drying beds (a task which is now being carried out by the village maintenance department) which is limiting the performance/efficiency of the aeration and clarification processes in addition to the percent solids concentration of the dried sludge. This issue, concerning who is responsible for the emptying of the sludge drying beds (the owner or the contractor), seems to have come about from earlier discussions between the two parties during the O&M contract negotiations concerning the reuse/selling of the dried sludge cake to local farmers. At that time the village/markaz negotiating team was overly protective of the issue of who owns the dried sludge in their ambition over possible marketing of this product. Clarification of owner and contractor responsibilities related to this issue are now being facilitated with assistance from the TA contractor.

Chlorination and flow measuring equipment at the Meet El Kholy facility remains to be fully installed and ready for operation. These items were never completed before the construction contractor demobilized due to contract disputes. This impacts the plants overall operation in two major areas;

1) control of unit process can not be optimized without accurate flow data, and 2) final effluent is being discharged un-chlorinated resulting in receiving stream discharge violations of coliform standard. Final installation of these equipment items will be a priority task once the new construction contractor is selected.

The LE 2,000. monthly cost paid to the O&M contractor for the operation of the Meet El Kholy facility is being met by the assessment of individual households within the village. Each household connected to the village sewage collection system pays a monthly fee of LE 1.00. The money is collected from each household through door to door canvassing conducted by a representative of the village executive council. The collected money is sent to the Markaz accounting department. Before the Markaz can issue a check to the O&M contractor the governorate accounting department must first approve the pay request. Payment to the O&M contractor is often 3-months past due.

3.3 Oxidation Ditch Plants

Past History

Damietta governorate requested LE 3,300,000 in 84/85 BVS funds to finance wastewater projects in six villages. Chemonics, the technical assistance contractor to the BVS Project, was asked to select an appropriate treatment technology. Several systems were compared. Waste stabilization ponds were rejected on the grounds that sufficient land could not be made available by the villages. Land treatment methods had to be rejected on account of impermeable soil and the high groundwater levels in the six villages. The oxidation ditch technology was chosen on the grounds of its lower construction costs and in the interest of demonstrating a different technology. The choice was technically endorsed by NOPWASD. The system is one of an intermediate technology.

In November 1987 because of financial constraints to balance the dollar and local currency requirements, the decision was taken by the Governorate to construct oxidation ditch plants in only four of the six villages and to employ the Aqualife treatment system in the other two villages.

Present Status

The governorate retained NOPWASD as the design agency with the thought that it would provide the necessary plans, specifications, and bid documents so as to enable the Governorate to select a construction contractor through the competitive bidding process. NOPWASD provided simply the specifications and concept drawings for a design-build contract.

In the plan review by USAID a question was raised whether the performance criteria could be met economically and without auxiliary units by the plants as given in the concept drawings. Since the die had been cast for the contract to be design-build and accepted by the Governorate, Amendment No. 1 was added to the contract by NOPWASD to give bidders an alternative to design the plants either for intermittent operation or continuous operation. This was further modified in Amendment No. 2. The intermittent operating mode was later dropped as an alternative.

The bid documents were further flawed since they violated USAID commodity procurement guidelines. To rectify this, provisions were included in Amendment No. 2 to separate out the commodity procurement under a separate contract from the construction/erection contract for the plants. The tendering process for the local contracting was placed in the hands of the Finance Department of the Governorate. The equipment required for the oxidation ditch plants were procured under an AID-direct contract from a U.S. supplier. The contract for the civil works of the four oxidation ditch plants was signed on 18 January 1988.

Since the design of the four oxidation ditch plants was procured under the design-build contract, there was a plan review of the plans produced by the contractor. The construction monitoring of the project is being provided primarily by the staff of the Housing Department of the Governorate with technical assistance provided by the engineering staff of the LD II project.

TABLE 3-2

OXIDATION DITCH PLANTS: IMPLEMENTATION STATUS

AS OF MARCH 1989

(WASTEWATER TREATMENT PLANT)

Village	% Completion	Estimated Completion Date
El-Rahamna	60 %	1/3/1990
Kafr Soliman	65 %	1/3/1990
Kafr El Battiakh	10 %	1/3/1990
El-Khayata	5 %	1/6/1990

(SEWAGE COLLECTION SYSTEM)

Village	% Completion	Estimated Completion Date
El-Rahamna	100 %	
Kafr Soliman	100 %	
Kafr El Battiakh	90 %	1/12/1989
El-Khayata	100 %	

3.4 Aqualife Process

Past History

The Aqualife process may be classified as one of low technology. It is unique in that it is recorded to have a very high efficiency for oxygen transfer (thus low operating cost) and in that its only power-driven component is a pump (thus low maintenance cost). It has been shown to produce excellent results in Europe.

Funding for three projects which will demonstrate the Aqualife process originated in a USAID/Chemonics proposal to demonstrate innovative technologies in six Delta villages (three in Damietta, and three in Menufiya). Three treatment technologies were selected - a communal composting plant,(+) waste stabilization ponds, and a modified, mechanically aerated version of the aerated lagoon technology.(++) Subsequently, Chemonics and USAID engineers became aware of the Aqualife technology and proposed its use in three of the six pilot projects.

The Menufiya Governorate judged the Aqualife process to be a good choice because it was seen as being cost-effective and requires a relatively small land area. This combination was very appealing. In Damietta Governorate an existing, unused irrigation ditch made the installation of the units exceedingly advantageous because this entailed minimal civil work. The LD II Rural Committee approved the funding for the three projects in December 1986.

(+) The communal composting plant project was dropped because the Menufiya governorate could not bring about an agreement on the technology within the community.

(++) See Preliminary Designs for Pilot Wastewater/Drainage Projects in Six Delta Villages Master Report (Chemonics/Cairo), September 1985.

Present Status

Since the Aqualife equipment is unique and only available from a single firm in the U.S, the route of sole source waiver was taken and AID-direct contract was entered into by USAID with AMI International of Pittsburgh, PA. The contract included the supply of the units, their delivery and erection, and civil works by an Egyptian subcontractor. Operator orientation was also included. The civil work design for the villages was reviewed by USAID. The installation was to have been completed in six months from the effective date of the contract. The installation of the equipment and the civil works, however, could not be completed within the original contract period because of circumstances beyond the control of the contractor. Electricity and water, which were the owner's responsibility to provide, were not supplied to the contractor in a timely manner, and in Menufiya the construction sites were not turned over to the contractor free and clear until the farmers were able to harvest their crops from the sites and access roads, also the owner's responsibility, were not graded. The construction monitoring responsibility was shared by the governorate's Housing Department engineering staff and the technical assistance engineering personnel under the guidance of the USAID engineer.

Two other villages in Damietta governorate, Kafr Saad El Balad village and Barashiya village, are now installing Aqualife units. These village wastewater treatment facilities include a modification in the design of the plants to include primary basins, the Aqualife aeration basins, and sludge drying beds. This was designed so that these plants can receive higher loadings.

TABLE 3-3

AQUALIFE TREATMENT UNITS: IMPLEMENTATION STATUS

AS OF MARCH 1989

(WASTEWATER TREATMENT PLANT)

Village	% Completion	Estimated Completion Date
Sahel El Gawaber	100 %	
El-Kom El Akhdar	100 %	
Kafr El Ghab	100 %	
Kafr Saad El Balad	40 %	1/01/1990
Barashiya	50 %	1/01/1990

(SEWAGE COLLECTION SYSTEM)

Village	% Completion	Estimated Completion Date
Sahel El Gawaber	90 %	1/07/1989
El-Kom El Akhdar	100 %	
Kafr El Ghab	85 %	1/08/1989
Kafr Saad El Balad	80 %	1/12/1989
Barashiya	100 %	

3.5 Aerated Lagoon

Past History

This is a low technology process which is being built in one village in Damietta Governorate (Daqahla). Mechanical aeration assists the natural process of photosynthetic oxygenation. This enables reduction in land requirements.

The process design was studied by Chemonics as part of the six-village demonstration effort and a report detailing the requirements was prepared.(+)

Present Status

Chemonics prepared the Terms of Reference with which the Governorate advertised for a design-build contract. They, as for other projects, underwent plan review by the governorate Housing Department with assistance by USAID-Chemonics engineering group.

Special horizontal aerators have been imported from a U.S. supplier under AID-direct contract with sole source waiver.

The construction monitoring is primarily being completed by the Governorate Housing Department staff. They are being assisted by Chemonics technical assistance engineering personnel.

TABLE 3-4

AERATED LAGOONS: IMPLEMENTATION STATUS

AS OF MARCH 1989

(WASTEWATER TREATMENT PLANT)

Village	% Completion	Estimated Completion Date
Daqahla	60 %	1/7/1989

(SEWAGE COLLECTION SYSTEM)

Village	% Completion	Estimated Completion Date
Daqahla	75 %	1/7/1989

(+) See Preliminary Designs, op.cit.

3.6 Waste Stabilization Pond

Past History

This is the simplest of the technologies being employed in the pilot wastewater plant projects, but has the disadvantage of a relatively large land requirement. This technology is now being demonstrated in seven localities. Three communities in South Sinai are being included in the evaluation of the demonstration projects; they were not an original part of the pilot program. The South Sinai facilities were constructed by Israel during the period of 1967-1974. These facilities are now being rehabilitated through assistance from USAID.

Present Status

For the Aadliya village facility, Terms of Reference for the stabilization pond project were prepared by Chemonics which were used by Damietta Governorate to advertise for a design-build contract. The design details required were minimal; nevertheless, they were reviewed by the governorate Housing Department with the assistance of the USAID-Chemonics engineering group.

The rehabilitation and extension of wastewater services in the four Gulf of Aquaba cities: Sharm El Sheikh, Dahab, Nuweiba and Taba are being funded by USAID and the GOE. The engineering study was completed by the firm of Dr. Ahmed Abdel Warith which is also supplying services as the construction manager for the governorate. The construction is being undertaken by the consortium, CARE-Engineering Markets. The work at Taba was postponed following a decision to do a master plan for the development of the greater Taba area. A new plant is being built in Nuweiba, an old plant is being rehabilitated in Dahab, a new plant in the Bedouin area in Dahab, a new plant in Ras Nasrani and an addition to the existing plant is being constructed at Sharm El Sheikh.

The design and contract specifications are now complete for the two stabilization pond facilities in New Valley governorate. The Terms of Reference for selecting a consultant to perform the design work were prepared by the New Valley Governorate Housing Department. The Markaz associated with each facility is now tendering for construction.

These facilities do not require any import of equipment. In Aadliya village the community purchased the treatment site as part of its contribution to the project. The Governorate Housing Department prepared the bill of quantities for the sewer network. The construction monitoring is primarily the responsibility of the Governorate Housing Department staff which is being assisted by Chemonics.

New Valley Governorate paid for design services for the design of four village stabilization pond facilities using funds (LE 48,000) from the LD II/P first year allocation. New Valley is now constructing two stabilization pond facilities using funds from the LD II/P second year allocation. Construction supervision is being provided by an outside consultant selected by the New Valley Governorate.

TABLE 3-5

STABILIZATION PONDS: IMPLEMENTATION STATUS

AS OF MARCH 1989

(WASTEWATER TREATMENT PLANT)

Village	% Completion	Estimated Completion Date
Aadliya	20 %	1/12/1989
Bolaq	design complete	1/05/1990
Balat	design complete	1/05/1990
Sharm El Sheikh(+)		
Dahab (+)		
Nuweiba (+)		

(SEWAGE COLLECTION SYSTEM)

Village	% Completion	Estimated Completion Date
Aadliya	20 %	1/12/1989
Bolaq	design complete	1/05/1990
Balat	design complete	1/05/1990
Sharm El Sheikh(+)		
Dahab(+)		
Nuweiba(+)		

Note: (+) Rehabilitation/Expansion project

3.7 Primary Treatment

Past History

The design of the wastewater treatment plant for the village of Zankaloon was undertaken by an engineer in the Housing Department of Sharqiya Governorate, based on the Chemonics' technical analysis of the village's wastewater problem. The need was perceived by the villagers and substantial contribution was made by them as their share in the cost of the construction of the wastewater collection and treatment system.

The governorate received an allocation from BVS funds partially sufficient to construct the main wastewater collection system, pumping station, force main, and the primary treatment. Additional funds have been requested from LD II project.

The design was reviewed by the USAID engineer and suggestions were made for its improvement. In the review the secondary treatment design was found inadequate. The phasing of the construction was, therefore, planned with the secondary treatment component to be built at a future time.

Present Status

The contracting process was handled entirely by Sharqiya Governorate. The construction work was monitored by the Housing Department engineers with assistance from a Chemonics engineer. The quality of construction to date has been poor. A special report was sent to the governorate from the TA contractor which outlined areas requiring improvement. The governorate is now addressing these construction problems with assistance from the TA contractor.

TABLE 3-6

PRIMARY TREATMENT FACILITY: IMPLEMENTATION STATUS AS OF MARCH 1989

(WASTEWATER TREATMENT PLANT)

Village	% Completion	Estimated Completion Date
Zankaloon	70 %	1/1/1990

(WASTEWATER COLLECTION SYSTEM)

Village	% Completion	Estimated Completion Date
Zankaloon	50 %	1/12/1989

SECTION FOUR

PROJECT IMPLEMENTATION 'STEPS' EVALUATION

In order to meet the educational purpose of this evaluation, i.e., to provide guidance for future investment decisions, this evaluation will identify and measure the major factors and obstacles affecting village wastewater project implementation. The final analysis and determinations regarding the appropriateness of the pilot wastewater technologies will be through a synthesis of these 'process' variables with project technical (product) variables. This 'process' evaluation will look at each individual step in the project implementation procedure for the purpose of identifying and understanding the issues which now, or in the future, may affect the efficiency of village wastewater project implementation. The identification of key issues and constraints will allow for the subsequent streamlining of the implementation procedure with the realization of better quality projects completed in a more organized and efficient manner in the future. Problems and issues identified during the implementation of the village pilot wastewater projects will be discussed and examined as a part of this evaluation with a focus on developing better project implementation procedures and coordination at the governorate level for these types of projects.

Village wastewater projects, like any general civil engineering works, progress through various defined stages as they move from conception to completion. These stages involve a series of interactions between the client and his appointed engineer. In the final evaluation report each of the below listed implementation stages and associated steps will be evaluated individually along with a presentation of definitive guideline procedures to follow for the implementation of future village wastewater projects. A draft discussion of the guideline procedures for each implementation stage/step is presented in Annex-II.

<u>Village Wastewater Project Implementation Steps</u>

Stage One:	Planning for Village Wastewater Projects
Stage Two:	Engineering Study and Design
Stage Three:	Identification of Project Funds
Stage Four:	Project Design Review
Stage Five:	Contract Tender, Award, and Construction
Stage Six:	O&M Considerations During the Construction Phase
Stage Seven:	Project Commissioning
Stag Eight:	Facility Operation

4.1 Project Implementation Phases

Each of the above listed steps or stages, in the life span of a project, has its own particular significance and the successful completion of each is a stepping stone to the overall success of the project. In the case of project conception and planning, the ideas and general scope of the project are formulated by the client and discussed with his engineer. At this early stage of the project the client knows what he wants, in general terms, of his proposed project. The next stage, i.e. feasibility and preliminary design, allows the client to choose from the various options presented by his engineer. These are important first steps which impact the projects overall effectiveness and final cost. The third stage in the implementation process is the preparation of the project's final design. The final three stages in the implementation process can be grouped together in that tendering/construction, commissioning, and operation have been preordained by the preceding processes. In other words the nature of the end product has already been established and whilst strict control must be observed during each of these final stages there is virtually no rescindment. Barring any major alterations in the client's requirements or financial crisis the project should move toward completion without delay.

Thus from the above descriptions three distinct phases can be identified. Firstly, there is the overall conception and choice contained in the earlier two stages where the client interacts closely with the engineer and establishes what he wants and sets the project on the correct course. The last phase consists of the activities to set everything in motion towards completion of the works. The remaining in-between phase is one of the preparation of detailed design. In this phase the engineer takes the approved preliminary work and concepts from the feasibility study and using his engineering skills creates the project, on paper, which his client will ultimately receive as hardware.

4.2 Project Implementation `Steps' Evaluation Methodology

The monitoring of village wastewater project implementation stages and steps is undertaken for a number of purposes. It has been shown that a large proportion of projects that fail to show impacts are really failures to deliver the interventions in ways specified. It is also possible that some wastewater project implementation procedures that do show positive impact results should not be replicated or expanded because the improvement or success of the completed step may be related to the implementation of a product other than the one specified. Additionally, research on project implementation steps is valuable in determining the levels of performance for each function group involved and in identifying where training interventions can be best focused. Table 4-1 is a master list of wastewater project implementation stages and associated steps.

Table: 4-1

VILLAGE WASTEWATER PROJECT IMPLEMENTATION STAGES/STEPS

STAGE ONE	STAGE TWO	STAGE THREE	STAGE FOUR
Planning Stage	Feasibility Study and Preliminary Design Stage	Development of Financing Plan Stage	Project Design Review and Final Design Stage
1. Needs identification 2. Needs assesment 3. Identify and approve funds for the feasibility study	1. Prepare RFP for feasibility study 2. Advertise for consultant to perform feasibility study 3. Review/Select consultant to perform feasibility study 4. Prepare feasibility study 5. Review of completed feasibility study	1. Develop a financing plan using community raised funds, Bab-III funds, and Grant funds 2. Collect local funds 3. Aquisition of funds for the treatment plant and pumping station(s) based on the locations identified in the feasibility study 4. Secure funds for phase(s) of implementation from different sources	1. Review preliminary design 2. Prepare final design 3. Review final design

STAGE FIVE	STAGE SIX	STAGE SEVEN	STAGE EIGHT
Contract Tender, Award, and Construction Stage	O&M Considerations During the construction Stage	Project Commissioning Stage	Facility Operations Stage
1. Prepare tender documents 2. Prequalifications activities 3. Advertise for a construction contractor 4. Prepare contract addendum 5. Collect bid documents 6. Evaluate bid documents 7. Select contractor 8. Sign contract 9. Begin construction 10. perform construction supervision	1. Identify staffing requirements 2. Prepare/collect permits, sewer use rules and regulations 3. Prepare septage receiving plan 4. Prepare operations budget 5. Prepare process data logs and record forms 6. Prepare laboratory analysis program 7. Prepare preventative maintenance program 8. Begin staff training program 9. Prepare facility information center	1. Equipment acceptance testing 2. Process acceptance testing 3. Preparation of deficiency and omissions report 4. Correction of items listed in the deficiency and omissions report 5. Facility final acceptance 6. Agreement on the beginning date of the warranty period 7. Facility start-up training 8. Actual facility startup 9. Construction contractor startup operation period 10. Beginning of owner operation of facility	1. Set effluent standards for receiving streams 2. Enforce Law 48 3. Sampling and analysis program to support the enforcement of Law 48 4. Coordinate pollution control activities among other governorates and national departments 5. Perform daily operation of the wastewater facility 6. Perform routine simple maintenance of the facility equipment, 7. Perform complicated maintenance of the facility equipment 8. Perform routine process control sampling and analysis

A combination of three project implementation process evaluation methods will be employed to adequately assess the various implementation phases and steps associated with the pilot wastewater projects, i.e., Role analysis; Task analysis; and Obstacle analysis. Again, this activity is focused on identifying the best set of implementation steps to use in completing future village wastewater projects.

4.2.1 Task Analysis

Monitoring project implementation tasks, or steps, serves to identify the following key points:

a. Which steps are now being completed on time, within budget, according to contractual and legal requirements, and with a quality product.

b. Which steps are not now being completed on time, within budget, according to contractual and legal requirements, and with a quality product.

c. Which step should precede another step.

d. Which steps can be combined or completed concurrently.

e. Which steps can be deleted completely.

In general, the task analysis allows the identification of obstacles or problems encountered in completing the implementation steps. Obstacles identified will be flagged and analyzed in a separate obstacle analysis activity. Table 4-2 shows the data form headings which will be used to collect task analysis data.

4.2.2 Obstacle Analysis

Analysis of obstacles encountered in completing the project implementation steps serve to identify the following key points:

a. For each implementation step, if an obstacle was encountered, which obstacle category is affected.

b. For each obstacle identified, what was the cause of the problem and which function group was involved.

c. For each obstacle identified, what action was taken (and by who) to remedy the problem.

Identifying recurring obstacles for a given implementation step helps to show the trend of which areas of the implementation process are trouble spots, actions taken to remedy the problem, and which function group was involved. The latter is further identified in the Role analysis activity. Table 4-2 shows the data form headings which will be used to collect obstacle analysis data.

4.2.3 Role Analysis

Analysis of the different function groups which had responsibility for a given step's completion, combined with the obstacles encountered in completing the project implementation steps, serve to identify the following key points:

a. For a given step, which function group had responsibility (or a portion of the responsibility) for its completion.

b. If an obstacle was encountered in completing a step, which function group(s) were involved.

c. From the realm of data for a single step, which function group is repeatedly identified as the responsible group for obstacles encountered.

d. For the series of steps in the implementation process, which function group is repeatedly identified as the responsible group for obstacles encountered.

The relationship between obstacles encountered and function groups will be further synthesized to determine the choice set of implementation steps and levels of responsibility. Table 4-2 shows the data form headings which will be used to collect role analysis data.

Table 4-2

VILLAGE WASTEWATER PROJECT
IMPLEMENTATION PROCESS EVALUATION
Summary of Data Analysis Forms which will be used in the evaluation

Identification of: Steps/Role/Obstacle/Cost/Timing/Product (data form headings)

Stage: _____ (list steps below)	Group who completed this step	Obstacles Encountered	Start Date/ End Date (Duration)	Costs		Product
				Direct	Indirect	

Task Analysis (data form headings)

Stage: _____ (list steps below)	Completed By	Assesment/Grade of Product Produced in this Step				Remarks
		Technical Aspects		Quantitative Aspects		
		Quality	Contractual vs Regulations	Time	Finance	

Obstacle Analysis (data form headings)

Stage: _____ (list steps below)	Type of Obstacle				Obstacle Definition		Action Taken, and by who, to remedy the problem
	Product Quality	Contractual vs Regulations	Timing	Finance	Cause of the Problem	Function Group Responsible	

Role Analysis (data form headings)

Stage: _____ (list steps below)	Function Group Involved in Completing the Step								
	Village	Markaz	ORDEV	Chemonics	USAID	Governorate Housing Department	Design Engineer	Construction Contractor	National Authority

SECTION FIVE

PROJECT 'PRODUCT' EVALUATION METHODOLOGY

This section is a presentation of the methodology or plan which will be followed for collecting product data associated with each pilot village wastewater facility being demonstrated along with a further discussion on how this data will be used in the evaluation.

5.1 Analysis/Comparison of Facility Performance (Evaluation Criteria)

The purpose of this data collection effort is to; (1) quantify each facility's individual performance based on design expectations, and (2) allow for the subsequent comparison between the different technologies being demonstrated. This data collection effort will be linked with the wastewater facility O&M training activity (task e2.) in order to perpetuate facility performance monitoring by O&M technicians as a routine part of operations. Wastewater sample analysis will be completed in the Chemonics Cairo office laboratory.

On the following pages are two data summary tables which summarize the data collection methodology which will be used in this investigation. Table 5-1 is a typical process evaluation monthly report form for a village wastewater treatment facility. Data included on this form is the output of daily/weekly facility process measurements. Table 5-2 is a summary table for comparing each pilot village wastewater facility's final effluent.

Tables 5-3 through 5-7 are the sampling schedules for each pilot wastewater technology.

Included in Annex III is a example of the wastewater unit process evaluation data collection form(s) which will be used in assessing each facility's unit process performance. The forms presented in Annex III are for the Extended Aeration treatment process. Similar forms will be tailored for each wastewater facility being evaluated.

File:WWTP1

Table 5-1

FACILITY NAME: _____

VILLAGE WASTEWATER TREATMENT FACILITY
PROCESS EVALUATION
MONTHLY OPERATING REPORT

MONTHLY RECORD _____19 ____

				RAW WASTEWATER						FINAL EFFLUENT					AERATION SYSTEM								
DATE	DAY	WEATHER	FLOW -M3/H	TEMP	pH	SETT. SOLIDS	B.O.D. I/week	SUSP. SOLIDS	B.O.	pH	B.O.D. I/week	SUSP. SOLIDS I/week	B.O.	CL2 RES.	SUSP. SOLIDS	% SOLIDS	30 MIN. SETT.	S.V.I.	B.O.	RETURN SS	RETURN M3/DAY	WASTE M3/DAY	WASTE Kg/day
		MAXIMUM																					
		MINIMUM																					
		AVERAGE																					

FLOW METER
Last: _____
First: _____
Total: _____ M3/Month

ELECTRIC METER
Last: _____
First: _____
Total: ____
Mult. ____X ____ = _____ KWH

WASTE SLUDGE
To sludge silos: _____M3
To sludge drying beds: _____M3
CU. Metres cake removed: _____

% REMOVAL (INF - EFF)
BOD: _____
S.S.: _____

COMMENTS

Table: 5-2

VILLAGE PILOT WASTEWATER TREATMENT FACILITIES
COMPARISON OF FINAL EFFLUENT CONCENTRATIONS

Treatment Technology Type/ Facility Name	Facility Design Effluent Standards		Actual Effluent Concentrations		Actual Effluent Concentrations Compared to Law 48 Effluent Standards		Actual Effluent Concentrations Percent removal of Influent	
	BOD	SS	BOD	SS	BOD (60)	SS (60)	BOD	SS
Extended Aeration								
Serw								
Meet El Kholy								
Sharabas								
Aqualife Treatment Process								
Kafr El Ghab								
Barashiya								
Kafr Saad								
Kom Akhdar								
Shael Gawaber								
Oxidation Ditch								
Kafr El Batikh								
Kafr Soliman								
Khyata								
Kahamna								
Stabilization Pond								
Nadliya								
Bolaq								
Balat								
Sharm El Sheikh								
Dahab								
Neweiba								
Taba								
Aerated Lagoon								
Daqahla								
Primary Treatment								
Zamalkoon								

Table 5-3

PILOT VILLAGE WASTEWATER FACILITY
PROCESS SAMPLING SCHEDULE
(EXTENDED AERATION TREATMENT PROCESS

PROCESS FLOW PATH AND SAMPLING SITES

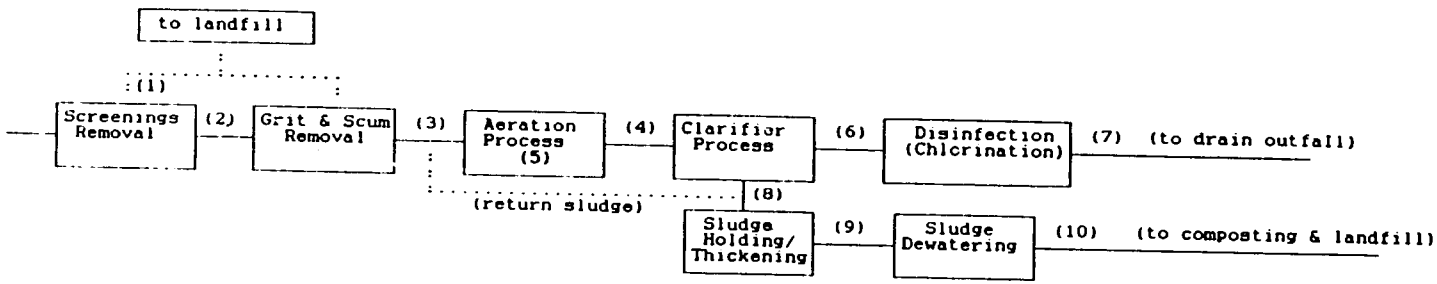

Sample Site	Frequency	Sample Type	Analysis
(1)	Daily	24 hr. comp.	Volume of screenings
(2)	Daily	24 hr. comp.	BOD
	Daily	24 hr. comp.	SS
	Daily	24 hr. comp.	VSS
	Daily	2/day	Settleable Matter
	Daily	2/day	pH
	Daily	2/day	DO
	Daily	2/day	Temperature
(3)	1/week	24 hr. comp.	SS
	1/week	24 hr. comp.	VSS
	Daily	Grab	Temperature
	2/day	Grab	Settleable Matter
(4)	2/day	Grab	DO
	2/day	Grab	pH
	2/day	Grab	Temperature
	1/week	Grab	MLSS
	1/week	Grab	MLVSS
	2/day	Grab	MLSS (centrifuge)
	2/day	Grab	MLSS Settleometer

Sample Site	Frequency	Sample Type	Analysis
(5)	2/day	Grab	DO
	2/day	Grab	OUR
(6)	1/week	24 hr. comp.	SS
(7)	1/week	24 hr. comp.	BOD
	1/week	24 hr. comp.	SS
	1/week	Grab	Coliform (total)
	2/day	Grab	DO
	2/day	Grab	pH
	2/day	Grab	Chlorine Residual
			Flow
(8)	2/day	Grab	DO
	1/week	Grab	SS
			Flow (volume)
(9)	(During each sludge pour)	Grab	Total Solids
		Grab	% solids
			Flow (volume)
(10)	After 30 days	Grab	Total Solids
		Grab	% Solids

Table 5-4

PILOT VILLAGE WASTEWATER FACILITY
PROCESS SAMPLING SCHEDULE
(STABILIZATION POND TREATMENT PROCESS)

PROCESS FLOW PATH AND SAMPLING SITES

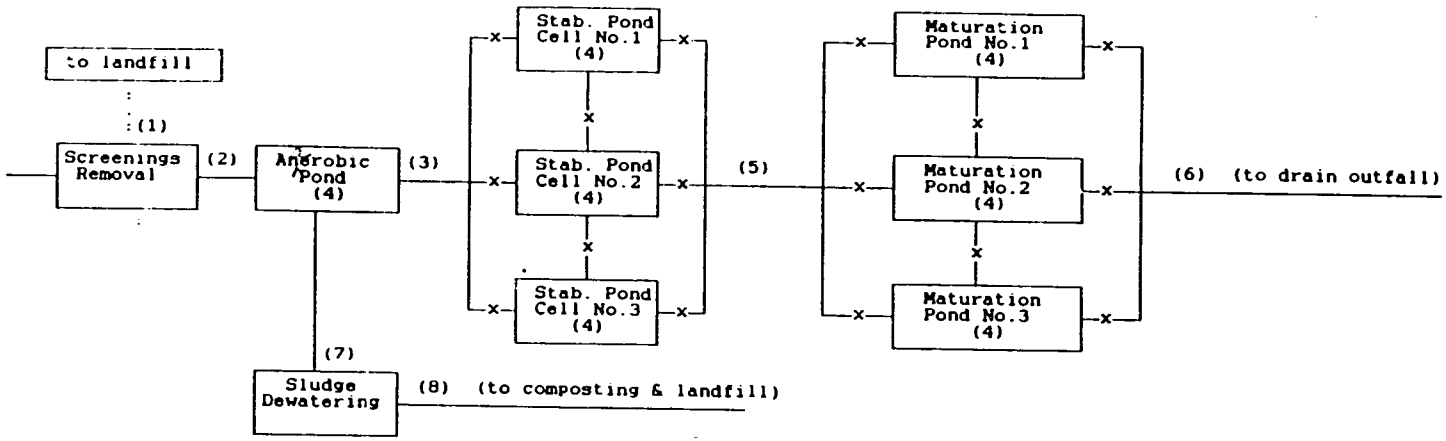

Sample Site	Frequency	Sample Type	Analysis
(1)	Daily	24 hr. comp.	Volume of screenings
(2)	1/week 1/week 1/week 2/day 2/day 2/day 2/day	24 hr. comp. 24 hr. comp. 24 hr. comp. Grab Grab Grab Grab	BOD SS VSS Settleable Matter pH DO Temperature
(3)	1/week 1/week 1/week 2/day	24 hr comp. 24 hr comp. 24 hr. comp. Grab	SS VSS BOD DO
(4)	2/day 2/day 2/day 2/day 1/month	Grab Grab Grab Grab Grab	DO pH Temperature Liquid Level Sludge Level
(5)	1/week 1/week 1/week 2/day	24 hr comp. 24 hr comp. 24 hr. comp. Grab	SS VSS BOD DO

Sample Site	Frequency	Sample Type	Analysis
(6)	1/week 1/week 1/week 2/day 2/day 2/day	24 hr. comp. 24 hr. comp Grab Grab Grab Grab	BOD SS Coliform (total) DO pH Chlorine Residual Flow
(7)	During each sludge pour	Grab Grab	Total Solids % solids Flow (volume)
(8)	After 30 days drying	Grab Grab	Total Solids % Solids

Table 5-5

PILOT VILLAGE WASTEWATER FACILITY
PROCESS SAMPLING SCHEDULE
(PRIMARY TREATMENT PROCESS)

PROCESS FLOW PATH AND SAMPLING SITES

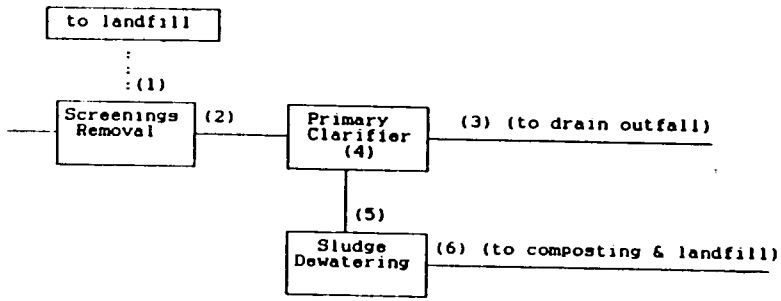

Sample Site	Frequency	Sample Type	Analysis
(1)	Daily	24 hr. comp.	Volume of screenings
(2)	Daily Daily Daily Daily Daily Daily Daily	24 hr. comp. 24 hr. comp. 24 hr. comp. 2/day 2/day 2/day 2/day	BOD SS VSS Settleable Matter pH DO Temperature
(3)	1/week 1/week 1/week Daily Daily Daily	24 hr. comp. 24 hr. comp. Grab Grab Grab	BOD SS Coliform (total) DO pH Flow
(4)	Daily Daily Daily Daily	Grab Grab Grab Grab	DO pH Sludge level Temperature
(4)	Daily	Grab	DO

Sample Site	Frequency	Sample Type	Analysis
(5)	1/week 1/week Daily	Grab Grab	Total Solids % solids Flow (volume)
(6)	After 30 days drying	Grab Grab	Total Solids % Solids

Table 5-6

PILOT VILLAGE WASTEWATER FACILITY
PROCESS SAMPLING SCHEDULE
(OXIDATION DITCH TREATMENT PROCESS)

PROCESS FLOW PATH AND SAMPLING SITES

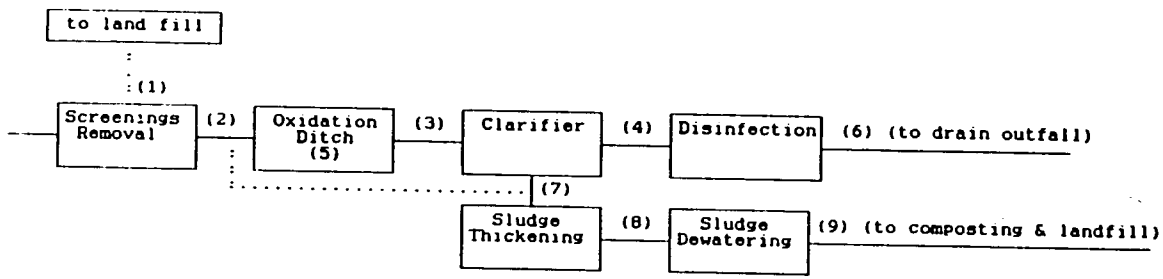

Sample Site	Frequency	Sample Type	Analysis
(1)	Daily	24 hr. comp.	Volume of screenings
(2)	1/week	24 hr. comp.	BOD
	1/week	24 hr. comp.	SS
	1/week	24 hr. comp.	VSS
	2/day	Grab	Settleable Matter
	2/day	Grab	pH
	2/day	Grab	DO
	2/day	Grab	Temperature
(3)	2/day	Grab	DO
	2/day	Grab	pH
	2/day	Grab	Temperature
	1/week	Grab	MLSS
	1/week	Grab	MLVSS
	1/week	Grab	MLSS (centrifuge)
	2/day	Grab	MLSS Settleometer
(4)	2/day	Grab	DO
	2/day	Grab	Temperature
	1/week	24 hr. comp.	SS

Sample Site	Frequency	Sample Type	Analysis
(5)	2/day	Grab	DO
	2/day	Grab	OUR
	2/day	Grab	Water Level
	1/month	Grab	Sludge Level
(6)	1/week	24 hr. comp.	BOD
	1/week	24 hr. comp.	SS
	1/week	Grab	Coliform (total)
	2/day	Grab	DO
	2/day	Grab	pH
	2/day	Grab	Chlorine Residual
			Flow
(7)	2/day	Grab	DO
	1/week	Grab	SS
	2/day	Grab	% solids (spin)
(8)	(during each sludge pour)	Grab	Total Solids
		Grab	% solids
			Flow (volume)
(9)	After 30 days	Grab	Total Solids
		Grab	% Solids

Table 5-7

PILOT VILLAGE WASTEWATER FACILITY
PROCESS SAMPLING SCHEDULE
(AQUALIFE TREATMENT PROCESS)

PROCESS FLOW PATH AND SAMPLING SITES

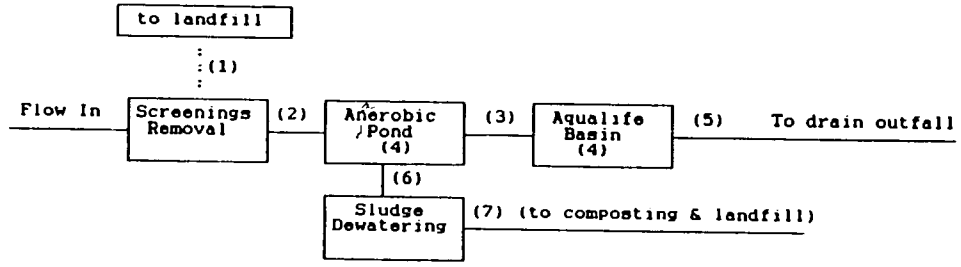

Sample Site	Frequency	Sample Type	Analysis
(1)	Daily	24 hr. comp.	Volume of screenings
(2)	1/Week 1/Week 1/Week 2/day 2/day 2/day 2/day	24 hr. comp. 24 hr. comp. 24 hr. comp. Grab Grab Grab Grab	BOD SS VSS Settleable Matter pH DO Temperature
(3)	1/week 1/week 1/week 2/day	24 hr. comp. 24 hr. comp. 24 hr. comp. Grab	SS VSS BOD DO
(4)	2/day 2/day 2/day 2/day 1/month	Grab Grab Grab Grab	DO pH Temperature Liquid level Sludge Level

Sample Site	Frequency	Sample Type	Analysis
(5)	1/week 1/week 1/week 2/day 2/day	24 hr. comp. 24 hr. comp. Grab Grab Grab	BOD SS Coliform (total) DO pH Flow
(6)	(Take sample during each sludge pour)	Grab Grab	Total Solids % solids Flow (volume)
(7)	(After 30 days drying)	Grab Grab	Total Solids % Solids

5.2 Economic Evaluation Methodology

Following is a discussion of the methodology planned for evaluating the economic factors affecting the choice of an 'appropriate wastewater treatment technology' in rural Egyptian villages. Since there are many options open to rural sanitation planners in Egypt, the available technologies for sewage treatment and disposable systems need to be fully assessed and evaluated. What follows provides broad guidelines relating to the factors and issues which will be considered in this evaluation. No discussion is offered here of various conveyance methods as it is assumed that the level of sewage flows reaches a critical level (i.e. 300 m3/day) to justify the establishment of a conveyance network.

5.2.1. General Considerations

Since a comprehensive nationwide program of sewage treatment and disposal systems to cover the priority areas of rural Egypt is going to prove to be a costly and a lengthy program, the choice of an 'appropriate sewage treatment technology' requires very careful consideration from both the engineering and economic viewpoints. The final decision regarding the choice set of treatment interventions must consider both engineering and socioeconomic factors in order to maximize the environmental and sanitary impact at the village level, and at the same time minimizing the total capital outlay as well as the recurrent operation and maintenance cost.

The process of technology choices will be village-specific, taking into account the following considerations:(1)

(a) The various socioeconomic characteristics of each village (size of village population, per capita water consumption, availability of basic infra-structural services, etc.

(b) The sanitary habits prevailing in the village;

(c) Land availability (public or private) for the purpose of setting-up wastewater projects. Land is a major constraining factor affecting the choice of an appropriate sewage treatment technology, so that the selection of a certain technology needs to be appropriately-scaled and tailored to fit given village requirements.

---

(1) Cf. Ahmad H. Gaber, "A 'Short-Cut' method for estimating and projecting domestic water consumption rates in Third World villages", Scientific Engineering Bulletin No. 4, 1986, (Cairo: Faculty of Engineering, Cairo University).

Two fundamental economic comparisons which will be included in this evaluation are (1) land intensity vs. capital intensity, and (2) initial capital cost vs. recurrent costs

5.2.2 Land intensity vs. Capital intensity

Measurements of the individual costs associated with implementing a village wastewater project will be used to quantify the relationship between facility capital expenditures and land requirements. Early data indicates that the more land-intensive the technology the less initial capital will be required, and vice-versa.

Since capital cost and availability of land are both constraining factors limiting the replication efforts in rural Egypt, the trade-off between these two constraints should be resolved at the village level. For whenever land is available, with the right quality and at an affordable price (whether public or private), the policy-maker should attempt to choose the treatment technology which requires lower initial capital requirements, without completely sacrificing treatment efficiency and recurrent cost considerations. The rationale behind such procedure lies in the fact that minimizing the capital cost requirements, for any given selected technology, helps to release funds to accelerate the implementation of the program at the national level, thus allowing for a much wider coverage of villages subject only to the fiscal constraint.

It should be noted, however, that the social opportunity cost of any released land for the purpose of the village is not zero, as any released tracts of land deduct either from food production or housing services. In other words, tracts of land diverted to sewage treatment and disposal projects do carry a 'social cost' in terms of forgone food production or rural housing services.

5.2.3 Initial Capital Cost vs. Recurrent Expenditure:

A second trade-off relationship which is inherent in the problem of the choice of wastewater treatment technologies is the relationship between initial capital cost and recurrent expenditures (i.e. annual operation and maintenance costs). Inspection of the cost features and profiles of each of the available six technologies will provide useful data which can be used to define this relationship to the Egyptian village. Early data in this area indicate that the higher the initial capital cost, the higher tends to be the level of recurrent expenditures, and vice versa.

This logic applies across the broad spectrum of technologies being demonstrated from the most sophisticated and expensive technology (i.e. the extended aeration) to the most simple and least expensive technology (i.e. stabilization pond treatment). But the implications of such positive association between initial capital cost and levels of recurrent expenditures are very serious at the macro-level. For, given the constraints on levels of recurrent expenditures on both central and local budgets, technologies that result in lower levels of recurrent expenditures would seem more appropriate in the Egyptian context.

In this respect, the first trade-off between land requirements and initial capital requirements seems to supersede the process of selection of an appropriate technology, as land-intensive technologies normally entail lower levels of recurrent expenditures, perhaps with one notable exception: 'the Aqualife' technology which requires relatively high initial capital costs with low land requirements, but exhibits simple O&M requirements.(1) According to a recent World Bank Report: "providing sufficient land is available at reasonable cost and proximity, the case for choosing stabilization ponds for sewage treatment in LDC's is overwhelming."(2)

---

(1) Cf. Local Development pilot Wastewater projects: Second Interim Report, op.cit., p. 6

(2) Cf. J.P. Arthur, Notes on the Design and Operation of Waste Stabilization Ponds in Warm Climates of Developing Countries, Technical Paper No. 7, (Washington: 1983), p. 4.

Example

Cost Behavior
For Various Wastewater Treatment Technologies
and Some Critical Ratios

Technological Alternatives / Critical Ratios		(1) Wastewater Stabilization	(2) Aerated Lagoon	(3) Oxidation Ditch	(4) Biological Filter
1. Capital cost/ land ratio		2.17	2.64	5.6	7.66
2. Land/equipment cost ratio (un-discounted values)		11.5	2.2	0.77	0.66
3. Present values of capital costs per capita (excluding land)	Values: (in US$)	20	26	22	38
	Ratios:	1	1.3	1.1	1.9
4. Operational costs per annum (in US$)	Values:	50,000	300,000	350,000	200,000
	Ratios:	1	6	7	4
5. Net present values:U (Capital cost (including land) + operating costs (in US$ millions	Values:	5.16	7.33	5.86	8.20
	Ratios:	1	1.42	1.140	1.59

It becomes clear from this table that switching from the 'aerated lagoon' technology to the 'oxidation ditch' technology involves a steep increase in the capital/land ratio, and it becomes even steeper when a switch to the 'Biological filter' technology is made.

A comparable table will be constructed for the pilot wastewater projects using actual cost data emerging from the final accounts for the various village wastewater treatment projects.

Source: Based on data provided in World Bank Report, op.cit, pp. 52-53

5.2.4 The Minimum Net Present Value Economic Solution

Two major factors affect the economics of the choice of an optimal village wastewater treatment technology:

(a) the life-span of the treatment system (i.e. the time-dimension);

(b) the size of population served and the economies of scale involved in the wastewater treatment plants.

The life-span of the treatment system

As each of the village wastewater treatment technologies being demonstrated will have a useful life for a number of years (T), there must be found some way to compare wastewater systems which have different life-spans. The discounting method of comparison will, therefore, be used in this evaluation.

The discounting procedure will be used to "reduce" future cost streams to their 'present worth'. This will allow for the comparison of net present value cost estimates(1) with each other in order to be able to rank the various waste-treatment technologies and systems, to select the minimum net present-value economic solution.

The size of population and economies of scale

It is claimed that the cost per person (or unit of flow) is related to the size of population (or flow) by the following equation:(1)

$$C = a (x)^{b}$$

where:

C = Cost per person (or unit of flow);
X = Size of population (or volume of flow);
(a) and (b) are constants.

The exponent (b) reflects what economists call the economies of scale, in other words, the amount of reduction in unit cost due to the increase in volume or scale of operations. In general, (b) has a range of value: [- 0.3 to - 0.6] in most wastewater treatment plants and lift stations.(2)

---

(1) Cf. S. J. Arceivala, op. cit., p. 548.
(2) Ibid

In the case of the treatment plants, the 'construction cost' is considerably affected by the size of the plant, especially in the case of the sophisticated and capital-intensive technologies. The costs rise sharply as the size of the plant is reduced.(1) As for less capital-intensive technologies such as the 'waste-stabilization ponds' and 'aerated lagoon', they exhibit a relatively little economies of scale factor (i.e. indicating that the cost of construction is not greatly affected by the size of plant or the size of population).(2)

Thus, the 'waste stabilization ponds' need not to be built for a large future population but, rather, expanded from time to time to accommodate future increases in the population size.(3) By contrast, "oxidation ditches may show a cost variation with size between that of lagoons and conventional activated sludge plants".(4) Thus a large period of design is required to allow for future population increases.

5.2.5 Analysis of Recurrent Cost Structure

In the process of evaluating alternative rural sanitation technologies, a detailed analysis of recurrent cost structure is required. A broad breakdown between operation costs proper and maintenance costs need to be established, as the two categories need to be kept distinct, for analytical as well as operational purposes.

Two key elements (i.e. items of cost) affect the recurrent cost structure in a major way, namely: (i) Power consumption; and (ii) manpower and manning requirements. 'Power consumption' in particular stands out as one of the most important recurrent cost features of each considered technology. The more sophisticated and capital intensive waste-treatment technology is likely to be more energy-intensive in operation. This is clearly the case with the two most sophisticated technologies: 'extended aeration' and 'oxidation ditches'.

In the case of Egypt, low energy-consumption is an advantage as the future 'opportunity cost' of energy in Egypt is going to be higher than the current level, in constant local currency terms, and in the absence of major oil discoveries.

---

(1) Cf. S. J. Arceivala, op. cit., p. 548.
(2) Ibid
(3) Ibid
(4) Ibid

The cost of manpower requirements will be assessed in terms of the skill structure and the training cost of the required manpower. For it is also clear that expensive technologies, with sophisticated equipment, require more staff who are also more skilled to operate and maintain, leading thus to high operating costs.

The cost structure of each technology will be identified in analytical tables giving the breakdown by various elements of the cost structure. Following the narrative of this section are cost data collection tables to be completed for each pilot wastewater facility.

These cost data can be easily normalized by the number of total population served, at a given moment in time, to facilitate comparisons on a per-capita basis (i.e. land per capita, equipment cost per capita, energy consumption per capita etc.

5.2.6 The Depreciation of Fixed Assets and Structures

Owing to wear and tear and obsolescence with time, a 'depreciation allowance' for the replacement of fixed assets and structures will be taken into the annual cost structure. Different items of equipment, machinery, and civil works normally have different economic life spans. Their typical values are given below:(1)

	Asset	Typical life-span
1.	Waste treatment plant	20 years
2.	Lift stations (machinery)	10 years
3.	Major civil structures	50 years
4.	Piping	10 years

'Depreciation allowance' can be calculated in various ways. Notable among them are the 'sinking fund method' and 'the straight-line method'. The 'straight' line method' is often preferred for calculating the depreciation allowance for waste treatment plants. In this method the amount set aside each year for depreciation purposes is a fixed percentage of the capital cost.(2)

5.2.7 Inflation Accounting

The cost structure contained in these tables will be adjusted to account for inflation, as the disbursement cycle of capital expenditure could well extend over a number of years. Such inflation accounting is very important, to render comparable various technologies, with different 'gestation periods'.

---

(1) Cf. S.J. Arceivala, op.cit., p. 554.
(2) Ibid., p. 555

An additional category of cost (i.e. 'other overheads') will also be reserved to other items of 'hidden costs', which should be revealed through a detailed analysis of the final accounts for the pilot projects. One source of these extra 'hidden' cost elements may emanate from the lack of proper infrastructure services (i.e. roads, electricity towers, ... etc.), needed to support the setting-up of waste water projects.

5.2.8. The Problem of Selecting the Optimal Site for the Treatment Plant

The issue of selecting the optimal location of the treatment plant at the village level will also be considered in this evaluation. A wrong decision in this respect could lead to excessive cost and a considerable amount of waste of valuable resources. Therefore, the selection of the 'optimal site' needs to be guided by cost minimization considerations.(1)

Many villages could benefit from 'externalities', i.e. the existence of such basic services as: access road, electricity tower, water connections, ... etc. The treatment plant could be located very close to these basic amenities and then connected to a first-grade drain by a proper effluent pipe resulting in a substantial cost saving, rather than following the conventional view which requires the treatment plant to be located near the first-grade drain.

There is also a number of possibilities which need to be explored in connection with the optimal location of the plant. It is quite conceivable that one village and one town could be combined to be serviced with the same treatment plant should the conditions allow.

5.3 Pilot Facility Economic Comparison Data Collection

Following are pilot village wastewater facility cost data collection logic tables which show the type of data which will be collected to quantify facility construction costs and recurrent costs for operation. Table 5-8 illustrates the data collection logic which will be followed in determining the total cost to build/implement village wastewater treatment facilities. Table 5-9 illustrates the data collection logic which will be followed in determining the total recurrent cost

---

(1) The choice of an optimal site for a sewage treatment plant poses a number of technical problems (i.e. type of soil, level of water tables, ... etc.) which need to be addressed separately. Cf World Bank Report, op.cit, p. 28.

Table: 5-8

TOTAL COST TO BUILD/IMPLEMENT VILLAGE WASTEWATER TREATMENT SYSTEMS

(Data Collection Logic Table)

DESIGN COSTS SUMMARY TABLE

- A. Collection Sys.
- B. Pump Station
- C. Treatment Plant
- D. Access Road

LAND COSTS SUMMARY TABLE

- A. Pump Station
- B. Access Road
- C. Plant Site

CONSTRUCTION COSTS SUMMARY TABLE

A. Collection Sys.

- Cost Summary Table
- o civil costs worksheet
- o indirect costs worksheet

B. Pump Station

- Cost Summary Table
- o civil costs worksheet
- o mech. costs worksheet
- o elec. costs worksheet
- o indirect costs worksheet
- o elec. supply connection

C. Access Road

- Cost Summary Table
- o civil costs worksheet
- o indirect costs worksheet

D. Treatment Plant

- Cost Summary Table
- o civil costs worksheet
- o mech. costs worksheet
- o elec. costs worksheet
- o indirect cost worksheet
- o water supply connection
- o elec. supply connection

Table: 5-9

TOTAL RECURRENT OPERATIONS COSTS FOR VILLAGE SEWERAGE SYSTEMS

(Data Collection Logic Table)

- **COLLECTION SYSTEM**
  - O&M Labor Worksheet for Sewage Collection network
  - Collection System Recurrent Operations Costs Worksheet (other than labor)
  - Collection System Recurrent Maintenance Costs Worksheet (other than labor)
- **SEWAGE PUMP STATION**
  - O&M Labor Worksheet for Sewage Pumping Stations
  - Pumping Station(s) Recurrent Operations Costs Worksheet (other than labor)
  - Pumping Station(s) Recurrent Maintenance Costs Worksheet
- **WASTEWATER TREATMENT PLANT**
  - O&M Labor Worksheet for Wastewater Plant Operations
  - Wastewater Plant Recurrent Operations Costs Worksheet (other than labor)
  - Wastewater Plant Recurrent Maintenance Costs Worksheet

of each pilot village wastewater facility. This data collection effort has been designed to separate individual cost components so that the true cost of village wastewater facility implementation can be viewed on a unit cost basis. This data will be linked in the subsequent design of a national plan for rural sanitation (section six of this report). Each of the village wastewater pilot projects under evaluation have a database file made up of separate sub-files for each major evaluation component, ie..facility raw costs, performance data, maintenance data/costs, village population data, per capita water consumption before and after facility implementation, etc. The sub-files include space for the entry of the individual variables being measured, the summation of these variables, and their subsequent comparison amongst the other pilot projects. This data collection effort will be linked with the wastewater facility O&M training activity (task e2.) in order to perpetuate facility cost monitoring by O&M technicians as a routine part of operations.

Included in Annex IV is a complete set of facility capital cost data worksheets and data summary tables which will be used in completing this investigation.

Included in Annex V is a complete set of recurrent cost data worksheets and summary tables which will be used in completing this investigation.

SECTION 6

REPLICATION ISSUES

6.1 The Project-Cycle and Problems of Cash-Flow Management

Proper cash management of funds will be a major factor affecting the successful implementation/replication of village wastewater projects. The cash management of village wastewater project implementation funds must take into account the different 'gestation periods' for each wastewater technology. The gestation period for some technologies and projects could take up to three years.

The efficiency in the 'disbursement cycle' of funds is of great importance to avoid unnecessary delays, and the reduction of 'real' available finance through inflation. In this connection, it is important to know the exact nature of 'finance mix' in the case of each project. Three possible sources of finance for village wastewater projects will be investigated during the evaluation:

(a) Central Government funds;
(b) Local Government funds;
(c) Grants from foreign donors.
(d) Local contributions

Different rules and accounting procedures will be at work for each type of finance, which would affect the release of funds. Therefore, the process of coordination and synchronization between various sources of finance is of crucial importance for the implementation of wastewater projects with minimal delays.

6.2 Problems of Long-Range Planning

In order to implement a comprehensive nationwide rural sanitation program, covering around 4,000 villages, a high degree of intergovernmental cooperation will be required. The fiscal and time dimensions of such a program will be great. Problems of time-phasing and cost rationalization are of extreme importance in this context and will be considered in this evaluation.

6.3 Determining the 'Choice Set'

The village pilot wastewater demonstration projects are now providing a foundation of data, specific to the local scene, which will be invaluable in the subsequent comparison of the various lines of action at the national level in terms of the cost-effectiveness of the various alternative technologies and processes. Also, the experience now being gained in the field will help avoid, in the future, certain errors of facility design and implementation.

Summary data from the pilot facility's product evaluation and economic evaluation will be used to identify the optimal technology (or process) for waste treatment and disposal in the context of rural Egypt. For example, the evaluation sets out to identify to what extent the 'Aqualife process' may be considered an optimal technology, from a national viewpoint, as it entails low operating and maintenance cost and requires small land area. Its main drawback lies in the relatively high initial capital cost associated with it and its unknown practical treatment efficiency.

A second example, in this respect, is the Aerated lagoon process which requires relatively low initial capital cost and entails low maintenance cost but high operating cost. Nonetheless, its main drawback lies in its relatively high land requirements. But both technologies share one common feature; namely low operating and maintenance cost, which must be seen as a great advantage in the rural Egyptian context.

In this example situation, the choice between these two technologies would be conducted in terms of the availability of land requirements at the village-level. The decision rule which will be followed in this process of choosing an appropriate technology is to minimize the initial capital cost element. The stabilization pond technology is also a 'good candidate in terms of its low initial capital and recurrent cost, but again it requires large land area.

In sum, the choice set between various alternative technologies will be reduced and narrowed down, if possible, to a minimum of three basic technologies, applicable at the national level, subject to the availability of land at the village level.

6.4 Problems of Coverage & Time-Phasing

Once the choice set is firmly determined, the problem of coverage and time-phasing stand-out as the most crucial problem from the viewpoint of long-range planning.

The key issue which will be addressed in this evaluation is where to start and where to end. A number of sub-issues will also be looked at in this respect, namely:

(a) How many villages are going to be served each year, and in which locations?

(b) What intermediate solution (and devices) can be carried out, until the full coverage is completed?

(c) What is the time-horizon of the national comprehensive program?

The answer to the first question will be determined primarily by the availability of finance (whether through local sources or through foreign-aid). The availability of the right finance mix - in terms of local and foreign currency - is of crucial importance for proper annual budgeting and thus the annual coverage rate; in terms of number of villages served / total number of villages not served.

Since land values invariably rise with time, it would seem in order to acquire areas of land required for future sewage treatment and disposal systems at an early stage in order to save on the cost of land acquisition. In this connection, land owned by Government and semi-governmental bodies need to be allocated to future wastewater projects at an early stage to avoid any unforeseen conflicts.

There is also a need to locate the range of villages to be served by wastewater projects, on an annual basis, as a function of the degree of urgency. For instance, it is clear that the problem of rural sanitation is more acute in lower Egypt than in Upper Egypt, and in certain governorates, it is even more acute than others.

Given the annual budget constraint, the allocation of funds between various governorates is a matter of hard bargaining. Nonetheless, some objective criteria (and indicators) will be identified for allocating funds among governorates and villages. For example, criteria such as; (a), the size of village population; (b), levels of per capita water consumption; (c) level of ground and subsoil water, will be used to indicate the priority regions and villages within the framework of a five-year plan.

Because a national program for rural sanitation will require many years to fully implement (20 to 25 years), many villages will remain without proper drainage and disposal facilities for quite sometime, thus resulting in continued high levels of canal and drainage pollution. This evaluation sets out to identify some intermediate solutions in order to reduce the level of organic pollution in canals and drainages.

Setting-up primary treatment units in as many villages as possible could provide a partial solution to the problem. Such primary treatment systems and processes can be easily linked-up later with a more integrated scheme of secondary treatment and disposal(1), thus avoiding any waste in national resources in the long run.

---

(1) This requires special waiver from Law 48/1982.

To illustrate this point, tentative estimates are given below, where treatment schemes are compared over a time-horizon of ten years (from 1990 to the year 2000):

	Scheme (A) Covering 100 villages (2.5 million people) (networks + secondary treatment plants)	Scheme (B) Covering 100 villages (2.5 million people) networks + primary treatment)(3)
1. Average investment cost per capita:	LE 100 (at 1988 prices)	LE 60 (at 1988 prices)
2. Average investment cost per village:	LE 2.5 million (at 1988 prices)	LE 1.5 million (at 1988 prices)
3. Total investment over 10 years:	LE 250 million (at 1988 prices)	LE 150 million (at 1988 prices)
4. Average annual budget expenditure:	LE 25 million (at 1988 prices	LE 15 million (at 1988 prices)
5. Total annual budget		LE 40 million per annum

This pace of coverage of the example is considered to be too slow given the magnitude of village sanitary drainage problems. A more appropriate and accelerated pace could cover 500 villages each ten years, at the rate of 50 villages per annum, at the estimated cost of L.E. 100 million per annum (at 1988 prices).

At any rate of implementation, receiving waters downstream considerations must be taken into account in prioritizing villages to be served first with wastewater projects, as such considerations will result in minimizing the overall environmental pollution to downstream users over time.

6.5 Implications for the Local Manufacturing Sector

Because the availability of foreign exchange is a major constraint, affecting the development of the Egyptian economy, this evaluation will include an investigation of the merit of setting-up local industries to manufacture pieces of wastewater treatment equipment, materials and spare parts needed to implement a national program of rural sanitation.

This local manufacturing development strategy will require a clear vision and implementation policy from the central government right from the start. This development strategy requires the standardization of equipment and the various components of the treatment plants in order to facilitate the process of future local procurement of such items. Given the size and scale of a national program for rural sanitation, it may justify the setting-up of such industries.(1)

Again, this strategy will require a high degree of intergovernmental coordination to allow such feeding industries to emerge, thus leading to a higher degree of self-reliance. It should be noted, however, that - apart from enhancing the process of local industrialization - the main national target should be to cut down the foreign exchange component of the rural sanitation program.

Nonetheless, in the light of the experience of many developing countries (including Egypt), the process of import-substituting industrialization has proved, at times, to be more import-intensive than the process of pure importation. Careful consideration will be given to this matter, in order to maximize the developmental impact of such an industrialization drive and to avoid any self-defeating and disappointing results.

---

(1) Cf. Report on Issues of Development and Environment in Egypt (Cairo: The Services' Committee of the Shura Consultation Council, June 1986), p. 58 - Arabic.

It is clear that the choice between alternative village wastewater treatment and disposal technologies cannot be viewed as a purely technical matter. Economic considerations are of paramount importance in rationalizing such choice and in order to determine the minimal choice set, and to sort-out superior vs. inferior technologies within a given context (i.e. village-specific).

In summary, the following variables (or factors) stand out as most crucial in the process of choice of an optimal technology:

(a) the availability of land at the village-level, and at what price;

(b) levels of annual recurrent cost (operating and maintenance), adjusted for inflation;

(c) the level of energy-consumption for the technology, as the future opportunity cost of energy will weigh very heavily on the economies of operation of any given technology;

(d) manpower requirement, in particular, in terms of certain critical skills;

(e) the life-span of any given treatment technology, as various life-spans entail different net present values which affect the process of choice;

(f) the size of population served, since certain technologies are more sensitive than others, for considerations of economies of scale; and

(g) the availability of supporting and ancillary services (e.g. water works, roads, electricity towers, etc.)

ANNEX I

PILOT WASTEWATER FACILITY'S STATUS REPORT (May 1989)

EXTENDED AERATION PLANTS.

STATUS REPORT (APRIL 1989)

NO	VILLAGE NAME. POPULATION (YEAR)	GOVERNORATE NAME	PROJECT TYPE	DESIGN: CONTRACT AWARD	DESIGN: DESIGN COMPLETED	CONSULTANT	CONSTRUCTION CONTRACTION: CONTRACTOR	CONTRACT AWARD	CONTRACT VALUE	CONTRACT PERIOD	CONSTRUCTION WORK: SITE TAKE OVER	START DATE	SUBST. COMPLETED	FINALLY COMPLETED	REMARKS
1	MEET KHOLY 8557 (1985)	DAMIETTA	SOAF	09-Aug-83	22-Dec-84	NOPWASD FOR T.O.R AND ENG.MOHAMED IBRAHIM SOLIMAN DESIGN.	8 FOR TREAIMENI MODERN CO. FOR ARCHITECTURAL WORKS & SAOF CO. FOR 8 PLANTS		2,042,119 FFR.	MON.(12)		17-Apr-85	15-Dec-86		1.The plant was completed 1987,and in operation. There are some problems with the operation.
			ELECT.WORKS						10,087,574 8 PLANTS						2.Electricity for the site.
			SEWERAGE						31,966						
			ELECT.WORKS						191,000	MON(12)		05-Jun-83		14-Feb-85	1.The project is completed and in operation.
			WATER-ROAD						64,964 60,154						
2	SERW 11836 (1985)		SOAF	09-Aug-83	22-Dec-84				SAME AS M.K 46,289	MON.(12)		17-Apr-85			1.The civil work is almost completed. 2.The mechanical works are completed. 3.SOAF rep. was to do testrun,but the contract was withdrown and retendered (7 plants). 4.Est. % completion is 92%. 5.Tender opening was on feb-6-89.(two bids) 6.Allocat. for the 7 plants are insufficient.
			ELECT.WORKS												
			SEWERAGE						171,000	MON.(8)		24-Apr-83		24-Apr-84	1.The project is completed, not in operation.
			ELECT.WORKS						46,427						
			WATER-ROAD						33,875						
3	SHARABAS 7331 (1985)	DAMIETTA	SOAF	09-Aug-83	22-Dec-84	FOR SEWERAGE HOUSING DEPARTEMENT.	8 FOR SEWERAGE LOCAL CONTRACTOR FOR EACH VILLAGE		SAME AS M.K 28,989	MON.(12)		17-Apr-85			1.Est. % completion is 47%. 2.No mechanical works have been done. 3.Contract was retendered as explained.
			ELECT.WORKS												
			SEWERAGE						187,226			03-May-83		02-Jul-84	1.The project is completed, not in operation.
			ELECT.WORKS						43,226						
			WATER-ROAD						31,370						
4	RODA 10966 (1985)		SOAF	09-Aug-83	22-Dec-84				SAME AS M.K 61,897	MON.(12)		17-Apr-85			1.Est. % completion is 9%. 2.Contract was retendered as explained.
			ELECT.WORKS												
			SEWERAGE						81,960			14-Apr-83		12-Nov-83	1.The project is completed, not in operation.
			ELECT.WORKS						?						
			WATER-ROAD						84,575						
5	MEET ABU GHALB 8100 (1985)		SOAF	09-Aug-83	22-Dec-84				SAME AS M.K 15,243	MON.(12)		17-Apr-85			1.Est. % completion is 2%. 2.Contract was retendered as explained.
			ELECT.WORKS												
			SEWERAGE						205,148			07-Jan-83		06-Jan-85	1.The project is completed, not in operation.
			ELECT.WORKS						57,148						
			WATER-ROAD						49,935						

(contd.) EXTENDED AERATION PLANTS.

STATUS REPORT (APRIL 1989)

EEG DATA BASE. PAGE (2)

NO	VILLAGE NAME. POPULATION (YEAR)	GOVERNORATE NAME	PROJECT TYPE	DESIGN			CONSTRUCTION CONTRACTION				CONSTRUCTION WORK				REMARKS
				CONTRACT AWARD	DESIGN COMPLETED	CONSULTANT	CONTRACTOR	CONTRACT AWARD	CONTRACT VALUE	CONTRACT PERIOD	SITE TAKE OVER	START DATE	SUBST. COMPLETED	FINALLY COMPLETED	
6	KAFR ARAB 6659 (1985)		SOAF ELECT.WORKS SEWERAGE ELECT.WORKS WATER-ROAD	09-Aug-83	22-Dec-84				SAME AS M.K: 26,011 174,701 55,701 41,773	MON.(12)		17-Apr-85 14-Aug-83		13-Apr-84	1.Est. % completion is 17%. 2.Contract was retendered as explained. 1.The project is completed, not in operation.
7	WASTANY 8138 (1985)	DAMIETTA	SOAF ELECT.WORKS SEWERAGE ELECT.WORKS WATER-ROAD	09-Aug-83	22-Dec-84	MOPWASD FOR T.O.R AND ENG.MOHAMED IBRAHIM SOLIMAN DESIGN.	MODERN CO. FOR ARCHITECTURAL WORKS & SAOF CO. FOR 8 PLANTS LOCAL CONTRACTOR FOR EACH VILLAGE		SAME AS M.K: 16,006 199,718 49,718 14,125	MON.(12)		17-Apr-85 09-May-83		08-May-84	1.Est. % completion is 2%. 2.Contract was retendered as explained. 4.The project is completed, not in operation.
8	GHONIMYA 4724 (1985)	DAMIETTA	SOAF ELECT.WORKS SEWERAGE ELECT.WORKS WATER-ROAD	09-Aug-83	22-Dec-84	FOR SEWERAGE HOUSING DEPARTEMENT.			SAME AS M.K: 26,011 221,696 89,656 83,996	MON.(12) MON.(12)		17-Apr-85 15-Jul-83		15-Jul-84	1.Est. % completion is 9%. 2.Contract was retendered as explained. 1.The project is completed, not in operation.

OXIDATION DITCH PLANTS.

STATUS REPORT (APRIL 1989)

NO	VILLAGE NAME POPULATION (YEAR)	GOVERNORATE NAME	PROJECT TYPE	DESIGN: CONTRACT AWARD	DESIGN: DESIGN COMPLETED	CONSULTANT	CONSTRUCTION CONTRACTION: CONTRACTOR	CONTRACT AWARD	CONTRACT VALUE	CONTRACT PERIOD	CONSTRUCTION WORK: SITE TAKE OVER	START DATE	SUBST. COMPLETED	FINALLY COMPLETED	REMARKS
9	RAHAMNA 14220 (1985)	DAMIETTA	OXIDATION DITCH ELECT. SEWERAGE	17-Feb-88	19-Jul-88	MOPWASD FOR T.O.R & A.A.W. FOR DESIGN	TIMSAH COMPANY LOCAL CONTRACTOR	17-Feb-88	3,574,210 4 PLANTS 72,986 131,042	MON.(18)	20-Feb-88	19-Jul-88			1.The earth work is almost complete. Foundation and lining works are progressing. 2.Cost of water works @ LE.11,357.50.
10	KHATATA 15002 (1985)	DAMIETTA	OXIDATION DITCH ELECT. SEWERAGE ELECT.	18-Feb-88	23-Nov-88		LOCAL CONTRACTOR	18-Feb-88	65,070 37,000 32,505		20-Feb-88	23-Nov-88			1.Leveling the site is under way. 2.Cost of water works @ LE.15,717.50.
11	KAFR SOLIMAN 11224 (1985)	DAMIETTA	OXIDATION DITCH ELECT. SEWERAGE ELECT.	18-Feb-88	19-Jul-88		LOCAL CONTRACTOR	18-Feb-88	13,727 150,000 53,982		14-Mar-88	19-Jul-88			1.The erath work is almost complete. Foundation and lining works are progressing. 2.Cost of water works @ LE.18,238.
12	KAFR BATIKH 30999 (1985)	DAMIETTA	OXIDATION DITCH EQUIPMENT SEWERAGE	18-Feb-88	01-Jan-88		EQUIPMENT AERATION INDUSTIES	18-Feb-88 24-May-88	$ 383,684 150,000	DAYS(180)	07-Aug-88	15-Aug-89			1.Drying beds are almost complete,excavation 2.Aerators supplied by Aeration Industries for the four plants,under seperate contract.

AQUALIFE PLANTS.

STATUS REPORT (APRIL 1989)

NO	VILLAGE NAME POPULATION (YEAR)	GOVERNORATE NAME	PROJECT TYPE	DESIGN			CONSTRUCTION CONTRACTION				CONSTRUCTION WORK				REMARKS
				CONTRACT AWARD	DESIGN COMPLETED	CONSULTANT	CONTRACTOR	CONTRACT AWARD	CONTRACT VALUE	CONTRACT PERIOD	SITE TAKE OVER	START DATE	SUBST. COMPLETED	FINALLY COMPLETED	
13	SAHEL GAWABER 5800 (1987)	MENUFIYA	AQUALIFE	01-Mar-87			AMI		$ 200,000	MON.(12)			15-Jan-88	30-Apr-88	1.The plant was officially opened on 31-Jan-89. by the primeminister and American ambassador. 1.The plant is in operation on/off as the house connections are not yet completed. 2.House connections are being constructed under the supervision of the project eng.
			SEWERAGE		15-Aug-87		LOCAL CONTRACTOR	24-Oct-87	328,128	MON.(12)	15-Nov-87	15-Nov-87	15-Dec-88	01-Jan-89	
14	KOM AKHDAR 5200 (1987)		AQUALIFE	01-Mar-87			AMI		$ 200,000	MON.(12)	09-Apr-88		15-Jan-88	30-Apr-88	1.The plant is not in operation as the network is not yet completed. 1.The construction is behind the schedule because of the site problems.
			SEWERAGE		15-Aug-87		LOCAL CONTRACTOR	24-Oct-87	328,128	MON.(12)	15-Nov-87	15-Nov-87			
15	KAFR GHAB 17000 (1987)	DAMIETTA	AQUALIFE	01-Mar-87			AMI		$ 325,000	MON.(12)	10-Apr-88		15-Jan-88	30-Apr-88	1.The plant is not in operation as the network is not yet completed. 2.The construction is behind the schedule. 3.The contract was extendended to be completed in 12/3/89,the work is progressing.
			SEWERAGE		16-Jul-87		LOCAL CONTRACTOR	16-Jul-87	501,552	MON.(12)	15-Jan-88	30-Apr-88			
16	BARASHIA 7322 (1985)	DAMIETTA	AQUALIFE ELECT.	19-Jul-88	15-Dec-88	DR.IBRAHIM AL HATTAB	EMAS CIVIL WORKS	19-Jul-88	578,700 for two plants.	MON.(12)	01-Aug-88	24-Jan-89			1.The work is progressing . 2.Cost of ELECT. works @ LE.16,362. 3.Cost of WATER works @ LE.3,897.50 1.Network is completed, but not in operation.
			SEWERAGE ELECT.				LOCAL CONTRACTOR		150,000 35,568			14-Aug-83		13-Apr-84	
17	KAFR SAAD BALAD 14470 (1985)		AQUALIFE ELECT. EQUIPMENT	19-Jul-88	15-Dec-88	DR.IBRAHIM AL HATTAB	EMAS	19-Jul-88	22,229		01-Aug-88	24-Jan-87			1.The work is progressing. 2.Cost of water works @ LE.16,348.0 2.Aqualife units supplied by AMI,separate contract.
							MECHANICAL WORKS	26-May-88	$ 329,457						
			SEWERAGE ELECT.						150,000 40,590			14-Aug-83		13-Apr-84	1.Network is completed, but not in operation. 2.Elect. for the pump station.

NO	VILLAGE NAME POPULATION (YEAR)	GOVERNORATE NAME	PROJECT TYPE	DESIGN: CONTRACT AWARD	DESIGN: DESIGN COMPLETED	DESIGN: CONSULTANT	CONSTRUCTION CONTRACTION: CONTRACTOR	CONTRACT AWARD	CONTRACT VALUE	CONTRACT PERIOD	CONSTRUCTION WORK: SITE TAKE OVER	START DATE	SUBST. COMPLETED	FINALLY COMPLETED	REMARKS
18	DAQAHLA 5800 (1987)	DAMIETTA	AERATED LAGOON	12-Dec-87	19-Jul-88	USDC DR.A.FADEL	CANAL COMPANY	24-Dec-87	199,656	MON.(8)	15-Aug-88	30-Sep-88			1.The construction is behind schedule, the work is progressing.
							EQUIPMENT AERATION INDUSTRY.	24-Jun-88	$ 32,209	DAYS(180)			28-Sep-88		2.Aerators supplied by aeration industries.
			SEWERAGE		15-Aug-87	CHEMONICS	LOCAL CONTRATOR	20-Jul-87	379,620	MON.(12)	15-Aug-87	30-Sep-87			3.The network is completed,but the pump station is under construction.
19	ADDLYA 3200 (1987)	DAMIETTA	STABILIZATION POND	12-Dec-87	19-Jul-88	USDC DR.A.FADEL	CANAL COMPANY	12-Dec-87	186,380	MON.(8)	30-Sep-88	30-Sep-88			1.The construction is behind schedule, the work is progressing.
			SEWERAGE		15-Aug-87	CHEMONICS	LOCAL CONTRATOR	20-Jun-87	303,660	MON.(12)	09-Aug-87	09-Aug-87			2.The network is completed,but the pump station is under construction.
20	BOLAQ 4574 (1986)	NEW VALLEY	STABILIZATION POND		15-Oct-88	USDC DR.A.FADEL									1.Construction work was tendered for the two villages,BOLAQ &BALAT. 2.Tender opening was on 15-jan-89.
21	BALAT 5558 (1986)	NEW VALLEY	STABILIZATION POND		15-Oct-88										1.Construction work was tendered for the two villages,BOLAQ &BALAT. 2.Tender opening was on 15-jan-89. 3.LE. 1,000,000 from LDII allocation for the two villages.
22	SHARM SHEIKH DAHAB NUEWIBA TABA	SOUTH SINIA	CONTRACT 81 (WATER)	15-Apr-85	16-Aug-87	A.A.W DR. AHMED ABD WARITH	CARE &ENGINEERING MARKETS CO.	06-Mar-88	949,642	MON.(12)	28-Sep-88 28-Sep-88 29-Sep-88 29-Sep-88	28-Oct-88			1.Construction of 75mm & 100mm water pipe lines is under way at SHARM SHEIKH city. 2.No water work at the other cities. 3.The % of excution of this contract is 6 %. 4.The work of this contract is behind schedule. 5.The work at TABA was postponded for complete master plan including the new area.
	SHARM SHEIKH DAHAB NUWEIBA TABA	REHAB. AND RENEWING OF WATER & WASTEWATER FACILITIES FOR FOUR AQUBA GOULF CITIES.	CONTRACT 84 (WASTEWATER)	15-Apr-85	16-Aug-87			06-Mar-88	4,496,570	MON.(12)	28-Sep-88 28-Sep-88 29-Sep-88 29-Sep-88	28-Oct-88 28-Oct-88 28-Oct-88 28-Oct-88			1.The main work at the treatment plant. 2.The % of excution is 75 % (SHARM SHEIKH). 3.The % of excution is 70 % (DAHAB) 4.The % of excution is 75 % (NUWEIBA). 5.The work at TABA was postponded for complete master plan including the new area.

V - C - CONNECTION & PRIMARY TREATMENT.

STATUS REPORT (APRIL 1989)

EEG DATA BASE. PAGE (6)

NO	VILLAGE NAME POPULATION (YEAR)	GOVERNORATE NAME	PROJECT TYPE	DESIGN			CONSTRUCTION CONTRACTION				CONSTRUCTION WORK				REMARKS
				CONTRACT AWARD	DESIGN COMPLETED	CONSULTANT	CONTRACTOR	CONTRACT AWARD	CONTRACT VALUE	CONTRACT PERIOD	SITE TAKE OVER	START DATE	SUBST. COMPLETED	FINALLY COMPLETED	
22	KAFR GAZAR	QALUBIYA	SEWERS PUMP STATION FORCE MAIN			HOUSING DEPT. HOUSING DEPT.	LOCAL CONTRACTOR LOCAL CONTRACTOR	07-Jun-87 04-Jan-88	265,500 113955	MON.(10) MON.(10)	21-Jun-87 30-Jan-88	21-Jun-87 30-Jan-88	05-Jun-88	29-Aug-88	1.The SEWERS ARE COMPLETED.plant was completed 2.The pump station is completed. 3.The force main was tendered on Dec-89
23	ZAMKALON 30000 (1987)	SHARQIYA	SEWERAGE PRIMARY SEDIMENTATION TANK		15-May-86 15-May-86	HOUSING DEPT. HOUSING DEPT.	LOCAL CONTRACTOR LOCAL CONTRACTOR	24-Sep-86 24-Sep-86	440312	MON.(12)	29-Nov-86	29-Nov-86			1.The network,pump station were completed. 1.Concrete work is completed,mechanical works to be completed this year(1989)

ANNEX II

DRAFT GUIDELINE IMPLEMENTATION PROCEDURES FOR VILLAGE WASTEWATER TREATMENT FACILITIES

ANNEX II

DRAFT GUIDELINE IMPLEMENTATION PROCEDURES FOR VILLAGE WASTEWATER TREATMENT FACILITIES

Table of Contents

1. Planning Stage for Village Wastewater Projects
   - 1.1 collection of basic information
   - 1.2 determination of service levels
   - 1.3 determination of potential for regionalizing

2. Engineering Study Stage
   - 2.1 selection of engineering services
   - 2.2 checklist for study contents
   - 2.3 criteria for project selection
   - 2.4 specific project selection

3. Project Design Review Stage
   - 3.1 purpose of design review
   - 3.2 responsibility for design review

4. Contract Tender, Award, and Construction Stage
   - 4.1 preparation of design and tender documents
   - 4.2 tendering and construction supervision

5. Operation and Maintenance Considerations During the Construction Stage
   - 5.1 staffing
   - 5.2 permits, sewer use rules and regulations
   - 5.3 septage receiving plan
   - 5.4 operations budget
   - 5.5 process data logs and records
   - 5.6 laboratory analysis program
   - 5.7 preventive maintenance program
   - 5.8 staff training
   - 5.9 facility information center

6. Project Commissioning Stage
   - 6.1 field tests
   - 6.2 equipment manufacturer instruction sessions

7. Facility Operations Stage
   - 7.1 national level responsibilities
   - 7.2 governorate level responsibilities
   - 7.3 markaz/village level responsibilities

1. Planning Stage for Village Wastewater Projects

There can be no doubt that the increase in the supply of water to both urban and rural areas may give rise to new problems of wastewater disposal. These two services are so closely related that they must be viewed together; failure to do so will only create additional problems. For this reason, the planning of village wastewater projects must also consider the effects this type of project will have on village water service and vice versa.

To facilitate the planning process the overall responsibility for water and wastewater systems in the governorate should be assigned to a new "Water and Wastewater Department" at the governorate level. The core group of employees for this department should come from the transfer of department of Housing employees who have experience and responsibilities in water supply and wastewater. The following entities are also to be involved in the planning process:

Village Level: Village Chief and Popular Councils

Markaz Level: Popular Council, Markaz Chief, and technical department heads

The governorate should agree on the amount of its total available funds (including amounts from the GOE, bilateral agencies, and contributions from villagers), the governorate proposes to invest in the development of water and wastewater systems. This total then becomes the pool of funds available for water and wastewater investments for a planning period of, say, three years.

1.1 Collection of Basic Information and Inventory of Existing Works

As a first step in the planning process for a village wastewater facility, the Governorate's department of Water and Wastewater should collect the following information for each village in the governorate:

1) Population of the mother and satellite villages
(Source: 1986 Census)

2) Number of buildings in the mother and satellite villages
(Source: 1986 Census)

3) Number of buildings connected to the piped system
(Source: 1986 Census)

4) Recent (1986) topographical survey maps showing all sections of every village, 1:2500 or 1:1000 Scale.
(Sources: The Surveying Department of the Ministry of Public Works and Water Resources; Army Surveying Department; and geological Surveying Services)

5) Hydro-geological maps and well water data for the general area of the village (groundwater resources maps)
(Source: Ministry of irrigation: Water Research Center, Institute of Groundwater Research)

The Governorate should request each Village Council to appoint a community group to collect information about existing water and wastewater facilities in their village. Assistance in completing the inventory may need to be provided by Markaz and/or governorate engineers. This information is essential for planning and design of future extensions, and village efforts should be considered a self-help contribution.

Water System Consumer Connections

Data is needed on consumers connected to the system, the number of unconnected buildings within 25 m of a main, and the number of unconnected buildings more than 25 m away from a main.

Provide a current record of the number of building connections of the following types:

- o Residential premises with one or two taps
- o Residential premises with more than two taps
- o Mosques and schools
- o Public buildings
- o Private commercial or industrial buildings
- o Public standpipe sites

Indicate how many connections have meters:

- o Total meters
- o Meters in operating condition

Non-piped Water Sources

A map is needed which shows the location, width and direction of flow of canals and drains within the boundaries of the village. The same map should show the location of sites most commonly used by the public for collecting water and washing clothes or dishes.

Wastewater Facilities

1) House Toilets/Latrines

- o Total number of households with toilets/latrines
- o Total number of household without toilets/latrines
- o Type of toilet/latrines

2) Public Building Toilets

- o Number of public buildings with toilets
- o Type of disposal system used by public building toilets

62

3) Sullage and Septage Collection

- o Number of houses with sullage vaults
- o Number, capacity and type of septage and sullage removal vehicles
- o Number, capacity and type of private septage or sullage removal units
- o Number, type and capacity of community sullage vaults, if any.

4) Wastewater Disposal

- o Name and location of drain(s) into which septage and sullage are being discharged (Show on a map).
- o Village assessment of the extent of present problems of wastewater collection and disposal.

Other Facilities

1) Vehicles

(Number, type, age, condition)

2) Workshops and Tools

Manpower in the workshop

(Size, furnishings, tools and equipment)

3) Pipe and Spare parts

(Number, type, condition)

Water Revenues (Most recent complete year)

- o For water used by customers
- o For making house connections

Wastewater Revenue

- o Total revenue (if any)

Preparatory Tasks to be Undertaken at the Village Level

The governorate should request each village/markaz to undertake the following tasks when needed to update the 1986 census report:

- o Count the number of occupied dwellings in settlements other than the mother and satellite villages.
- o Estimate the number of people living in these settlements.
- o Determine the number of houses with water connections.

In addition, the Popular and Executive Councils should be required to identify the five most important concerns or problems the village has in regard to water supply and wastewater disposal.

Village Priorities and Willingness to Pay

- What does the village consider its highest priorities in regard to sanitation?
- For good quality, reliable means of disposing of septage and sullage, how much more would they be willing to pay?
- How much is each household now paying for emptying of sewage vaults.

1.2 Determination of Service Levels

The governorate should agree on target service levels of wastewater systems. Possible target service levels for wastewater disposal are listed below:

Home Systems

Every household to have an approved toilet facility (type to vary with the standard of housing and toilet waste collection system).

Septage (Toilet Waste) Collection and Removal

Septage to be removed from every house at the frequency required to ensure that household toilets can operate in a sanitary manner.

Sullage (Wastewater) Collection and Removal

Every household to be provided with a reasonable alternative of sullage disposal other than disposing of it on village streets.

Septage and Sullage Disposal

Every village to be provided with an approved means and location for the disposal of collected septage and sullage.

1.3 Determination of Potential for Regionalizing

The governorate should, in accordance with national policy, investigate its possibility of providing water and wastewater services to some or all of its villages on a regional basis.

6

The following situations are those most likely to provide the conditions under which regional systems could be more cost effective and administratively preferable to individual village systems:

1) Villages which are reasonably close to cities which have sewage collection systems and treatment .

2) Groupings of villages reasonably close to one another, particularly (though not necessarily) those within the same markaz.

In general, the governorates should encourage the concept of having only one, connected system to serve all the villages and settlements in a mother village.

Assessment of Potential for Regionalizing

The governorate should arrange for such support to be provided by a private sector in identifying where regionalizing might be the preferred approach.

Each governorate should prepare a "Preliminary plan for Regionalizing to serve as input to the process of deciding upon the allocation of water and wastewater funds within the governorate.

2. Engineering Study Stage

A feasibility study is required before any funds for a wastewater project can be allocated. Studies are required for each project whether it is for an individual village or a regional system.

Sources for conducting feasibility studies include:

1) Utilization of NOPWASD resources, or

2) Utilization of local private sector consultants, or

3) Governorate water/wastewater departments.

These studies should most likely not be conducted by governorate (or markaz) engineers until governorate level water/wastewater master plans have been completed. Governorate staff should now concentrate their resources on the management of village water and wastewater programs and not in the details of their execution. In the future, when the governorate has a wastewater master plan, it should be possible for governorate engineers to conduct specific village wastewater feasibility studies given the guidelines and resources provided in the master plan.

2.1 Selection of Engineering Services

In deciding how best to conduct the feasibility study, the following criteria should be used:

1) Qualifications and experience of the Engineer

2) Ability to complete the work on time

3) Independence of judgement

2.2 Checklist for Study Contents

The principal reasons for requesting the governorate and the respective villages to provide information and agree on levels of service as suggested in Section 4.1 are (1) to reduce the cost of the prefeasibility study, (2) to allow the studies to be completed more quickly and, (3) to develop the villages sense of ownership.

The scope of work for conducting prefeasibility studies will vary depending upon such factors as:

1) Regional vs. independent systems, and

2) Extent of wastewater problems (areas with high groundwater tables will require more attention than other areas).

2.3 Criteria for Project Selection

Criteria for selection of which specific projects to fund must be developed by each governorate. Suggested criteria include:

1) Allocation of adequate funds for selected villages to upgrade existing wastewater systems to the the target service levels.

2) Allocation of adequate funds for selected villages to install non-sewered wastewater collection and disposal systems to the target levels identified.

3) Select villages in the governorate to be provided with target levels of wastewater service.

4) Priority should be given to those villages experiencing the highest levels of soil saturation caused by rising ground water.

5) Priority should be given to those villages which make the greatest effort in the collection of basic data and show a substantial willingness to pay for a portion of the capital costs.

2.4 Specific Project Selection

The actual selection of which projects to fund should be decided by the governorate by preparing a list of proposed projects based on:

- o Available funds
- o Results of the prefeasibility studies
- o Application of the suggested criteria

3. Project Design Review Stage

In any project, including village wastewater projects, the detailed design represents the mid-point of the process in that the preliminaries have been dispensed with and only the implementation is to follow. At this stage all decisions must be made and the client's requests and requirements must be incorporated into the project by the engineer. Once the engineer has completed his work, usually in the form of detailed plans and contract documents, it is extremely important that he discuss the product with his client. Likewise it is in the clients own interest to discuss the details with the engineer. Everything which the client expects to have in the end product and which he will pay for, will be decided upon at the detailed design stage.

3.1 Purpose of the design review process

During the review process many pertinent questions are often raised. Obviously these questions will vary considerably depending on the type of project. For example a building project will obviously have a completely different set of criteria to that of a wastewater treatment plant and so the design review will follow a different course. Nevertheless the purpose and goals of such a review process should be the same and can be summarized as follows:

a. To ensure that the client's original specific concepts and requirements have been fully satisfied by the design presented in the drawings and documents.

b. To review the entire design to ensure that the product is exactly what the client now wants.

c. To establish that the quality of materials to be used meets with the clients approval.

d. To discuss the tender documents and make sure, in broad terms that they comply with and complement the design.

e. To ensure that everything is completely ready for proceeding to the tendering stage and to agree on the schedule for doing this.

67

3.2 Responsibility for Design Review

Design reviews are normally carried out by experienced engineers in the particular field they are reviewing. Such experience is gained from many years, which they themselves have acquired, in the design office and or the field. In the case of the village wastewater facilities, designs should be reviewed by the housing department engineers with technical support provided by an outside consultant. In the future the housing department staff may be able to perform this design review process on their own.

4. Contract Tender, Award, and Construction Stage

4.1 Preparation of Design and Tender Documents

Village wastewater facility designs and specifications should be completed by engineering firms with demonstrated experience and qualifications. For most projects, this work should be done by local private sector consultants who have been pre-qualified for such work.

Tender documents should be prepared by the engineering firm which prepared the designs and specifications.

4.2 Tendering and Construction Supervision Procedures

Contractors should be allowed to participate in the tender process. Tender should be called by the Governorate or Markaz, reviewed jointly by the Governorate and the design engineer, and awarded by the Governorate or Markaz.

For less complex work (pipelines and collection systems), the work of the contractor should be supervised by trained construction engineers from the Markaz Housing Department.

For more complex work (wastewater treatment facilities, mechanical and electrical equipment installation), the work of the contractor should be supervised by the engineer who prepared the design plans and specifications.

All construction supervision services should be spot checked periodically by the Governorate's department of Water and Wastewater.

5. Operation and Maintenance Considerations During the Construction Phase

Experience has shown that about 75% of all wastewater facility start-up delays result from equipment failures, 20 from inadequate equipment, and 5% from process failures. To overcome these statistics and ensure a successful start-up require careful planning, a comprehensive pre-startup equipment testing program, and firm direction during the actual start-up.

Well before the actual start-up, comprehensive plans of operation need to be prepared which address all of the operational elements of the wastewater treatment facility Listed below is a brief description of each of the facility plans of operation which should be prepared during the construction phase:

5.1 Staffing

Because a village wastewater facility is generally a new responsibility for a community, new staff must be identified and hired specifically for the operation of the plant. In some cases the village may elect to transfer existing personnel from the village/markaz maintenance department to work at the new wastewater treatment facility. The Village's first task should be to define the staffing needs for the wastewater treatment plant. In addition, the village should prepare a staff organizational chart and detailed job descriptions for the facility's operation. These job descriptions must be comprehensive to include the prerequisite qualifications, duties, and responsibilities of each work position.

5.2 Permits, Sewer Use Rules and Regulations

In order to protect the village wastewater treatment plant and satisfy governorate policy, the village should prepare sewer use rules and regulations and a user charge system. In addition, the village must obtain all of the needed permits governing the effluent discharge for the facility

5.3 Septage Receiving Plan

Septage receiving procedures need to be prepared which detail the steps to follow for receiving the discharge of septage waste haulers. Strict procedures must be established regarding the discharge of large amounts of septage wastes into the plant in order to protect the facility's operation. In addition, a system of assessing a service charge for septage waste receiving needs to be established.

5.4 Operations Budget

An operations budget must be prepared before start-up which details each operational area for normal and worst case costs. Included in the overall budget should be the new staffing requirements and expected maintenance costs. Budget plans for the second years operation can make use of the first years cost data which reflects the actual recurrent costs to operate the facility.

5.5 Process Data Logs and Records

Individual process data logs and record forms must be prepared for each process system in the treatment plant. One of the key elements of a facility O&M program is data collection and record keeping. Records are needed for the following reasons:

1. Plant operation records can indicate the efficiency of the plant and its treatment units and past and future problems.

2. Records are needed to show type and frequency of maintenance of operating units and evaluation of the effectiveness of maintenance programs.

3. Records can provide data upon which to base recommendations for modifying plant operation.

4. Records of past performance and operational procedures are invaluable tools for the engineer in the evaluation of present performance and serve as a basis for the design of future treatment units.

5. Records are used to support budget requests for personnel, additional facilities, or equipment.

The type of records to be kept depends on the size and type of wastewater treatment facility. A small lagoon facility will not require the number or variety of records required of a extended aeration facility. Five classifications of records must be kept for each type of wastewater treatment facility:

1. Operation and performance records.

2. Descriptive and inventory records of the physical plant and stock.

3. Maintenance records.

4. Financial and cost records.

5. Personnel records.

One of the most important process variables which must be measured and recorded is the influent flow rate and total volume of wastewater entering the facility per day. The rate of wastewater flow entering into individual treatment process units has a significant effect on the quality of the final effluent. Flow rates must also be known for calculating of loadings on treatment processes and treatment efficiency. Flow rate data will help the engineer determine when the capacity of the facility is being exceeded and support decisions concerning facility expansion and process design modifications.

5.6 Laboratory Analysis Program

In order to support the operation of the wastewater treatment plant a process control and water quality analysis program must be prepared and include the following:

1. Laboratory bench sheets.

2. Process sampling program.

3. Laboratory supply inventory control system.

4. Monthly report forms.

5.7 Preventive Maintenance Program

Prior to start-up, a program for completing routine maintenance must be prepared for each piece of equipment. This maintenance can be completed by the plant maintenance staff or a private maintenance contractor depending on the village's desire in this regard. Regardless of the maintenance strategy employed, a defined maintenance plan (including time schedules for the work to be completed) must be complete and ready before the plant receives any flow. This means that all of the necessary tools, equipment, and lubricants must be on-site before the start-up. In addition, the plant maintenance staff must be familiar with the installed equipment and trained in its maintenance.

5.8 Staff Training

Staff training is considered the single most important element in the overall start-up program because it has the greatest potential effect on the initial and long term performance of the facility. Whenever new or different equipment enters the workplace, or when new employees start a job, a training need always exists. The greater the difference between the new job and the old job, the greater the need for training. In the case of the village wastewater treatment facilities, both the equipment and the employees are new to the job site.

Training of village wastewater treatment staff should target one overall goal - the good performance of the treatment facility. The definition of good performance of a treatment facility includes the following key points:

1. Long term reliable operation.

2. Energy efficient operation.

3. Safe operation.

4. Quality effluent.

5. Plans for emergencies.

In order to meet this goal requires a well trained staff starting on the first day of operation. Training means teaching a person to do his job (it does not mean teaching someone to pass an exam). It then follows that training also means teaching those <u>skills</u> and <u>knowledge</u> which an employee needs to do his job.

Village wastewater facility staff training should be the responsibility of the design engineer. The design engineering company is the group responsible for determining how the facility should operate and as such is in the best position to train the plant staff. Staff training should be included as a normal part of the engineers start-up services for the wastewater treatment plant.

Aside from the person (trainee) who actually does the work at the plant, no one is more important to the success or failure of training than the trainee's supervisor. As the primary manager of the work being performed, the supervisor's attitudes and involvement are critical. The supervisor controls the operator's immediate work environment and, consequently, factors such as performance standards, job knowledge, work procedures, and safety practices. In order for the training to have a truly lasting effect on the good performance of the facility, the role of the supervisor must allow for the continuing transfer of knowledge and provide feed-back to the employee.

Therefore, training should target two audience levels, i.e. the plant supervisor and, the plant operators and maintenance technicians. A separate training workshop should be held for the plant supervisor and plant manager. This training workshop for plant supervisors should address two primary goals:

1. Prepare the supervisors to be able to operate and maintain each plant system and associated equipment.

2. Develop basic training skills for supervisors to aid in the subsequent training programs for plant operators. Prepare these supervisors to be able to continue the training effort on a regular basis.

As a complement to the plant training program, individual equipment vendor instruction sessions should be scheduled to coincide with related lesson topics. As a part of the construction contractor's responsibilities, each equipment manufacturer should be required to supply a qualified field service technician to provide detailed instruction to plant staff in the operation and maintenance of the installed equipment. To ensure each field service technician covers all of the important points in their instruction sessions, a detailed outline listing points for discussion should be prepared by the engineer. The inclusion of equipment vendor instruction sessions into the overall training program will help the trainees better understand the workings of each equipment unit. This knowledge, when coupled with the broader topics of the plant training program, provide complete coverage of all the need-to-know information related to the wastewater treatment facility.

5.9 Facility Information Center

Another plant operations task which should be completed during the end of the construction phase is the establishment of an information center for the facility. Items which should be included in this information center are listed below:

1. Project design file.

2. Equipment Manufacturer's O&M manuals.

3. As-Built drawings.

4. Facility O&M manual.

The establishment of these files should be the responsibility of the design engineer. Preparation of the facility O&M manual is a big task and as such the engineer should be made to follow standard guidelines in its preparation. The agreement between the owner and the design engineer must be clear in defining the establishment of this information center.

6. Project Commissioning Stage

The Contract specifications should define the Engineer's and Contractor's responsibilities with regard to the field testing of materials, equipment, and systems. Generally, the contractor should be required to furnish all power, facilities, labor and materials necessary for tests to verify that the contract specifications have been met and that materials and quality of workmanship are acceptable. Also all items of equipment which make up a system should be tested as a unit to ensure the required performance of all component parts, and the complete system.

In general the testing of equipment is the responsibility of the contractor where as the testing of material such as concrete and aggregates requires the services of independent testing laboratories that are employed by the Owner, or the engineer. The testing procedures to be utilized on any given project should be fully discussed with the Contractor at the preconstruction conference.

All standard forms and the test data should be properly filed as part of the permanent job records. The maintenance of a complete and accurate set of permanent test records as described in this section should be the duty and responsibility of the resident representative.

Generally, contract specifications should require the equipment manufacturer to provide the necessary technical services to instruct the Owner's operating personnel in the use, operation and maintenance of all equipment.

6.1 Field Tests

A separate binder should be established for filing test data for each specification division which contains material or equipment that is to be tested.

The conducting of field tests usually requires considerable planning and organization so that the testing can proceed expeditiously. It is highly desirable that the Contractor be advised promptly as soon as a test is completed as to whether its results are satisfactory or not. Tests must be run again if the results are not satisfactory. It is necessary that the person who will evaluate the test results either be present or be fully advised as soon as possible as to what the test results are.

All the specified tests should be satisfactorily performed prior to final acceptance of the equipment. Field tests are normally conducted by a manufacturer's representative and witnessed by the Engineer and Owner's representative. Field tests may be used as acceptance tests, if so specified. All guarantees and warranties required should be filed for each equipment item specified.

Before any sewage is allowed to enter into the treatment plant a comprehensive program for field testing the major pieces of process equipment should be completed. As a part of the construction contract, the contractor should be responsible for preparing detailed equipment testing procedures and conducting the actual field tests. Field test procedure submittals should be prepared by the contractor and include the following topics to be considered acceptable:

1. Describe in detail step-by-step testing procedures.

2. Include information on equipment, materials, instruments, etc., required to perform the test.

3. Indicate how all test parameters will be measured.

4. Include detailed figures and plans illustrating the test installation; including appropriate piping layout, electrical and instrumentation system, etc.

5. Show all instrument taps and connections required to perform the tests.

6. Describe all requirements for electricity, fuel, chemicals, water, etc., and explain how they will be provided.

7. Include a list of all data to be taken during performance test. Submit a sample of the test log to be used to record data during the test. The test log indicated frequency of data readings.

8. Include descriptions and examples of all calculations to be performed during the performance test.

9. Confirm that calibration of all instruments will be made prior to testing and certified calibration data will be submitted with test results.

10. Indicate duration of each test run and number of readings to be taken. Detail any preliminary action that may be necessary to be performed prior to the field performance test; such as warm-up, checking of instruments, adjustments, etc.

11. Describe procedures of averaging or interpreting data.

12. Describe procedures to be used for adjusting results back to specified acceptance criteria

13. List, describe, and justify any deviations from test codes and standards.

Several additional key points regarding the equipment field testing are:

1. Prior to conducting individual field acceptance tests, the Contractor must complete the installation of all items of equipment, appurtenances, and incidentals associated with the particular mechanical system to be tested. This includes readying all mechanical, electrical, and instrumentation systems associated with each piece of equipment, including:

(a) motor control centers;
(b) control panels;
(c) raceway, conduit, wiring, control equipment, and field connections required for all process equipment and system;
(d) electric interconnections;
(e) instrumentation;
(f) mechanical piping, valves, valve operators, (including power and/or pneumatic supplies) and supports;
(g) gauges;
(h) switches;
(i) auxiliary support system; and,
(j) all other necessary equipment, appurtenances, and incidentals required to complete the system.

2. All mechanical and electrical equipment first must be lubricated, adjusted, and calibrated prior to testing. Any adjustments required for proper field performance testing should be made prior to the test.

3. Once the installation of the equipments is completed, the Contractor should be required to furnish the services of the manufacturer's field service technician. The manufacturer's technician will conduct tests. It is suggested that a walk-through of the proposed field test procedures be conducted at the equipment site before starting the test.

6.2 Equipment Manufacturer O&M Instruction Sessions

It should be standard practice to specify that the manufacturers of all pumps, equipment and system shall instruct the Owner's operating personnel in the operation, lubrication and maintenance of the unit or the complete system.

7. Facility Operations Stage

Operating and maintaining a village wastewater system require the effective interaction of a number of departments in the governorate, Markaz, and village. This situation is particularly true when the community is directly involved in the operation and maintenance of the wastewater system.

The daily operations of the village treatment system should be the responsibility of the village maintenance department under the overall control of the proposed governorate water & wastewater department. Each of these two functional groups (village maintenance group and governorate water & wastewater department) have specific responsibilities and must be actively involved in the operation of the wastewater facility. In addition, these two functional groups must interact with relevent units of the Irrigation and of Health departments.

Listed below are the activities of major importance at each function level:

7.1 National Level

1. The 'Higher Committee for Nile and Water Body Protection' sets the effluent standards (Law 48) for receiving streams. This committee is headed by the Minister of Irrigation and includes representatives from several other Ministries and NOPWASD.

2. The Ministry of Irrigation is responsible for implementing Law 48 and monitoring/enforcing wastewater treatment facility effluent discharges.

3. The Ministry of Health, under the direction of the Ministry of Irrigation is responsible for sampling and analysis of wastewater treatment plant discharges every three months. This sampling frequency can be increased based on the decision of the Ministry of Irrigation. The Ministry of Health must report the sample analysis results

to the facility owner and the Ministry of Irrigation within 30 days of collecting the sample. If the sample analysis results are in violation of the discharge permit, the facility owner must pay a fine to the Ministry of Irrigation.

7.2 Governorate Water & Wastewater Department

1. Maintain effluent standards for the use and control of the Governorate's water resources. Standards may be the same or stricter than national standards.

2. Establish policies, programs, and techniques for effective governorate-wide water quality planning and management, and provide implementation of such policies and programs.

3. Establish and maintain a licensing and permit system to cover (a) all wastewater discharges; (b) wastewater collection and treatment system operators; (c) industrial waste discharges; (d) sewer use rules and regulations; (e) septage waste discharges into wastewater treatment systems; (f) other related operations as may become necessary from time to time.

4. Develop and implement a governorate-wide water quality monitoring program.

5. Conduct investigations and inspections to ensure compliance with standards, policies, regulations, permits, and licenses. Carry out enforcement actions when violations occur and report all violations to the Ministry of Irrigation.

6. Establish and implement a public education, information, and promotional program on controlling pollution. Stimulate volunteer cooperation and participation by the general public.

7. Coordinate pollution control activities among the other governorates and national departments.

8. Participate in reviewing new wastewater facility designs with the governorate Housing Department.

7.3 Markaz/Village Level

1. Operate and maintain, on a continuous basis, the wastewater collection and disposal systems in such a manner as to protect the interests and promote the well-being of the area served and its people. Initiate repair, replacement, expansion, and improvement projects as necessary.

2. Control the entrance of pollutants which can damage the collection system or interfere with the treatment process.

3. Establish appropriate cost recovery policies and price incentives and, in accordance with these, apply a user charge system for domestic and industrial wastes.

ANNEX III

PILOT VILLAGE WASTEWATER UNIT PROCESS
EVALUATION WORKSHEETS/DATA FORMS
(Example for the Extended Aeration Treatment Process)

VILLAGE WASTEWATER TREATMENT FACILITY
UNIT PROCESS EVALUATION DATA
(Extended Aeration Treatment Process)

1. PRELIMINARY TREATMENT

Grit and Grease separator process

Tank diameter _____
Surface area _____
Depth _____
Volume _____
Weir length _____

Flow (design average) _____
Flow (design hourly peak) _____
Flow (actual average flow) _____
Flow (actual peak hourly flow) _____

Detention time (minimum per Spec.) _____
Detention time (proposed in Spec.) _____
Detention time (actual) _____

Weir overflow rate (design avg. flow) _____
Weir overflow rate (maximum acceptable) _____
Weir overflow rate (actual: average flow) _____
Weir overflow rate (actual: for peak hourly flow) _____

Surface settling rate (design value) _____
Surface settling rate (maximum acceptable) _____
Surface settling rate (actual: average flow) _____
Surface settling rate (actual: peak flow) _____

VILLAGE WASTEWATER TREATMENT FACILITY
UNIT PROCESS EVALUATION DATA
(Extended Aeration Treatment Process)

2. PRIMARY TREATMENT

Primary Clarification Process

No. of clarifiers	_____
Tank diameter	_____
Tank depth avg.	_____
Linear meters of weir	_____
Surface area	_____
Volume	_____
Flow (design average)	_____
Flow (design peak hourly)	_____
Flow (actual: average)	_____
Flow (actual: peak hourly)	_____
Weir overflow rate (design average)	_____
Weir overflow rate (design peak hourly)	_____
Weir overflow rate (desired average)	_____
Weir overflow rate (desired max. peak hourly)	_____
Weir overflow rate (actual: average flow)	_____
Weir overflow rate (actual peak hourly)	_____
Surface settling rate (design average)	_____
Surface settling rate (design peak hourly)	_____
Surface settling rate (desired average)	_____
Surface settling rate (desired peak hourly)	_____
Surface settling rate (actual: average flow)	_____
Surface settling rate (actual: peak hourly flow)	_____
Solids loading rate (design average)	_____
Solids loading rate (design peak hourly)	_____
Solids loading rate (desired average)	_____
Solids loading rate (actual: average flow)	_____
Solids loading rate (actual: peak hourly flow)	_____
BOD loading (maximum per spec.)	_____
BOD loading (average per spec.)	_____
BOD loading (desired loading)	_____
BOD loading (actual average loading)	_____

VILLAGE WASTEWATER TREATMENT FACILITY
UNIT PROCESS EVALUATION DATA
(Extended Aeration Treatment Process)

3. SECONDARY TREATMENT

Final Clarification process

No. of clarifiers	
Tank diameter	
Tank depth avg.	
Linear meters of weir	
Surface area	
Volume	
Flow (design average)	
Flow (design peak hourly)	
Flow (actual: average)	
Flow (actual: peak hourly)	
Weir overflow rate (design average)	
Weir overflow rate (design peak hourly)	
Weir overflow rate (desired average)	
Weir overflow rate (desired max. peak hourly)	
Weir overflow rate (actual: average)	
Weir overflow rate (actual: peak hourly)	
Surface settling rate (design average)	
Surface settling rate (design peak hourly)	
Surface settling rate (desired average)	
Surface settling rate (desired peak hourly)	
Surface settling rate (actual: average flow)	
Surface settling rate (actual: peak hourly flow)	
Solids loading rate (design average)	
Solids loading rate (design peak hourly)	
Solids loading rate (desired at average flow)	
Solids loading rate (desired at peak hourly flow)	
Solids loading rate (actual: average flow)	
Solids loading rate (actual: peak hourly flow)	
Hrdraulic detention time (design average)	
Hrdraulic detention time (design peak flow)	
Hydraulic detention time (desired average)	
Hydraulic detention time (desired peak flow)	
Hydraulic detention time (actual: average flow)	
Hydraulic detention time (actual: peak flow)	

VILLAGE WASTEWATER TREATMENT FACILITY
UNIT PROCESS EVALUATION DATA
(Extended Aeration Treatment Process)

3. SECONDARY TREATMENT (con'd)

Aeration Process

Number of aeration tanks	_____
Tank width	_____
Tank Length	_____
Water Depth	_____
Volume per tank	_____
Total vollume for all aeration tanks	_____
BOD loading (maximum per spec.)	_____
BOD loading (average per spec.)	_____
BOD loading (actual average loading)	_____
BOD loading (desired loading)	_____
Hrdraulic detention time (design average)	_____
Hydraulic detention time (desired average)	_____
Hydraulic detention time (desired max. peak hourly)	_____
Hydraulic detention time (actual; average flow)	_____
Hydraulic detention time (actual; peak flow)	_____
MLSS design value	_____
MLSS actual operating value	_____
MLSS desired value	_____
F/M ratio design value	_____
F/M ratio actual	_____
F/M ratio desired operating value	_____
Sludge age (design value)	_____
Sludge age (actual)	_____
Sludge age (desired value)	_____

VILLAGE WASTEWATER TREATMENT FACILITY
UNIT PROCESS EVALUATION DATA
(Extended Aeration Treatment Process)

3. SECONDARY TREATMENT (con'd)

Return Sludge System

Return sludge pump type _____
Number of return sludge pumps _____

Maximum pumping capacity controllable (actual) _____
Minimum pumping capacity controllable (actual) _____
Maximum pumping capacity controllable (desired) _____
Minimum pumping capacity controllable (desired) _____

Return sludge design flow rate (% of Infl. Q) _____
Return sludge actual flow rate (% of Infl. Q) _____
Return sludge desired flow rate (% of Infl. Q) _____

ANNEX IV

PILOT VILLAGE WASTEWATER FACILITY IMPLEMENTATION COSTS DATA WORKSHEETS AND SUMMARY TABLES

Table: _____

TOTAL COST TO BUILD/IMPLEMENT VILLAGE WASTEWATER TREATMENT SYSTEMS

(Data Collection Logic Table)

DESIGN COSTS SUMMARY TABLE

- **A. Collection Sys.**
- **B. Pump Station**
- **C. Treatment Plant**
- **D. Access Road**

LAND COSTS SUMMARY TABLE

- **A. Pump Station**
- **B. Access Road**
- **C. Plant Site**

CONSTRUCTION COSTS SUMMARY TABLE

- **A. Collection Sys.**
  - Cost Summary Table
  - o civil costs worksheet
  - o indirect costs worksheet
- **B. Pump Station**
  - Cost Summary Table
  - o civil costs worksheet
  - o mech. costs worksheet
  - o elec. costs worksheet
  - o indirect costs worksheet
  - o elec. supply connection
- **C. Access Road**
  - Cost Summary Table
  - o civil costs worksheet
  - o indirect costs worksheet
- **D. Treatment Plant**
  - Cost Summary Table
  - o civil costs worksheet
  - o mech. costs worksheet
  - o elec. costs worksheet
  - o indirect cost worksheet
  - o water supply connection
  - o elec. supply connection

File: compcnct

Table: ____

VILLAGE PILOT WASTEWATER TREATMENT FACILITIES
COMPARISON OF CONSTRUCTION COSTS

Treatment Technology Type/ Facility Name	Facility Design Capacity (cu.M/day)	Facility Total Cost of Const.	Facility Cost per 1000 Cu. M of design flow	Mech. Works percent of Total Facility Cost (% Import)	Elec. Works percent of Total Facility Cost (% Import)	Civil Works percent of Total Facility Cost (% Import)	Facility Total Cost Including Cost of Land for WWTP Site	Agricultural Value (grade) for Land
Extended Aeration								
Serw								
Meet El Kholy								
Sharabas								
Aqualife Treatment Process								
Kafr El Ghab								
Barashiya								
Kafr Saad								
Kom Akhdar								
Shael Gawaber								
Oxidation Ditch								
Kafr El Batikh								
Kafr Soliman								
Khyata								
Rahamna								
Stabilization Pond								
Aadliya								
Bolaq								
Balat								
Sharm El Sheikh								
Dahab								
Neweiba								
Taba								
Aerated Lagoon								
Dagahla								
Primary Treatment								
Zankaloon								

File:summwtp

Table: ____

TOTAL COST TO BUILD/IMPLEMENT VILLAGE WASTEWATER TREATMENT FACILITY

(Data Collection Logic Path)

VILLAGE WASTEWATER TREATMENT FACILITY; TOTAL COST TO IMPLEMENT

TABLE____

WWTP Access Road Total Costs to Implement.....TABLE____

(worksheet summary table)

Access road design costs worksheet;.....Table_____

Access road construction costs worksheet;.....Table____

Access road land costs worksheet;.....Table____

Treatment Plant (w/out access road) Total Cost To Implement....TABLE____

(worksheet summary table)

Treatment plant land costs worksheet.....Table____

Treatment plant design costs worksheet.....Table____

Treatment plant power connection costs worksheet...Table____

Treatment plant water connection costs worksheet...Table____

Treatment plant construction costs summary.....Table____

- o civil costs worksheet.....Table____
- o mech. costs worksheet.....Table____
- o elec. costs worksheet.....Table____
- o indirect cost worksheet.....Table____

File:wwtotal

Table: ____

VILLAGE WASTEWATER TREATMENT FACILITY
TOTAL IMPLEMENTATION COSTS
SUMMARY TABLE

BASIC DATA	
Name of Village Pilot Wastewater Facility:.....	_____
Type of Treatment System.....	_____
Design Flow for WWTF (cu. M/day).....	_____
Design population:.....	_____

WWTP Implementation Cost Catagory	Item Cost	Item percent of total Implementation Cost for WWTP
WWTF Site Land Cost		
WWTP Design Cost		
WWTF power connection costs		
WWTF water connection costs		
WWTF Construction Cost		
* (WWTF construction indirect costs)		
* (WWTF mechanical works cost)		
* (WWTF civil works cost)		
* (WWTF electrical works cost)		
WWTF Access Road Land Cost		
WWTF Access Road Design Cost		
WWTF Access Road Construction Cost		
TOTAL COST OF CONSTRUCTION		

NOTE
* Included in WWTF construction cost

File:roadipto

Table: ____

VILLAGE WASTEWATER TREATMENT FACILITY
ACCESS ROAD IMPLEMENTATION TOTAL COST
WORKSHEET SUMMARY TABLE

BASIC DATA

Name of Village Pilot Wastewater Facility:..... _____
Type of Treatment System..... _____
Design Flow for WWTF (cu. M/day)..... _____
Design population:..... _____

Implementation Cost Catagory	Item Cost	Item percent of Total Implementation Cost for Access Road
WWTF access road land total cost		
WWTF access road design total cost		
WWTF access road const. total cost		
TOTAL COST		

File: COSTLAND

Table: ___

VILLAGE WASTEWATER TREATMENT FACILITY
WWTP SITE LAND COSTS

BASIC DATA

WWTP Facility Name:..... _____
Type of treatment process:..... _____
Location of WWTP to Village..... _____

VARIABLES FOR COMPARISON

Type of land (desert, delta):..... _____
Agricultural capacity grade (1-4 highest):.. _____
Agricultural income potential (LE/year):.... _____
Land cost per hectar:..... _____
Amount of land purchased for WWTP..... _____
Cost of land for WWTP..... _____

Cost Catagories for WWTP Access Road Purchase	Costs by Function Group			
	Primary Consultant	Review Consultant	Governorate	Markaz
WWTP land selection process				
Locating/Search for land owner				
Process of price negotiating with owner				
Survey of selected site				
Preparation of land deed				
Process of finding financing for land purchase				
Total amount paid for aquired land				
SUB TOTAL				

TOTAL COST OF LAND FOR WWTP SITE AREA: _____

File:wwiptot

Table: _____

VILLAGE WASTEWATER TREATMENT FACILITY
WWTP (w/out access road) IMPLEMENTATION TOTAL COST
WORKSHEET SUMMARY TABLE

BASIC DATA

Name of Village Pilot Wastewater Facility:..... _____
Type of Treatment System..... _____
Design Flow for WWTF (cu. M/day)..... _____
Design population:..... _____

Implementation Cost Catagory	Item Cost	Item percent of total Implementation Cost for WWTP
WWTF land total cost		
WWTF design total cost		
WWTF power connection cost		
WWTF water connection cost		
WWTF construction total cost		
TOTAL COST		

File: dsgnroad

Table:

VILLAGE WASTEWATER TREATMENT PLANT
ACCESS ROAD DESIGN COSTS

BASIC DATA

Facility Name:.....
Type of access road.....
Length of road.....

Cost Catagories for WWTP Access Road Design Work	Costs by Function Group			
	Primary Consultant	Review Consultant	Governorate	Markaz
Prepare RFP for Pre-Final Design				
Advertise for consultant				
Prepare Basic Data/Conceptual plan				
Conceptual plan review				
Prepare preliminary design				
Preliminary design review				
Prepare final design				
Final design review				
Prepare copies of contract documents				
Advertise for construction contractor				
Evaluation of construction bids				
SUB TOTAL				

TOTAL COST OF ACCESS ROAD DESIGN:

File: landroad

Table: ____

VILLAGE WASTEWATER TREATMENT FACILITY
ACCESS ROAD LAND COSTS

BASIC DATA

WWTP Facility Name:.....
Type of treatment process:.....
Location of WWTP to Village.....
Length of Access road.....

VARIABLES FOR COMPARISON

Type of land (desert, delta):.....
Agricultural capacity grade (1-4 highest):..
Agricultural income potential (LE/year):....
Land cost per hecter:.....
Amount of land purchased for access road:...
Cost of land for access road:.....

Cost Catagories for WWTP Access Road Purchase	Costs by Function Group			
	Primary Consultant	Review Consultant	Governorate	Markaz
Access road selection process				
Locating/Search for land owner				
Process of price negotiating with owner				
Survey of selected site				
Preparction of land deed				
Process of finding funds for land purchase				
Total amount paid for acquired land				
SUB TOTAL				

TOTAL COST OF LAND FOR WWTP ACCESS ROAD: _____

File: civlroad

Table: _____

VILLAGE WASTEWATER TREATMENT FACILITY
CONSTRUCTION COST BREAKDOWN WORKSHEET
FOR ACCESS ROAD CIVIL WORKS

BASIC DATA

Name of pilot wastewater facility..... _____
Type of road..... _____
Length of road..... _____
Location of road..... _____

Civil Works Cost Categories for WWTP Access Road	Cost of Local Purchase	Cost of Import Purchase	Total cost per item	Imported Items Cost % of Total	Item Cost Percent of Total for Access Road Works	Road item Cost per cu. meter of road
Removal of obstructions						
Borrow excavation (source)						
Aggregate base						
Hot asphalt concrete pavement						
Mobilization						
Pipe culvert (type/size)						
Valve adjustment						
TOTAL						

TOTAL COST OF WWTP ACCESS ROAD CONSTRUCTION: _____
(does not include the cost for design or land)

File:water

VILLAGE WASTEWATER TREATMENT PLANT
CONSTRUCTION COST BREAKDOWN WORKSHEET
FOR WATER SUPPLY WORKS

BASIC DATA

Name of pilot wastewater facility..... _____
Treatment technology:..... _____
Capacity of facility (average cu meters flow/day)..... _____
Design Population:..... _____

Water Supply Works Cost Catagories	Cost of Local Purchase	Cost of Import Purchase	Total Cost Per Item	Imported Items Cost % of Total	Item Cost Percent of Total for Water Supply Works
Pipe: size/length					
Trenching					
Valves and fittings					
Insurance					
Equipment rental					
Site dewatering					
TOTAL					

File: powerww

Table:_____

VILLAGE WASTEWATER TREATMENT FACILITY
CONSTRUCTION COST BREAKDOWN WORKSHEET
FOR POWER SUPPLY WORKS

BASIC DATA

Name of pilot wastewater facility..... _____
Treatment Technology:..... _____
Distance of facility from main power line..... _____

Power Supply Works Cost Catagories	Cost of Local Purchase	Cost of Import Purchase	Total cost per item	Imported Items Cost % of Total	Item Cost Percent of Total for Power Supply Works
Cable: size/length					
Trenching					
Site transformer cost					
380 volt switch gear					
Meter installation					
Equipment rental					
Transformer installation cost					
TOTAL					

File: costdsgn

Table: ____

VILLAGE WASTEWATER TREATMENT FACILITY
DESIGN COSTS

BASIC DATA

Facility Name:..... _____
Type of treatment process:.... _____
Design capacity:..... _____cu.M/day

Cost Catagories for WWTP Design Work	Costs by Function Group			
	Primary Consultant	Review Consultant	Governorate	Markaz
Prepare RFP for Feasibility Study & Pre-Final Design				
Advertise for consultant				
Prepare Basic Data/Conceptual plan				
Conceptual plan review				
Prepare preliminary design				
Preliminary design review				
Prepare final design				
Final design review				
Prepare copies of contract documents				
Advertise for construction contractor				
Evaluation of construction bids				
SUB TOTAL				

TOTAL COST OF DESIGN: _____

File:wwcnsum

Table: _____

VILLAGE WASTEWATER TREATMENT FACILITY
CONSTRUCTION TOTAL COST
WORKSHEET SUMMARY TABLE

BASIC DATA	
Name of Village Pilot Wastewater Facility:.....	_____
Treatment Technology:.....	_____
Capacity of Facility (average cu. meters/day):...	_____
Design population:.....	_____

Construction Cost Catagory	Item Cost	Item percent of Total Construction Cost
Construction Indirect Costs		
Mechanical Works Total Cost		
Electrical Works Total Cost		
Civil Works Total Cost		
TOTAL COST OF CONSTRUCTION		

File: wwindcst

Table: ____

VILLAGE WASTEWATER TREATMENT FACILITY
CONSTRUCTION COST BREAKDOWN WORKSHEET
FOR INDIRECT COSTS

BASIC DATA
Name of pilot wastewater facility..... _____
Treatment Technology:..... _____
Capacity of facility (average cu meters flow/day)..... _____
Design Population:..... _____

WWTP Construction Indirect Cost Items	Costs by Function Group			
	Primary Consultant	Review Consultant	Governorate	Markaz
Prepare RFP for consultant to perform construction supervision				
Advertise for consultant				
Review Proposals/Select consultant				
Construction supervision services cost				
SUB TOTAL				

WWTP Total Indirect Costs for Construction _____

File: costmech

Table: ____

VILLAGE WASTEWATER TREATMENT FACILITY
CONSTRUCTION COST BREAKDOWN WORKSHEET
FOR MECHANICAL WORKS

BASIC DATA

Name of pilot wastewater facility.....
Treatment technology:.....
Capacity of facility (average cu meters flow/day).....
Design Population:.....

Mechanical Works Cost Catagories	Cost of Local Purchase	Cost of Import Purchase	Total cost per item	Imported Items Cost % of Total	Item Cost Percent of Total Cost for Mechanical Works
Process piping					
Pumps					
Valves					
Fixed aeration equipment					
Floating aeration equipment					
Clarifier mech. equipment					
Chlorination equipment					
Flow measuring equipment					
Tools					
Laboratory equipment					
Grit collection equipment					
Inlet barscreen equipment					
Furniture/office items					
Toilet & Shower accessories					
Safety equipment					
TOTAL					

File: costelec

Table: _____

VILLAGE WASTEWATER TREATMENT FACILITY
CONSTRUCTION COST BREAKDOWN
FOR ELECTRICAL WORKS

BASIC DATA

Name of pilot wastewater facility..... _____
Treatment Technology:..... _____
Capacity of facility (average cu meters flow/day)..... _____
Design Population:..... _____

Electrical Works Cost Catagories	Cost of Local Purchase	Cost of Import Purchase	Total cost per item	Imported items Cost % of Total	Item cost percent of total cost for Electrical Works
Standby elec. generator					
Site and room lighting					
Grounding system					
380-Volt switchgear					
Panelboards					
HVAC					
Process instrumentation					
Telephone connection					
Temporary power					
TOTAL					

File: costcvl

Table: _____

VILLAGE WASTEWATER TREATMENT FACILITY
CONSTRUCTION COST BREAKDOWN WORKSHEET
FOR CIVIL WORKS

BASIC DATA	
Name of pilot wastewater facility.....	_____
Treatment Technology:.....	_____
Capacity of facility (average cu meters flow/day).....	_____
Design Population:.....	_____

Civil Works Cost Catagories	Cost of Local Purchase	Cost of Import Purchase	Total cost per item	Imported Item Cost % of Total	Item Cost Percent of Total for Civil Works
Earth work					
Road work					
Removal of existing equip.					
Fencing					
Concrete work					
Operations building					
Site dewatering					
Sludge drying beds					
TOTAL					

File:sumps

Table:_____

TOTAL COST TO BUILD/IMPLEMENT VILLAGE SEWAGE PUMPING STATION

(Data Collection Logic Path)

VILLAGE SEWAGE PUMPING STATION TOTAL COST TO IMPLEMENT.....TABLE____

Pumping station land costs worksheet.....Table____

Pumping station design costs worksheet.....Table____

Pumping station power connection costs worksheet.....Table____

Pumping station construction costs summary.....Table____
- o civil costs worksheet.....Table____
- o mech. costs worksheet.....Table____
- o elec. costs worksheet.....Table____
- o indirect cost worksheet.....Table____

104

File:pstotal

Table: _____

VILLAGE SEWAGE PUMPING STATION
TOTAL IMPLEMENTATION COSTS
SUMMARY TABLE

BASIC DATA
Name of Village Pilot Wastewater Facility:..... _____
Type of pump station..... _____
Capacity of pump station..... _____
Design population/flow..... _____

Sewage Pumping Station Implementation Cost Catagory	Item Cost	Item percent of total Implementation Cost for WWTP
Pump Station Site Land Cost		
Pump Station Design Cost		
P.S. Power Connection Costs		
Pump Station Construction Cost		
* (P.S. construction indirect costs)		
* (P.S. mechanical works cost)		
* (P.S. civil works cost)		
* (P.S. electrical works cost)		
TOTAL COST OF CONSTRUCTION		

NOTE
* Included in pump station construction cost

File: psindcst

Table: ____

VILLAGE SEWAGE PUMPING STATION
CONSTRUCTION COST BREAKDOWN
FOR INDIRECT COSTS

BASIC DATA
Name of pilot wastewater facility..... _____
Type of pump station..... _____
Capacity of pump station..... _____
Design Population:..... _____

Sewage Pump Station Construction Indirect Cost Items	Costs by Function Group			
	Primary Consultant	Review Consultant	Governorate	Markaz
Prepare RFP for consultant to perform construction supervision				
Advertise for consultant				
Review Proposals/Select consultant				
Construction supervision services cost				
SUB TOTAL				

Sewage Pumping Station(s) Total Indirect Costs for Construction _____

File: Landps

Table: ____

VILLAGE WASTEWATER TREATMENT SYSTEM
PUMPING STATION LAND COSTS

BASIC DATA

WWTP Facility Name:..... _____
Number of pumping stations:..... _____
Location of pumping station(s)..... _____

VARIABLES FOR COMPARISON

Type of land (desert, delta):..... _____
Agricultural capacity grade (1-4 highest):.. _____
Agricultural income potential (LE/year):.... _____
Land cost per hecter:..... _____
Amount of land purchased for WWTP..... _____
Cost of land for WWTP..... _____

Cost Catagories for Pump Station Land Purchase	Costs by Function Group			
	Primary Consultant	Review Consultant	Governorate	Markaz
Pump Station land selection process				
Locating/Search for land owner				
Process of price negotiating with owner				
Survey of selected site				
Preparation of land deed				
Process of finding fiancing for land purchase				
Total amount paid for aquired land				
SUB TOTAL				

TOTAL COST OF LAND FOR PUMPING STATION(S): _____

File: DSGNPS

Table: ____

VILLAGE SEWAGE PUMPING STATION
DESIGN COSTS

BASIC DATA
Facility Name:..... _____
Type of pumping station..... _____
Design capacity:..... _____cu.M/day

Cost Catagories for Pumping Station Design Work	Costs by Function Group			
	Primary Consultant	Review Consultant	Governorate	Markaz
Prepare RFP for F sibility Study & Pre-Final Design				
Advertise for consultant				
Prepare Basic Data/Conceptual plan				
Conceptual plan review				
Prepare preliminary design				
Preliminary design review				
Prepare final design				
Final design review				
Prepare copies of contract documents				
Advertise for construction contractor				
Evaluation of construction bids				
SUB TOTAL				

TOTAL COST OF DESIGN: _____

File: powerps

Table: _____

VILLAGE SEWAGE PUMPING STATION
CONSTRUCTION COST BREAKDOWN WORKSHEET
FOR POWER SUPPLY WORKS

BASIC DATA

Name of pilot wastewater facility..... _____
Type of pump station..... _____
Distance of facility from main power line..... _____

Power Supply Works Cost Catagories	Cost of Local Purchase	Cost of Import Purchase	Total cost per item	Imported Items Cost % of Total	Item Cost Percent of Total for Power Supply Works
Cable; size/length					
Trenching					
Site transformer cost					
380 volt switch gear					
Meter installation					
Equipment rental					
Transformer installation cost					
TOTAL					

File:pscnsum

Table: _____

VILLAGE SEWAGE PUMPING STATION
CONSTRUCTION TOTAL COST
SUMMARY TABLE

BASIC DATA	
Name of Village Pilot Wastewater Facility:.....	_____
Type of pumping station.....	_____
Capacity of Pump Statiom....(cu. meters/day):...	_____
Design population:.....	_____

Construction Cost Catagory	Item Cost	Item percent of Total Construction Cost
Construction indirect Costs		
Mechanical Works Total Cost		
Electrical Works Total Cost		
Civil Works Total Cost		
TOTAL COST OF CONSTRUCTION		

File: pscivil

Table: _____

SEWAGE PUMPING STATION
CONSTRUCTION COST BREAKDOWN
FOR CIVIL WORKS

BASIC DATA

Name of pilot wastewater facility..... _____
Type of pumping station..... _____
Capacity of station (average cu meters flow/day)..... _____
Design Population:..... _____

Civil Works Cost Catagories	Cost of Local Purchase	Cost of Import Purchase	Total cost per item	Imported Items Cost % of Total	Item Cost Percent of Total for Civil Works
Earth work					
Road work					
Removal of existing equip.					
Fencing					
Concrete work					
Pump house building					
Site dewatering					
TOTAL					

File: psmech

Table: ____

VILLAGE SEWAGE PUMPING STATION
CONSTRUCTION COST BREAKDOWN
FOR MECHANICAL WORKS

BASIC DATA

Name of pilot wastewater facility..... _____
Treatment Technology:..... _____
Capacity of facility (average cu meters flow/day)..... _____
Design Population:..... _____

Mechanical Works Cost Catagories	Cost of Local Purchase	Cost of Import Purchase	Total cost per item	Imported Items Cost % of Total	Item Cost Percent of Total Cost for Mechanical Works
Process piping					
Pumps					
Valves					
Flow measuring equipment					
Tools					
Inlet barscreen equipment					
Furniture/office items					
Toilet & Shower accessories					
Safety equipment					
TOTAL					

112

File: pselec

Table: _____

VILLAGE SEWAGE PUMPING STATION
CONSTRUCTION COST BREAKDOWN
FOR ELECTRICAL WORKS

BASIC DATA	
Name of pilot wastewater facility.....	_____
Type of pump station.....	_____
Capacity of pump station.....	_____
Design Population:.....	_____

Village Sewage pumping station Electrical Works Cost Catagories	Cost of Local Purchase	Cost of Import Purchase	Total cost per item	Imported items Cost % of Total	Item cost percent of total cost for Electrical Works
Power connection					
Standby elec. generator					
Site and room lighting					
Site transformer					
Grounding system					
380-Volt switchgear					
Panelboards					
HVAC					
Process instrumentation					
Telephone connection					
Temporary power					
TOTAL					

File:cstotal

Table: _____

VILLAGE SEWAGE COLLECTION SYSTEM
TOTAL IMPLEMENTATION COSTS
SUMMARY TABLE

BASIC DATA	
Name of Village Pilot Wastewater Facility:.....	_____
Type of collection system.....	_____
Length of network.....	_____
Design population/flow.....	_____

Sewage Collection System Implementation Cost Catagory	Item Cost	Item percent of Total Implementation Cost for WWTP
Collection System Design Cost		
Collection System Construction Cost		
* (C.S. construction indirect costs)		
* (C.S. mechanical works cost)		
* (C.S. civil works cost)		
TOTAL COST OF CONSTRUCTION		

NOTE
* Included in collection system construction cost

File:sumcs

Table:_____

VILLAGE SEWAGE COLLECTION SYSTEM
TOTAL COST TO BUILD/IMPLEMENT
(Data Collection Logic Path)

VILLAGE SEWAGE COLLECTION SYSTEM; TOTAL COST TO IMPLEMENT

TABLE___

Collection system design costs worksheet.....Table___

Collection system construction costs worksheet summary.....Table___
- o civil costs worksheet.....Table____
- o mech. costs worksheet.....Table____
- o indirect cost worksheet.....Table____

File: dsgncs

Table: ____

VILLAGE SEWAGE COLLECTION SYSTEM
DESIGN COSTS

BASIC DATA
Facility Name:..... _____
Type of collection system..... _____
Length of network..... _____

Cost Catagories for Collection System Design Work	Costs by Function Group			
	Primary Consultant	Review Consultant	Governorate	Markaz
Prepare RFP for Pre-Final Design				
Advertise for consultant				
Prepare basic Data/Conceptual plan				
Conceptual plan review				
Prepare preliminary design				
Preliminary design review				
Prepare final design				
Final design review				
Prepare copies of contract documents				
Advertise for construction contractor				
Evaluation of construction bids				
SUB TOTAL				

TOTAL COST OF COLLECTION SYSTEM DESIGN: _____

115

File:cscnsum

Table: _____

VILLAGE SEWAGE COLLECTION SYSTEM
CONSTRUCTION TOTAL COST
SUMMARY TABLE

BASIC DATA	
Name of Village Pilot Wastewater Facility:.....	_____
Type of Collection System.....	_____
Length of network.....	_____
Design population:.....	_____

Construction Cost Catagory	Item Cost	Item percent of Total Construction Cost
Construction Indirect Costs		
Mechanical Works Total Cost		
Civil Works Total Cost		
TOTAL COST OF CONSTRUCTION		

File: csindcst

Table: _____

VILLAGE SEWAGE COLLECTION SYSTEM
CONSTRUCTION COST BREAKDOWN
FOR INDIRECT COSTS

BASIC DATA	
Name of pilot wastewater facility.....	_____
Type of collection system.....	_____
Length of network.....	_____
Design Population:.....	_____

Sewage Collection Sys. Construction Indirect Cost Items	Costs by Function Group			
	Primary Consultant	Review Consultant	Governorate	Markaz
Prepare RFP for consultant to perform construction supervision				
Advertise for consultant				
Review Proposals/Select consultant				
Construction supervision services cost				
SUB TOTAL				

Sewage Collection System Total Indirect Costs for Construction _____

115

Table:____

VILLAGE SEWAGE COLLECTION SYSTEM
CONSTRUCTION COST BREAKDOWN
FOR MECHANICAL WORKS

BASIC DATA

Name of pilot wastewater facility.....
Type of collection system.....
Length of network.....
Design population/flow.....

Sewage Collection System Mechanical Works Cost Catagories	Cost of Local Purchase	Cost of Import Purchase	Total cost per item	Imported Items Cost % of Total	Item Cost Percent of Total Cost for Mechanical Works	Item Cost Percent of Total Cost for Construction (%)
Force main piping/size						
Isolation valves						
Air relief valves						
Sewer cleaning equipment						
Tools						
Mechanical joints						
Flexible joints						
Catch basins						
Safety equipment						
TOTAL						

File: cscivil

Table: _____

VILLAGE SEWAGE COLLECTION SYSTEM
CONSTRUCTION COST BREAKDOWN WORKSHEET
FOR CIVIL WORKS

BASIC DATA	
Name of pilot wastewater facility.....	_____
Type of collection system.....	_____
Length of network.....	_____
Design Flow.....	_____

Civil Works Cost Catagories	Cost of Local Purchase	Cost of Import Purchase	Total cost per item	Imported Items Cost % of Total	Item Cost Percent of Total for Civil Works
Excavation/repair					
Road work					
Removal of existing equip.					
Equipment rental					
Concrete work					
Insurance					
Site dewatering					
Moisture protection/isolation					
TOTAL					

120

ANNEX V

PILOT VILLAGE WASTEWATER FACILITY RECURRENT COSTS DATA WORKSHEETS AND SUMMARY TABLES

File:recur

Table: _____

TOTAL RECURRENT OPERATIONS COSTS FOR VILLAGE SEWERAGE SYSTEMS
(Data Collection Logic Table)

- **COLLECTION SYSTEM**
  - O&M Labor Worksheet for Sewage Collection network
  - Collection System Recurrent Operations Costs Worksheet (other than labor)
  - Collection System Recurrent Maintenance Costs Worksheet (other than labor)
- **SEWAGE PUMP STATION**
  - O&M Labor Worksheet for Sewage Pumping Stations
  - Pumping Station(s) Recurrent Operations Costs Worksheet (other than labor)
  - Pumping Station(s) Recurrent Maintenance Costs Worksheet
- **WASTEWATER TREATMENT PLANT**
  - O&M Labor Worksheet for Wastewater Plant Operations
  - Wastewater Plant Recurrent Operations Costs Worksheet (other than labor)
  - Wastewater Plant Recurrent Maintenance Costs Worksheet

File: Rcrtotal

Table: ____

VILLAGE SEWERAGE SYSTEM
TOTAL ANNUAL RECURRENT O&M COSTS
(INCLUDING COLLECTION SYSTEM, PUMP STATION, AND WASTEWATER PLANT)

BASIC DATA

Name of Pilot Wastewater Facility:.
Treatment Technology.....
Capacity of Facility (cu.M/day):...
Design Population:.....
Total cost of facility including
land, design, and construction:....

Sewerage System Annual Recurrent Cost Catagories	Monthly Costs	Annual Costs	Percent of Annual Total
Collection system Operations costs			
Collection system Maintenance costs			
Pump station Operations costs			
Pump station Maintenance costs			
Treatment plant Operations costs			
Treatment plant Maintenance costs			
TOTAL			

NOTE

See individual recurrent cost worksheets for cost breakdown by catagory

Comparison Item	Item Unit Value Compared to Total Annual Recurrent Cost for Operation of this Village Sewerage System
Design flow: cu.M/day	
Actual flow: cu.M/day	
Design population:	
Present population:	
Design No. of housholds to be connected:	
Present number of households connected:	
Household connection fee:	
Average household income:	

Table: ___

VILLAGE PILOT WASTEWATER FACILITY RECURRENT O&M COSTS
SUMMARY/COMPARISON TABLE

Village Wastewater System (Name/Tpye of facility)	Design Capacity	Annual Operat. Costs (a)	Annual Maintenance Costs (a)	Total Recurrent O&M Costs (a)	Total Recurrent O&M Costs Per 1000. cu.M/day of Design Flow	Total Cost to Implement WWTF (not incl. costs for access road)	Recurrent O&M Costs Percent of Total Cost of Facility Implementation
Meet El Tholy / SOAF							
Serw / SOAF							
Sharabas / SOAF							
Tafr El Batith / Ox. Ditch							
Tafr Soliman / Ox. Ditch							
Thyata / Oxidation Ditch							
Rahamna / Oxidation Ditch							
Tafr El Ghab / Aqualife							
Barashiya / Aqualife							
Tafr Saad / Aqualife							
Tom Alhdar / Aqualife							
Sahel Gawaber / Aqualife							
Dagahla / Aerated Lagoon							
Zanhaloun / Primary Treatmnt							
Aadliya / Stab. Pond							
Bolaq / Stab. Pond							
Balat / Stab. Pond							
Sharm El Sheith /Stab. Pond							
Dahab / Stab. Pond							
Neweiba / Stab. Pond							
Taba / Stab. Pond							

NOTES

(a) Includes costs for O&M of Collection System, Pump Station, and WWTF

File: Maintwwtp

Table: ____

RECURRENT MAINTENANCE COSTS FOR VILLAGE WASTEWATER TREATMENT PLANTS (Monthly/Yearly Summary Sheet)

BASIC DATA

Name of Pilot Wastewater Facility:.
Treatment Technology.....
Capacity of Facility (cu.M/day):...
Design Population:.....
Total cost of facility including
land, design, and construction:....

Individual Recurrent Cost Items for Wastewater Treatment Plant Maintenance	Monthly Costs	Annual Costs	Percent of Total Annual Recurrent O&M Costs for WWTP Operations
Lubricants			
Maintenance contractor			
Parts			
Road Maintenance			
Vehicle Maintenance			
Generator Maintenance			
Equipment Overhaul			
Modifications			
Yard Maintenance			
TOTAL			

NOTES

File: opswwtp

Table:

RECURRENT OPERATIONS COSTS
FOR VILLAGE WASTEWATER TREATMENT PLANTS
(Monthly/Yearly Summary Sheet)

BASIC DATA

Name of Pilot Wastewater Facility:.
Treatment Technology.....
Capacity of Facility (cu.M/day):...
Design Population:.....
Total cost of facility including
land, design, and construction:....

Individual Recurrent Cost Items for Wastewater Treatment Plant Operations	Monthly Costs	Annual Costs	Percent of Total Annual Recurrent O&M Cost for WWTP Operation
Electricity			
Fuel			
Chemicals			
Lubricants			
Telephone			
Direct Labor Total			
Operations contractor			
Sludge Disposal			
Insurance			
Supplies			
Sampling/Laboratory			
*Administration			
*Security			
Clothing/Uniforms			
TOTAL			

NOTES

* Included in total labor value

WASTEWATER TREATMENT PLANT OPERATIONS
DIRECT LABOR COSTS - REGULAR TIME

BASIC DATA

Name of Pilot Wastewater Facility:..... _____
Treatment Technology:..... _____
Capacity of Facility (average cu. meters/day):... _____
Design population:..... _____

Ocupation Title	No. Employed	Average Monthly Wage	% Time	Total
Superintendent				
Assistant Superintendent				
Operations Supervisor				
Shift Foreman				
Operator II				
Operator I				
Auto. Equipment Operator				
Maintenance Supervisor				
Maintenance Mechanic II				
Maintenance Mechanic I				
Laborer				
Storekeeper				
Custodian				
Chemist				
Laboratory Assistant				

MONTHLY SUBTOTAL _____
ANNUAL SUBTOTAL _____

Table:

RECURRENT MAINTEANACE COSTS
FOR VILLAGE SEWAGE PUMPING STATION(S)

Basic Data

Name of Pilot Wastewater Facility:.
Type of pumping station.....
Capacity of Facility (cu.M/day):...
Design flow.....

Individual Recurrent Maintenance Costs for Sewage Pumping Stations	Average Monthly Consumption	Yearly Consumption	Percent of Total Annual Recurrent Cost for Pump Station Operation
Civil Maintenance			
Equipment Maintenance			
Parts replacement			
Supplies			
Tools			
Special labor costs			
Maintenance contractor(s)			
Vehicle maintenance			
Road maintenance			
Generator Maintenance			
Electrical Maintenance			
TOTAL			

NOTES

File: opsps

Table: ____

RECURRENT OPERATIONS COSTS
FOR VILLAGE SEWAGE PUMPING STATION(S)

Basic Data

Name of Pilot Wastewater Facility:.. _____
Treatment Technology..... _____
Capacity of Facility (cu.M/day):... _____
Design Population:..... _____
Total cost of facility including
design, land, and construction:.... _____

Individual Recurrent Operations Costs for Sewage Pumping Stations	Average Monthly Cost	Yearly Cost	Item Percent of Total Annual Recurrent Cost for Pump Station Operation
Electricity			
Fuel			
* Labor			
Supplies			
Tools			
Water			
Insurance			
TOTAL			

NOTES

* See pump station labor worksheet for breakdown of labor costs

Table:

VILLAGE SEWAGE PUMP STATION(S) OPERATION
DIRECT LABOR COSTS - REGULAR TIME

BASIC DATA
Name of Pilot Wastewater Facility:.....
Type of pumping station.....
Capacity of Facility .....
Design flow.....

Ocupation Title	No. Employed	Average Monthly Wage	% Time	Total
Operations Supervisor				
Shift Foreman				
Operator II				
Operator I				
Auto. Equipment Operator				
Maintenance Supervisor				
Maintenance Mechanic II				
Maintenance Mechanic I				
Laborer				
Storekeeper				
Custodian				

MONTHLY SUBTOTAL _____

ANNUAL SUBTOTAL _____

Table: ____

RECURRENT OPERATIONS COSTS
FOR VILLAGE SEWAGE COLLECTION SYSTEM

Basic Data

Name of Pilot Wastewater Facility:.. _____
Treatment Technology..... _____
Capacity of Facility (cu.M/day):... _____
Design Population:..... _____
Total cost of facility including
design, land, and construction:.... _____

Individual Recurrent Operations Costs for Sewage Collection System	Average Monthly Cost	Yearly Cost	Item Percent of Total Annual Recurrent Cost for Sewage Collection System Operations
* Labor			
Fuel for vehicles			
Supplies			
Tools			
TOTAL			

NOTES

* See Collection System labor worksheet for breakdown of costs

Table: _____

VILLAGE WASTEWATER COLLECTION SYSTEM OPERATION
DIRECT LABOR COSTS - REGULAR TIME

BASIC DATA	
Name of Village Pilot Wastewater Facility:.....	_____
Treatment Technology:.....	_____
Capacity of Facility (average cu. meters/day):...	_____
Design population:.....	_____

Ocupation Title	No. Employed	Average Monthly Wage	% Time	Total
Operations Supervisor				
Auto. Equipment Operator				
Maintenance Supervisor				
Maintenance Mechanic II				
Maintenance Mechanic I				
Laborer				
Storekeeper				
			LABOR TOTAL	

MONTHLY SUBTOTAL _____

ANNUAL SUBTOTAL _____

ANNEX VI

OUTLINE FOR FINAL EVALUATION REPORT FOR THE
LOCAL DEVELOPMENT II/P PILOT VILLAGE WASTEWATER PROGRAM

TABLE OF CONTENTS

Page No.

SUMMARY.....

1. INTRODUCTION .....

2. BACKGROUND AND OBJECTIVES .....

3. THE COMPONENT PILOT ACTIVITIES - a brief explanation/status of the pilot activities.....

3.1 Extended Aeration Plants..... .....
3.2 Primary treatment .....
3.3 Aerated lagoons .....
3.4 Oxidation ditch .....
3.5 Waste stabilization ponds .....
3.6 "Aqualife" treatment process .....

4. PROCESS EVALUATION; .....
(a discussion of the seven implementation steps required for establishing village wastewater facilities)

4.1 Project Implementation Steps Evaluation.....

4.2 Step One - Planning for Village Wastewater Projects .....
(project needs assessment)

4.2.1 Purpose of needs assessment .....
4.2.2 Procedure for completing a needs assessment ....
4.2.3 Experience/Case studies .....

4.3 Step Two - Engineering Study (How to select a consultant).

4.3.1 Purpose of an engineering study .....
4.3.2 Procedure for selecting a consultant .....
4.3.3 Experience/Case studies .....

4.4 Step Three - Project Design Review (a 3-step process) ....

4.4.1 Purpose of project design review .....
4.4.2 Procedure for completing a design review .....
4.4.3 Experience/Case studies .....

4.5 Step Four - Contract Tender, Award, and Construction ....

4.5.1 Fundamentals of project contracting .....
4.5.2 Procedure for contracting a project .....
4.5.3 Contracting experience/case studies .....
4.5.4 Fundamentals of construction supervision .....
4.5.5 Procedure for performing construction supervision.....
4.5.6 Construction experience/case studies .....

TABLE OF CONTENTS con'd

4.7 Step Five - Operation and Maintenance Considerations During the Construction Phase .....

4.7.1 Importance of addressing O&M during the construction phase .....
4.7.2 Essential O&M steps during construction phase ..
4.7.3 Experience/Case studies .....

4.8 Step Six - Project Final Acceptance and Start-up .....

4.8.1 Contractor and owner responsibilities .....
4.8.2 Guidelines to follow during final acceptance and start-up . .....
4.8.3 Experience/Case studies .....

4.9 Step Seven - Facility Operations .....

4.9.1 Importance of establishing and maintaining good operations .....
4.9.2 Key elements of a good operations program .....
4.9.3 Experience/Case studies .....

5. PRODUCT EVALUATION; Discussion and assessment of the 21 village pilot wastewater facilities.....

5.1 Product Evaluation .....

5.2 General Factors Affecting Choice of Technology .....

5.2.1 Physical environment .....
5.2.2 Ease of construction .....
5.2.3 Local production of facility components .....
5.2.4 Operations requirements .....
5.2.5 Technology process characteristics .....
5.2.6 Community needs and expectations .....

TABLE OF CONTENTS con'd

5.2 Presentation of Evaluation Data.....

5.3 Performance [illegible]

5.3.1 Extended aeration treatment facilities:
- Meet El Kholy
- Serw
- Sharabas

5.3.2 Primary treatment facilities:
- Zankaloon

5.3.3 Oxidation ditch treatment facilities:
- Kafr El Batikh
- Kafr Soliman
- Khyata
- Rahamna

5.3.4 Aerated lagoon facility
- Daqahla

5.3.5 "Aqualife" treatment facilities
- Kafr El Ghab
- Barashiya
- Kafr Saad El Balad
- Kom Akhdar
- Sahel Gawaber

5.3.6 Stabilization pond facilities
- Bolaq
- Balat
- Sharm El Sheikh
- Dahab
- Neweiba
- Taba

move to Sec. (7)

5.4 Physical Comparison of Pilots (data summary tables and discussions) .....

5.4.1 Land requirements .....
5.4.2 Ease of construction .....
5.4.3 Local production of facility components .....
5.4.4 Operation requirements .....
5.4.5 Technology process characteristics .....
5.4.6 Total costs of each pilot W.W. facility .....

6. ECONOMIC COMPARISON OF THE SIX TECHNOLOGIES DEMONSTRATED.....

6.1 Economic Comparison Methodology .....

6.2 Define the problem of economic choice

6.3 Set out the available data, state the assumption made and assess the reliability which should be attached to them.

6.4 Make the calculations

6.5 Interpret the results of the calculations and where necessary modify them on the basis of judgement to allow for factors not taken into account in the formula used.

136

TABLE OF CONTENTS con'd

7. DETERMINING THE "CHOICE SET" (key points for a national plan)

7.1 Selection criteria

7.2 Problems of coverage and time-phasing

7.3 Implications for the local manufacturing sector

7.4 Fiance options (preliminary)

ANNEXES

ANNEX I Terms of Reference for Selecting a Consultant to Perform an Engineering Study

ANNEX II Guidelines for Performing a Design Review of a Wastewater Project

ANNEX III Construction Supervision Standard Report Forms

ANNEX VII

LD-II/P ENVIRONMENTAL ENGINEERING TRAINING PROGRAMS
PLANNED FOR 1989-1992

Environmental Engineering
Training Programs
(1989-1992)

Code	Course Title	Duration	Trainers	No. of Trainees 1988-1992	Schedule
EE01	Inventory course	1 week	EEG	100	1989-1990
EE02	Design of sewerage (basic level)	2 weeks	contract	100	1990
EE03	Design of sewerage (advanced level)	2 weeks	contract	100	1990
EE04	Design of wastewater treatment systems (basic level)	2 weeks	contract	100	1989
EE05	Design of wastewater treatment systems (intermediate level)	2 weeks	contract	100	1990
EE06	Design of wastewater treatment systems (advanced level)	2 weeks	contract	50	1991
EE07	Feasibility studies seminars	2 days	EEG	100	1989-1990
EE08	Feasibility studies course	2 weeks	EEG	100	1990-1991
EE09	Grand Tour - Construction of wastewater projects	3 days	Kawata	20	1989
EE10	Construction supervision of ww projects (basic level)	2 weeks	EEG	100	1989-1990
EE11	Construction management (advanced course)	2 weeks	contract	100	1990-1991
EE12	O&M of sewerage systems (basic course)	2 weeks	EEG	300	1989-1992
EE13	O&M of sewerage systems (advanced course)	2 weeks	EEG	300	1989-1992
EE14	O&M of ww treatment plants (basic course)	2 weeks	EEG	300	1989-1992
EE16	Lab. Testing	2 weeks	contract	20	1990-1992
EE17	Special topics course series	According to	contract	50	to be planned

VILLAGE WASTEWATER PROJECT TYPES

(Projections 1984 - 1992)

(Cumulative numbers)

Project Type	1984 No. of Projects	1984 No. of Gov'ts	1984 Approx. Alloc. LE (000)	1988 No. of Projects	1988 No. of Gov'ts	1988 Approx. Alloc. LE (000)	1989 No. of Projects	1989 No. of Gov'ts	1989 Approx. Alloc. LE (000)	Extra Work (1989-1992) No. of Projects	Extra Work (1989-1992) No. of Gov'ts	Extra Work (1989-1992) Approx. Alloc. LE (000)	1992 No. of Projects	1992 No. of Gov'ts	1992 Approx. Alloc. LE (000)
1. Studies:															
1.1 ww projects	-	-	-	10	10	250	20	10	500	(30	15	1,000)	50	15	1,550
1.2 ground water lowering projects	-	-	-	2	2	50	5	3	125	(15	5	600)	20	8	400
1.3 ww sector studies	-	-	-	-	-	-	1	1	80	(9	9	720)	10	10	800
2. Conveyance:															
[illegible] ..ge sewerage system	14	1	2,000	21	4	5,000	23	5	5,500						
2.2 village ground water collection system	20	3	4,000	25	5	5,000	25	5	5,000						
2.3 village-to-city connected system	-	-	-	1	1	500	3	1	1,500						
3. Treatment:															
3.1 primary treatment	-	-	-	1	1	200	1	1	200						
3.2 stabilization ponds	-	-	-	1	1	250	3	2	750						
3.3 Aerated lagoons	-	-	-	1	1	300	1	1	300						
3.4 Aqualife system	-	-	-	5	2	2,500	5	2	2,500	25	10	14,000	40	10	20,000
3.5 Oxidation ditches	-	-	-	3	1	3,000	4	1	3,500						
3.6 Extended aeration	-	-	-	1	1	600	1	1	600						
3.7 Other methods	-	-	-	-	-	-	-	-	-						
4. Communal Composting Plant:	-	-	-	-	-	-	1	1	100	(9	5	209)	10	5	1,000
5. Health Awareness Programs:	-	-	-	-	-	-	3	1	-	(47	15	500)	50	15	500

PROJECTION OF TRAINING NEEDS

(1988 - 1992)

Governorate	Engineers: Design/Construction Engineers		Engineers: O&M Engineers		Technicians: Pumping Stations	Technicians: Treatment Plants
	1988	1992*	1988	1992*	1988	1992
Damietta	5		1		10	
Menufiya	4		3		12	
Sharqiya	3		-		-	
Daqahliya	10		4		30	
Qalubiya	4		-		-	
Beheira	4		-		-	
Kafr El Sheikh	3		-		-	
Gharbiya	4		-		-	
Giza	4		-		-	
Ismailia	2		-		-	
Beni Suef	2		-		-	
Minya	2		-		-	
Fayoum	2		-		-	
S. Sinai	2		-		-	
New Valley	2		-		-	
Total	53	100	8	40	52	400