PD-ABE-368
77933

# TRIP REPORT ON VISIT TO

## PETROMIDIA S.A.
## REFINERY-PETROCHEMICAL COMPLEX
## IN CONSTANTA, ROMANIA

April 25 - May 9, 1992

Prepared by:

MALCOLM PIRNIE, INC.
4162A Canal Street
New Orleans, LA 70119
(504) 482-4800

Prepared for:

WORLD ENVIRONMENT CENTER
419 PARK AVENUE SOUTH
SUITE 1800
NEW YORK, NEW YORK 10016

July 1992

## DISCLAIMER

The opinions expressed herein are the professional opinions of the author and do not represent the official position of the Government of the United States or the World Environmental Center.

## TABLE OF CONTENTS


Page

SUMMARY

1.0 INTRODUCTION . . . . . 1-1
- 1.1 Purpose . . . . . 1-1
- 1.2 Acknowledgement . . . . . 1-1
- 1.3 Location . . . . . 1-1
- 1.4 Plant Description . . . . . 1-1
- 1.5 Wastewater Treatment Facilities . . . . . 1-2
- 1.6 Other Studies . . . . . 1-3

2.0 FINDINGS . . . . . 2-1
- 2.1 Romania Environmental Regulations . . . . . 2-1
- 2.2 Wastewater Treatment Plant Flows and Characteristics . . . . . 2-1
  - 2.2.1 General . . . . . 2-1
  - 2.2.2 Navodari Municipal Flows . . . . . 2-2
  - 2.2.3 Refinery Flows . . . . . 2-2
  - 2.2.4 Petrochemical Flows . . . . . 2-3
  - 2.2.5 Groundwater Recovery System Flows . . . . . 2-3
  - 2.2.6 Surface Drainage Collection System Flows . . . . . 2-3
  - 2.2.7 Total Flow . . . . . 2-4
- 2.3 Wastewater Treatment Plant (WWTP) . . . . . 2-4
  - 2.3.1 Primary Treatment Facilities . . . . . 2-5
  - 2.3.2 Secondary Treatment . . . . . 2-7
  - 2.3.3 Tertiary Treatment . . . . . 2-8
  - 2.3.4 Sludge Handling Facilities . . . . . 2-9
  - 2.3.5 Existing Facilities . . . . . 2-9
- 2.4 Conclusion . . . . . 2-10

3.0 RECOMMENDATIONS . . . . . 3-1
- 3.1 Approach . . . . . 3-1
- 3.2 Program Development . . . . . 3-1
- 3.3 Detailed Recommendations - Immediate Action Program . . . . . 3-3
  - 3.3.1 Plant Improvement . . . . . 3-4
  - 3.3.2 Primary Treatment Modifications . . . . . 3-4
  - 3.3.3 Secondary Treatment Modifications . . . . . 3-7
  - 3.3.4 Tertiary Treatment Modifications . . . . . 3-8
  - 3.3.5 Sludge Handling Modifications . . . . . 3-8
  - 3.3.6 Facilities Rehabilitation . . . . . 3-9
  - 3.3.7 Costs . . . . . 3-9

## TABLE OF CONTENTS
(Continued)

### LIST OF FIGURES


| Figure No. | Description | Following Page |
|---|---|---|
| 1 | Wastewater Treatment Plant Site Plan | 2-4 |
| 2 | WWTP Existing Flow Schematic | 2-4 |
| 3 | WWTP Proposed Flow Schematic | 3-4 |


### LIST OF TABLES


| Table No. | Description | Following Page |
|---|---|---|
| 1 | Wastewater Treatment Plant Averages - 1991 | 2-1 |
| 2 | Wastewater Treatment Plant Unit Descriptions | 2-4 |


### LIST OF APPENDICES


| Appendix | Description |
|---|---|
| A | Itinerary |
| B | Names and Addresses of Persons Contacted |
| C | List of Documents Received |
| D | Plant Perimeter Slurry Trench |
| E | Refinery Plot Plan |
| F | Refinery Block Diagram |
| G | Petrochemical Plant Block Diagram |
| H | 1991 Summary of Functional Unit Processes |
| I | C. Malchow Resume |

## LIST OF ABBREVIATIONS

| | | |
|---|---|---|
| bbl | - | barrels |
| BOD | - | Biochemical Oxygen Demand |
| Cap | - | Capita |
| COD | - | Chemical Oxygen Demand |
| d | - | day |
| D | - | Depth |
| gal | - | gallons |
| h | - | hours |
| hr | - | hours |
| Km | - | Kilometers |
| L | - | Length |
| m | - | meters |
| $M^3$ | - | Cubic Meters |
| MM | - | Millimeters |
| $m^3/h$ | - | Cubic Meters Per Hour |
| MGD | - | Million Gallons Per Day |
| mg/l | - | milligrams/liter |
| $m^2$ | - | Square Meters |
| sf | - | Square Foot |
| $S^{-2}$ | - | Sulfides |
| TSS | - | Total Suspended Solids |
| W | - | Width |
| WWTP | - | Wastewater Treatment Plant |
| yr | - | year |

# EXECUTIVE SUMMARY

The World Environmental Center (WEC) International Environmental Development Services (IEDS) contracted Malcolm Pirnie, Inc. to provide an expert to review and assess existing facilities and proposed conceptual plans for upgrading the wet stream and solid handling systems for the wastewater treatment facilities at the Petromidia Refinery-Petrochemical Complex located in the vicinity of Constanta, Romania. The mission was conducted between April 25 and May 9, 1992 by Mr. Clark Malchow of Malcolm Pirnie's New Orleans, Louisiana office.

The Petromidia Refinery - Petrochemical complex, hereinafter referred to as "the complex", is located on a 275 hectare site, is owned by the Romanian government and consists of an oil refinery, petrochemical plant, power plant, water treatment plant, and wastewater treatment plant. The complex, which was built in 1978, was shutdown in September 1991 for expansion, upgrading and maintenance. The refinery was scheduled to start up during May 1992, and the petrochemical plant will follow at a later date. The refinery produces a variety of fuels and aromatics that will be used at the petrochemical plant as feedstock and for export.

The wastewater treatment plant (WWTP) receives primary treated municipal wastewater from the nearby city of Navodari, waste flows from the refinery and petrochemical plants, and surface drainage and contaminated groundwater from the complex site. The refinery and petrochemical waste flows receive primary treatment and are then combined with the municipal wastewater prior to secondary and tertiary treatment. The effluent is discharged into a lagoon for effluent polishing and is then discharged to the Black Sea. The WWTP was originally designed for 6,800 $m^3/h$ (44.4 mgd) and average plant flows are approximately 1,600 $m^3/h$ (10.2 mgd).

It was found that the existing WWTP was designed for considerably higher flows than it is currently treating. In addition, the treatment process includes many treatment steps not normally found in this type of treatment facility. The condition of the facility is poor and is deteriorating rapidly. The WWTP is currently not meeting treatment goals due to systems that are either not functional or barely operable. Treatment is provided by physical/chemical process only and the biological processes are not performing. The solids handling systems are deteriorated, with several units not operating. An incineration system designed to burn the sludge is inoperable and has not been used since the start up of the complex. The existing WWTP is oversized, too complex, in poor condition and not meeting the treatment goals.

It is recommended that a two-phase approach be taken to overhaul and upgrade the WWTP necessary to meet treatment goals set by the Romanian government. The approach would consist of an **immediate action program** and a **long term improvement program**.

**The immediate action program** should make interim modifications that will improve WWTP performance, while simplifying treatment processes and reducing maintenance and operation burdens on the WWTP staff. **The long term program**, which should be developed in parallel with the implementation of the immediate action program, would begin with the development of a comprehensive plan that would make an assessment of existing and future conditions, identify factors critical to the project design, identify and evaluate options, select a recommended plan and provide a preliminary design of the selected plan along with a management plan to complete the project.

Detailed recommendations for the immediate action program are given and several major improvements are suggested to improve the performance of the WWTP. It is important to understand that the program recommended herein is based on one site inspection and a limited amount of data. The program should be flexible and revised as more information becomes available. Grit and floatables are a major cause of equipment and system failures and should be removed from the wastewater as soon as possible. Elimination of chemical conditioning and start up of secondary treatment should significantly reduce sludge production, another major cause of equipment and system failure. After these process modifications have been completed, the need for chemical conditioning should be re-evaluated. It seems that the WWTP was designed for much higher flows and as a result wastewater flows through the WWTP in slugs. The WWTP should be modified to process wastewater flows continuously. Implementation of the long term program would begin after completion of the comprehensive plan.

# 1.0 INTRODUCTION

## 1.1 PURPOSE

The World Environmental Center (WEC) International Environmental Development Services (IEDS) has a cooperative agreement with the United States Agency for International Development (USAID) to sponsor experts to provide technical services to countries located in Central and Eastern Europe. WEC contracted with Malcolm Pirnie, Inc. to provide an expert to inspect and evaluate the wastewater treatment facilities at the Petromidia Petrochemical Plant located in the vicinity of Constanta. The purpose of the mission was to review and assess existing facilities and proposed conceptual plans for upgrading wastewater treatment plant, focussing exclusively on the wastewater treatment plant's wet stream and solids handling systems.

The mission was conducted by Mr. Clark Malchow of Malcolm Pirnie's New Orleans, Louisiana office from April 25 through May 9, 1992.

## 1.2 ACKNOWLEDGEMENT

The Environmental Department and the staff of the wastewater treatment plant and laboratory of the Petromidia Complex are to be commended for their cooperation. Every request for information was met expeditiously.

## 1.3 LOCATION

Petromidia Refinery-Petrochemical Complex, hereinafter referred to as "the complex" is located on an approximately 275-hectare site between the Black Sea Canal and Lake Tasaul approximately 15 km north of the City of Constanta, and 200 km east of Bucharest. The City of Navodari is located adjacent to the west boundary of the plant site.

## 1.4 PETROMIDIA REFINERY-PETROCHEMICAL COMPLEX DESCRIPTION

The complex is owned by the Romanian government and consists of an oil refinery, petrochemical plant, power plant, water treatment plant and a wastewater treatment plant. It is our understanding that the complex will be privatized and the refinery products will only be used as raw material for the petrochemical plant and for export.



-3-

The complex was built in 1978 and it operated until September 16, 1991 at which time it was shut down for expansion, upgrading, and for overall maintenance. The refinery was scheduled to re-start on or around May 8, 1992. The petrochemical plant will follow at a later date. It is estimated that the complex will employ approximately 5,000 persons when in operation.

Capacity of the refinery complex is being increased from 3,800,000 metric tons/yr (60,000 bbl/day) to 6,000,000 metric tons/yr (100,000 bbl/day). The refinery will produce the following products:

| | |
|---|---|
| propane | gasoline |
| butane | propylene |
| isobutane | naphtha |
| toluene | raffinate |
| benzene | jet fuel |
| fuel gases | kerosene |
| sulfur | diesel oil |
| ethylbenzene | fuel oil |
| p-xylene | coke |
| o-xylene | |

The petrochemical plant will use refinery feedstock and produce:

| | |
|---|---|
| propylene | ethylbenzene |
| polypropylene | monoethylene glycol |
| high-density polyethylene | diethylene glycol |
| low-density polyethylene | triethylene glycol |
| ethylene oxide | pyrolysis gasoline |
| benzene, toulene, xylene concentrate | pyrolysis fuel oil |
| dimethyl tarephthate | |

A refinery plot plan and block diagram and a petrochemical plant block diagram are attached in Appendices E, F and G. Also the plant process units in operation are shown in Appendix H.

## 1.5 WASTEWATER TREATMENT FACILITIES

The wastewater treatment plant (WWTP) receives municipal wastewater from the City of Navodari, waste flow from the oil refinery and petrochemical plant, and surface drainage and contaminated groundwater from the refinery and petrochemical sites. Primary treatment of the wastewater from the City of Navodari is provided at a remote site. Treatment facilities include



41

screening, primary settling tanks, and effluent pumps to transfer the primary effluent to the WWTP. The Petromidia Complex wastewater treatment plant includes treatment facilities for the industrial wastes which are combined with the municipal wastewater prior to secondary and tertiary treatment. The effluent is then directed to a lagoon for polishing before it is discharged into the Black Sea.

## 1.6 OTHER STUDIES

An environmental audit was conducted at the plant site between July 10 and September 15, 1991 by Société d'Etudes Techniques, Ingeniur Consent, France. The results of the audit were presented in a report titled "Environmental Study" dated August - September 1991 and hereafter referred to as "The Environmental Study".

# 2.0 FINDINGS

## 2.1 ROMANIA ENVIRONMENTAL REGULATIONS

Discharge limits for the wastewater treatment plant were negotiated with the Romanian government, resulting in a contract that set the following limits for the 1976 - 1980 period.

| | |
|---|---|
| $BOD_5$ | 15 mg/L |
| COD | 150 mg/L |
| Oil | 5 mg/L |
| Phenol | 1 mg/L |
| Sulfide | 0.3 mg/L |
| TSS | 40 mg/L |
| TDS | 1,000 mg/L |
| pH | 6.5 - 7.5 |
| Temperature | 30°C |

The contract has not been renewed since 1980 and we understand that the plant is not being legally operated within the protection of a discharge contract. There is pressure by the Romanian government to operate the wastewater treatment plant within the limits of the 1976 - 1980 contract.

## 2.2 WASTEWATER TREATMENT PLANT FLOWS & CHARACTERISTICS

### 2.2.1 General

Existing wastewater flows and characteristics are shown on Table 1. It should be noted that the refinery and petrochemical plants were shut down September, 1991 and the wastewater flows from these facilities after shutdown were from the groundwater recovery system, storm drainage and wash water only. Based on the Environmental Study, influent flows prior to the shutdown were as follows:

| | |
|---|---|
| Refinery Flow | 1000 $m^3/h$ |
| Petrochemical Flow | 600 $m^3/h$ |
| Navodari Flow | 800 $m^3/h$ |
| TOTAL | 2400 $m^3/h$ (15.2 mgd) |

Based on Table 1, for the period of January through September 1991 flows averaged approximately 1600 $m^3/h$.

# TABLE 1 - WASTEWATER TREATMENT PLAN[illegible]VERAGE FLOWS AND CHARACTERISTICS - 1991

| MONTH/ PARAMETERS | FLOW $M^3$/HR. | | PLANT INFLUENT | | | | | | PLANT EFFLUENT | | | | | | EFFLUENT TO BLACK SEA | | | | | |
|---|---|---|---|---|---|---|---|---|---|---|---|---|---|---|---|---|---|---|---|---|
| | | | pH | OIL | $S^{-2}$ | TSS | COD | $BOD_5$ | pH | OIL | $S^{-2}$ | TSS | COD | $BOD_5$ | pH | OIL | $S^{-2}$ | TSS | COD | $BOD_5$ |
| JANUARY '91 | 1595 | R | 7.2 | 610 | 24.6 | 239 | 779 | 233 | 8.7 | 9.8 | 4.8 | 102 | 504 | 240 | 6.9 | 6.7 | 3 | 55 | 332 | 143 |
| | | P | 7.5 | 196 | 3.6 | 117 | 1400 | 539 | | | | | | | | | | | | |
| | | M | 6.8 | 21 | 2.6 | 269 | 440 | 140 | | | | | | | | | | | | |
| FEBRUARY ' 91 | 1462 | R | 7.0 | 2935 | 8.0 | 200 | 385 | 82 | 8.6 | 8.5 | 2.3 | 95 | 168 | 65 | 7.0 | 5.2 | 1.2 | 30 | 143 | 41 |
| | | P | 7.0 | 575 | 2.3 | 130 | 650 | 700 | | | | | | | | | | | | |
| | | M | 6.8 | 14.2 | 3.2 | 107 | 275 | 70 | | | | | | | | | | | | |
| MARCH ' 91 | 1549 | R | 7.4 | 2000 | 32.9 | 189 | 453 | 135 | 8.6 | 5.16 | 14.9 | 62.8 | 166 | 56 | 7.0 | 2.85 | 3.8 | 39 | 131 | 41 |
| | | P | 7.05 | 205 | 4.3 | 309 | 504 | 263 | | | | | | | | | | | | |
| | | M | 7.0 | 13.7 | 5.6 | 180 | 285 | 75 | | | | | | | | | | | | |
| APRIL '91 | 1622 | R | 7.4 | 2813 | 20.3 | 204 | 735 | 300 | 8.9 | 4.4 | 5.8 | 62 | 255 | 67 | 6.8 | 2.2 | 1.8 | 36 | 196 | 47 |
| | | P | 7.9 | 8624 | 3.0 | 173 | 1041 | 410 | | | | | | | | | | | | |
| | | M | 6.9 | 11 | 3.8 | 155 | 277 | 114 | | | | | | | | | | | | |
| MAY '91 | 1556 | R | 7.3 | 1266 | 6.2 | 194 | | 82 | 8.8 | 4.5 | 2.3 | 89 | | 70 | 6.6 | 3.0 | 1.7 5 | 75 | | 21 |
| | | P | 7.0 | 606 | 1.8 | 162 | | 81 | | | | | | | | | | | | |
| | | M | 6.7 | 11 | 3.3 | 178 | | 49 | | | | | | | | | | | | |
| JUNE '91 | 1654 | R | 8.2 | 5808 | 66.3 | 217 | | 127 | 9.4 | 5.2 | 12.7 | 106 | | 39.9 | 8.4 | 4.9 | 3.4 | 55 | | 29 |
| | | P | 7.3 | 2498 | 5.1 | 167 | | 124 | | | | | | | | | | | | |
| | | M | 6.8 | 9.7 | 5.7 | 180 | | 55 | | | | | | | | | | | | |
| JULY '91 | 1572 | R | 8.6 | 576 | 38.0 | 213 | | 240 | 9.8 | 6.4 | 7.7 | 69 | | 55.5 | 7.7 | 4.7 | 2.4 | 54. 5 | | 31 |
| | | P | 7.5 | 30 | 2.8 | 142 | | 230 | | | | | | | | | | | | |
| | | M | 6.4 | 11.4 | 4.5 | 153 | | 84.5 | | | | | | | | | | | | |
| AUGUST '91 | 1817 | R | 8.2 | 363 | 31.8 | 179 | | 252 | 9.5 | 6.1 | 6.02 | 66 | | 74.6 | 7.3 | 4.6 | 2.8 7 | 42 | | 26 |
| | | P | 7.3 | 98 | 3.6 | 123 | | 216 | | | | | | | | | | | | |
| | | M | 6.9 | 11.1 | 4.1 | 129 | | 116 | | | | | | | | | | | | |
| SEPTEMBER '91 | 1650 | R | 7.9 | 531 | 24.8 | 159 | | 258 | 9.1 | 6.3 | 4.3 | 61 | | 66.4 | 7.1 | 4.9 | 2.4 | 54. 5 | | 83.8 |
| | | P | 6.5 | 267 | 3.02 | 151 | | 283 | | | | | | | | | | | | |
| | | M | 6.6 | 70.2 | 5.4 | 163 | | 164 | | | | | | | | | | | | |
| OCTOBER '91 | 1198 | R | 7.2 | 33 | 1.7 | 95 | | 284 | 7.6 | 6.1 | 1.8 | 122 | | 23.9 | 6.9 | 3.5 | 2.1 | 53 | 427 | 118 |
| | | P | 7.0 | 187 | 1.2 | 83 | | 235 | | | | | | | | | | | | |
| | | M | 6.9 | 10.5 | 2.1 | 218 | 1076 | 502 | | | | | | | | | | | | |
| NOVEMBER '91 | 1217 | R | 7.2 | 41.5 | 1.5 | 124 | | 143 | 7.7 | 6.8 | 1.7 | 78 | | 89.0 | 7.2 | 2.8 | 3.5 | 77 | | 52 |
| | | P | 7.0 | 35 | 1.6 | 143 | | 174 | | | | | | | | | | | | |
| | | M | 6.7 | 12.0 | 1.9 | 178 | | 207 | | | | | | | | | | | | |
| DECEMBER '91 | 1154 | R | 7.1 | 238 | 1.6 | 135 | | 249 | 7.9 | 13.1 | 0.76 | 95 | | 137 | 7.0 | 2.0 | 0 | 56 | | 112 |
| | | P | 7.0 | 86 | 1.0 | 133 | | 255 | | | | | | | | | | | | |
| | | M | 6.8 | 16.5 | 1.5 | 297 | | 205 | | | | | | | | | | | | |

## TABLE 1 (Continued) - WASTEWATER TREATMENT PLANT AVERAGE FLOWS AND CHARACTERISTICS - 1992

| MONTH/ PARAMETERS | FLOW $M^3$/HR. | | PLANT INFLUENT | | | | | | PLANT EFFLUENT | | | | | | EFFLUENT TO BLACK SEA | | | | | |
|---|---|---|---|---|---|---|---|---|---|---|---|---|---|---|---|---|---|---|---|---|
| | | | pH | OIL | $S^{-2}$ | TSS | COD | $BOD_5$ | pH | OIL | $S^{-2}$ | TSS | COD | $BOD_5$ | pH | OIL | $S^{-2}$ | TSS | COD | $BOD_5$ |
| JANUARY '92 | 1084 | R | 7.0 | 285 | 0.3 | 127 | | 210 | 7.5 | 7.9 | 0.18 | 96 | | 158 | 7.0 | 2.2 | 0.9 | 88 | | 66 |
| | | P | 6.7 | 37 | 0.7 | 117 | | 266 | | | | | | | | | | | | |
| | | M | 6.8 | 16 | 0.5 | 190 | | 159 | | | | | | | | | | | | |
| FEBRUARY ' 92 | 828 | R | 7.2 | 638 | 1.3 | 139 | | 183 | 8.0 | 5.4 | 0.8 | 75 | | 97 | 7.0 | 1.6 | 2.7 | 59 | | 59 |
| | | P | 6.9 | 89 | 1.0 | 117 | | 160 | | | | | | | | | | | | |
| | | M | 6.5 | 14 | 1.3 | 138 | | 174 | | | | | | | | | | | | |
| MARCH ' 92 | 1260 | R | 7.2 | 5006 | 0.7 | 115 | | 195 | 8.9 | 4.6 | 0.4 | 72 | | 57 | 7.0 | 2.5 | 0.2 | 56 | | 40 |
| | | P | 7.0 | 227 | 0.4 | 121 | | 194 | | | | | | | | | | | | |
| | | M | 6.8 | 12 | 0.5 | 143 | | 98 | | | | | | | | | | | | |

R = Refinery Flow
P = Petrochemical Flow
M = Municipal Flow

### 2.2.2 Navodari Municipal Flows

Navodari is a city of 35,000 to 40,000 persons located just to the west of the refinery. The City has a combined sewer system collecting both domestic wastewater and storm drainage. In addition, there is a large bakery and a sugar refinery located in Navodari. The sugar refinery operates only from October to late February. Limited data from October 1991 indicates that the sugar refinery can have a significant impact on Navodari wastewater strength. Estimated flow from Navodari is 800 $m^3/hr$ and based on a population of 40,000, this would amount to $0.02 m^3/hr/cap$ (127 gal/day/cap). This per capita flow appears very high and should be verified. A study should be performed to determine both flow quantity and characteristics for average daily dry weather and peak wet weather flows while the sugar refinery is in and out of operation.

### 2.2.3 Refinery Flows

Each of the individual flow components in the refinery were reviewed and an estimate of waste flows made from available data based on the expanded plant capacity as follows:

| | |
|---|---|
| Cooling tower | 95 $m^3/h$ |
| Boiler blowdown/power plant | 15 $m^3/h$ |
| Sanitary | 10 |
| Desalting unit | 85 |
| Process wash water | 85 |
| Total | 290 $m^3/h$ |

It should be noted that only cooling tower G1 discharges its blowdown to the WWTP. Two other cooling towers that serve the petrochemical plant discharge directly to the Black Sea. This overall practice should be reviewed. The refinery originally processed oil from Romanian wells with a relatively low sulfur content (0.3%) but is now refining oil from the Middle East with a higher sulfur content (3%). This may impact the refinery wastewater quality by increasing influent sulfide levels slightly.



- 9'

### 2.2.4 Petrochemical Flows

Wastewater flow from petrochemical plant was estimated to be approximately 60 percent of the refinery flow or 174 $m^3/h$.

### 2.2.5 Groundwater Recovery System Flows

The complex site elevation is approximately 2 meters above the Black Sea water level. Natural regional groundwater gradients are believed to be from Lake Tasaul towards the Black Sea. A 0.3-m wide slurry trench completely surrounds the complex and extends 6 meters below grade. A diagram of the groundwater containment trench is shown in Appendix D. The wall is not anchored into an impervious stratum since only sand is present in the upper portion of the overburden. The ground water elevation within the site is maintained at 1.5 meters below the Black Sea. Within the slurry wall are located eight (8) collection sumps equipped with two pumps. A network of perforated horizontal piping feeds into each collection sump. Each collection sump has a pumping capacity of 150 $m^3/h$ and pumps for $\pm$ 2 hrs/day. This equates to pumping 100 $m^3/h$ to the wastewater system.

Within the site there is a floating light non-aqueous phase on the groundwater. In addition, the upper layer of soil in the vadose zone contains significant levels of hydrocarbons, mainly from the catalytic cracker. The pumping system maintains groundwater levels below Black Sea water level which prevents any floating gas/oil in the groundwater from flowing into the Black Sea. The only pollutants that can reach the Black Sea from the site would be dissolved materials and materials heavier than water carried by the groundwater that exits from below the containment area.

### 2.2.6 Surface Drainage Collection System Flows

Area rainfall is approximately 378 mm/yr (14.9 in/yr). There are three (3) collection sumps in the petrochemical plant and four (4) in the refinery plant that collect surface water runoff and pump the surface drainage via a common header to the WWTP equalization tanks (Unit No. 103). If it is assumed that all the rainfall is collected by this system, the average flow rate would be 119 $m^3/h$. However, some of the rainfall will reach the groundwater and be captured by the groundwater recovery system; and some will be lost by evaporation. Therefore, the flow from this source would be less than the theoretical maximum. In any event this flow should only be nominally included as part of the average influent flow and should be considered only in determining peak flows. The Petromidia Environmental Department indicated that flow



-10

is normally contributed from this system; even during dry periods. While the flow of 10 $m^3/h$ is probably washwater it will be included in the average influent flow.

There is very little containment in the plant in critical areas. The coking unit and the sulfur storage area are all open to drain into the collection system. The desulfur gas unit and sulfur recovery area have leaks, that also drain into the collection system.

### 2.2.7 Total Flow

Based on review of available data, plant flows are estimated as follows:

| | |
|---|---|
| Refinery Flow | 290 $m^3/h$ |
| Petrochemical Flow | 174 $m^3/h$ |
| Navodari Flow | 800 $m^3/h$ |
| Groundwater Recovery | 100 $m^3/h$ |
| Storm Drainage | 10 $m^3/h$ |
| TOTAL AVERAGE FLOW | 1,374 $m^3/h$ (8.7 mgd) |

Between the period of January and August 1991, the plant influent flow averaged approximately 1600 $m^3/h$ (10.2 mgd), approximately 200 $m^3/h$ above the estimated flow. Flow reduction may be feasible. For purposes of this report an average daily flow of 1600 $m^3/h$ was used.

Flow records from the complex and WWTP do not correlate. The forcemains between the plant and WWTP may be corroded due to the high sulfide levels and should be tested for leakage.

## 2.3 WASTEWATER TREATMENT PLANT (WWTP)

The wastewater treatment plant was originally designed for a flow of 6,800 $m^3/h$ (44.4 mgd). Based on our initial investigations the actual wastewater flow is considerably less than the design flow, resulting in excess capacity. A site plan and schematic diagram of the existing WWTP wet stream unit process are shown as Figures 1 and 2, respectively. The number and size of unit processes are summarized in Table 2. The number of units available for operation are also shown in Table 2.

The WWTP employs, 60 operators and 40 maintenance persons. The maintenance staff is split evenly between routine and special maintenance functions. For the purposes of this report the WWTP has been subdivided in the following categories: primary treatment, secondary treatment, tertiary treatment, and sludge handling facilities.

# TABLE 2 - WASTEWATER TREATMENT PLANT UNIT DESCRIPTION

| UNIT NO. | NO. OF UNITS | NO. OF UNITS WKG. | UNIT DESCRIPTION | DIMENSIONS (M) | | | DIMENSIONS (M) | | REMARKS |
|---|---|---|---|---|---|---|---|---|---|
| | | | | W | L | D | $\phi$ | D | |
| 101 | 4 | 4 | Grit Tanks | 5 | 6 | 4 | - | - | |
| 102 | 8 | 1 | Oil-Water Separators | 7.5 | 45 | 3.8 | - | - | |
| 103 | 10 | 6 | Equalization Tanks | - | - | - | 45 | 4 | |
| | 4 | ? | Intermediate Pump Station | - | - | - | - | - | Each Pump 2,400 $m^3/h$ |
| 105 | 2 | 1 | Coagulation/Flocculation Basins | 3.5 | 13 | 3.5 | - | - | |
| 106 | 4 | 1 | DAF - Pressure Tanks | - | - | - | - | - | |
| 107 | 3 | 2 | DAF - Flotation Clarifers | - | - | - | 45 | 4 | |
| 108 | 2 | 2 | pH Adjustment Tanks | - | - | - | - | - | |
| 110 | 24 | 0 | 1st Aeration Tanks | 20 | 20 | 4 | - | - | |
| 111 | 3 | 1 | 1st Stage Sec. Clarifers | - | - | - | 45 | 4 | |
| 112 | 1 | 1 | Oil Recirculator Pump | - | - | - | - | - | |
| 113 | 16 | 0 | 2nd Stage Aeration Tanks | 20 | 20 | 4 | - | - | |
| 114 | 3 | 3 | 2nd Stage Sec. Clarifers | - | - | - | 45 | 4 | |
| 117 | 2 | 0 | Amestic Basins | - | - | - | -- | - | |
| 118 | 2 | 0 | Solid Contact Tanks | - | - | - | 45 | 5 | |
| 119 | 4 | ? | Effluent Pump Station | - | - | - | - | - | Each Pump - 2,400 $m^3/h$ |
| 120 | 5 | 5 | Oil Water Separators | - | - | - | - | - | |
| 121 | 4 | 4 | Slop Oil Storage Tanks | - | - | - | - | - | |
| 125 | 6 | 1 | Thickeners | - | - | - | 20 | 4.2 | |
| 130 | 1 | 1 | Plant/Domestic Mix Tank | - | - | - | - | - | |
| 131 | 1 | 1 | Black Sea Lagoon | 240 | 800 | 2.5 | - | - | |
| 132 | 4 | 3 | PF Filters | - | - | - | - | - | |
| 133 | 6 | 0 | Incinerators | - | - | - | - | - | |
| 134 | 2 | 2 | Municipal Settling Tanks | 7.5 | 45 | 3.8 | | | |

12

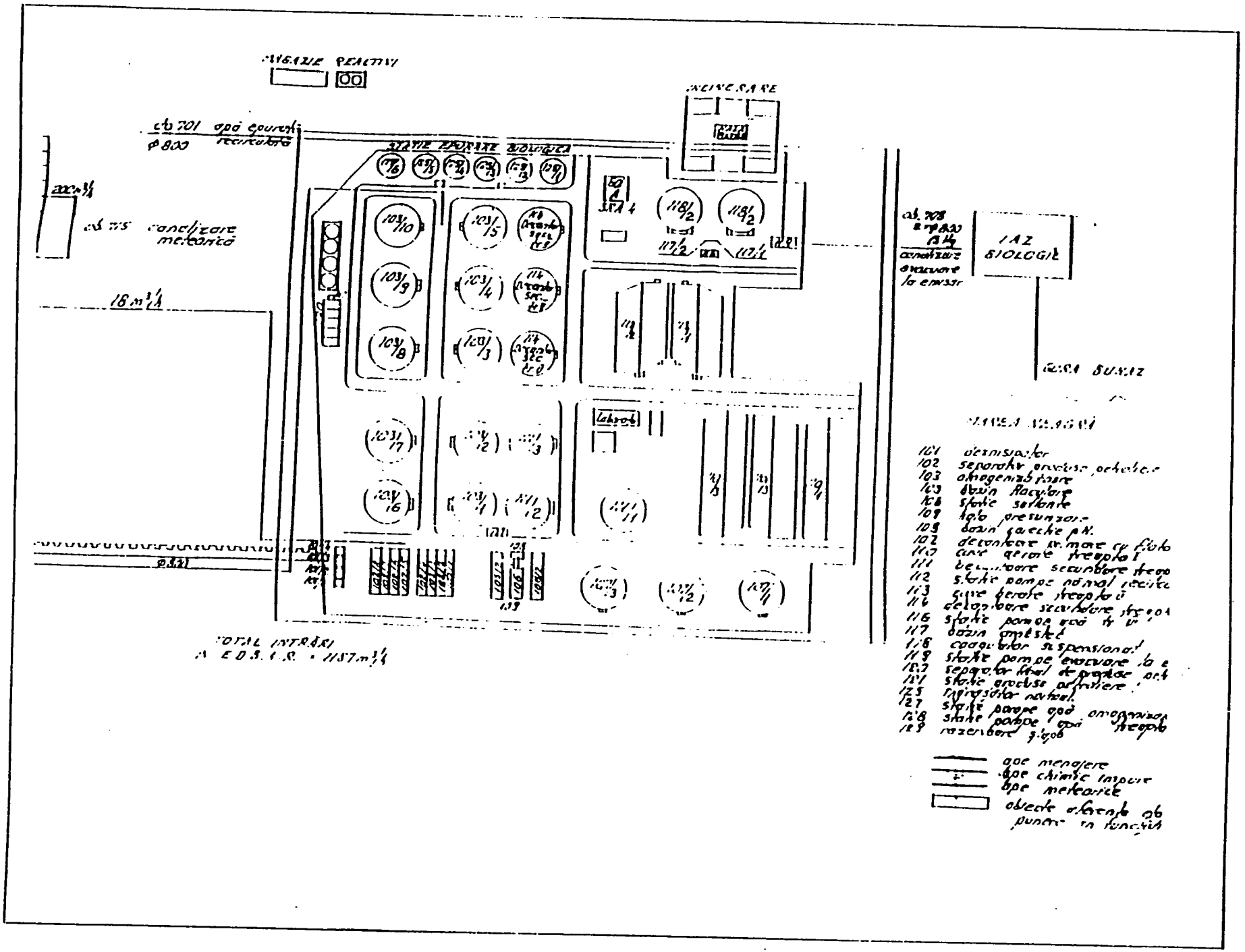


**FIGURE 1**

WASTEWATERTREATMENT PLANT SITE PLAN

# PETROMIDIA WASTEWATER TREATMENT PLANT

## EXISTING FLOW SCHEMATIC

FIGURE 2

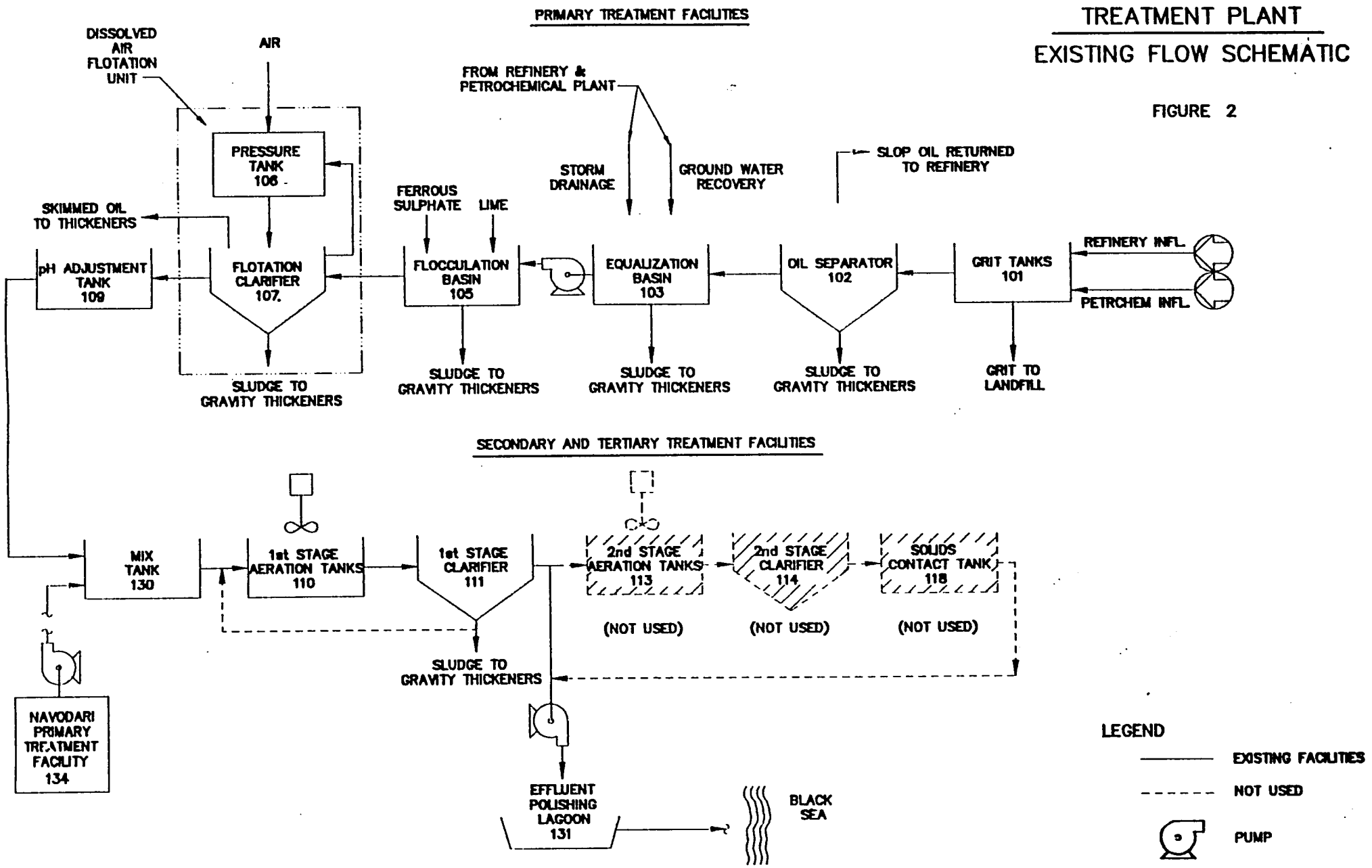

### 2.3.1 Primary Treatment

**A. General**

The primary treatment facilities are designed to treat all flows from the refinery and petrochemical plant before they are combined with municipal flow from the City of Navodari and sent to secondary treatment. As outlined previously, flows from the complex consist of process waste flows, ground water recovery flows and storm drainage. Groundwater and surface water drainage is combined with process waste flows in the equalization tanks. Process waste flows are passed through separators before they are pumped to the WWTP.

**B. Grit Tanks (Unit No. 101)**

Tanks 101/1 and 101/2 handle petrochemical plant flows and tanks 101/3 and 101/4 handle refinery flows. Grit has accumulated in these tanks up to 0.3 to 0.6 meters below the water surface. Grit must be removed by hand and trucked to a landfill. These tanks should be upgraded. Tank geometry would lend itself to the installation of an aerated grit removal system. Also equipment to facilitate grit removal and truck loading for disposal to a landfill should be provided.

**C. Oil Separator Tanks (Unit No. 102)**

This system is arranged similarly to the grit tanks in that four (4) tanks are dedicated to the refinery flows and the other four tanks are dedicated to petrochemical plant flows. Of the eight tanks available only tank 102/8 is operable. The other tanks are inoperable for various reasons, e.g., fire and traveling bridge breakdown or collapse. The rotary skimmer was not removing oil on Unit 102/8. All of these units need to be returned to working order. Settled sludge is transferred to the gravity thickener while slop oil is transferred to Unit No. 120 and returned to the refinery where it is reclaimed.

**D. Equalization Tanks (Unit No. 103)**

There are a total of ten circular equalization basins. Each tank has a volume of 6,360 $m^3$. Each tank is equipped with a rotating bridge type sludge collector mechanism that spans half the diameter of the tank. The mechanism rotates about a center column and is peripherally driven. In general, skimming and scraper systems need reworking. Bridge drive units for tanks 103/3, 103/4, 103/8, and 103/9 are inoperable. The influent is fed peripherally through a trough. The effluent is drawn out from 3m below the surface. Sludge is raked to a center sump and pumped to the thickener. Petrochemical and refinery waste flows are combined with the groundwater recovery and storm drainage flows in these tanks. Normally, a minimum number of the tanks are in operation, the majority should remain empty to be used to dampen flow rates during periods of rainfall.

**E. Intermediate Pump Station (Unit 109)**

Flow is pumped from the equalization tanks to the coagulation/flocculation tanks and continues through the remainder of the plant by gravity. The pump station includes four (4) 2,400 $m^3/h$ pumps. Since average daily flow is lower than the capacity of one pump, one pump is normally operated intermittently to pump flow through the remainder of the plant.

**F. Coagulation/Flocculator Basin (Unit No. 105)**

There are two dual-basin tanks to coagulate and flocculate the wastewater. Ferrous sulfate ($FeSO^4$ $7H_2O$) serves as a coagulant but is not always available, and anionic polyacrylate is used as a flocculant aid. Lime is used to adjust the pH. The lime that is furnished contains from 50 to 65% inert materials, contributing to the large sludge volumes produced by the WWTP. The flocculation basin was designed to be mixed using air diffusers. These tanks are full of sludge to near water level. Sludge is removed by hand and trucked to the gravity thickeners. The air diffusers are all under the sludge and are not effective.

**G. Dissolved Air Flotation (Unit Nos. 106 and 107)**

Influent flow is transmitted from the coagulation/flocculation basin to the flotation clarifiers (Unit No. 107). The size of each tank and type of sludge collection mechanism is the same as the equalization tanks. However, these units are center fed, peripheral discharge type clarifiers. Sludge is collected in a center sump and pumped to the gravity thickener. Units 107/2 and 107/3 are functioning but the



16

drive mechanism of unit 107/1 is not operable. Approximately 25 percent of the influent flow is recycled through enclosed tanks (Unit No. 106) that are pressurized using air and then returned to the flotation clarifier. There are four (4) circular enclosed pressure tanks. Only one tank is operable. Float is skimmed from the clarifier and transferred to the gravity thickener. This practice should be discontinued and skimmings should be dewatered and disposed to a landfill.

**H. pH Adjustment Tank (Unit No. 108)**

This tank is used to adjust the pH from >9 to about 7.5 using sulfuric acid.

### 2.3.2 Secondary Treatment

**A. General**

After pretreatment the plant and municipal flows are combined and mixed in Unit 130 prior to transfer to secondary treatment. The secondary system was designed as a two-stage activated sludge process and, in general, is not providing treatment. The second stage is being bypassed while aeration and return sludge systems of the first stage are not functional.

**B. First Stage Aeration Tanks (Unit No. 111)**

The aeration tanks are divided into three (3) distinct trains, each consisting of eight (8) separate cells with concrete inlet channels in the center of each unit. The flow runs sequentially between the eight (8) cells through underwater ports. Air is provided by slow speed aerators. The bio unit is functioning as a flow-through unit only at the present time. The aerators are inoperative and have never worked properly since they were installed. Each train has a volume of 12,800 $m^3$ with a total volume of 38,400 $m^3$ for all three trains. At a flow rate of 1600 $m^3/h$ the detention time would be 24 hours.

**C. First Stage Secondary Clarifier (Unit No. 111)**

There are three (3) center feed, peripheral discharge clarifiers which are 45m in diameter. The surface area of each tank is 1,590 $m^2$ (17,100 sf). The overflow rate at 1600 $m^3/h$ with one tank in service is 24 $m^3/d/m^2$ (596 gal/d/sf). Each clarifier is equipped with a rotating full bridge peripheral driven sludge collector mechanism.



17

Units 111/1 and 111/2 are out of service because of sludge collector mechanical problems. Unit 111/3 is operable but skimmings removal is not satisfactory.

**D. Second Aeration Tanks (Unit No. 113)**

This stage consists of two (2) separate trains, each train is identical to a first stage aeration tank. Aerators are not operable.

**E. Second Stage Secondary Clarifiers (Unit No. 114)**

There are three second stage clarifiers identical to the first stage units. All units are operable but require minor maintenance.

### 2.3.3 Tertiary Treatment

**A. Solids Contact Tanks (Unit No. 118)**

There are two solid contact tanks, neither of these units are operable due to mechanical problems. This process is being bypassed.

**B. Effluent Pump Station (Unit No. 119)**

Flow is pumped from the treatment plant site to the Black Sea Lagoon. The effluent pump station is equipped with four (4) 2,400 $m^3$/hr pumps. The Pump station is oversized similar to the intermediate pump stations.

**C. Black Sea Lagoon (Unit No. 131)**

The Black Sea Lagoon is located $\pm$15 km north of the plant near the Black Sea. This lagoon is 280m x 840m in area and has a liquid depth of 1.25 to 1.5m. Currently, there is a dredging contract in progress to deepen the lagoon to 2.5m. The lagoon inlet is below the water surface. The effluent is discharged through approximately 90 overflow ports equipped with manual slide gates. The overflow ports discharge into an open channel that conveys the effluent to the Black Sea 1 to 2 km away. There were no readily apparent signs of biological activity in the lagoon. However in the summer months some biological activity probably occurs.



13

### 2.3.4 Sludge Handling

**A. General**

All sludge is gravity thickened and dewatered using plate and frame filter presses. The sludge is hauled to a sludge holding area 2 to 3 km southwest of the wastewater treatment plant.

**B. Thickeners (Unit No. 125)**

There are six gravity thickeners but only Unit 125/1 is operable. All the other units are inoperable due to mechanical problems. Sludge is thickened to 10 to 16 percent solids.

**C. Plate and Frame Filter Presses (Unit No. 132)**

There are five (5) filter presses. Only two units are being used, reportedly producing sludge concentrations in the 60 to 80 percent solids range. The filter cake solids concentration is very high and is probably a result of the large quantities of poor quality lime used.

**D. Incinerators (Unit No. 133)**

There are six rotary kiln type incinerators. The incinerators are inoperable and have not worked since start up of the WWTP. Problems associated with these units are outlined in detail in the September 1991 Environmental Study.

### 2.3.5 Existing Facilities

No attempt has been made to record every deficiency observed. However, it is readily apparent that, in general, the mechanical and electrical systems as well as the structures are in poor condition and in need of repair. To properly assess the existing situation in the detail required to prepare a complete corrective action plan, two programs are recommended:

- Mechanical and Electrical System Inventory - An inventory of the mechanical and electrical systems should be performed to identify the number, type, and condition of each item. The equipment should be categorized to identify equipment that is not serviceable versus those items that are operable or can be repaired. Also, equipment that may not be serviceable but can serve as a source of spare parts should be identified. Equipment that is not serviceable or otherwise useful should be removed



19

and disposed of. Equipment that is required for operation should be repaired and put into service. All other items should be cleaned and protected for future use.

- Structural Survey - A number of structures are in poor condition and we understand that a number of tanks leak. A visual inspection of all structures should be performed, noting all conditions that will require repairs. In addition, all tankage should be hydrostatically tested and all pipelines pressure tested for leaks. Supplemental material testing may be required if faulty materials are found. Where necessary, repair methods should be developed.

## 2.4 CONCLUSION

The existing wastewater treatment plant was designed for a considerably higher flow (6,800 $m^3/h$) than it is currently treating (1,600 $m^3/h$). In addition, the treatment process includes some treatment steps that would normally not be anticipated for a situation like Petromidia. The net effect is that the WWTP has all the structures needed to meet treatment goals however significant repair, systems optimization, and modifications to existing systems are required. The existing WWTP is too large and complex; and should be simplified.

In general, most systems are either not functional or barely operable and the WWTP is not meeting treatment goals. Treatment is being provided by physical/chemical treatment systems only; the biological processes are not performing. An overall rehabilitation and improvement program is needed. This issue is compounded by the lack of available spare parts. The scope of items requiring repair and/or maintenance is overwhelming and needs to be reduced.

# 3.0 RECOMMENDATIONS

## 3.1 APPROACH

The existing WWTP is oversized, too complex, in poor physical condition and is not meeting the treatment goals. The WWTP is in need of major overhaul and upgrading. The actions necessary to provide a properly functioning facility will require considerable effort and expenditure of money, as well as sufficient implementation time. However, improvements are needed immediately. Therefore, a two-phase approach is recommended:

Phase I - immediate action program, and

Phase II - long term improvement program.

The immediate action program should be initiated as soon as possible and proceed in a step-by-step manner to restore operation and improve plant performance. It is important to understand that the immediate action program will not necessarily bring the WWTP into compliance with regulations or provide the most cost-effective systems. Rather, its goal is to implement modifications that would use existing resources to provide the best practical treatment in the shortest time. It would be the goal of the long-term program to provide the most cost-effective, environmentally acceptable solutions. It is beyond the scope of this report to attempt to recommend long-term solutions because the data necessary to establish appropriate treatment goals or properly define the existing conditions are not available. Therefore, the recommendations in this report will concentrate on two issues:

- Identify those items required to initiate a comprehensive planning program to upgrade the WWTP.
- Identify those areas that can be addressed now and result in immediate improvements in plant operation.

## 3.2 PROGRAM DEVELOPMENT

Fundamental to program development is obtaining the services of a firm qualified to provide the necessary technical expertise. The chosen firm should specialize in wastewater treatment and have extensive experience in industrial waste treatment, treatment plant rehabilitation, and plant operations and maintenance. Because the level of treatment to be attained should be based in water quality objectives, the consulting firm should also possess



21

expertise in water quality studies and water quality modeling. Once on board, this firm would be responsible for development of both the immediate action and long-term programs.

Development of the long-term program should proceed in parallel with implementation of an immediate action program. The first step in the long-term program would be to prepare a comprehensive plan that would include, among other things, an assessment of existing and future conditions, identification of all factors critical to the project design, identification and evaluation of options, selection of the recommended plan, and a preliminary design of the recommended facilities along with a management plan to complete the project. The plan would also address critical environmental issues and would establish water and air quality goals. Some of components of the comprehensive plan that are critical to both the intermediate and long-term programs are as follows:

- Consolidate available data on flow, waste characterization, and process performance. Develop a data gathering program to verify and supplement existing data.
- Evaluate all plant influent flow sources in terms of both average and peak flows (municipal, refinery and petrochemical waste, groundwater recovery system, and storm water discharge system).
- Based on estimated plant average and peak flow, perform a plantwide hydraulic analysis.
- Characterize all influent flows.
- Evaluate performance of all operating systems.
- Inventory all existing plant systems and equipment including spare parts. Categorize existing equipment by identifying unsalvageable equipment versus those items that are operable or can be repaired. In addition, equipment that is not serviceable but is a source of spare parts should be identified.
- Perform a physical condition survey of structures noting all deficiencies. Hydrostatically test all tanks and pressure test all piping for leaks.
- Implement a waste minimization program to reduce both influent flow quantities and strength.
- Develop a mass balance for critical parameters such as suspended solids and $BOD_5$.
- Full-scale pilot testing of potential treatment processes.

Implementation of the long term improvements would begin with the completion of the comprehensive planning phases.



22

It is also important to understand that the engineers assigned to the plant site would require technical backup. Those backup services would best be provided by the firm responsible for developing the long-term program. A purchasing agent would also be required to institute the WWTP improvement program.

## 3.3 DETAILED RECOMMENDATIONS - IMMEDIATE ACTION PROGRAM

The goal of the immediate action plan is to make interim modifications that will improve WWTP performance. Key to this goal is to simplify the treatment process and reduce the maintenance and operations burden on the WWTP staff.

It should be emphasized that the program recommended herein and is based on one site inspection and a limited amount of data. It is the goal of these recommendations to provide initial guidance for a rehabilitation program. The program should be flexible and revised as more information becomes available. The process and start-up engineers would play major roles in modifying and upgrading this program.

The major improvements recommended under the immediate action program are as follows:

- Improve performance of the grit and floatable removal systems.
- Eliminate chemical conditioning.
- Restore operation of the secondary treatment system.
- Downsize the WWTP treatment and hydraulic capacity to more closely match actual flows.
- Repair and replace critical equipment.
- Stabilize flow through the system.

Grit and floatables are a major cause of equipment and system failures. They should be removed from the wastewater as soon as possible. Elimination of chemical conditioning and start up of secondary treatment should significantly reduce sludge production, another major cause of equipment and system failure. After these process modifications have been completed, the need for chemical conditioning should be re-evaluated. The WWTP was designed for much higher

flows and as a result wastewater flows through the WWTP in slugs. The WWTP should be modified to process wastewater flows continuously.

Following is a detailed description of the proposed interim improvements. The proposed flow schematic is shown on Figure. 3.

### 3.3.1 Plant Improvements

**A. Site Housekeeping**

Generally, it is more cost-effective to prevent pollutants from entering the waste stream than removing them from the wastewater. The plant site should be cleaned and actions taken to prevent pollutants from entering the WWTP via storm water runoff. For example, the coking and sulfur yard storage areas need to be isolated so that rainfall does not come into contact with these products and the area should be enclosed with low walls to prevent these materials from getting into the waste stream. The desulfur gas unit and sulfur recovery area also have a similar problem. Other areas need to be examined and cleaned up if necessary. A general site cleanup program should be conducted regularly.

**B. Sour Water Stripper**

All efforts need to be made to reduce the amount of sulfur entering into the waste streams. An adequate supply of monoethanol amine (MEA) will help improve the efficiency of sulfur removal from the process gases. A switch from ammonia to caustic in corrosion control will help the steam stripping efficiency from sour water and in the Claus unit. While it is recognized that caustic is much more expensive than ammonia, total production costs including treatment must be considered.

### 3.3.2 Primary Treatment Modifications

A. Unit No. 101 (Grit Tanks)

This unit process has four tanks, designed such that two tanks serve each flow source (refinery and petrochemical plant). These tanks should not be allowed to fill-up with grit. For each flow source one tank should be in service while the second tank is out of service for cleaning. Grit should not be allowed to

# PETROMIDIA WASTEWATER TREATMENT PLANT

## PROPOSED FLOW SCHEMATIC

FIGURE 3

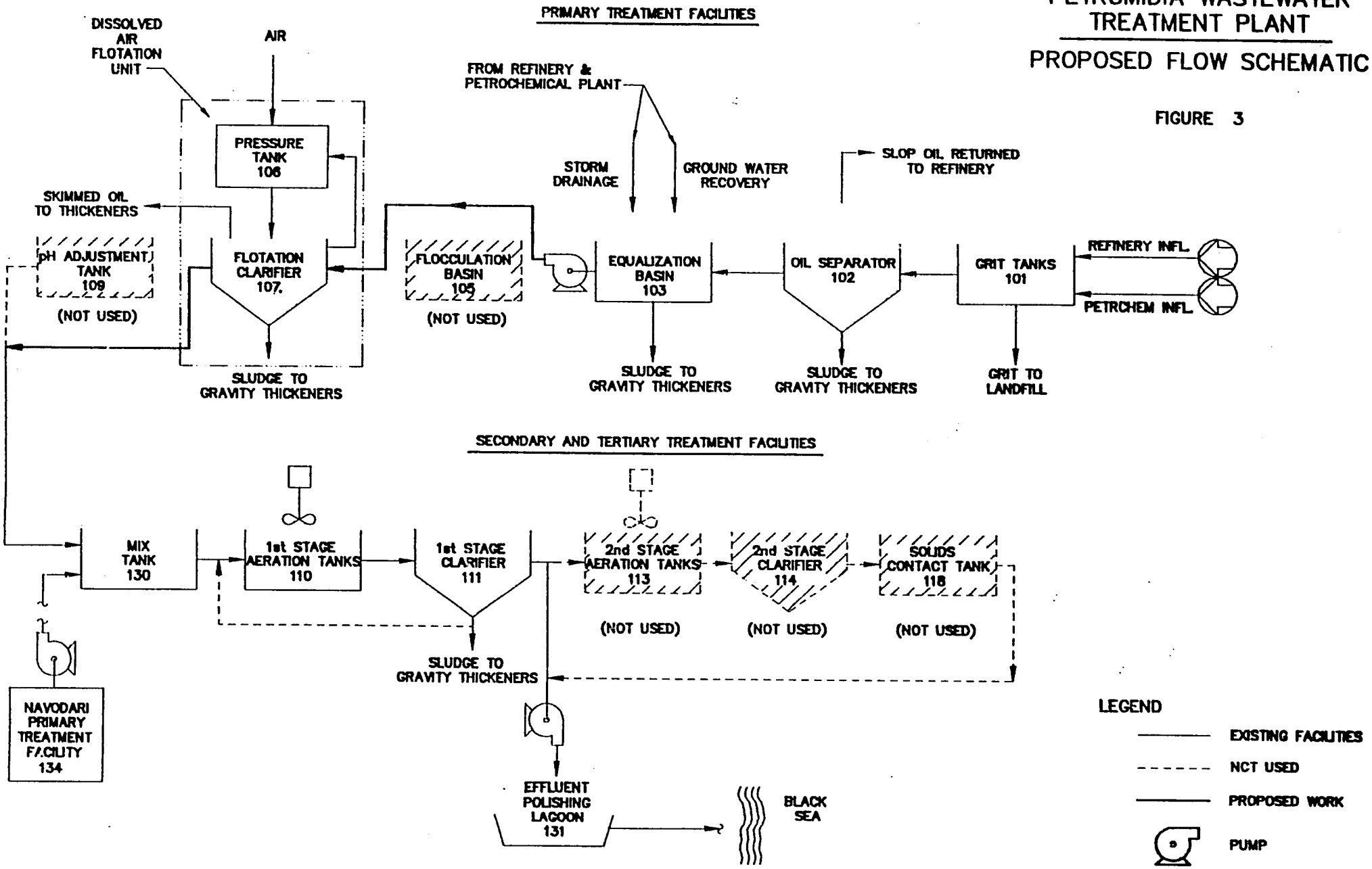

accumulate beyond 0.5 meter before cleaning. As an interim measure portable mechanical equipment such as a backhoe could be used to assist in grit removal. Consideration should be given to converting these tanks to aerated grit tanks with continuous grit removal.

B. Unit No. 102 (Oil-Water Separators)

This unit process has eight separators and only Unit No. 102/8 is operational. All separators should be made operable, since these units are an inexpensive front line of defense to protect the rest of the treatment plant from slugs of organics. Also material recovered can be reclaimed or used for fuel. New travelling bridges, skimmers and sludge rakes need to be installed. At least 5 units should be operable at all times. Two separators are required for refinery waste flows, one for petrochemical plant waste flows and one unit should always be available as stand-by for each flow source.

C. Unit No. 103 (Equalization Tank)

There are ten equalization tanks of which six are working. The purpose of these tanks is to dampen variations in flows and mass loading. The maximum number of tanks required is a function of the peak flow characteristics from the complex storm drainage and ground water recovery systems. If it is assumed that this was the basis for the original design, then all tanks should be functional. In general, not more than two tanks should be unavailable for service at any time. The other purpose of these tanks is to equalize mass loading. Concentration of pollutants from the refinery and petrochemical plants can vary considerably with time and peak loads must be damped to prevent upsets of the secondary system. For this purpose, it is recommended that the equalization basins be operated to provide approximately 24 hours detention based on average daily dry weather flow from the complex. For this purpose, three (3) tanks should always be available for service (one stand-by) to blend the waste flows to provide more uniform wastewater characteristics. The remaining tanks would be used to store peak flows. The three (3) tanks dedicated to load equalization should be modified. The sludge collectors should be removed and replace with mixers. Two tanks would provide approximately 21 hours detention time based on average dry weather flow. These tanks require a general cleaning and the tank dedicated for



26

peak flow storage should be equipped with new skimmers, scrapers, scum boxes, and overflow weir plates.

D. Intermediate Tanks Pump Station

The capacity of the pump station should be reduced so that normal flows will pass through the plant continuously and not in slugs as it now does. The size of the new pumps and need to retain the existing 2400 $m^3/h$ pumps needs to be evaluated. Based on the limited data available, it appears that three new 500 $m^3/h$ (one standby) would be required and at least one existing 2400 $m^3/h$ pump could be eliminated. Alternatively, as an interim measure, installation of smaller impellers in the existing pumps or the addition of a recirculation loop that would recycle a portion of the flow back to the equalization tanks could be considered.

E. Unit 105 (Coagulation/Flocculation Basins)

Sulfides from the complex are normally less than 100 ppm and, therefore, it may not be necessary to coagulate and flocculate the wastewater. As part of the interim program it is recommended to stop, at least temporarily, chemical addition. However, if it is determined the chemical addition must be resumed, than it is recommended that alum be used in lieu of ferrous sulfur, polyacrylate and lime. After chemical conditioning is terminated these tanks will be bypassed. The tanks and associated equipment should be cleaned and protected for long-term storage. It may be necessary to use some of these facilities at a later date.

F. Unit Nos. 106 and 107 (DAF Units)

This system should be made fully functional. All three clarifiers should be rehabilitated. The sludge collection and skimming system needs to be repaired and new weir plates, inlet and outlet piping and scum boxes are required. The current recirculation rate is 25 percent and should be increased. All pressure tanks should be made operational.

G. Unit No. 108 (pH Adjustment Tanks)

Based on the pH of the influent wastewater, it appears that after chemical conditioning is terminated that pH control will not be required and these tanks

could be by-passed. The tanks should be cleaned and protected for long-term storage for possible future use.

### 3.3.3 Secondary Treatment Modifications

A. General

The secondary treatment process consists of first-and-second stage activated sludge process. The second-stage process is currently out of service and should remain so for the near term. However, this equipment should be protected to prevent further deterioration. The first-stage process should be, at least, temporarily converted to an extended aeration activated sludge process which would require the use of all aeration tanks and one clarifier. The aeration system and return sludge system should be replaced.

B. Unit 110 (Aeration Tanks)

This unit at the present time is just a flow-through channel for the combined municipal and industrial waste. Existing low-speed aerators are not operable. For the interim program it is recommended that the activated sludge system be operated in the extended aeration mode. There is sufficient tank capacity to operate in this mode and this method of operation will result in a minimum of sludge production. A new aeration system is required and the simplest approach would be to install new high-speed surface aerators in all tank cells. The aerators should be designed to provide the necessary oxygen transfer and mixing to keep the mixed liquor in suspension.

The existing aeration tanks are designed as plug flow reactors. However, for an industrial waste like that from the refinery-petrochemical complex a mixed flow reactor would be better. A mix flow reactor would be more resistant to upsets from slugs of high strength and potential toxic waste flows. Therefore, consideration should be given to demolishing some of the interior walls, step feeding the waste water into more than one cell and possibly designing a recycle system to improve mixing of the mixed liquor within the reactor.



28

C. Unit No. 111 (Sec. Clarifier)

Only one clarifier is operational and normally only one will be required. A second clarifier should be made operational as standby. The peripheral drive units need to be replaced. In addition, the skimming system, scum boxes, and overflow weirs all need to be rehabilitated. The sludge withdrawal system needs to be checked and the return and waste sludge systems should be made operational.

### 3.3.4 Tertiary Treatment Modifications

A. General

By-passing of the solids contact tank should continue. The effluent pump station should be downsized similar to that for the intermediate pump station or alternatively the existing second stage aeration tanks could be used as storage tanks and pump to the Black Sea Lagoon intermittently as is the current practice.

B. Unit No. 131 (Black Sea Lagoon)

The current program to deepen the lagoon should be continued and the performance of the lagoon should be evaluated. The addition of floating aerators at the influent end of the lagoon may be required if it is found that the dissolved oxygen levels are too low.

### 3.3.5 Sludge Handling Modifications

A. General

For the immediate action program we recommend that the plant continue to thicken, dewater, and lagoon the sludge. When chemical conditioning is discontinued and the secondary sludge system started, the quantity of sludge produced should drop significantly. However, the solids concentration of the sludge cake should decrease and sludge drying beds may be required as an interim measure. Also chemical addition at the filter presses may be required to dewater the sludge.

B. Unit No. 125 (Gravity Thickener)

Only Unit 125/1 is operable. We recommend that Unit 125/2 be repaired for standby use.

### 3.3.6 Facilities Rehabilitation

Mechanical and electrical systems and structures should be surveyed as outlined in Section 2.3.5. Based on the results of these surveys, a rehabilitation program should be undertaken on designated equipment and structures. Concurrently, a general site cleanup program should also be undertaken and repeated on a regular basis. Equipment that is not serviceable or useful for spare parts should be removed and disposed of. All other equipment should be cleaned and protected for future use.

### 3.3.7 Costs

The Environmental Study prepared by Société d' Etudes Techniques was reviewed. In general, this study recommends the restoration of all of the unit processes originally designed, adjusted for actual flow conditions. Based on our observations, simply restoring the existing treatment systems may not be the best approach. There is however, insufficient data available to make this determination. Therefore, our recommendation is to initiate an investigation to determine the best approach for upgrading the plant while simultaneously initiating an immediate action program to make interim improvements. The interim recommendations contained in this report include some but not all the recommendations made in The Environmental Study. No attempt was made to prepare an independent cost estimate. However, to develop an estimate of the costs for the interim improvements recommended herein, the costs contained in The Environmental Study were reviewed and adjusted where appropriate, as follows:

U.S. Dollars ($x1,000,000)

| | Environmental Study (Recommended in French Study) | Interim Improvements (Recommended in this Report) |
|---|---|---|
| Equipment | $ 3.4 | $ 1.6 |
| Labor | 1.4 | 0.7 |
| Supervisor/Eng. | 1.1 | 0.6 |
| TOTAL | $ 5.9 | $ 2.9 |

## APPENDICES


A Itinerary . . . . . .

B Names and Addresses of Persons Contacted . . . . . .

C List of Documents Received . . . . . .

D Complex Perimeter Slurry Trench . . . . . .

E Refinery Plot Plan . . . . . .

F Refinery Block Diagram . . . . . .

G Petrochemical Plant Block Diagram . . . . . .

H 1991 Summary of functional Unit Processes . . . . . .

I C. Malchow Resume . . . . . .

## APPENDIX A - ITINERARY

**Travel Briefing**

| | |
|---|---|
| April 25 - 27 | Enroute New Orleans to Constan'a, Romania via Bucharest. Briefing by Mr. Liviu Ionescu, WEC Representative. |
| April 27 | Plan for investigation of waste treatment plant was prepared. |
| April 28 | Meeting at the plant with Mr. Vasile Porcisteanu, Petromidia Deputy General Manager; Ms. Monica Vargancsik,- Manager of Ecological Services; Mr. Ion Vertan, Utility Systems Manager; Ms. Mariana Dragoi, Manager Cooling Tower Water/Waste Treatment Plant; and Mr. Carter Brown, TMR Representative<br><br>Discussed plant background problems, priorities and plan of action. In the afternoon toured the waste treatment plant with Mr. Aurelian Nicolae, Manager of Wastewater Plant. |
| April 29 - 30 | Spent at wastewater plant, reviewing operational records, lab data, interviews with Mr. Aurelian Nicolae. |
| May 1 | Reviewed all data and information that has been secured. Outlined additional information needed to be obtained and developed preliminary thoughts on options available to solve the problems. |
| May 4 - 5 | The additional information needed from the plant and its operations were obtained. |
| May 6 | Worked on developing available solution options to the problems. Took Mr. Royce Stroud - local TMR Manager on a tour of the waste treatment plant with explanations of the process and problems. |
| May 7 | Met again with same people as at April 28 meeting. Presented preliminary conclusions and proposed options that were available. |
| May 8 - 9 | Enroute Constanta, Romania to New Orleans via Bucharest. |

## APPENDIX B - NAMES AND ADDRESSES OF PERSONS CONTACTED

| NAME/TITLE | COMPANY/ADDRESS | PHONE |
|---|---|---|
| Dipl. Eng. Alexandru Nicoicioiu,<br>General Manager | Petromidia, SA, Romania<br>DN 22B - KM 23<br>Constanta - cod 8736 | 916 6 01 35 |
| Dipl. Eng. George Stanescu,<br>Clefins Plants Manager | Petromidia, SA, Romania<br>DN 22B - KM 23<br>Constanta - cod 8736 | 916 6 46 00 |
| Dipl. Eng. Vasile Porcisteanu<br>Deputy General Manager | Petromidia, SA, Romania<br>DN 22B - KM 23<br>8700 Constanta | (40) 1 66 01 35 |
| Eng. Teodor Mihail Marcean,<br>Head of Management Department | Petromidia, SA, Romania<br>DN 22B - KM 23<br>8700 Constanta - cod 8736 | 916 6 46 00 |
| Dipl. Eng. Ion Vertan,<br>Utilities Systems Manager | Petromidia, SA, Romania<br>DN 22B - KM 23<br>8700 Constanta - cod 8736 | 916 6 46 00 |
| Monica Varganicsik,<br>Engineer, Environmental Dept. | Petromidia, SA, Romania<br>DN 22B - KM 23<br>8700 Constanta - cod 8736 | 916 5 00 54 |
| Dipl. Eng. Liviu Ionescu,<br>Head of Marketing Dept. | Cast Research Instruments<br>46 Fabrich Street<br>77341 Sucharest, Romania | 81 66 50 |
| | | |
| | | |

## APPENDIX C - LIST OF DOCUMENTS RECEIVED

### Midia Refinery

Environmental Study of Midia Refinery, August and September 1991 by Societe d'etudes techniques, Ingenieur Conseul, France.

### Operational Data

Operational data on the following:

1. Wastewater Treatment Plant.
2. Groundwater Recovery Program.
3. Surface drainage, pumping stations.
4. Partial flow information.

# APPENDIX D

## PLANT PERIMETER SLURRY TRENCH

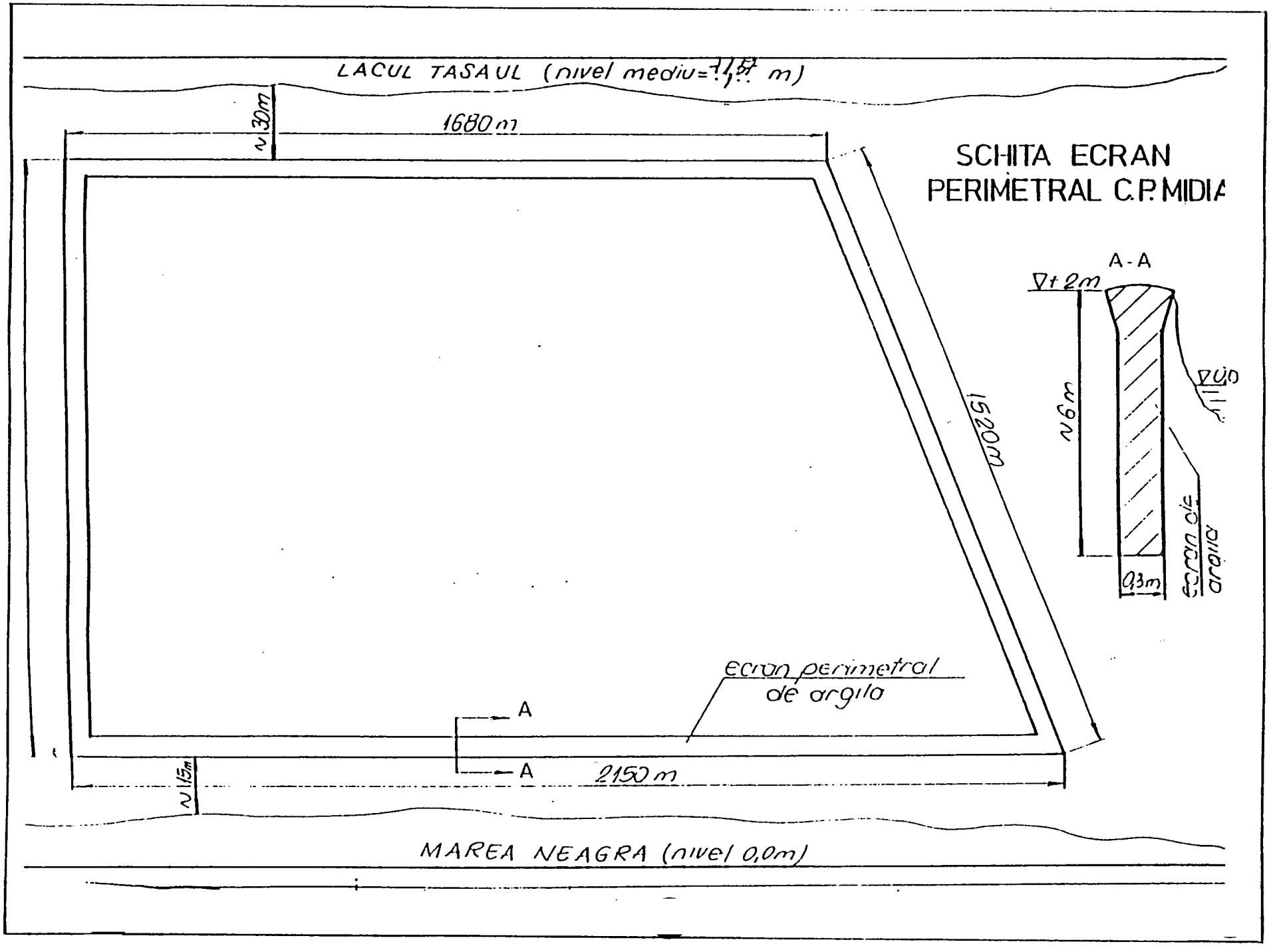

**APPENDIX E**

REFINERY PLOT PLAN

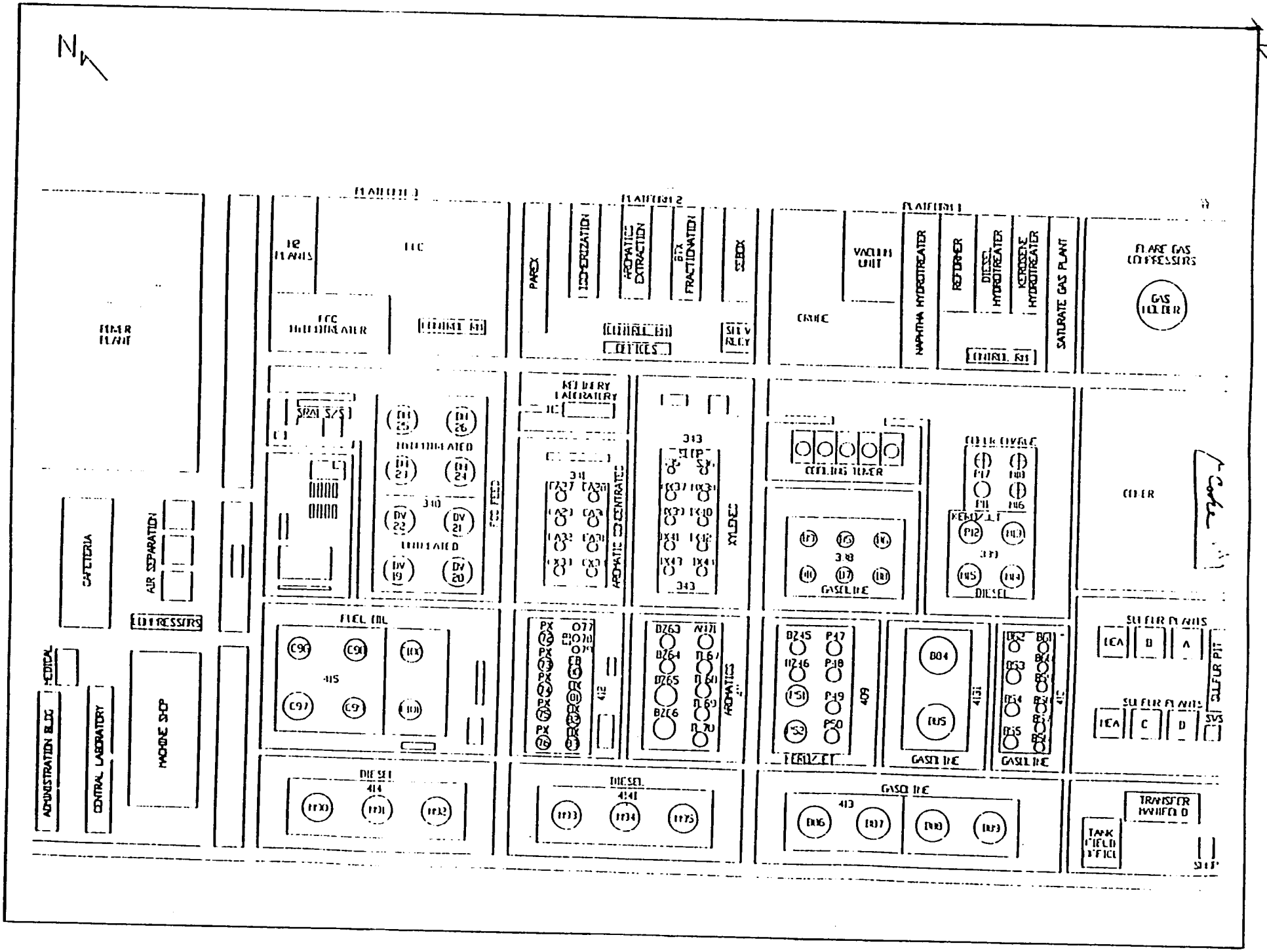

# APPENDIX F

## REFINERY BLOCK DIAGRAM

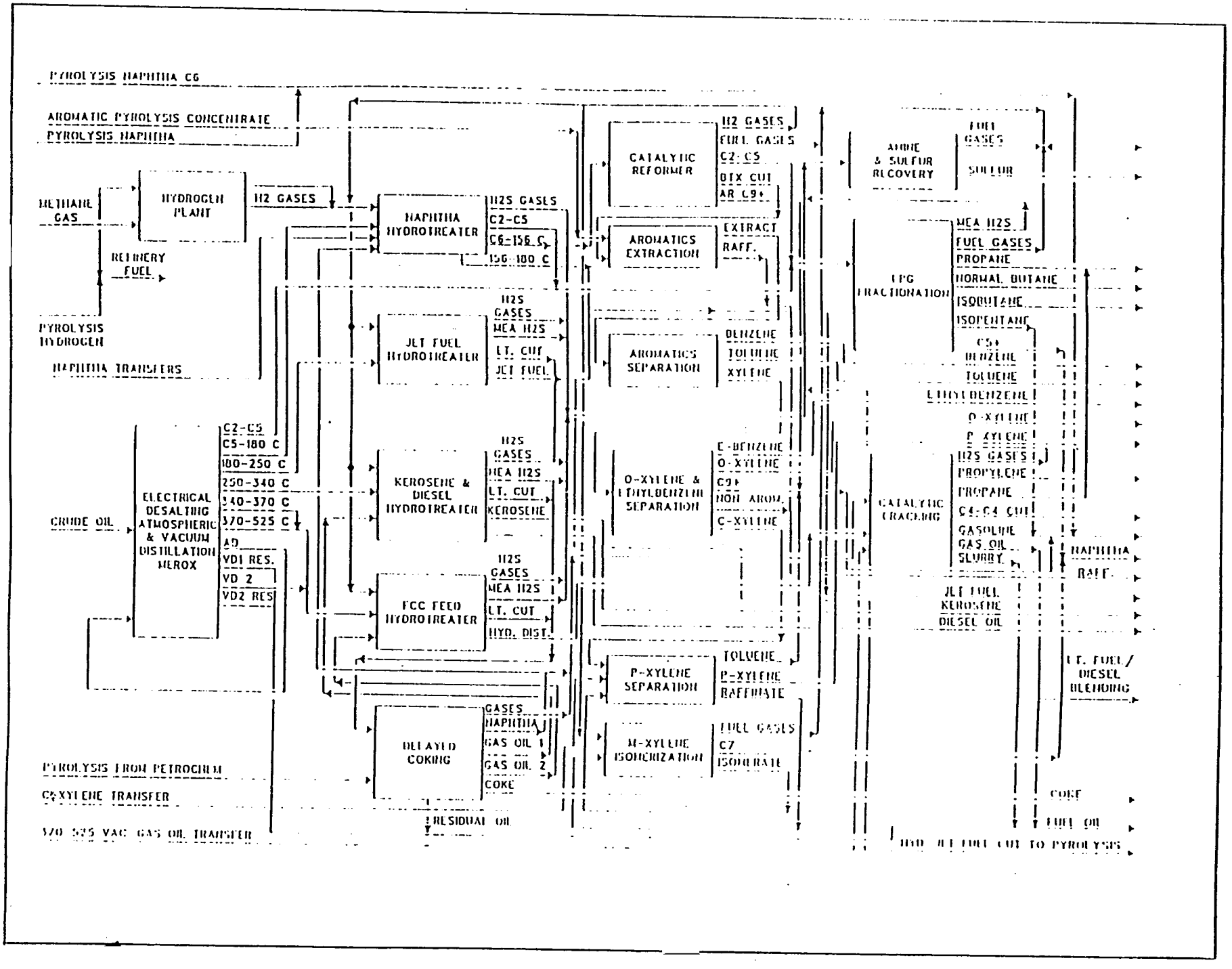

**APPENDIX G**

PETROCHEMICAL PLANT BLOCK DIAGRAM

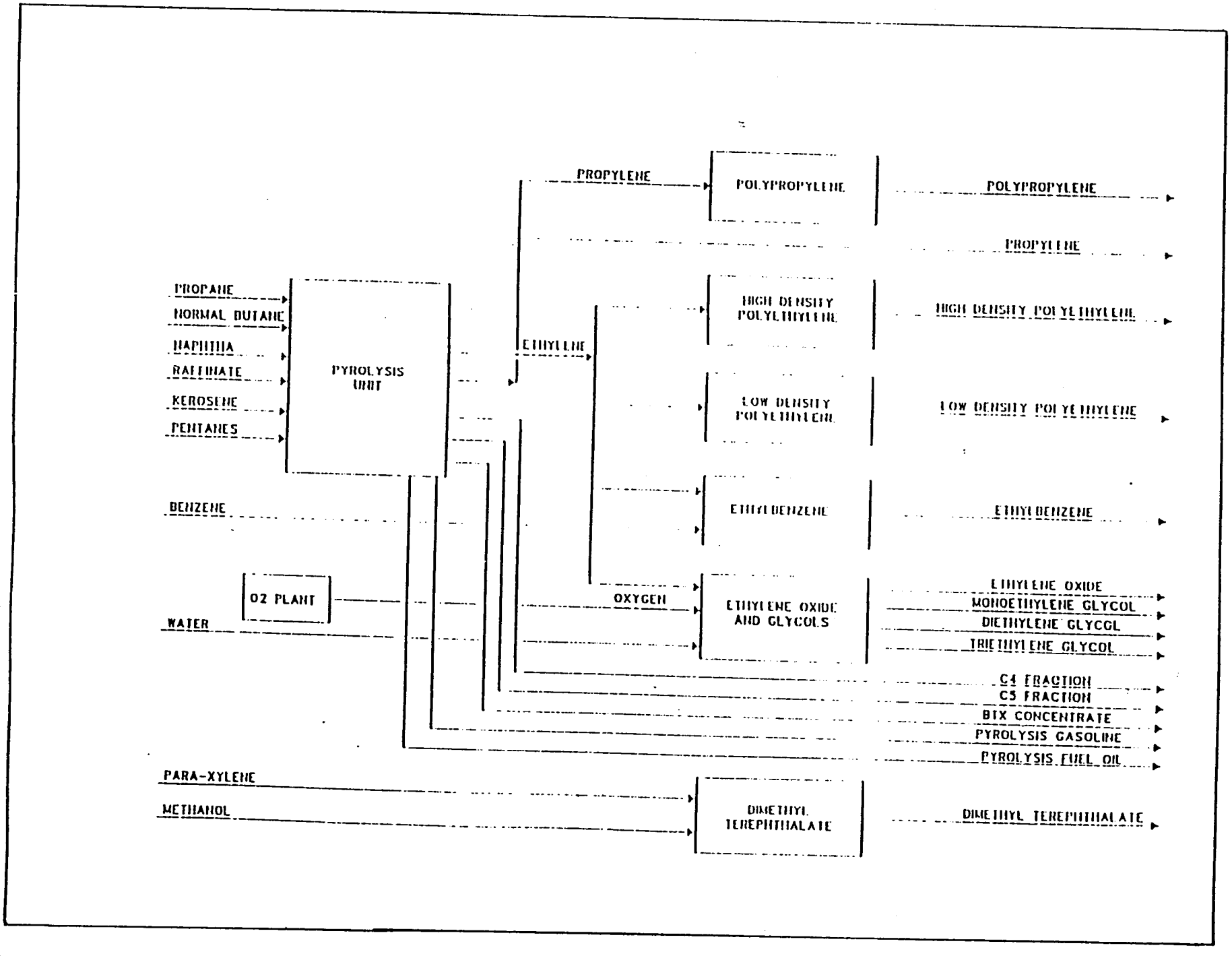

# APPENDIX II - SUMMARY OF FUNCTIONAL UNIT PROCESSES

| FUNCTION CODE | JANUARY | FEBRUARY | MARCH | APRIL | MAY | JUNE | JULY | AUGUST | SEPTEMBER | OCTOBER | NOVEMBER | DECEMBER |
|---|---|---|---|---|---|---|---|---|---|---|---|---|
| DAV | X | X | X | X | X | X | X | X | PLANT NOT IN OPERATION | | | |
| HB | X | X | X | X | X | X | X | X | | | | |
| RC | X | X | X | X | X | X | X | X | | | | |
| HPR | X | X | X | X | X | X | X | X | | | | |
| HPM | X | X | X | X | X | X | X | X | | | | |
| FG | X | X | X | X | X | X | X | X | | | | |
| CX | | | X | X | | X | X | X | | | | |
| DGRS | | | | X | X | X | X | X | | | | |
| EA | X | X | X | X | | X | | X | | | | |
| BTX | X | | | | | | | | | | | |
| $I_2$-MX | X | | | | | | | | | | | |
| PAREX | | X | X | | | | | | | | | |
| CC | | X | X | X | | X | X | X | | | | |
| HDV | | | | | | | | | | | | |
| HGP | X | X | X | X | X | X | X | X | | | | |
| HDP | X | X | X | | X | | | X | | | | |
| LDP | X | | | | | | | | | | | |
| PP | | | | | | | | | | | | |
| ETB | | | | | | | | | | | | |
| EP | X | | | | | | | X | | | | |
| OH | X | | | | | | | X | | | | |

Operation Functions - Nomenclature

DAV = Atmospheric distallation and vacuum
HB = Hydrotesting
RC = Catalytic Reforming
HPR = Jet fuel hydro treating
HPM = Diesel hydro testing
FG = Saturating gas plant
CX = Delayed coker
DGRS = Desulfur unit - gases and sulphur recovery
EA = Aromatic extraction
BTX = Benzene, toulene, xylene

$I_2$-MX = Isomerization
PAREX = Para propylene extraction
CC = FCC
HDV = Hydro testing - vacuum gas, oil
HGP = Hydrogeneration plant
HDP = High density polyethylene
LDP = Low density polypropylene
PP = Polypropylene
ETB = Ethylbenzene
EP = Ethylene plant

OH = Ethylene oxide

## APPENDIX I

**H. CLARK MALCHOW**
**Associate**

### EDUCATION

BS (Civil Engineering) 1949; Tulane University
Graduate studies in doctoral program – Environmental Engineering, 1972-1974, Tulane University

### REGISTRATION

Professional Engineer

### SOCIETIES

Water Pollution Control Federation
Air and Waste Management Association

### SUMMARY OF EXPERIENCE

Mr. Malchow has 43 years of experience. The last 20 of which have been dedicated to the environmental area. His fields of specialization include both project administration and the technical work involved. The last 6 years have primarily been devoted to RCRA hazardous waste work for industry (chemical plants and refineries).

### DETAILED EXPERIENCE

1991 to Date — Malcolm Pirnie, Inc.

- Provides RCRA regulatory input on projects.
- Provides technical approach and assistance on projects and proposals.
- Developed work plans for pipeline facilities.

1986-1991 — Groundwater Technology Inc.

As Regional Engineer, Southern Region:

- Regional source for regulations (federal and state) concerning RCRA, LDR, HSWA, CWA, CERCLA, Solid Waste and Drinking Water.
- Responsible for hazardous waste certification work under 40 CFR 264 at refineries and chemical plants.
- Provided numerous SPCC plans around the country.
- Designed ground water collection systems and soil vent systems at chemical plants/refineries.
- Acted as project manager on industrial wastewater treatment plants for refineries and chemical plants.

(continued)

**DETAILED EXPERIENCE (Continued)**

1986-1991 Groundwater Technology, Inc. (continued)

- Project manager for a RFI on a large, specialty chemical plant involving RFI work plan, corrective measure studies (CMS) and corrective measure implementation (CMI).
- Developed and managed RCRA ground water/landfarm monitoring systems in the detection and compliance modes.
- Project manager for clean and post closures under RCRA.
- Designed pretreatment systems involving scaling/fouling by inorganics.
- Designed large well field collection system involving scaling pretreatment, air stripping and carbon absorption at a petroleum refinery.
- Designed large iron removal treatment process for a petroleum refinery.
- Designed numerous engineering projects at hazardous waste facilities involving both organic and inorganic scenarios, including remediation.
- Project manager on a 4-cell aboveground bioremediation project for a chemical company.
- Designed an aboveground bioremediation project for a petroleum refinery.
- Provided technical assistance in ground water assessments on industrial sites where RCRA was involved.
- Project manager for an RFI for a major chlorine, caustic soda and chlorinated hydrocarbon facility. Mercury and lead were also involved. Work consisted of RFI work plans, investigation, corrective measure studies (CMS) and corrective measure implementation (CMI). The project involved fate, transport and movement of organics through the subsurface.
- Project manager for a landfarm project at a petroleum refinery.
- Project manager for a RFI for a petroleum refinery involving RFI work plans, corrective measure studies (CMS) and corrective measure implementation (CMI) and wastewater treatment project.
- Performed design engineering on a hexchrome waste treatment facility for a CCA wood treating plant.
- Project manager and design on a commercial hazardous waste facility involving 3008h consent orders for corrective action.
- Designed ground water collection and remedial facilities for a commercial hazardous waste facility.

(continued)

**DETAILED EXPERIENCE (continued)**

1986-1991 Groundwater Technology, Inc. (continued)

- Extensive RCRA general experience with industrial clients in formulating strategy.
- Experience in soil chemistry concerning hazardous waste scenarios.
- Project manager on a multiple site closure investigation for a pipeline company. Developed sampling and analysis plan, recommendations.

1981-1986 Delta Sperry Group

As Principal Partner:

- Responsible for process development, design engineering and construction segments of business.
- Assisted in marketing and sales segment with clients.
- Group engaged in the design-build industrial waste market. Experience included work with bulk terminals, biological (aerobic and anaerobic), poultry processing, heavy metals, sludge dewatering, detergents, physical-chemical, textile dyes, processes, chemical plants, refineries, ozonation, food industry, membrane tech (UF and RO), ceramics, refineries, carbon absorption, gas processing, air stripping, storm water runoff and filtration.

1956-1981 Malchow Engineers

As Principal:

- Responsible for general environmental projects, municipal and industrial water/waste treatment. Also performed work with water wells, distribution, permits, and regulatory work for clients.
- General civil consulting firm engaged in geotechnical work, site planning, water distribution, roads/bridges, water treatment, industrial piping, sewer collection, structural, electrical, sewage treatment, tanks, and fuel/chemical handling facilities.

1953-1956 Irby Steel Company

As Vice President, Engineering and Construction: Engaged in the design and construction of an array of types of steel tanks consisting of elevated water tanks, water storage tanks, pressure vessels and industrial chemical field erected tanks (used in the paper, refinery, and chemical industries).

1949-1953 Stupp Bridge & Iron

As Design Engineer: Performed structural design of paper mills, steel mills, conveyor, cranes, bridges, chemical plants.

(continued)

DETAILED EXPERIENCE **(Continued)**

1974-1987 ELI

As Chairman of the Board: Provided management assistance and planning for a laboratory engaged in environmental analytical work, monitor well drilling and installation, soil and concrete testing, geotechnical drilling, and NDT field work.