PD-ABE-211

Financial Audits

Audit of
SAVE THE CHILDREN FEDERATION, INC.
Cooperative Agreement No. NEB-0183-A-00-4073-00
Cooperative Agreement No. ANE-0159-A-00-6060-00

Report No. 0-000-92-09-N
June 22, 1992

"CONTRACTOR INFORMATION CONTAINED IN THIS REPORT MAY BE PRIVILEGED. THE RESTRICTIONS OF 18 USC 1905 SHOULD BE CONSIDERED BEFORE ANY INFORMATION IS RELEASED TO THE PUBLIC."

INSPECTOR GENERAL

U.S. AGENCY FOR INTERNATIONAL DEVELOPMENT

Agency for International Development
Washington, D.C. 20523

Assistant Inspector General
for Audit

June 22, 1992

MEMORANDUM FOR AA/NE, Reginald J. Brown
FA/OP, Terrence J. McMahon

FROM: AIG/A, John P. Competello

SUBJECT: Audit of Save the Children Federation, Inc. Cooperative Agreements Under the Agency's West Bank/Gaza Program

The accounting firm of Price Waterhouse performed a financial-related audit of two cooperative agreements with Save the Children Federation, Inc. under A.I.D.'s West Bank/Gaza Program. Two copies of the report are enclosed for your information.

Since 1977, Save the Children, a private voluntary organization (PVO), has received about $21 million from A.I.D. for strengthening urban infrastructure, agriculture, education and health services in the West Bank/Gaza territories. Activities included projects in irrigation, water sanitation, road construction, and repair of sewage facilities. The PVO has also assisted schools, day-care and community centers, and participated in emergency relief efforts in times of crises.

Price Waterhouse audited Save the Children disbursements totalling $4.4 million under cooperative agreement numbers ANE-0159-A-00-6060-00 and NEB-0183-A-00-4073-00. The audit covered the periods of October 1, 1987 to September 30, 1990 for the first agreement and October 1, 1987 to December 30, 1989 for the second.

The audit, part of a larger audit of the A.I.D. West Bank/Gaza Program, was requested by the Agency's former Bureau for Asia, Near East, and Europe. This is the fifth of six financial-related audit reports to be issued on PVOs operating in the West Bank/Gaza territories. The Office of Inspector General/Program and System Audits published another audit report (No. 9-000-92-006, dated March 18, 1992) showing the audit results on the Program's performance.

The audit objectives were to determine whether: the Schedules of Financial Assistance were presented fairly in accordance with generally accepted accounting principles; the internal control structure provided reasonable assurance of Save the Children's compliance with federal regulations; and the PVO had complied with

applicable laws, regulations, and provisions of the cooperative agreements.

Price Waterhouse determined that the Schedules of Financial Assistance were presented fairly in all material respects. However, the auditors identified $161,047 in questioned costs, of which $48,425 were unsupported.

Save the Children claimed value-added-taxes (VAT) totalling $112,622 as reimbursable costs under the cooperative agreements. The PVO was unable to determine whether refund requests had been filed, refunds received or if the Government of Israel was holding up the refunds. It was therefore not clear what happened to funds that may have been reimbursed to the PVO. These funds should have been used for project purposes only or reimbursed to A.I.D. **Apparently, Save the Children did not have standard procedures for the preparation and monitoring of tax refund requests.**

According to OMB Circular A-122, taxes for which exemptions are available are not allowable costs for reimbursement to a PVO under cooperative agreements. In response to the audit, the PVO stated that it has initiated some actions to obtain refunds and has also implemented standard procedures to ensure that future VAT payments are properly claimed and monitored.

> **Recommendation No. 1: We recommend that the Agency's Office of Procurement (FA/OP) resolve the $161,047 in questioned costs ($48,425 unsupported and $112,622 ineligible) identified in the audit report (page III-1).**

> **Recommendation No. 2: We recommend that the Agency's Office of Procurement (FA/OP) obtain an accounting from Save the Children for value-added-tax refunds that have been and will be reimbursed by the Government of Israel to ensure that these funds are applied for project purposes only or are reimbursed to A.I.D.**

The auditors identified three reportable internal control weaknesses and one instance of noncompliance (pages IV-3 to 8 and pages V-2, 3). One of the internal control weaknesses involved the charging of 100 percent of Save the Children's indirect field office expenses to the A.I.D.-financed cooperative agreements, even though non-A.I.D. activities also received the benefit of these expenses. The auditors indicated that there was an estimated $22,000 overcharge for ineligible costs under the cooperative agreements.

<u>Recommendation No. 3:</u> We recommend that the Agency's Office of Procurement (FA/OP) resolve $22,000 in questioned costs resulting from misallocated overhead charges (audit report, page IV-5).

The three recommendations will be included in the Inspector General's audit recommendation follow up system. Until we are advised of FA/OP's determination regarding the questioned costs, the recommendation will be considered unresolved. The recommendation can be resolved when we receive the contracting officer's determination as to the amounts sustained or not sustained. It can be closed when the amounts determined to be owed to A.I.D. are paid by Save the Children.

Save the Children has agreed to take corrective actions for the internal control and compliance weaknesses. We are currently, therefore, not making any recommendations about these matters. However, we will request that the PVO's auditor follows up on these matters during the next OMB Circular A-133 audit. Save the Children's management response is included in its entirety as Appendix I to this report.

We appreciate the courtesies and cooperation the Bureau, the A.I.D. Representative in Jerusalem and the U.S. Embassy in Tel Aviv extended the auditors and our staff during the course of this audit. Within 30 days, please provide this office with the status of actions planned or taken to resolve and close the recommendations.

Office of Government Services
1801 K Street, N.W.
Washington, DC 20006

Telephone 202 296 0800

Price Waterhouse

Audit of Save the Children Federation, Incorporated

A.I.D. Cooperative Agreement
No. NEB-0183-A-OO-4073-00
October 1, 1987 to September 30, 1990

A.I.D. Cooperative Agreement
No. ANE-0159-A-OO-6060-00
October 1, 1987 to December 30, 1989

Audit of
Save the Children Federation, Incorporated

A.I.D. Cooperative Agreement No. NEB-0183-A-OO-4073-00
October 1, 1987 to September 30, 1990

A.I.D. Cooperative Agreement No. ANE-0159-A-OO-6060-00
October 1, 1987 to December 30, 1989

This report is a financial - related audit of the cooperative agreement activity reported under the Agency for International Development's West Bank/Gaza program.

Audit of
Save the Children Federation, Incorporated

Table of Contents

		Page
Executive Summary		i
I.	**Introduction**	I-1
A.	A.I.D.'s Activities in the West Bank and Gaza	I-1
B.	The West Bank/Gaza Environment	I-4
C.	Save the Children Federation	I-4
D.	Objectives	I-7
E.	Scope and Methodology	I-7
F.	Organization of the Report	I-9
II.	**Report of Independent Accountants**	II-1
III.	**Schedules of Financial Assistance**	III-1
IV.	**Report on Internal Controls**	IV-1
V.	**Report on Compliance with Laws and Regulations**	V-1

EXECUTIVE SUMMARY

We audited Save the Children Federation, Incorporated (SC) cooperative agreement activity (NEB-0183-A-OO-4073-00 and ANE-0159-A-OO-6060-00) that is a part of the West Bank/Gaza (WB/G) program of the Agency for International Development's Bureau for Europe and Near East (ENE). The purpose of the first cooperative agreement is to assist SC and encourage community groups in the WB/G in rural development projects that will improve the social and economic conditions of the local communities. The specific goals of the cooperative agreements were to: help communities assess their needs and resources in order to design projects that will maximize these resources; support activities in the areas of basic needs, rural economic development and institutional development which include such projects in agriculture, marketing, water resource development, health and sanitation, and child/youth development.

The second cooperative agreement, a revolving loan fund, was designed to provide farmers and small-scale entrepreneurs in the WB/G with a source of development capital. The goals of this cooperative agreement were to: promote the development of small-scale rural enterprises; increase income generating agricultural activities; expand the capacity of the local economy to provide jobs; encourage farmers and small businessmen to invest more of their own capital in productive activities; stimulate experiments in crop diversification; and to broaden the agricultural economic base of the WB/G.

The first cooperative agreement (NEB-0183-A-OO-4073-00) is operational from August 31, 1984 through August 26, 1992. Our audit of this cooperative agreement covered the period of October 1, 1987 through September 30, 1990. The second cooperative agreement (ANE-0159-OO-6060-00) was operational from August 4, 1986 through December 30, 1989; our audit covered October 1, 1987 through December 30, 1989.

The field work was conducted in July through September 1991 in accordance with generally accepted auditing standards and *Government Auditing Standards* issued by the Comptroller General of the United States and included such tests of the accounting records as we considered appropriate. As a part of our examination, we obtained and understanding of the internal control structure and performed an assessment of control risk as part of the financial-related audit of the cooperative agreement activity. Further, we reviewed SC's compliance with applicable laws and regulations as contained in the cooperative agreements that have a material effect on the schedules of financial assistance.

The objective of the engagement was to perform a financial-related audit of SC's WB/G program cooperative agreement activity. Specific engagement objectives were to determine whether:

- the schedules of financial assistance are presented fairly in accordance with generally accepted accounting principles
- SC's internal control structure provides reasonable assurance of compliance with federal regulations
- SC has complied with the applicable laws and regulations that have been included in the standard and special provisions of the cooperatives

The description of the scope and methodology for the engagement can be found on page I-7 through I-9 of the report.

As a result of the audit, we have identified and reported questioned costs, needed improvements to SC's internal control structure and immaterial instances of noncompliance with the cooperative agreements.

Questioned Costs

As identified and described in detail in Note 5 of the schedules of financial assistance, there were $112,622 of ineligible costs and $48,425 of unsupported costs. SC will be working with the Contracting Officer in resolving these issues.

Internal Control Structure

We identified certain matters involving SC's internal control structure and its operation that we consider to be reportable conditions under the standards established by the American Institute of Certified Public Accountants. These conditions are as follows:

- SC has reported value-added taxes paid as a cost under the cooperative agreement
- A.I.D. cooperative agreements absorb 100 percent of SC's indirect field office expenses
- SC's field office financial management system needs improvement

Compliance Issues

We performed tests to ensure that SC has complied with the cooperative agreement and applicable laws and regulations. Our tests of compliance disclosed the following instances of noncompliance:

- SC does not maintain complete A.I.D.-financed property listings

We discussed the findings and recommendations in this report with SC management throughout the engagement both in Westport, Connecticut and in Jerusalem. At the conclusion of the WB/G field work, we held a preliminary

closeout on August 21, 1991 with the field office director Randall Harshbarger and field office administrator Mira Rizek in Jerusalem. Additionally, at the completion of the engagement on November 21, 1991, we held an exit conference with members of SC's management in Westport, Connecticut. Further, we discussed the report verbally with members of ENE Bureau, A.I.D.'s Office of the Inspector General, and members of the State Department's Israel Desk. Their comments on the draft report have been considered in finalizing the report while SC's comments have been provided in Appendix A.

I. Introduction

The mission of the Agency for International Development (A.I.D.) is to administer social and economic assistance programs that combine an American tradition of international concern and generosity with the active promotion of America's national interests. A.I.D. assists developing countries to realize their full national potential through the development of open and democratic societies and the dynamism of free markets and individual initiative. A.I.D. assists nations throughout the world to improve the quality of human life and to expand the range of individual opportunities by reducing poverty, ignorance and malnutrition.

A.I.D. meets these objectives through a worldwide network of country missions and offices which develop and implement programs guided by six principles:

- support for free markets and broad-based economic growth
- concern for individuals and the development of their economic and social well-being
- support for democracy
- responsible environmental policies and prudent management of natural resources
- support for lasting solutions to transnational problems
- humanitarian assistance to those who suffer from natural or man-made disasters

A.I.D.'s mission as a foreign affairs agency of the U.S. Government is to translate into action the conviction of our nation that continued American economic and moral leadership is vital to a peaceful and prosperous world.[1]

A. A.I.D.'s Activities in the West Bank and Gaza

The West Bank and Gaza (WB/G) program was initiated by Congress in fiscal year 1975 to demonstrate American concern for and to help meet the humanitarian and economic development needs of Palestinians in the occupied territories and to support U.S. efforts to peacefully resolve the Arab-Israeli conflict. The importance of the A.I.D. program has increased as a result of the depressed economy of the WB/G, growing unemployment, inflation, decreased funding from Arab states, the economic and social impact of the ongoing Palestinian Intifada (uprising) since late 1987, and the cancellation of Jordan's WB/G Development Program in July 1988.[2]

---

[1] A.I.D. Four Major Initiatives for the 1990's and Mission Statement, December 1990

[2] Congressional Presentation, Fiscal Year 1990, Main Volume (i.e., Introduction)

The WB/G program goals have been defined to:

- develop skills in training, agriculture, rural development and income-generating capabilities
- develop health services including public health
- encourage self-help projects that can build up the physical and social infrastructure
- promote economic growth through facilitating market entry, market access, management and production in the agricultural and manufacturing sectors; stimulating financial market development and community-based income generation
- create a more favorable policy environment for individuals and enterprises
- increase the capacity of public and non-public institutions to support economic activity
- improve social services such as health and education

The following chart illustrates the WB/G program for its 15 years of existence broken down by private voluntary organization, charitable organization, or program. The chart was prepared and included financial information as of July 30, 1990.

Organization	Life of the Project	Percentage
Agricultural Cooperative Development International	$9,187,000	6%
American-Mideast Educational and Training Services	32,766,000	21%
American Near East Refugee Aid	24,723,000	15%
Catholic Relief Services	17,822,000	11%
Holy Land Christian Mission	4,394,000	3%
International Executive Service	235,000	.1%
Management Development Program	375,000	.2%
Save the Children Federation	20,888,000	13%
Society for the Care of the Handicapped	3,873,000	2%
Small Projects Fund	592,000	.3%
Sector Studies in Health	412,000	.2%
Project Development and Support	983,000	1%
Food for Peace PL 480 Title II	25,000,000	15.2%
Jordan West Bank Development	18,500,000	12%
	$159,750,000	100%

The Assistant Administrator, Bureau for Europe and Near East (AA/ENE), has the monitoring and management responsibilities for the program. However, the program has been implemented without the benefit of A.I.D. day-to-day field supervision and the absence of an A.I.D. office; this function being performed by the State Department staff in Jerusalem (West Bank) and Tel Aviv (Gaza). To assist AA/ENE, a Working Group was established in 1987 to manage the program. It was the Working Group's responsibility to review proposals submitted by the various PVOs, to determine the merit of each project submitted, and determine whether such a project would be consistent with the A.I.D. priorities and U.S. foreign policy concerns. Once approved, A.I.D. would budget funds for the project and the overall coordination of the program was managed from Washington by the Working Group in conjunction with the State Department. Field oversight and monitoring of the program was accomplished by staff at the U.S. Consulate General in Jerusalem and the U.S. Embassy in Tel Aviv, with occasional short-term site visits by Working Group staff and project evaluation teams. The Working Group was officially disbanded in 1989, but the need to meet informally and discuss the management of the program persisted and intensified. The field oversight responsibilities remained the same. In September 1991, with the growth and increased visibility of the program and increasing Congressional concern over the lack of A.I.D. representation at the country level, the State Department agreed to the establishment of an "A.I.D. Representative" in Jerusalem in order to monitor and manage the field operations of the programs more closely and effectively.

The "A.I.D. Representative" is responsible for the following:

- planning, designing and implementing the economic assistance in the West Bank; the geographical responsibility of the "A.I.D. Representative" is limited to the West Bank with the U.S. Embassy in Tel Aviv continuing to perform A.I.D. functions in Gaza
- monitoring, evaluating and reporting on the implementation of the economic assistance program
- acting as a liaison official to the U.S. Embassy in Tel Aviv, the PVOs and private sector representatives
- planning and preparing overall program budgets for A.I.D. and Congressional approval
- directing preparation of programmatic documents for A.I.D. review such as Country Strategy Statements
- providing analyses to the Consulate General in Jerusalem, U.S. Embassy in Tel Aviv, and A.I.D. on evolving economic and political conditions in the West Bank relevant to A.I.D.'s programs

As noted above, the "A.I.D. Representative" is to act as a liaison official to the U.S. Consulate in Jerusalem, and on an as requested basis by the U.S. Embassy in Tel Aviv. However, all official relations with the Government of Israel are handled by the U.S. Embassy in Tel Aviv.

B. The West Bank/Gaza Environment

The West Bank is the size of an average U.S. county while Gaza is 28 miles long by 5 miles wide with a population density akin to Hong Kong. The population of the two territories was estimated in 1987 to be 1.7 million, with the West Bank at 1,068,000 residents and Gaza at 633,000. This represents an 83 percent increase in the West Bank and a 62 percent increase in Gaza over the previous census that was taken in 1967. Another important demographic factor is that 46 percent of the West Bank population and 48 percent of Gaza's population are children under the age of 14[3]. These numbers have increased even further due to the influx of large numbers of displaced Palestinians returning home as a result of the Gulf War. The need for the A.I.D. program has never been as great as it is today.

C. Save the Children Federation, Incorporated

Save the Children Federation, Incorporated (SC), is a non-profit organization, established in 1932 to provide services to children and communities throughout the world. Although, the work SC performs differs by program and location, their principles of community development and self-help remain consistent. SC's programs are based on a life-cycle approach that focuses on providing an environment for children that will enable them to experience a better life from birth through adulthood. SC's activities include family health, prenatal care, early childhood development, education and teen counseling programs.

SC has been operating in the WB/G since 1977 and has received approximately $21,000,000 in economic assistance from A.I.D. under the WB/G program. SC provides communities in the WB/G with assistance to strengthen urban infrastructure, agriculture, education, and health services, that in turn, increases employment and educational opportunities for the Palestinian people.

SC, with financial assistance from A.I.D, provides many valuable projects in the WB/G region. Projects such as irrigation, water sanitation, road construction and repair of essential sewage facilities are just a few examples of the activities administered by SC. Additionally, SC assists schools, day-care and community centers, in providing after-school recreational programs and vocational training for the youth. SC also participates in emergency relief efforts by providing crucial supplies to victims during times of crisis. Items such as milk, medical supplies and educational materials have been provided to Palestinian people during such times.

---

[3] U.S. Economic Assistance to the West Bank and Gaza: A Positive Contribution to the Palestinian people from the American people, U.S. AID, March 1989.

During the audit period, two cooperative agreements were operational. The Rural and Community Development Program cooperative agreement (NEB-0183-A-00-4073-00) began in 1984 and was established to assist the Palestinians in developing and implementing projects that will improve the social and economic conditions of local communities. The program is comprised of the following subproject components: Community and Home Infrastructure; Food Production and Agriculture; Education and Human Resources Development; Health and Nutrition; Enterprise; Resource Conservation; and Refugee and Disaster Relief.

The Revolving Loan Fund (ANE-0159-A-00-6060-00) was operational from 1986 through 1989. Loans under this agreement were designed to provide a source of development capital for farmers and small-scale entrepreneurs in the WB/G. The program provided Palestinians with the opportunity to acquire funds that they would otherwise have been unable to obtain and had benefitted the farmers of the region with increased crop production. Additionally, the loan program maintained a very successful repayment rate of 90 percent. Before loans were made, each farmer was evaluated based on their individual need, the project they were to implement, and their ability to repay the loan. The funds received either as principal repayment or interest earned were used by SC to initiate new loans.

SC is headquartered in Westport, Connecticut and has two field offices within the WB/G region.

In Westport, the Assistant Regional Director of Operations - Middle East, was SC's former WB/G Field Office Director and is able to relate first hand to the difficulties of operating a program within the WB/G. He is responsible for program implementation and oversees SC's middle east activities. The Program Officer prepares and submits semi-annual progress reports to A.I.D. These reports contain the results of WB/G program in relation to their respective goals and objectives. These reports contain pertinent information about the programs in the WB/G, such as: the program's accomplishments; impact of the project on those receiving its benefits; problems or delays encountered; actions needed to resolve problems; and an overall financial summary of the subprojects.

The Comptroller has direct oversight responsibilities for SC's financial operations and develops and implements policies to ensure compliance with the financial reporting aspects of the cooperative agreement. The Director of Treasury Services prepares and submits financial reports to A.I.D., as well as monitors the cash position of SC field offices on a daily basis. The Assistant Director - Field Office performs reviews of the monthly reports that are submitted by the field offices.

The WB/G field offices are headed by the Field Office Director who is responsible for the monitoring and oversight of the day-to-day operations of the Jerusalem office and monitoring the program activities of the WB/G. The Program

5

Coordinator in the Jerusalem office administers the West Bank projects and monitors their performance, status, and results.

The Field Office Accountant, maintains the general and subsidiary ledgers, performs bank reconciliations and prepares the monthly disbursement reports that are forwarded to SC's headquarters.

The Gaza office activities are managed by co-program coordinators who together are responsible for the projects implemented in Gaza and for the day-to-day operations of the Gaza office. The Gaza office operates virtually independently from the Jerusalem office. However, monthly reports are sent to the Jerusalem office for incorporation into the country-wide reports forwarded to SC headquarters.

In fiscal year 1990, SC's field offices instituted a new system for monitoring the status of projects in the WB/G through the implementation of the Planning, Evaluation, Monitoring Schedule (PEMS). PEMS is a system that enables project coordinators to monitor and evaluate project status and is designed to provide an illustration of current program activity in relation to planned on both a quarterly and an annual basis. Weekly meetings are held with the project coordinators to discuss the status of projects and any problems that have been encountered during implementation. SC's field offices utilize project tracking reports to monitor and evaluate expenditures for projects. The report tracks cumulative disbursements for all projects by region on a monthly basis to ensure adherence with project budgets. Thus, providing the project coordinators with a management tool to monitor and evaluate project expenditures. However, due to SC's unorganized filing procedures for subproject disbursements, they were unable to locate supporting documentation for a number of subproject disbursements as reported in PEMS. The documentation was located in various places and files, documentation for A.I.D. and non-A.I.D. reimbursed expenditures were filed together making it difficult to segregate one from the other. The method of filing this documentation is not efficient or conducive for an audit. It required sizable amounts of time and effort to trace the disbursements even when the documentation was available and, as a result, we have provided SC with Recommendation 3.

The SC WB/G field offices perform their accounting and financial reporting functions manually. They maintain a number of subsidiary ledgers, general ledgers and prepare various monthly reports. The procedures used require the duplication of work especially for the reports that are sent to the home office. For example, the information contained on the monthly reports must go through the following steps before it is in the proper format. First, disbursement information is entered in the subsidiary ledger, then the totals are accumulated and recorded into the general ledger. Then the information from the general ledger is entered into a computerized spreadsheet in the format required by the

home office. If there was an automated system, information of this type would only have to be recorded once.

We also noted the following deficiencies with the accounting system for recording and filing information:

- it is very time consuming (as described above);
- the audit trail that is formed is hard to follow. The handwritten entries in the general ledger are extremely hard to follow. Although, the use of subsidiary ledgers has made this somewhat less cumbersome.
- it does not allow for efficient recording and tracking of disbursements.

Automating the accounting functions in the field offices would greatly reduce the amount of time and effort involved in the monthly reporting process and would allow additional time to be spent on other important accounting functions such as review and reconciliation procedures. The Jerusalem office informed us that they have been waiting several years for an accounting software package to be developed by SC's headquarters but at this time, none has been provided.

D. Objectives

The objective of the engagement was to perform a financial-related audit of SC's cooperative agreements during the period of October 1, 1987 through September 30, 1990. A financial-related audit includes determining (1) whether financial reports and related items, such as elements, accounts or funds are fairly presented, (2) whether financial information is presented in accordance with established or stated criteria, and (3) whether the entity has adhered to specific compliance requirements.[4] Specific engagement objectives were to determine whether:

- the schedules of financial assistance were presented fairly in accordance with generally accepted accounting principles
- SC's internal control structure provides reasonable assurance of complying with federal regulations
- SC has complied with the applicable laws and regulations that have been included in the special and standard provisions of the cooperative agreements

E. Scope and Methodology

The scope of the audit covered two cooperative agreements for the period of October 1, 1987 through September 30, 1990 (NEB-0183-A-OO-4073-00); and October 1, 1987 through December 30, 1989 (ANE-0159-A-OO-6060-00). Total

---

[4] Government Auditing Standards by the Comptroller General of the United States, 1988 Revision.

disbursements for each cooperative agreement were approximately $4,239,000 and $130,000, respectively, during the period of our audit.

The audit was conducted in accordance with generally accepted auditing standards and *Government Auditing Standards* issued by the Comptroller General of the United States and included such tests of the accounting records as we considered appropriate. As a part of our examination, we obtained an understanding of the internal control structure and performed an assessment of control risk as part of the financial-related audit of the cooperative agreement activity for the period of our audit. Further, we reviewed the SC's compliance with applicable laws and regulations as included in the cooperative provisions that have a material effect on the schedules of financial assistance.

We performed our testing at both the SC's headquarters office in Westport, Connecticut and SC's field offices in Jerusalem and Gaza during the months of July through September 1991. The work performed in Westport consisted primarily of testing headquarter disbursements, internal controls, financial reporting, budget monitoring, and grant administration. Our testing in WB/G focused on examining supporting documentation for field office expenditures and was performed in SC's Jerusalem office. Additionally, we tested internal controls and reviewed project administration.

During the audit, we used sampling techniques to test whether or not the cooperative agreement activity was properly supported with sufficient documentation and in compliance with the provisions of the cooperative agreement and to determine the reasonableness of selected disbursements. In general, the selection of individual transactions utilized a judgmental sampling technique that was structured to test large disbursements to maximize our coverage of total disbursements tested and to obtain audit satisfaction that the costs were allowable, in compliance with the cooperative agreement, A.I.D. regulations and that the internal control structure was in place and operating effectively.

The following chart illustrates the audit coverage obtained on each cooperative agreement:

COVERAGE	
COOPERATIVE AGREEMENT NUMBER	DISBURSEMENTS
NEB-0183-A-00-4073-00	$4,238,800
ANE-1059-A-00-6060-00	130,485
	$4,369,285
AUDIT COVERAGE	$2,890,899
PERCENTAGE	66%

Additional audit procedures performed throughout the engagement included the following:

- review of the cooperative agreement, A.I.D. Handbook 13, OMB Circulars A-110 and A-122
- review of prior audit reports covering SC's WB/G activities
- detail tests of transaction activity for allowability, reasonableness, and allocability
- tests of SC's internal control structure in monitoring, managing and reporting the cooperative activity
- detail tests for specific compliance with the cooperative provisions

We discussed the findings and recommendations in this report with SC management throughout the engagement both in Westport, Connecticut and in Jerusalem. At the conclusion of the WB/G field work we held a preliminary closeout on August 21, 1991 with the field office director Randall Harshbarger and field office administrator Mira Rizek in Jerusalem. Additionally, at the completion of the engagement on November 21, 1991 we held an exit conference with members of SC's management in Westport, Connecticut. Further, we discussed the report verbally with members of ENE Bureau, A.I.D.'s Office of the Inspector General, and members of the State Department's Israel Desk. Their comments on the draft report have been considered in finalizing the report while SC's comments have been provided in Appendix A.

F. Organization of the Report

Section II presents the Report of Independent Accountants and **Section III** presents the Schedules of Financial Assistance for each cooperative agreement. In **Section IV** is the Report on Internal Controls which describes the reportable conditions identified as a result of this financial-related audit. **Section V** of the report presents the Report on Compliance with Laws and Regulations which is followed by **Appendix A**, SC's comments on the financial-related audit.

9'

Office of Government Services
1801 K Street, N.W.
Washington, DC 20006

Telephone 202 296 0800

Price Waterhouse

Report of Independent Accountants

We have audited the accompanying "Schedules of Financial Assistance" of Save the Children Federation, Incorporated (SC) for the period October 1, 1987 through September 30, 1990. These schedules are the responsibility of SC's management. Our responsibility is to express an opinion on the schedules based on our audit.

We conducted our audit in accordance with generally accepted auditing standards and *Government Auditing Standards* issued by the Comptroller General of the United States. These standards require that we plan and perform the audit to obtain reasonable assurance about whether the schedules are free of material misstatement. An audit includes examining, on a test basis, evidence supporting the amounts and disclosures in the schedules of financial assistance. An audit also includes assessing the accounting principles used and significant estimates made by the management, as well as evaluating the overall presentation of the schedules of financial assistance. We believe that our audit provides a reasonable basis for our opinion.

The accompanying schedules present the LOC drawdowns and expenditures reported during the audit period and are in accordance with the requirements of the Agency for International Development cooperative agreement numbers NEB-0183-A-00-4073-00 and ANE-0159-A-00-6060-00. Furthermore, as described in Note 2, Basis of Presentation, the schedules are not intended to be a presentation of SC's financial position, results of its operations or changes in its fund balance in accordance with generally accepted accounting principles.

In our opinion, the schedules referred to above present fairly in all material respects, SC's letter of credit drawdowns and expenditures for cooperative agreements numbers NEB-0183-A-00-4093-00 and ANE-0159-A-00-6060-00 for the period October 1, 1987 through September 30, 1990 in conformity with the requirements of the cooperative agreements.

As described in Note 2, Basis of Presentation, the accompanying schedules include only letter of credit drawdowns and expenditures and are not intended to present SC's financial position, results of its operations or changes in its fund balance in accordance with generally accepted accounting principles.

Price Waterhouse

November 15, 1991

10

Save the Children Federation
Schedule of Financial Assistance
NEB-0183-A-OO-4073-00
October 1, 1987 through September 30, 1990

		Questioned Costs (Note 5)			
	Actual	**Ineligible**		**Unsupported**	
REVENUE:					
LOC Drawdowns	$4,154,515				
EXPENDITURES:					
Sub-Projects	$2,918,952	$112,622	(a)	39,713	(b)
Personnel	851,831				
Travel/Conference	143,611			5,101	(c)
Consultants/Tech. Asst.	48,142			2,126	(d)
Capital Assets	29,376				
Other Direct Costs	276,264			1,485	(e)
	$4,268,176	$112,622		$48,425	

See accompanying notes to statements.

Save the Children Federation
Schedule of Financial Assistance
ANE-0159-A-OO-6060-00
October 1, 1987 through December 30, 1989

		Questioned Costs	
	Actual	**Ineligible**	**Unsupported**
REVENUE:			
LOC Drawdowns	$130,485		
EXPENDITURES:			
Personnel	$98,742		
Office Expenses	27,807		
Technical Assistance			
Capital Assets	3,936		
Direct Aid			
	$130,485	$-0-	$-0-

See accompanying notes to statements.

12

Note 1 - The Organization

Save the Children Federation, Incorporated (SC), established in 1932, maintains offices in the United States and throughout the world with its headquarters located in Westport, Connecticut. SC is an voluntary nonsectarian, nonprofit organization that provides direct services for children and community self-help assistance.

SC began operating in the West Bank and Gaza in 1977. SC has two field offices in the WB/G area, one in Jerusalem and one in Gaza and employs approximately 25 people between the two offices.

SC assists Palestinian organizations in providing their communities with crucial health and welfare services, in addition to providing employment and educational opportunities. The types of programs operating in the WB/G include:

Revolving Loan Fund	Health and Nutrition
Community & Home Infrastructure	Enterprise
Food Production and Agriculture	Resource Conservation
Education & Human Resource Devel.	Refugee and Disaster Relief

Note 2 - Basis of Presentation

The schedules are not intended to be a presentation of SC's financial position, results of its operations or changes in its fund balance in accordance with generally accepted accounting principles. Rather, the schedules present the LOC drawdowns and expenditures reported during the audit period and were prepared in accordance with the financial reporting provisions of the cooperative agreements.

Note 3 - Purpose of Cooperative Agreements

NEB-0183-A-OO-4073-00: The purpose of the Rural and Community Develop Program is to assist and encourage community and other local groups in the WB/G in the selection, planning, implementation and the evaluation of projects which will improve the social and economic conditions of the local communities.

ANE-0159-A-OO-6060-00: The purpose of this cooperative agreement was to establish a revolving loan fund to provide a source of development capital for farmers and small-scale entrepreneurs in the West Bank and Gaza.

Note 4 - Objectives of the Cooperative Agreements

NEB-0183-A-OO-4073-00: The objectives of this cooperative agreement are to provide support for activities in the WB/G basic program areas of basic needs, rural economic development and institutional development. To assist projects in agriculture and marketing, water resource development, health and sanitation, and child and youth development. The main objectives of this cooperative agreement are as follows:

- help community groups assess their collective needs and resources and design projects which will make the best use of these resources in meeting their needs
- help local groups secure the resources needed to carry out such projects, including both locally gathered and externally donated resources.
- assist these groups to become more self-reliant, resourceful and creative in using these resources which are available to meet these needs
- enable local groups to continue, extend and replicate this approach, relying to an ever greater extent on the locally available human, organizational, and financial resources
- help stimulate the conditions for more self-reliant communities and more effective community leadership, through participation in innovative projects, fostering of contacts with sources of technical assistance, and training in principles of effective project design and implementation

ANE-0159-A-OO-6060-00: The primary objectives of the revolving loan fund are to:

- promote the development of small-scale rural enterprises and income generating agricultural activities in the WB/G
- encourage farmers and small businessmen to invest more of their own capital in productive activities
- expand the capacity of the local economy to provide jobs
- stimulate experiments in crop diversification and broaden the agricultural economic base of the WB/G
- initiate the development of an institutional structure capable of providing credit for a broad range of productive activities

Note 5 - Questioned Costs (NEB-0183-A-OO-4073-00)

Under the Inspector General Act Amendments of 1988, questioned costs are defined as an all-inclusive term that includes the following types of costs claimed under Federal contracts, grants and cooperative agreements:

- **Ineligible** - costs that the auditor considers to be potentially unallowable. This category includes amounts for:
  - items that are a violation of a provision of a law, regulation, contract, grant, cooperative agreement, or document governing the expenditure of funds
  - items which, although not specifically unallowable, are determined to be unreasonable or unnecessary for the intended purpose (waste or abuse)
- **Unsupported** - costs for which the auditor is unable to gather sufficient, competent, or relevant evidence to determine their allowability.

(a) Subprojects

This amount represents value-added-tax payments made on subproject expenditures. The following table shows the amount of VAT paid on each project.

Project #	VAT
247	$4,083
248	8,770
281	3,522
284	300
299	1,720
300	69,590
301	24,637
	$112,622

15

(b) Project Costs

This amount represents unsupported field office project expenditures as follows:

Difference in Project Tracking Reports (Chart I)	$37,457
Unsupported Disbursements (Chart II)	2,256
	$39,713

SC prepares a Project Expenditures Tracking Report which reflects the expenditures for each project by month. We selected several projects from this list to test whether the disbursements were properly supported, reasonable and in compliance with the cooperative agreement. The amounts in Chart I represent the difference between the amount reported on the Project Expenditures Tracking Report and the amount of project expenditures for which SC was able to provide supporting documentation.

Chart I

Project #	Project Name	Difference
299	Sewage System for WB	$3,294
281	Fencing Cultivated & Grazing Areas	3,393
282	Household Animal Production	14,170
324	Hebron R/C Pediatric Referral	2,297
283	Multi-Purpose Water Conservation	8,882
162	Gaza Neighborhood Sewage	5,421
		$37,457

Chart II

Date	Project #	Voucher #	Description	Amount
10/87	299		Materials	$431
12/87	299		Materials	195
3/90	282	365	Chickens	1,080
3/90	162	109	Materials	550
				$2,256

(c) **Travel & Transportation Expenditures**

This amount is comprised of the following unsupported travel and transportation expenditures:

Date	Voucher #	Description	Amount
12/89	138	Air Ticket	$1,380
12/89	71	Air Ticket	1,336
1/90	224	Air Ticket	795
12/87	40	Auto Operation	533
7/88	505	Car Repair	200
7/88	504	Car Repair	300
	503	Car Repair	300
7/88	495	Car Repair	257
			$5,101

(d) **Consultants**

This amount is comprised of the following unsupported consulting expenditures:

Date	Voucher #	Description	Amount
11/87		Consultant	$1,201
12/87	95	Consultant	925
			$2,126

(e) **Other Direct Costs**

This amount is made up of the following unsupported expenditures:

Date	Voucher #	Description	Amount
8/88	610	Publications	$841
1/88		Advertisements	644
			$1,485

Office of Government Services
1801 K Street, N.W.
Washington, DC 20006

Telephone 202 296 0800

Price Waterhouse

Report on Internal Controls

We have audited the accompanying "Schedules of Financial Assistance" of Save the Children Federation, Incorporated (SC) for the period October 1, 1987 through September 30, 1990 and have issued our report thereon dated November 15, 1991.

We conducted our audit in accordance with generally accepted auditing standards and the standards for financial audits contained in *Government Auditing Standards* issued by the Comptroller General of the United States. Those standards require that we plan and perform the audit to obtain reasonable assurance about whether the schedules are free of material misstatement and about whether SC complied with laws and regulatory noncompliance which would be material to the cooperative agreements.

In planning and performing our audit of the schedules of financial assistance of SC for the audit period, we considered its internal control structure in order to determine our auditing procedures for the purpose of expressing our opinion on the schedules of financial assistance and not to provide assurance on the internal control structure.

The management of SC is responsible for establishing and maintaining an internal control structure. In fulfilling this responsibility, estimates and judgements by management are required to assess the expected benefits and related costs of internal control structure policies and procedures. The objectives of an internal control structure are to provide management with reasonable, but not absolute, assurance that the assets are safeguarded against loss from unauthorized use or disposition, and that transactions are executed in accordance with management's authorization and recorded properly to permit the preparation of the schedules of financial assistance in accordance with the requirements of the Agency for International Development's cooperative agreement numbers NEB-0183-A-OO-4073-00 and ANE-0159-A-OO-6060-00 and that the cooperative agreements are managed in compliance with applicable laws and regulations. Because of inherent limitations in any internal control structure, errors or irregularities may nevertheless occur and not be detected. Also, projection of any evaluation of the structure to future periods is subject to the risk that procedures may

become inadequate because of changes in conditions or that the effectiveness of the design and operation of policies and procedures may deteriorate.

For the purpose of this report, we have classified the significant internal control structure policies and procedures in the categories of disbursement and procurement operations and financial reporting. For all the control categories listed above, we obtained an understanding of the design of relevant policies and procedures and whether they have been placed in operation, and we assessed control risk.

We noted certain matters involving the internal control structure and its operation that we consider to be reportable conditions under standards established by the American Institute of Certified Public Accountants. Reportable conditions involve matters coming to our attention relating to significant deficiencies in the design or operation of the internal control structure that, in our judgement, could adversely affect the organization's ability to record, process, summarize, and report financial data consistent with the assertions of management in the schedules of financial assistance or to administer the cooperative agreements in accordance with applicable laws and regulations. Our audit disclosed three reportable conditions identified on pages IV-3 through IV-8.

A material weakness is a reportable condition in which the design or operation of one or more of the internal control structure elements does not reduce to a relatively low level, the risk that errors or irregularities in amounts that would be material in relation to the schedules of financial assistance being audited or that noncompliance with laws and regulations that would be material to the cooperative agreements may occur and not be detected within a timely period by employees in the normal course of performing their assigned functions.

Our consideration of the internal control structure would not necessarily disclose all matters in the internal control structure that might be reportable conditions and accordingly, would not necessarily disclose all reportable conditions that are also considered to be material weaknesses as defined above. However, we believe none of the reportable conditions described above is a material weakness.

This report is intended for the information of the Agency for International Development. However, this report is a matter of public record and its distribution is not limited.

Price Waterhouse

November 15, 1991

Finding 1 — SC has reported value-added taxes paid as a cost under the cooperative agreement.

This issue is complex and affects every A.I.D. - supported organization operating in the West Bank and Gaza. A.I.D. normally would have worked out refund arrangements with the host country and included them within a bilateral agreement. This issue includes the use of A.I.D. funds for the payment of taxes and the requirement that SC obtain approval for development activities undertaken.

We selected a sample of project expenses to test the allowability of these costs and identified approximately $112,000 of value-added taxes (VAT). In researching these payments, SC was unable to determine whether refund requests had ever been filed, refunds received or if the Government of Israel (GOI) was holding up the refund. In 1988, GOI approved the exemption of VAT and custom duties for domestic and imported purchases used in A.I.D. financed development activities. Office of Management and Budget (OMB) Circular A-122 states that any tax for which an exemption is available is "unallowable" for inclusion as a cost of the cooperative agreement. The cause of this problem can be attributed to several factors such as (1) SC sometimes waits until the project is completed before a VAT refund is requested, and (2) SC has no standard procedures for the preparation and monitoring of refund requests. The effect, in its simplest terms, is that A.I.D. funds are being used to pay taxes.

During the audit, we identified that the majority of project expense invoices included VAT paid by the contractor or vendor to the GOI. The total of each invoice including the VAT is subsequently reported as a cost under the cooperative agreement. In documenting the procedures followed, we were advised that VAT refunds are sometimes not requested until projects are completed. Typically, projects may take in excess of one year to complete.

Additionally, SC has not established procedures for tracking VAT paid to its subsequent refund. The Jerusalem office showed us correspondence with the GOI relating to VAT refunds but SC was unable to reconcile these amounts to outstanding requests. In discussing this issue with field office management, it was apparent that they were not adequately tracking the VAT activity. In addressing this issue, we would expect that when payments include VAT, SC should either (1) not include VAT as a cost of the cooperative agreement, or (2) establish a receivable from the GOI, follow the appropriate procedures to request a refund, and file for a refund in a timely manner. We did observe that in cases where refunds were received, they were credited to the cooperative agreement and properly accounted for.

In our testing of a sample of project expenses, we identified approximately $112,000 of contractor payments for VAT. SC was unable to determine if refund requests had been filed for or had ever been received. As a result, we have identified these costs as questionable. Our sample, which included both high and small dollar vouchers, tested approximately 73 percent of all project expenses for the audit period.

As a rule, A.I.D. policy prohibits the payment of taxes. The Israeli Customs and VAT divisions issued regulations that exempt all international PVOs from paying VAT on imports and domestic purchases provided the purchases are used for development projects. The procedures are discussed in the December 14, 1988 memorandum to all WB/G PVO representatives from Mr. Jake Walles and are graphically illustrated in a flow chart. The narrative procedures and flow chart are provided in Exhibit I. The cooperative agreement states that all recipients must comply with OMB Circular A-122, "Cost Principles for Non-Profit Organizations." The OMB Circular states that "the payment of taxes to local governments are allowable, except for taxes from which exemptions are available to the organizations directly or which are available to the organization based on an exemption afforded the Government and when the awarding agency makes available the necessary exemptions."

SC does not have an established system for applying for or monitoring VAT refund requests, and therefore, we were unable to determine the refund status of VAT payments. Standard procedures for the preparation and subsequent monitoring of VAT refund requests are critical to ensure that VAT refunds are eventually received and utilized for further development activities.

To help in this process we have provided Attachment A which is a suggested tool for reporting to the cooperative agreement officer the status of VAT payments. The schedule requires SC to report VAT paid, reimbursed and days outstanding on a quarterly basis. The form, we believe, will allow SC and A.I.D. to monitor VAT payments and refunds more effectively.

Recommendation 1

To address this problem, we recommend SC perform the following:

1.1 File refund requests as soon as possible and regularly.

1.2 Prepare an analysis of VAT paid since the exemption became available and reconcile amounts paid to the amounts refunded.

21

1.3 Request a refund from the GOI for VAT paid but never refunded, based upon the analysis.

1.4 Establish standard procedures for the preparation and monitoring of refund requests.

We also recommend that the A.I.D. Cooperative Officer require SC to report quarterly the status of VAT paid and VAT refund requests outstanding (See Attachment A).

* * * * *

Finding 2 — A.I.D. cooperative agreements absorb 100 percent of SC's indirect field office expenses

In the field, we noted that indirect costs such as rent, telephone, gas coupons, etc., were being charged 100% to the A.I.D. cooperative agreements. Based on our work, we understand that the WB/G field offices operate both A.I.D and non-A.I.D. programs. Therefore, indirect costs should be allocated to all activities that benefit based on a reasonable allocation method.

During our audit, we reviewed SC direct and indirect cost methodology to ascertain whether the methods used by SC to allocate indirect costs were in accordance with the cost principles promulgated in OMB Circular A-122. We discovered that SC charges 100% of indirect costs in operating the WB/G operations to the A.I.D. cooperative agreements. This practice of charging only A.I.D. programs results in an inappropriate application of the cost accounting principles and an overcharge to A.I.D. of approximately $22,000, assuming non-A.I.D. activities average approximately ten percent in the WB/G. Indirect costs should be allocated to those programs benefitting from such costs on a equitable basis.

During the exit conference, we were told by SC's management that instead of charging overhead to the cooperative agreements, SC charged, with an advanced agreement from A.I.D., all costs (indirect and direct) associated with operating the West Bank and Gaza offices to the A.I.D. cooperative agreement. We believe this practice results in the cooperative agreement being charged less than what may have been charged had SC charged overhead to cooperative agreement. However, we were unable to obtain any documentation between SC and A.I.D. describing the advance agreement.

22

Recommendation 2

We recommend that SC and A.I.D. either document the advance agreement or:

2.1 SC should be required to perform an analysis of the levels of A.I.D. and non-A.I.D activity.

2.2 SC should refund A.I.D. for the indirect costs that should have been charged to non-A.I.D. activity.

2.3 The allocation process developed above should be updated yearly and the A.I.D. cooperatives should only be charged for their fair and reasonable share of the indirect costs.

* * * * *

Finding 3 — SC's field office financial management system needs improvement.

During our testing, we noted several weaknesses in SC's field offices financial management system. Specifically, the general ledger contained a number of misclassifications of vendor payments and errors in postings. In other cases, we noted that payment vouchers did not contain a voucher number, source of funding (A.I.D. or Non - A.I.D., even though the form calls for this information) or proper authorization. Additionally, for administrative costs, there is no space on the payment voucher for an account number or line item to be charged, resulting in misclassifications and incorrect entries in SC's general ledger. Finally, the field offices do not maintain check registers to monitor and reconcile field office disbursements.

The provisions of the cooperative agreement, states that *"the grantee's management system shall provide for the following (1) accurate, current, and complete disclosure, (2) records that identify adequately the source and application of funds, (3) effective control over and accountability for all funds, property and other assets".*

While in the field, we encountered a number of problems relating SC's financial management system. For example, the field offices perform the accounting and financial reporting functions manually. They maintain a number of subsidiary ledgers, general ledgers and prepare various monthly reports. The procedures used require the duplication of work especially for the reports that are sent to the home office. The amount of time and effort

required to trace information from the general ledger was extensive. The handwritten journal entries were barely legible and the supporting documentation was filed in a variety of places. The field office personnel had difficulties in locating supporting documentation due to the lack of organization of their filing system.

Another problem was encountered when we attempted to trace project expenditures to the relating supporting documentation. Files with supporting documentation are maintained for each project, however, there can be a number of files for each project and each file contains various documents such as proposals, correspondence, blue prints, payment vouchers, invoices, etc. For one particular project, we had to locate and assemble supporting documentation from nine separate files. If a project had more than one file, the supporting documentation (payment vouchers and invoices) for A.I.D. reimbursed expenditures could be found in any one of the files. Furthermore, documentation for both A.I.D. and non-A.I.D. expenditures were found mixed together throughout the files. Finally, it appeared to our staff that SC was not sure exactly how many files there were for any particular project or where the supporting documentation could be found.

SC's field office in Jerusalem indicated that they have been waiting several years for a new accounting system that is being developed by SC's headquarters. Although an automated accounting system will increase efficiency, without a properly functioning internal control structure and financial management system, the benefits derived from the addition of a new accounting system would be negated.

Recommendation 3

We recommend that SC perform the following steps:

3.1 Establish written policies and procedures for the WB/G field office financial management systems.

3.2 Develop a standardized chart of accounts with a description of activity to ensure that disbursements are consistently classified.

3.3 Clearly identify account classifications for disbursements on the payment vouchers.

3.4 Utilize check registers that include the proper check number, date, payee, amount, and a brief description of the expenditure.

3.5 Implement management review procedures to ensure entries are correctly posted in the field office general ledger and that monthly reconciliations are performed

3.6 Have SC's internal audit group perform semi-annual reviews of the status of this recommendation and report the results of the review to A.I.D.

* * * * *

25

DOMESTIC PURCHASES OF GOODS
(WITH FORM MB 374)

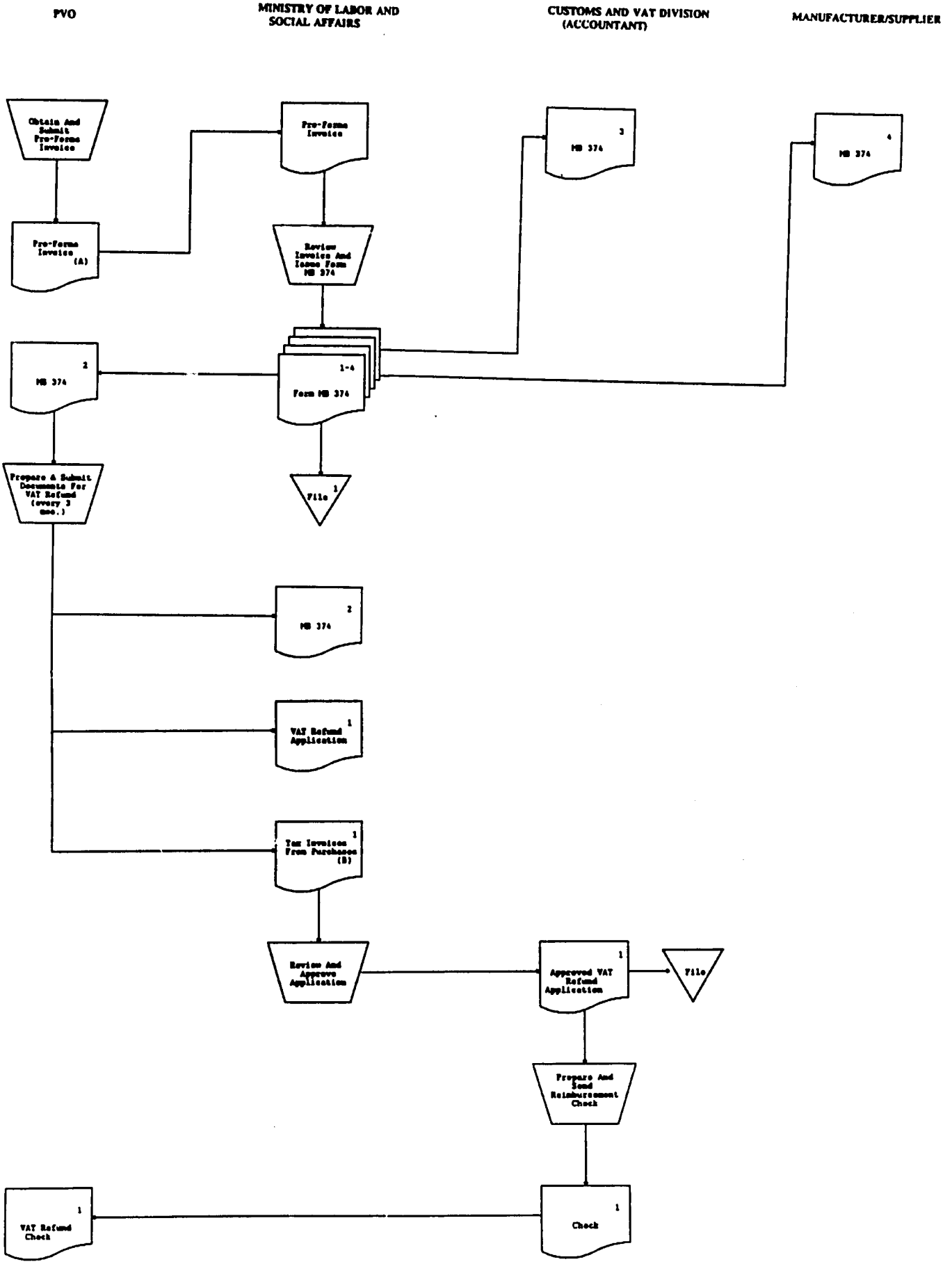

(A) The pro-forma invoice is submitted on behalf of the supplier and describes the merchandise to be purchased.

(B) Applicable only for goods not services.

26

DOMESTIC PURCHASES OF GOODS
(WITHOUT FORM MB 374*)

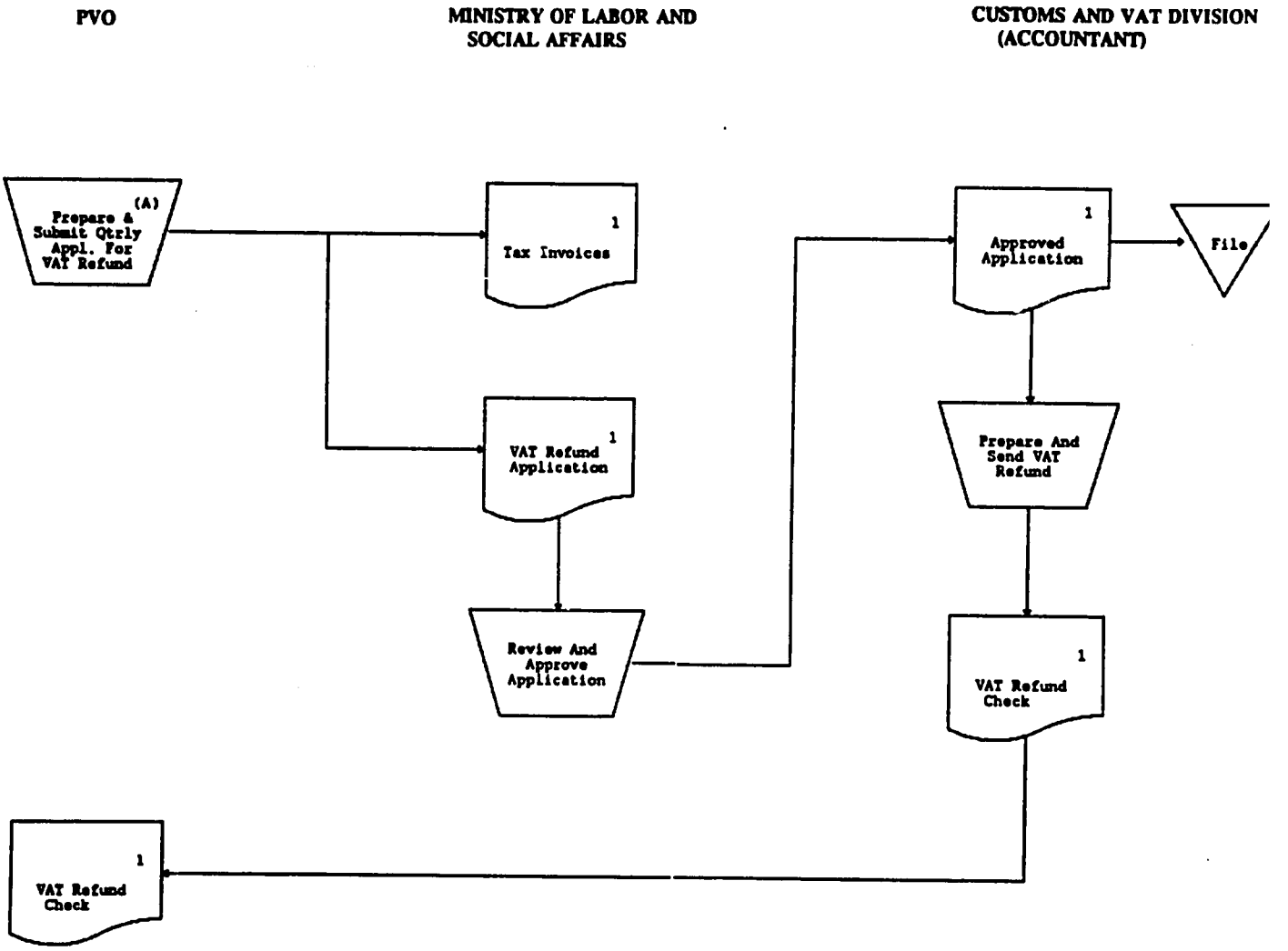

(A) Applicable only for goods not services.

* A Form MB 374 is not required for domestic purchases in small amounts.

Imported Goods
(Including vehicles)

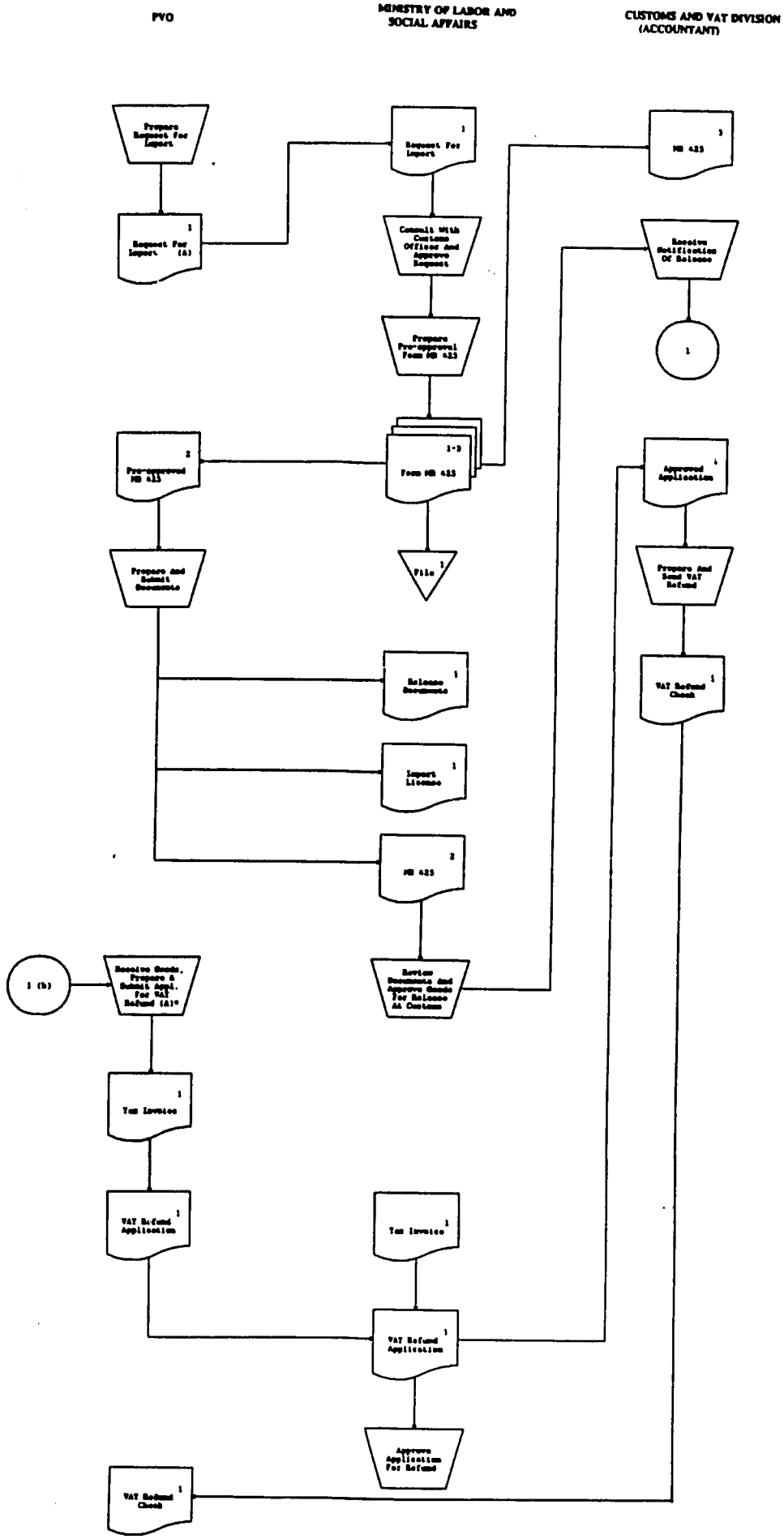

Embassy of the United States of America

December 14, 1988

MEMORANDUM

TO: WB/G PVO Representatives

FROM: Jake Walles

SUBJECT: PVO Customs and Tax Exemption

The Embassy has obtained copies of regulations issued by the Israeli Customs and VAT Division on October 31, 1988 establishing an exemption from customs duties and taxes for purchases by PVOs related to development projects. The exemption applies both to imports and to domestic purchases. A copy of these regulations, along with an unofficial Embassy translation, is attached for your information. Also attached is a copy of Form MB 425 and an unofficial Embassy translation of it.

Please let me know if you have any questions or encounter any difficulties in obtaining this exemption.

attachments:

as stated

cc: CONGEN Jerusalem - Liane Dorsey

STATE OF ISRAEL
CUSTOMS AND VAT DIVISION

TO ALL THE DIVISON'S UNITS AND TO THE PUBLIC

IN GAZETTE 496, FOLLOWING SECTION 36.211 (PARAG. 12) IMPORTS:

36.212 - EXEMPTION FOR INTERNATIONAL WELFARE ORGANIZATIONS ACCORDING TO ITEM 17 OF THE CUSTOMS TARIFF.

212.1 THIS SECTION DEALS WITH THE PROCEDURE FOR APPROVING EXEMPTIONS FOR INTERNATIONAL WELFARE ORGANIZATIONS DETAILED HEREAFTER IN THIS SECTION. THE SPECIFIED INTERNATIONAL WELFARE ORGANIZATIONS ARE ENTITLED TO EXEMPTION FROM CUSTOMS DUTIES ON IMPORTED GOODS AS NOTED IN THE ABOVE ITEM, AS WELL AS FROM PURCHASE TAX AND FROM VAT ON IMPORTS AND IN THE PURCHASE OF DOMESTIC PRODUCTS.

212.2 THE CONDITIONS FOR THE EXEMPTION ACCORDING TO ITEM 17 ARE AS FOLLOWS:

A) THE ORGANIZATIONS WERE RECOGNIZED BY THE DIRECTORS GENERAL OF THE MINISTRY OF LABOR AND SOCIAL AFFAIRS, THE MINISTRY OF FINANCE AND THE MINISTRY OF DEFENSE FOR THE PURPOSE OF RELEASING GOODS IN IMPORTS OR FOR DOMESTIC PURCHASES.

THE NAMES OF THE ABOVE MENTIONED ORGANIZATIONS ARE DETAILED BELOW IN APPENDIX 36/B.

B) THE GOODS AND THEIR QUANTITIES HAVE BEEN APPROVED PRIOR TO THE IMPORT OR THE DOMESTIC PURCHASE BY THE AUTHORIZED PERSON AT THE MINISTRY OF LABOR AND SOCIAL AFFAIRS (THE LIST OF PERSONS AUTHORIZED TO APPROVE THE ABOVE SAID EXEMPTIONS IS, HEREWITH, PROVIDED IN APPENDIX 36/C).

C) THE GOODS ARE RELEASED WITHIN THE FRAMEWORK OF A CONDITIONAL EXEMPTION.

212.3 PROCEDURE FOR THE RELEASE OF IMPORTED GOODS:

A) FOR THE RELEASE OF IMPORTED GOODS IN CONDITIONAL EXEMPTION, THE ORGANIZATION WILL SUBMIT, IN ADDITION TO THE REGULAR RELEASE DOCUMENTS AND IMPORT LICENSE, A FORM MB 425 APPROVED BY THE AUTHORIZED PERSONS AT THE MINISTRY OF LABOR AND SOCIAL AFFAIRS (APPENDIX 36/C) AS WELL AS BY THE PERSON AUTHORIZED ON BEHALF OF THE COORDINATOR OF OPERATIONS IN THE ADMINISTERED AREAS.

THESE SIGNATURES WILL APPEAR AT THE PLACE DESIGNATED FOR SIGNATURE OF THE CONDITIONAL EXEMPTION UNIT; NEXT TO THE SIGNATURE WILL APPEAR THE STAMP OF THE MINISTRY OF LABOR AND SOCIAL AFFAIRS. (THE CONDITIONAL EXEMPTION UNIT DOES NOT DEAL WITH THE PRIOR APPROVAL).

B) A COPY OF THE APPROVED FORM MB 425 WILL REMAIN AT THE MINISTRY OF LABOR AND SOCIAL AFFAIRS FOR FOLLOW-UP; AN ADDITIONAL COPY WILL BE TRANSFERRED BY THE MINISTRY OF LABOR AND SOCIAL AFFAIRS TO THE CONDITIONAL EXEMPTION UNIT AT THE CUSTOMS HOUSE JERUSALEM FOR FOLLOW-UP AS TO THE USE OF THE GOODS. IN ADDITION, THE IMPORT RECORDINGS WILL BE TRANSFERRED AS CUSTOMARY IN CONDITIONAL EXEMPTION BY THE STATIONS TO THE CUSTOMS HOUSE JERUSALEM.

212.4 VAT ON IMPORTS.

GOODS APPROVED FOR RELEASE UNDER ITEM 17 ARE NOT VAT EXEMPT. THEREFORE, THE CUSTOMS HOUSES WILL HAVE TO SEE TO THE COVERAGE OF THE VAT THROUGH THE DIVISION'S ACCOUNTANT, WHO WILL ALLOCATE FOR THE ISSUE AN ADEQUATE SUM (THERE IS NO NEED TO MENTION IN PARTICULAR ON THE FORM THE MATTER OF THE VAT COVERAGE FROM THE FUND).

212.5 APPROVAL FOR EXEMPTION IN DOMESTIC PRODUCTION (EXCLUDING FUEL).

A) FOR THE PURPOSE OF OBTAINING AN EXEMPTION FROM PURCHASE TAX ON ACQUISITIONS FROM DOMESTIC MANUFACTURE, THE ORGANIZATION CONCERNED WILL SUBMIT TO THE MINISTRY OF LABOR AND SOCIAL AFFAIRS A PRO-FORMA INVOICE ON BEHALF OF THE MANUFACTURER/SUPPLIER DESCRIBING THE MERCHANDISE WHICH THE ORGANIZATION WISHES TO ACQUIRE.

Office of Government Services
1801 K Street, N.W.
Washington, DC 20006

Telephone 202 296 0800

Price Waterhouse

Report on Compliance

We have audited the "Schedules of Financial Assistance" of Save the Children Federation, Incorporated (SC) for the period October 1, 1987 through September 30, 1990 and have issued our report thereon dated November 15, 1991.

We conducted our audit in accordance with generally accepted auditing standards and the standards for financial audits contained in *Government Auditing Standards* issued by the Comptroller General of the United States. Those standards require that we plan and perform the audit to obtain reasonable assurance about whether the schedules of financial assistance are free of material misstatement.

Compliance with laws, regulations, contracts, grants, cooperative agreements, and binding policies and procedures applicable to SC is the responsibility of SC's management. As part of our audit, we performed tests of SC's compliance with certain provisions of laws, regulations, contracts, cooperative agreements. These tests were of compliance with the special and standard provisions as included in the cooperative agreements (Numbers NEB-0183-A-00-4073-00 and ANE-0159-A-00-6060-00), the applicable sections of A.I.D. Handbook 13 — Grants, and OMB A-122 — Cost Principles for Non-Profit Institutions. However, the objective of our audit of the schedules of financial assistance was not to provide an opinion on overall compliance with such provisions. Accordingly, we do not express such an opinion.

The results of our tests indicate that with respect to the items tested SC complied, in all material respects, with the provisions referred to in the third paragraph of this report. With respect to items not tested, nothing came to our attention that caused us to believe that SC had not complied, in all material respects, with those provisions. However, we noted certain immaterial instances of noncompliance that have been reported as Attachment A to this report.

This report is intended for the information of the Agency for International Development. However, this report is a matter of public record and its distribution is not limited.

Price Waterhouse

November 15, 1991

Agency for International Development
Save The Children Federation, Inc.
Immaterial Instance of Noncompliance

Finding 1 - SC does not maintain complete A.I.D. - financed property listings to comply with the cooperative agreement.

SC's A.I.D.- financed nonexpendable property listings maintained by the Jerusalem and Gaza field offices are not in compliance with the provisions of the cooperative agreement. Specifically, the listing is incomplete with respect to the requirements set forth in A.I.D. Handbook 13, that requires the organization to maintain a property listing for A.I.D.- financed property. The provisions require the records to contain the following items:

- description
- serial number
- source of property (cooperative)
- title to property
- acquisition date
- percentage of Federal Participation
- location, use and condition
- unit acquisition cost
- disposition data: date, sales price

There are two separate listings maintained by SC's field offices; one for the Jerusalem office and one for the Gaza office. Although the Jerusalem listing was much more complete than the Gaza office listing with respect to the A.I.D. regulations, it was deficient in the following areas:

- identification number is not always recorded
- source of property (cooperative agreement #) is missing
- does not indicate who the title vests with (SC or Federal Government)
- does not provide the location, use, and condition of the property
- does not include the required disposition data

Agency for International Development
Save The Children Federation, Inc.
Immaterial Instance of Noncompliance

The Gaza property listing only included the following items:

- description
- condition
- Over or under $500

To ensure compliance with the requirement we would recommend SC:

1.1 Educate the field office employees of the property management requirements set forth in the provisions of the cooperative agreement and Handbook 13.

1.2 Maintain the inventory listing in accordance with the requirements.

1.3 Develop a standard form that is completed each time A.I.D. - financed property is acquired. The form should contain all required information as outlined in A.I.D. Handbook 13.

1.4 Perform annual physical inventories of A.I.D. - financed property and reconcile the property listing to the physical inventory taken. Report to A.I.D. all deficiencies.

* * * * *

- 34

Save the Children®

54 Wilton Road
P.O. Box 950
Westport, CT 06881 USA
(203) 221-4000

January 8, 1991

Price Waterhouse
Office of Government Services
1801 K Street, N.W.
Washington, DC 20006

The attached memorandum responds to your draft report of the financial related audit of Save the Children Federation, Inc.'s (SC) A.I.D. activities in West Bank and Gaza. As we discussed with you, our organization is committed to having effective financial and operating systems throughout all our field offices. To this end, during the past year we developed manuals and held international training sessions for all field offices on grant compliance.

We appreciate this opportunity to respond to your findings and assure you that, where applicable, we will consider your comments in improving systems throughout our organization.

Sincerely,

Julia Gilmour

Julia Gilmour
Director Audit and Operations Support

SC West Bank and Gaza
Draft Audit Report Response

A QUESTIONED COSTS

INELIGIBLE COSTS

- Value-added taxes (VAT) paid $112,622

It is our understanding that during the period under audit requests were made for certain major VAT expenses and where refunds were received, these were credited to the project. As recommended, we will prepare an analysis of VAT paid since the exemption became available and reconcile amounts paid to the amounts refunded and request refunds for amounts paid but never refunded. This exercise will be performed for the two largest projects, Projects 300 and 301.

Subsequent to the audit, the field office (FO) implemented procedures to ensure that in future VAT is properly claimed and monitored.

UNSUPPORTED COSTS

- Difference in project tracking reports $37,457

This amount represents the sum of unsupported costs based on certain project files which include supporting vouchers for projects by year. Our review of the Price Waterhouse workpapers indicated that for purposes of this analysis, the audit team did not take into account that the files reviewed also included projects which were oversupported by $28,404. Certain of these included documentation for the same projects identified as unsupported, but in the previous or following year. In addition, the workpapers indicate that for Project # 282, the difference should only be $6,025 and not $14,170 as noted.

Consequently, it is our belief that while the analysis indicates poor filing of documentation, it should not form a basis for identifying unsupported disbursements.

- Unsupported disbursements $10,968

As a result of burglaries in the FO and the events in the area, the administration systems in the FO have not been maintained consistently and we have been unable to locate

additional supporting documentation for these disbursements. It should be noted that authorized vouchers were available to support the amounts. We are confident that the expenses were properly incurred for the benefit of the FO.

B REPORT ON INTERNAL CONTROLS

Finding 1 : SC Has Reported VAT Paid as a Cost Under the Cooperative Agreement

Refer to A above.

Finding 2 : A.I.D. Cooperative Agreements Absorb 100% of SC's Indirect Field Office Expenses

As indicated in the report, had SC recovered indirect costs through the application of the official negotiated indirect cost recovery rate, the resulting recovery would most likely have been significantly in excess of the potential cost of not properly allocating indirect costs among grants.

During the period being audited, the following indirect expenses were incurred in the West Bank and Gaza office and were paid for out of non-A.I.D. funds :

1988 - $ 25,530
1989 - $ 15,023
1990 - $ 80,480

While the FO has not used a proper allocation process, non-A.I.D. funding sources have been charged administration expenses. We do not believe that any misallocation of administration expenses among funding sources is significant.

The FO will in the future ensure that indirect expenses are allocated in a fair and reasonable manner.

Finding 3 : SC's Field Office Financial Management System Needs Improvement

As a result of the Intifada, the FO has experienced some instability with respect to staffing and administration controls. We believe that we now have the appropriate management team in place to effect significant improvement in procedures. As part of this effort, the FO is currently developing a FO accounting manual.

The FO will be included in the rotational audit schedule of the internal audit group.

C REPORT ON COMPLIANCE

Finding 1 : SC Does Not Maintain Complete A.I.D.- Financed Property Listings to Comply With the Cooperative Agreement

During 1991, SC held grant management training courses for all its international field office directors and their financial/administration managers. This training focused in particular on A.I.D. regulations and included compliance with respect to property listing requirements.

During the annual audit process, detailed listings of SC and Federal grant funded property are requested by Home Office. This is part of a physical inventory exercise that is performed by all field offices on an annual basis. The schedules include all Handbook 13 requirements. We are currently investigating omissions and incorrect information on these listings. Any material deficiencies will be reported to A.I.D. as part of the A-133 audit process.

APPENDIX II

REPORT DISTRIBUTION LIST

	No. of Copies
Director, Office of Procurement, FA/OP	5
Assistant Administrator, Bureau for Near East, AA/NE	2
Associate Administrator, Directorate for Finance and Administration, AA/FA	1
Office of Financial Management, FA/FM/CONT	2
Office of Press Relations, XA/PR	2
Office of Legislative Affairs, LEG	1
Office of the General Counsel, GC	1
Director, Office of Middle East Affairs, NE/ENA	1
Center for Development Information and Evaluation, POL/CDIE	3
Management Control Staff, FA/MCS	1
IG/A	1
AIG/A	1
AIG/I	1
IG/LC	1
IG/A/PPO	2
IG/A/PSA	1
RIG/A/C	1
RIG/A/D	1
RIG/A/E	1
RIG/A/N	1
RIG/A/S	1
RIG/A/T	1
RIG/A/V	1
RIG/A/EUR	1
RAO/M	1
IG/RM/C&R	5