PD-AAZ-400

DYNAMAC
CORPORATION

African Emergency Locust/ Grasshopper Assistance Project

Progress Report on the Results of Mali - Sudan Pesticide Testing Project

U.S. AID Contract # AFR-0517-C-00-7035-00
May 30, 1988

Prepared by:
Dynamac International, Inc.
The Dynamac Building
11140 Rockville Pike
Rockville, MD 20852

In association with:
Consortium for International Crop Protection
4321 Hartwick Road, Suite 404
College Park, MD 20740

Prepared for:
U.S. Aency for International Development
African Grasshopper/Locust Pesticide Testing Project

PD-AAZ-400
ISN 61514

DYNAMAC CORPORATION

February 1 - April 30, 1988
Progress Report on Results of
Mali - Sudan Pesticide Testing Project

Contract # AFR-0517-C-7035-00

Africa Emergency Locust/Grasshopper Assistance Project

May 30, 1988

Prepared by:
Dynamac International, Inc.
The Dynamac Building
11140 Rockville Pike
Rockville, MD 20852

In association with:
Consortium for International Crop Protection
4321 Hartwick Road, Suite 404
College Park, MD 20740

Prepared for:
U.S. Agency for International Development
African/Grasshopper/Locust Pesticide Testing Program

Table of Contents

Mali Progress Report 1

Sudan Progress Report. 2

Attachment 1: Expenditures to April 30th. 4

Attachment 2: Schedule for Next Quarter and Final Report. 5

Attachment 3: Proposed Outline for Final Report 6

Attachment 4: Field Reports . . . . . .

a. Project Summary 8
b. Field Office Report 12
c. Notes on Operation, etc 29
d. CICP Reports. 37
i. T. Schwartz - Reports. 41
ii. W. Yates - Applications. 50

Attachment 5 65

Mali - Progress Report
Period - March 31st - May 31

1. Residue Analysis has been completed by the University of Miami for samples collected in Mali. The data is being analyzed and interpreted into a report format for deliver to AID AFR/TK June 20th.

2. Michael Short continues to operate as field Manager for Dynamac in Bamako. He has been abled to maintain equipment and vehicles by AID Mali and has at Mission request conducted a complete (re)inventory of all materials for delivery to Aid/PV.

3. Dynamac wishes to advise AFR/TK that Michael Short is leaving Mali on June 15th at which time his contract will have terminated. Dynamac requests that AID take necessary action to take over responsibility for these materials and vehicles.

Sudan - Progress Report

The following report covers the period February 1 - April 30, 1988.

Accomplishments

During this period the Dynamac Team accomplished the following tasks:

1. All supplies arrived in Sudan.(Feb - April)

2. Supplies needed for camp set up were purchase on the local market.

3. Plane(s) and vehicles were rented.(Feb - March)

4. Materials were transported to camp site.

5. Camp was set up. February 27

6. Consultant arrived on site from Micronair - England (Feb. 15)
   CICP - USA (Feb. 20 - 28)
   Local experts - U. of Khartoum (Feb. 27)

7. Permits were acquired from government for field tests, populations were advised of Tests. (March)

8. Coordination was continued with AID Mission, Government of Sudan, Locust Steering Committee and Chemical Companies. Feb. - March

9. Environmental calibration tests were conducted for all concerned. Feb. - March

10. Environmental spraying was conducted and completed for 6 chemicals. (March - April) (Two chemicals were not sent by Companies.)

11. Efficacy tests were cancelled on the basis of multiple opinions regarding lack of locusts and for terrain conditions. (March)

12. Field reports were prepared for efficacy and environment. (March - April)

13. All field team members returned to Khartoum and U.S. (April - May 1)

14. Samples sent (frozen) to U. of Miami.

15. Khartoum field office closing begins (materials turned over to PPD Ministry of Agriculture, vendors paid, etc.). (April 20 - May 1)

16. Khartoum office closed. Project Manager Stancioff and other U.S. personnel return to U.S.

Problems Encountered

1. Dynamac not able to conduct efficacy due to lack of locust and other containing conditions.

2. Plane hired through Government of Sudan nonperforming due to nonlegal statues of plane and pilot.

3. Dynamac Team member shot at by Sudanese. Dynamac guest house robbed.

4. Customs problems acute and finally resolved by AID Mission.

ANTICIPATED PROGRESS (May 1 - July 31)

1. Draft Reports will be prepared and delivered to AID.

2. Materials will be shipped to Sudan for PPD Lab in lieu of payment for analysis.

3. U. of Miami will continue sample analysis.

4. Dynamac will continue background studies on pesticides.

ATTACHMENTS

1. Expenditures to April 30th

2. Schedule for next quarter and Final Report

3. Proposed outline for Final Report

4. Field Reports

   a. Project Summary - Milestones, et.c (prepared for AID Sudan)
   b. Field Office report (summary given to Mission)
   c. Notes on operation, etc.
   d. CICP Reports
      i. T. Schwartz - Reports (Efficacy)
      ii. W. Yates - Applications

Financial Report for USAID Contract
No. AFR-0517-C-00-7035-00

May 20, 1987 - April 30, 1988

1. Expenditures

Description	Total Hours Expended	Total Dollars Expended
All tasks	11,535	$1,548,315.14

2. Funding

Amount Allocated	Amount Remaining	Estimated Cost
1,881,443	333,097	1,935,344

Amount remaining to be obligated

Amount requested (53,901)

DYNAMAC
CORPORATION

Dynamac Corporation
The Dynamac Building
11140 Rockville Pike
Rockville, Maryland 20852
Telephone: 301-468-2500
Telex: 248838

16 May 1988

AFRICA PESTICIDE TESTING PROJECT

PROPOSED SCHEDULE

1.	Complete Mali Report	
	- statistical analysis and graphing of Residue Data	
	- textual discussion of Residue Data	
	- incorporate new Residue Section and discussion in Mali Report	1 June
2.	Report to AID	
	- Mali addendum	
	- progress report on Sudan (trip reports) Quarterly Report	
	- recommendations for future projects	1 June
3.	Sudan Report	
	- select and learn data mgmt. and analysis system (SAS)	16 May
	- insect samples arrive from Khartoum	13 May
	- complete insect counts	13 June
	- complete data input to SAS	13 June
	- complete statistical analysis	11 July
	- complete Sudan Report	1 Aug
	- complete residue analysis at Miami	1 Dec
	- final Sudan Report	1 Jan
4.	Final Report (Composite)	
	- complete background review of pesticides	1 Aug
	- Final report Draft	1 Jan
	- Final report review by USAID	1-15 Jan
	- Final Composite Report	31 Jan

DYNAMAC
CORPORATION

Dynamac Corporation
The Dynamac Building
11140 Rockville Pike
Rockville, Maryland 20852
Telephone: 301-468-2500
Telex: 248838

16 May 1988

AFRICA PESTICIDE TESTING PROJECT

PROPOSED OUTLINES FOR FINAL REPORTS

1. Mali Report

2. Sudan Report

   1. Introduction
   2. Ecological Description of the Site
   3. Application Testing
   4. Locust Survey for Efficacy Testing
   5. Environmental Trials
      - 5.1 Test Design
      - 5.2 Pesticide Application
      - 5.3 Preliminary and Postspray Sampling
      - 5.4 Impacts on Birds
      - 5.5 Impacts on Nontarget Insects
        - 5.5.1 Impact on Diversity - Selectivity
        - 5.5.2 Impact on Beneficial Families
   6. Conclusions

3. Final Report (Composite)

   1. Introduction
   2. Mali Report
   3. Sudan Report
   4. Literature Review
      - 4.1 Bendiocarb
      - 4.2 Carbaryl
      - 4.3 Chlorpyrifos
      - 4.4 Diazinon
      - 4.5 Fenitrothion
      - 4.6 L-cyhalothrin
      - 4.7 Malathion
      - 4.8 Tralomethrin
   5. Assessment of Relative Efficacy
      - 5.1 Adequacy of Trials
      - 5.2 Application Rates as a Factor
      - 5.3 Conclusions
   6. Assessment of Relative Environmental Impact
      - 6.1 Adequacy of Trials
      - 6.2 Habitat as a Factor

6.3 Application History as a Factor
6.4 Assessment of Vertebrate Impacts
6.5 Assessment of Nontarget Insect Impacts
6.6 Assessment of Residual Activity
6.7 Relative Hazards by Pesticide
6.7.1 Mammalian Toxicity
6.7.2 Avian Toxicity
6.7.3 Number of other Taxa at Risk
6.7.4 Indiscriminate Effect on Insects
6.7.5 Impact on Beneficial Insect Families
6.7.6 Ecosystem Effects through Residual Activity
6.8 Conclusions
7. Recommendations

PROJECT SUMMARY - SUDAN PESTICIDE TESTING AND LOCUST CONTROL PROJECT

PROJECT NUMBER - AFR-0517-C-00-7035

To: USAID Khartoum ProjecT Officer

From: Dynamac International (Andrew Stancioff)

A. MILESTONES OF SUDAN PROJECT

1.	Contract AID Washington	June 1987
2.	Approval for Sudan Project from USAID Washington	Jan. 7th
3.	Arrival of Dynamac Team to prepare negotiate and if necessary sign agreement with GOS	Jan. 10th
4.	Arrival of logistical and administrative team, purchasing and setting up of files	Jan. 24th Feb. 20th
5.	Preparation of project budget (in country and schedule of activities) arrival of Dynamac Project Manager	Feb. 8th
6.	Preparation of aircraft (provided by PPD) by Micronair Spray Expert	Feb. 15-20th
7.	Arrival in Sudan of Scientific Personnel 3 from Dynamac, 4 from CICP	Feb. 20-24th
8.	Camp set up in Suakin then moved to Tokar and set up by Feb. 25th	Feb. 20-24th
9.	Meetings in Tokar to discuss efficacy campaign. Dynamac, PPD, CICP	Feb. 27th
10.	Trials begin with chemical company reps present	Feb. 29th
11.	Plots laid out for 6 chemicals (each sprayed 3 times) in Tokar Delta; 4 chemical at camp	Feb. 29-Mar 2nd
12.	Tokar Delta authorities and farmers warned of spraying	Feb. 29-Mar 2nd
13.	Team leaves for efficacy trials. Trials aborted due to lack of locust	Mar 3 -7th
14.	Environmental spraying completed.	April 10th
15.	Camp closed.	April 18th
16.	Scientific Personnel return to USA and England	April 15nd
17.	Samples and materials shipped to Khartoum.	April 22nd
18.	Administrative closing of project begins in Khartoum.	April 23rd
19.	Dynamac Project Manager arrives in Sudan for close down	April 26th
20.	350 samples delivered to PPD and 350 sent in dry ice to USA	April 30th
21.	Preparation of reports by staff and turn over of materials to PPD	April 26th May 10th
22.	Summary meeting with USAID	May 4th
23.	Draft project report to USAID and PPD	May 9th
24.	Project closed	May 10th
25.	Final report due	Jan. 1989

B. ACCOMPLISHMENTS

1. Testing of 6 pesticides for their effect on Sudanese environment.
2. Putting together a team of 15 scientists and support team of 15 Sudanese to conduct trials in Tokar.
3. Setting up camp and providing logistics support for above and 10 chemical company representatives.
4. Conducting tests, collecting data and samples under difficult conditions.
5. Producing 650 samples for analysis and shipping these frozen to USA.
6. Assisting PPD in improving its scientific and technical capabilities including improving the lab at Wad Medani by providing materials and equipment.
7. Training 6 PPD scientists in environmental data collection.
8. Amassing large amounts of environmental data.
9. Defining requirements for safety in future spray operations.
10. Operating under pressure and difficult conditions within time and budget constraint and without accidents.

C. ACKNOWLEDGEMENTS

P.P.D. - Khartoum
- Tokar
- Port Sudan
- Suakin
- Wad Medani
- Gebeit/Salala

USAID - Khartoum

U of Khartoum - Dr. Bashir

Steering Committee

D. PROBLEMS

1. Agreement with government not approved by Attorney General.
2. Import customs
3. Aircraft leased by PPD without permits.
4. Chemicals late
5. Reporting by PPD of limited value for efficacy.
6. Communications within Dynamac inter and intra office and field.
7. Tentative nature of AID Washington go ahead.
8. No advise by AID Washington to Sudan Mission of project start.
9. Dynamac contract not available to Mission.
10. Dynamac personnel on agreement team pushy and inexperienced.
11. Dynamac should have visited efficacy sites to verify after first visit.
12. Agreement with GOS might be more effective if cosigned by AID Mission.
13. Safety of people in sprayed area should be more carefully assured by government.

E. COST SUDAN PROGRAM

Disbursed in Sudan either in Dollar or Pounds	$159,100.00
Approved in Sudan and paid in $ from USA	47,800.00
	$206,900.00
Total Budgeted for Sudan Field Expenses	$238,500.00
Unused Balance	31,600.00

Delta Tokar Agricultural Corporation, announcement

This is to certify to the Delta farmers and public that it has been decided to undertake a spraying campaign on insects affecting agriculture by plane using poisonous pesticides.

As pesticides present danger to people and animals, we hereby you to keep far from the spraying zone and cover all water sources and wells inside the delta, and avoid bring ing grass from the sprayed areas, or grazing livestock there until 3 days subsequent to completion of the spraying operation.

Spraying operation start on: 9-17/3/88
In the following blots:

- Hand Foda blot: 2, 3, 5, 6, 8, 9, 11, 12, 14, 15, 17, 18.
- Hand Adrimbate blot: 1, 6, 11, 16, 21, 26.
- Hand Dlawbibay blot: 2, 3, 4, 26, 27, 28, 34, 35, 36, 42, 43, 44.
- Hand Brous blot: 2, 3, 4, 10, 11, 12, 18, 19,20, 26, 27, 28, 34, 35, 36, 42, 43, 44.
- Hand Daba Salim blot: 10, 1,, 12, 18, 19, 20, 26, 28, 34, 35, 36, 42, 43, 44.

Please be caution and consider this announcement for you and your animals safety.

Thank you

Babiller M. Ali
General Acting Director
Tokar Delta Corporation

Cc:

Resident Magistrate
Medical Officer, Tokar Hospital
Agric. Inspector-a. Tokar's North Sec.
b. Tokar's South Sec.
Head of PPD Locust Control Campaign
All tribes rep-Tokar
Dynamac International

Tokar's Chief Police
First Officer, Tokar North Hospital

PPD-North Khartoum
Agric. Union Secretary

Final Report (Field Office)
Sudan Pesticide Testing Project
Dynamac International
May 5, 1988
(Prepared by Michael and Andrew Stancioff

This report summarizes the following information:

1. Chronology of Events and Personnel

2. Activities Description

3. Financial Statement including:
   (a) Camp Expenses
   (b) Office Expenses
   (c) House Expenses
   (d) Other Expenses
   (e) Summary of monthly reconciliation
   (f) Inventory at EOP

4. Annexes including:
   (a) Proforma
   (b) Names and addresses

Chronology of Events and Personnel

1) 10/21/87 - 12/1/88 Dynamac Vice President Allan Hirsch visits Sudan to determine USAID and Plant Protection Department (PPD) interest in conducting the Pesticide Testing Project. Constraints encountered during visit: (1) Due to timing and communications problems, AID/SUDAN had not been advised of Hirsch's visit from AID/W, the project funding source (2) AID's key management person for locust work, Kate Farnsworth, was out of Khartoum during most of the visit (3) the Locust Steering Committee did not meet (4) the PPD was on strike until 11/28.

<u>Issues Raised During Visit</u>

(1) Mission Director Koehring stressed need for Dynamac to operate locally with Sudanese Pounds purchased from USAID due to Sudan's status as "near excess currency" country; i.e. the U.S. Mission in Sudan including USAID is holding excess pounds which it wishes to exchange with contractors in projects such as Dynamac's.

(2) Acting Director Dr. Zaroug of the PPD supported the concept of the project but cited the need for a technical plan which PPD could review and submit to the Ministry of Agriculture for final approval.

(3) The Head of the PPD Locust Section, Dr. Karrar, described conditions in the Tokar Delta saying the February would be a good time to start project activities and that locust breeding could continue into May. Karrar noted that location of locust outbreaks would determine where efficacy testing component of project should be sited. PPD scouting network was deemed capable of advising on location of outbreaks by January or February.

(4) Getting some of the Pesticides in country, particularly proposed pesticides that were not registered in the Sudan (Sevin ULV and Tralomethrin) was seen as a problematic, but solveable through working with country chemical representatives and Dr. Munir Butrous of the PPD.

(5) Discussion conducted with USAID AP/Do Ed Birgells and Lynne Keeys as to whether project agreement should be between AID and the GOS or Dynamac and the GOS. According to Hirsch's internal memo of 12/10/87, Birgell's feeling was that a memo of understanding between AID and the GOS may have been most appropriate under the circumstances.

(6) Lines of communication between FAO and DLCO representatives were established, with possible on the ground collaboration with FAO discussed.

(7) Contact with CICP consultant Larry Pinto on his Fenitrothion tests in Gedaref and on issues regarding residue sampling both in Sudan and the U.S., particularly in terms of logistical constraints.

(8) Determination of conditions in Tokar (potential project area). Former FAO coordinator Mark Gorta provided data concerning frequency of locust outbreaks on Red Sea Coast. Data indicated most reliable time for breeding populations December-January, which coincides with impassable road conditions in Delta area. In February-March spring breeding occurs less predictably, but with improved logistical conditions. On basis of this information tentative project start up for early February planned, with exact location of testable locust populations to await January PPD scouting reports.

(9) Base camp proposed for Port Sudan as it is head of regional government for project area.

(10) Advantages were weighed in using PPD vehicles (cost savings) versus commercial vehicles (freedom of movement assured in the event of a locust outbreak). Seen as a top priority for advance team.

(11) Regarding aircraft, FAO Consultant Mark Gorta advised against use of helicopters due to maintenance problems. Need for renting plan with "an immediate replacement" noted in event of breakdown. Best sources mentioned: Yadoun (Cessna 188 with Micronair AU5000). Ban Air Cessna 188 with Micronair AU5000), Pezetel (Antonov II with Micronair AU3000), Mohamed Wahab crop Protection Specialist. Due to time constraints no discussions were instigated.

(12) Scoping of revised technical plan to reflect (a) sampling problems with locusts (b) lessons learnt from Mali project. Consideration given to feasibility of caging hoppers and releasing on sprayed vegetation, along with releasing sprayed hoppers on unsprayed vegetation. Both of these seen as ancillary to (a) block spraying with sampling of transects (which would be sensitive to hopper band density despite band movement across transects) (b) spraying

and monitoring of individual bands if feasible (c) sampling approach targeted to specific beneficial insect groups.

(13) Identified that advance team should depart for Sudan early January to sign agreement with GOS, with actual field team brought in once logistics established and testable populations known to exist.

(14) Procedures for getting feedback on the technical plan's efficacy testing component outlined.

2) 1/10/88 Arrival Jeff Evans and Nick Hajjar in country. Objectives: (a) sign agreement with GOS and (b) begin to establish project's logistical infrastructure. Situation complicated by virtue of fact that AID/SUDAN had not seen a copy of Dynamac/AID/W agreement so that all particulars concerning money transfers from dollars to pounds and specific contractor rights/privileges were unknown. The agreement was drawn between Dynamac and the PPD directly, and not between USAID and the PPD, because the USAID Project Officer Sharon Fee hold that this was most appropriate given that this was a centrally funded project and was not part of the mission portfolio.

Important points in the agreement (see annex 1) included: enhanced PPD participation in the project through (a) supply of between 2-5 project vehicles, (b) provision of the aircraft, pilot, and AVgas required for 40 hours of flying, (c) analysis at the Wad Medani laboratory of pesticide residues from a portion of the samples (d) materials exoneration and project material expedition.

On Dynamac's side, per diems, housing, paying for the cost of residue analysis along with requisite lab materials, and a commitment for turning over all scientific materials and expendable items at EOP to the PPD was made.

3) 1/24/88 Arrival Field Logistican Paul Bernard. 1/26/88 arrival Field Operations Manager Michael Brown. Evans, Brown, and Bernard worked together for the next two weeks on securing office space and field staff housing in Khartoum, customs clearance of materials arrived at Airport, necessary permits to begin functioning in country, proforma invoices for supply needs anticipated, opening a local bank account, scoping of likely bottleneck areas previously unanticipated which were seen as potentially constraining to timely project implementation. The later included: (a) determination that most procurement should be made in country to realize time and cash savings (b) need for project staff to hand carry maximum of materials in and out of country to avoid notorious blockages at customs (c) note that status/dependability of PPD retained Ban Air Company uncertain requiring maintaining second company on retainer in the event of difficulties (d) indication that social feasibility of pesticides testing in regard to possible negative impact on local populations required greater consideration (e) emphasis on truck rental versus truck repair (of PPD vehicles) given parts shortages and uncertain overall dependability of PPD vehicles.

During this period Evans and Dr. Munir travelled to Port Sudan, Suakin, and Tokar to get an update on the locust situation and to determine where the field camp could best be sited. On return (2/5) they noted total absence of locusts in Tokar regions with the last rains one month prior. The only known locusts populations were in the Bebeit Mine area, one day's drive to the North of Port Sudan. Evans and Munir concurred for logistical reasons this are was not a feasible project site due to (a) area already largely sprayed (b) another aircraft on retainer would be needed at high cost (c) overland logistics very complicated constraining support (d) local water supplies severaly limited.

The possibility of a locust - free - environmental - only project was signalled to the home office of 2/21/88.

Brown and Evans met on 2/2/88 with USAID Mission Director John Koehring and Project Officer Sharon Fee to discuss administrative issues. They met separately with USAID comptroller Linda Martin to discuss dollar/Sudanese pound exchange issues.

4) 2/5/88 Project Manager Andrew Stancioff arrives in country. Met with USAID Project Manager Sharon Fee on 2/8/88 (see annex 2). Determines by 2/15/88 that Ban Air contract with PPD only valid until 2/29/88, with Dr. Munir attempting negotiation. Alert to potential need for additional funds to undertake spraying in event Ban Air can't/won't fly.

Overseas Office and Camp Equipment Purchases.
Prepares Local Budget Estimate at USD 238,500.

5) 2/15/88 Micronair Consultant Timonthy Sander arrives. Brings micronair AU5000 application monitor and installs on Cessna 188. Prepares notes on operation on the micronair spray system on Cessna 5T-AJ2 (see annex 3) describing micronair installation and calibration, chemical application rate settings, droplet size settings, preflight checks on the spray system, setting up the application monitor, inflight micronair operation instructions, post flight system maintenance.

6) 2/20/88 Notification to Dynamac/USA from Stancioff that locust situation still similar to early January's, with possibility of efficacy trials being reduced to primary chemicals. Locust infested area seemed unsuitable for environmental trials because terrain could not accommodate large plots design. As of 2/20, Bendiocarb, Malathion and Diazanon had not arrived in country. Discussions maintained with USAID/Sudan indicated their support for continued project given investment to date, PPD collaboration to date, and possibility of getting useful data out of the study. The desirability of aborting the project was questioned because (1) the hopper situation according to reports had improved (2) local government had already committed resources and energy to the project (3) there were no dissenting views from the Locust Steering Committee (4) 90% of materials to be used in camp and office already had been purchased including following expenditures and/or commitments: personnel USD 58,500, local rentals USD 40,300, goods purchased USD 53,000, services (micronair, airline tickets, freight, etc.) USD 31,200, totalling USD 183,000.

7) 2/21/88 Meeting between Southerland and Evans with Dr. Karrar of PPD yielded the following: (1) Karrar favored continuing project (2) based on 2/18 report 800 hectares in north were adult infested to medium density with low densities of hatchlings and eggs pods (3) low to medium densities occurring in most places, with small bands in the north as medium densities of 5-10 hoppers per m^2 reported in Wadi Oko (4) helicopter for locating bands would be available for locust expert Chris Hemming (5) sorghum in the Wadis was green (6) PPD would stop spraying in Wadi Oko and Wadi Diib where populations were laying.

8) 2/22/88 USAID mission requested PPD give final OK to tests. Karrar OK'd tests. He noted five bands were sited and other were forming. USAID was to prepare cable for AID/W on locust/project status.

9) 2/22/88 Evans and Southerland leave for Suakin.

10) 2/23/88 Stancioff, Dr. Munir leave for Suakin. Giraldi, and CICP consultants Schwartz and Kepner arrive.

11) 2/26/88 Word from Washington received that USAID still was concerned about possible need to terminate project unless it could be justified from a scientific as well as a political standpoint.

12) 3/1/88 Stancioff prepares multi-team member response to question on aborting mission or of continuing. Points noted: (a) area has been found with good insect, bird, infestations and in which testing can be conducted with good methods generating useful results (b) PPD would provide analysis of weather conditions demonstrating their "representativeness" compared to those expected in a locust outbreak (c) in technical plan the need for separate efficacy and environmental trials was realized together with need to modify project methodology based on better understanding of scientific and logistical constraints (d) a flexible efficacy program on restricted locust populations in the north coupled to a replicated environmental program in the more biotically diverse Tokar Delta would provide best data that a project of this nature and duration could likely generate (e) to attempt same project in another year and/or country is a likely to provide inferior data as it is to provide superior data (f) a green vegetated area with sufficient hectarage to accommodate three replicates of seven treatments has been marked for sampling, with high insect numbers and bird densities noted. Considered a major accomplishment to have found natural grassland areas to test thereby averting exposing large numbers of farmers, (yet it was noted that many farm families are living in fields, in these grassland areas.) (g) both PPD and the Tokar Delta Agricultural Authority had been extremely cooperative to date (h) environmental data should be obtained which accurately reflects the effects of locust control operations on an environmentally sensitive area (i) the suggestion to transport caged locusts from the north to Tokar was ruled out because of logistical constraints (locust probably dying before arrival in Tokar) along with being scientifically invalid (the cause and effect of caged locust mortality due stress versus pesticide toxicity would become muddled). Any toxicity persistence trials on locusts proposed for northern test site versus Tokar (j) in response to USAID/W request to provide options for project directions in the event there were not enough testable locust populations.

Project Manager Stancioff held the position that to impose new conditions on a research project midstream risks a prior; obviating potential objective results would be based on objective scientific procedure applied to changing conditions imposed by Sudanese circumstances. Thus the key would be in the process or scientific procedure employed. (k) Since efficacy and environmental testing would be necessarily split, a concern was in the paucity of data which would be generated on beneficial insect species which likely could not be representatively sampled on the environmental plots in the absence of locusts (l) the Scientific Manager Mark Southerland agreed with Stancioff that for political reasons and practical reasons (investment to date) the study should continue. In his opinion however, justification to continue on the bases of scientific criteria was more problematic due to the ambiguous locust situation, logistical difficulties, and the lateness of the season. (m) Field Operations Manager Michael Brown noted that the absence of threshold criteria for decisions making from a scientific standpoint should have been established before the team set out for the field. At this point since USAID/W expressed concern, determination of what they considered a testable locust population to be should be established using available information on hand. The problem of assessing "representativeness" of this year's weather so as to decide if field conditions were comparable to what they would be in a locust infestation year, if done in the absence of historical and vegetative data, could force project scientists into being overly conservative in their decision to continue or abort the project. That is, they may prefer to risk erring on the side of judging the year non-representative than to be accused of manipulating the incomplete or impressionistic available data so as to keep the project going. Taking the pragmatic stand assumed by both Stancioff and Southerland, Brown too thought this would be unfortunate given the PPD's position, investment to date, and the possibility for having research results (of some sort) emerge. (n) It was proposed that a meeting be held in Tokar including locust expert consultant Chris Hemming and Professor Bashir to analyse the available data and make a decision to go or abort. (o) it was noted that the FAO locust representatives met with team in Tokar on 2/27/-2/28 and expressed support for the program. (p) Thus, a shutdown would comprise (1) unequivocal PPD support, (2) the possibility for generating usefull data, and (3) the sure loss of our USD 300,000 invested in the project to date, together with further project closedown costs. (q) Camp status to date:

(1) Camp set up south of Tokar airstrip
(2) Air strip granded and marked
(3) Twenty plots marked for environmental
(4) Additional four plots identified and being marked
(5) Five chemicals arrived
(6) CICP personnel in camp.

13) 3/1/88 Chris Hemmings, Locust Consultant, and Wesley Yates, Application Experts, arrive in country.

14) 3/3/88 New data from PPD from 2/21/-2/28 period show total infested area in Gebeit Mine Wadi Oko/Wadi Diib area to be 1400 hectares with natural green vegetation and sorghum. Copulating egg laying adults

present at density of 3,000-5,0000 per hectare. Small groups of desert locusts present in bands over 250 hectares with densities of 10-15 hoppers per square meter.

A GTZ consulted returning from area confirmed hoppers there but logistics difficult.

CICP Consultant Chris Hemming, in regard to caged locust trials, notes that project premise was to conduct trials under natural conditions, not using cages. Concurrence from Yates and Stancioff. Discourages caged locust trials.

15) 3/5/88 Ongoing communications with home office concerning location of material shipments and Malathion. Completion and submission to Dynamac/Home Office of first financial statement.

16) 3/7/88 Updated PPD report from north received indicating for Wadi Diib 2600 hectares infested with 10 small bands per hectare with distance between bands at five meters. Labelled a medium density infestation, with hoppers in 1st-3rd instars. Vegetation indicated as good for bushes, grasses, and sorghum. Some 3rd-4th instars present yellow adults copulating and laying eggs. Temperature and humidity correct. For Wadi Oko: 400 bands on 1,500 hectares, medium infestation. Distance between band at 5 - 15 meters. 1st-5th instars present. Good vegetation cover 1500 hectares, with new hatchings imminent.

Based on 3/6/88 meeting, both Hemming and Bashir felt situation to be good for test if not excellent on the basis of available information. Given apparent logistical constraints, came up with a list of dos and don'ts. A tentative trial schedule and methodology was developed by concensus among Dynamac, CICP, PPD, and Dr. Bashir. Decided against using cages but enclosures would be during persistence trials especially. The possibility to conduct an additional 15 days of persistence trials was to be discussed with USAID/W.

Mark Southerland and CICP Team Leader Tom Schwartz submit the following:

(1) PPD reports locust infestation of 26,000 bands over 2600 hectares in Wadi Diib. 1st-3rd instars in medium density. 400 bands reported in Wadi Oko.

(2) Re environmental, 24 plots marked with four days of pretreatment sampling thru March 21. Favorable vegetative state and preliminary counts on-target species indicate potential for reasonable good impact data. Bird and insect numbers are relatively high.

(3) Given reported infestation, efficacy trials were designed to gather reliable data using large plot sub sampling techniques. Design open to modification based on on-site evaluation. Replicate treated and control bands to be 1, 6, 12, and 24 hours. Based on info from this phase 1 trial, a phase II persistence trial has been conceived.

(4) Expected results of Sudan Pesticide Testing Program: Environmental impact results expected to surpass those of Mali as more chemicals will have been tested including Bendiocarb and Fenitrothion. A plan for efficacy testing has been devised specifically to test contact mortality caused by th primary pesticide. A plan to test for continued 2 week control with secondary pesticides would use moveable field enclosures. Completion of the latter would require testing outside the first efficacy plots, and would require an additional 15 days. Despite myriad problems, trials have progressed well with valuable scientific data expected to be obtained.

17) 3/10/88 Malathion still not received incountry. Brown worked with local Malathion clearing agent on trying to track chemical down. Dealt with local Carbaryl agent who assists in clearing the latter. Of 2,300 liters shipped by Rhone Poulenc only 400 liters needed.

At Locust Steering Committee meeting with EEC Consultant Phil Symmonds noted that after travelling last week through Sufaiya/Salala region where Dynamac's efficacy team members were prospecting, he had seen nothing resembling 26,000 hopper bands over 2600 hectares. The fact that whatever locusts were there were buried under weeds beside mature sorghum forbode from his standpoint any possibility for conducting tests. Finally, the logistics of working in area were perceived as extremely difficult.

Brown noted that the 26,000 band estimate upon which Dynamac was basing its hopes had originated from PPD. Our staff had yet to comment on situation.

In a separate attempt to resolve outstanding problems pertaining to materials exoneration, the PPD had claimed that the original project agreement between the government of Sudan and Dynamac required revision. This because somehow it was determined at the Ministry of Finance that the original agreement had not been approved by the The Sudanese Attorney General's Office as required prior to signing. Thus, uncertainty lingered as to which Ministry line budget (if any) was to be debited for exoneration or custom's charges. This kept incoming project materials blocked at the airport.

18) 3/12/88 The spray company contracted to the PPD to undertake the trials, Ban Air, continued to have problems securing a renewed certificate of Airworthiness (C of A) for its airplane. The company had either not forseen the problem with C of A before setting out belatedly to Tokar, or else assumed that it could be easily reconciled in the field. Obtaining the C of A was proving to the contrary to be a cumbersome process which threatened to stall project operations.

Due to a forementioned exoneration problems, Carbaryl was just finally being cleared. Malathion meanwhile was only arriving with coordination between Dynamac and the American Cyanamid in country agent, Central Trading, Inc., to expedited clearance the following day.

Word received from Ciba-Geigy that on same day we were to have been contacted by Sudan Country rep by now and that Diazanon was supposed to have been in country.

19) 3/14/88 A shipment containing the project dry ice making machine which was to be used for production of dry ice for shipping of samples to U.S. Still had not been located. Without the machine it was not clear how dry ice for shipping samples out of country could be obtained.

A further three days of licensing problems for obtaining the C of A at Ban Air was envisioned. Rather than be allowed a temporary permit to finish the two days of spraying, Civil Aviation was requiring that the Ban Air pilot and plane fly to Khartoum for plane inspection.

Malathion that was to have arrived still had not.

Mark Southerland arrived from Tokar for an intended stay of several days.

20) 3/15/88 Request to cancel efficacy trials transmitted to Dynamac Home Office from Scientific Manager Mark Southerland based on efficacy team* reports that proposed field testing program totally unfeasible. Reasons (1) age of locust population and their distribution were unsuitable at northern PPD camp near Wadi Oko (2) hoppers confined to very dense sorghum stands under weeds, obviating mortality and survival estimation (3) adequate treatment of hoppers impossible due to inability of any spraying to penetrate the vegetation (4) causes for above: lateness of season dried grasses restricting locusts to dense crop sorghum using ground application discussed by efficacy team. Option of psudo-field trials using caged hoppers rejected. Behavioral study though would not satisfy efficacy trials objectives but could provide valuable information for control operations and future research trials. Southerland and Schwartz recommend recalling efficacy team however and disbanding for season.

Approval requested for continuing with environmental trials, necessitating shipment of residue samples in two weeks time. Update on US lab situation and possible dry ice import requested.

21) 3/16/88 Complications with continuing on with efficacy program discussed with Kate Farnsworth, responsible USAID project officer during Sharon Fee's absence. Farnsworth agreed with decision. Highlighted importance of assuring that any remaining pesticides from project not be lost, and that they be conserved in such a way that for small scale testing program could at some time be undertaken. Suggested possibility of AID providing freezer space for sample storage for a limited period of time.

22) 3/17/88 The problem with the grounded spray plane still was not resolved. Requested permission to explore direct contract situation with another company to finish spraying on what then were seen as the last two pesticides: Carbaryl and Malathion. According to Scientific Manager Mark Southerland, spraying of seventh chemical would reduce the number of replicates below the necessary level. With the spraying delay of the last two chemicals, contemporaneous controls would also be needed. Some controls already had lost data because of goat damage to traps. And Diazanon was not test material, as it was 2 year old PPD stock.

*Efficacy team consisted of Tom Schwartz, Dr. Bashir, Chris Hemming, Rod Kepner, PPD Staff.

23) 3/19/88 Hemming, Kepner, Yates arrive from Port Sudan. Prepared report on efficacy component and met with Kate Farnsworth, exhaustively recounting constraints on continuing the efficacy component.

24) 3/18/88 Receive message from Dynamac Washington indicating that all plans for shipping samples will be made from Washington.

25) 3/21/88 Ban Air spray plane still grounded, Civil Aviation would not grant extension of C of A without inspecting plane in Khartoum. Plane apparently left Tokar for Khartoum. Plane apparently left Tokar for Khartoum on previous day, though confirmation not given on its arrival by PPD.

26 3/22/88 Kepner and Yates leave country. Kepner and Hemming report on efficacy component prepared (see annex).

Wrote letter to PPD requesting their involvement in assisting in te resolution of exoneration snags. Requested clarification from Dynamac on status of Fisher lab equipment per Jeff Evans's 1/22 cable.

Submitted Nile Safaris quote of 10,966 USD for airfreight of dry ice in and out of Sudan together with samples to Miami via Dusseldorf (see section 4).

Sample composition for analysis in US lab identified as: 40% grass, 40% soil, 20% animal.

Receive OK to get proformas from other spraying vendors to complete spraying of remaining two pesticides.

27) 3/23/88 Send telex to Foil International requesting a proforma invoice for 9 hours spraying of remaining two pesticides.

28) 3/24/88 Breakdown of samples now provided as 45% grasses, 45% soil, 10% animal for 350 samples after remaining two pesticides sprayed.

Dr. Munir went to Ban Air and Civil Aviation with head of PPD Mr. Zaroug. The plane was still actually stuck in Sennar due to "sandstorms". A definite answer on the plane's status envisioned for 3/27.

Received Foil Int'l proforma for 25,000 USD for spraying the final pesticides. Requested proforma from Pezetel as well, a Polish company doing much of the crop spraying in Sudan.

Arranged for set up of HF radio in Khartoum office to facilitate communication with Tokar, particularly during the period of my imminent absence when Alice Tabin (Sy) would be alone. Until then, Brown had gone to PPD each day which while cumbersome, permitted continual following with PPD Khartoum staff involved in the project. This had been important due to spraying and exoneration problems.

29) 3/26/88 Submit cable summary to Dynamac on project activities to date to present in meeting with AID/W on 3/28 (see annex 5).

30 3/27/88 Signal Dynamac that airplane situation reached "point of no return". The Ban Air plane which was supposed to arrive in Khartoum was still in Sennar. Informed Dynamac that even if Ban Air plane came next day and arranged C of A, Field Project Manager would still not trust their return to Tokar before the year 2000.

Negotiated provisional agreement with Pezetel to spray for 8,000 USD the remaining two pesticides, with departure from Hasa Heisa to Tokar at 5 am on 3/30.

31) 3/28/88 Received authorization from Stancioff to contract with Pezetel. Stancioff advised that rationalizing purchase of more than 20,000 USD required for the lab equipment in Wad Medani was a problem at AID, despite evidence brought to bear by Dynamac on PPD effort in project-vehicles, aircraft, etc.-had lowered project costs. Dr. Munir requested to (a) choose priority item (b) purchase equipment with revenues generated from sample analysis.

32) 3/29/88 Contracted with Pezetel to complete spraying. Sole problem was that they had micronair AU3000 instead of AU5000. Project staff agreed more important to complete spraying at that point than to worry about details of micronair system.

Field staff insist that samples could not be be shipped by truck from Tokar to Khartoum since freezers would not operate on truck.

33) 3/30/88 Brown lest Hasa Heisa for Tokar at 5 am. At 10 am plane grounded in area around Eritrean Border, lost. Landed again at 12:30 pm in bush at indetermine area, with approximately 25 gallons of AVgas remaining. Passengers included Ikhlas Ali, two Polish mechanics, and the captain. After several hours of debate and tracking, determined plane location to be likely in a 30 km radius either to the north or south of Tokar. Brown argued for location to be to north based on mountain topography to west corresponding to map indications. The captain meanwhile felt on the basis of his flying time and route, to be to the south of Tokar. Once believing this, convincing him that his plane's presumed location to the south of Tokar did not correspond to the mileage flown and surrounding relief, was not simple.

When a vehicle approached in the distance at around 4 pm and one of the mechanics hastened to mount the Antonov 2's wing to fire warning flares, the vehicle disappeared, frightened that we were robbers. I suggested this possibility and this effort was abandoned. The Polish mechanic, became particularly perplexed on what to do since he was sure we were lost in Ethiopia. Yet to fire flares was likely attracting both the right and wrong kind of people.

Upon nightfall, a stream of vehicles proceeded south parallel to the mountain ridge to our west, and turned east subsequently some kilomters to the south of us. This confirmed the likelihood that we were to the north of Tokar.

34) 3/31/88 At. 5:15 am Brown, the captain, and one Polish mechanic walked for 2 hours through the bush to the point which appeared to be the closest passing point of the vehicles from the previous evening. Within 1/2 hour a vehicle passed. The driver indicated he was coming from Tokar. We proceed to walk three hours along the road in the direction of Tokar as a stream of over 30 trucks and pick ups passed us going the opposite direction towards Suakin. A bus finally came our way and delivered us to the police station in Tokar, which had been advised of our disappearance that morning.

By 12:30 pm we were in camp. Paul Bernard and a team drove the 30km out to the plane loaded with AVgas. The plane returned to the camp by 2pm, with Ikhlas Ali and the three man Polish crew.

At 5pm, an inspection of the plane indicated that there were engine problems on the plane and that spare parts would be needed.

The Dynamac field team decided immediately to dispatch a vehicle to Hasa Heisa to retrieve these parts so that the spraying could proceed.

That same day CICP efficacy team leader cum application expert (in the departure of Wesley Yates) Tom Schwartz was in the throes of a terrible malaria bout. Consideration was being given to an evacuation if his condition did not improve.

35) 4/1/88 Accounting reconciliation by Brown and Bernard done in camp for March camp operations. Discussion of logistical preparation required for shipping samples first from Tokar to Khartoum, then from Khartoum to the States, were held in the context of Project Manager Stancioff suggestions from Washington, and field staff preferences. The possibility of hiring Pezetel to fly the samples out of Tokar to either Hasa Heisa or Khartoum was seriously discussed.

Tom Schwartz after undergoing injection (chloroquine) was very sick.

36) 4/2/88 Tom Schwartz taken to hospital for IV injections. Returns seeming more stable, but decision made to take him immediately to Port Sudan. Notification given to Dynamac/Khartoum and USAID that a medevac may be required.

Brown and Assad Nabri, local expediter, take Schwartz to Port Suda. Nabri's father the local surgeon, said Tokar hospital had poisoned Schwartz unwittingly with a chloroquine overdose.

Spare parts still not arrived from Hasa Heisa to repair plane, list of PPD priority lab material requirements to conduct residue analysis transmitted to Washington (see annex7).

37) 4/3/88 Medevac for Schwartz called off as his condition stabilized. Schwartz and Brown fly to Khartoum on Sudan Airways same day.

38) 4/4/88 Message sent to Stancioff in DC that field staff opposed to shipping samples using wet ice, either from Tokar to Khartoum or Khartoum to London. If necessary preference was to ship without ice at all.

Brown sees Farnsworth at executive office personnel at AID to arrange for sample storage in AID freezers at the Khartoum North warehouse, anticipated for 4/5/ arrival of samples via Pezetel/Hasa Heisa. In Tokar, Pezetel plane fixed, Micronair calibrated, Carbaryl sprayed.

39) 4/5/88 Malathion sprayed. March financial report finalized and skypacked to home office.

Schwartz visits Embassy doctor and is okeyed.

40) 4/6/88 Dynamac/Khartoum and PPD staff retrieve samples flown in by Pezetel to Hasa Heisa. Reach USAID warehouse by 4:30 pm.

Stancioff authorized camp closure when Southerland satisfied with sampling completion and materials transported to Khartoum after local inventory made. OK given to dispensing with locally made materials (such as barrels, beds, chairs, etc.) in Tokar for the PPD.

41) 4/7/88 Spraying completed. Field team very satisfied with final two days. Confirm that 7 day sampling counts done as opposed to 15.

Shift in project emphasis towards arranging shipping logistics to get samples out of country, with dry ice to Miami lab. Possibilities of shipping with Nile Safari or British Airways samples cleared through Khartoum customs and waiting on tarmac for dry ice, and absorbed on outgoing BA flight to London three hours later.

Brown and Munir discuss necessary quarantine documents and airport custom's clearance required to arrange in-shipment of dry ice and outshipment of samples.

42) 4/10/88 Pezetel provides quote to fly samples from Tokar on a 650 USD/hr basis. Field staff support this. Camp closedown set for 4/10.

Brown in process of preparing interim report. Requests information from departing team member Dave Bettendorf. Discussion centers on spraying operations and difficulties encountered in regarding to assuring that all human and livestock populations vacated the areas to be sprayed prior to spraying. Need for reevaluation of safety guidelines in this type of enterprise noted, particularly when pastoral populations are involved.

43) 4/11/88 Stancioff OKs shipping with Pezetel from Tokar. Advises on his arranging dry ice shipment in from London with subsequent expedition from London to Miami through local clearing agent.

An incident in Minshia near the Dynamac house involving Field Operations Manager Michael Brown and a local resident forced abandonment of the house. Brown and a Japanese fried were assailed by a group of youth and subsequently by a man bearing a revolver. Several shots were fired and no one was hurt. The risk of subsequent attack forced decision to abandon the house premises (see annex 7).

44) 4/12/88 Bettendorf leaves Sudan.

45) 4/13/88 Munir removes micronair monitor from Ban Air plane and returns it to Dynamac.

Southerland, Evans, Giraldi arrive from Port Sudan.

46) 4/14/88 Discussion between Southerland, Evan, Giraldi and Brown concerning spraying operations and their impact on Tokar Delta farmers and agropastoralists, focus on adequacy of protective measures taken and actual impact.

47) 4/15/88 Southerland, Evans, Giraldi leave Sudan.

48) 4/16/88 Paul Bernard leads convoy to Khartoum from Tokar.

49) 4/19/88 Convoy arrives from Tokar consisting of 3 trucks and 2 land cruisers with all project field materials. Full inventory presented by Bernard to Brown. Materials and equipment stored in USAID/Khartoum North warehouse in room with samples.

Meeting held with Munir, Brown, and Attorney General's office to determine what legal validity signed agreement between Dynamac and PPD holds. Attorney General representative said agreement is in fact binding. Problem is with PPD and Ministry of Finance. PPD signed agreement without Attorney General's prior approval as per circular 59 instructions so for the latter, the die was already cast. Vis a vis the Ministry of Finance, they had already expedited exoneration of Dynamac's initiatal 95 piece shipment containing field materials, without Attorney General's office approval. Therefore the latter noted that their authorization to Finance not needed, as Finance has its own authority to exonerate and debit against the national budget. Consequently in the face of a fait accomplishments, the Attorney General's office refused to become involved in the affair.

50) 4/20/88 Convoy arrives from Tokar. All materials unloaded at USAID warehouse since Dynamac house in Minshia considered to be no longer safe since April 11 shooting incident by house and American Rec Site.

All PPD paperwork for samples clearances completed at customs.

51) 4/21/88 Purchase of extra coolers for shipping out samples made locally. Airport customs clearance arranged to have Munir and Brown clear samples to airplane side of customs to meet plane on tarmac.

52) 4/22/88 Full information on packing and expediting instructions for sending samples out received from Dynamac Home Office (see annex 7). Stancioff leaves DC for London to arrange for dry ice shipment in and turnaround to Miami. Confirms maximum of 200kg of dry ice shippable to pack in 20 out-going coolers.

53) 4/25/88 Due to inability to communicate directly with Stancioff in London over weekend because of teles and telephone cuts, the dry ice mission was called off by Stancioff. By the time Brown could get out frenzy of messages confirming readiness in Khartoum, shipment from London end had been called off (including phone call to London).

On same day Brown determines that there is in fact dry ice manufacturer Khartoum who is accustomed to making small quantities of dry ice with considerable advance notice, not several hundred kilos in one shot. This is in snow form. The manufacturer suggest that this snow with a coating of liquid nitrogen would guarantee 48 hours of cold shipment.

Negotiators made with local dry ice manufacturer (CO2 company which is a bottled CO2 vender for local soft drink manufacturers) to produce what at first was concluded to be 230 kg of dry ice at 10 ls/kilo.

54) 4/26/88 Dry ice maker said that due to the fact that they had no experience in producing such a quantity of dry ice in one shot, and especially during Ramadan when worker productivity is low, and that the current rigging of their production at seven kilos per 20 minutes would require perhaps over nine hours to produce the desired 230 kgs, a new production process would be required. After testing for one hour the manufacturer found that in fact he could produce over 400 kilos of dry ice at 15Ls/kilo. The dry ice snow was densely packed giving us double the ice that we would have obtained with an in shipment, assuring total protection to London, with probable protection through to Miami.

The addition of liquid nitrogen as a glaze was ruled out upon visit to the nitrogen manufacturer who assured that the locally made coolers would all crack under the -170C load.

55) 4/28/88 Samples left Khartoum at 4:30H. Central Trading Estates in England and Dynamac Home office in conjunction with University of Miami School of Medicine, then responsible for expediting shipment's arrival. USAID warehouse cleaned out and all materials turned over to PPD. PPD staff paid per diems and incentives.

A withdrawal from BCCI bank account made (37, 617 LS) to pay for outstanding local debts while arrival of final 34,420 LS cashed through USAID was awaited.

56) 4/30/88 Attention turned to shipping out dead insects in sticky traps along with spray cards and scientific literature. Response to Southerland queries concerning chemical company representatives sent out.

Reconciliation with house landlord regarding final payments for electricity and water bills made.

57) 5/2/88 Sticky trap shipment taken into British Airways after all quarantine clearance paperwork is submitted by PPD.

Samples reportedly still in Miami airport because of U of Miami lab did not have small mammal permit. All intact however.

Birds and mammals would probably have to be separated out and special permit obtained later.

Possibility noted by Lou Borghi that original residue analysis cost bid from USD 69,000 was for 300 samples. Addition of 100 more samples will raise cost to 93,000 including 53 bird samples for cholinesterase analysis. Stancioff livid.

58) 5/4/88 Sticky traps and other Dynamac material leave for London and Washington, DC.

Jeff Evans notifies Dynamac/Khartoum that pesticide inventory turned over to PPD by Paul Bernard in Tokar should have included the following:

100 liters Ficam
200 liters Karate
50 liters Benitrothion
250 liters Dursban
80 liters Carbaryl

All samples except mammals cleared.

Same extraction used by Dr. Munir for sample analysis in previous residue analysis study will work for the pesticides tested here - KA, BE, CA. Cleanup and derivitization of electron capture analysis will be needed.

Final bank transfer to local vendors with foreign exchange accounts made.

Meeting with Stancioff, Brown, and USAID Project Officer Sharon Fee, ADO Gary Bayer, and Natural Resources Expert Tahir Qadir, and Agronomist George Ghobrial. Milestones accomplishments, acknowledgements, and problems presented (see annex 9).

Discussion focussed particularly on (1) reasons for not doing the efficacy work (2) usefulness of the study given that efficacy work was not done (3) the difficulty in getting people off plots prior to spraying (4) the early difficulties and logistical difficulties overall (5) airport exoneration problems created by PPD not getting prior approval from Attorney General for agreement they signed with Dynamac with the Government of Sudan.

59) 5/5/88 Report received from PPD/Tokar that the following chemicals were turned over at EOP:

Carbaryl	ULV	81 liters
Dursban	ULV	160 liters
Solvesso	ULV	40 liters
Fenitrothion	ULV	50 liters
Karate	ULV	280 liters
Bendiocarb	ULV	100 liters

Stancioff critical of the turnover process in that (a) AID had wanted care to be taken in turning the Pesticides over to assure they could be used for future testing, however modest the program and (b) in Mali, precedent had been set to cutting empty barrels and burying them to obviate any misuse of empty containers. Also, strict accounting of remaining pesticides was made.

60) 5/6/88 Michael Brown departs Khartoum after completing above report. Final financial statements being prepared, final vendors being paid.

61) 5/7/88 Account can not be closed because of outstanding checks (2 USAID, 1 GOS). Report by Stancioff on Minshia incident prepared at request of Mission Director. Reports and copies of inventories being prepared for delivery to USAID.

62) 5/8/88 Office files prepared for shipment to U.S., given to transit agent. All materials (office) turned over to PPD Dr. Munir.

63) 5/9/88 Stancioff delivers reports to USAID, PPD, and takes leave of Khartoum.

64) Unfinished business includes arrival and delivery of lab materials for Wad Medani. PPD fully responsible for customs.

NOTES OF OPERATION OF SPRAY SYSTEM ON CESSNA AGTRUCK ST-AJZ

1.0 Calibration

Before use, the spray system must be calibrated for the chemical to be sprayed. The calibration is divided into two separate parts; setting the correct chemical application rate and setting the droplet size. Unlike a conventional spray nozzle, these are largely independent and are adjust separately.

1.1 Setting Chemical Application Rate

The required chemical flow rate from the aircraft is given by

$$\text{FLOW (l/min)} = \frac{\text{SWATH (m)} \times \text{SPEED (Km/hr)} \times \text{APPEN RATE (l/HA)}}{600}$$

Where:

SWATH = Distance between successive spray runs of the aircraft (lane separation), not maximum effective swath width.

SPEED = Groundspeed of aircraft (typically 105 mph (169 Km/hr) for Cessna Agtruck).

The flow is controlled by setting of the Variable Restrictor Units (VRUs) on the atomisers and by the system (boom) pressure. The VRUs must be adjusted on the ground for the approximate flow rate and the exact flow rate set in flight by adjusting the boom pressure.

The attached graph shows anticipated flow rate against pressure for VRU settings #3 and #5. This graph should be used to decided which VRU setting is appropriate for the flow rate to be used.

Final adjustment of output rate is made by the pilot in flight with reference to the Application Monitor (see later).

IMPORTANT: The relationship between chemical flow rate and pressure will vary according to the viscosity of the chemical being used. Because of this, the attached graph must be used as a guide only. The Application Monitor must always be used for the final adjustment.

1.2 Setting Droplet Size

The Volume Median Diameter (VMD) of the spray droplets produced by each atomiser with a given chemical is determined by the rotational speed (RPM) of the atomiser. The RMP is in turm determined by the angle of the fan blades driving the atomiser.

The angle of the fan blades must be set on the ground to ensure the correct rotational speed. This speed should be checked by the pilot in flight using the RPM function of the Application Monitor.

The attached graph has been prepared to assist with the setting of the fan blade angle. It is based on flight tests with the aircraft under typical operating conditions (105 mph airspeed, 5 l/min chemical output).

Before setting the fan blades, the required atomiser RPM must be known. This should be based either on chemical manufacturer's recommendations or earlier trials during which droplet size on the target was measured.

To determine the blade angle for each atomiser, refer to the graph and read off the angle for atomisers 1-4. Note that the angles for each unit will differ slightly due to the varying airflow over different parts of the wing.

The atomisers are numbered 1-4 counting from the left-hand outboard unit to the right-hand outboard unit.

Having determined the blade angle for each atomiser, adjust the blades as follows:

i) Slacken the three clamp ring securing bolts with a 3/8" wrench.
ii) Adjust all three blades to the same angle as shown in the diagram below.
iii) Re-tighten the three bolts just sufficiently to trap the fan blades. DO NOT OVERTIGHTEN THE CLAMP RING BOLTS.

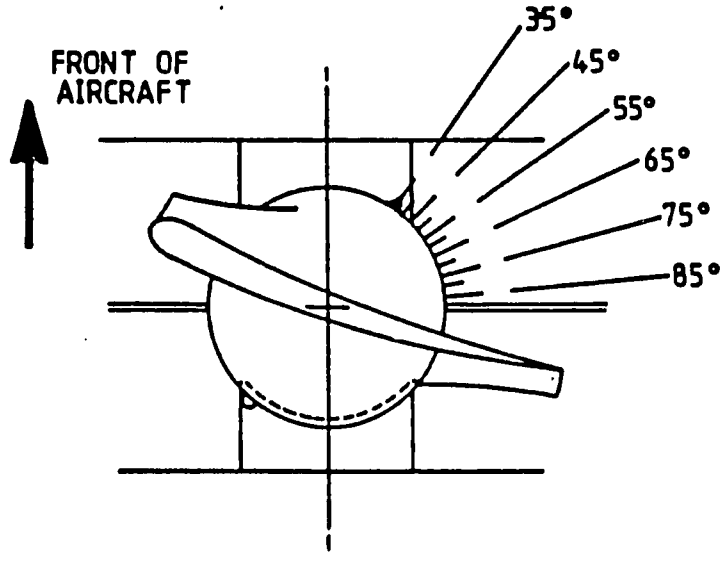

ADJUSTMENT OF FAN BLADES ON AU5000 ATOMISER

Note: If atomiser is fitted with new type EX1772/2 fan blades the setting is made with reference to the extreme anti-clockwise pip on the blade.

2.0 Pre-flight checks on Spray System:

i) Check atomisers for damage and contamination.
ii) Check condition of all atomiser bearings.
iii) Check for leaks from diaphragm check valves (possible chemical damage to diaphragms).
iv) Check VRU setting on each atomiser.
v) Check blade angles on all atomisers.
vi) Check condition of all hoses, booms and boom supports.

3.0 Setting-up of Application Monitor

i) Start aircraft engine.

ii) Check that display reads:

USE LASR SET-UP? (YES/NO)

If the display does not show this, switch the master switch off and on again to reset the Application Monitor.

iii) If the swath width, speed and turbine calibration have not changed since the unit was last used, respond by pressing the YES button. The unit is now ready for use.

If a parameter has been changed, press the NO button and enter the new data as prompted on the display.

Note the TURBINE #1 should be selected for flows above 5.5 l/min and TURBINE #2 should be selected for flows below this figure.

4.0 In Flight

i) Press the FLOW button on the Application monitor if output rate is being expressed as chemical flow; otherwise, press the VOL/AR button to display output in terms of application rate in litres/Ha.

ii) When in the spraying area, start the chemical pump, open the spray valve and adjust the pressure until the Application Monitor shows the correct flow or application rate. Note the boom pressure required to achieve this output.

iii) Open and close the spray valve in the normal way when making each spray run.

iv) Towards the beginning of the first spray run, press the RPM button on the Application Monitor and select atomiser #1. Check that its speed corresponds to the required RPM. Select atomisers #2, #3, and #4 and check their speeds in the same way.

Press the RESET button on the Application Monitor to leave RPM mode and select FLOW and VOL/AR again.

v) Use the VOL A and VOL B functions to measure the total amount of chemical used if required. Note that VOL A can be reset by pressing the VOL A button and then RESET. VOL B cannot be reset in flight.

vi) Whilst spraying, note the reading of flow or application rate on the Application Monitor and the boom pressure. If the flow or application rate should start to fluctuate or become zero, it is possible that the flowmeter turbine could have become blocked. If this is the case, the output can be maintained by reference to the boom pressure noted in (ii) above.

IMPORTANT: If a large change in pressure or spray valve opening is required in flight, this probably indicates a major blockage (possibly in the filter) and the spray run should be aborted.

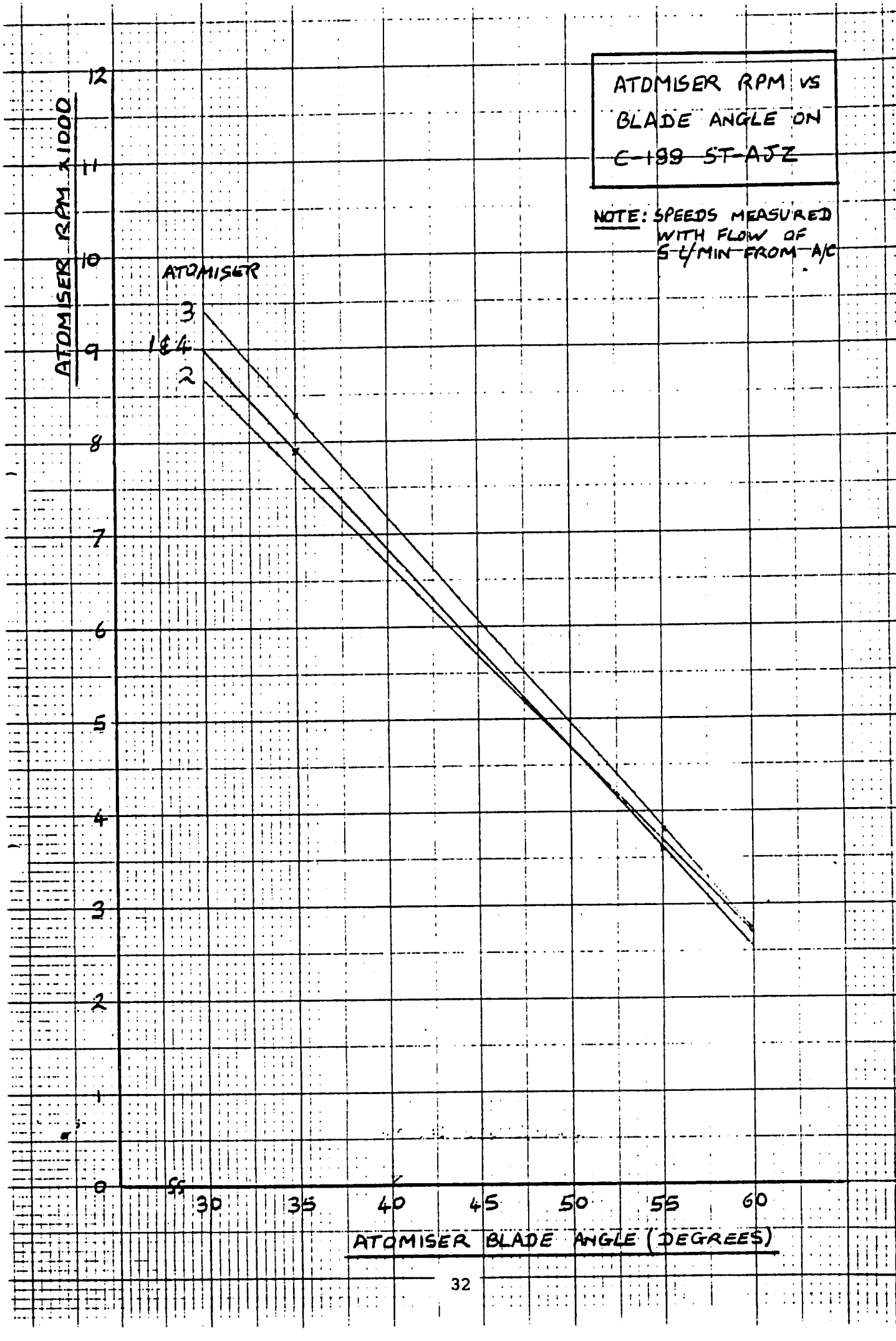
ATOMISER RPM VS
BLADE ANGLE ON
C-188 ST-ADZ
NOTE: SPEEDS MEASURED
WITH FLOW OF
5 L/MIN FROM A/C
ATOMISER
3
1&4
2
ATOMISER RPM X1000
12
11
10
9
8
7
6
5
4
3
2
1
0
30
35
40
45
50
55
60
ATOMISER BLADE ANGLE (DEGREES)

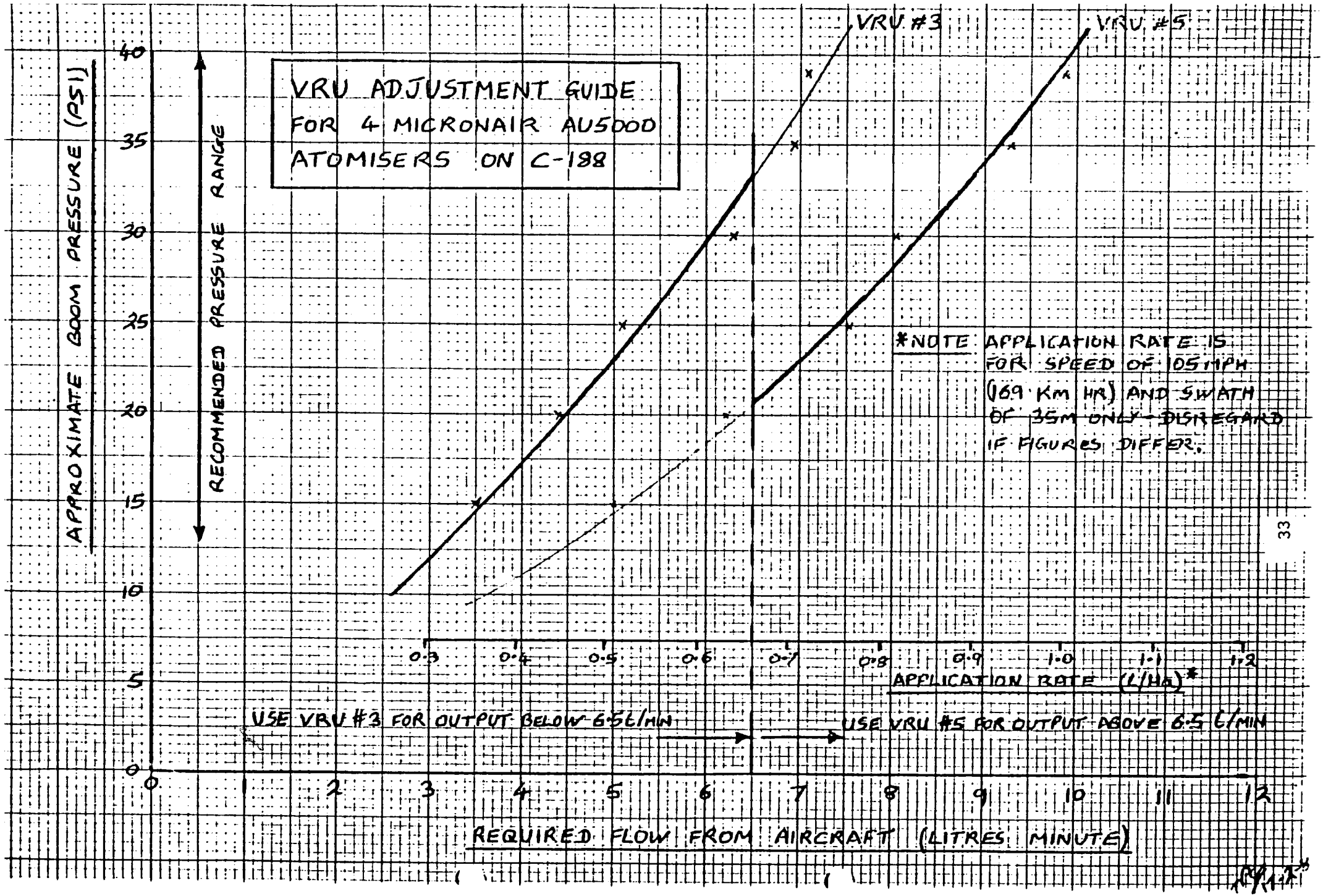
VRU ADJUSTMENT GUIDE
FOR 4 MICRONAIR AU5000
ATOMISERS ON C-188
VRU #3
VRU #5
APPROXIMATE BOOM PRESSURE (PSI)
RECOMMENDED PRESSURE RANGE
40
35
30
25
20
15
10
5
0
0.3
0.4
0.5
0.6
0.7
0.8
0.9
1.0
1.1
1.2
APPLICATION RATE (L/HA)*
*NOTE APPLICATION RATE IS FOR SPEED OF 105MPH (169 KM HR) AND SWATH OF 35M ONLY - DISREGARD IF FIGURES DIFFER.
USE VRU #3 FOR OUTPUT BELOW 6.5L/MIN
USE VRU #5 FOR OUTPUT ABOVE 6.5 L/MIN
0
2
3
4
5
6
7
8
9
10
11
12
REQUIRED FLOW FROM AIRCRAFT (LITRES MINUTE)

5.0 After Completion of Flights

The entire spray system should be washed out by pumping a suitable solvent through the boom and atomisers. Diesel would probably be a suitable solvent for most ULV chemicals. Use water with caution as it can form a gel with some formulations.

Pay particular attention to the atomisers. Ensure that there is no chemical build-up on the gauze screens or fan blades. If conditions are likely to be dusty and windy, it is suggested that all atomisers are wrapped in cloth whilst the aircraft is let on the ground for a significant time.

MICRONAIR AU5000 INSTALLATION ON CESSNA AGTRUCK ST-AJZ

1.0 Atomisers

The aircraft was fitted with four Micronair AU5000 Atomisers. The atomisers were mounted on a streamlined boom fitted in place of the standard round spray boom used for nozzels. The inboard atomiser on each side was approximately 1m from the fuselage and the outboard atomisers were each approximately 1.7m from the wing tip. This configuration was adapted from the original six atomiser installation which had been used for agricultural spraying. Four atomisers were chosen instead of six to simplify the task of calibrating the aircraft at very low flow rates and to use the same configuration as earlier trials in Mali.

All atomisers were fitted with standard fan blades and 20 mesh gauze screens.

2.0 Variable Restrictor Units

Each atomiser was fitted with a Variable Restrictor Unit (VRU) to regulate the chemical flow from the boom to the atomiser. All VRUs were fitted with the standard odd-numbered (0) restrictor plates. These have holes numbered 1, 3, 5, ... 13, with the higher numbered holes providing higher flow rates at a given pressure.

3.0 Diaphragm Check Valves

Each atomiser was fitted with a Diaphragm Check Valve to shut off the chemical supply when not spraying and to prevent dripping from the atomiser.

The check valves were initially fitted with Viton diaphragms. These are resistant to the majority of agricultural chemicals but may be attacked by the solvents used in a few ULV formulations. Alternative PTFE (Teflon) diaphragms were provided for use in the event of problems with the Viton type.

4.0 Application Monitor

The aircraft was fitted with a Micronair Application Monitor to measure the output of chemical from the spray system and to check the rotational speed of each atomiser.

4.1 Flowmeter Calibration

The flowmeter turbine which feeds flow information to the Application Monitor was tested at both a typical flow rate (7 l/min) and at a rate at the bottom of its operating range (4.5 l/min).

The turbine calibration figures were entered into the Application Monitor as follows:

Normal flow range (5.5 - 40 l/min)	TURBINE 1	1394 pulses/l
Low flow range (4.0 - 5.5 l/min)	TURBINE 2	1464 pulses/l

The Application monitor should give accurate readings provided that TURB #1 is selected for flows above about 5.5 l/min and TURB #2 is selected for lower flows.

Full details of the use and calibration of the Application Monitor will be found in the relevant handbook.

Abridged operating instructions are given in the Spray System Operation instructions.

REPORT OF CICP/DYNAMAC EFFICACY TEAM
SUDAN PESTICIDE TESTING PROJECT

INTRODUCTION

Until 5 March it was not clear whether or not the team would be able to find a suitable area in which to work. At a meeting held in the main camp at Tokar on 5 March, reports were received from the locust section of the Plant Protection Directorate (PPD) indicating considerable hopper populations to the North of Salala. A figure of 26,000 hopper bands appeared in the report which made the infestation sound really interesting. PPD was immediately requested to leave one major infestation uncontrolled in order that the efficacy team could conduct its trials in an area not previously contaminated by any insecticide. It was therefore decided that the team should move to the area as soon as suitable arrangements could be made.

On 8 March the team moved to Port Sudan, on 9 and 10 March the team moved from Port Sudan to a camp approximately 24 km north of Salala. On 11 March the team was shown the area in the Wadi Diib which had been reserved for the efficacy trials. The site was examined carefully, and was visited again on 13 March when further observations were made and photographs were taken. The following notes describe the site and give the background to the decision not to proceed with the trials.

THE SITE

The infestation of Desert Locust hoppers was situated in a belt of Sorghum cultivations lying along the foot of a long low rocky ridge. The cultivations were approximately 3 km in length and varied in width from less than 50 m to 400 m. The Sorghum crop was fully mature and a small amount of harvesting had already been undertaken.

The crop was best developed close to the rocky ridge where more run-off water had accumulated before the seeds were sown. The whole area was drying out rapidly, particularly in the sections furtherest from the ridge.

In the area where the crop was at its best there was also the best development of weeds between the sorghum plants, and locally the weeds provided almost 100% ground cover to a depth of 20-30cms.

In the section of the cultivated area where the width was less than 50 m the vegetation on the side away from the rocky ridge consisted of dense salt bush (Suaeda sp.) to more than 2 m in height.

THE LOCUST POPULATION

The locust population in the sorghum cultivations comprised all five hopper instars, a few fledgings and the occasional adult of the parent generation. The commonest instar appeared to be IV. The distribution of the instars was such that one did not find all the instars in any one area but a patch of III instars might be followed by a patch of IV and then a dense group of II. The greatest numbers were found in the 50 m closest to the rocky ridge. This was the area where there was also the greatest quantity of weeds which were the only green vegetation. The hoppers were not generally grouped into well defined band but were somewhat dispersed. The dense weed

cover made hopper band cohesion difficult and an examination of the hopper colour patterns showed a decreasing amount of black in the later instars indicating disassociation as would be expected in the dense ground vegetation.

THE PROBLEMS OF SPRAYING

1. It is not acceptable to spray a fully mature standing crop in which harvesting has already begun.

2. Owing to the height of the sorghum crop, up to 2.5 m, and the locally dense ground cover of weeds very little spray would reach either the hoppers or the ground as is required from contract insecticide such as those to be tested. The pick-up of spray droplets by the vegetation would be high even in the lightest breeze, but winds speeds of 8 m.p.h. (3.3 m/sec) were recorded at 5:30 H on 12 March and on following day winds were considerably stronger.

3. In order to divide the site into the required number of blocks for the different treatments and controls it would have been necessary to the long narrow cultivated area at right angles to the rocky ridge. A spray plane flying either towards or away from the ridge would would have been unable to spray close to the ridge where most of the hoppers were situated.

4. Owing to the fact that a small number of fledglings were observed on the first day (11 March) and the majority of the population in the IV instar would be expected to fledge within 7-10 days, fledging would, after a few days, be followed by dispersal. The time available from the various insecticide treatments would therefore, be very short. In fact the spraying programme at Tokar was not yet complete and the plane could not have been available for at least a week which would have been too late.

THE PROBLEMS OF POPULATION ASSESSMENT

1. Most of the hoppers occurred in the area where there was the densest weed cover. When hoppers on open ground were approached they immediately started hopping intothe dense weeds where they were mostly invisible. The number of hoppers that could be counted by an observer in these conditions would only be a small population of the total. This would be particularly true in the case of the early instars which are smaller and inconspicuously coloured. The dense ground cover and the hopper behavior would together make accurate density estimates impossible.

2. The hopper population was not evenly distributed throughout the sorghum belt; additionally the age distribution of the hoppers was even more irregular. As natural mortality in Desert Locust hopper populations is always high, it would have been necessary to assess it and allow for it when estimating the numbers killed by the various treatments. With the uneven age distribution observed it would have been rash to infer that the natural mortality observed in control blocks was the same as that in treated blocks, even if they were adjacent.

RECOMMENDATIONS FOR FUTURE STUDIES

1. Timing

   a) The likelihood of suitable breeding populations occurring in the Red Sea winter breeding area can only be assessed towards the end of the summer campaign when it became clear how many swarms have been produced. For example towards the end of 1986 large numbers of swarms were reported and a large scale Red Sea campaign was smaller than that in 1986 and consequently the 87/88 winter campaign was much smaller than the 86/87 campaign.

   b) In order to find large areas suitable for various treatments in conditions where population assessment has a reasonable level of accuracy it is essential that the trials be conducted in the open plains where vegetation is sparse and low. These conditions are only likely to occur early in the rainy season.

      The efficacy team must therefore be in the field ready to start work not later than mid-January.

   c) As first and second instar hoppers are so easy to kill it is recommended that the trials should be conducted on III to V instar populations. The later instar are not only larger but more conspicuously coloured and therefore easier to count, which would tend to produce more accurate population estimates.

   d) In order to obviate some of the difficulties of comparing different treatments it is highly desirable that the age of the hoppers in all blocks should be approximately the same. Synchrony of hatching is a characteristic of highly gregarious populations and is therefore more likely to occur in the winter breeding area following larger numbers of swarms escaping from the preceding summer breeding.

2. Population Assessment Techniques

   The conventional randomised block design used in grasshopper trials may be appropriate for locust work when the hopper bands are very large; i.e. the same size or larger than the experimental blocks. However, this situation is by no means the norm and the efficacy team must be prepared to assess a population comprising a large number of highly mobile small bands often separated by 50 - 100 m. Under these circumstances it might be necessary to follow the fate of individual bands. Such decisions, however, can not be taken in advance and the team must be prepared to develop (and adapt?) sampling techniques appropriate to the conditions they find in the field.

3. The Use of Unexpected Insecticide Stocks

   Small quantities of 7 insecticides will remain after the completion of the environmental assessment conducted at Tokar owing to the cancellation of the efficacy trials.

It is recommended that these insecticide stocks should be used by PPD, under the supervision of the most qualified staff available, to conduct small scale field trials using back-pack ULV equipment.

DESERT LOCUST RESEARCH CONTROL PROJECT
USAID/DYNAMAC/CICP
REPUBLIC OF SUDAN
1988
T. K. SCHWARTZ

This document will report on the efficacy portion of the Desert Locust Research Control Project conducted in the Republic of Sudan in 1988. The report will outline why the efficacy portion of the project was not conducted and will give the writers opinion on ways that future projects may be improved.

PROJECT ACTIVITIES

The writer and the majority of the CICP efficacy team arrived in the Sudan on February 23. Upon arrival in the Sudan, the team proceeded to the Tokar camp. It was unclear at that time as to the locust situation. We did however know that there were no locust in the Tokar area. At this point, the Plant Protection Dept. (PPD) of the Sudanese Ministry of Agriculture was surveying the Red Sea Coast area for locust infestations. On March 5, the PPD team in Salala reported infestations in Wadi Oko and Wadi Diib. The report stated that there were approx. 26,000 bands in an area north of Salala. At this time, the team requested that one of the major infestations be left untreated to be utilized in the efficacy trial. The team, lead

by the writer, and consisting of Hemming, Bashir, Kepner, Munim and Nezam arrived in Salala on March 10. The following day, the local PPD personnel, lead by Omar Tangari presented the reserved site to the team.

The infestation area was limited exclusively to belts of cultivated sorghum. This sorghum was fully mature with harvest in progress. Additional surveys of the area and consultations with other local PPD experts, revealed that all of the locust were confined to similar areas.

In addition to this situation, the following factors were observed and noted by the team:

1.) The sorghum was approx. 2 to 3 meters tall, with weeds 20 to 30 cm deep covering nearly all the area.

2.) Locust were primarily 4th instar with scattered sightings of 3rd and 5th instars.

3.) The location and terrain of the area was totally unsuitable for experimental aerial block application.

4.) Consistant winds in excess of 10 mph would preclude accurate aerial treatments in a restricted area.

Considering the above stated factors, the team made the following conclusions:

1.) Sorghum under harvest could not be sprayed.

2.) The dense cover of both sorghum and weeds

made ULV application unfeasible, as the applied material would not reach the target.

3.) The distribution, instar and color patterns of the locust indicated dissassociation, as would be expected in this dense ground cover situation.

4.) The particular site topography and infestation patterns, precluded a spray plane from flying the area in an experimental block design.

5.) The majority of the locust were in the 4th instar, fledging followed by dispersal would be expected within 10 days. Thus, available time was too short for treatments and evaluations. This problem was compounded by the fact that the Tokar spray program was still in progress and was being delayed due to aircraft difficulties.

6.) Reliable scientific data would be impossible to obtain considering the dense foliage and the uneven population and age distribution of the locust.

This information was relayed to Mark Southerland by myself. He inturn relayed the message to Khartoum and Washington DC, and the decision was made not to conduct the efficacy trial.

RECOMMENDATIONS

The following are recommendations and suggestions for future studies. These are comments reflecting my thoughts and those of the other efficacy team members:

1.) Trial protocol must be flexible, as to accommodate the variety of situations which may be encountered.

2.) To obtain reliable data, trials must be conducted in open sparsley vegetated areas. These conditions are only likely at the onset of the rainy season. Therefore, on the Red Sea coast, the efficacy team must be in place by mid-January at the latest. Projections for infestations in this area must be made at the end of the summer campaign once the swarm numbers have been clarified. This however is not a guarantee spring populations will be present, as they are also dependent on rainfall.

3.) Given the variability of early instar natural mortality, trials should evaluate 3rd to 5th instars to assure the most accurate population estimates and control effectiveness.

4.) Conventional randomized block design trials

as are used in grasshopper control research may be useable if bands are very large, that is larger than the experimental block size. However, this is not normal for locust. Therefore, the team must be ready to assess populations which are comprised of large numbers of small bands. In this situation, individual bands may require following. Again stressing the fact that the team must be prepared to adjust sampling techniques to existing conditions.

TRIP REPORT
Republic of Sudan
Thomas K. Schwartz

A. Summary

The purpose of this project was to evaluate pesticides for the control of desert locust and to evaluate the enviromental effects of those pesticides in relation to non-target and beneficial organisms inhabiting the treatment areas. This project, conducted in the Republic of Sudan, is a series of ongoing projects in Northern Africa. Results of these trials will enable local government agencies and cooperative donor agencies, such as USAID, to recommend and utilize the pesticides that are most efficacious and least detrimental to the surrounding enviroment. Therefore, allowing effective and safe eontrol programs when locust outbreaks require treatment to protect grazing and cropland.

As stated above, the project was two fold, efficacy and enviromental impact. Due to circumstances which will be elaborated on in section B, the efficacy portion of the project was not conducted. The enviromental impact study was completed successfully.

The writers involvement in the project spanned from February 22 through April 9, 1988.

B. Project Activities

1. The writers assignment was to be the leader of the pesticide efficacy team. This involved evaluation of locust infested areas and designing and conducting a scientific trial to evaluate the efficacy of the selected pesticides. These evaluations

and decisions were made in cooperation with the entire efficacy team, which consisted of CICP, Dynamac and Sudanese experts.

2. During the trip, the writed visited the following sites and organizations:

Dynamac Office - Khartoum
Dynamac Camp - Tokar
Dynamac Camp - Salala
Plant Protection Dept. - Salala
Plant Protection Dept. - Suakin
USAID Office - Khartoum

3. Upon the writers arrival in the Sudan, the Dynamac camp was set up in the Tokar Delta. This area was suitable for the enviromental impact study, but due to the absence of locust, unsuitable for the efficacy trial. Radio communications with Sudanese Plant Protection Dept. (PPD) personnel indicated an infestation of locust in the northern part of the country, near Salala. After consultation between CICP, Dynamac and PPD experts, the decision was made for the efficacy team to travel to Salala, approx. two days north fo the Tokar location.

Upon arrival in the Salala area, a survey was launched to locate a suitable trial location. Surveys and consultations with local PPD experts revealed that the locust populations were confined to mature sorghum fields which were being harvested. This factor, along with others, prohibited conducting the efficacy trial. A detailed explanation of the situation can be found in a separate project report.

At this time, the efficacy team returned to Tokar and with the exception of myself, were released and returned home. I, as project leader for CICP, remained in Tokar to assist in the application of the remaining pesticides in the enviromental impact study.

On April 2, the writer was diagnosed with Malaria, and due to medication complications returned to Khartoum for treatment and then proceeded to the US.

C. Follow-up

It is the writers opinion that the delays in the project startup ultimately resulted in the inability to conduct the efficacy trial. Conversations with local PPD personnel indicated that the locust were in areas, grass wadi's, in January. These areas are ideal for conducting efficacy trials. By early March, when the efficacy team arrived in Salala, the wadi's were dried up, forcing the locust into the sorghum. Due to the extreme difficulty in communications in the Sudan, I feel it is imperative that the commitment be made early and that at least, the efficacy team leader proceed to country as early as possible.

D. Contacts

Dynamac

Andrew Stancioff, International Director
Mark Southerland, Scientific Leader
Mike Brown, Logistics Mgr.
Paul Bernard, Camp Mgr.
Jeff Evans, Staff Scientist
Dave Bettendorf, Stagg Scientist
Al Giraldi, Staff Scientist

CICP

Wes Yates, Application Spec.
Chris Hemming, Locust Spec.
Rod Kepner, Beneficial Spec.

Plant Protection Dept.

Dr. Munir Gabra Butrous
P.O. Box 14
Plant Protection Dept.
Khartoum North, Sudan

Mr. Omar Tingari
Plant Protection Dept.
Suakin, Sudan

Universtiy of Khartoum

Dr. Syaad Bashir
Dept. of Entomology
University of Khartoum
Khartoum, Sudan

USAID

Ms. Sharon Fee
USAID
Kuwait Towers
Khartoum Sudan

UNIVERSITY OF CALIFORNIA, DAVIS

BERKELEY • DAVIS • IRVINE • LOS ANGELES • RIVERSIDE • SAN DIEGO • SAN FRANCISCO SANTA BARBARA • SANTA CRUZ

DEPARTMENT OF AGRICULTURAL ENGINEERING DAVIS, CALIFORNIA 95616

April 13, 1988

Dr. Mark Southerland
Dynamac Corporation
The Dynamac Building
11140 Rockville Pike
Rockville, Maryland 20852

Dear Mark:

Enclosed is a draft copy of my report on the project findings and recommendations. I would appreciate it if you would please review it and make any corrections or additions. The one part I need input from you is for one column (plot number) in Table 3. I included this column to make sure the weather data is integrated with your plot data. Please let me know if I can be of further assistance.

I was pleased to hear that you were able to include the additional chemicals in your study. I hope the applications went on without a great deal of problems. Sorry to hear Tom was sick. Hope you and the rest of the crew continued without any health problems. I look forward to hearing from you.

Sincerely,

Wes

Wes E. Yates
Professor

WEY:lb

cc: Dr. George Schaefers
New York Agricultural Experiment Station

Enclosures

Report on Four Chemical Applications for the

Environmental Assessment Studies Near Tokar, Sudan

March 1-23, 1988

W.E. Yates, C.I.C.P. Consultant

A. Aerial Application Equipment

The aircraft used for the applications was a Cessna Ag. Truck with the following specifications:

Wing Span	41 ft. 8 inches
Wing Area	205 sq. ft.
Engine Power	300 B. HP
Gross Weight	4200 lb.
Useful Load	1967 lb.
Hopper Capacity	280 gal.
Fuel Capacity	54 gal.

The aircraft was fitted with an internal mounted centrifugal pump with a variable speed hydraulic drive system and a standard trailing edge boom (Transland Co.). Four Micronair AU5000 mini-atomizers were installed on the trailing edge boom. Two at a distance of ±15 ft. from the centerline and two ±4.7 ft. from the centerline. In addition, the Micronair Application computer system was installed on the aircraft. This system provided a direct readout of the flow rate, and RPM of each atomizer.

The type of aircraft and equipment was basically satisfactory for this study. The condition, back up of spare parts, field maintenance capabilities, and a few additional features could have greatly improved the operation. I will mention some of the problems encountered at this point and will discuss some possible improvements for future programs under the sec-

tion on recommendations.

The spray system was extremely difficult to prime and somewhat erratic in operation. This may have been due to a clogged air bleed line and/or a problem with the hydraulic drive system. Also, the pilot found that at some times it was very difficult to adjust and maintain a constant spray pressure. In any case, better maintenance and field test equipment could improve the operation.

Another example of problems was the failure of the engine to start between handlings on one of the treatments. No spare batteries or jumpers were available at the airport. Thus, it was necessary to find jumpers and a spare battery, back in camp headquarters. On another occasion the mechanic tried to clean the spark plugs without proper equipment and he didn't have any spare spark plugs.

Although the Micronair computer worked satisfactorily, the pilot had some difficulty recording the numbers in flight. Since the pilot could not observe and record the data during the actual low level flights over the plots, it was necessary to fly to a remote area prior to each treatment to record information on the flow rate and RPM of each atomizer. Thus, a portable printer output for the computer would facilitate and enable collection of precise data during the applications.

Another problem area was the communication between the ground crew and the aircraft. It was impossible for the pilot to communicate with the ground crew using the hand-held transceivers available. For future projects it is important that the aircraft have a properly installed radio, antenna, and a helmet with installed headset and noise-cancelling microphone.

B. Micro-Weather Station Equipment

A base weather station was set up near the main camp located about 1/4 mile from the pesticide loading area at the airport. The base weather station included:

1. One 22 ft. mast. It was used to support the sensors used to measure the temperature gradient between 22 ft. and 6 ft. The sensor was a thermocouple mounted in an aspirated radiation shield. The aspiration was provided by a small 12 VDC motor driven fan. A small 12 volt battery was recharged by means of a small solar-cell panel. The temperature was measured with a small hand held instrument, Fluke Model No. 52. The instrument had a digital liquid crystal display of temperatures with an accuracy of $\pm 0.2°F$. The operator could select the measurement of T_1, T_2 or (T_1-T_2). Thus, the system could accurately measure the atmospheric temperature gradient near the surface. Past experience showed the presence of an inversion greatly improved deposition of fine particles while a strong lapse, results in a greater loss of fine particles due to vertical diffusion and dispersion of the fine particles.

2. One 6 ft. mast with a wind vane. A small light weight vane was used to indicate the wind direction. A clear plastic disc with 30° graduations, i.e. N, 30°, 60°, E, etc. was mounted below the vane and the direction noted by an observer.

3. One 6 ft. mast with a sensitive totalizing cup aneomometer, Cassela Model. This instrument had a totalizing indicator that could measure the number of revolutions of the cup. The observer could select any desired time interval to determine the average speed during the selected time interval. A period of 1 minute was used for all measurements during the spray

tests. A calibration chart was used to convert rev/min to MPH. This cup aneomometer was also portable and used to measure wind velocity at the airport during the spray applications.

4. One 6 ft. mast with a sensitive cup aneomometer, Weather Tech International - 0-10 MPH, prototype. This instrument utilized a small generator and had a direct analog meter that was scaled from 0-10 MPH with 1 mph divisions.

5. A battery operated psychrometer, Weathertronics Model 5245, was used to measure the wet bulb and dry bulb temperatures. The instrument consisted of two mercury thermometers, one fitted with a wick which was saturated with distilled water, and a battery operated fan to aspirate air past the two thermometers. The relative humidity was determined from psychrometric charts based on W.B. and D.B. readings.

6. A rain gage was also installed at the base weather station.

C. Pesticide Treatments and Rates for Environmental Impact Studies.

Four pesticides were applied to the environmental assessment plots near Tokar during 3/10 to 3/13. The formulations were all applied (ULV) without dilution. Table 1 lists a summary of the treatments used in the field trials.

Table 1. Pesticides Used in the Tokar-Sudan Environmental Impact Trials in Chronological Order of Application.

Date	Compound	Chemical Class	Tradename	Formulation	L/ha*	g a.i. /ha†
3/10	Chlorpyrifos	Organophosphate	Dursban	450 ULV	0.50	225.
3/11	Fenitrothion	Organophosphate	Sumithion	L50	0.52	260.
3/12	Lambda -Cyhalothrin	Pyrethroid	Karate	4% ULV	0.51	20.4
3/13	Bendiocarb	Carbonate	Ficam	20% ULV	0.62	124.

*Liters/hectare
†Grams Active Ingredient/Hectare

D. Pesticide Handling

All materials were stored in an enclosure with a thatched roof to reduce daytime temperatures. A native watchman stayed in a tent at the storage site. Materials in 20 L containers were hand poured into the aircraft hopper. A rotary hand pump was used to transfer the formulations stored in 55 gallon drums. When possible, the pesticide remaining in the hopper after the application was transferred with the same pump back into the original container. Except for Bendiocarb, the spray system was flushed with diesel oil after each treatment. The system required a minimum of 40 L of material to prime the spray system. Bendiocarb was the last material applied and solvesso was used to flush the system, both before and after the application. There appeared to be some incompatibility with the previous formulation (Lambda-Cyhalothrin). The main in line filter became clogged with large gel-like granules during the flushing process. The filter was cleaned and no further problems appeared. All personnel involved with the loading were supplied with coveralls; waterproof boots, gloves and aprons; face shields and respirators.

The hand-operated rotary pump was satisfactory for transferring the material. Since all loading personnel used protective clothing no direct exposure to workers occurred. However, for future programs the handling hazards could be reduced by the use of a closed loading system. For example, during the hand pouring and during removal of the contaminated hose from the drum there was a potential hazard of exposure of the worker. There are several "closed systems" available that would eliminate the hand pouring and exposure to a contaminated hose. One simple device is a special enclosed probe that can be extended into a 55 gal. container and also one designed for 1-10 gal. containers. These probes could be used with a hand or battery powered system.

E. Preliminary Calibration of Equipment and Application Procedures.

During February, Tim Saunders, Micronair, visited Sudan and made a preliminary calibration and recommended adjustments. The aircraft was located in Kosti, Sudan at that time.

After the aircraft and pilot arrived in Tokar, Tom Schwartz and Jeff Evans conducted some on-site calibration and RPM adjustments. Based upon the concensus of the manufacturer and chemical company representatives, it was agreed to initially calibrate the system based upon:

Flight Height	= 15 ft. (4.6 m)
Swath Spacing	= 115 ft. (35 m)
Airspeed	= 100 mph (161 km/hr)
Desired RPM of Micronair	= 6000 RPM

Spray tests with the VRU set on 3 and pressure at 34 psi indicated the desired flow rate of 4.8 L/min. Two tests were made on the ground by collecting the material from each atomizer for 30 sec. The measured flow rate by the collection method was 4.84 and 4.68 L/min. This verified that the Micronair flow meter provided a satisfactory flow rate measurement and we could use the flow meter for further calibrations. The angle of the Micronair blades were adjusted to the recommended angles and test flown to check the RPM. The RPM ranged from 5224 to 5770 for the 4 units. All angles were adjusted to increase the speed. Results produced a range of speed from 6260 to 6560 RPM. Thus, the blades were readjusted to about 1/2 of the previous adjustment.

On March 7, after I arrived, we conducted further calibration trials. Flow rates appeared to drop and we later located some partial reduction in flow at one nozzle. We cleaned the VRU unit and flushed the system with

diesel oil. Adjustments were again established to obtain a flow rate of 4.7 L/min. The final adjustments on the blade angle for the four atomizers gave a range of 5660 to 6470 RPM which was considered satisfactory for the applications.

The accuracy in the application rate is directly dependent on the accuracy in swath spacing. Guidance for each swath was provided by use of two vehicles with flags located on each side of the spray block. Rubber rope counters were attached to the front wheel of each vehicle and calibrated to measure the 35 m swath spacing. A total of four vehicles were used to enable the pilot to proceed from one plot to the next one without waiting for the flaggers.

It was anticipated that one material would be applied to the three replicate plots during one day.

The accuracy of the application also depends on the ground speed. If the spray flights are made in one direction and the next reversed, the airspeed of the aircraft would nearly approximate the average ground speed. To check the accuracy of the indicated airspeed on the aircraft, several flight tests were conducted. A marked length of 500 m was measured along the runway. One observer was stationed with a hand-held radio at each marker and the elapsed time observed with a stop watch. An average time for four passes yielded a calculated speed of 96 mph compared to the pilots reported indicated speed of 100 mph. It was assumed that within the accuracy of the measurements the indicated airspeed was correct. Thus, we used the airspeed of 100 mph for the calibration calculations.

A mock spray test was conducted the day before the actual experimental plot applications. The mock area was near the airport and was a block

250 x 250 m. Diesel oil was used and applied at the calibrated rate of 0.5 L/ha. Two of the guidance vehicles were used to mark the 35 m swath spacing. Forty oil sensitive spray cards were used to measure the spray deposition in the spray block as well as the downwind drift. The cards were placed at 11 m spacing along a N-S line through the center of the block and extending 185 m downwind of the block. The prevailing wind was 4-8 mph from the North and the aircraft passes were East and West. Observers on the ground noticed a delay in spray systems and instructed the pilot to start the spray system before the edge of the field and also stop slightly before reaching the opposite edge of the field. Because of the large size of the actual experimental plots (1000 x 1000 m), it was felt that a small error in starting and stopping of the spray system would not affect the deposition in the actual areas sampled.

The spray cards showed deposition in the plot area as well as some drift and deposition as far downwind as sampled (185 m beyond plot border).

F. Aerial Applications to the Environmental Assessment Plots.

a. Calibration. The spray application was calibrated for each material and was based on the following relationship:

$$L/ha = \frac{L/min}{ha/min} \qquad \text{Eq. 1}$$

The constant factors for all applications were obtained from the pre-calibration trials and are as follows:

Swath Spacing = 35 m

Airspeed = 161 km/hr (100 mph)

Thus, $$ha/min = (35\ m)\left(\frac{161\ km}{hr}\right)\left(\frac{1000\ m}{km}\right)\left(\frac{ha}{10000\ m^2}\right)\left(\frac{hr}{60\ min}\right) = 9.4\ \frac{ha}{min}$$

From Eq. 1, $$L/min = \left(\frac{ha}{min}\right)\left(\frac{L}{ha}\right)$$

$$L/min = (9.4)(\frac{L}{ha})$$

The desired application rates (L/ha) were taken from the recommendations of the chemical companies. For example, the recommended application rate for Chlorpyrifos was 0.5 L/ha.

Thus, the desired flow rate was:

$$L/min = (9.4(0.5) = 4.7\ L/min.$$

The general application procedure was to load sufficient material in the hopper to cover the proposed three replicate plots. The pilot was instructed to fly to a remote area (away from the plots) and adjust the hydraulic pump drive system to obtain the desired flowrate, record the value, and then record the RPM of each atomizer. During the mock trial various signals between the ground crew and pilot were discussed and included basic signals to stop spraying, continue spraying and return to airport. In addition, the pilot was given a transceiver to hopefully enable him to hear any verbal instructions from the flaggers even if there was too much noise in the cockpit for the pilot to talk to the ground crew. However, considerable difficulty was encountered due to poor communications. First, the radios were found to be entirely unreliable for any communication to either the pilot or between the ground crew. Second, the prearranged ground crew signals were not adequate for the various unpredictable events that occurred. In addition, since there was no communication ability between the airport and field, there was considerable difficulty in determining when, where and if further spraying was to continue in the field if the original plans needed to be changed. In many cases it was a one-hour drive from the field to the airport. Thus, for future spray programs, it appears vital that improved radio capability be obtained. As mentioned

under the previous section (aircraft equipment) the aircraft should have a properly installed radio transceiver, antenna, helmet with headset and noise-cancelling microphone. In addition, each ground crew should have a transceiver that is capable of providing reliable communication over a distance of a few miles. Table 2 shows the tabulation of the application data for the four materials applied.

Table 2. Aerial Application Parameters for Each Material.

Swath Spacing = 35 m Manifold Pressure = 21"
Height = 2 to 5 m Engine Speed = 2300 RPM
Airspeed = 100 mph

Date	Material	Micronair* RPM_1	RPM_2	RPM_3	RPM_4	VRU Setting	Spray Pres. psi	Flow Rate L/min	Application Rate L/ha
3/10	Chlorpyrifos	5860	5450	6050	5810	3	40	4.7	0.50
3/11	Fenitrothion	5910	5530	6020	5810	3	59	4.9	0.52
3/12	Lambda-Cyhalothrin	6100	5500	6320	6590	3	30	4.8	0.51
3/13	Bendiocarb	5920	5940	6520	5840	5	26	5.8	0.62

*Subscripts on the RPM refer to the location of the Micronair; the units were numbered from left to right as observed by the pilot.

b. Micro-weather. Weather records were collected for several days prior to the aerial applications. Data were taken from daylight to dark. The temperature gradient data from the tower revealed there were no local inversions present, even during early morning hours. Thus, the transport and diffusion of the fine spray particles were primarily dependent on the wind velocity. During the entire spray period we observed a continuous prevailing wind from the North with the lowest velocity at daylight and the highest velocity with most turbulent conditions in the mid-afternoon 1400-1500 hr. Table 3 lists the date and application period (time of takeoff and landing of aircraft) for the application of each material to the

three replicate plots. The application sequence and plot number are also included. In addition, Table 3 summarizes the weather conditions before, during, and after the spray applications for each material.

Table 3. Weather Data During Insecticide Applications at Tokar, Sudan 3/10 - 3/13, 1988.

Date	Insecticide and Application period	Time	Plot	Appl. Plot Sequence	Temp. Wet Bulb °F	Temp. Dry Bulb °F	Rel. Hum. %	Wind Dir.	Wind Vel. MPH	Sky
3/10	Chlorpyrifos	0700		1	67	74	72	NE	11.0	cloudy
	(0700-1130)	0745		1	68	76	67	NE	9.5	"
		0830		2	69	78	62	NE	14.3	"
		1045		3	70	84	48	NE	10.4	"
		1315		-	70	84	48	NE	13.0	"
		1800		-	67	77	60	NE	6.0	"
3/11	Fenitrothion	0640			63	70	68	N	-	p.cl.
	(0730-1100)	0745		1	66	77	58	N	9.0	clear
	(1615-1715)	0900		1	69	82	54	N	10.0	"
		1000		2	69	85	45	N	11.2	"
		1100		2	68	84	45	N	-	"
		1620		3	68	79	58	N	13.0	"
3/12	Lambda-	0640		1 (part)	63	71	65	N	6.5	p.cl.
	Cyhalothrin	0800		2	64	77	50	N	11.5	"
	(0640-1115)	0900			67	79	54	N	13.0	"
		1000		1 (part), 3	69	83	50	N	14.0	"
3/13	Bendiocarb	0600		1	69	74	80	N	4.5	cl,r*
	(0600-0945)	0700		2	70	77	70	N	14.0	cloudy
		0800		3	70	77	52	N	14.3	"
		1000			72	81	65	N	18.0	"
		1600			71	81	62	N	-	"

*trace of rain

In summary, the weather conditions during the applications ranged from a low of 70°F and 65% relative humidity to a high of 84°F and 45% relative humidity. The wind velocity ranged from 4.5 mph up to 18 mph.

On March 13, the aircraft license expired and was grounded. In addition, two of the chemical formulations, carbaryl and malathion, were held up in Khartoum. It was expected that the project would be held up one to two weeks before the other materials could be applied.

c. Spray deposition. Spray deposition was sampled with nine targets placed on a 200 m x 200 m grid near the center of each spray block. If possible, each target was placed in an open area. One oil sensitive sheet (2" x 2") was attached to a Kromecote card (4½" x 6½") and placed in a plastic card holder. This type of target was used for sampling the applications of Chlorpyrifos, Fenitrothion, and Bendiocarb. The targets used for Lambda-Cyhalothrin were magnesium oxide coated glass slides mounted in standard 2" x 2" slide holders. The magnesium oxide slides were supplied by Norman Thelwell, ICI, England.

In an effort to minimize drift losses, the pilot was instructed to fly as low as it was safe to do so. The safe height varied for different locations but ranged from 2-5 m. Although the winds were higher than "ideal" for all applications, it was felt that the prevailing winds were typical of conditions that may occur during emergency programs to control the desert locust. Also the main criteria was based on whether representative spray deposition occurred in the areas sampled within the plot. Thus, the visual observations of the oil sensitive cards verified that adequate deposition was achieved in the central part of the plot. The hypothesis was that, although the swaths were displaced downwind, all swaths would be displaced and would likely result in well overlapped patterns and satisfactory deposits in the sample areas within the plot. It was of course quite likely that a lower deposition occurred on the upwind edge of the plot with some deposition extending beyond the downwind edge of the flagged swath, however the swath displacement was likely a small percentage of the swath length of 1000 meters. In the near future, I intend to make some calculations with a theoretical model that will help estimate the swath displacement for above

wind conditions.

All of the spray deposit samples were stored and serves as a record of the deposition obtained in each plot. If necessary, deposition densities (no. of drops/cm^2) can be obtained at a later date.

The drop size produced by the Micronair atomizer is a function of RPM, airspeed, flow rate and physical properties of the formulation. Thus, the adjustment of the cage RPM is the major means of regulating the drop size produced for a given application. The desired rotational speed of 6000 RPM was selected based on previous experience and concensus of the manufacturer and chemical company representatives. The actual measurement of drop size spectrum in the field is extremely difficult because of many factors such as loss or fine fraction due to drift will bias results if only drops deposited on targets are measured and collection medium may produce a stain size considerably larger than the spherical diameter. The oil sensitive cards are particularly troublesome for drop size measurements because the spread factor is unknown and different for each formulation. The magnesium oxide coated plates offer a more consistent "spread factor" but frequently are difficult to assess. ICI plans to measure the drop size for the Lambda-Cyhalothrin application. It will be interesting to see if the results of drop size measurements with the magnesium oxide coatings are realistic and useful for future studies. An estimate of the drop size spectrum produced can best be determined from tests conducted under controlled and similar conditions in a wind tunnel equipped with a drop spectrum measurement system. We have made some drop size measurements using the AU 5000 atomizer with our laser Particle Measurement system in a wind tunnel at the University of California, Davis. From a few limited tests, I

estimate that for the conditions used in these studies the volume median diameter was approximately 150 μm.

G. Recommendations and Suggestions

1. Future programs should not only consider the cost of the aircraft applications but carefully evaluate the type, condition and license of aircraft and equipment, the availability of mechanics in the field, the availability of spare parts in the field, and the experience, license and qualifications of the pilot.

2. The Micronair computer system that was installed on the aircraft was extremely valuable in conducting the tests. The addition of a portable printer (available from Mft.) would facilitate collection of precise data during spray applications.

3. The aircraft should have a properly installed transceiver, antenna, and helmet with installed headset and noise-cancelling microphone.

4. A transceiver should be provided to each of the four drivers of the ground flagger vehicles. The units should be able to reliably transmit and receive messages from the pilot or drivers in the other vehicles as far as five miles away.

5. A simple "closed system" should be provided to transfer the formulations from 200 L drums as well as 20 L containers to the aircraft.

6. The Loran radio equipment should be evaluated for potential use. A portable hand-held unit is available that could be used effectively to mark plot boundary coordinates and to easily return to the same location. An aircraft unit is also available that could guide the pilot directly to desired coordinates and can also automatically record the paths flown and sprayed on each plot. Thus, any irregularities or skips in the swaths could be identified.

MALI INVENTORIES

PROPERTY INVENTORY

DYNAMAC INTERNATIONAL BAMAKO FIELD OFFICE

CATEGORY: AUTOMOTIVE DATE: JANUARY 6, 1988

LOCATION	QUANTITY	DESCRIPTION
	5	TOYOTA LAND CRUISER 4X4 UTILITY VEHICLES
MAGAZINE	5	TIRES, MICHELIN
BOX 1	4	INNER TUBES,7.50/8.25-16,MICHELIN
BOX 1	3	TIP TOP TIRE PATCH KITS,TT21
BOX 1	4	MOTOR MOUNTS, TOYOTA LAND CRUISER
BOX 1	1	WATER PUMP, TOYOTA LAND CRUISER
BOX 1	5	FAN BELTS
BOX 1	5	FAN BELTS, AIR CONDITIONING
BOX 1	5	FUEL LINE FILTER ELEMENTS
BOX 1	4	HEAD LAMP BULBS
BOX 1	1	TUBELESS TIRE REPAIR KIT
BOX 1	1	IGNITION WIRE HARNESS,TOYOTA
BOX 1	1	BAG OF ASSORTED TIRE PATCHES
BOX 1+I	14	BUNGEE CORDS
BOX 1	1	JUMPER CABLE
BOX 1	1	PAIR, JUMPER CABLE CLAMPS
BOX 1	2	FUEL LINES, TOYOTA
BOX 1	1	PACKET OF SPARE FUSES
BOX 1	1	SPARE HEAD LAMP,TOYOTA
BOX 1	9	CONSTRICTION BANDS(VARIOUS SIZES)
BOX 3	1	2-TON CAR JACK,HYDRAULIC
BOX 3	2	4-TON CAR JACK,HYDRAULIC
BOX 3	1	6-TON CAR JACK,HYDRAULIC
BOX 7	17	BATTERY ACID,1 LITER
BOX 7	5	ATF 220,AUTO.TRANS.FLUID,2 LITERS
BOX 7	9	WD4,SPRAY CANS,9oz.
BOX 7	2	HD140 OIL,2 LITERS
BOX 9	1	HEAVY TOW CHAIN
BOX 9	1	ABC FIRE EXTINGUISHER, CAR SIZE
BOX I	1	220V MAX AMP CAR BATTERY RECHARGER
BOX I	1	220V MANOR CAR BATTERY RECHARGER
BOX M	3	BRUSHES WITH HOSE FITTING
MAGAZINE	1	LUGGAGE RACK FOR LAND CRUISER
MAGAZINE	1	WINDOW SQUEEGIE
MAGAZINE	24	METAL JERRY CANS
MAGAZINE	1	SET OF 2 SAND TRACKS

PROPERTY INVENTORY

DYNAMAC INTERNATIONAL BAMAKO FIELD OFFICE

CATEGORY: HAND TOOLS DATE: JANUARY 6, 1988

LOCATION	QUANTITY	DESCRIPTION
BOX 2	5	4mm SOCKET, 1/4 INCH DRIVE
BOX 2	5	5mm SOCKET, 1/4 INCH DRIVE
BOX 2	5	6mm SOCKET, 1/4 INCH DRIVE
BOX 2	5	7mm SOCKET, 1/4 INCH DRIVE
BOX 2	5	8mm SOCKET, 1/4 INCH DRIVE
BOX 2	5	8mm SOCKET,LONG, 1/4 INCH DRIVE
BOX 2	2	8mm SOCKET, 3/8 INCH DRIVE
BOX 2	3	9mm SOCKET, 1/4 INCH DRIVE
BOX 2	5	9mm SOCKET,LONG, 1/4 INCH DRIVE
BOX 2	3	9mm SOCKET, 3/8 INCH DRIVE
BOX 2	4	10mm SOCKET, 1/4 INCH DRIVE
BOX 2	5	10mm SOCKET,LONG, 1/4 INCH DRIVE
BOX 2	5	10mm SOCKET, 3/8 INCH DRIVE
BOX 2	4	11mm SOCKET, 1/4 INCH DRIVE
BOX 2	5	11mm SOCKET,LONG, 1/4 INCH DRIVE
BOX 2	5	11mm SOCKET, 3/8 INCH DRIVE
BOX 2	5	12mm SOCKET, 1/4 INCH DRIVE
BOX 2	5	12mm SOCKET,LONG, 1/4 INCH DRIVE
BOX 2	5	12mm SOCKET, 3/8 INCH DRIVE
BOX 2	2	13mm SOCKET, 1/4 INCH DRIVE
BOX 2	4	13mm SOCKET,LONG, 1/4 INCH DRIVE
BOX 2	5	13mm SOCKET, 3/8 INCH DRIVE
BOX 2	5	13mm SOCKET,LONG,3/8 INCH DRIVE
BOX 2	5	14mm SOCKET, 3/8 INCH DRIVE
BOX 2	5	14mm SOCKET,LONG,3/8 INCH DRIVE
BOX 2	5	15mm SOCKET, 3/8 INCH DRIVE
BOX 2	5	15mm SOCKET,LONG,3/8 INCH DRIVE
BOX 2	5	15mm SOCKET, 1/2 INCH DRIVE
BOX 2	5	16mm SOCKET, 3/8 INCH DRIVE
BOX 2	5	16mm SOCKET,LONG,3/8 INCH DRIVE
BOX 2	5	16mm SOCKET, 1/2 INCH DRIVE
BOX 2	5	17mm SOCKET, 3/8 INCH DRIVE
BOX 2	5	17mm SOCKET,LONG,3/8 INCH DRIVE

008,016,024,032,040,048,056,064,072.

PROPERTY INVENTORY

DYNAMAC INTERNATIONAL BAMAKO FIELD OFFICE

CATEGORY: HAND TOOLS DATE: JANUARY 6, 1988

LOCATION	QUANTITY	DESCRIPTION
BOX 2	5	17mm SOCKET, 1/2 INCH DRIVE
BOX 2	5	18mm SOCKET, 3/8 INCH DRIVE
BOX 2	5	18mm SOCKET, 1/2 INCH DRIVE
BOX 2	3	OPEN END WRENCHES,7mm +9mm
BOX 2	3	OPEN END WRENCHES,6mm +8mm
BOX 2	3	OPEN END WRENCHES,10mm +11mm
BOX 2	4	OPEN END WRENCHES,12mm +14mm
BOX 2	3	OPEN END WRENCHES,16mm +18mm
BOX 2	3	5/32 SOCKET, 1/4 INCH DRIVE
BOX 2	6	3/16 SOCKET,1/4 INCH DRIVE
BOX 2	5	7/32 SOCKET,1/4 INCH DRIVE
BOX 2	6	1/4 SOCKET, 1/4 INCH DRIVE
BOX 2	6	9/32 SOCKET,1/4 INCH DRIVE
BOX 2	6	5/16 SOCKET,1/4 INCH DRIVE
BOX 2	3	5/16 SOCKET,LONG,1/4 INCH DRIVE
BOX 2	6	11/32 SOCKET,1/4 INCH DRIVE
BOX 2	3	11/32 SOCKET,LONG,1/4 INCH DRIVE
BOX 2	6	3/8 SOCKET,1/4 INCH DRIVE
BOX 2	3	3/8 SOCKET,LONG,1/4 INCH DRIVE
BOX 2	9	3/8 SOCKET,3/8 INCH DRIVE
BOX 2	6	7/16 SOCKET,1/4 INCH DRIVE
BOX 2	3	7/16 SOCKET,LONG,1/4 INCH DRIVE
BOX 2	9	7/16 SOCKET,3/8 INCH DRIVE
BOX 2	3	7/16 SOCKET,1/2 INCH DRIVE
BOX 2	6	1/2 SOCKET,1/4 INCH DRIVE
BOX 2	3	1/2 SOCKET,LONG,1/4 INCH DRIVE
BOX 2	9	1/2 SOCKET,3/8 INCH DRIVE
BOX 2	3	1/2 SOCKET,LONG,3/8 INCH DRIVE
BOX 2	3	1/2 SOCKET,1/2 INCH DRIVE
BOX 2	6	9/16 SOCKET,3/8 INCH DRIVE
BOX 2	3	9/16 SOCKET,LONG,3/8 INCH DRIVE
BOX 2	3	9/16 SOCKET,1/2 INCH DRIVE
BOX 2	6	5/8 SOCKET,3/8 INCH DRIVE

008,016,024,032,040,048,056,064,072.

PROPERTY INVENTORY PAGE 4 OF 24

DYNAMAC INTERNATIONAL BAMAKO FIELD OFFICE

CATEGORY: HAND TOOLS DATE: JANUARY 6, 1988

LOCATION	QUANTITY	DESCRIPTION
BOX 2	3	5/8 SOCKET,LONG,3/8 INCH DRIVE
BOX 2	3	5/8 SOCKET,SPARK PLUG,3/8 INCH DRIVE
BOX 2	3	5/8 SOCKET,1/2 INCH DRIVE
BOX 2	6	11/16 SOCKET,3/8 INCH DRIVE
BOX 2	3	11/16 SOCKET,LONG,3/8 INCH DRIVE
BOX 2	3	11/16 SOCKET,1/2 INCH DRIVE
BOX 2	6	3/4 SOCKET,3/8 INCH DRIVE
BOX 2	3	3/4 SOCKET,LONG,3/8 INCH DRIVE
BOX 2	3	3/4 SOCKET,1/2 INCH DRIVE
BOX 2	6	13/16 SOCKET,3/8 INCH DRIVE
BOX 2	3	13/16 SOCKET,1/2 INCH DRIVE
BOX 2	2	5/16 WRENCH
BOX 2	3	3/8 WRENCH
BOX 2	2	7/16 WRENCH
BOX 2	2	1/2 WRENCH
BOX 2	3	9/16 WRENCH
BOX 2	3	5/8 WRENCH
BOX 2	3	3/4 WRENCH
BOX 2	4	6in. SOCKET EXTENSION,3/8 INCH DRIVE
BOX 2	5	3in. SOCKET EXTENSION,3/8 INCH DRIVE
BOX 2	4	3in. SOCKET EXTENSION,1/4 INCH DRIVE
BOX 2	4	1/4 DRIVE SOCKET DRIVE,RACHET
BOX 2	5	3/8 DRIVE SOCKET DRIVE,RACHET
BOX 2	5	1/2 DRIVE SOCKET DRIVE,RACHET
BOX 2	5	1/2 DRIVE SOCKET DRIVE,NON-RACHETING
BOX 2	2	ADJUSTABLE OPEN END WRENCH,250mm
BOX 2	1	ADJUSTABLE OPEN END WRENCH,200mm
BOX 2	1	ADJUSTABLE OPEN END WRENCH,150mm
BOX 2	4	PLIERS,ARC JOINT,9 1/2 INCH
BOX 2	5	PLIERS,SLIP JOINT,6 3/4 INCH
BOX 2	4	PLIERS,NEEDLE NOSE,6 INCH
BOX 2	3	LOCKING PLIERS, STRAIGHT,10 INCH
BOX 2	4	LOCKING PLIERS, STRAIGHT,7 1/2 INCH

PROPERTY INVENTORY

DYNAMAC INTERNATIONAL BAMAKO FIELD OFFICE

CATEGORY: HAND TOOLS DATE: JANUARY 6, 1988

LOCATION	QUANTITY	DESCRIPTION
BOX 2	3	LOCKING PLIERS,CURVED,5 INCH
BOX 2	1	LOCKING PLIERS,LONG NOSE,6 INCH
BOX 2	1	PIPE WRENCH,12 INCH
BOX 2	1	BOX WRENCH,19mm
BOX 2	1	BOX WRENCH,24mm
BOX 2	5	SCREWDRIVER HANDLE SOCKET DRIVE
BOX 2	5	SCREWDRIVER,PHILLIPS,#2 X 8in
BOX 2	4	SCREWDRIVER,PHILLIPS,#1 x 3in
BOX 2	5	SCREWDRIVER,PHILLIPS,#2 X 4in
BOX 2	4	REED PRINCE (AWL)
BOX 2	4	SCRATCH AWL
BOX 2	5	SCREWDRIVER,PHILLIPS,#0 X 2 1/2 INCH
BOX 2	5	SCREWDRIVER,PHILLIPS,STUBBY,#2
BOX 2	5	SCREWDRIVER,TORX,#10
BOX 2	5	SCREWDRIVER,TORX,#15
BOX 2	5	SCREWDRIVER,TORX,#20
BOX 2	5	SCREWDRIVER,TORX,#25
BOX 2	5	SCREWDRIVER,TORX,#30
BOX 2	4	SCREWDRIVER,4-WAY POCKET
BOX 2	4	SCREWDRIVER,SLOTTED,1/4 X 1 1/2 INCH
BOX 2	5	SCREWDRIVER,SLOTTED,1/4 X 4 INCH
BOX 2	5	SCREWDRIVER,SLOTTED,1/4 X 6 INCH
BOX 2	4	SCREWDRIVER,SLOTTED,1/8 X 2 INCH
BOX 2	4	SCREWDRIVER,SLOTTED,1/8 X 4 INCH
BOX 2	6	SCREWDRIVER,SLOTTED,3/16 X 9 INCH
BOX 2	2	SCREWDRIVER,PHILLIPS,SMALL
BOX 2	1	SCREWDRIVER,SLOTTED,TOYOTA
BOX 2	1	MILL FILE, 10 INCH
BOX 2	2	TAPER FILE,7 INCH
BOX 2	1	HALF ROUND FILE,8 INCH
BOX 2	1	RAT TAIL FILE, 8 INCH
BOX 2	5	PRICK PUNCH,3/8 INCH
BOX 2	5	CENTER PUNCH,3/8 INCH

PROPERTY INVENTORY

DYNAMAC INTERNATIONAL BAMAKO FIELD OFFICE

CATEGORY: HAND TOOLS DATE: JANUARY 6, 1988

LOCATION	QUANTITY	DESCRIPTION
BOX 2	5	PIN PUNCH,3/32 INCH
BOX 2	5	PIN PUNCH,1/8 INCH
BOX 2	5	PIN PUNCH,1/16 INCH
BOX 2	5	COLD CHISEL,1/2 INCH
BOX 2	5	COLD CHISEL,3/4 INCH
BOX 2	5	LINE-UP TOOL,3/16 INCH
BOX 2	5	LINE-UP TOOL,5/32 INCH
BOX 2	1	CHISEL, LARGE
BOX 2	2	HEX WRENCH SETS, 11 PIECE,1.5-8mm
BOX 2	2	HEX WRENCH SETS, 14 PIECE,1.5-7mm
BOX 2	1	METRIC TAP SET WITH HANDLE
BOX 1	5	TIRE PRESSURE GAUGES (LBS.)
BOX 1	2	SPARK PLUG WRENCHES
BOX 3	1	HAMMER,BALL PEEN,32 oz.
BOX 3	4	HAMMER,BALL PEEN,24 oz.
BOX 3	1	CLAW HAMMER
BOX 3	2	HAND AXES
BOX 3	3	SPARE HAMMER HANDLES,HICKORY
BOX 9	1	PAINT BRUSH
BOX 3	3	HACK SAW
BOX 3	3	WOOD SAWS
BOX 3	1	CARPENTERS LEVEL
BOX 3+I	2	TRIMMING SHEARS
BOX 3	1	PRUNING SHEARS
BOX 3	4	BUSH HOOKS
BOX 3	1	CROW BAR,LARGE
BOX 3	2	CROW BAR,SMALL
BOX 3	5	MACHETES
BOX 3	1	MACHETE WITH LEATHER SHEATH
BOX 3	6	SHOVELS WITHOUT HANDLES
BOX 3	1	PICK WITHOUT HANDLE
BOX 3	1	1/2 TON VERTICAL WINCH
BOX 3	1	PULLEY

PROPERTY INVENTORY PAGE 2 OF 24

DYNAMAC INTERNATIONAL BAMAKO FIELD OFFICE

CATEGORY: HAND TOOLS DATE: JANUARY 6, 1988

LOCATION	QUANTITY	DESCRIPTION
BOX 3	1	SET OF 9 ASSORTED WOOD AND PIPE CLAMPS
BOX 3	1	SET OF CAR REPAIR TOOLS IN SMALL VINYL CASE
BOX I	1	ARROW HEAVY DUTY STAPLE GUN,T-50
BOX I	1	DUO FAST STAPLE GUN
BOX I	1	MAX TGA STAPLE GUN
BOX I	1	BOX OF 5000 10/13AR STAPLES
BOX I	1	BOX OF 1250 14mm STAPLES
BOX I	1	BOX OF 1250 13mm STAPLES
BOX I	1	LUFKIN 5m. MEASURING TAPE

008,016,024,032,040,048,056,064,072.

PROPERTY INVENTORY PAGE 8 OF 24

DYNAMAC INTERNATIONAL BAMAKO FIELD OFFICE

CATEGORY: FLAGGING DATE: JANUARY 6, 1988

LOCATION	QUANTITY	DESCRIPTION
BOX 4	3	SPRAY PAINT,YELLOW,13oz.
BOX 4	5	SPRAY PAINT,BLUE,13oz.
BOX 4	5	SPRAY PAINT,RED,13oz.
BOX 4	5	SPRAY PAINT,GREEN,13oz.
BOX 4	3	SPRAY PAINT,WHITE,13oz.
BOX 4	4	SPRAY PAINT,BLACK,13oz.
BOX D	2	PARTIAL ROLLS WHITE FLAGGING,PLASTIC,2ft. WID
BOX D	8	PARTIAL ROLLS WHITE FLAGGING,PLASTIC,1 1/4 in
BOX D	1	PARTIAL ROLL RED FLAGGING,PLASTIC,1 1/4 in. W
BOX D	1	ROLL YELLOW MASKING TAPE, 3in. WIDE
BOX D	2	ROLLS WHITE MASKING TAPE,3in. WIDE
BOX D	12	ROLLS WHITE MASKING TAPE,1in. WIDE
BOX D	12	VENTILATION SMOKE TUBES,(SMOKE MARKERS)
BOX D	5	PACKETS BLUE DYE,POWDER
BOX D	1	PARTIAL ROLL GREEN FLAGGING,PLASTIC,15.5in. W
BOX D	1	PARTIAL ROLL YELLOW FLAGGING,PLASTIC,15.5in.
BOX D	2	ROLLS BLUE FLAGGING,PLASTIC,USED
BOX D	101	WHITE MARKING STAKES,PLASTIC
MAGAZINE	1	ROLL RED PLASTIC FLAGGING

DYNAMAC INTERNATIONAL BAMAKO FIELD OFFICE

CATEGORY: HARDWARE DATE: JANUARY 6, 1988

LOCATION	QUANTITY	DESCRIPTION
BOX 4	1	PARTIAL ROLL MATTING MESH,PLASTIC,+ 2m.
BOX 4	1	PARTIAL ROLL OF SCREENING ,METAL,+ 4m.
BOX 9	2	JAPPY HAND PUMPS
BOX 9	1	HAND PUMP FOR BARRELS
BOX 9	10	ANGLE BRACKETS FOR SHELVES
BOX 9	4	10 in. MACHINE BOLTS
BOX 9	5	SLIDE BOLTS FOR DOORS
BOX 9	2	DOOR HINGES,LIGHTWEIGHT
BOX 9	4	CEMENT ANCHORING BOLTS
BOX I	1	ROLL HEAVY GAUGE SHEET METAL,14in. WIDE
BOX I	1	ROLL FIBERGLASS SCREENING,4ft.x7ft.
BOX I	1	TUBE TRINEPON CONTACT ADHESIVE
BOX V	1	ROLL GREEN PLASTIC HOSE
MAGAZINE	2	ROLL CLEAR PLASTIC SHEETING
MAGAZINE	1	ROLL GREEN PLASTIC SHEETING
MAGAZINE	1	ROLL CLEAR ACETATE
MAGAZINE	5	ROLLS WIRE FENCING
MAGAZINE	27	SHEETS OF PLYWOOD
MAGAZINE	8	SHEETS OF METAL ROOFING
MAGAZINE	36	BARRELS

PROPERTY INVENTORY

DYNAMAC INTERNATIONAL BAMAKO FIELD OFFICE

CATEGORY: SCIENTIFIC DATE: JANUARY 6, 1988

LOCATION	QUANTITY	DESCRIPTION
BOX 4	120	SAMPLE BOTTLES
BOX C+K	311	50ml. SAMPLING TUBES,CENTRIFUGE TYPE,PLASTIC
BOX C	200	64X10.25 BLOOD SAMPLE TUBES
BOX C	385	MICROSCOPE SLIDES,GLASS
BOX C	1	SLING PSYCHROMETER
BOX C	200	#2 PINS FOR INSECTS
BOX C	1	FLORITE AIR VELOCITY METER
BOX C	2	1kg. SPRING BALANCE
BOX C	3	DWYER WIND METERS, HAND HELD TYPE
BOX C	1	HUER STOP WATCH
BOX C	1	SPRAY CARD READING GLASS
BOX C	3	TAYLOR SOIL TEST THERMOMETERS
BOX C	1	FISHER STEREO MICROSCOPE
BOX C	1	TRADE WINDS ANEMOMETER
BOX C	2	KESON MEASURING TAPE,300ft.
BOX C	3	PACKETS OF WOODEN DOWELS
BOX C	4	GRASS ROOTS RAIN GUAGES
BOX C	12	PETRI DISHES,BOTTOMS ONLY
BOX C	16	OAKFIELD SOIL SAMPLERS
BOX C	36	SNAP TRAPS,(MOUSE TRAPS)
BOX C	3	INSECT PINNING BOARDS
BOX C	21	SOIL SCOOPS,PLASTIC
BOX C	2	500ml. GRADUATED CYLINDERS,PLASTIC
BOX E+H	87	SMALL MAMMAL TRAPS(LIVE TRAPS)
BOX E+H	48	MIST NETS(FOR BIRD CAPTURE)
BOX F	198	PHERON ADULT MONITORING STICKY TRAPS
BOX H	11	3lb.4oz. CARTONS OF SPINKLEEN GLASSWARE SOAP
BOX J	274	FISHER 9x18 PLASTIC SAMPLE BAGS, ZIP-LOCK
BOX J	1000	WHIRL-PAK 6OZ PLASTIC SAMPLE BAGS
BOX J	1000	WHIRL-PAK 18OZ PLASTIC SAMPLE BAGS
BOX J	8	CLOTH SAMPLE BAGS
BOX J	277	4X8 PLASTIC SAMPLE BAGS, ZIP-LOCK
BOX J	21	NALGENE 500ml. PLASTIC SAMPLE BOTTLES

PROPERTY INVENTORY

DYNAMAC INTERNATIONAL BAMAKO FIELD OFFICE

CATEGORY: SCIENTIFIC DATE: JANUARY 6, 1988

LOCATION	QUANTITY	DESCRIPTION
BOX J	1	BULB VACUUM PUMP, HAND HELD
BOX K	49	AMBER GLASS SAMPLE BOTTLES, 16oz
BOX K	4	CLEAR GLASS SAMPLE BOTTLES, 16oz
BOX K	5	BIOQUIP GLASS SAMPLE BOTTLES, APPROX. 10oz
BOX K	6	CLEAR GLASS SAMPLE BOTTLES, APPROX. 2 QT.
BOX K	24	CONTAINER LIDS FOR 6-8 QT CONTAINERS
BOX K	61	PLASTIC 50mg SAMPLE TUBES
BOX L	22	PLASTIC CONTAINERS, 6 QT.
BOX M	6	SAMPLING NETS WITH HANDLES
BOX W	70	PACKETS OF CF/OIL SENSITIVE SPRAY CARDS
BOX W	9	PACKETS OF 52X76 WATER SENSITIVE SPRAY CARDS
BOX W	3	ROLLS CFT OIL SENSITIVE PAPER
MAGAZINE	2	STAINLESS STEEL PAILS
BOX J	274	FISHER 9X18 PLASTIC SAMPLE BAGS, ZIP LOCK TYP
BOX J	1000	WHIRL-PAK 6oz. PLASTIC SAMPLE BAGS
BOX J	1000	WHIRL-PAK 18oz. PLASTIC SAMPLE BAGS
BOX J	8	CLOTH SAMPLE BAGS
BOX J	277	4X8 PLASTIC SAMPLE BAGS,ZIP LOCK TYPE
BOX J	21	NALGENE 500ml. PLASTIC SAMPLE BOTTLES
BOX J	1	BULB VACUUM PUMP, HAND HELD TYPE
BOX K	29	AMBER GLASS SAMPLING BOTTLES,16oz.
BOX K	4	CLEAR GLASS SAMPLING BOTTLES,16oz.
BOX K	5	BIOQUIP GLASS SAMPLING JARS,+10oz.
BOX K	6	CLEAR GLASS SAMPLING JARS,+2qt.
BOX K	24	PLASTIC LIDS FOR 6-8qt. CONTAINERS
BOX L	22	6qt. PLASTIC CONTAINERS
MAGAZINE	210	PLASTIC RINGS

PROPERTY INVENTORY

DYNAMAC INTERNATIONAL BAMAKO FIELD OFFICE

CATEGORY: CAMPING GEAR DATE: JANUARY 6, 1988

LOCATION	QUANTITY	DESCRIPTION
BOX S	12	SINGLE PLACE SLEEPING BAGS,NYLON
BOX 8+M	21	MOSQUITO NETS
BOX G	3	ALL WEATHER SIRVIVAL BLANKETS
BOX G	1	4qt. CANVAS SIDE CANTEEN
BOX G+Y	3	1qt. CANVAS SIDE CANTEENS
BOX G	1	ROLL 15lb. TEST FISHING LINE
BOX G	2	WRIST ROCKET SLING SHOTS
BOX G	2	SPARE RUBBER BAND FOR WRIST ROCKETS
BOX G	1	DURABEAM FLASHLIGHT,2 D CELL SIZE
BOX G	2	DURABEAM FLASHLIGHT,6 VOLT LANTERN SIZE
BOX G	6	6 VOLT LANTERN BATTERIES
BOX G	1	220V. ELECTRIC CLOTHES IRON
BOX G	2	GARDEN SPADES,SMALL
BOX G	3	TUBES CLOTH DYE,YELLOW
BOX G	2	TUBES CLOTH DYE,RED
BOX G	2	75X35mm WIDE ANGLE BINOCULARS
BOX G	1	10X50mm AEROLITE BINOCULARS
BOX G	4	PERSONAL SIZE FIRST AID KITS
BOX G	1	SCHRADE BUCK KNIFE
BOX G	1	SUUNTO HAND HELD COMPASS
BOX G	1	JAR OF MINK OIL,7oz.
BOX G	8	1oz. BOTTLES OF INSECT REPELLENT
BOX G	10	BOTTLES OF WATER PURIFICATION TABLETS, 50 TAB
BOX G	1	HEAVY GAUGE TENT ANCHOR LINE
BOX G	3	REGULATORS FOR BOTTLED BUTANE GAS
BOX H	14	KWIK COLD FIRST AID PACKS
BOX H	5	KWIK HOT FIRST AID PACKS
BOX M	3	PRIMAS GAS LANTERNS
BOX M	2	LUMNOGAS LAMPS FOR LARGE GAS BOTTLES
BOX M	1	WALL MIRROR
BOX M	12	SLEEPING BAG PADS
BOX M	7	NYLON STUFF BAGS
MAGAZINE	3	ICE CHESTS

PROPERTY INVENTORY

DYNAMAC INTERNATIONAL BAMAKO FIELD OFFICE

CATEGORY: CAMPING GEAR DATE: JANUARY 6, 1988

LOCATION	QUANTITY	DESCRIPTION
BOX O	2	BOTTLES KKOTE SEAM SEALER FOR NYLON FABRICS
BOX P+Q	2	EUREKA 3-4 PLACE DOME TENTS
BOX W	1	COLEMAN GAS CAMPING STOVE
MAGAZINE	5	LARGE GAS BOTTLES
MAGAZINE	3	SMALL GAS BOTTLES
MAGAZINE	1	20 LITER PLASTIC WATER JUG
MAGAZINE	1	30 LITER PLASTIC WATER JUG
MAGAZINE	8	ICE PAKS FOR THERMOS CHESTS
MAGAZINE	1	LARGE PLASTIC WASH TUB
BOX W	2	BLANKETS
BOX W+Z	2	OCCILATING FAN
BOX Y	1	WALL MOUNT FIRST AID KIT, J+J
BOX Z	5	HAND HELD WALKIE-TALKIE TYPE RADIOS
BOX Z	1	220 TO 110V TRANSFORMER
BOX Z	4	220/110v TO 14.5V TRANSFORMERS
BOX Z	4	CAR CIGARETTE LIGHTER ADAPTERS FOR RADIOS
MAGAZINE	2	THERMOS JUGS
MAGAZINE	24	METAL FOOT LOCKERS
MAGAZINE	18	FOAM MATTRESSES

008,016,024,032,040,048,056,064,072.

PROPERTY INVENTORY PAGE 14 OF 24

DYNAMAC INTERNATIONAL BAMAKO FIELD OFFICE

CATEGORY: PROTECTIVE GEAR DATE: JANUARY 6, 1988

LOCATION	QUANTITY	DESCRIPTION
BOX A	4	ULTRA-TWIN RESPIRATORS,FULL FACE,MED.
BOX A	4	ULTRA-TWIN RESPIRATORS,FULL FACE,LRG.
BOX A	96	CHEMICAL CARTRIDGES FOR RESPIRATORS
BOX A	950	DISPOSABLE PLASTIC GLOVES,MEDIUM
BOX A	1000	DISPOSABLE PLASTIC GLOVES,LARGE
BOX A	8	SAFTEY GOGGLES,PLASTIC
BOX A	7	DISPOSABLE RESPIRATORS,PLASTIC
BOX A+B	3	LEATHER GLOVES,PAIR
BOX A	2	LATEX GLOVES,PAIR
BOX A	1	RUBBER BOOTS,PAIR
BOX A	8	VINYL LEGGINGS
BOX A	3	VINYL HEAD COVERS,HOOD-TYPE
BOX A+B	81	DISPOSABLE OVERALLS,PLASTIC
BOX B	300	DISPOSABLE PLASTIC HEAD COVERS,HOOD-TYPE
BOX B	13	SAFETY HELMETS,PLASTIC

008,016,024,032,040,048,056,064,072.

PROPERTY INVENTORY PAGE 15 OF 24

DYNAMAC INTERNATIONAL BAMAKO FIELD OFFICE

CATEGORY: OTHER SPARE PARTS DATE: JANUARY 6, 1988

LOCATION	QUANTITY	DESCRIPTION
BOX I	1	PACKET OF PARTS FOR GENERATOR,LISTER
BOX I	5	AIR FILTER ELEMENTS,LISTER GENERATOR
BOX I	4	OIL FILTER ELEMENTS,LISTER GENERATOR
BOX I	4	FUEL FILTER ELEMENTS,LISTER GENERATOR

008,016,024,032,040,048,056,064,072.

PROPERTY INVENTORY PAGE 16 OF 24

DYNAMAC INTERNATIONAL BAMAKO FIELD OFFICE

CATEGORY: OTHER EQUIPMENT DATE: JANUARY 6, 1988

LOCATION	QUANTITY	DESCRIPTION
BOX S+T	2	FRESH AIR AIR CONDITIONERS
BOX V	2	KNATH MAUAL FUEL PUMPS
BOX V	1	MANUAL PUMP. BARREL FITTED
BOX V	3	FLEXIBLE SUCTION HOSE FOR PUMPS
BOX V	2	91cm HOSES FOR ROBIN PUMPS
BOX W	2	ROBIN SUPREME GASOLINE POWERED FUEL PUMPS
BOX W	1	220V ELECTRIC GENERATOR, GASOLINE POWERED
MAGAZINE	1	BARREL JACK

008,016,024,032,040,048,056,064,072.

PROPERTY INVENTORY PAGE 17 OF 24

DYNAMAC INTERNATIONAL BAMAKO FIELD OFFICE

CATEGORY: OFFICE SUPPLIES+EQUIP DATE: JANUARY 6, 1988

LOCATION	QUANTITY	DESCRIPTION
MAGAZINE	42	FIELD NOTEBOOKS
MAGAZINE	2	CASES PEST. RESIDUE HISTORY SHEETS
MAGAZINE	1	CASE DYNAMAC RESIDUE TAG FORMS
MAGAZINE	1	BOX ASSORTED OFFICE SUPPLIES
MAGAZINE	2	1 DRAWER METAL DESKS
MAGAZINE	1	3 DRAWER METAL DESK
MAGAZINE	1	LARGE WOODEN TABLE
MAGAZINE	3	PLASTIC + CHROME FOLDING DESK CHAIRS
MAGAZINE	3	NYLON PATIO CHAIRS
MAGAZINE	2	NYLON DESK CHAIRS
MAGAZINE	2	BROOMS
MAGAZINE	1	PLASTIC GARBAGE PAIL
BOX Y	1	DESK LAMP
BOX Y	1	ZENITH ZA-181-4 220V POWER UNIT
BOX Y	1	WIND UP EXTENSION CORD
BOX Y	1	PACKET OF DYNAMAC REQUISITION FORMS
BOX Y	4	KODAK PREPAID FILM MAILERS
BOX Y	1	TOPO MAP- NARA
BOX Y	2	TOPO MAP- MORDIAH
BOX Y	1	POSTER SIZE WORLD MAP

PROPERTY INVENTORY

DYNAMAC INTERNATIONAL BAMAKO FIELD OFFICE

CATEGORY: KITCHEN SUPPLIES DATE: JANUARY 6, 1988

LOCATION	QUANTITY	DESCRIPTION
BOX W	4	CERAMIC PLATES
BOX W	2	DISH TOWELS
BOX W	6	TIN PLATES
BOX W	10	FORKS
BOX W	6	TABLE KNIVES
BOX W	4	TEASPOONS
BOX W	5	TABLE SPOONS
BOX W	1	LADLE
BOX W	1	LARGE SERVING SPOON
BOX W	1	SPATULA
BOX W	1	LARGE SERVING FORK
BOX W	4	SMALL PLATES
BOX W	2	CERAMIC SOUP BOWLS
BOX W	4	GLASS BEER MUGS
BOX W	2	PLASTIC WATER GLASSES
BOX W	2	LARGE PLASTIC COFFEE CUPS
BOX W	1	LARGE METAL COFFEE CUP
BOX W	4	PLASTIC ICE TRAYS
BOX W	1	EXPRESSO-TYPE COFFEE POT
BOX W	1	LARGE KITCHEN KNIFE
BOX W	3	METAL COFFE CUPS
BOX W	2	LARGE PLASTIC MIXING BOWLS
BOX X	2	4 QT. CASSEROLES - ALUMINUM
BOX X	1	METAL TEAPOT
BOX X	1	SAUCE PAN
BOX X	1	TFAL FRYING PAN
BOX X	1	FRYING PAN, ALUMINUM
BOX X	1	METAL BASIN
BOX Y	2	SCRUB BRUSHES

DYNAMAC INTERNATIONAL BAMAKO FIELD OFFICE

CATEGORY: NARA FIELD CAMP DATE: JANUARY 6, 1988

LOCATION	QUANTITY	DESCRIPTION
NARA	2	ELECTROLUX 220V REFRIGERATORS
NARA	1	FLOOR MODEL 220V ELETRIC FREEZER
NARA	1	DIESEL POWERED ELECTRIC GENERATOR
NARA	1	50kg. ABC P550 FIRE EXTINGUISHER
NARA	2	5kg. ABC FIRE EXTINGUISHERS
NARA	1	PEUGEOT MODEL 154 MOBYLETTE
NARA	1	PLASTIC CANTEEN
NARA	2	200l. PLASTIC BARRELS
NARA	3	SIEVES
NARA	5	METAL SCRUB BRUSHES
NARA	1	METAL SHIFTER
NARA	1	MEAT GRINDER
NARA	1	GRATER
NARA	1	4qt. METAL MIXING BOWL
NARA	2	12in. PLATTERS
NARA	4	LARGE ALUMINUM COOKING POTS W/LIDS
NARA	2	LARGE HEAD PANS
NARA	3	SMALL HEAD PANS
NARA	2	18in. PLATTERS
NARA	2	24in. PLATTERS
NARA	5	PLASTIC BUCKETS
NARA	1	CHARCOAL STOVE
NARA	2	10l. COOKING POTS
NARA	1	PLASTIC FUNNEL
NARA	38	PLASTIC SOUP BOWLS
NARA	3	BOTTLE OPENERS
NARA	23	LARGE PLASTIC MUGS
NARA	6	ENAMELED METAL PLATES
NARA	1	BUTTER DISH
NARA	1	DISH SPONGE
NARA	41	PLASTIC CUPS
NARA	36	SMALL ALUMINUM BOWLS
NARA	25	ALUMINUM PLATES

PROPERTY INVENTORY

DYNAMAC INTERNATIONAL BAMAKO FIELD OFFICE

CATEGORY: NARA CAMP DATE: JANUARY 6, 1988

LOCATION	QUANTITY	DESCRIPTION
NARA	16	GLASS COFFEE CUPS
NARA	19	GLASS SAUCERS
NARA	1	SMALL PLASTIC COFFEE MUG
NARA	4	GLASSES
NARA	4	ALUMNINUM SOUP LADLES
NARA	2	KITCHEN KNIVES
NARA	4	POTATO PEELERS
NARA	24	TABLE KNIVES
NARA	31	FORKS
NARA	32	TEASPOONS
NARA	31	TABLESPOONS
NARA	1	LARGE FRYING PAN
NARA	1	SMALL FRYING PAN
NARA	1	SMALL ENAMELED METAL WASH BASIN
NARA	3	PLASTIC TEAPOTS
NARA	2	PLASTIC JUGS + 2 LITERS
NARA	3	SINGLE BURNER BUTANE STOVES WITH GAS BOTTLES
NARA	4	PLASTIC JERRY CANS
NARA	2	PLASTIC TRASH CAN
NARA	1	METAL TEAPOT
NARA	1	LARGE COOKING BOWL (WOK-TYPE)
NARA	16	DINING CHAIRS
NARA	7	LOUNGE CHAIRS
NARA	1	LARGE PLASTIC TABLE CLOTH
NARA	2	WHEEL BARROWS
NARA	4	SHOVELS
NARA	2	PICK AXES
NARA	1	AXE
NARA	1	PICK WITHOUT HANDLE
NARA	2	WATER FILTER ELEMENTS
NARA	9	LIGHT BULBS,FLOURESCENT TYPE
NARA	2	LIGHT FIXTURES,FLOURESCENT TYPE
NARA	3	PLASTIC SHOWER CURTAINS
NARA	1	AIR CONDITIONER

PROPERTY INVENTORY PAGE 21 OF 24

DYNAMAC INTERNATIONAL BAMAKO FIELD OFFICE

CATEGORY: NARA GUARDS DATE: JANUARY 6, 1988

LOCATION	QUANTITY	DESCRIPTION
GUARDS-N	2	FOAM MATTRESSES
GUARDS-N	2	BLANKETS
GUARDS-N	1	200l. PLASTIC WATER BARREL
GUARDS-N	2	PLASTIC SIPHON HOSES
GUARDS-N	1	FLASHLIGHT
GUARDS-N	1	MACHETE
GUARDS-N	3	SHEETS
GUARDS-N	3	CUPS
GUARDS-N	1	KITCHEN KNIFE
GUARDS-N	4	METAL JERRY CANS
GUARDS-N	1	PICK
GUARDS-N	2	METAL CHARCOAL STOVES.
GUARDS-N	3	PLATES
GUARDS-N	1	CAMP BED
GUARDS-N	3	BOWLS

PROPERTY INVENTORY

DYNAMAC INTERNATIONAL BAMAKO FIELD OFFICE

CATEGORY: OFFICE/SHORT RESIDENCE DATE: JANUARY 6, 1988

LOCATION	QUANTITY	DESCRIPTION
OFFICE	1	XEROX PHOTOCOPIER
OFFICE	1	ZENITH 181 LAPTOP COMPUTER W/ POWER SUPPLY UN
OFFICE	1	NEC LAPTOP COMPUTER (DYNAMAC)
OFFICE	1	DICONIX MODEL 150 INKJET PRINTER
OFFICE	1	EPSON MODEL HS-80P LETTERJET PRINTER (DYNAMAC
OFFICE	1	OLYMPIA MANUAL TYPEWRITER, FRENCH KEYBOARD
OFFICE	1	CASIO MODEL FR-1010 DESK TOP CALCULATOR
OFFICE	1	MS-DOS SOFTWARE PACKAGE
OFFICE	1	ABILITY PLUS SOFTWARE PACKAGE
OFFICE	2	PRINTER CABLES
OFFICE	1	CARRYING CASE FOR ZENITH 181 COMPUTER
OFFICE	1	SURGE PROTECTOR STRIP (BROKEN),110 V
OFFICE	1	WALL SOCKET MOUNTED SURGE PROTECTOR,110 V.
OFFICE	2	CIGARETTE ADAPTER, 14 V.
OFFICE	6	RADIO SHACK D CELL RECHARGEABLE NICAD BATTERI
OFFICE	1	REEL-TYPE EXTENSION CORD
OFFICE	1	DESK LAMP
OFFICE	1	3-DRAWER METAL FILE CABINET
OFFICE	1	SMALL WOODEN TABLE
OFFICE	1	ROLLING DESK CHAIR
OFFICE	1	5-TIER DESK ORGANIZER, PLASTIC
OFFICE	1	3-TIER DESK ORGANIZER, PLASTIC
OFFICE	1	DESK TOP HOLE PUNCH
OFFICE	1	METAL CASH BOX
OFFICE	1	BANK-STYLE LOCKING CASH BAG
OFFICE	3	STAPLERS
OFFICE	1	SISSORS
OFFICE	1	THERMOS ICE CHEST
OFFICE	2	DYNAMAC CACHETS
OFFICE	1	2-LITER GLASS SAMPLE JAR
OFFICE	1	9mm SOCKET, 1/4 INCH DRIVE
OFFICE	1	11mm SOCKET, 1/4 INCH DRIVE
OFFICE	1	12mm SOCKET, 3/8 INCH DRIVE

PROPERTY INVENTORY

DYNAMAC INTERNATIONAL BAMAKO FIELD OFFICE

CATEGORY: OFFICE/SHORT RESIDENCE DATE: JANUARY 6, 1988

LOCATION	QUANTITY	DESCRIPTION
OFFICE	1	13mm SOCKET, 1/4 INCH DRIVE
OFFICE	1	13mm SOCKET,LONG,1/4 INCH DRIVE
OFFICE	2	5/32 SOCKET,1/4 INCH DRIVE
OFFICE	3	3/16 SOCKET,1/4 INCH DRIVE
OFFICE	4	7/32 SOCKET,1/4 INCH DRIVE
OFFICE	4	1/4 SOCKET,1/4 INCH DRIVE
OFFICE	4	9/32 SOCKET,1/4 INCH DRIVE
OFFICE	4	5/16 SOCKET,1/4 INCH DRIVE
OFFICE	2	5/16 SOCKET,LONG,1/4 INCH DRIVE
OFFICE	4	11/32 SOCKET,1/4 INCH DRIVE
OFFICE	1	11/32 SOCKET,LONG,1/4 INCH DRIVE
OFFICE	3	3/8 SOCKET,1/4 INCH DRIVE
OFFICE	2	3/8 SOCKET,LONG,1/4 INCH DRIVE
OFFICE	6	3/8 SOCKET,3/8 INCH DRIVE
OFFICE	3	7/16 SOCKET,1/4 INCH DRIVE
OFFICE	2	7/16 SOCKET,LONG,1/4 INCH DRIVE
OFFICE	6	7/16 SOCKET,3/8 INCH DRIVE
OFFICE	4	1/2 SOCKET,1/4 INCH DRIVE
OFFICE	2	1/2 SOCKET,LONG,1/4 INCH DRIVE
OFFICE	6	1/2 SOCKET,3/8 INCH DRIVE
OFFICE	2	1/2 SOCKET,LONG,3/8 INCH DRIVE
OFFICE	2	1/2 SOCKET,1/2 INCH DRIVE
OFFICE	3	9/16 SOCKET,3/8 INCH DRIVE
OFFICE	2	9/16 SOCKET,LONG,3/8 INCH DRIVE
OFFICE	2	9/16 SOCKET,1/2 INCH DRIVE
OFFICE	4	5/8 SOCKET,3/8 INCH DRIVE
OFFICE	2	5/8 SOCKET,LONG,3/8 INCH DRIVE
OFFICE	2	5/8 SPARK PLUG SOCKET,3/8 INCH DRIVE
OFFICE	2	5/8 SOCKET,1/2 INCH DRIVE
OFFICE	4	11/16 SOCKET,3/8 INCH DRIVE
OFFICE	2	11/16 SOCKET,LONG,3/8 INCH DRIVE
OFFICE	2	11/16 SOCKET,1/2 INCH DRIVE
OFFICE	4	3/4 SOCKET,3/8 INCH DRIVE

PROPERTY INVENTORY PAGE 24 OF 24

DYNAMAC INTERNATIONAL BAMAKO FIELD OFFICE

CATEGORY: OFFICE/SHORT RESIDENCE DATE: JANUARY 6, 1988

LOCATION	QUANTITY	DESCRIPTION
OFFICE	2	3/4 SOCKET,LONG,3/8 INCH DRIVE
OFFICE	2	3/4 SOCKET,1/2 INCH DRIVE
OFFICE	4	13/16 SOCKET,3/8 INCH DRIVE
OFFICE	2	13/16 SOCKET,1/2 INCH DRIVE
OFFICE	2	7/8 SOCKET,1/2 INCH DRIVE
OFFICE	1	6-PIECE SET CRAFTSMAN ALLEN WRENCHES
OFFICE	1	1/2 INCH WRENCH
OFFICE	1	3/8 INCH WRENCH
OFFICE	1	9/16 WRENCH
OFFICE	1	MACHETE
OFFICE	-	ASSORTED OFFICE SUPPLIES