PB-AAX-673
55688

NATIONAL RESEARCH CENTRE

APPLIED SCIENCE AND TECHNOLOGY PROJECT

(Project No. 263-0016)

Demonstration Subproject

(Academy of Scientific Research and Technology)

THE DEVELOPMENT AND APPLICATION OF BIOGAS TECHNOLOGY IN RURAL AREAS OF EGYPT

SUMMARY STATUS REPORT

Submitted to th JCC

by

Prof. Dr. M.M. El-Halwagi
Principal Investigator

October 1985

BACKGROUND AND OBJECTIVE

Since the mid-seventies, the National Research Centre (NRC) initiated laboratory activities in the field of anaerobic digestion of organic wastes. Concurrently, a full-fledged multidisciplinary program was being carefully planned. Near the end of 1978, these endeavors culminated in the formulation and the formal inauguration of a national R & D and demonstration project for the development and application of village type biogas technology (BGT). The project is managed by the NRC under the auspices of the Egyptian Academy of Scientific Research and Technology (ASRT) and is financially supported by the USAID.

The overall objective of the project is to demonstrate on the basis of an integrated R & D as well as technology transfer program, that the application of biogas technology is technically feasible, socially acceptable and economically viable in rural areas of Egypt; and to lay the foundation for subsequent wide-spread implementation on the national scale. The project is executed by an interdisciplinary team of scientists, engineers and sociologists.

THE PRELIMINARY FACT-FINDING PHASE

The project started with a short fact-finding phase in which the BGT state of the art was assessed. An Asian study tour was conducted in China, India and Thailand. Socio-economic surveys of typical Egyptian villages were undertaken. Two villages representing traditional and new-planned types were selected for field demonstration. El-Manawat village represents the traditional one, whereas Omar Makram village represents the new-planned type. Later on, a third village-named Shubra Kass - has been selected to demonstrate large-scale biogas system servicing a poultry rearing operation. This last particular site was carufully selected where more than 800 poultry houses exist.

OUTLINE OF THE R & D ACTIVITIES

The second phase of the project, encompassed extensive R & D endeavours. Considerable digestibility research work was done to determine optimum conditions conducive to greater efficiency, highest pathogens destruction rate and diminishing the effect of toxic and inhibitory materials particularly those pesticides and herbicides that may contaminate the agricultural feedstocks. Various substrates including cow dung, night soil and agricultural wastes (weeds, water hyacinth, maize and cotton stalks) were investigated at different mixing ratios, organic loadings and temperatures. Certain pretreatments including pre-composting were also examined. Laboratory research was as well conducted on two relevant problems namely the selective inhibition of hydrogen sulphide and destruction of ova and embryos of Ascaris. A sizable portion of work was done on the evaluation of digested products as fertilizer and soil conditioner as well as their handling, storage and application.

The engineering and development work was directed towards design, construction, testing and operation of different prototype digesters, as well as development of local appropriate digesters that were constructed, tested and operated at the NRC extension area. Performance characteristics of these digesters were determined in terms of gas production rate, gas composition and their relation to the effect of pressure and temperature inside the digester as well as the effect of ambient temperature. The rate of destruction of parasites and pathogens was also followed. Internal mixing patterns were determined by measuring the residence time distribution.

As a result, designs suitable for local village conditions could be proposed for field demonstration. These included some modifications of the conventional Chinesee and Indian designs, together with development of new designs that may alleviate the major shortcomings of the available technologies under local conditions. These developments encompass:

1. Dry-type fermenter capable of digesting cellulosic wastes. This will solve the problem for families having limited mumber of cattle.

2. Horizontal tunnel or tubular-type digester that can solve the problem of the high water table in many localities.
3. Solar-heated digester either through heating the feed water or by creating the green-house effect in order to solve the problem of low gas productivity due to low temperature, particularly during winter.

With regard to the gas-use devices, extensive work was directed toward development of appropriate devices. These include, household burners and stoves both simple and modern, gas lamps, space heaters, refrigeration cooling, and conversion of petrol engines to work on biogas. Performance of these devices was also tested.

THE DEMONSTRATION PHASE

The third phase is the village demonstration, which is the central focus of the whole project. The purpose here is to introduce the BGT to the peasant on a concrete level through full-scale demonstration so as to convince him with its adoption and identify his point of view regarding its applicability and scale. It was planned to conduct the demonstration in two types of villages: traditional and new-planned. These demonstrations are to be followed up and evaluated to assess their viability, social and environmental impacts, and to identify the optimum course of action for possible implementation on the national scale.

Prior to village demonstration, some family-size proto-type digesters were installed at the demonstration area of the NRC. Three prototypes have been constructed. The first (Figure 1) is a fixed roof 10 m^3 rectangular digester of the water-pressure Chinese design. The second (Figure 2) is a 6 m^3 cylindrical domed-roof Chinese digester. The third prototype unit (Figure 3) is a new adapted design combining the features of both plug-flow and Indian movable cap type. Provisions for solar heating of feed water, composting of the digester effluent on the top of the plug flow part, and attachment of a latrine and animal shed were incorporated is this last unit.

The implementation of the village demonstration program at Al-Manawat started since March 1980. Two family size digesters 10 m^3 each were first installed. The first (Figure 4) is a modified Indian type and is attached directly to the animal shed and the latrine of the farmer house. The second (Figure 5) is an improved version of the cylindrical wide and shallow Chinese design installed within the premises of the village collective services unit. Both have been properly functioning ever-since. Technical, social and economic features are monitored on a continuous basis.

The continued manifestation of the field demonstration success in Manawat has motivated a number of village residents to adopt the technology and request constructing digesters for their own use while bearing a part (25%) of its investment cost. Three new units have been recently installed, all of which are either completely novel or have novel design features. The first is a 10 m^3 BORDA-type digester (Figure 6), the second is a 6 m^3 improved Chinese-type digester in which novel construction techniques and internal flow patterns are introduced (Figure 7), and the third is a 13 m^3 new type of a horizontal plug flow digester with a pyramid-shape roof and a floating gas holder (Figure 8).

Omar Makram village demonstration started in the early part of 1982. Three family - scale digesters were installed for the use of four families (Figures 9-11). The first two are of the Indian type, but one of them is shared by two house-holds as a pilot experiment of communal-sharing facilities. The third unit is of the Chinese type, but built by almost purely native Egyptian technology particularly with regard to the dome section of the unit. All the three units have been operating very well and their performance is being followed on regular basis. However, some social troubles have been raised for the pilot communal unit.

Controlled comparative field demonstrations of various fertilizers and combinations including inorganic fertilizers, farm yard manure and digester effluent manifested the supremacy of the latter.

A large-scale biogas plant (Figure 12) has been installed in May 1982 at a third village called Shubra Kass where a 50 m^3 biogas plant is attached to a poultry far. The objective here is to demonstrate and assess the viability of locally introducing a wholly

desi[illegible] and implementation [illegible] system to a poultry rearing operation. The demonstration site has been carefully selected, since in that particular area, more than 800 similar poultry houses exist. The biogas produced is used to warm up the chicks in the farm. The plant can supply the farm with a considerable portion of its energy needs and overcomes the troubles that frequently exist fron non available butane gas bottles. Moreover, it recycles the poultry droppings and hence alleviates pollution and disease transfer.

A specially designed tunnel-type digester with arched roof has been constructed with a separated floating gas collection system. The digester was provided with mechanical mixing rods which did not prove effective, and a gas and slurry recirculation systems were added to provide more efficient means of mixing and scum-breaking. Heating is provided by circulating hot water through a tube bundle immersed in the digester. In the initial plant the water was to be heated by burning 10-15 m^3 of biogas per day in a gas water heater. Subsequently, a 4 kVA Honda gasoline engine - generator was modified to operate on biogas. The power is to be used for illumination in the poultry house and for other electrical equipment at the site. Water is heated in a specially-designed heat exchanger around the engines exhaust. The device proved to be very effective and the hot water is now used for slurry mixing and digester heating. Heat loss from the digester was reduced by enclosing the digester in a plastic greenhouse. Through these modifications, the productivity of the unit is now estimated between 1 to 1.2 m^3 biogas/m^3/day.

A large biogas unit has been recently designed for the Aluminium Company of Egypt and will be implemented shortly. The feed to the unit will be mainly the cow-dung collected from about 500 cows and calves of one of the animal sheds owned by the company. The gas will be supplied to a nearby housing complex belonging to the company, while the effluent will be used for desert-land reclamation. The unit will be of the plug-flow type with a separate floating gas-holder. Its size is around 320 m^3 and is estimated to be capable of producing gas sufficient for about 200 households. The unit will be highly mechanized. It will use slurry pumps for feeding, as well as heating by both passive solar means and biogas combustion for controlling the digestion temperature. The layout and a sectional view of the digester are shown in Figures 13 and 14.

Agreements have been signed with Assiut and Menia Universities for joint cooperation wherein the initial stages will be led by the NRC team. A third agreement is being negotiated with AlAzhar university.

Proceedings of the International Conference organized las November have been reviewed and edited. Agreement has been reached to publish them by ElSevier as a book edited by the Principal Investigator of this project in the very near future.

FUTURE PLANS

The National Research Centre in its capacity as the largest national R & D organization and the single multidisciplinary institution in Egypt is planning to continue with target-oriented development endeavors relevant to BGT within the wider context of a full-fledged biomass energy, resource recovery and recycling program.

Over the short-term of a two-years span, emphasis will be on:

(1) Appraisal of the designs already implemented by the NRC and perfection of those most promising under local conditions.

(2) Development work on two new digesters that have good prospects in coping with the two major constraints of lack of space and insufficient number of animals. The first is a solar-heated above-ground small-size digester; and the second is a version of what is called a "dry-fermenter" that would be fed principally with agricultural residues.

(3) Erection and performance assessment of the large-scale biogas plant to be attached to Misr Aluminium Company animal rearing operations.

(4) Completion of the NRC site for the "Integrated Biomass Utilization Technologies Program". This site will cover development work, demonstration, training and extension activities. The program encompasses:

- o Integrated biogas system embodying: several types of digesters, an animal shed, a fish pond, a green-house, and sepecialized laboratory for developing appropiate biogas-use devices.
- o Development of improved biomass-burning stoves and ovens. Three designs have already been developed.
- o Development of portable biomass gasification units.

- Municipal solid waste composting systems. A pilot plant for mechanized composting has already been tested as a result of joint cooperation with a British firm (DAD).

CONCLUSIONS

1. Field demonstrations manifested the technical feasibility of appropriately designed and installed rural biogas systems. Implementation and operation could be managed with local resources, most of which can be accessible within the village setting itself.
2. There are positive indicators of the social acceptability of the rural biogas systems if they are properly demonstrated. Benefits of the system are readily visible and perceptible, particularly when it comes to the improvements in the general sanitation level and quality of life.
3. Despite the relatively high initial investment cost, the system can become economically viable if applied to the appropriate situations and all the tangible benefits are optimally realized. These benefits should include those accrued from the fuel gas, the organic fertilizer and the sanitary disposal of wastes.
4. Presently available designs for household units mandate for their viability, the fulfillment of two prerequisites:
   (1) Sufficient space within the house premises for erecting the biogas plant including ancillary treatments.
   (2) Ownership of at least four large animals.
5. Large units attached to animal rearing operations sould be relatively mechanised and preferably heated.
6- Wide-spread propagation of BGT in the Egyptian rural areas necessitates development of modified and new designs that provide for:
   (1) Large-scale prefabrication of whole units or parts of, to reduce costs and alleviate leakage and other construction problems resulting from poor workmanship that can exist under village conditions.
   (2) Relatively shallow underground structure in order to avoid the problem of the prevailing high water-table.
   (3) An appropriate heating system to raise gas productivity particularly during winter.

ssibility of using agricultural residues in case of insufficient manure substrate.

(b) Minimum space requirement.

7. On the basis of the presently accessible technologies, it is estimated that there are good prospects for installing around 400,000 units all over rural Egypt provided that proper institutional infrastructure is developed and serious endeavors at all levels are undertaken. We believe that we should not "GO BIOGAS UNLESS WE ARE VERY SURE AND EXTREMELY SERIOUS".

8. BGT prospects can be stretched of novel designs can be developed in such a way to relax the major constraints of lack of space and insufficient animals. The NRC program emphasizes this important concept in its future engineering development work.

9. Government support, specially in terms of financial incentives, grants and soft loans are indispensable for the propagation of BGT, particularly under the existing highly subsidized fuel pricing structure.

A LIST OF THE PILOT PERSONNEL

o Principal Investigator: Prof. Dr. Eng. M.M. ElHalwagi
Head of the Pilot Plant Laboratory, and
Coordinator of the Biomass Utilization
Program,

o Engineering Group (Pilot Plant Laboratory)

1- Prof. Dr. Eng. A.M. Abdel Dayem
2- Prof. Dr. Eng. M.A. Hamad

o Pollution Contrl Laboratory (PCL)

1- Prof. Dr. F.A. ElGohary, Head of PCL.
2- Dr. M.M. ElAbagy
3- Dr. S.ElHawaary
4- Dr. H.T. ElZanfaly
5- Dr. F. Nasr
6- Dr. O.A. Ali

o Fertilizer Evaluation Group (Soil Microbiology Laboratory)

1- Prof. Dr. H. Moawad
2- Prof. Dr. L.I. Zohdy
3- Dr. S. Badr ElDin
4- Dr. M. Khalafallah
5- Dr. H. Abdel Maksoud.

o Parasitology Group (Animal Diseases Laboratory)

1- Prof. Dr. M.A. Tawfik
2- Dr. M.A. Hassanain
3- Dr. N.S. Deghidy
4- Dr. A.G. Hegazi
5. Dr. H. Soufy
6- Dr. L. Ali

o Fundamental Microbiology Group (Microbiological Chemistry Laboratory)

1- Dr. M. ElDin Abdel-Samie

2- M.N. Mahmoud

o Digestibility Studies & Analytical Services (Pilot Plant Laboratory)

1- Dr. Sh. I.ElShawarby
2- Dr. S.Y. ELAfifi
3- Dr. E. ElZanaty

A LIST OF REN PROJECT PUBLICATIONS

In addition to the project basic document, and 18 semi-annual progress and status reports, the following papers were published.

1. M.M. ElHalwagi
   Development and application of Biogas Technology for rural areas of Egypt.
   Pub. in Proc. Bio-Energy'80, World Congress and exposition, April 21-24 1980, Atlanta, Georgia, U.S.A(P446-447).

2. M.M. ElHalwagi, A.M. Abdel Dayem
   Biogas generation from animal and agricultural wastes in Africa. Paper prepared upon request of the Economic Commission of Africa, Energy Resources Unit, Panel of experts on Biomass, Oct, 1980.

3. A.M. Abdel Dayem and M.A. Hamad,
   Design and operation of small biogas plants.
   Proc. 3rd Miami Inter, Conf. on Alternative energy sources, 15-17 Dec. 1980, Miami, U.S.A.

4. M.M. ElHalwagi
   Pilot Demonstration of biogas technology in rural areas of Egypt.
   Proc. of National seminar on biogas technology July 9-11, 1981 India.

5. M.M. ElHalwagi, M.A. Hamad and A.M. Abdel Dayem.
   Prefeasibility study on biogas technology in rural areas of Egypt.
   Conf. on Energy Conservation and Utilization, Cairo, Nov. (1981) (IN ARABIC).

6. F.El-Gohary and F. Nasr,
   Bioconversion of organic wastes, 4th Inter. Conf. on alternative energy sources, Miami, Fl., 1981.

7. M.A. Hamad, M.M. ElHalwagi.
   The expected role of biogas technology in rural areas of Egypt, Energy considerations.
   4th Miami International Conference on alternative energy sources, 1981, Miami, U.S.A.

8. Biogas technology in Rural Areas.
   Bioenergy Directory 1981.

9. [illegible] Abdel Dayem, M.A. Hamad.
[illegible] for rural [illegible] Egypt
Proc. of the First OAU/STRC Inter-African Conf. on Bio-fertilizers, Cairo, March, 1982.

10. M.M. ElHalwagi, A.M. Abdel Dayem, M.A. Hamad.
Village Demonstration of biogas technology.
An Egyptian case study,
Proc. of IGT 6th meeting on Energy from Biomass and Wastes.
Jan. 1982. (Also published in Natural Resources FORUM, Vol.6 No.4, October 1982)

11. M.A. Hamad, A.M. Abdel Dayem, M.M. ElHalwagi
Rural biogas technology: Effect of digester pressure on gas rate and composition.
J.Eng. and applied science 3 (1), 49 (1983).

12. Performance evaluation of two rural biogas units of the Indian and Chinese Versions.
M.A. Hamad, A.M. Abdel Dayem, M.M. ElHalwagi
J.Energy in Agriculture 1,235 (1983).

13. A report entitled "Biogas Technology and its prospects in the context of rural Sanitation", Compiled within progress Report 2 of the Project "Appropriate Water Supply and Sanitation Technologies for small Egyptian Rural Communities", (FRCU GRANT NO. 82024 - Cairo University, Faculty of Engineering), September 1983.

14. Zohdy, L.I., Badr El-Din, S.M.S., Khalafallah, M.A. and Abdel Maksoud, H.K. (1982).
Follow up the fermentation progress in the digested slurry of biogas digester from the standpont of its fertilizing value, Egypt.J. Microbiol. (in press).

15. Zohdy, L.I. Badr El-Din, S.M.S. and Khalafallah, M.A. (1982).
Handling and storage of digested slurry produced from the biogas digester.
Egypt. J.Microbiol. (in press).

16. Zohdy, L.I. and Badr El-Din, SM.S. (1982).
Comparison of biogas slurry treatments.
I. On the biological and chemical properties of a virgin sandy soil cultivated with wheat.
Egypt. J. Microbiol. (in press).

17. [illegible] (1982)
[illegible]
II. On the wheat [illegible] and phosphorus uptake and nitrogen balance in a virgin sandy soil.
Egypt. J. Microbiol (in press).

18. S.El-Hawaary, M.M. El-Abagi and N.A. Neweigy, "Effect of Biogas on the Survival of Faecal Indicators and Salmonella Typhimurium", Research Bulletin 1604, Faculty of Agriculture, Ain Shams University, October 1981.

19. M.M. El-Abagy, S.El-Hawaary, and M.A. Abou-ElAzm, "Survival of Bacterial Indicators and Salmonella Typhimurium During Methanogenesis", Bulletin of the NRC.

20. M.M. ElHalwagi, A.M. Abdel Dayem, M.A. Hamad, "Design and Construction of new type of Digester attached to an Egyptian Poultry Farm", Third International Symposium on Anaerobic Digestion, Boston, U.S.A. 1983.

21. M.M. ElHalwagi, A.M. Abdel Dayem, and M.A. Hamad, "Utilization of Agricultural Village Wastes for Energy Generation and Fertilizer Production", 15th International Seminar, Egyptian Society for Packaging Nov. 1983 (In Arabic).

22. M.M. ElHalwagi, M.A. Hamad and A.M. Abdel Dayem, "Development of Biomass Energy Technologies for Rural Areas of Egypt: The National Research Centre Programme", INRESA WORKSHOP, Egypt, March 25-29, 1984.

23. M.M. ElHalwagi, "Status and Prospects of Biomass Energy in Egypt," BioCycle, May/June 1984.

24. M.M. ElHalwagi, M.A. Hamad, and A.M. Abdel Dayem, "A Pilot Experiment for Cooperative Community Biogas Facilities in Rural Egypt Indicated Social Failure", The International Biogas Workshop on Community Plants, Bremen, Fed. Rep. Germany 14-19 May 1984.

25. M.M. ElHalwagi, M.A. Hamad, and A.M. Abdel Dayem, "Cost-Benefit Analysis of Rural Biogas Systems in terms of their Impacts as Agents of Socio-Economic Change", BioEnergy'84, Gothenburg, Sweden, June 18-21, 1984.

26. M.M. ElHalwagi, S.I. ElShawarby, N.A. Shaaban and F.ElGohary, "Methane Production by Anaerobic Digestion of Poultry Droppings: Experimental, Theoretical and Design Aspects", 8th International Congress CHISA'84, Prague, Czechoslovakis.

27. M.M. ElHalwagi, [illegible] Biogas Technology, Transfer and Diffusion - Introduction and Overview, Cairo International Biogas Conference, November 1984.

28. M.M. ElHalwagi, "Force-Field Analysis of Biogas Systems and Proposed Means for Optimizing their Prospects", ibid, November 1984.

29. M.A. Hamad, A.M. Abdel Dayem, and M.M. ElHalwagi, "Design Parameters Affecting Success and Failure of Biogas Systems", ibid, November 1984.

30. S.I. ElShawarby, N.A. Shaaban, F.ElGohary and M.M. ElHalwagi, "Study of the Optimum Operating Conditions for the Anaerobic Digestion of some Organic Wastes", ibid, November 1984.

31. H.R. Capener and M.M. ElHalwagi, "Social, Ecological, and Cultural Realities of Biogas Systems Development", ibid, November 1984.

32. M.M. ElHalwagi, A.M. Abdel Dayem and M.A.Hamad, "Development and Application of Biogas Technology for Rural Areas of Egypt - The National Research Centre Project", ibid, November 1984.

33. M.M. ElHalwagi, "Assessment of the Feasibility of Rural Biogas Systems", ibid, November 1984.

34. M.A. Tawfik, "Health Risks Associated with the Use of Slurry", ibid November 1984.

35. M.A. Tawfik, A.G. Hegazi, H.Soufy and L.Ali, "Incidence, Persistence and Control of some Pathogens During Anaerobic Digestion of Organic Wastes", ibid, November 1984.

36. M.A. Tawfik, M.A. Hassanain and N.S. Deghidy, "Incidence, Persistence and Control of Parasitic Eggs and Cysts in Anaerobically Digested Wastes", ibid, November 1984.

37. M.M. ElAbagy, S.ElHawaary, H.T. ElZanfaly, and F.Nasr, "Health Aspects of Energy Production from Biomass", ibid November 1984.

38. M.ElDin Abdel-Samie, "The Assessment of Methanogenic Activities by the Determination of Coenzyme F_{420}", ibid November 1983.

39. H.Moawad, L.I.Zohdy, SiBadr ElDin, M.Khalafallah and H.Abdel Maksoud, "Assessment of Anaerobically Digested Slurry as a Fertilizer and soil Conditioner", ibid November 1984.

[illegible] "[illegible] Slurry and Other Ma[illegible] Virgin Sand and [illegible]", ibid, November 1984.

41. F. ElGohary, F.Nasr and O.A.Ali, "The Toxicity Effect of Pesticides on the Anaerobic Digestion Process", ibid, November 1984.

42. M.ElDin Abdel-Samie and M.N. Mahmoud, "The Assessment of Cellulolytic Activities by the "Textile Coupon" Technique", ibid, November 1984.

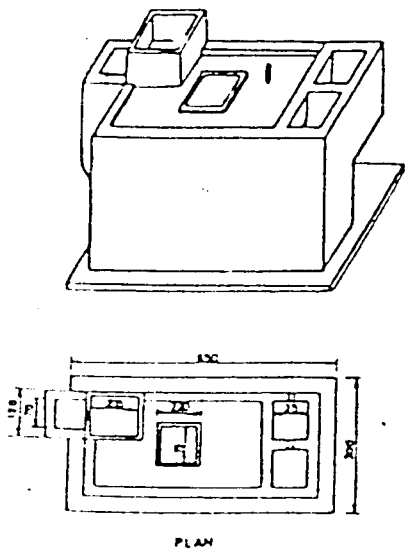

Figure 1 Rectangular Type Chinese Digester

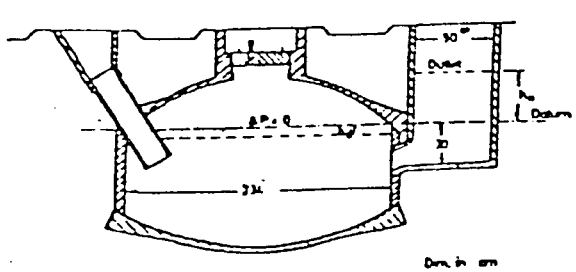

Figure 2 The Chinese Type Digester (5 m^3)

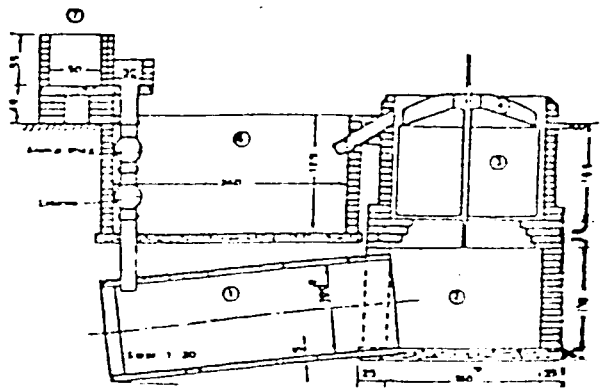

1- Horizontal Part
2- Vertical Part
3- Gas Holder
4- Solar Heater
5- Effluent pipe
6- Effluent Storage Reservoir
7- Feed Mixing Chamber

Figure 3 The Modified Indian (horizontal-Vertical) Prototype Digester.

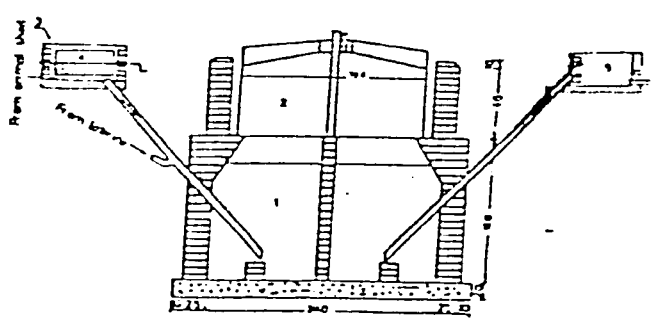

1- Digester
2- Gas Holder
3- Feed Mixing Chamber
4- Feed Mixer
5- Effluent Chamber

Figure 4 The Modified Indian Type Digester

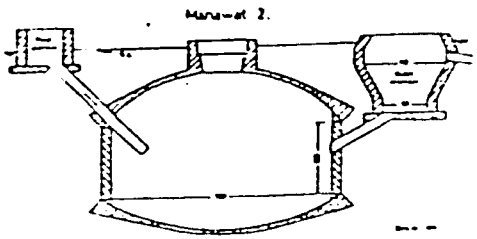

Figure 5 Manawat Modified Chinese Type digester (10 m^3).

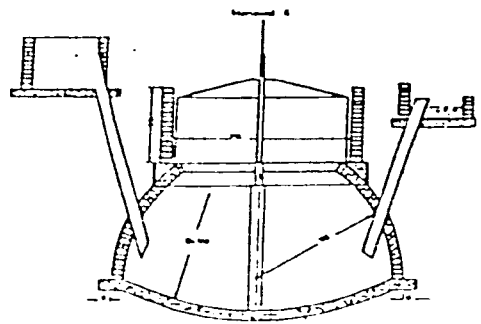

Figure 7 Modified Two-Chamber Borda Type Digester (Maroof-Meet Kados).

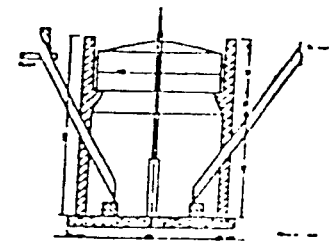

Figure 9 Omar Makram Modified Indian Type Digester (5 m^3)

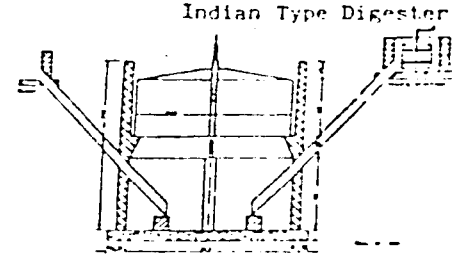

Figure 10 Omar Makram Pilot Communal Unit of the Modified Inidan Type.

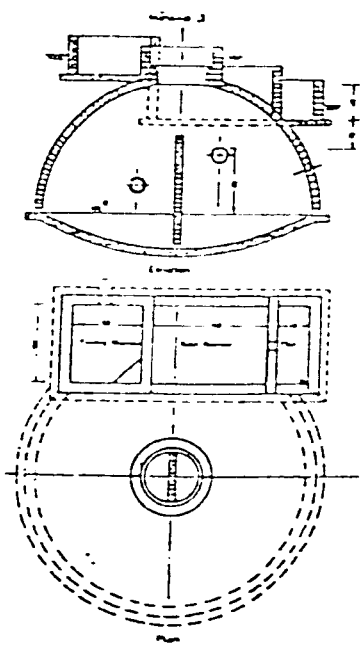

Figure 6 Egyptian-Chinese

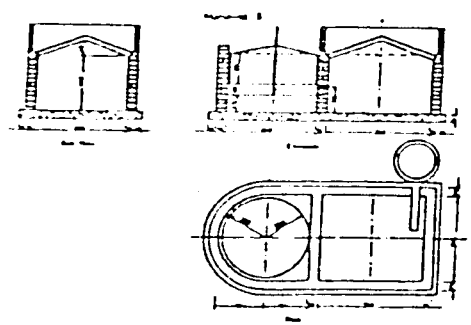

Figure 8 Two-Chamber Tunnel-Type Digester (Rahman-Meet Kados).

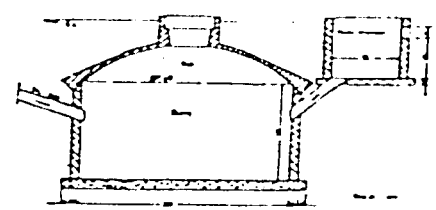

Figure 11 Omar Makram Modified Chinese Type Digester (9 m^3)

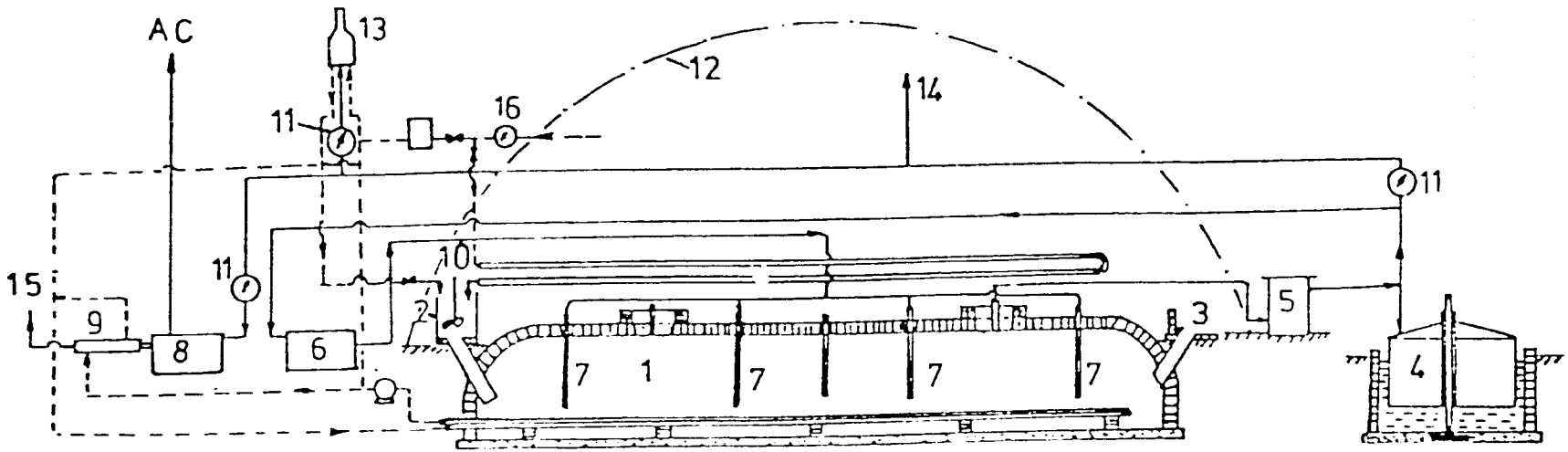

1- Tunnel digester
2- Feed chamber
3- Effluent outlet
4- Gasholder
5- Gas Scrubber
6- Gas Compressor
7- Gas mixing distributors
8- Electrical power generator
9- Engine waste-heat recycle
10- Solar water heater
11- Gas meters
12- Greenhouse
13- Gas heater
14- Main biogas line
15- Flue gases
16- Water meter

Figure 12 The 50 m^3 Tunnel Type Digester (Shubrakass Village)

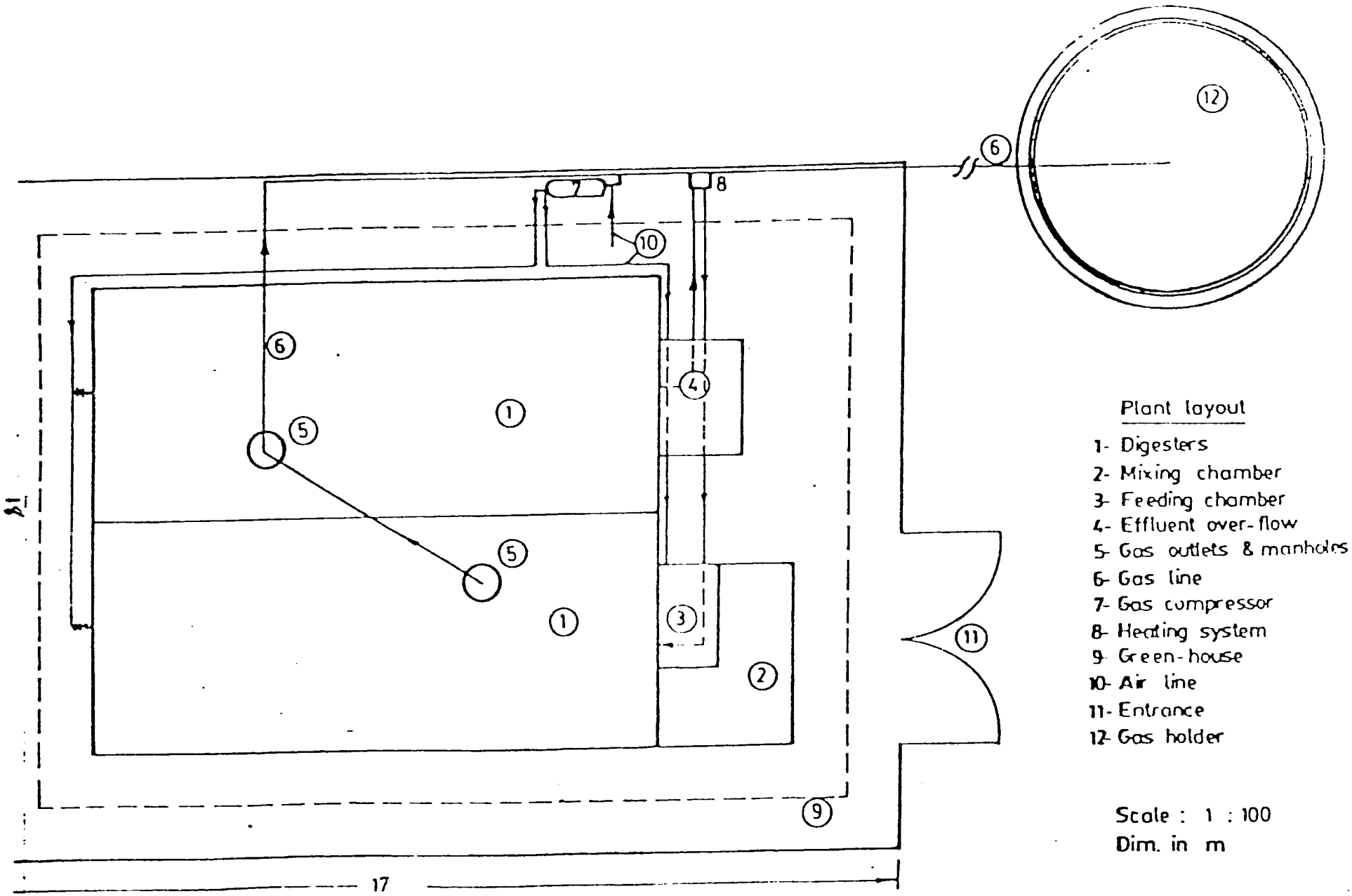

Fig. 13 . Biogas Plant Layout .

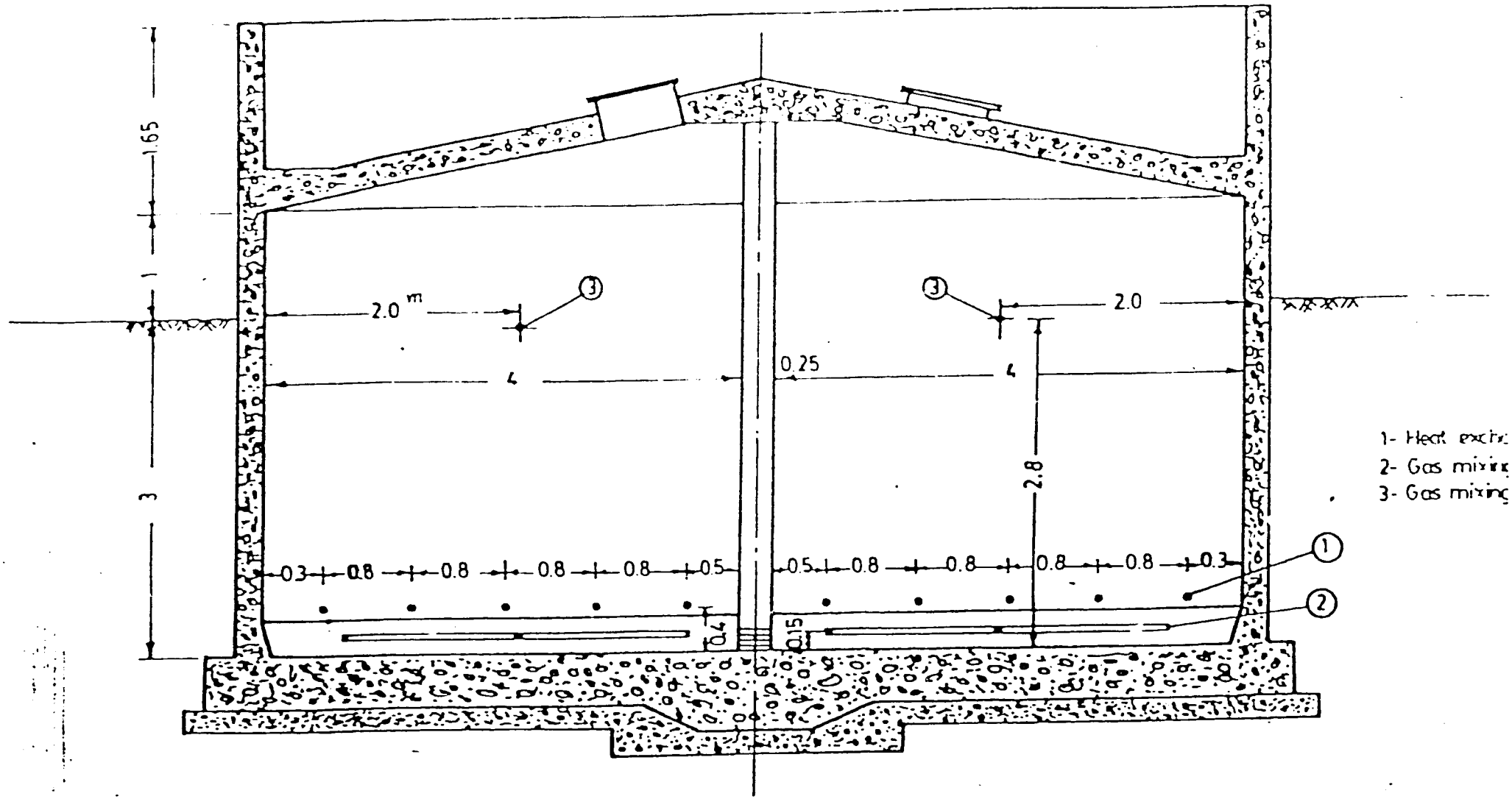

Fig.14 . Elevation of digester-heat exchanger and gas mixing net .