PD-AAX-664

National Research Centre

APPLIED SCIENCE AND TECHNOLOGY PROJECT
(PROJECT NO. 263-0016)

DEMONSTRATION SUB-PROJECT
(ACADEMY OF SCIENTIFIC RESEARCH AND TECHNOLOGY)

THE DEVELOPMENT AND APPLICATION OF BIOGAS TECHNOLOGY IN RURAL AREAS OF EGYPT

SEVENTH TECHNICAL PROGRESS REPORT (PR/7T)

BY
PROF. DR. M.M.EL HALWAGI
PRINCIPAL INVESTIGATOR

OCTOBER 1982

1. Introduction

This 'technical' progress report supplements the summary progress report (PR/7-October 1982) submitted to the JCC. It covers the period from October 1981 to September 1982, with particular emphasis on the last six months.

The work of each of the project groups is described and proposed future plans are as well presented. An outline is given and is complemented with detailed annexes.

2. The Engineering Group

The work of this group covers:

a. Promotional endeavors. These are touched upon in the JCC progress report (PR/7).

b. Field demonstration of the biogas technology and assessment of their impacts and other relevant aspects. Their activities in Omar Makram, the newer demonstration village, are described in Annex 1. By April 1982, 3 new family-type units were installed and operated successfully. One of them is shared by two families.

The highlights of the follow-up work relating to AlManawat demonstration units are outlined in Annex 2.

c. Carry out development work and evaluate the technical performance of operating prototypes at the NRC site. Annex 3 entitled 'modification of the Chinese-type digester' describes modifications introduced to improve the performance of the popular Chinese shallow and wide cylindrical model that has evolved from a systematic investigation of the effect of operating pressure.

Annex 4 is concerned with the performance evaluation of 2 prototypes (Chinese and Plug-flow/Indian) on a comparative basis, both of which were operated at the NRC extension area.

The materials covered in Annexes 3 and 4 will be published in the very near future as:

1. "Rural biogas technology: Effect of digester pressure on gas rate and Composition", J.Eng. and Applied Sci., 1982.
2. "Performance evaluation of two rural biogas units of the Indian and Chinese Versions," J.Energy in Agriculture, 1982.

Future Plans

1. Follow-up of the operating digesters at the NRC site as well as the demonstrations villages.
2. Development of the NRC site.
3. Construction of 2 to 3 family size digesters.
4. Design & construction of a large scale digestion unit with heating facilities.

3. The Fertilizer Evaluation Group

The work of this group over the past year centered on field experimentation at AlManawat village whereby the digested slurry adsorped on equal amount of silty soil was evaluated versus other mineral, organic and biofertilizers. Nine treatments were employed and their effect on wheat yield and the uptake of different plant nutrients were assessed. Details are given in Annex 5.

The treatments embodied: Untreated check plots; NPK, i.e. urea-superphosphate-potassium sulphate (100:100:50 kg); biogas fertilizer (digested slurry + equal amount of silt) at two rates of 5 and 20 tons/feddan; and farm yard manure at 20 tons/feddan. In addition, nitrogen fixing Azospirillum lipoferum was included in the study. The experiments were conducted using the complete randomized plots very close to the site of the family-size digester (the Indian type). Treatments were replicated four times and the results were statistically analyzed.

Soil and plant samples were collected periodically for chemical and microbiological analysis. At the time of harvest, the yield of seeds and straw was recorded. Nutrients uptake was determined by

analyzing the seed yield and the straw for N,P,K,Fe,Mn,Zn and Cu.

Results indicated that 5 t/feddan of biogas fertilizer is almost equivalent to 20 t/feddan of farm yard manure; whereas 20 t/feddan of biogas fertilizer give approximately the same yield as the NPK treatment. However, the addition of 20 t/feddan of biogas fertilizer increased the P,Fe,Mn, and Cu uptake significantly than did 20 t/feddan farm yard manure, 5 t/feddan biogas fertilizer or the NPK treatment.

Future Plans Over the coming two years will center on an extended evaluation of digested slurry under laboratory-controlled conditions (Pot tests) as well as field experiments in order to assess in particular the long term residual effect of the fertilizer.

4. The Parasitology Group

This group has joined the project team since the second half of 1981. The principal objective of the group is the selective inhibition of the viability and infectivity of ova and other resistant stages of parasitic helminths and intestinal protozoa commonly found in human and animal excreta which are used as feed material to biogas plants. These include the eggs of *Ascaris*, *Toxocara*, *Trichuris* and *Ancylostoma* and oocysts of *Eimeria sp.*, *Isospora sp.* and *Toxoplasma*.

The group work centered on two aspects:

1. Isolation and identification of the most prevailing eggs and oocysts present in the field digesters slurry before and after the anaerobic digestion.
2. Study of the effect of some physical and chemical conditions on the viability and infectivity of *Toxocara vitulorum* eggs.

The highlights of the results may be summarized in the following:

a. Only *Ascaris* eggs could resist the anaerobic digestion process in the Manawat (Indian) digester. The number of the recovered eggs was reduced to about 66%.

b. Concerning the effect of some physical and chemical conditions on the development of T. Vitulorum eggs, it was found that:

- Though 26-28 C is the optimum temperature, it could withstand low temperature till 4 C and high temperature below 37 C.
- Dessication was destructive for both embryonated and non-embryonated eggs.
- Neither light nor darkness had any effect on their development.
- Immersion of eggs in previously boiled water at various depths showed declining degrees of development.
- Disinfectants has an ovicidal effect.
- Acids, alkali, insecticides, antihelmintic and inorganic fertilizers used exhibited no influence on the development of T. Vitulorum eggs.

Details of this work are presented in Annex 6.

Future Plans will encompass:

a. Follow-up of operating village digesters for the purpose of studying the effect of digestion on the viability of ova of parasitic worms and the cysts of protozoa that may be present.

b. Conduct laboratory-controlled investigations to assess the effect of certain important variables and treatments. These will include temperature, time, disinfectants and post composting. This work will center on the following parasites and pathogens concurrently and under the same conditions: Ascaris, Hook worms, oocysts; salmonella, shigella; and Colestridea.

5. Pollution Control and Laboratory-scale digestibility studies

The progress report of this group over the period from October 1981 till March 1982 is given in Annex 7. No work was reported for the period April-September 1982 basically because of the inaccessability of antisera and antigens which are reordered for the fifth time since project inception. No future plans are set for this group till the

situation relating to the procurement of the antisera and antigens is clarified.

6. The Fundamental Microbiology Group

A brief progress report is given in Annex 8. Future plans are as well included. Future work will be more specific in nature and will build upon the extensive exploratory work previously conducted. This will be largely confined to investigating the possibility of increasing the rate of the anaerobic digestion process at low temperatures through the use of trace metal promoters.

7. The Biogas 'Central Services Laboratory' Group

This group is located within the Pilot Plant Laboratory of the NRC. It consists of two associate professors supervising all activities and four full time assisstants (Chemical engineers and Chemists), in addition to one technician and two laborers.

Their responsibilities embody: all laboratory preparatory activities prior to equipment installation, receiving the equipment and checking their constituents and spare parts, attending the installation with responsible agencies representatives and service men, learning the methods of operating the equipment and carryin the routine analyses required.

The whole group attended four specialized training courses in Cairo. The two laboratory supervisors will in the near future take advanced training in U.S.A.

Presently, all Phase I ordered equipment has arrived. These are housed in two adjacent laboratories in the Pilot Plant Laboratory building. The Gas cromatograph, Atomic Absorption spect., and the UV/visible spect. are all in perfect operation in the first laboratory.

Other equipment are currently either under installation or in the start-up phase of operation.

Over the period of August-September 1982 saveral analyses for 112 samples for the biogas project have been carried out. These included 700 atomic absorption measurements (for trace metals in the fertilization tests), 12 gas samples, and several UV spectrophotometry determinations.

Annex I

DEMONSTRATION WORK AT OMAR MAKRAM VILLAGE.

(Engineering Group)

Introduction:

Omar Makram village was selected as a new-planned village for biogas demonstration. A detailed sociological survey of this village was carried out by the sociological studies Group, and the results of this survey were presented in an ealier pragress report (PR/04).

It was decided to start the demonstration work in this village during this year (1982), in two stages. The first stage, is to construct and operate a specified number of family-size digesters linked to some properly selected houses.

This report presents the sequence and results of the demonstration work of the first stages, whereby three family size, digesters were constructed. One of these digesters was designed to serve two houses, and was intentionally made as a pilot experiment for the community type digester.

I. Preperation and orientation steps for the demonstration:

Although the sociological survey report served as a base of data and information on Omar Makram village, it was deemed necessary to reinvestigate and up-date the major technical and sociological information which are of direct relevance to the demonstration work. Furthermore, some orientation steps have to be taken. The main objectives of this preparatory stage were:

- To update basic information relevent to construction and demonstration work.
- To select suitable demonstration sites.
- To choose the appropriate type and size of the biogas plant.
- To test the attitude of the people with respect to the biogas technology.

Several visits were made to the village and intensive meetings were held with the village officials as well as some villagers. A number of houses were inspected and pertinent surveys were conducted to collect key technical and socio-economic information. The results evolving from this orientation phase can be outlined as follows:

1. With respect to the general structure of the village, considerable changes were noticed from the situation that prevailed during the preliminary visits in the year 1979 and as documented in the previous sociological report.

   As a new-planned village, the houses were originally designed as one floor buildings in the form of blocks that are separated from each other by wide-enough spaces. Houses were also furnished with a suitable sewage system. However, such an original structure has greatly changed. Most of the free spaces and wide streets surrounding the buildings have disappeared and used unofficially as normal housing extensions. Considerable part of the village sewer system was blocked and sanitary disposal becomes now a serious problem. Moreover, some of the houses developed into two floor buildings. In general, the orignial structure is tending to disappear and is reverting gradually to the conventional traditional village structure.

   The village population has increased considerably. The average family size has grown from about 5 to around 10 persons. Meanwhile, the cultivated area is still the same, with the average land holding of 5 feddans per family.

2. The attitude of the village people toward the implementation of the biogas technology was found to be very positive. The newspaper articles, radio and television programs covering the earlier demonstration experiment at AlManawat, was responsible to a great extent for such a positive attitude. Most of the people met during the visits were very willing to have biogas digesters. Similar positive attitude was prevailing among the official leaders of the village.

3. Apart from the noted increase in the averge family size, the socio-economic status of the village and of the individual families was found to be similar to that described before in the sociological report.

4. Through discussions with the Village leaders, it was found that labour needed for the project is available in the village, and enough skilled labour can be supplied through the south Tahrir Co, when the project is to be implemented on a large scale.

The average wages of the respective labour are as follows:

	L.E./day
Normal labour for excavation and general services	3.0
Brick-laying	12.0
Plastering	8.0
Concrete work	3.0

5. Most of the building materials needed for construction is not available directly in the village. Except for the sand and gravel which are widely available in the area, other materials are brought from the ontside, mainly from Menouf about (40 km.) or from Cairo. (about. 100 km.) Sand is available at no cost except transportation. Gravel can be supplied at 6 L.E./m^3, Cement at 35 L.E/ton (the official price) and 70 L.E./ton (free market price). Conventional red bricks are available at 40 L.E./1000 pieces. High quality red bricks (extruded) can be supplied from the factory near El-Bagour (about 60 km.) at 52 L.E./1000 pieces transportation.

II. Sites Selected for the demonstration.

For the purpose of a carefull selection of the demonstration sites, visits were paid to a number of prospective houses. These sites were carefully examined, and personal discussions were conducted with the householders to assess their attitudes toward the project and to what extent they can help in the success of the demonstration. All of the visited families showed great enthusiasm. They

indicated their readiness to receive visitors, to understand the technology and to transfer what they learn to the others.

Some important relevent data have been collected. These data are presented in Table 1. Also tests for the level of underground water were made at some representative localities of the village. The results of these tests are also indicated in Table 1.

Based on the data given in Table 1, together with the general criteria used for the selection of the proper site for the biogas plants, three sites were chosen for the three initial demonstrations. These were decided to be:

- An Indian unit attached to the house of Mr. Ibrahim Deiab. This will be refered to as demonstration unit 1.
- A Chinese unit attached to the house of Mr. Mahmoud El-Sharkawi. (referred to hereafter as demonstration unit 2)
- A Collective Indian unit attached to both the houses of Mr. Fawzi El-Fekki and Mr. Mohamed Hegab (referred to as demonstration unit 3.

All the three unito are to be linked to the animal sheds of the respective house or houses. Unit 2 is also attached to the house latrine, since that house suffered very much from a blocked sewerage system (It was originally planned to construct a new septic tank for that house to solve these troubles, but these plans were given up after building the digester). The third unit was planned to be a pilot experiment for the community-type biogas plant, where various types of technical and social problems can be noted at a controllable size.

All the houses except that of Mr. Hegab have seperate outdoors animal sheds. That of Mr. Hegab is an indoor animal shed. All have enough space for the construction of the respective biogas unit.

III. General social description of the selected families:

All the four families are considered as true farmers and they depend mainly on agriculture. Mr. Sharkawi has an additional activity

in animal breeding. Mr. El-Fekki is the Omdah of the village whereas Mr. Deiab is a very respected & influencial member of the village community.

All the families have previous experience in dealing with scientific projects through the More and Better Food project, whose successful demonstrations convinced them of the benefits that can be gained from the adoption of scientific approaches.

All the familie, members (husbands, wives, unmarried daughters, married and unmarried sons, daughters-in-law and so on) live in the same respective house. Most men work in agriculture whereas the women and girls are responsible for the house affairs. Most of the men can read and write.

Table 1 summarizes the basic social and economic data relevant to the biogas project.

As to the houses, all four are characterized by the following:

- They are made of red bricks and each has enough number of compartments, a kitchen and a latrine which is directly connected to septic tank.
- Most of the animal sheds are located outdoors on a part of the free areas around the house. Each shed has an area of 6 x 4 m . Mr. Deiab constructed a new shed specifically for the new biogas project.
- The floors of the sheds are conventional earth, and the use of bedding materials underneath the animals was followed. The animals are confined to the shed during night and are allowed to stay in the fields during day. An Exception is Mr. Sharkawy who allows, most of his animals to stay inside the shedal most all the time.
- All the houses have baking ovens, and these are normally fired by maize straw and dung cakes. Kerosene stoves are the conventional cooking devices.

. All the houses are supplied with electricity and drinking water, however power failure is very frequent.

IV. Design and Construction Work:

The program of the work was planned in such a way as to construct the three digesters simultaneously in order to maximize labor utilization and to save time.

4.1. Sizing of the plants:

On the basis of the amount of manure available from each house with a retention time of 50-60 days, the capacities of the units were estimated as follows:

i . For unit 1 : (For Mr. Ibrahim Deiab)

The farmer owns 2 full grown cows, one large and 2 small calves, and one donkey. The animals spend about $\frac{1}{3}$ of the day inside the shed. Therefore, the manure available per day is equal to $(2 \times 15 + 1 \times 10 + 2 \times 5 + 1 \times 3) \times \frac{1}{3} = 35$ kg/day; with about 16% solid contant. For a feed of 8% solid content the amount of daily input wosd be 70 kg.

Therefore a 5 M^3 digester volume would be suitable for this case.

ii . For unit 2 : (For Mr. Mahmoud El-Sharkawi):

For this case, the digester is to be operated on a small fattening station. The number and age of the calves are continously changing and so does the amount of manure. However, an average of 8 calves is considered perminant. With an average daily manure production of 10 kg for each, a total of 80 would be available. The human excreta from the latrine is estimated to be about 4 kg/day. Therefore the total daily feed would amount to about 170 kg.

Therefore, a 9 m^3 digester will be suitable for this case.

iii. For unit 3 : (For both Mr. El-Fekki & Hegab)

The digester is to be connected to the houses of both farmers. Mr. El-Fekki owns one water buffalo, one cow, one small calf and a donkey; whereas Mr. Hegab owns 2 water buffalos, 2 cows, 2 calves and a donkey. The animals stay in the shed about $\frac{2}{3}$ of the day.

The total manure available will be

$= (3 \times 20 + 3 \times 15 + 3 \times 10 + 2 \times 3) \times \frac{2}{3} = 94$ kg/day

Thus the daily feed would be about 190 kg/day. Therefore a 10 M^3 digester will be suitable for this case.

4.2. Plant layouts:

Figs. 1,2 and 3 show the layouts of units 1,2 and 3 respectively. The location of the respective digester is based on the allowed free space as the land is relatively expensive (residential area). The slurry piping system is 6 " asbestos cement pipes, with small chamber connections to allow for any change in pipe direction. The gas lines from the digesters to the water traps (for units 1 & 2) are $\frac{3}{4}$ " steel pipe while those from the traps to the burners and also the whole line of unit 3 is a $\frac{1}{2}$ " polyethylene hose embedded in hard & thin PVC pipes as casing. For each animal shed there is a mixing chamber to mix the feed. This feed is received from the concrete floor of the shed through sloping channel.

The digested slurry overflows from the digester to a rectangular effluent storage tank.

4.3. Digesters description:

All the digesters constructed are of the conventional original Indian or chinese designs with slight modifications to suit the particular sites. These modifications are:

1. For the Indian digesters, they were made wider and shallower than the orginal with a partition wall to avoid the problem of underground water and also the unstable nature of the very loose sandy soil.

2. The levels of the feed and dischange openings are made lower near the ground levels since the digesters are connected to animal sheds and to allow sufficient slope for gravity flow of the slurry.

3. The wall of the digester was made thinner since high quality brick with very good mechanical properties was used for construction. This affects some saving in the construction cost.

4. From the previous experience of the Manwat experiment, it is clear that a gas holder of capacity 30-40% of the daily gas volume is quite sufficient. Therefore a shallower gas holder was used which can also contribute to the cost saving. To account for the decrease in weight of the gas holder and hence the decrease of gas pressure, a tray was used on the roof of the holder which can be filled either with water or sand.

5. For the Chinese digester, most modifications referred to in the previous report(PB/6) regarding the design of the discharge chamber for pressure control, reduction of gas losses and self overflow of effluent were also incorporated in this design.

6. Because of the instability of the loose sandy soil, it was very difficult to cast the bottom of the digester in a dished form. Therefore such a floor was made flat with an equivalent increase in volume of the cylindrical part.

7. The dome of the digester was made using scaffolded supports. This could save material and labour time the conventional Chinese technique.

Figs.4 to 6 show the detailed drawings of the digesters 1,2 and 3 respectively.

4.4. Some Construction Troubles:

Although the construction work of the three digsters was achieved according to the planned schedule, yet one has to refer to some of the major troubles faced during the construction. These are:

1. During excavation, it was very difficult to go deep to the required depth because of the very unstable sandy soil. Nearly three times the required excavation volume has been removed. Because of the limited space of the site it was impossible to approach the angle of repose of the sand. Moreover, it was not practical at the sites to use any kind of wall support or wall fixation without enormously increasing the construction cost. For this reason, the depth was limited to the maximum possibly attainable depth.

2. Because of the previous problem, the required precalculated depth of digester 3 could not be reached. As the gas holder has already been fabricated with the required diameter, it was not possible to achieve the required 10 m^3 digester volume through the increase of its diameter. Therefore, this digester was undersized to about 7 m^3 only.

3. Because of the relatively long distance between some of the animal sheds and their respective digesters, it was difficult to maintain reasonable slopes along the whole length of the piping system.

V. Construction Cost Estimation:

The estimation of the construction costs of the three digesters is based on the actual existing situation of the three selected sites. The costs of the building materials as well as that of labour are true values existing at the village.

Table 2 represents the estimated amount of construction materials, tools and appliances for each of the three biogas plants. The manpower needed for each step of digester construction is also indicated.

Table 3 summarizes the construction costs of the three plants. The costs include beside the construction of the digester itself, all

other necessary connections needed for the whole plant. These include the site preparation, animal shed modification, pipe connections, and gas-use appliances. Distribution of these costs among the different parts of the plant are given in Tables 4,5&6 for Units 1,2 and 3 respectively.

It has to be mentioned here that the construction costs of the above digesters are far beyond the pre-estimated costs, or even those costs of digesters previously constructed at Manawat Village. This is because of the following:

1. The gas holders have been fabricated at one of the public sector's shops with about 30% extra cost than the estimated one.
2. Most construction materials including the bricks, cement, pipes, gas holders ..etc were transported from far distances to the village. The transportation costs of these materials - which are already included in the above estimates - were relatively high.
3. The distances between the digester sites and the respective houses are relatively long. This required the use of long piping systems for both the flow of feed slurry and the gas.

VI. OPERATION OF THE DIGESTERS

(a) Start Up:

Feeding of the three digesters started according to the following:

Unit 1	10th April 1982
Unit 2	10th April 1982
Unit 3	6th April 1982

The manure needed for the initial loading was bought from the Animal Breeding Farm of the village. Units 2 and 3 sere fed gradually so that they reached the full concentration after about 10 days, whereas unit 1 received a heavy initial loading of cow manure together

with about $\frac{1}{2}$ m^3 of poultry manure which was available at that site. The full loading of this unit was within 2 days.

Build-up of gas pressure started after 7 days for unit 3, 10 days for unit 2 and 7 days for unit 1. However, burnable biogas could be available after 14 days from start for unit 3, 18 days for unit 2 and 35 day for unit 1. The delay of biogas liberation from unit 1 could be either from the excessive loading rate which might have disturbed the equilibrium during the initial stages of the digestion, or it may have resulted from inhibitory action of antibiotics that could have been present with the poultary manure. However, follow-up of the pH of the digesting slurry of this unit during this initial period did not show any abnormality. The pH ranged between 6 and 6.5 during this period.

(b) Regular Operation:

After passing the initial period, each digester received its organic feed regularly on a daily basis. The three digesters received the manure and urine coming out from the shed after being diluted to the required concentration and well mixed. Digester 2 also receives the discharge from the house latrine. The overall management technique of each digester is quite similar to the case of Manawat described in the previous report (PR/6).

Except for some slight operational problems, all digesters perform reasonably well since the time of start till the time of writing this report.

(c) Some Operational Troubles:

Although the respective farmers were well trained on how to operate and manage their digesters, some minor troubles occured mainly as a result of neglecting some of the operational instructions. These troubles are summarized as follows:

1. Excessive dilution of the feed slurry: The farmers being quite happy with their new clean animal shed, they washed the floor of the shed with water much in excess of that required for optimum slurry dilution. As a result of this, dilute effluent discharged from the digester and lower gas rate was produced. This problem has been solved through giving strict instructions to the ladies and training them on the proper management of their animal sheds.

2. In some instances, irregular gas pressure occured due to water condensation in the rubber hose. This problem was solved by teaching the people how to drain this condensate.

3. In some of the digesters, the water present as a seal in the U-tube of the condensate trap has partially evaporated and resulted in some gas leakage. This was solved by adding make-up water to the U-tube.

4. Unit 1 suffered frequently from a thick semi-dried slurry at the annular space between the digester and the gas holder. This happened mainly from leaving the slurry unstirred for a long time. However,strict instructions were given in this regard.

5. For Unit 3, some social conflicts have arisen between the ladies of the two families. Each tried to consume more gas than the other, and each blamed the other for any operational problems of the digester, particularly that due to the excessive dilution of the feed slurry.

(d) Performance of the Digesters:

After the start-up period, the three digesters performed reasonably well. No quantitative data have as yet been collected due to the lack of measurement devices at the village. However, after recently furnishing these digesters with the appropriate devices, regular evaluation of the digester performances can be made. Starting from September 1982, the three digesters are connected to gas meters to

measure the gas consumption by each family. A local technician is now appointed at the village and is given the responsibility of daily follow-up and data collection. Meanwhile, members of the team continue to supervise these follow-up activities through biweekly visits.

VII. Some Preliminary Assessment Of Social Impacts:

As it has been mentioned before, the village people were well oriented toward accepting the biogas technology. Most of the people heard much about the benefits of the technology, and were very willing to have the demonstration at their houses.

After the digesters were put into operation, the people could realize and feel directly the great benefits of the biogas technology. Considerable improvement in the environment was noticed particularly in the areas where the manure was piled or stored. This manure is now replaced by digested slurry. Consequently, bad smells and breeding of flies and insects are prevented. The houses became much cleaner and healthier and milking of cattle became easier through the modification of the animal sheds. The use of the gaseous fuel also added to these improvements.

The area being a reclaimed sandy area, had made the use of the organic fertilizer particularly the digester slurry, of great value. Therefore, people showed great interest in handling and storing the digester slurry carefully.

Visitors to the demonstration sites, either from the village itself or from neighbouring villages were also very interested and satisfied by the outcome of the demonstration and asked to built some other demonstration digesters at their own areas. They were very eager to see the biogas technology being implemented on a wide scale in most villages.

The use of the concrete-floor sheds had considerably reduced the time and efforts allocated for the animal sheds. This had reduced the tedious and costly operations of bedding and cleaning the animal shed. Moreover, considerable free time could be saved for the family members to be used in other economic activities.

The people of Tahrir Area are immigrants from other areas of the Nile Valley and still have relatives in their original home areas. As such they can and actually do convey the results of the demonstration experiments being carried at Omar Makram to their relatives, and therefore this can help in the propagation of information about biogas technology to other Governorates.

Table 1: Basic data on 10 sample families in Omar Makram.

Name	Family size		Land	Cattle		Fuel consumptions/month.			space	water Table
	Adult	Junior	(Faddan)	Large	small	Kerosene (Lit)	Butagas cylinder	Straw & cake.	available	(m)
1) Ibrahim Deiab.	6	6	10	3	2	60	-		v. Suitable	3.70
2) Mahmoud El-Sharkawi	11	3	5	17	-	40	-		v. Suitable	
3) Said Barkat	7	5	5	2	2	60	-		Suitable	-
4) Ahmed Hegab.	7	6	5	6	-	40	-		Suitable	-
5) Saied El-Gabari	10	6	5	5	-	100	-		v. Suitable	2.80
6) Abdel-Razik Hawash	11	5	5	4	1	20	2		Suitable	3.45
7) Abdel-Aziz Badawi	11	6	5	3	3	40	1			
8) Zakaria Asaad.	4	2	5	2	3	40	-		Suitable	-
9) Fawzy El-Fekki.	6	4	5	4	1	60	-		v. Suitable	3.20
10) Mohamed Hegab.	5	3	5	5	2	60	-			

Table 2: Material and Man-power Estimates

		Unit 1	Unit 2	Unit 3
1. Excavation Work:				
Digester pit	M^3	10	25	15
Effluent tank	"	3	3	3
Piping	"	-	2	1
Backfilling	"	3	10	3
Floor of animal shed	"	6	6	12
		22	46	34
Av. M^3/man-day		2	2	2
Total man days		11	23	17
2. Concrete Work:				
Base of digester	M^3	0.35	0.83	0.48
Base of inlet	"	0.06	0.06	0.12
Base of outlet	"	0.05	0.06	0.05
Digester ledge	"	0.60	-	0.80
Cover and over dome	"	-	0.60	-
Pipes fixation & Supports	"	0.05	0.10	0.10
Floor of animal shed	"	2.50	2.50	5.00
Total concrete with 10% excess		4.0	4.6	7.2
gravel	M^3	4.0	4.6	7.2
Sand	M^3	2	2.3	3.6
Cement	kg.	1000	1150	1800
Av. M^3/man.day		1	1	1
Total man days.		4	5	7

Table 2 : Cont.

		Unit 1	Unit 2	Unit 3
3. Brick Work:				
No.of bricks for:				
Digester		1000	1170	1100
Inlet chamber		115	115	230
Outlet chamber		25	170	25
Effluent tank		460	460	460
Piping connections and others.		150	200	250
Total with 10% excess		1900	2330	2270
Mortar for bricks	M^3	1.2	1.5	1.4
Sand	M^3	1.2	1.5	1.4
Cement	Kg	480	600	560
Lime	M^3	-	0.10	-
Av.No of brick laying/Man-day		500	500	500
Total man-days		4	4.7	4.5
4. Plastering:				
Surface area	M^2	25	30	27
Mortar for plastering	M^3	0.25	0.30	0.27
Sand	M^3	0.25	0.30	0.27
Cement	Kg	167	200	180
Lime	M^3	-	0.03	-
Ferric chloride	Kg	1.7	2	1.8
Na-Silicate	Kg	6	6	6
Av. M^2/man-day		15	15	15
Total man-days.		2	2	2

Table 2 : Cont.

		Unit 1	Unit 2	Unit 3
5. Piping:				
Asbestos-Cement pipes 6"	M	10	20	22
Steel pipes with fittings ¾"	M	12	1	12
Thin PVC pipes 15 mm.	M	5	20	20
Poly-ethylene hoses	M	15	30	40
Rubber hose	M	4	-	5
Valves ¾"		1	1	1
6. Metal Parts:				
Gas holder		1	-	1
Port for feed chamber		1	1	2
Mixer for feed chamber.		1	1	2
7. Gas appliances:				
Burner		2	2	4
Gas lamp.		1	1	1
8. Miscellaneous:				
Test for level of undergaound water		✓	✓	✓
Iron rods for concrete	K_g.	-	5	-
Paint for gas holders	K_g.	2	-	2
Wood form for dome		-	✓	-

Table 3 : Construction Costs

	Unit	Unit Price L.E.	Unit 1 amt.	Unit 1 Cost	Unit 2 amt.	Unit 2 Cost	Unit 3 amt.	Unit 3 Cost
A. Materials:								
Gravel	M^3	6	4	24	4.6	28	7.2	43
Sand	M^3	1	3.5	4	4	4	5.3	5
Cement	Ton	35	1.65	58	1.95	68	2.54	89
Bricks	1000	66	1.90	125	2.33	154	2.27	150
Lime	M^3	28	-	-	0.13	4	-	-
$Fe\ Cl_3$	Kg	3	1.7	5	2	6	1.8	5.5
Na-Silicate	Kg	1	6	6	6	6	6	6
Cement pipes 6"	M	8	10	80	20	160	22	176
Steel pipes 2"	M	2	12	24	1	2	12	24
Plastic pipes	M	0.2	5	1	20	4	20	4
P.E. hoses	M	0.2	15	3	30	6	40	8
Rubber hoses	M	2	4	8	-	-	5	10
Valves 2"	No	5	1	5	1	5	1	5
Gas holder	No	-	1	425	-	-	1	450
Port	No	10	1	10	1	10	2	20
Mixer	No	10	1	10	1	10	2	20
Burner	No	5	2	10	2	10	4	20
Gas lamp	No	2	1	2	1	2	2	4
Misc.	-	-		16		16		16
				816		495		1055
B. Labour :								
Excavation	Man day	3	11	33	23	69	17	51
Concrete work	"	4	4	16	5	20	7	28
Brick work	"	13	4	52	4.7	61	4.5	59
Plastering	"	11	2	22	2	22	2	22
Pipe laying	"	3	1	3.0	2	6	2	6
Plumbing	-	-	-	7	-	2	-	7
Misc.	-	-	-	10	-	10	-	10
				143		190		183
				959		685		1238

Table 4: Construction costs of Unit 1 (itemized)

		Digester		Animal Shed		Pipe Conection	
		amt.	Cost	amt.	Cost	amt.	Cost
A. Materials:							
Gravel	M^3	1.25	7.5	2.75	16.5	-	-
Sand	M^3	2.5	2.5	1.5	1.5	-	-
Cement	Ton	0.962	34.0	0.688	24.0	-	-
Lime	M^3	-	-	-	-	-	-
Bricks	1000	1.75	115.0	-	-	0.15	10.0
Ferric chloride	K_g	1.7	5.0	-	-	-	-
Sodium silicate	K_g	6	6.0	-	-	-	-
Cement pipes 6"	M	6	48.0	-	-	4	32.0
Steel pipes 3"	M	-	-	-	-	12	24.0
Plastic pipes	M	-	-	-	-	5	1.0
Polyethylene hose	M	-	-	-	-	15	3.0
Rubber hose	M	4	8.0	-	-	-	-
Valves 3"	N^o	1	5.0	-	-	-	-
Gas holder	N^o	1	425.0	-	-	-	-
Port for feed	N^o	1	10.0	-	-	-	-
Mixer for feed	N^o	1	10.0	-	-	-	-
Burner	N^o	-	-	-	-	2	10.0
Gas lamp	N^o	-	-	-	-	1	2.0
Miscellaneous	-		7.5	-	4.5		4.0
B. Labour :							
Excavation & Back filling	Man days	8	24.0	3	9.0	-	-
Concrete work	"	1.25	5.0	2.75	11.0	-	-
Brick work	"	3.7	48.0	-	-	0.3	4.0
Plastering	"	2	22.0	-	-	-	-
Pipe laying	"	-	-	-	-	1	3.0
Plumbing	"	-	-	-	-	-	7.0
Miscellaneous	"	-	10.0	-	-	-	-
Total man days.			792.0		67.0		100.0

Cost in L.E.

Table 5: Construction costs of Unit 2 (itemized)

		Digester		Animal Shed		Pipe Conection	
		amt.	Cost	amt.	Cost	amt.	Cost
A. Materials:							
Gravel	M^3	1.82	11.0	2.75	16.5	-	-
Sand	M^3	2.5	2.5	1.5	1.5	-	-
Cement	Ton	1.172	41.0	0.688	24.0	0.09	3.0
Lime	M^3	0.25	7.0	-	-	-	-
Bricks	1000	2.11	139.0	-	-	0.22	15.0
Ferric chloride	K_g	2	6.0	-	-	-	-
Sodium silicate	K_g	6	6.0	-	-	-	-
Cement pipes 6"	M	2	16.0	-	-	13	144.0
Steel pipes 2"	M	-	-	-	-	1	2.0
Plastic pipes	M	-	-	-	-	20	4.0
Polyethylene hose	M	-	-	-	-	30	6.0
Rubber hose	M	-	-	-	-	-	-
Valves 2"	N^o	1	5.0	-	-	-	-
gas holder	N^o	-	-	-	-	-	-
Port for feed	N^o	1	10.0	-	-	-	-
Mixer for feed	N^o	1	10.0	-	-	-	-
Burner	N^o	-	-	-	-	2	10.0
Gas lamp	N^o	-	-	-	-	1	2.0
Miscellaneous	-	-	7.5	-	4.5	-	4.0
B. Labour :							
Excavation & Back filling	Man days	1.9	57.0	3	9.0	1	3.0
Concrete work	"	1.8	7.0	2.75	11.0	-	-
Brick work	"	4.2	55.0	-	-	0.5	7.0
Plastering	"	2	22.0	-	-	-	-
Pipe laying	"	-	-	-	-	2	6.0
Plumbing	"	-	-	-	-	-	-
Miscellaneous	"		10.0	-	-		
Total man days			412.0		67.0		206.0

Costs in L.E.

Table 5: Construction Costs of Unit 3 (itemized)

		Digester		Animal Shed		Pipe Connection	
		amt.	Cost	amt.	Cost	amt.	Cost
A. Materials:							
Gravel	M^3	1.7	10.0	5.5	33.0	-	-
Sand	M^3	2	2.0	3	3.0	-	-
Cement	Ton	1.1	39.0	1.375	48.0	0.06	2.0
Lime	M^3	-	-	-	-	-	-
Bricks	1000	2.0	132.0	-	-	0.27	18.0
Ferric Chloride	K_g	1.8	5.5	-	-	-	-
Sodium Silicate	K_g	6	6.0	-	-	-	-
Cement pipes 6"	M	6	48.0	-	-	16	128.0
Steel pipes 2"	M	-	-	-	-	12	24.0
Plastic pipes	M	-	-	-	-	20	4.0
Poly ethylene hose	M	-	-	-	-	40	8.0
Rubber hose	M	5	10.0	-	-	-	-
Valves 2"	N^o	1	5.0	-	-	-	-
Gas holder	N^o	1	450.0	-	-	-	-
Port for feed	N^o	2	20.0	-	-	-	-
Mixer for feed	N^o	2	20.0	-	-	-	-
Burner	N^o	-	-	-	-	4	20.0
Gas lamp	N^o	-	-	-	-	2	4.0
Miscellaneous	-	-	7.5	-	4.5	-	4.0
B. Labour :							
Excavation & Back filling	May days	11	33	6	18.0	-	-
Concrete work	"	1.7	6.0	5.5	22.0	-	-
Brick work	"	4	52.0	-	-	0.5	7.0
Plastering	"	2	22.0	-	-	-	-
Pipe laying	"	-	-	-	-	2	6.0
Plumbing	"	-	-	-	-	-	7.0
Miscellaneous	"	-	10.0				
			878		128		232

Cost in L.E.

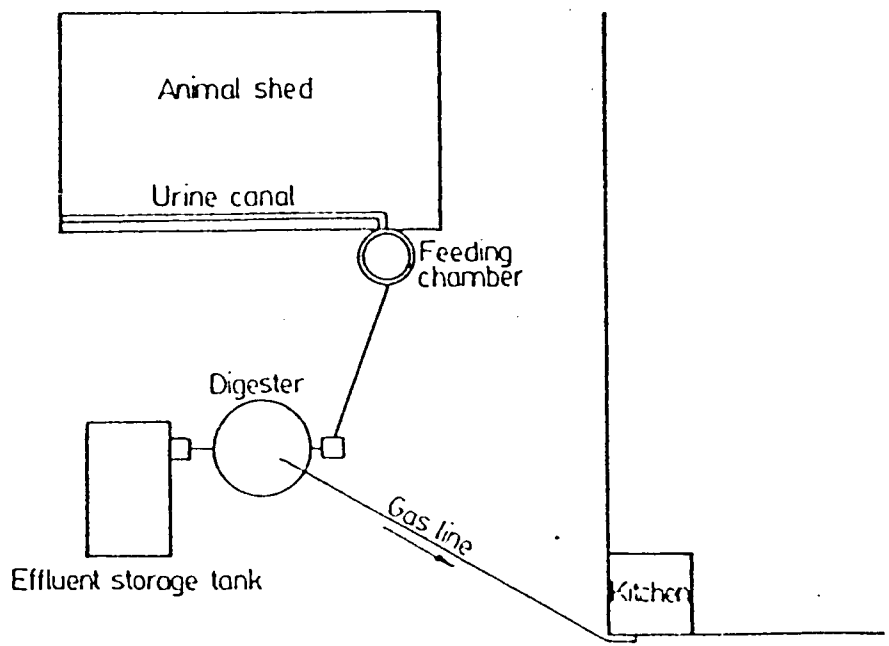

Fig. 1 . Omar Makram Modified Indian digester layout and connections.

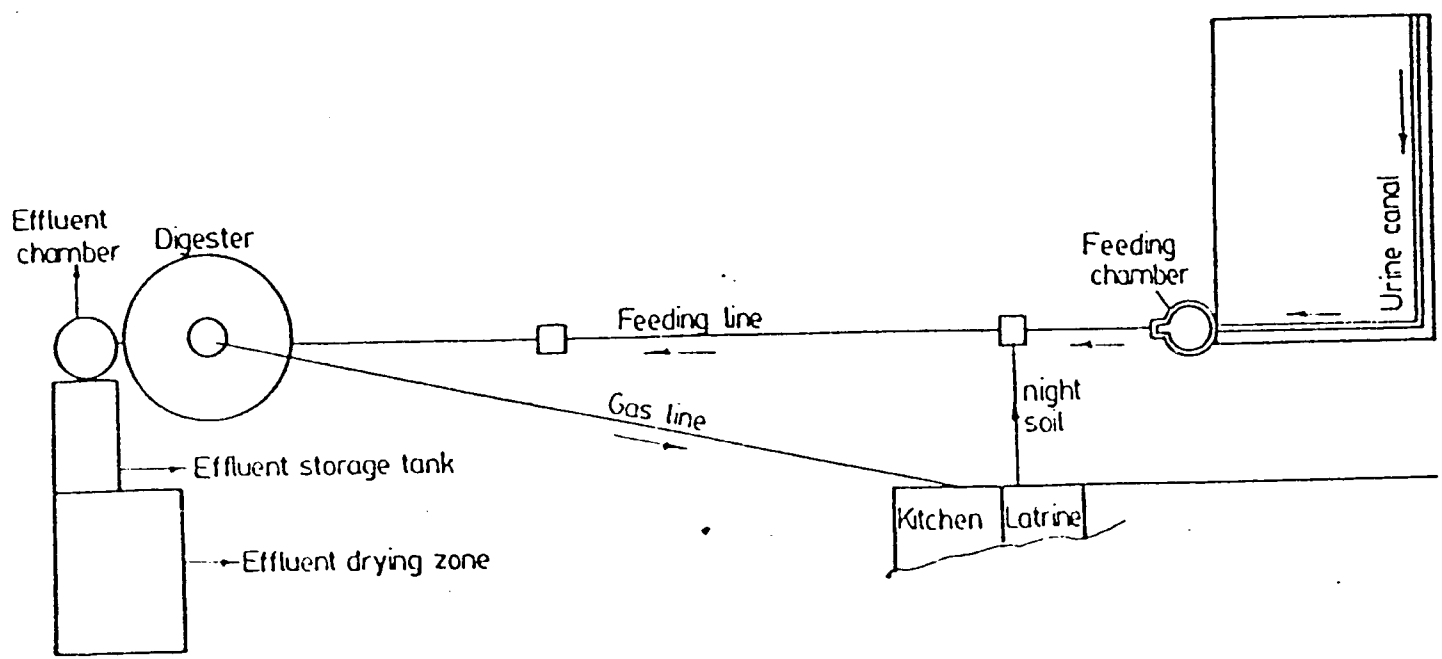

Fig. 2 Omar Makram Modified Chinese layout and connections.

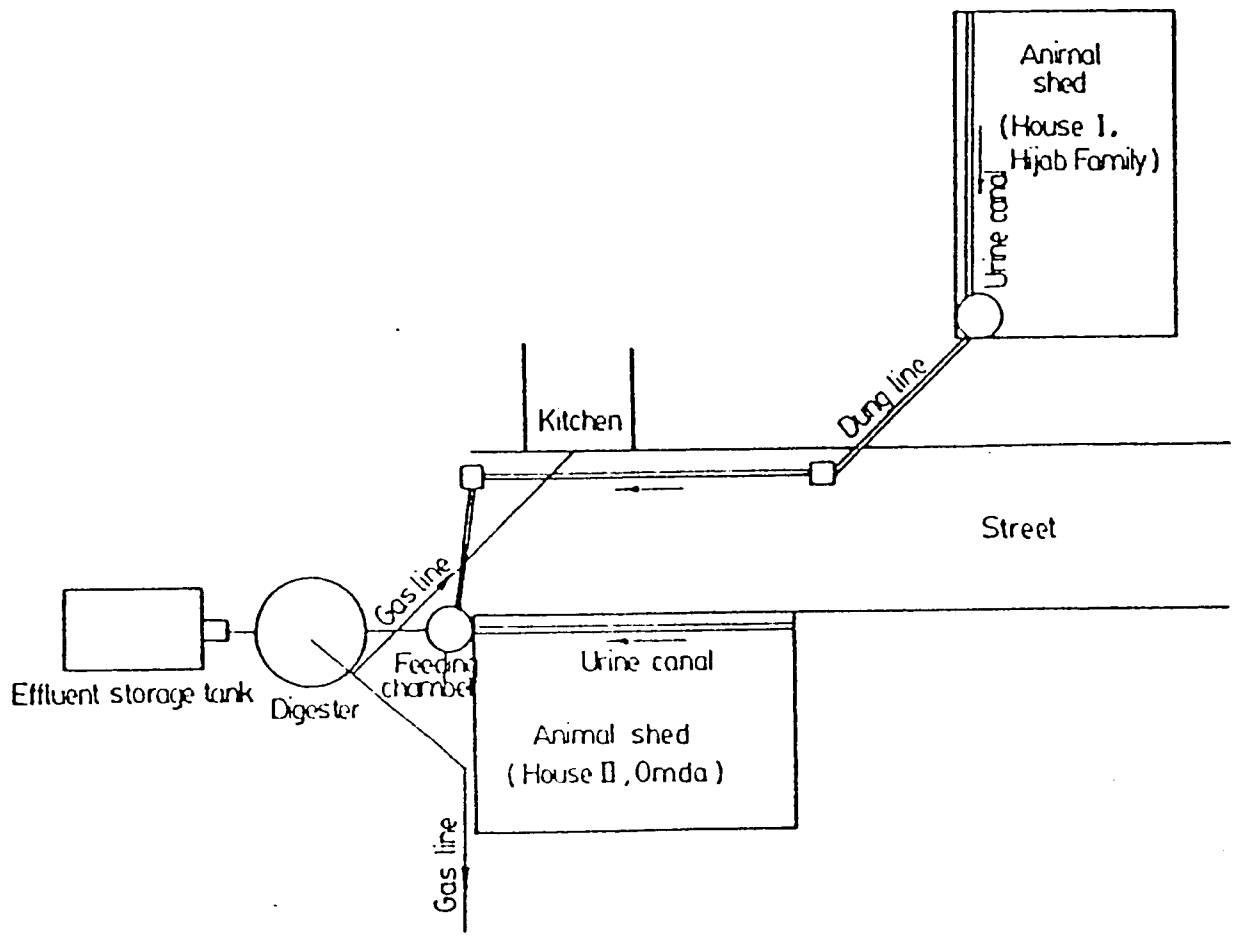

Fig. 3 . Omar Makram Pilot Communal Unit layout with the connection to the two sharing houses .

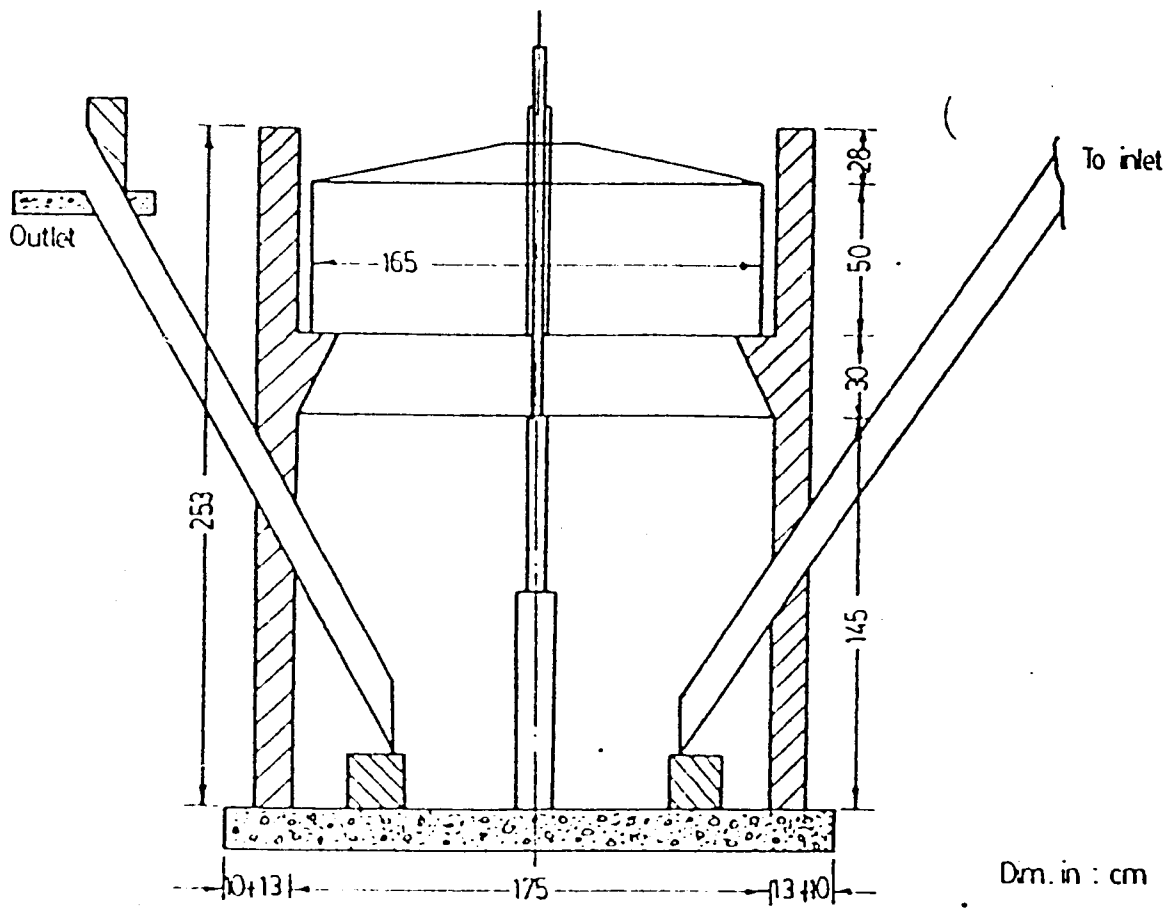

Fig. 4 . Omar Makram Modified Indian type digester (5 m^3).

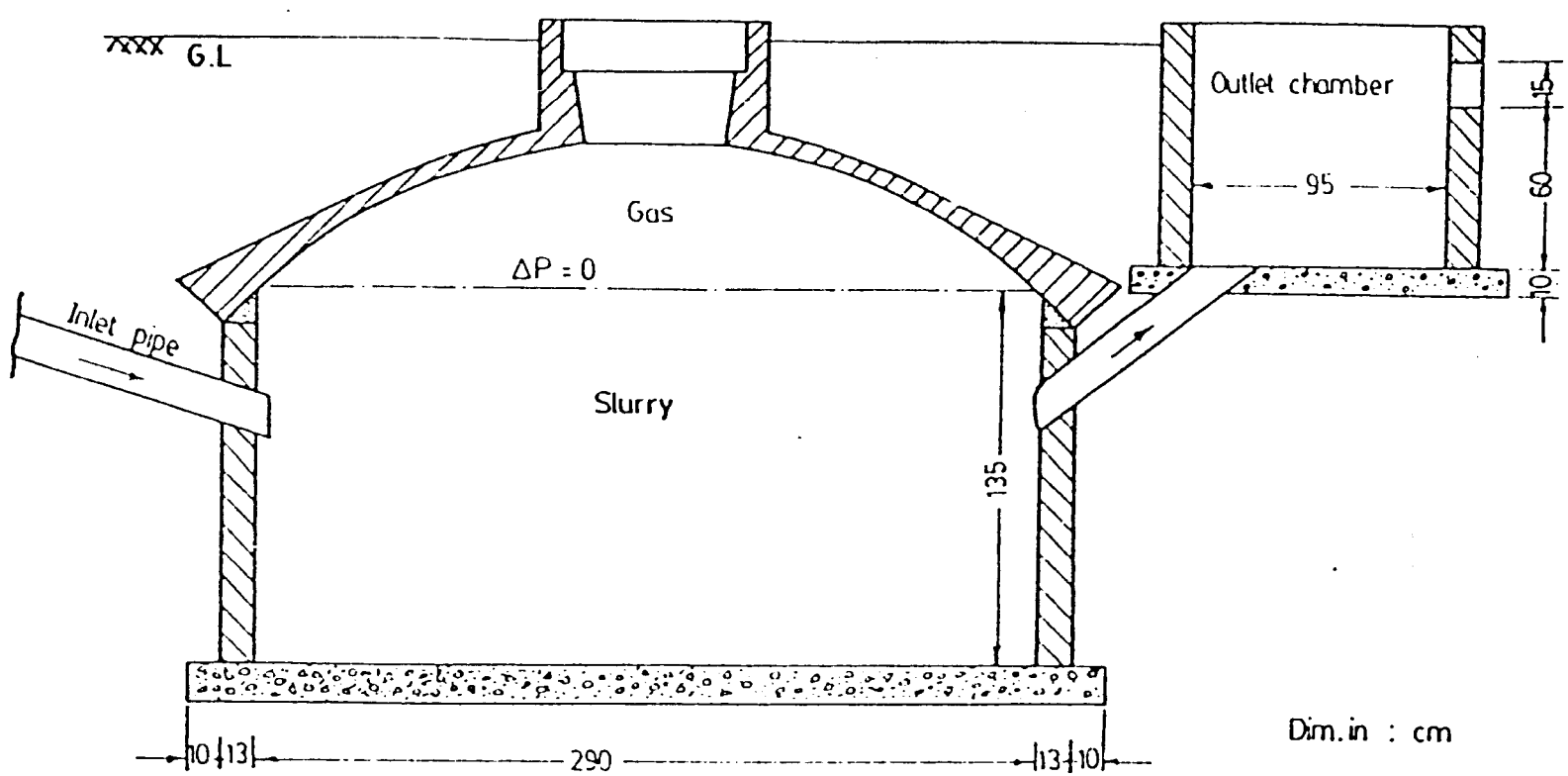

Fig. 5 . Omar Makram Modified Chinese type digester (9 m^3) .

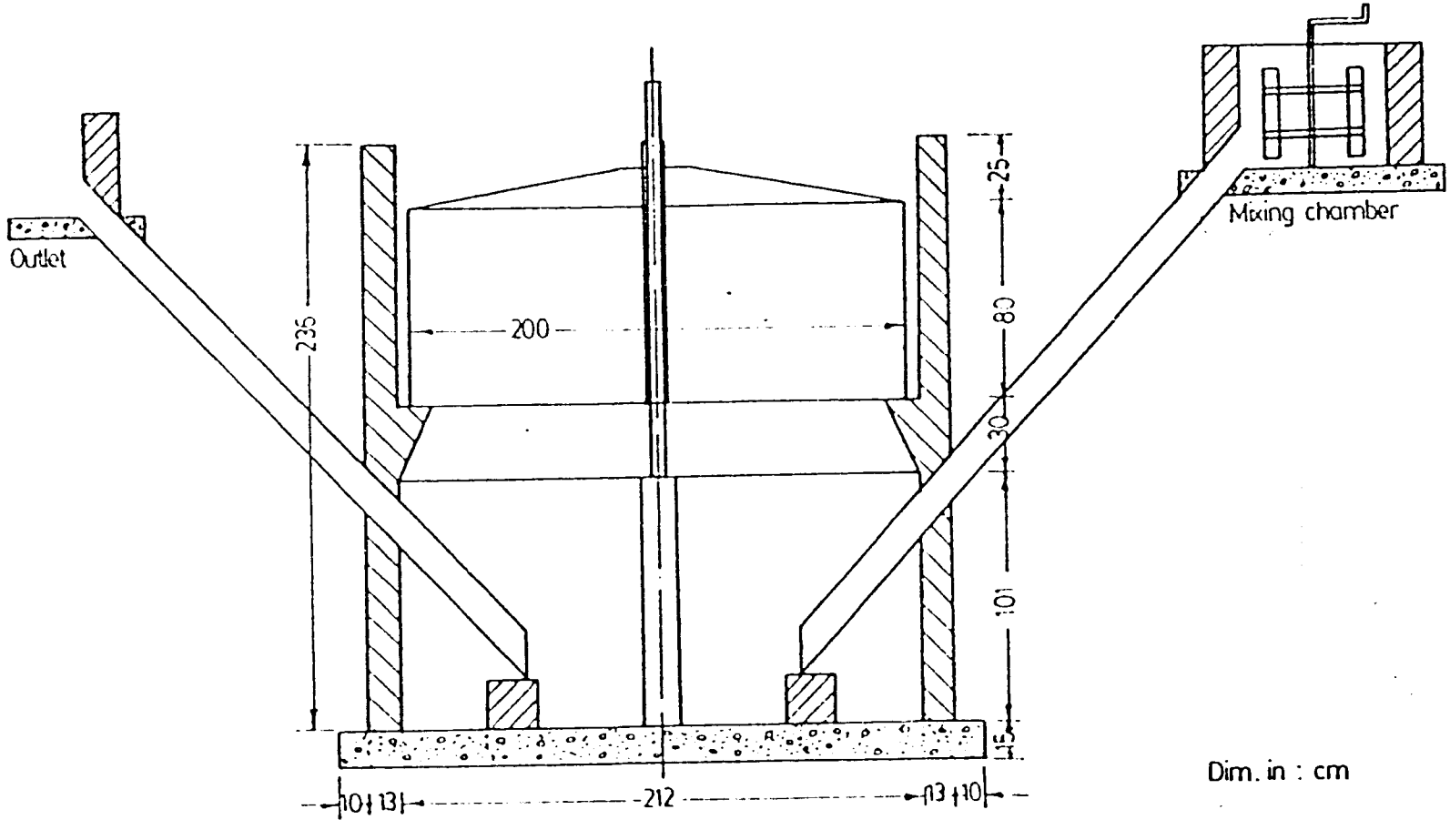

Fig. 6 . Omar Makram Pilot Communal Unit of the modified Indian type .

Annex 2

Follow-up of the Demonstration Units
at Al-Manawat Village
(Engineering Group)

I. The modified Indian type digester.

The unit operates well and very much according expectations. However, it should be noted that during the winter season, especially February, the slurry temperature was low and went down to about 16 C. Accordingly, the gas production rate exhibited a sharp drop. Only about 0.5 m^3/day was obtained during this month. Such amount of gas is less than one fourth the production rate during August. This means that increasing the digester volume or operating on a relatively long retention time (95 days) can not lead to a satisfactory solution. It appears, therefore, that the most effective solution would evolve from increasing the temperature of digestion by any means.

The unit was operated properly by the farmer. Some troubles were noticed and were solved and the farmer was trained to solve such problems in the future. The main troubles were:

1. Clogging of the gas orifices leading to improper functioning of the gas-use devices. This was solved by cleaning the orifices.

2. Sticking of the gas holder due to the formation of strong scum layer. This was solved by addition of water and proper mixing by thegas holder body on a daily basis.

3. Losses of the gas through the empty water-trap due to water evaporation and neglect of make-up. Addition water was added to the required level in the water-trap.

4. The clogging of the gas line by the condensate water. The condensate water was removed and the system operated well.

2. Chinese type digester

The digester continues to operate without any troubles. The produced gas is utilized for operation of gas-use devices for demonstration purposes. These include: a gas stove, a heater, a lamp and a gas refrigerator. The daily gas production is low and th.s is mainly due to the insufficient and non-regular feeding. Due to such irregularities in digester feeding, its performance data could not be determined.

Annex 3

Modification of the Chinese-type Digester

(Engineering Group)

Village-type appropriate biogas technology has undergone major developments particularly in China and India. The Chinese fixed-dome digesters are less expensive to build since they do not incorporate a moving gas holder. However, they have some disadvantages. Among these, the following may be listed:

1. The gas pressure can be as high as 100 cm. water-column. This relatively higher pressure than that of the Indian type which is normally in the order of 10 cm. water column, imposes more demanding constructional techniques and precautions and may adversely affect the overall efficiency of the plant.
2. The gas pressure is constantly varying which does not permit efficiency maximization of gas-use devices.
3. An appreciable amount of gas is lost, mainly from the outlet chamber.

Numerous publications concerning the various aspects of biogas technology have appeared in the recent literature. Surprisingly enough, the effect of the digester operating pressure is totally ignored. Therefore, a study was conducted to clarify the effect of digester pressure on gas rate, composition and losses. An attempt was also made to increase the efficiency of the Chinese-type digesters by developing a modified outlet chamber design.

A shallow and circular Chinese type digester was used for the study. A small size unit of 5 m^3 volume was operated on water buffalos dung of 9-10% solids concentration. The retention time was held at 40 days.

The digester pressure was fixed at a given level by forcing the gas liberated to pass through a water-column resistance according to the required pressure. Thus the gas pressure inside the digester was held constant during all the experiment duration. The gas liberated after reaching the required pressure was steadily vented to the atmosphere. The experimental unit is shown in Fig.1.

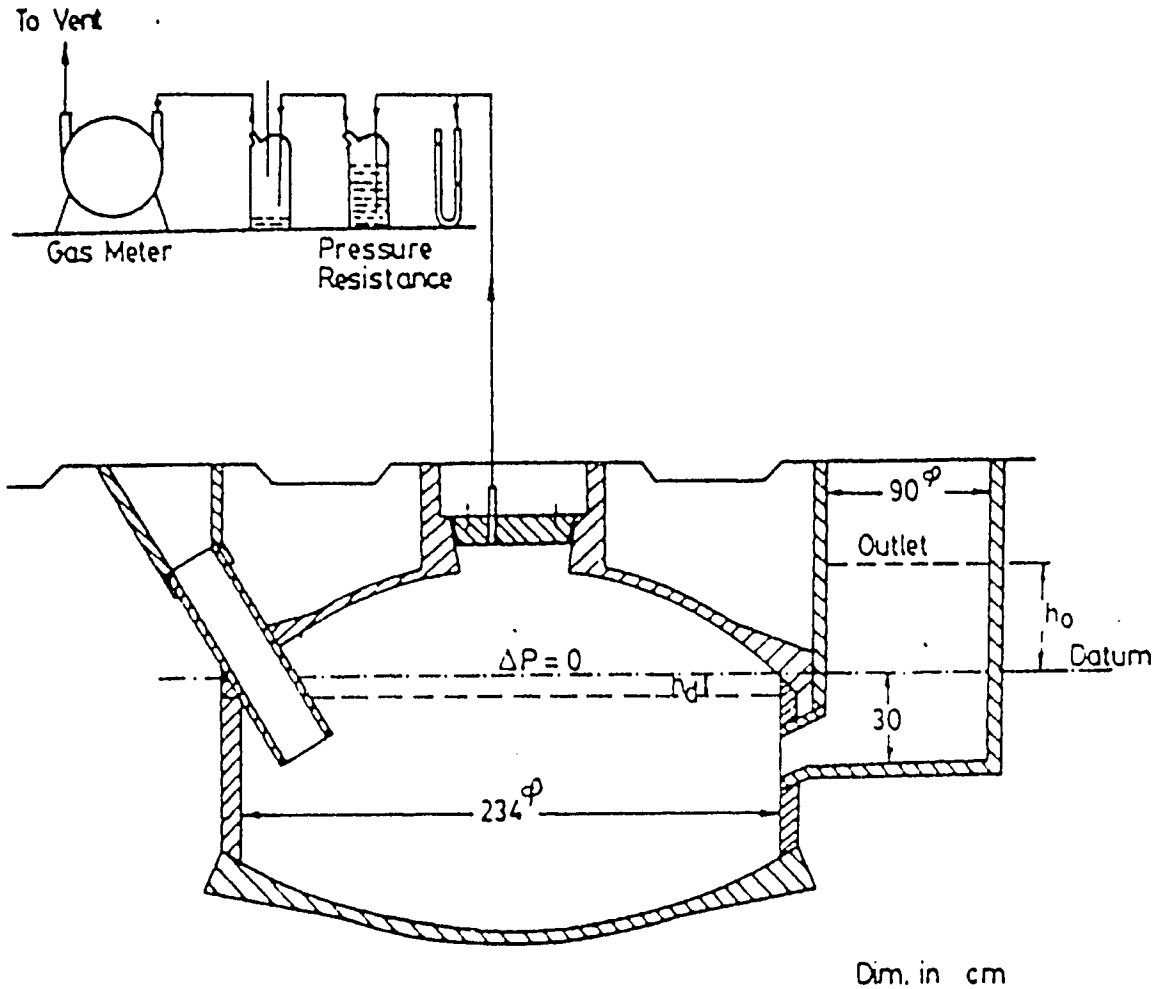

Fig. 1 . The 5 m^3 digester and experimental set up.

Since the operating pressure limits of the Chinese type digester are usually between 0-100 cm watercolumn, the range of 3-70 cm, watercolumn was used in this study. The digester was allowed to operate for some days after changing the pressure to reach steady state conditions, after which the volume of the gas liberated per day was measured using a gas meter. The gas volume liberated at the predetermined pressure head was measured for 3-4 days, and a mean value was taken. One sample of the gas at each pressure was analysed by chromatography. The conditions of the experiments are given in Table 1.

The gas production rates obtained at different pressures are given in Table 1 and are shown graphically in Fig. 2. The volume of gas obtained per day decreased with increasing pressure. The gas composition was also affected by increasing the digester pressure. As seen from Fig. 3, the methane content increased by increasing the digester pressure reaching a maximum value of about 76 % at a pressure of 55 cm watercolumn, after which the methane content tends to have a constant value. This can be attributed to the increase in carbon dioxide dissolution in the liquid slurry with increasing pressure. Thus, the noted decrease in the amount of gas obtained is partially compensated for by the increase in the methane content (the main combustible constituent of biogas).

It should be noted also, that increasing the pressure inside the Chinese-type digester, increases the dead slurry volume present in the outlet chamber. Since the gas generated from this portion of slurry is generally not collected, and would thus represent a loss and contributes to the prevailing decrease in gas production rate. Evaluation of the effect of this parameter on the gas rate is therefore very important and is further discussed below.

The typical family-size Chinese-type digester used in this study is shown in Fig. 1. At zero pressure, the level of the slurry is the same in both the digester and its outlet part. At this condition, in the Chinese design, the slurry height in the outlet chamber ranges between 48 cm for the 6 m^3 digester and 64 cm in the 12 m^3 digester. In the 5 m^3 digester used in the present

Table 1. Effect of digester pressure on gas rate, composition and losses.

Operating conditions			Gas production		Gas composition, % volume			Methane prodn.	Gas losses	Methane losses	Total methane
ΔP cm H_2O	Pressure mm Hg	Temp. oC	m^3/day	m^3/m^3. day	CH_4	CO_2	H_2	m^3/day	m^3/day	m^3/day	m^3/day
3	741	23	-	-	53.51	45.95	0.54	-	-	-	-
7.5	744	22.5	0.958	0.238	61.66	38	0.34	0.590	0.055	0.034	0.624
20	755	22.9	0.883	0.223	64.78	33.44	1.78	0.572	0.067	0.043	0.615
37	767	23.2	0.828	0.214	75.42	24.43	0.15	0.624	0.083	0.062	0.686
55	780	24.0	0.758	0.201	76.58	23.36	0.06	0.580	0.098	0.075	0.655
70	785	24.0	0.717	0.195	74.91	25.01	0.08	0.537	0.105	0.078	0.615

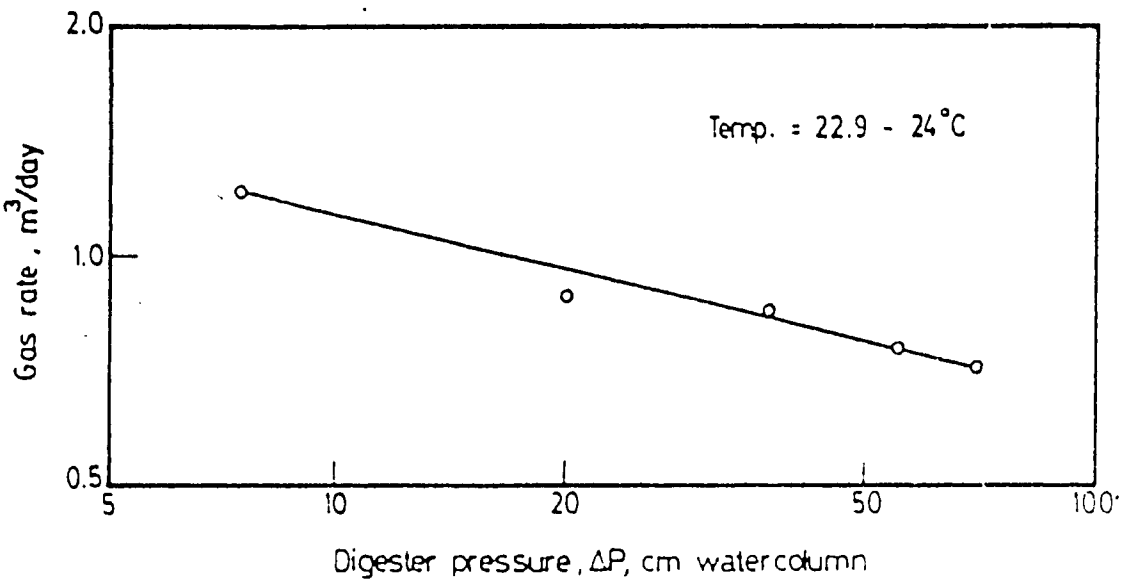

Fig. 2 . Effect of gas pressure inside the digester on the available gas rate.

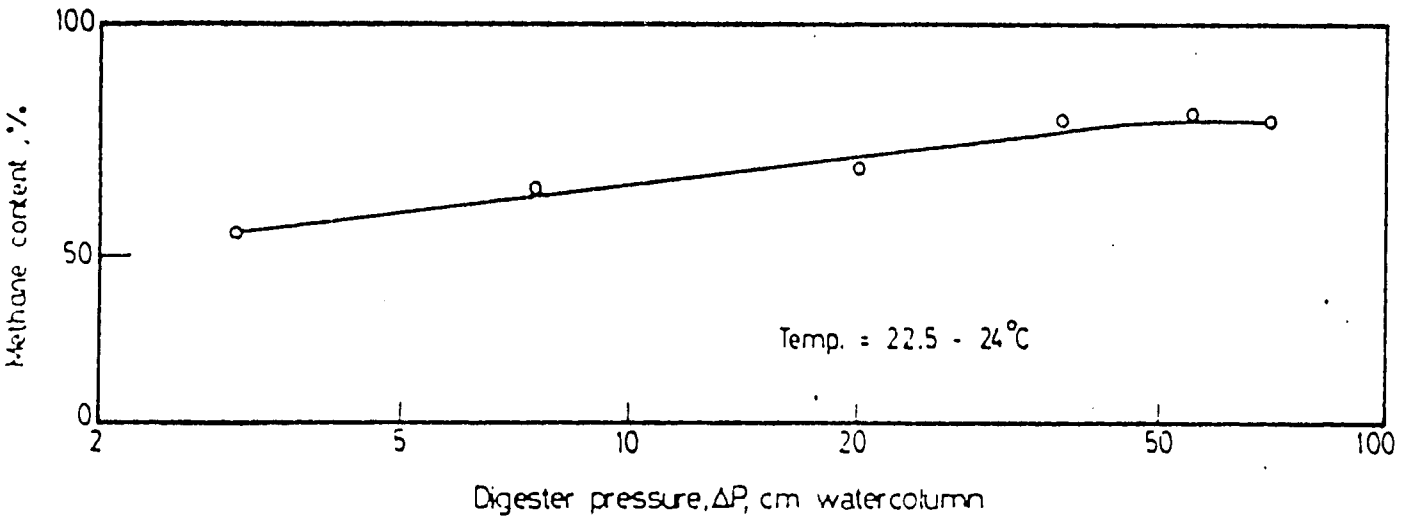

Fig. 3 . Effect of digester pressure on methane content of gas .

study, this height was equal to 30 cm, which is very close to the similar Chinese design.

If the level at zero pressure is taken as the datum line, then as soon as some gas is liberated and collected in the dome, the pressure inside the digester is increased, forcing the slurry from the digester to the outlet chamber. Accordingly, if the liquid level in the digester decreases by a height (h_d), the same slurry volume displaced will increase the liquid height in the outlet chamber by (h_o), (neglecting the feed line due to its small volume).

Let, digester diameter = d_d, outlet diameter = d_o

$$\text{then}, \frac{\pi}{4} \cdot d_d^2 \cdot h_d = \frac{\pi}{4} \cdot d_o^2 \cdot h_o \qquad (1)$$

$$\text{or}, h_d = h_o \frac{d_o^2}{d_d^2} \qquad (2)$$

$$\text{The digester gauge pressure} = \Delta P = h_d + h_o = h_o \frac{d_o^2}{d_d^2} + h_o \qquad (3)$$

$$\text{or}, h_o = \Delta P \frac{d_d^2}{d_d^2 + d_o^2} = \Delta P \frac{(2.34)^2}{(2.34)^2 + (0.9)^2} = 0.87 \Delta P \qquad (4)$$

$$\text{The dead slurry volume} = (\frac{\pi}{4} \cdot d_o^2)\ 0.3 + \frac{\pi}{4} \cdot d_o^2 \cdot h_o \qquad (5)$$

$$\text{The dead slurry volume} = (0.19 + 0.55\ \Delta P)\ m^3 \qquad (6)$$

Using Equation (6) the dead slurry volume was calculated at the different values of operating pressures employed.

The gas losses from the outlet chamber at different operating pressures are estimated on the basis of the dead slurry volume and the gas production rate. The results are given in Table 1. They clearly indicate that the gas losses are appreciable and increase

with the increase of operating digester pressure.

Table 1 indicates small change in the total amount of methane available from both digester and that estimated from the outlet chamber, and is not appreciably affected by changing the pressure. The small deviations in these results can be attributed to the effect of minor operating temperature variations and/or probable small errors in gas sampling and analysis.

Thus, it can be concluded that the variation of digester pressure in the mentioned range does not affect the fermentation process. The outlet chamber design appears to be a major cause of gas losses. It follows then that attention should be focused on the need for developing a new modified outlet chamber capable of minimizing the gas losses. A possible modification can be based on decreasing the amount of dead slurry in the outlet chamber, while keeping the same effective gas holding capacity of the digester.

The key ideas in the proposed modification is:

First: the dead slurry volume at zero pressure in the Chinese design is quite high and can be eliminated totally. Thus, the datum line should lie at the bottom of the outlet chamber, or a little lower (about 10 cm.). The main disadvantage of this modification is that some difficulties can exist in case of manual discharging of the daily effluent. However, these difficulties can be avoided either by discharging manually at the time of high pressures or by self flow of slurry through a specially designed overflow at the required pressure (discussed later).

Second: Change the constant cross section of the outlet chamber into variable one with the smaller diameter at the bottom. Such a design is expected to be suitable for the family size digesters of volumes in the range of 5-12 m^3 and is shown in Fig. 4.

The main advantages of this design are:

1. Decreasing the dead amount of slurry at low operating pressures, thus increasing the digester efficiency.

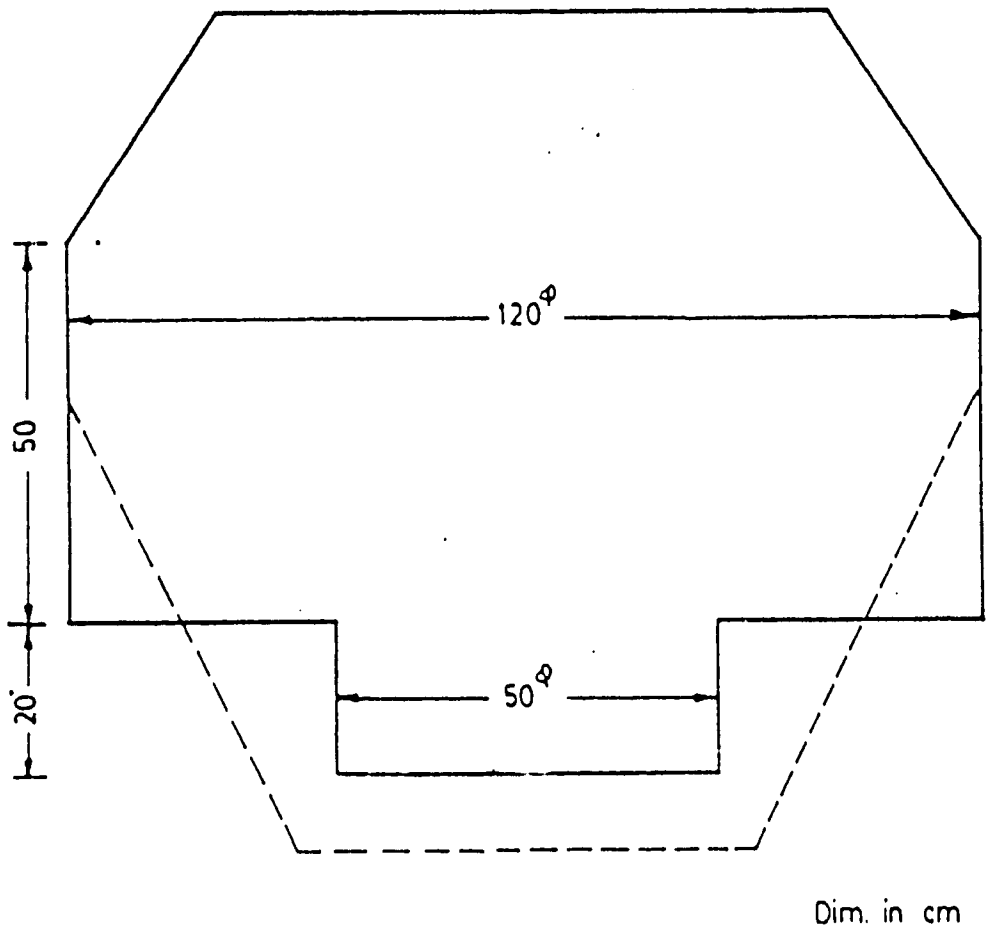

Fig. 4 . Modified Outlet Chamber.

—— Cylindrical shape

----- Truncated cone shape

2. At very low pressures ($\Delta P < 20$ cm H_2O), the liberation of even the smallest amounts of gas inside the digester can very quickly affect an increase in gas pressure, thus assisting the functioning of the gas use devices which would otherwise be inoperable.

3. At moderate pressures ($\Delta P = 30 - 50$ cm H_2O), the gas liberated and stored, slowly increases the gas pressure, i.e., the gas pressure becomes more stable.
   Hence, an increase in the efficiency of the gas use devices can be attained. It is worthy to mention in this context that the inherent low combustion efficiency of the system and which is considered as one of the main disadvantages of the variable pressure digesters can be partially overcome.

4. The cross section and heights of the chamber ports can be adjusted in such a way as to minimize gas losses with the required holding capacity of gas, while still sustaining more efficient gas combustion.

Generally, for fixed dome gas holders the gas-use devices are designed to operate at high pressure. If the operating pressure is taken = $40 \begin{smallmatrix}+10\\-20\end{smallmatrix}$ cm watercolumn, then we can define the effective holding capacity as that volume of gas which is available for utilization at any moment, i.e., the volume of gas available at pressures higher than 20 cm watercolumn. The gas volume present at lower pressures cannot be used and thus, does not play any role in the effective gas volume.

The effective volume of gas stored was calculated for the different designs based on the above definition by considering the effective gas holding capacity = 0 at $\Delta P = 20$ cm watercolumn. The volume of gas holder at zero pressure was taken equal one m^3. Figure 5 shows that the modified design (cylindrical shape) decreases sharply the digester pressure while keeping the same effective gas holding capacity. Thus, for the storage of 0.2 m^3 gas, the gas pressure in the modified design is 39 cm. H_2O compared to 49.5 cm H_2O for the typical Chinese design. Increasing the stored gas volume to 0.3 m^3, affects an increase in the gas pressure to reach

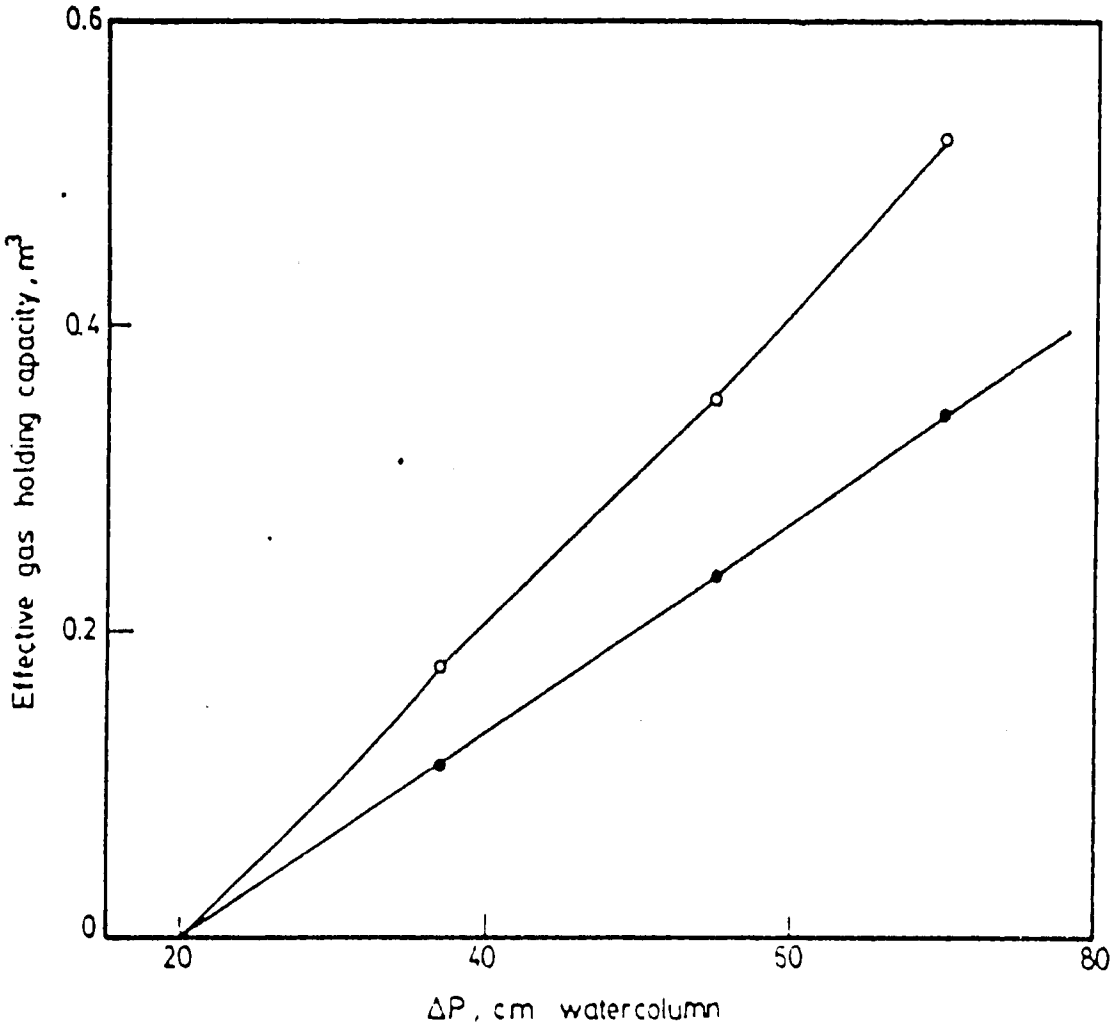

Fig. 5 . Effect of gas holding capacity on digester pressure.

● — Chinese design
o — Modified design

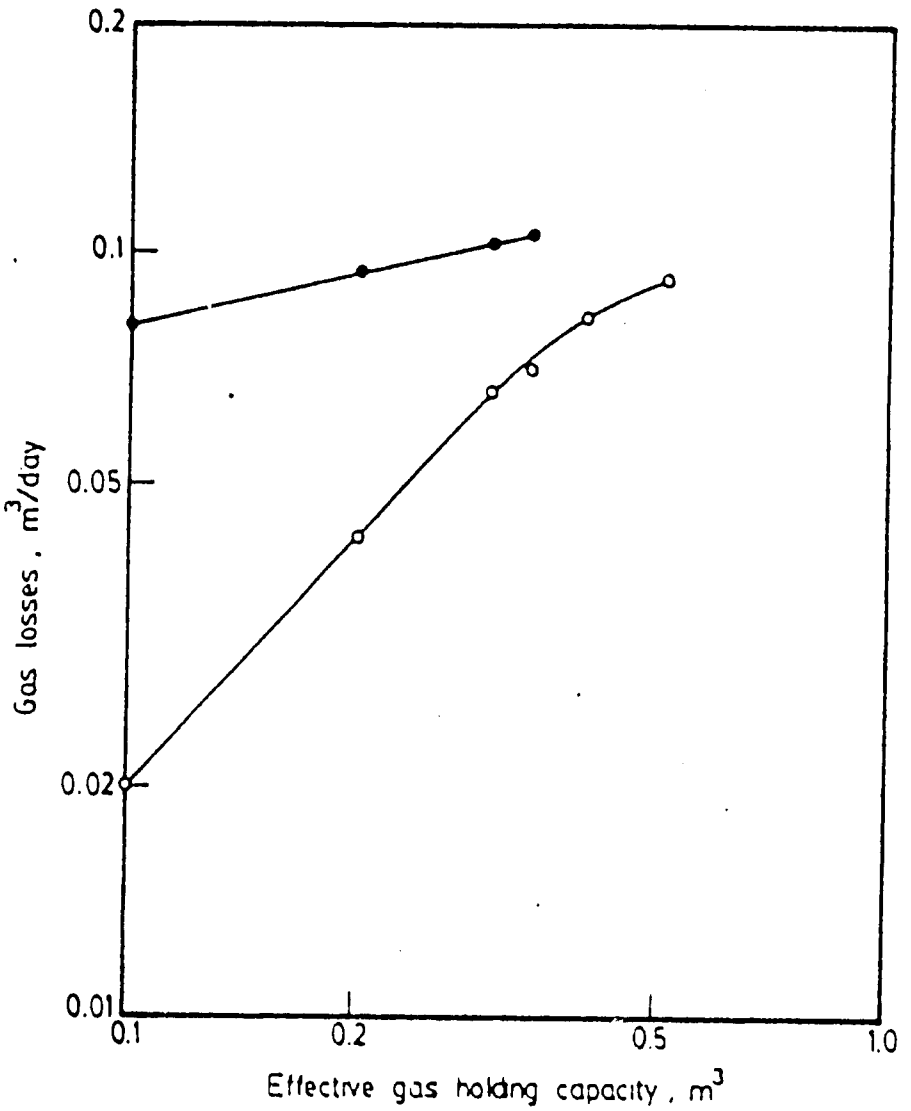

Fig. 6 . Effect of gas holding capacity on gas losses for different designs.

● — Chinese design
o — Modified design

49.5 cm. H_2O in the modified design compared to 64 cm. H_2O in the typical Chinese design. Hence, Partial stabilization of pressure is attained. Figure 6 illustrates the gas losses calculated for the modified design compared to that of the typical Chinese design at the same gas holding capacity. A sharp decrease in the gas losses can be noted for the modified design, especially at low and moderate gas holding capacities (0.1 - 0.3 m^3 for the small family size unit).

It seems to the authors, that this study is the first one to stress on the gas losses from the Chinese type digesters. Very recently however, it was reported that the Janata type digester which is an Indian modification of the Chinese fixed roof digester, produces gas of 20-25 % less than the Indian moving gas holder design. This low gas production rate can be attributed mainly to the losses from the outlet chamber. Based on the above findings, two digesters of the Chinese type were built and in which modifications were incorporated. A 10 cu. m digester with modified outlet Chamber was built in Manawat. The outlet chamber consists of two main parts: the lower is a small diameter cylindrical section which allows relatively rapid response to pressure variations, and the required operating pressure is attained during a comparatively short period. The upper part is ellipsoidal in shape which assists the stabilization of gas pressure, while keeping the required gas storage capacity. The datum line ($\Delta P = 0$) was chosen at h_o = zero. The modified chamber is illustrated in Fig. 7.

Another type of the modified outlet chamber is shown in Annex 1 The digester was built in Omar Makram. The main characteristics of the outlet chamber are:

1. The datum line ($\Delta P = o$) was chosen at 10 cm lower than the chamber base (h_o = - 10 cm). Due to the negligible cross-sectional area of the outlet pipe compared with the digester area, the gas pressure can increase from 0 to 10 cm H_2O spontaneously.

2. The diameter of the chamber is 95 cm. Thus $d_{d/d_o} \simeq 3$ which allows for high storage capacity of gas.

Development of the effluent-discharge system: In the chinese type digester, the daily slurry effluent is emptied either manualy or by using a pump. The frist method is felthy and requires a lot of daily work for removing the effluent. The second method is clean, but would be uneconomical in most cases.

For these reasons an overflow system for the effluent was developed. The system consists of an overflow pipe fixed in the outlet chamber at such a level to attain the required gas-holding capacity. At the designed maximum gas pressure the slurry level reachas the overflow pipe and then flows outside the chamber. The system was designed to start the effluent overflow at a pressure equal to 60-70 cm H_2O and to cease at pressure of 65-75 cm H_2O.

The modified overflow system has been functioning in the two units for a relatively long period without any troubles.

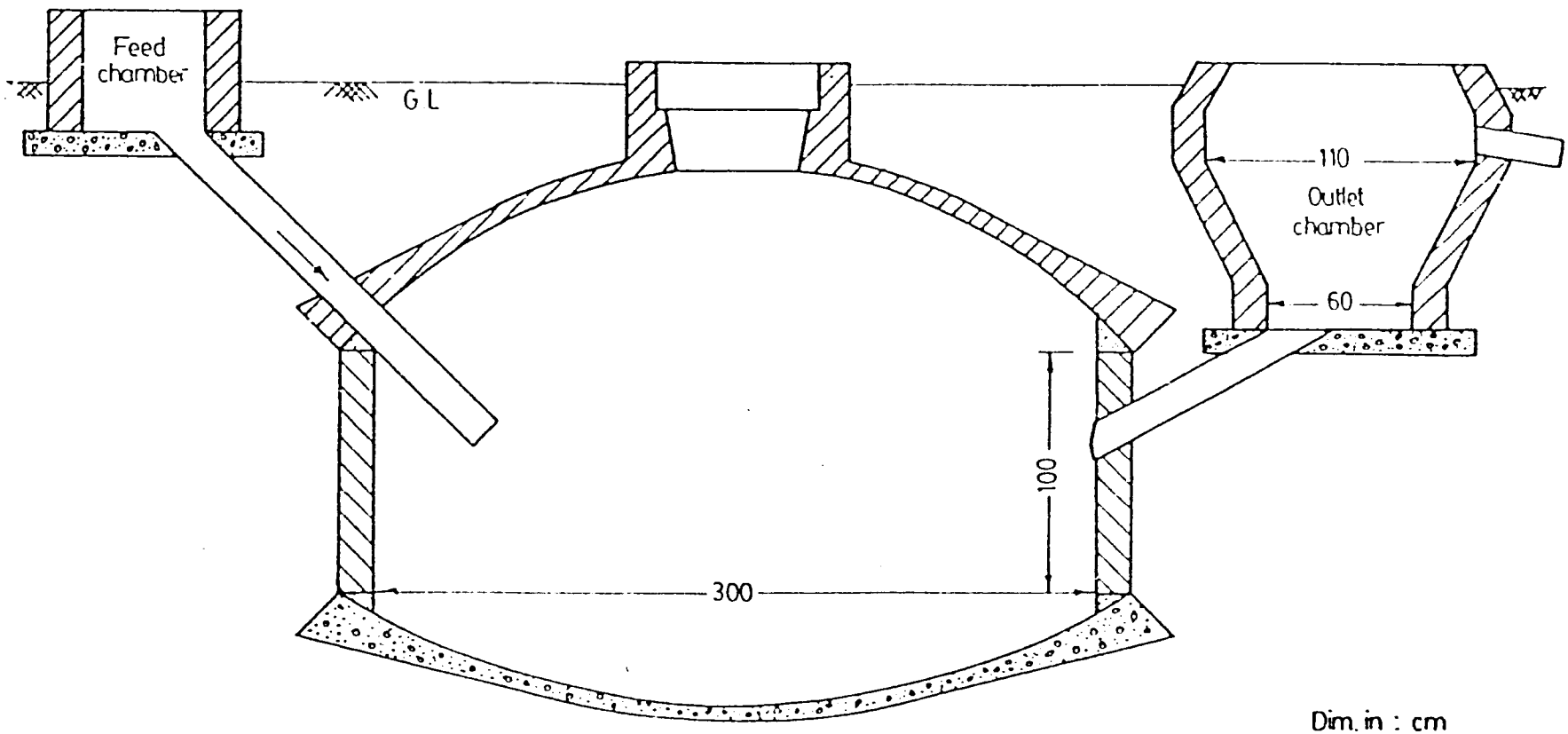

Fig. 7 . Manawat Modified Chinese type digester (10 m^3) .

Annex 4

PERFORMANCE EVALUATION OF RURAL BIOGAS UNITS OF THE INDIAN AND CHINESE VERSIONS

(Engineering Group)

In the context of endeavors to devolop biogas technologies appropriate to Egyptian rural areas, Indian and Chinese designs appear to be foremost candidates. The aim of the present work is to assess the performance characteristics of two family size prototype units of the Indian and Chinese versions with particular reference to their potential suitability to prevaling village conditions.

The Chinese unit used in this investigation is 5 m^3 in size and is almost an exact duplicate of the original Chinese shallow and wide cylindrical model. The second prototype, on the other hand, is a modified version of the horizontal vertical Indian model. Its slurry-holding volume is about 7 m^3. Both units were operated over long enough periods to allow an evaluation under reasonably comparable conditions and that would provide a fairly close representation of those anticipated in the actual village circumstances.

The units used for this study are illustrated in Fig 1 and 2, and are given in details earlier in Reports.

The two prototype units were constructed side by side at the National Research Centre extension site. They were operated under similar conditions to those expected in rural areas. However, the two units were not operated simultaneously. The Chinese unit was operated simultaneously. The Chinese unit was operated during 1980 year while the Indian unit was operated mainly during 1981 year. Both units were operated without any external heating. Water buffalo dung at solids concentration of 9-11% was used as feed stock. The digester was fed daily with the required amount of slurry according to the selected retention time. The feed was prepared by mixing the fresh dung, with equal volume of water. Accordingly, the slurry concentration varied in the range of 9-11% total solids. The organic matter was in the range 70-77% while the C/N ratio was about 20 to 25-1.

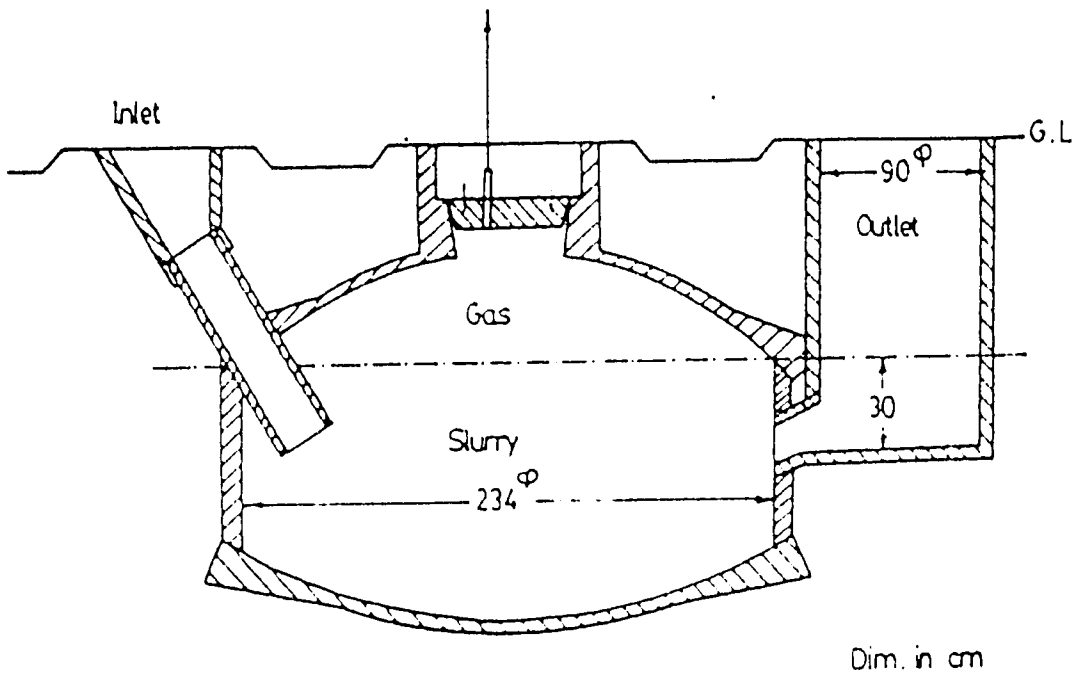

Fig. 1 . The Chinese proto-type digester.

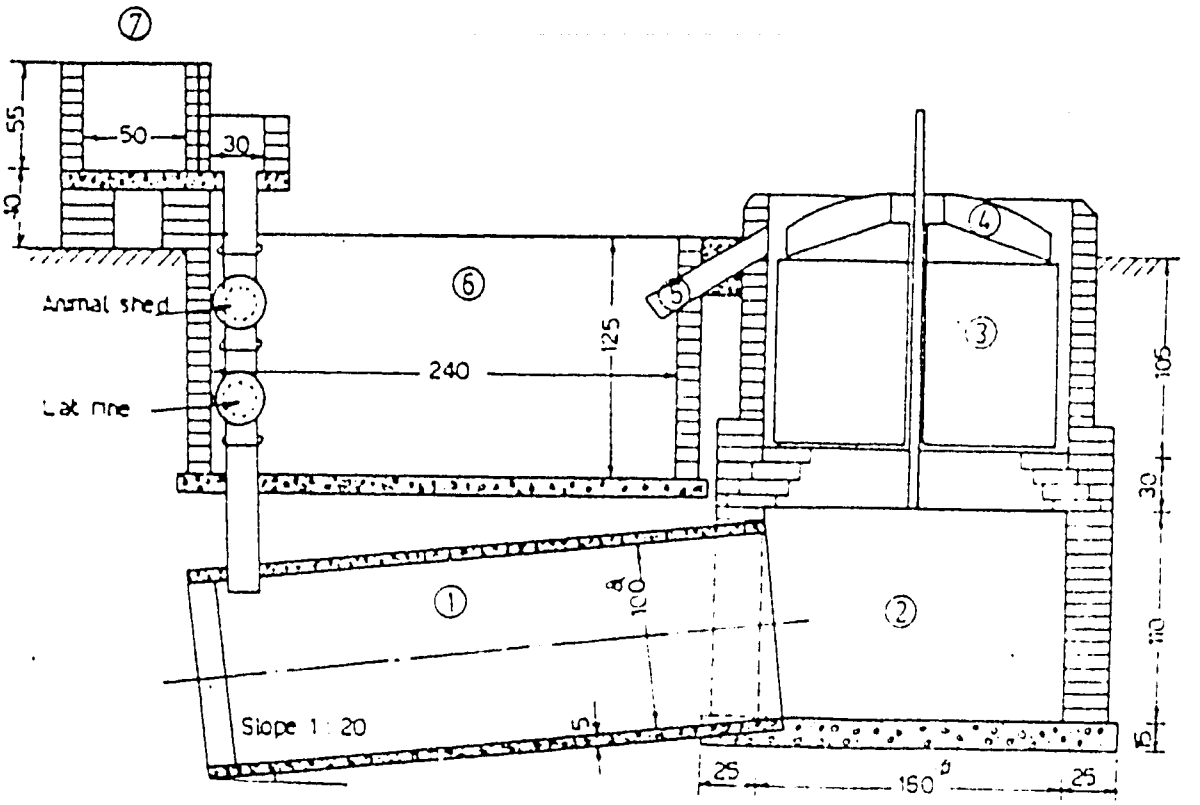

1 - Horizontal part
2 - Vertical part
3 - Gas holder
4 - Solar heater
5 - Effluent pipe
6 - Effluent storage reservoir
7 - Feed mixing chamber

Fig. 2 . The Modified Indian (horizontal-vertical) prototype digester.

The key parameters affecting the performance characteristics of both Indian and Chinese type digesters were studied and evaluated on a comparative basis. These included: the digester temperature and its variation with natural ambient conditions; inherent design features; as well as the effect of temperature, retention time and internal flow patterns on gas production rates and organic matter digestibility.

4.1. Digester temperature

Variation of temperature inside the digester with natural ambient conditions was followed up for long enough periods to indicate the major seasonal affects. The temperature measurements in the Indian prototype were taken at the centre of the vertical section. In the case of the Chinese prototype, measurements were made in the middle of the digester. Results are shown in Fig.3.

The temperatures obtained in the Indian type digester during one whole year operation reflect the effect of the seasonal continuous variations of ambient temperature. The curve exhibits a minimum value during February and maximum during August. The slurry temperature changed over the range from 17 to 29 C. Thus, the mean temperature during the year is about 23 C.

During the test period, the daily average ambient temperature ranged between 10 to 22 C for the cold winter season and 33 to 40 C for the summer season. The soil temperature varied in the range 16-26 C during the same period. Such sharp daily fluctuations, particularly throughout the winter season, are believed to be of a considerable adverse effect on the digester gas productivity.

Comparing the Chinese and Indian types, it can be noticed that the shape of curves are similar (Fig.3) However the temperatures attained in the Chinese type digester are slightly higher than those for the Indian type, the difference being about 0.5-1 C. Though the

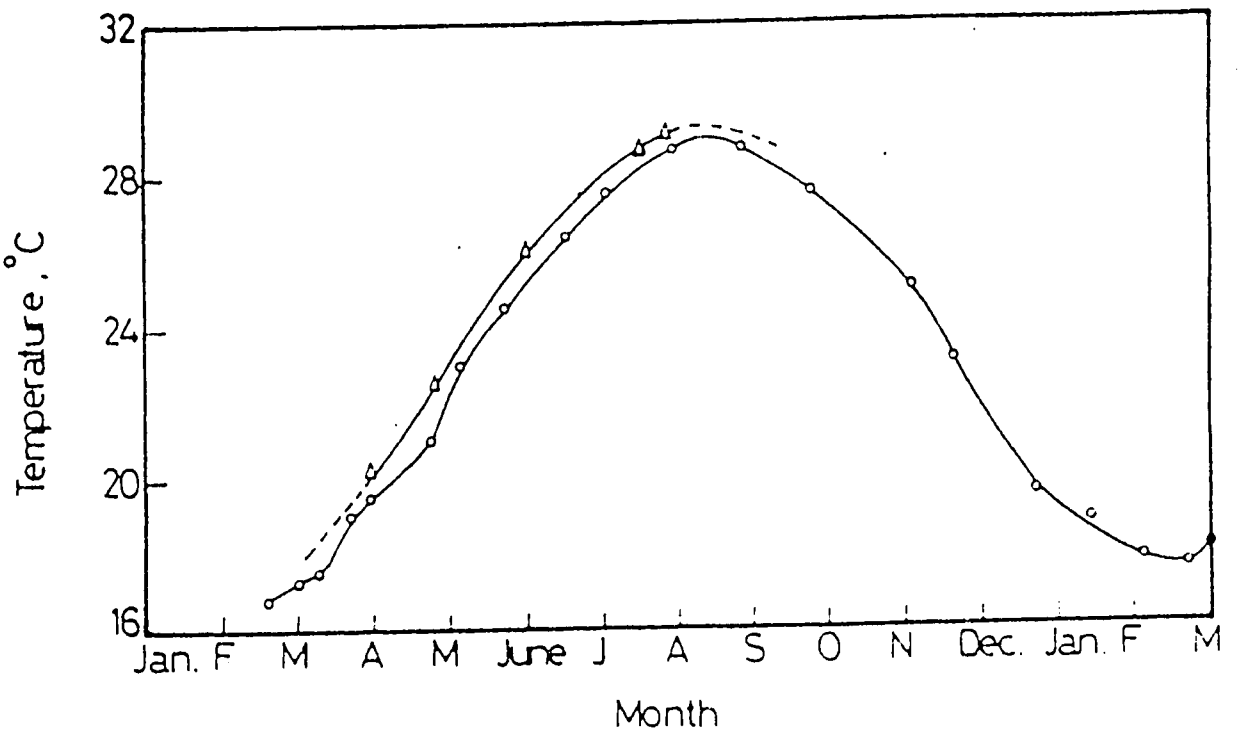

Fig. 3 . Seasonal variation of temperature inside the digester :
▵ Chinese type (1980) ∘ Indian type (1981)

measurements were not carried in the same year but during two consecutive years, these results tend to indicate the comparatively better insulation properties of the Chinese-type digester.

The distribution of temperature in the vertical section of the Indian type digester was measured in the centerline at different elevations. The axial temperature profile obtained during May is shown in Fig. 4. The temperature was lowest at the bottom and increased steadily with increasing height. About 2 C difference was observed. A lower variation about 1 C was noticed in the case of the Chinese-type digester.

4.2. Effect of design and operating parameters on gas production rate.

4.2.1. The Effect of Digester Design

The gas production rates of the Indian and Chinese type digesters are illustrated in Fig. 5. The Indian type digester was operated at retention time of 38.4 days and pressure of 12 cm. water column. The Chinese-type digester was operated under conditions nearly similar. The retention time was 35.4 days. Though the normal Chinese-type digester is characterized by its variable gas pressure, for comparative purposes, the digester was operated under a constant pressure of 7 cm. water column.

The gas rates per unit slurry volume were calculated on the basis of the active slurry volume, which is defined as that confined volume which attributes to the daily gas production rates. Thus, the slurry volume exposed to the atmosphere was not considered.

The results obtained at different temperature for both types, as depicted by Fig. 5, manifest that the gas rates from the two types, and at the same temperature are almost the same. The small difference in gas rates can be attributed mainly to the small differences in operating pressures and retention times..

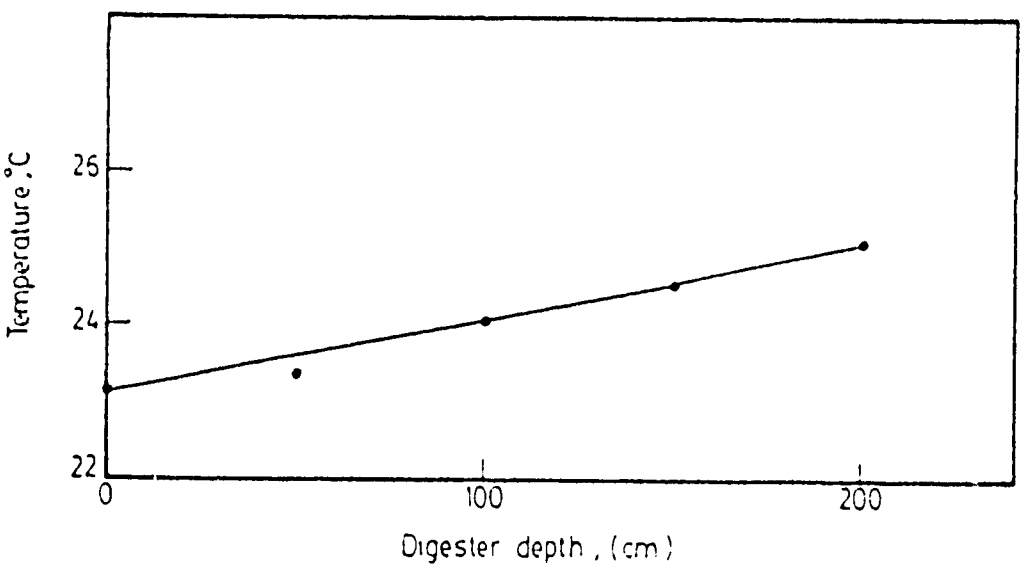

Fig. 4 Axial temperature profile in the Indun-type digester.

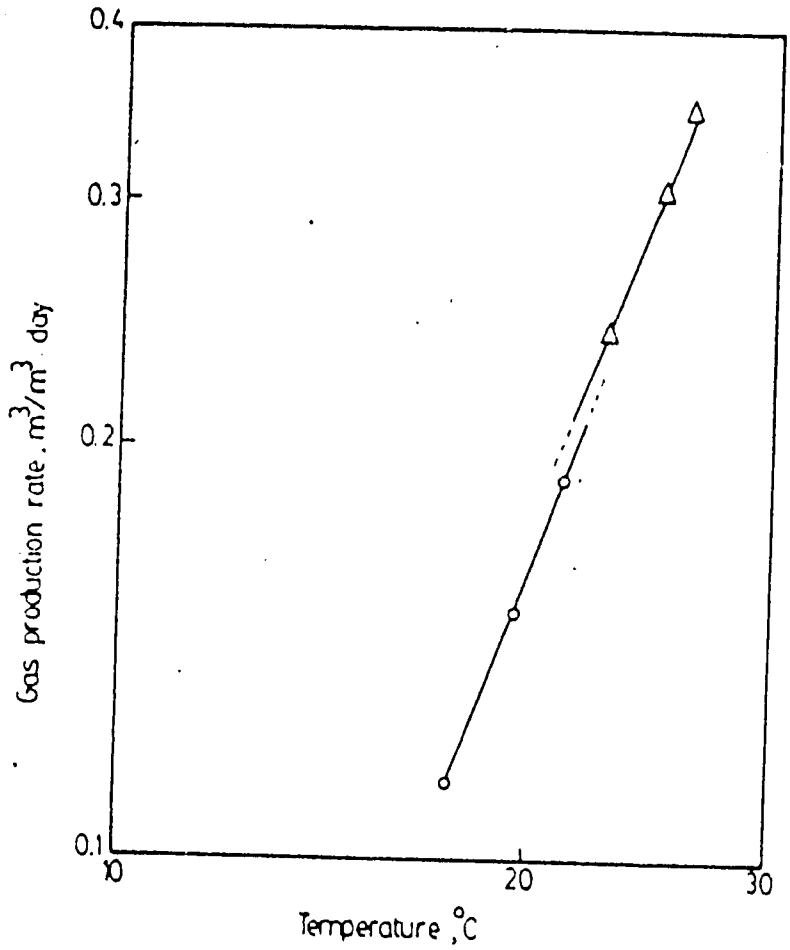

Fig. 5 . Gas production rates of Indian and Chinese type digesters.

Δ Chinese type digester , $\Delta P = 7$ cm H_2O , Retention time = 35.4 days
o Indian type digester , $\Delta P = 12$ cm H_2O , Retention time = 38.4 days

The obtained results tend to clarify the controversial issue of whether gas production rates of Chinese type digesters are lower than those of the Indian types. It seems that, at the same temperature, differences are only due to the differences in active slurry volumes. Since the Chinese-type digesters, operate normally under variable pressure, their active slurry volume would not be constant, but would vary with pressure. The effect of pressure on gas production rate is studied and the results are given in Annex 3. This particular work showed that the increase in gas pressure is accompanied by an increase in the gas losses, and a decrease in the active slurry volume. Therefore the total gas production rate decreases with increasing the pressure. It was also noted that the gas losses can be minimized by small modification in the outlet chamber design.

The gas production rate of Janata-type digester, which is an Indian modification of the fixed roof Chinese type digester-was reported (Biogas Newsletter, 1981), to be less than that of the moving gas holder type by about 20-26%. The relatively high difference in gas rate, seems to be predominantly related to the design of the outlet chamber of the digester.

4.2.2. Effect of the Retention Time

The Indian-type digester was operated at three retention times: 38.4, 57.5 and 95 days respectively. Long retention times were studied because of their relevency to two main cases in Egypt. The first is related to the prevailing relatively low temperatures of fermentation and accordingly the need for long periods to obtain reasonable conversion of organic matter. The second case, is the frequent lack of raw materials supply which also is quite common in Egyptian rural areas. This case also mandates high retention times to obtain the maximum possible conversion of organic matter.

The digester was operated continuously and the retention time was changed periodically. Steady-state was assumed to be attained after one retention time. Measurements were carried out at steady-state condtions for a sufficient period to explore the effect of

temperature which changed slowly as a result of ambient temperature variations. It is worthy to mention that due to the continuous change of temperature, an actual true steady state could never be reached. However, the assumed "practical" steady state, which can be reached after one retention time is more valuable, as it reflects the actual case for operation of such digesters in rural areas.

The gas rate per unit slurry volume exhibited a high decrease with increasing the retention time from 38.4 to 95 days as illustrated in Fig. 6. However, the amount of gas liberated per unit weight of organic matter has increased with increasing retention time.

4.2.3. Effect of temperature

The gas production rate increased sharply with increasing temperature. This can be noted from Figure 5 and 6 for both the Indian and Chinese type digesters. The sharp increase in gas production with increase in temperature was reported previously by many investigators.

Results obtained could be empirically correlated by the relation:

$$V_g \propto (\text{temp})^x$$

Where

V_g = Vomlume of gas liberated, m^3/m^3.day
temp.= temperature of slurry in the digester, C.

The exponent x varied in the range 2.5-2.9 according to the digester type and retention time. This variation may be due to the high sensitivity to temperature and the temperature gradient present in both digesters. Thus, a mean value of 2.7 can be taken as exponent for this relation.

$$V_g = (\text{temp})^{2.7}$$

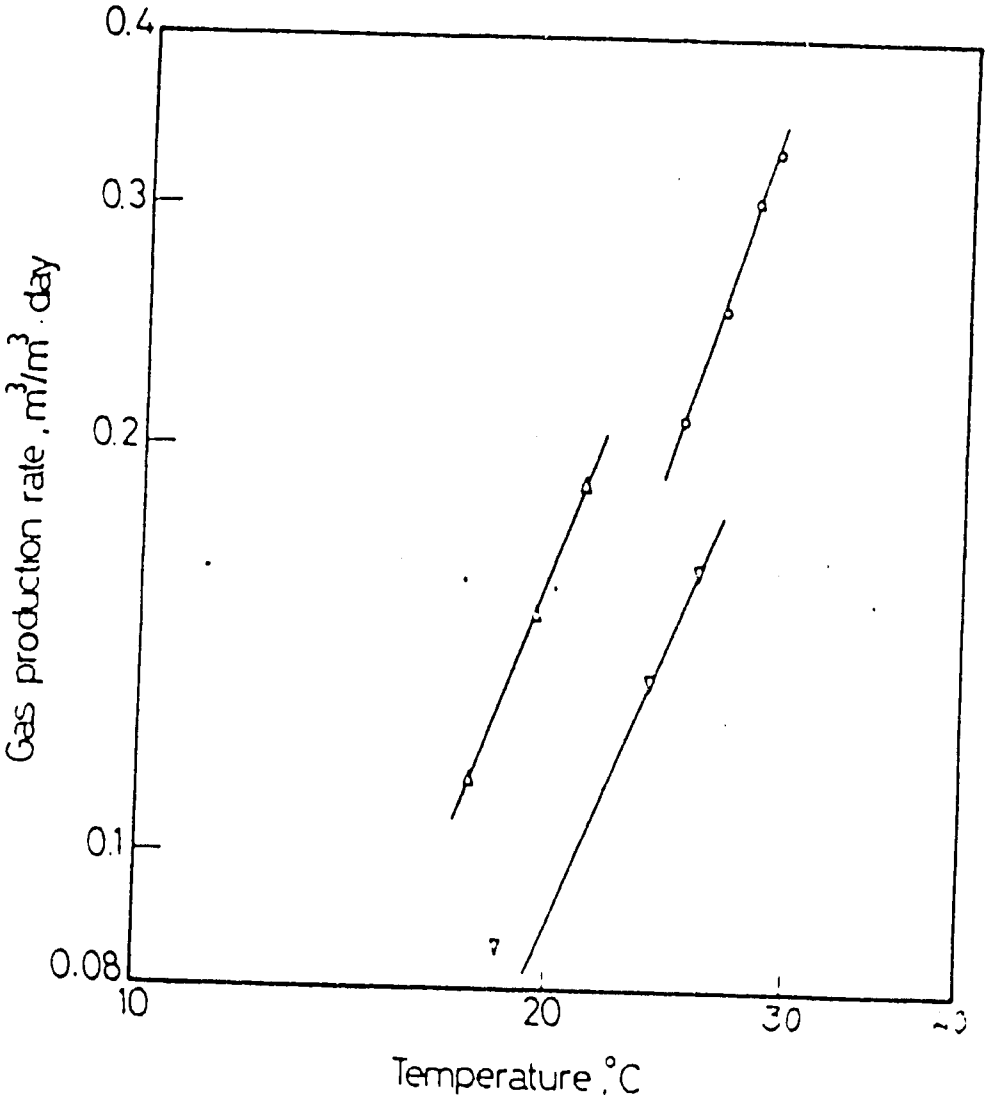

Fig. 6 . Effect of operating parameters on gas production rate for Indian type digester.

Δ Retention time = 38.4 days
o ,, ,, = 57.5 ,,
∇ ,, ,, = 95 ,,

Table 1: Performance characteristics of the Indian type digester.

Operation cond^{ns}		gas rate			% age organic matter conversion.	gas composition		
Temp. C	Retention time, days	$\frac{m^3}{m^3.day}$	$\frac{m^3}{kg.dig.day}$	$\frac{m^3}{kg.solids\ fed}$		CH_4	CO_2	H_2
17.3	38.4	0.107	0.2	0.04	27.8			
19.5	38.4	0.152	0.25	0.056	32.1	66.48	36.97	0.55
27.5	57.5	0.305	0.43	0.143	46.7	56.71	43.29	0
28.7	57.5	0.330		0.155				
18.5	95	0.086	0.18	0.08	33	57.0	43.0	0
22	95	0.11	0.13	0.098	51.8			

4.3. Gas Composition

Some typical gas compositions in the case of the Indian type digester at differnt operating conditions are given in Table 1. The methane content varied in the range 52-66%; carbon dioxide 37-48%, hydrogen 0-0.9%. The gas composition for the Chinese-type digester case was found to be dependent on gas pressure as discussed in Annex 3 the actual case of operating variable pressure, the gas composition varied in the range 53-58% methane, 37-43% carbon dioxide and 0-3% hydrogen. Due to the overlapping of different parameters in this study, it was difficult to assess the influence of other variables.

4.4. Organic matter digestibility

The apparent efficiency of organic matter digestibility for the Indian type digester is given in Table 1. However these results are only indicative because of the interaction of other factors relating to variations in digestion temperatures and feed material. Nearly similar results were obtained for the Chinese type digester as given in Report (PR/4).

4.5. Residence Time and Internal Flow Patterns

Actual flow patterns and mixing characteristics of real digesters would vary considerably according to their design. A valuable approach for the characterization of internal flow behaviour and for assessing its extent of deviation from the two ideal extremes of either perfect mixing or plug flow is provided through determination of residence-time distribution. Anomalous flow behavior can result from numerous sources of deviation from ideal models. The major problems are channeling, dead volume and bypassing. Determination of the residence times in the exit stream is a useful indicator and enjoys worthwhile applications in biological reactor design and analysis. Exit age distribution is also of particular importance in connection with the effect of anaerobic digestion on pollution control and pathogens kill rate.

A number of stimulus response techniques can be used to determine age distributions. Pulse-response experiments were carried out in this work employing a novel tracer and monitoring technique which is simple and readily applicable to tests undertaken under rural conditions.

A plastic mateiral whose specific gravity is approximately the same as that of the digester (1.05) was used as the tracer. It consisted of cylinderical beads, each having a length of about 7 mm and weights 0.015 gm. On mixing with the slurry, these beads could be uniformly spread without exhibiting noticeable settling or floating over long periods of time. Thus, this material reasonably fulfills the requirements of a tracer as it does not react in the digester and at the same time is detectable at small enough concentration without disturbing the transport and physical properties of the digester contents.

At the beginning of the experiment, a pulse of 1.66% tracer concentration was injected into the feed stream. The concentration of the tracer in the effluent was subsequently followed up for a period of about two theoretical retention times. On a daily basis, the plastic beads in the effluent were collected by sieving and washing, after which they were dried and weighed to determine the exit tracer concentration. Thus, experimental data on exit-age or residence-time distribution would take the form of discrete values of tracer concentration measured at successive one-day time intervals after the introduction of the tracer.

The actual mean residence time ($\bar{t}_a$) can then be determined from the following equation:

$$\bar{t}_a = \frac{\sum t\ C(t)\ \Delta t}{\sum C(t)\ \Delta t}$$

Where:

t = is real time

$C(t)$ = tracer concentration in the effluent at time t.

Δt = time increment.

The effective digester volume $\bar{V}_e$ can then be calculated using the equation:

$$\bar{V}_e = \bar{t}_a \cdot v$$

Where

v = the volumetric flow rate

It should be noted that $\bar{t}_a$, the actual mean residence time is different from the nominal or theoretical retention time $\bar{t}$ calculated on the basis of the total digester volume V by the equation:

$$\bar{t} = \frac{V}{v}$$

The effective digester volume V_e is expected to be smaller than the actual digester volume V because of the gas holdup and internal dead volumes. It was estimated in some studies that only about one-third of the volume is used for actual digestion in the case of sewage treatment plants. The remainder of the space is occupied by stabilized solids, supernatant fluid, scum and gas.

The exit-age distribution (E-curve) for the Chinese prototype digester is shown in Figure 7. This represents pulse-response curve in which the dimensionless tracer concentration in the effluent $\frac{C}{C_o}$ is plotted against dimensionless time $\theta = \frac{t}{\bar{t}}$, where:

C is the exit tracer concentration at time t

C_o is the initial tracer concentration

θ is the number of residence times (or the reduced time).

$\bar{t}$ is the nominal or theoretical ratention time = 35.4 days.

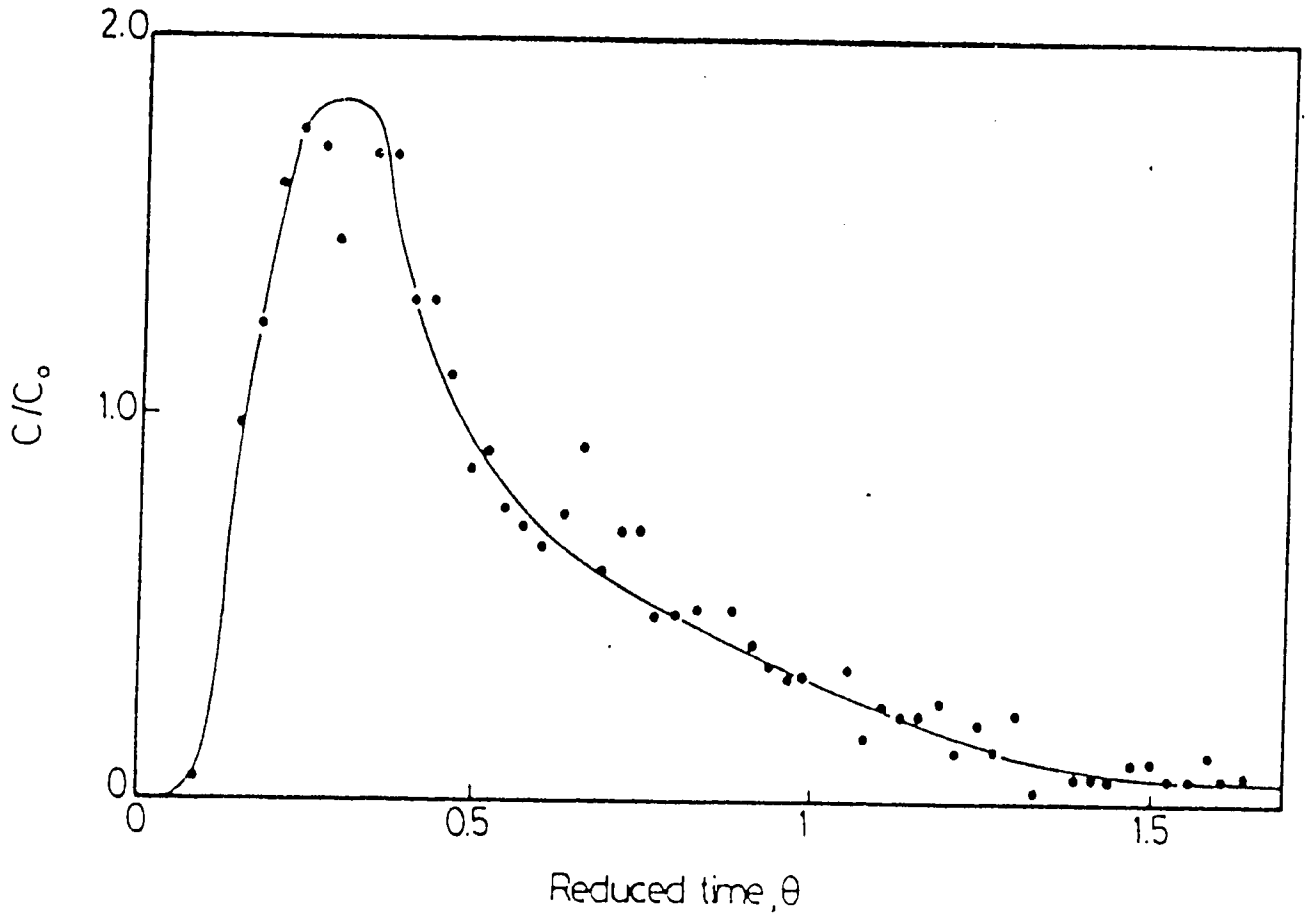

Fig. 7. Effluent tracer concentration from the Chinese type digester operated at 35.4 days retention time.

The actual mean residence time $\bar{t}_a$ was calculated to be about 14 days, which is only about 0.4 of the theoretical retention time. Such a large difference can be explained in terms of the presence of relatively large dead volumes which decrease the effective volume of the digester. In addition to the effects of gas holdup, sediments and the scum layer, the geometrical configuration of the digester itself relating to such aspects as feed inlet and product withdrawal placement, corners and internal structural elements leadings to stagnation zones.

The residence-time distribution (F-curve) is shown in Figure 8. This is calcualted from the exit tracer concentration-time data by graphical integration. Such information can be used directly for modeling mixing effects on digester performance. Otherwise, various combinations of ideal models may be employed in simulation of nonideal behavior. A reasonable model for the Chinese prototype digester could involve a combination of a dispersed plug-flow reactor with a large dead volume occupying about 0.6 of the digester volume.

The E and F curves for the modified Indian prototype digester are shown in Figures 9 and 10. The actual mean residence time was calculated to be about 26 days, or around 0.45 % of the theoretical retention time. Thus, the dead volume-though lower than the case of the Chinese digester-is still considerable. Because of the more complex nature of this digester, being a composite design, the exit-age distribution exhibits a sort of an anomalous shape. More than one peak appear to exist which is indicative of channeling or short-circuiting. Simulation of this type of digester would, therefore, necessitate a more elaborate model involving dispersed plug-flow, channeling and a dead volume.

In essence, and though these tracer studies and their analysis and treatment entail a certain degree of over simplification, they do uncover a very important finding relating to the very large dead volume existent in both types of digesters. Since the inital investment cost is a function of the size of digester, and since only a fraction less than half the volume of the digester is actively

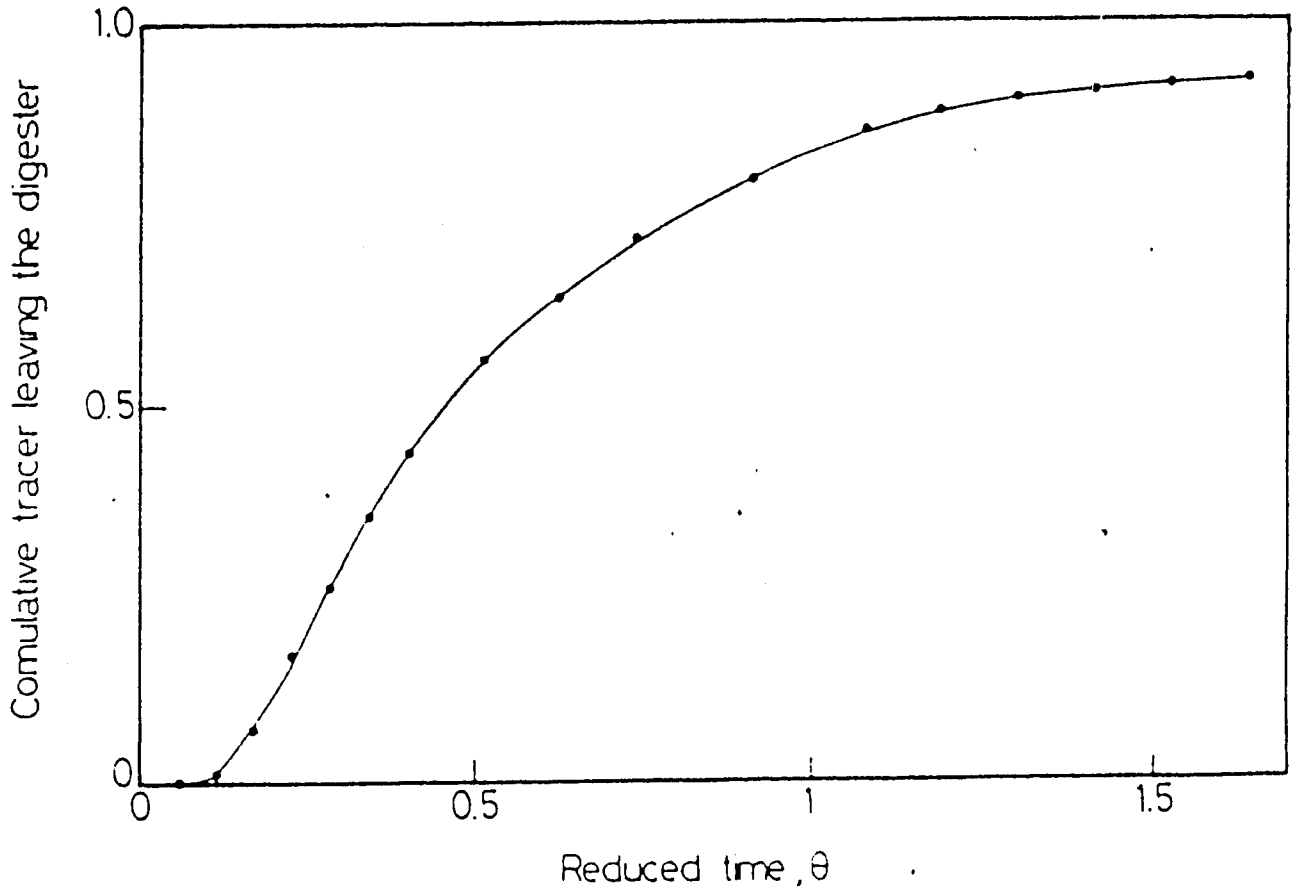

Fig. 8 . The F curve for plastic tracer passing through the Chinese type digester operated at 35.4 days retention time.

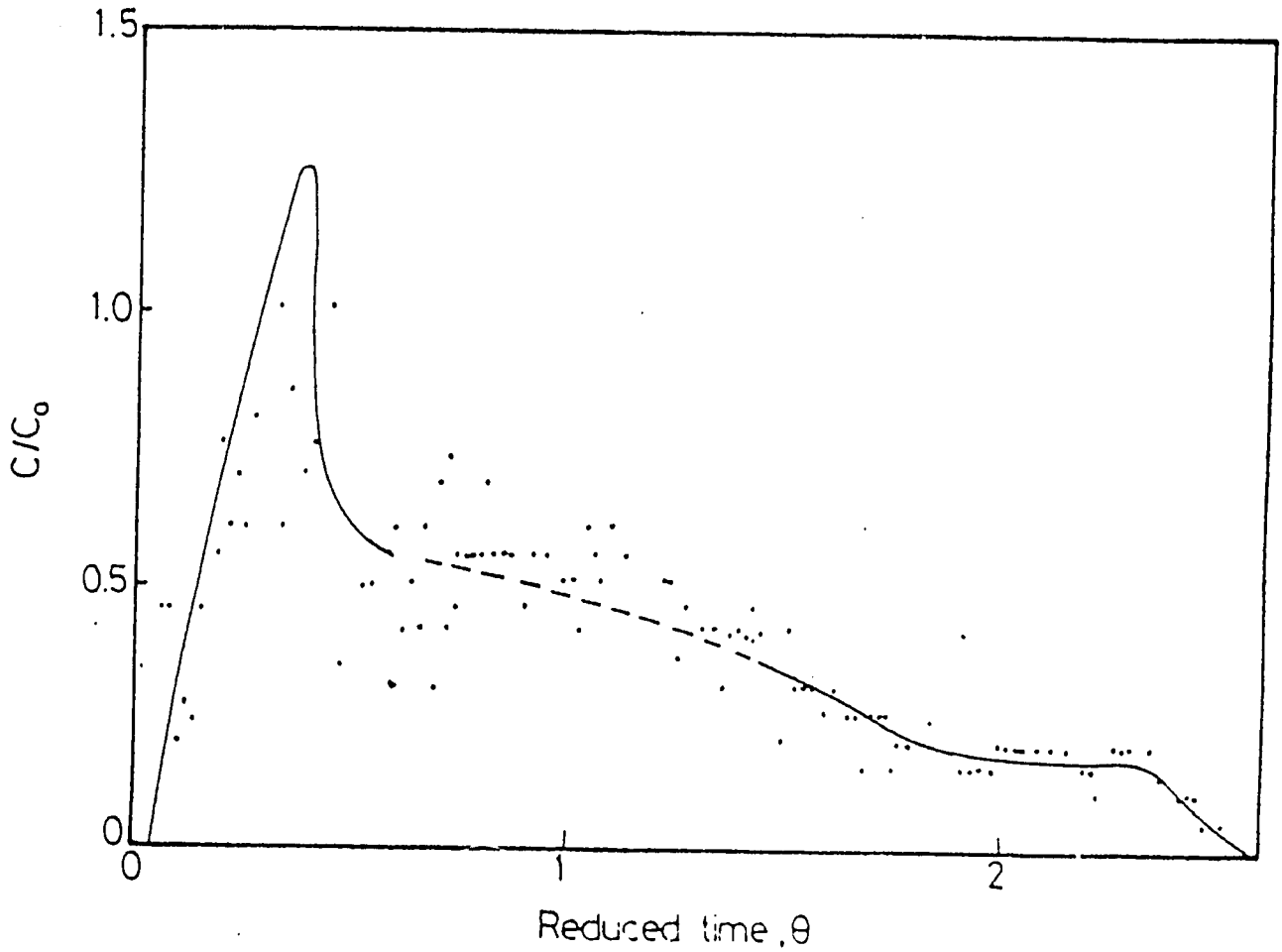

Fig. 9 . Effluent tracer concentration from the Indian type digester operated at 57.5 days retention time .

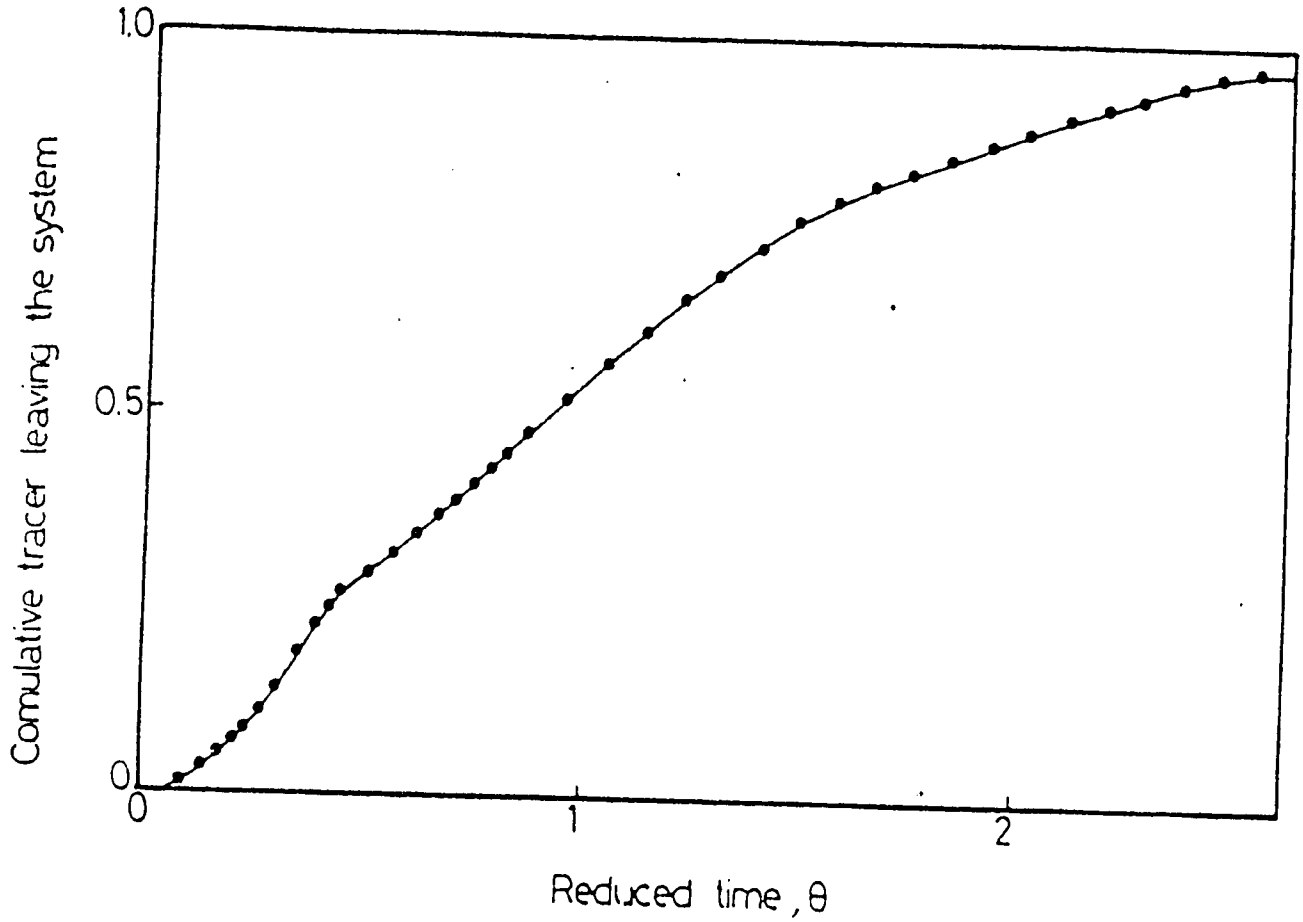

Fig. 10 . The F-curve for plastic tracer passing through the Indian type digester operated at 57.5 days retention time.

utilized, it appears that design modificants are strongly needed to increase the chance of biogas technology propagation in rural areas.

4.6. Suitability of Chinese and Indian tenchnologies for the Egyptian conditions:

The main advatage of these two kinds of technologies is the possibility of constructing small units suitable for the Egyptian rural families. Though, the Chinese type is cheaper than the Indian, it is more difficult to construct and operate.

The major limitation of these types of technologies with regard to their appropriateness and therefore their potential use under Egyptian conditions can be summarized in the following:

1. Fluctuation of the slurry temperature depending on the season. This leads to sharp drop in the gas production rate during winter to less than half its value during summer.

2. The relatively large underground depth needed. This causes constructional difficulties because of the presence of high water table in most of the rural areas. This prevailing high water table, also, decreases the heat insulation capabilities of such digesters.

3. The presence of relatively large dead space which results in lower conversion efficiencies.

4. Both types of digesters requires a comparatively large space for unit construction and effluent treatment, which may be not available in most of the rural houses.

In order to overcome these main difficulties and limitation, two design which may hold good promise are now under development.

The first is what may be called the plug flow digester. This digester is just a horizontal large pipe of concrete or plastic

material as available, with an inlet from one side and an outlet from the other side. The pipe is embedded in the earth. The upper part of the pipe is slurry-free for gas separation. The produced gas can be stored either in rubber tyres or in conventional floating gas holder. The details of the family size unit of this type are illustrated in Fig. 11. The digester can be located totaly under the animal shed and accordingly there will be no need for large free space for its construction. If needed, and specially for large digesters, the unit can be connected with solar heater (or other heating source) for maintaining the temperature at a reasonable level.

The second is the contralled-temperature minidigester of about 1 m^3 volume is estimated to produce about 1 m^3/day, which is sufficient for small rural family. The digester is to be furnished with a solar heater. The heating medium circulates by natural convection. The main advantages of this digester are:

1. A small space area is required for the unit erection.
2. Constant and sufficient gas production during summer and winter season.
3. The high operating temperature would result in an almost complete elimination of parasites and pathogens, thus rendering the effluent suitable for animal feeding.

Thus it can be Concluded that:

- Gas production rates from Chinese and Indian type digesters are almost the same, if operated under the same conditions.
- Sharp drop in slury temperature was noticed during the winter season, and accordingly the gas production rates decreased to less than half those prevailing during the summer season.
- Large dead space was noticed in both types. The mean actual retention times obtained using the pulse tracer technique was found to be less than half the theoretical retention time.
- Two digester designs are proposed to overcome most of the difficulties and limitations associated with both the Chinese and Indian types of technology in the rural Egyptian setting.

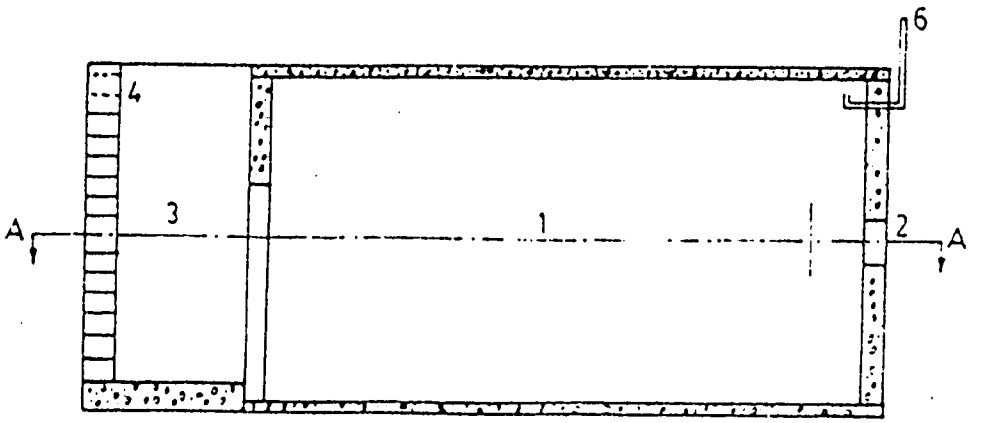

Elevation

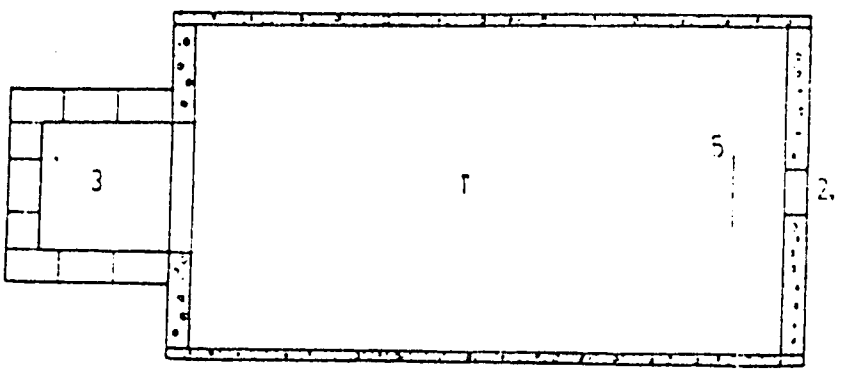

Plan A-A

Fig. 11 . Plug flow digester.

1 - Digester
2 - Inlet pipe
3 - Outlet chamber
4 - Outlet pipe
5 - Buffle
6 - Gas pipe

Annex 5

Work Conducted by the
Fertilizer Evaluation Group
(Soil Microbiology Laboratory)

Yield reponse of wheat to fertilization with biogas slurry and some other fertilizers:

Summary

A field experiment at El-Manawat village was conducted to evaluate the effect of two rates of biogas slurry (5&20 t/fed.) on wheat yield and nutrient uptake as compared to fertilization with farmyard manure and NPK. Nitrogen Fixing Azospirillum was included in the study to evaluate whether it could be stimulated in their N-fixing capacity by the manuring treatments. The obtained results could be summarized as follows:

1. There were no significant differences in yield between the treatment receiving 20 t/fed. of biogas slurry and the NPK treatment.
2. The treatment of biogas slurry at the rate of 5 t/fed. gave almost the same yield increase obtained with the application of 20 t/fed. farm-yard manure.
3. Significant differences in grain yields (at 5% level) have been recorded between the two rates of biogas slurry.
4. The N-uptake by wheat crop was significantly higher in the treatment receiving 20 t/fed. slurry than those ammended with 5 t/fed. slurry or 20 t/fed. farmyard manure. The fertilization with the urea treatment gave insignificant increase in N-uptake compared to 20 t/fed. slurry.
5. The fertilization with 20 t slurry/fed. increased the K-uptake significantly than 20 t farmyard manure or 5 t slurry/fed.
6. The addition of 20 t/fed. slurry increased the P, Fe, Zn, Mn and Cu uptake significantly than did 20 t farmyard manure, 5 t slurry/fed. or NPK treatment.
7. The inoculation with Azospirillum in both fertilized and unfertilized treatments did not show significant increases in the yield or the N-uptake as compared to the uninoculated treatments.

Yield response of wheat to fertilization with biogas slurry and some other fertilizers.

I. Objective:

This study was carried to evaluate the biogas slurry versus other mineral, organic and biofertilizers in relation to their effect on the wheat yield and the uptake of different plant nutrients.

II. Materials and Methods:

A field experiment at El-Manawat village was conducted to study the effect of digested slurry on wheat yield and nutrients uptake (gm/pot) as compared with ordinary farmyard manure and urea. Nitrogen fixing *Azospirillum lipoferum* was included in the study to evaluate whether they could be stimulated in their N-fixing capacity by the manuring treatments. The experiment was carried out using the complete randomized plots at the site of the digester. The plot was 1/800 feddam (5 m^2) and the treatments were replicated four times. The treatments are as follows:

1. Untreated, check plots.
2. Untreated plots + seeds inoculated with *Azospirillum*.
3. 100 Kg urea + 100 Kg superphosphate + 50 Kg potassium sulphate/feddan.
4. 100 Kg urea + 100 Kg superphosphate + 50 Kg potassium sulphate/ feddan + seeds inoculated with *Azospirillum*.
5. 5 tons/feddan biogas slurry mixed with equal quantity of silty soil (Chemical analysis is given in Table 1).
6. 5 tons/feddan biogas slurry mixed with equal quantity of silty soil + seeds inoculated with *Azospirillum*.
7. 20 tons/feddan biogas slurry mixed with equal quantity of silty soil.
8. 20 tons/feddan biogas slurry mixed with equal quantity of silty soil + seeds inoculated with *Azospirillum*.
9. 20 tons/feddan ordinary farmyard manure (Table 1).

Organic manures, superphosphate and potassium sulphate were applied during the preparation of the soil before sowing. Urea was applied in

Table (1): Chemical analysis of organic manures used.

Constituents	Farmyard manure	Spent slurry + silt
Organic carbon %	5.769	12.065
Total nitrogen %	0.583	1.240
NH4-N %	0.015	0.209
NO_3-N %	0.002	0.003
Available phosphorus %	0.016	0.188
Total phosphorus %	0.054	0.354
C/N	9.895	9.731

two equal doses, before the second and the third irrigation (30 and 45 days after planting). Seeds for treatments 2,4,6 and 8 were inoculated by N-fixing Azospirillum. The inoculation was done by coating the seeds with gum arabic and peat carrier with very high density of Azospirillum Cells.

Soil and plant samples were collected periodically from each treatment for chemical and microbiological analysis. The N-fixing Azospirillum were enumerated throughout the growth season. At the time of harvest, the yield of seeds and straw of every plot was recorded. The nutrients uptake (gm/plot) was determined by analyzing the seed yield and the straw for N,P,K,Fe,Mn,Zn and Cu.

III. Results and Discussion:

1. Population dynamics of Azospirillum in soil and thizosphere:

The natural population of Azospirillum in the soil ranged between 9-23 x 10^3 during the plant growth period (Table 2). The inoculation with Azospirillum combined with the use of other fertilizers induced increases in the numbers of this organism in bothe rhizosphere and non rhizosphere soils. The increases were particularly high at the early growth stage of the plants (10-20 days). No specific stimulation has been observed due to the effect of biogas slurry application. The stimulation is likely due to the rhizosphere effect rather than the fertilizer. At the end of the growth season (90 days), the counts of Azospirillum dropped sharply in all the treatments. These decreases in numbers may be attributed to the decrease in root exudates at this late growth period and to the dry condition of the soil at harvest time.

2. Yield response of wheat to fertilization with biogas slurry and some other fertilizers:

Data in Table (3) illustrate the yield response of wheat to the fertilization with biogas slurry, farmyard manure and urea as well as inoculation with N-fixing Azospirillum either separately or

in combination with other fertilizers. The application of all fertilizers including the biogas slurry induced significant increases in both grain and straw yields of wheat. The highest grain and straw yields were recorded in the area treated with the combination of urea and Azospirillum. The fertilization with 5 tons of biogas slurry gave the same yield increase as the 20 tons of farmyard manure. No significant differences in yields have been found between the treatment recieving 20 ton of biogas slurry and that recieving 100 Kg of urea. However, significant differences in grain yields (at 5% level) have been observed between the two rates of biogas slurry application either alone or in combination with N-fixing Azospirillum.

3. Effect of the fertilization with biogas slurry and some others fertilizers on the nutrient contents and uptakes.

Data in Table(4) show that fertilization with urea or 20t slurry increased the nitrogen contents of seed and straw yields over those treatments of 5t slurry, 20 t farmyard manure and the check treatments.

The urea treatment gave insignificant increase in N-uptake (as g/pot) compared to 20 ton slurry treatment. The nitrogen uptake by wheat crop was significantly higher in the treatment receiving 20 ton slurry than those amended with 5 ton slurry or 20 ton farmyard manure. The inoculation of seeds with N-fixing Azospirillum in both fertilized and unfertilized treatments increased the N-uptake insignificantly than uninoculated one. The N contents of seeds (%) and straw of wheat was not affected by the inoculation with Azospirillum.

Data in Table (5) show that the organic manures increased the phosphorus contents in seeds and straw of wheat. The addition of 20 ton slurry/feddan increased the P-uptake significantly than did the chemical fertilizer, 20 ton farmyard manure or 5 ton slurry. The farmyard manure treatment increased the P-uptake significantly as compared to the 5t slurry treatment. The inoculation with N-fixing Azospirillum did not affect the P-content or uptake.

Data in Table (6) show that the fertilization with different manures increased the potassium uptake by wheat over the control. The fertilization with 20 t slurry increased K-uptake insignificantly compared to the routine chemical fertilizer (NPK) and significantly than 20 t farmyard manure and 5 t slurry. The K contents of seeds and strow were not affected by the inoculation with Azospirillum.

Tables (7,8,9 and 10) show the effect of fertilization with biogas slurry and other fertilizer on the Fe,Zn,Mn and Cu contents of wheat. The addion of 20 ton biogas slurry increased the micronutrient (Fe,Zn, Mn and Cu) uptake significantly than did chemical fertilizer, 20 ton farmyard manure and 5 ton biogas slurry. No significant differences in Zn,Mn,Fe and Cu uptake have been found between the treatment receiving 5 ton biogas slurry and that receiving 20 ton farmyard manure. Generally, fertilization with 20 ton biogas slurry was more effective in increasing Fe,Zn, and Mn concentration in wheat grains as compared with routine chemical fertilizer. The inoculation with N-fixing Azospirillum did not affect the micronutrient contents or uptakes by wheat.

Future plan of work:

During the next two years the group will be studying the residual effect of biogas digested slurry in fresh form or after its treatment for longer storage periods. This work will be conducted in parallel pot and field (Omar Makram) experiments. Other chemical and organic fertilizers will be included in the study for comparison.

Also, following up of the fermentation progress in the Omar Makram digesters will be carried from the standpoint of potential fertilizing value.

Table (1) Survival of Azospirillum in soil and rhizosphere of wheat as affected by application of biogas slurry and other fertilizers. (Counts / g. soil)

Time in days	Untreated soil	Fertilization treatments			
		Azospirillum	Azosp.+ urea	Azosp.+ 5t slurry	Azosp.+ 20t slurry
			Soil x 10^3		
10	9	300	400	300	500
20	9	230	220	151	1200
90	23	5	6	11	16
			Rhizosphere x 10^4		
10	5	3300	3100	2100	1500
20	82	1040	3400	1366	4150
90	1	6	3	4	4
			R/S		
10	6	110	77	70	30
20	90	45	150	90	35
90	0.4	1	5	4	3

Table (3): Yield response of wheat to fertilization with biogas slurry and some other fertilizer (Kg/plot)*

Treatments	Straw	Seeds
Untreated soil	6.15	1.3
Soil + Azospirillum	6.75	1.5
Soil + urea	13.60	3.2
Soil + urea + Azospirillum	15.00	3.7
Soil + 20 t FYM	10.30	2.5
Soil + 5 t slurry	10.30	2.3
Soil + 5 t slurry + Azosp.	11.40	2.6
Soil + 20 t slurry	11.40	2.9
Soil + 20 t slurry + Azosp.	11.70	3.2
L.S.D. (1 %)	3.5	0.9
L.S.D. (5 %)	2.6	0.6

* Area of plot 5 m^2 = 1/800 feddan.

Table (4): Effect of fertilization with biogas slurry and some other fertilizers on the nitrogen content and uptake of wheat.

Treatments:	N %		N - uptake ; g/plot		
	Seeds	Straw	Seeds	Straw	Total
Untreated soil	2.48	0.64	31	36	67
Soil + Azospirillum	2.43	0.61	34	39	72
Soil + urea	3.67	0.68	88	82	171
Soil + urea + Azosp.	3.41	0.69	92	85	177
Soil + 20 t FYM	2.95	0.68	62	58	120
Soil + 5 t slurry	2.64	0.64	58	54	112
Soil + 5 t slurry + Azosp.	2.70	0.66	62	58	120
Soil + 20 t slurry	3.20	0.81	82	81	163
Soil + 20 t slurry + Azosp.	3.11	0.78	84	83	168
L.S.D. 1 %			9.6	6.2	13.4
L.S.D. 5 %			6.6	4.3	8.7

Table (5) : Effect of fertilization with biogas slurry and some other fertilizers on the phosphorus content and uptake of wheat.

Treatments:	P %		P - uptake ; g/plot		
	Seeds	Straw	Seeds	Straw	Total
Untreated soil	0.199	0.088	2.39	4.60	6.99
Soil + Azospirillum	0.175	0.093	2.45	5.23	7.68
Soil + urea	0.288	0.099	6.91	11.98	18.89
Soil + urea + Azosp.	0.260	0.098	6.98	11.95	18.93
Soil + 20 t FYM	0.252	0.120	5.30	10.80	16.10
Soil + 5 t slurry	0.219	0.090	4.83	8.15	12.98
Soil + 5 t slurry + Azosp.	0.208	0.090	4.79	8.40	13.18
Soil + 20 t slurry	0.263	0.177	6.83	17.74	24.37
Soil + 20 t slurry + Azosp.	0.273	0.170	7.37	18.05	25.42
L.S.D. 1 %			1.66	2.45	3.18
L.S.D. 5 %			1.22	1.81	2.35

Table (7): Effect of fertilization with biogas slurry and some other fertilizers on zinc content and uptake of wheat

Treatments:	Zn, ppm		Zn-uptake ; mg/plot		
	Seeds	Straw	Seeds	Straw	Total
Untreated soil	30	34	36	180	216
Soil + Azospirillum	28	30	34	173	207
Soil + urea	27	18	64	219	283
Soil + urea + Azosp.	25	18	68	215	283
Soil + 20 t FYM	25	26	53	268	321
Soil + 5 t slurry	24	28	52	260	312
Soil + 5 t slurry + Azosp.	24	27	55	256	311
Soil + 20 t slurry	30	34	77	348	425
Soil + 20 t slurry + Azosp.	28	30	75	327	402
L.S.D. 1 %			8	38	38
L.S.D. 5 %			5	26	26

Table (8) : Effect of fertilization with biogas slurry and some other fertilizers on manganese content and uptake of wheat.

Treatments:	Mn, ppm.		Mn-uptake ; mg/plot		
	Seeds	Straw	Seeds	Straw	Total
Untreated soil	8.7	6.5	10.4	34.0	44.4
Soil + Azospirillum	7.0	5.8	9.8	32.2	42.0
Soil + urea	9.8	3.1	23.6	37.8	61.4
Soil + urea + Azosp.	8.6	3.1	23.3	38.0	61.3
Soil + 20 t FYM	11.8	4.3	24.8	43.2	68.0
Soil + 5 t slurry	11.8	5.1	26.1	46.6	72.7
Soil + 5 t slurry + Azosp.	10.6	5.0	24.4	46.5	70.9
Soil + 20 t slurry	14.1	5.3	36.8	52.9	89.7
Soil + 20 t slurry + Azosp.	13.1	5.3	35.5	56.2	91.7
L.S.D. 1 %			4.8	7.7	10.0
L.S.D. 5 %			3.3	5.3	6.9

Table (9): Effect of fertilization with biogas slurry and some other fertilizers on Cupper content and uptake of wheat.

Treatments:	Cu, ppm		Cu-uptake ; mg/plot		
	Seeds	Straw	Seeds	Straw	Total
Untreated soil	4.6	4.5	5.5	23.5	29.0
Soil + Azospirillum	3.8	4.3	5.3	24.3	29.6
Soil + urea	4.0	2.7	9.6	32.8	42.4
Soil + urea + Azosp.	3.7	2.8	10.0	34.0	44.0
Soil + 20 t FYM	3.5	4.2	7.3	42.0	49.6
Soil + 5 t slurry	3.4	4.7	7.4	43.0	51.2
Soil + 5 t slutty + Azosp.	3.3	4.6	7.5	43.5	51.0
Soil + 20 t slurry	3.7	5.6	9.5	56.3	65.8
Soil + 20 t slurry + Azosp.	3.5	5.5	9.4	57.8	67.2
L.S.D. 1 %			0.7	6.1	6.7
L.S.D. 5 %			0.5	4.2	4.6

Table (10): Effect of fertilization with biogas slurry and some other fertilizer on iron content and uptake of wheat.

Treatments:	Fe, ppm.		Fe-uptake ; mg/plot		
	Seed	Straw	Seed	Straw	Total
Untreated soil	19	-	23	-	-
Soil + Azospirillum	16	-	23	-	-
Soil + urea	18	-	44	-	-
Soil + urea + Azosp.	17	-	45	-	-
Soil + 20 t FYM	16	-	34	-	-
Soil + 5 t slurry	16	-	36	-	-
Soil + 5 t slutty + Azosp.	16	-	36	-	-
Soil + 20 t slurry	20	-	53	-	-
Soil + 20 t slurry + Azosp.	20	-	54	-	-
L.S.D. 1 %			6		
L.S.D. 5 %			4		

Annex 6

Biogas Project

October 1982

Parasites of Health Significance

By

Prof. Dr. M. Adel Abbas Tawfik

Background:

An evaluation of the health risks to man and domestic animals associated with the land application of municipal sludges is very difficult since many factors must be considered. These include the types and numbers of viable stages of parasites present in the sludge that is applied, the amount of sludge applied, the manner in which it is applied, characteristics of the soil, topography of the land, climatic conditions including rainfall and temperature, and the subsequent use of the land. The possibility of transmission to man and animals is greater if they eat fresh vegetables (man) or if they graze directly on land to which sludge has been applied (animals).

The ova and resistant stages of parasites found in sewage and manure generally have a specific gravity greater than one and will settle into sludge during primary sedimentation. The most commonly found stages are the eggs of Ascaris, Toxocara and Trichuris. These are intestinal nematodes that belong to a group that is frequently referred to as the soil-transmitted. In a sense, soil serves as an intermediate host for these parasites because these eggs must undergo a period of development in the external environment, usually the soil, before becoming infective for the next host. The length of this period of development varies depending upon the worm species and the environmental conditions; but it is usually a minimum of two to four weeks. The infective larva develops within the shell of egg and does not hatch from it until ingested by a suitable host. The eggs of these worms are resistant to a wide range of chemical and physical conditions, and are capable of surviving for several years in the soil when environmental conditions are ideal for that purpose.

The eggs of the tapeworms, Taenia sp., Echinococcus granulosus and Moniezia sp. are infective for their intermediate host at the time they are discharged from the gravid segments of the worm. Consequently, unlike the eggs of the soil-transmitted nematodes, when these tapeworms eggs are present in raw sewage or manure they are already infective for the next host.

The oocysts of Eimeria sp., and Toxoplasma are not infective when passed in the faeces of the parasite's definitive host, but require a period of a few days to reach infectivity in the soil. These oocysts are reported to be relatively resistant to a wide range of environmental conditions.

Objectives:-

- Isolation and identification of the most prevailing ova of parasitic worms and oocysts of protozoa before and after the anaerobic digestion process.
- Study the effect of some physical factors and chemical agents on the viability & infectivity of ova of worms and protozoal cysts.
- Study the effect of these inactivation methods on the bacterial flora of the sludge.

Methodology:-

I . Isolation and Idevitification of ova of parasitic worms and oocysts of protozoa.

The methods adopted have been described in the provious report.

II. Physical and Chemical conditions affecting Embryonation of Ascarid Eggs in Vitro.

These studies were carried on fresh uterine eggs. Physical factors, namely, temperature, desiccation, daylight, darkness and depth of water affecting embryonation of eggs were studied. For each of these factors, eggs were incubated at 26-28 °C.

in 3 petri-dishes containing 2% potassium dichromate solution.

To study the effect of some chemical agents, eggs were placed in petri-dishes containing the chemical used and incubated at 26-28 °C. The different chemical compounds used were:

1. Acids and alkali (hydrochloric acid, sulphuric acid, nitric acid and sodium hydroxide).
2. Disinfectants (Phenol, cresol and Pot. permenganate)
3. Insecticides (Dipterex, Seven, D.D.T. and Neguvon)
4. Anthelminties (Piperazine adipate)
5. Inorganic Ferlilizers (Ammonium nitrate, calcium nitrate and calcium superphosphate)

The presented data were obtained from 3 trials for each experiment where 100 eggs from each trial were investigated daily for 2 weeks.

The viability and infectivity of eggs exposed to each physical and chemical treatment were tested by oral infection of mice. The detection of larvae in their liver after infection was taken as an indication of their infective capacity.

Results

I Isolation and Identification of ova of Parasitic Worms and Oocysts of Protozoa:-

A. Manawat Digester

Table 1: Parasites of Medical and Veterinary Importance Detected through the Sludge

Source	Parasite	Stage	No/gm
Inlet	Paramphistomum sp.	ova	8 E.P.G
Outlet	- ve		
Inlet	Ascarid eggs	ova	12 E.P.G
Outlet	" "	ova	8 E.P.G
Inlet	Trichostrongylus sp.	ova	1 E.P.G
Outlet	- ve		
Inlet	Eimeria	cysts	18 C.P.G
Outlet	- ve		

B. Omar Makram Village Digesters:-

Faecal examination for the animals where manure is used in the digestors was done. The preliminary results obtained indicated most of the investigated animals were infested with trematodes mainly. Fascida sp. and paramphistomum sp., Cestodes (Moniezia sp.), nematodes(Toxocara vitulorum and thread worms) and protozoa mainly Eimeria sp.

II. Factors Affecting Embryonation of Toxocara vitulorum Eggs:

1. Physical Factors:

1. Temperature: the results are shown in Table 2.

ii . Desiccation: It had been found that once the water of the embryonating medium was evaporated, the eggs were degenerated within few seconds. The ability of these eggs to develop was not regained even after returning them to water.

iii. Day light: The experiment was carried out in a glass chamber of an incubator of 28°C. The results were shown in table (2).

iv . Darkness: Eggs were incubated in black painted petri-dishes. The obtained results were tabulated in table(2).

v . Depth of Water: Previously boiled water was used in the present study. Table (2) showed the obtained results.

2. Chemical Agents

Tables (3-6) demonstrated the results of the present study concerning the influence of :-

i . Acids and alkali (Table 3)
ii . Disinfectants and Antiseptics (Table 4)
iii. Insecticides(Table 5)
iv . Anthelmintics (Table 5)
v . Inorganic Fertilizers (Table 6)

on the development of *T. vitulorum* eggs.

Table 2 : Physical Factors Affecting Development of Toxocara vitulorum eggs (Percentage of incubated eggs)

Factor	Blastomere 1	2	4	8	16	32	Morula	Gastrula	Larva	D.E.
1. Temperature										
a. 0 C. then	100	0	0	0	0	0	0	0	0	0
26-28 C.	97	2	1	0	0	0	0	0	0	0
b. 4 C. then	100	0	0	0	0	0	0	0	0	0
26-28 C *	8	1	4	0	0	0	0	1	73	13
c. 15 C. then	95	3	2	0	0	0	0	0	0	0
26-28 C.**	8	0	0	0	0	0	0	4	87	1
d. 26-28 C.	7	0	0	0	0	1	1	1	90	0
e. 30 C.	10	0	0	0	0	0	0	2	88	0
f. 37 C.	12	0	0	0	0	5	83	0	0	0
g. 42-44 C.	89	8	3	0	0	0	0	0	0	0
2. Light	9	0	0	0	0	0	0	2	89	0
3. Darkness	7	0	0	[illegible]	0	0	2	3	88	0
4. Depth of water										
a. 2 mm	12	0	0	0	0	0	3	0	85	0
b. 50 mm	15	0	0	0	0	0	0	3	82	0
c. 100 mm	19	0	0	0	0	0	0	2	79	0
d. 150 mm	25	0	0	0	0	0	2	3	70	0
e. 200 mm	33	0	0	0	0	0	0	3	60	4
f. 250 mm	30	0	0	0	0		5	5	59	1
g. 300 mm	35	0	0	0	0	0	0	1	59	5

D.E. = Degenerated Eggs

* After one week exposure

** After 45 days storage

Rest, standard two-weeks conditions.

Table 3 : Effect of Acids and Alkali on the Development of T.vitulorum eggs. (Percentage)

Factor	Blastomere 1	2	4	8	16	32	Morula	Gastrula	Larva	D.E.
1. Hydrochloric acid										
a. 1%	16	0	0	0	0	0	0	2	82	0
b. 5%	27	0	0	0	0	3	3	4	60	3
c. 10%	38	2	0	0	0	1	2	4	53	0
2. Sulphuric acid										
a. 1%	21	0	0	0	0	0	0	0	79	0
b. 5%	35	1	0	0	0	2	3	7	52	0
c. 10%	50	0	0	0	0	0	5	10	35	0
3. Nitric acid										
a. 1%	24	1	1	0	0	0	1	4	69	0
b. 5%	42	0	0	0	0	0	5	10	43	0
c. 10%	59	4	1	0	0	1	1	9	25	0
4. Sod. hydroxide										
a. 1%	20	0	0	0	0	0	0	0	80	0
b. 5%	24	0	0	0	0	0	3	5	68	0
c. 10%	55	2	3	6	0	4	5	10	15	0

D.E. Degenerated eggs

Table 4 : Effect of Disinfectant and Antiseptic on the development of T. vitulorum (%)

Factor	Blastomere 1	2	4	8	16	32	Morula	Gastrula	Larva	D.E.
1. Phenol:										
a. 0.5%	70	22	8	0	0	0	0	0	0	0
b. 1.0%	100	0	0	0	0	0	0	0	0	0
c. 2.0%	100	0	0	0	0	0	0	0	0	0
2. Cresol:										
a. 0.5%	75	24	1	0	0	0	0	0	0	0
b. 1.0%	0	0	0	0	0	0	0	0	0	0
3. Sanitol:										
a. 1%	9	0	0	0	0	0	1	1	89	
b. 2%	12	0	0	0	0	0	0	3	85	
c. 4%	10	0	0	0	0	0	0	1	89	

D.E. Degenerated Eggs.

Table 5:Effect of Insecticides and Anthelmintics on the Development of T.vitulorum eggs (%)

Factor	Blastomeres 1	2	4	8	16	32	Mornla	Gastrnla	Larva	D.E.
1. Neguvon										
a. 1%	12	1	0	1	0	0	2	4	80	0
b. 2%	15	0	0	0	0	0	0	5	80	0
c. 4%	21	0	0	0	0	2	2	4	71	0
2. Dipterex										
a. 1%	18	0	0	0	0	2	1	3	76	0
b. 2%	16	0	0	0	0	0	4	6	74	0
c. 4%	24	0	0	0	0	0	0	2	71	3
3. Sevien										
a. 1%	25	1	0	0	0	0	0	4	66	4
b. 2%	21	0	0	0	0	5	4	5	65	0
c. 4%	26	0	0	0	1	3	5	3	55	7
4. D.D.T.										
a. 1%	18	0	0	0	0	0	7	5	70	0
b. 2%	22	2	0	0	0	0	3	4	63	6
c. 4%	30	0	0	0	0	4	7	7	41	11
5. P.adipate										
a. 1%	15	0	0	0	0	0	1	2	67	15
b. 5%	19	0	0	0	0	0	0	0	60	21
c. 10%	20	0	0	0	0	0	0	0	53	27

Table 6 : Effect of Inorganic Fertilizers on the Development of T. uitulorum eggs (%)

Fertilizer	Blastomeres 1	2	4	8	16	32	Morula	Gastrula	Larva	D.E.
1. Amm. nitrate										
a. 1%	12	0	0	0	0	0	1	3	84	0
b. 5%	13	0	0	0	0	0	6	2	79	0
c. 10%	13	0	0	0	0	1	3	5	78	0
2. Cal. nitrate										
a. 1%	11	0	0	0	0	0	1	2	87	0
b. 5%	11	0	0	0	0	2	3	3	81	0
c. 10%	14	1	0	0	0	3	1	4	77	0
3. Superphosphate										
a. 1%	10	0	0	0	0	0	0	0	90	0
b. 5%	9	0	0	0	0	0	2	2	87	0
c. 10%	12	0	0	0	0	0	0	0	88	0

D.E. Degenerated Eggs

From the present studies, it had been shown that the optimum temperature for the development of T. vitulorum eggs (representing eggs of other ascarids of man and animals) ranged between 26-28 C. While, those kept at 4 C. for 45 days did not show any development, but when these eggs were incubated at 26-28 C., 73% developed to the infective stage. On the other hand, no development took place when fresh unsegmented eggs were submitted to 0 C. for one week and then returned to 26-28 C. Therefore, it can be concluded that T. vitulorum eggs can withstand low temperature till 4 C., while 0 C. is considered a lethal one. Also, temperature of 37 C and 42-44 C. affected the development of these eggs as they did not show any embryonation beyond morula and 4- blastomeres stages respectively even after they were returned to 28 C.

Desiccation was destructive for both embryonated and non-embryonated eggs. While, light or darkness had no effect on the development of T. vitulorum eggs.

Immersion of eggs in previously boiled water at various depths showed declining degrees of development. Therefore, it can be suggested that with the increase of water column, the eggs were deprived from the atmospheric air which may be considered as an essential requirement for the embryonation of T. vitulorum eggs .

It had been noticed that eggs incubated in acids and alkali showed a gradual decrease in the percentages of their development with the increase of the chemical concentration. Phenol and cresol had an ovicidal action on T. vitulorum eggs.

The various insecticides and anthelmintics used had a slight to medium degree of influence on the development of eggs.

The in vitro action of inorganic fertilzers on their development was negligible even at a concentration of 10%.

Proposed Future Plan of Work:

1. Study the effect of physical and chemical conditions on the viability and infectivity of Toxocara as well as other ova and resistant stages of parasites while simulating as far as possible actual digesters conditions.

2. Study the effect of digesting process of sludge upon ova and oocyst under the village condition both in Manawat and Omar Makram.

3. Application of the inactivation methods for the parasitic agents under laboratory conditions in mini-digestors.

Annex 7

Water Pollution Control Lab.

Progress Report

March 1982

INTRODUCTION

The work activities during the last six months can be grouped under the following two headings:-

I. Follow-up of the Fermentation Progress in Prototype "3" Digester and El-Manawat Demonstration Unit.

Follow-up of the occurence and survival of some enteric micro-organisms in the prototype "3" unit at the NRC as well as in the demonstration digester, built at the farmer's house at El-Manawat took place. The inaccessibility of the antisera which was ordered for more than two years now, limited the extent of the planned work relating to the incidence and survival rate of pathogenic organisms. Consequently work was confined to estimating the following parameters: total viable bacterial counts at 22°C and 37°C, total coliform, faecal coliform and faecal streptococci. The results obtained (Table 1) indicated the presence of high counts of the total viable bacteria and the faecal indicators. Therefore, post-treatment of the digested slurry is recommended.

II. Laboratory Studies

Experiments were carried out to investigate the potential for increasing methane production from the anaerobic digestion of manure by mixing it with algae.

II.1. EXPERIMENTAL

Ten laboratory-scale units were operated concurrently. Each was 2.5 litres effective capacity. The units were sealed to the atmosphere with one-hole rubber stoppers on the top, the outlet was connected with rubber hose to a sealed container filled with water acidified with sulfuric acid. The displacement of water in the

second container by the biogas produced in the digester, provided a convesinent method of monitoring the volume of gas production. The experimental set-up is shown schematically in Figure (1). Temperature was maintained constant at 22°C by keeping the digesters in incubators. Mixing of the digester contents was accomplishes by shaking the fermentation units once each day. Starter seed for anaerobic digestion was prepared by allowing for two months. The seed was added to all digesters at the rate of 10 % by volume.

The algae used for these experiments was the green algal species scenedesmus obliquus

II.2. RESULTS AND DISCUSSION

II.2.1. Effect of mixing dry green algae with fresh cow-dung

In an attempl to study the effect of mixing dry green algae with fresh cow-dung on the biogas production different mixtures were prepared, in which the concentration of green algae varried from 0 % to 100 %. Analysis of dry green algae showed that it contains about 96.2 % solids, 2.5 % organic nitrogen and 0.72 % phosphorous. The C/N ratio, based on organic volatile matter was found to be 30.1 (Table 2).

The intial solids content was kept constant at the predetermined optimum concentration (around 8 %), The digastion temperature was 22°C. The results obtained are given in Tables (3,4) and Figure (2).

From the available data, it may be concluded that increasing the concentration of dry green algae in the feed up to 40% increased the volume of methane gas to produced by 27.8 %. However, further increase of dry green algae led to a drop in the valume of methane gas produced.

Reduction in volatile organic matter content after digestion was 53 % at 1 % dry green algae, comured to 70 % when the mixture contains 40 % dry green algae.

II.2.2. Effect of Mixing fresh green algae with fresh cow-dung

The anaerobic fermentation of mixtures conisting of fresh green algae and fresh cow-dung has been investigated. The concentration of green algae varried from 0 % to 100 %. The initial solids content was 8 %. The digestion process was carried out at 22°C.

The results obtained are shown in Tables(5,6) and illustrated grophically in figure (2). From the available data it was found that the amount of methane gas produced was 525 L kg^{-1} VOM rad. when fresh cow-dung was digested. When the mixture contained 40 % green algae, an increase in the amount of methane gas produced by 51 % was recorded. Also an increase in the methane content of the biogas produced from 52.6 % to 55.2 % was obtained.

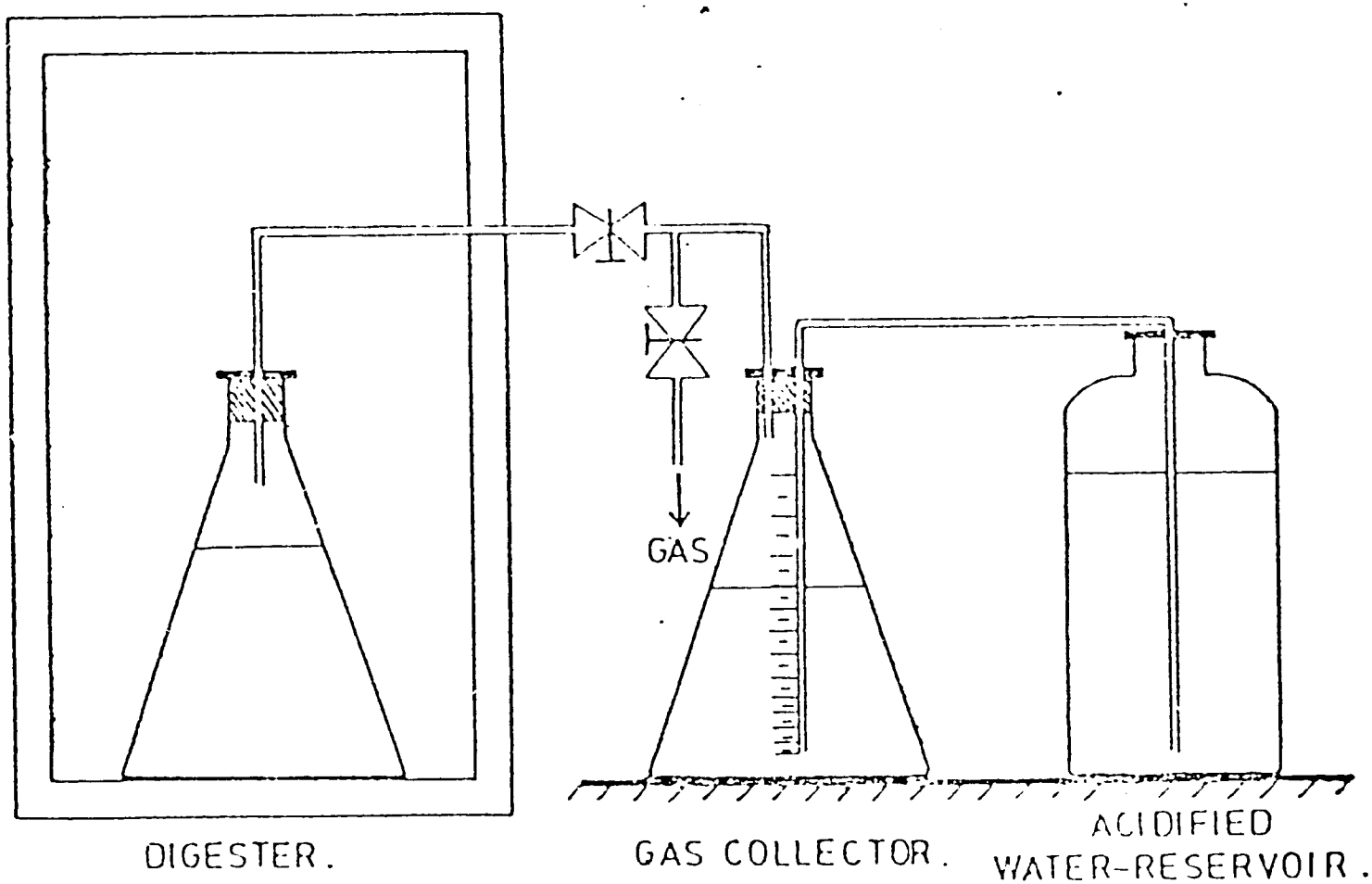

FIG.(1): SCHEMATIC DIAGRAM OF A DIGESTION UNIT ...

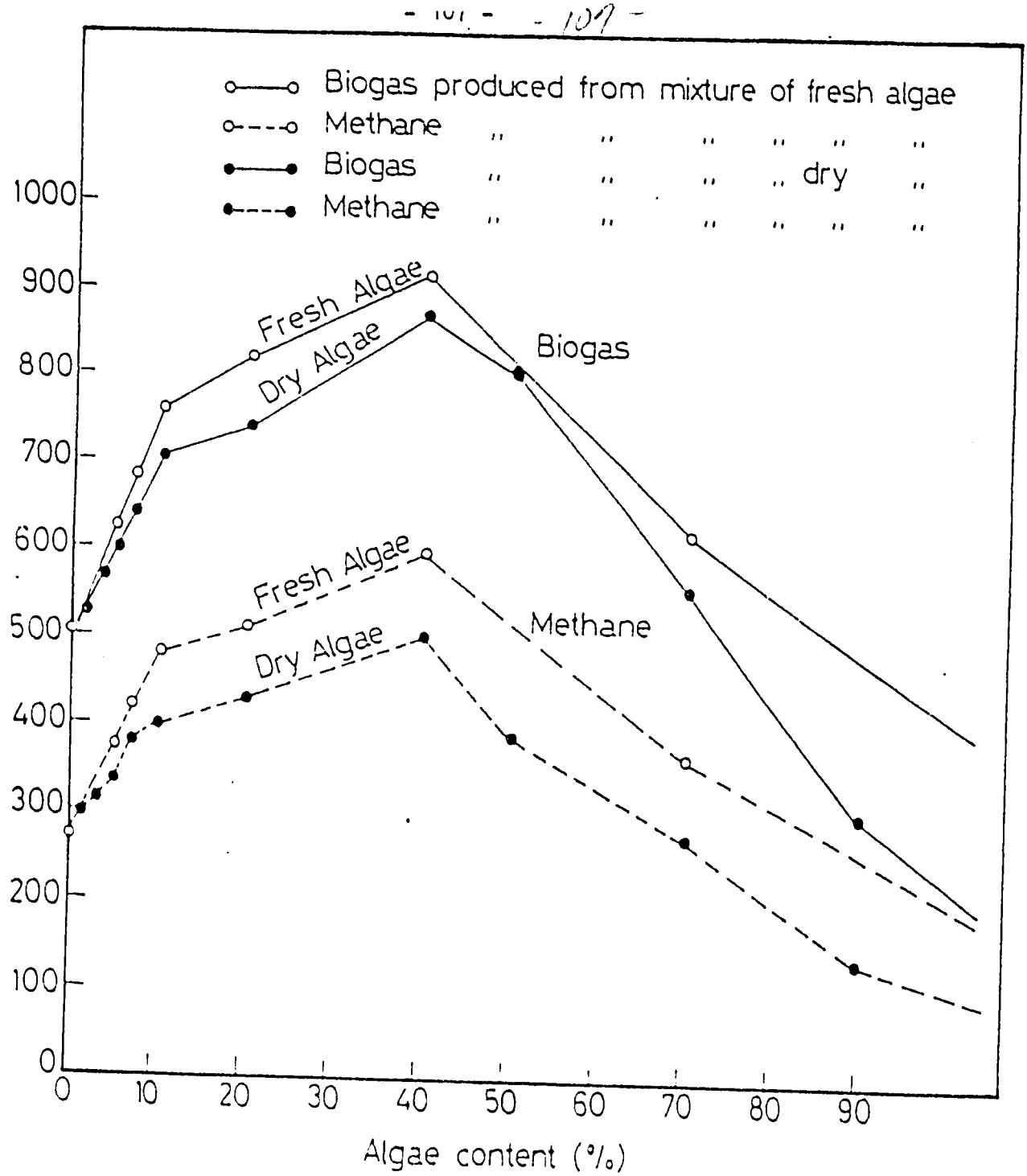

Fig. 2 . Production of biogas from mixtures of fresh cow-dung and algae (fresh & dry).

Table (1) Bacteriological Analysis of the Feed and the Digested Slurry

Date	Source	Total Viable counts at:-		MPN-index/100 gram		
		22°C	37°C	Total coliform	Faecal coliform	Faecal streptococci
20/9/81	Inlet	4.1×10^{11}	2.3×10^{11}	2.2×10^{7}	2.2×10^{7}	2.1×10^{6}
	Outlet	2.4×10^{8}	1.2×10^{9}	1.1×10^{6}	1.1×10^{6}	1.4×10^{5}
17/2/82	Inlet	1.4×10^{11}	9.4×10^{10}	3.48×10^{7}	2.4×10^{7}	$2.[illegible]\times10^{6}$
	Outlet	5.8×10^{10}	8×10^{9}	2.0×10^{6}	2.0×10^{5}	1.3×10^{6}
14/2/82	Inlet	9.1×10^{11}	2.2×10^{11}	9.2×10^{8}	3.2×10^{8}	9.2×10^{6}
	Outlet	7.2×10^{11}	1.2×10^{11}	1.6×10^{8}	5.4×10^{7}	2.4×10^{6}

Table (2) chemical composition of raw materials used

Parameters	Solids Content (%)	Volatile Organic Matter * (%)	Total organic Nitrogen * (%)	Total * Phosphorous (%)	C/N*
Fresh cow-dung	16.10	56.23	0.95	0.78	64.84
Dry algae	96.2	75.2	2.5	0.72	30.1
Fresh algae	37.4	75.3	2.7	0.75	27.9

* Calculated on dry weight basis.

le (3) Production of Methane Gas from the Anaerobic Digestion of Mixtures of Dry Green Algae and Fresh Cow-Dung

	Feed			Digested Slurry						Total bio-gas		Methane		
dry lgae	Solids content gm L^{-1}	VOM gm^{-1}	% VOM	Solids content gm L^{-1}	VOM gm L^{-1}	% VOM	% red. of VOM	Temp C^{o}	D.T. Days	Lkg^{-1} fed	Lkg^{-1} red.	Lkg^{-1} VOM fed	%	Lkg^{-1} VOM red.
0.0	82.3	44.7	54.3	59.6	22.3	37.4	50.1	22	42	512.5	1022.9	270.6	52.8	540.1
1.0	83.4	46.9	56.3	55.7	22.1	39.6	52.9	22	42	531.3	1004.3	294.3	55.4	556.3
3.0	81.7	48.4	59.3	54.0	20.8	38.5	57.0	22	42	568.3	997.0	317.1	55.8	556.3
5.0	83.8	49.6	59.1	53.5	19.8	37.0	60.1	22	42	598.9	996.5	331.8	55.4	533.0
7.0	83.8	50.1	59.7	55.4	19.0	34.3	62.0	22	42	639.9	1032.1	381.4	59.6	615.2
0.0	81.5	49.2	61.4	48.06	18.69	38.89	62.0	22	42	705.3	1137.6	402.7	57.1	649.5
0.0	81.4	51.5	62.3	49.59	18.03	36.35	65.0	22	42	737.8	1135.1	430.1	58.3	661.7
0.0	80.4	51.8	64.4	50.17	15.54	30.97	70.0	22	42	868.7	1241.0	497.7	57.3	711.0
0.0	82.9	54.6	65.83	46.32	18.02	38.9	67.0	22	42	806.5	1203.7	386.3	47.9	576.6
0.0	83.4	56.6	67.82	47.2	20.4	43.2	54.0	22	42	558.8	1034.8	273.3	48.9	506.1
0.0	80.5	56.5	70.20	52.3	28.3	54.1	50.0	22	42	292.6	585 .2	142.5	48.7	285.0
0.0	81.4	61.2	75.2	56.9	36.7	64.5	40.0	22	42	232.1	580.3	113.5	48.9	283.8

le (4) Physico-chemical Characteristics of Raw and Digested Mixtures of Dry Green Algae and Fresh Cow-dung

	Feed							Digested Slurry						
ry lgae	pH	NH_4 mg NL^{-1}	O.N. mg NL^{-1}	T.R. 105°C gm L^{-1}	VOM gm L^{-1}	Phos-phate mg PL^{-1}	V.A. mg L^{-1}	pH	NH_4 mg NL^{-1}	O.N. mg NL^{-1}	T.R. 105°C gm NL^{-1}	VOM gm L^{-1}	Phos-phate mg PL^{-1}	V.A. mg L^{-1}
0.0	8.1	156.9	563.0	82.3	44.7	653.5	285	7.6	418	450	59.6	22.3	651.5	1710
1.0	8.0	168.0	569.0	83.4	46.9	669.5	270	7.4	431	415.3	55.7	22.1	668.1	1755
3.0	7.9	140.0	597.0	81.7	48.4	653.5	254	7.3	416	447.8	54.0	20.8	650.2	1778
5.0	7.9	168.0	765.0	83.8	49.6	637.0	330	7.3	496	596.7	53.9	19.8	636.0	1980
7.0	7.9	159.0	776.0	83.8	50.1	669.5	290	7.2	528	534.1	55.4	19.0	667.2	1830
0.0	7.0	230.0	1620	81.5	49.2	669.5	220	7.1	644	1296.0	48.06	18.69	667.2	1820
0.0	7.1	240.0	1900	81.4	51.5	669.5	212	7.1	840	1539.0	49.59	18.03	658.5	1990
0.0	7.2	240.0	1900	80.4	51.8	609.5	192	6.9	840	1542.0	50.17	15.54	607.5	1880
0.0	7.3	261.0	1600	82.9	54.6	632.0	186	7.1	989	1312.0	46.32	18.02	631.0	1980
0.0	7.3	270.0	1600	83.4	56.6	629.0	156	7.2	1260	1321.0	47.2	20.4	628.0	1300
0.0	7.4	270.0	1690	80.5	56.5	629.0	166	7.3	1260	1651.7	52.3	28.3	629.0	1210
0	7.2	290.0	1750	81.4	61.2	629.0	140	7.1	1029	1702.0	56.9	36.7	629.0	1020

Table (5) Production of Methane Gas from the Anaerobic Digestion of Mixtures of Fresh Green Algae and Fresh Cow-dung

	Feed			Digested Slurry						Total bio-gas		Methane	
% fresh algae	Solids content gm L^{-1}	VOM gm L^{-1}	% VOM	Solids content gm L^{-1}	VOM gm L^{-1}	% VOM	% red. of VOM	Temp C^{o}	O.T. Days	Lkg^{-1} VOM fed	Lkg^{-1} VOM red.	Lkg^{-1} VOM fed	%
0.0	83.26	45.93	55.16	59.6	22.3	37.4	51.4	22	42	514.2	1000.4	270.5	52.0
5.0	81.98	44.97	54.86	54.4	17.4	31.9	61.2	22	42	620	1013.1	366.4	39.1
7.0	83.46	47.2	56.56	52.3	16.0	30.6	64.3	22	42	582	1060.6	417.4	61.2
10.0	81.49	46.51	57.07	92.7	15.8	17.0	66.1	22	42	760	1149.8	479.6	63.1
20.0	80.23	44.13	55.00	50.6	14.5	28.6	67.2	22	42	820	1220.2	510.0	62.2
40.0	83.90	50.34	60.08	47.6	14.04	29.5	72.1	22	42	913	1266.3	595.2	65.2
70.0	83.59	56.01	66.83	47.09	19.5	41.4	65.1	22	42	619	950.8	365.8	59.1
100.0	82.80	62.4	75.4	54.59	34.19	62.6	45.2	22	42	415	918.1	210.8	50.8

Table (6) Physico-chemical Characteristics of Raw and Digested Mixtures of Fresh Green Algae and Fresh Cow-Dung

	Feed									Digested Slurry						
fresh % algae	pH	NH_4 mg NL^{-1}	O.N. mg NL^{-1}	T.R. 105°C gm L^{-1}	VOM gm L^{-1}	phos-phate mg PL^{-1}	V.A. mg L^{-1}	NO_2 mg L^{-1}	NO_3 mg L^{-1}	pH	NH_4 mg NL^{-1}	O.N. mg NL^{-1}	T.R. 105°C gm L^{-1}	VOM gmL^{-1}	Phos-phate mg PL^{-1}	V.A mg
0.0	7.9	107.4	604.2	83.26	45.93	630.9	248	1.6	0.6	7.2	462	578.5	69.6	22.3	629.8	161
5.0	7.5	160.3	746.5	81.98	44.97	620.7	268	0.8	0.90	7.1	707	597.2	54.4	17.4	618.9	103
7.0	7.6	168.3	761.7	83.46	47.20	620.7	244	0.4	1.0	7.0	770	601.7	52.3	16.0	617.8	112
10.0	7.5	176.7	823.0	81.49	46.51	604.5	268	0.2	1.3	7.1	896	666.7	92.7	15.8	602.5	124
20.0	7.2	186.0	907.1	80.23	44.13	604.5	206	nil	1.5	6.9	924	716.6	50.6	14.5	604.5	141
40.0	7.1	220.4	1855.8	83.90	50.34	620.5	206	nil	1.7	6.9	1078	1603.8	47.6	14.04	620.5	164
70.0	7.1	313.4	1888.1	83.59	56.01	20.5	124	nil	1.7	6.9	1106	1667.1	47.09	19.5	619.3	1675
100.0	7.1	322.4	1908	82.80	62.4	6205	124	nil	2.5	6.9	1792	1837.7	54.59	34.9	619.2	1675

Annex 8

The Fundamental Microbiology Group
Progress Report (till.Sept.1982)

One of the objectives of our studies was to asses the activities of the microbial groups, mainly the cellulose decomposers and methanogens, in the anaerobically digested animal manure. Secondly, to search for the so-called promotors of methane productivity in anaerobic digesters.

The previously tried "filter paper coupons" proved to be adequate only for qualitative work, because of the washing step necessary to get rid of extraneous fibers. Therefore cotton textile coupons were used. It gave acceptable consistent results upon mild prolonged washing.

The cotton textile was also treated with 70% H_2SO_4 for 10 seconds followed by thourough washing in order to increase the amorphous phase over the crystalline phase. This treatment did not give better results than the untreated ones for assessing the cellulytic activities. By this technique it was possible to diagnose some of low gas yielding samples, as being low in their cellulytic activities.

In the mean time, trials were done to bring together the components of the microbial consortium of methane production from cellulose on supportive media. Glass wool gave good results for an active consortium which could with stand room temperature storage for one year.

Iron, which was used previously as a scavenger for H_2S, proved to shorten the lag phase of initial gas production, perhaps through reduction of initial dissolved oxygen. The iron sulfide formed is well known for this effect.

The SCUM formed at the top of the digester contained oxygen reactive materials which form a skinny intact layer, which held the fibers more

firmly. The use of floating iron rods might be effective in the maintenance of low oxygen tension and can be used for mechanical scum destruction.

In the present time, the effect of immobilised sulfides of Mo, Ni, Co and Fe is under study as promotors in addition to some of the naturally chelating agents.

Detailed future plans: Oct.1982-March 1983

1. The previous work on the "active consortium culture" will be extended to an adaptation process for low temperature digestion at 20 C.
2. The previously prepared sulfides of trace metals, immobilised in aldehyde-tanned gelatin slabs, will be used as slow-release device in lab. digesters.

   The trace metals are looked at as promotors for cellulose decomposers as well as methanogens, under low and ordinary temperatures (20 C versus 35 C). The lab. digester will be running under the daily "remove and add" regime, in order to simulate field-digester management (RT = 30 days).

   Total volatile fatty acids, acetic acid, total gas and carbon dioxide content of the gas will be monitored daily. Volatile solids will be determined weekly, as well as cellulose.

   These determinations will give a picture showing the particular rate determining step/s to be promoted, such as:
   1. Polymer (cellulose) decomposition.
   2. VFA. conversion to acetic aud.
   3. Methanogenesis of acetic aud.

   The data obtained might explain the results where VFA accumulated and reached a level of 1000 ppm (as acetic acid).

Brief plan for the period Mar.1983-Dec. 1983.

1. The study of adapted consortium from ponds drains and irrigation canals for low temperature digestion and methanogenesis.

2. The study of trace metal promoters and their effect on low temperature adapted cultures.