PD-AAY-657

REPORT

MARCH, 1986

PROJECT DESIGN SAU FORESTRY EDUCATION

DEVELOPMENT: COLLABORATION, STRENGTHENING & EXCELLENCE

March 1 - April 10, 1987

Agricultural Research Project (386-0470)

Delivery Order No.25
(Augmented by D.O. No.34)

Contract No.386-00000-C-00-5039-00

WINROCK INTERNATIONAL
1611 North Kent St.
Arlington, VA 22209

PROJECT DESIGN REPORT

SAU Forestry Education Development:

Collaboration, Strengthening and Excellence

by

Dr. John Gordon
Dr. Arnett C. Mace, Jr.
Dr. Dean Gjerstad
Dr. Charles R. Hatch

USAID/New Delhi, India
March 1987

TABLE OF CONTENTS

SAU FORESTRY EDUCATION PROJECT REPORT

SECTION		PAGE
I.	Executive Summary	1
II.	Introduction and Background	3
	A. Phase I	3
	B. Scope and Objectives	4
III.	Design Team	6
IV.	Project Strategy	7
	A. Concept	7
	B. Model Curricula	7
	C. Forestry Department Faculty	12
	D. Supporting Department Faculty	13
	E. Seed Orchard and Nursery Component	13
	1. Concept	13
	2. Objectives	16
	F. Methods of Goal Achievement	19
V.	Project Implementation	20
	A. Professional Development of Faculty	20
	1. Overseas Experience	20
	2. Continuing Faculty Development	23
	3. U.S. Advanced Degree Programs	27
	4. Indian Advanced Degree Programs	28
	5. Leadership Development	28
	B. Information Base	28
	1. Libraries of SAUs	28
	2. Central Library Role	30
	3. Major Teaching/Research Materials Development	30
	C. Institutional Support	30
	1. Indian Institutions	30
	2. U.S. Institutions	31

SECTION	PAGE
D. Program Creativity	31
1. Workshops and Summer Institutes	32
2. Recognition of Excellence	32
3. Pioneering Projects	32
4. Short-term Leave (Sabbatical)	32
E. Facilities	33
1. Field Facilities	33
2. Laboratory Facilities	36
3. Computational Facilities	37
4. Instructional Facilities	37
F. Coordination of Implementation Activities	37
1. Coordination - India	39
2. Coordination - U.S.	40
G. Project Outputs	41
VI. Monitoring and Evaluation	43
A. Project Management Advisory Committee	43
B. Institutional Evaluation	43
VII. Conditions Precedent to Disbursement	45
VIII. Financial Plan	46
IX. Appendix	
Course Instructional Objectives	

State Agricultural University Forestry Education
Design Team Report

I. EXECUTIVE SUMMARY

India is currently undertaking the largest expansion in forest planting and forestry education and research in the history of the world. Educated foresters at the graduate and postgraduate levels are scarce. Thus, the Indian Council of Agricultural Research (ICAR) is initiating and strengthening forestry departments at all state agriculture universities (SAU). This project design addresses the rapid production of faculty, information and facilities to:

1. Develop 26 SAU forestry departments, 17 granting a B.Sc. Forestry or a B.Sc. Agriculture with an elective in forestry by the end of 1995, each capable of graduating 20 students per year.

2. By the same time, develop 12 departments granting the M.Sc. in forestry and six granting a Ph.D. in forestry to produce future SAU faculty and ICAR and FRI researchers.

A focused model curriculum concentrates on tree crop culture, seed and nursery management, grassland agronomy and genetic tree improvement to produce graduates that serve in state social forestry programs, extension services, and the private sector. Approximately 320 graduates per year are expected by 1995, a number smaller than the conservatively estimated demand.

Forestry department faculty (seven faculty at 17 institutions - four faculty at the remaining nine institutions) will be drawn from other SAU departments and given overseas experience in forestry in one of five subject areas: genetic tree improvement, seed and nursery management, tree plantation management, grassland agronomy and vegetative propagation. Those needing them will pursue advanced degree collaboratively with U.S. institutions or through Indian institutions. Those suited to do so will enter visiting faculty roles in the U.S. Supporting faculty (entomology, pathology, sociology, soils, watershed management engineering and marketing) will be given overseas experience teaching their specialty to forestry students and doing research on forestry-related problems. A continuing development program in India will follow the overseas experience and will stress research and teaching methods as well as continuing improvement in faculty subject matter areas. Approximately 206 department and supporting faculty will receive overseas experience of 12-18 months during the period 1988-1995.

Each SAU forestry department will have an improved library collection to support forestry teaching and a central library will provide service and acquire a complete forestry collection designed by a U.S./Indian team. Also, each department will establish a research and teaching seed laboratory, seed orchard and nursery to provide improved seed and stock to major clients (state forest service, private commercial nurseries and farmers). Field and associated laboratory research and teaching equipment will be provided.

New teaching and research materials will be developed (i.e. woody plant seed manual, tree plantation culture textbook, etc.) by SAU faculty in collaboration with others.

Long-term institutional relationships stressing collaborative degree programs, faculty exchange and collaborative research and teaching projects will be developed with Indian (Forest Research Institute, State Forest Service, Indian Institute of Forest Management) and U.S. institutions. Although the initial SAU programs are strongly focused on tree improvement and tree growing, they will evolve toward a broader resource management curriculum and faculty matched to regional clients needs. They will also evolve toward a synthesis of forestry and agriculture concepts and techniques, and will begin to provide the basic knowledge base for the continued improvement of forestry practice. Institutional ties will aid this evolution.

Coordination and project management will be headed by an Assistant Director General and staff of five within the office of the Deputy Director General (Education), ICAR, New Delhi; U.S. collaboration will be through two educational coordinators, one in India, and one in the U.S., and a core group of five regionally diverse U.S. universities that will provide access to other U.S. forestry programs. A facilitating organization will provide contracting, logistic and supporting services.

The project cost, including both U.S. and Indian government contributions, is 30 million 1987 U.S. dollars, with 14 million dollars of that allocated to faculty development directly, and the remainder for teaching materials and facilities. A separate budget of five million dollars will support project management and facilitation.

II. INTRODUCTION AND BACKGROUND

The proposed project focuses on the second phase of an already initiated long-term effort to develop and strengthen forestry departments at SAUs in India. A unique opportunity exists in India to help achieve the high priority national goal of reforesting wasteland (ca 50 lakh hectares per year) and alleviating rural poverty through the use of social forestry and agroforestry techniques. The SAUs are in a unique position to assist through the education of tree crop specialists and the development and spread of a large portion of the new knowledge needed to speed achievement of these goals. Their long history and great success in improving crops and farming techniques through education, research and services, makes the SAUs a logical venue for new forestry activities aimed at improving the lot of small farmers and the rural environment. The scale of the reforestation effort and the institution building task are unprecedented. Taken together, their intended achievement in less than a decade makes them the largest and most intense science-based forestry activity in the history of the world.

United States' forestry institutions are poised to greatly increase their international involvement, and have the education and research capacity to assist in the rapid development of the large number of new faculty needed, if the Indian efforts are to succeed. Similarly, they will benefit from participation in this largest of world science-based forestry activities through access to Indian expertise and the knowledge base in agroforestry that is rapidly developing there. The U.S. schools as contrasted with forestry schools located elsewhere, are logical partners for India in this activity, because of their similar structure (most are associated with universities in which agriculture has played a major role), their depth of expertise in forest genetics, plantation culture, biotechnology and computer applications, and their great regional diversity. Thus, a "historic moment" exists when rapid achievement of major forestry goals is possible through collaborative effort between Indian SAUs and U.S. forestry schools. This major project describes what needs to be done to seize this moment, and suggests how to proceed over the next seven years.

A. Phase I

The preproject activities included the placement of 18 SAU faculty at U.S. institutions for the academic year 1986-87, and will include the placement of approximately 30 during 1987-88. This project began conceptually with the planning and execution of a workshop in January 1987 to build on experience gained in the first portion of Phase I and to define specific goals for this project. The workshop and discussions with Indian forestry education leaders from ICAR, Ministry of Environment and Forests and Indian Institute of Forest Management form the basis for this report along with experience and literature available to the team.

The project goal is to support the development of 26 SAU Forestry Departments, with 17 granting a B.Sc. Forestry or a B.Sc. Agriculture with elective in forestry, and each with a strong research component focused in social forestry and agroforestry, by the end of 1995, at an approximately total cost of 35 million 1987 U.S. dollars. The nine schools without formal degree programs will teach service courses for other programs and do research in tree crop production and related areas.

B. Scope and Objectives

The design team's official mandate was given in its statement of work as:

A project design team consisting of three ICAR/Government of India representatives and three USAID representatives will formulate a long-term program to develop and strengthen forestry departments at state agricultural universities in India. The formulation of the program is expected to include the following activities:

1. participate in the design and discussion of issues of importance to long-term Indian-U.S. collaboration on forestry education at a workshop to be held in the U.S. and attended by the program design team members and 18 Indian faculty currently undergoing training in the U.S.; and

2. participate in the formulation of program design activities in India which should result in the development and strengthening of forestry education in state agricultural universities in India.

Specific tasks associated with the second activity follow.

In collaboration with Indian program design team counterparts, USAID representatives will:

a. Review and affirm with ICAR/GOI officials the mission's objectives and the scope of SAU forestry education and research programs in India.

b. Develop the staffing patterns, subject matter specializations, staffing numbers, facility enhancements, and a phase-in schedule necessary to meet program needs established in Part a.

c. Evaluate U.S. training options, collaborative activities and Indian training offerings appropriate to development of staff and implementation of forestry education and research programs at Indian SAUs.

d. Identify the U.S. and Indian institutional constraints likely to impact the choice of training options for staff development and determine alternative strategies to offset these where feasible and desirable.

e. Develop criteria for matching of Indian training participants and collaborative activities with U.S. universities for optimum program accomplishments.

f. Develop a schedule, the level of input requirements such as personnel, training, funding support, equipment and facilities development needed for the training and collaborative activities and the associated budget estimate for accomplishment.

g. Identify to the extent possible and summarize in the paper the relevance of forestry education and research at SAUs to:

- Critical issues in India's overall strategy to utilize wastelands, non-arable lands, marginal lands and other fragile ecosystems.

- Strengthen forestry research and education throughout India's forestry institutions.

- India's need to meet natural resource management and extension manpower requirements.

h. Summarize the achievements anticipated at the end of the project.

i. Develop an evaluation and monitoring system to assess progress and to enable adjustments in program consistent with overall goals.

j. Review cost estimates and budget requirements of project components for both GOI and USAID:

- Host country financed in-country costs.
- AID financed ex-country costs.

k. Review, describe and propose the organization and administrative arrangements for the project components and their relation to ICAR and other GOI ministries.

III. DESIGN TEAM

The criteria for selection of U.S. Project Design Team members include:

1. Substantive current or recent experience as a faculty member at a U.S. forestry school associated with an agricultural university.

2. Experience with international forestry development activities and preferably associated with a university currently involved in the training of Indian state agricultural university forestry faculty.

3. Experience in developing, implementing and administering undergraduate and graduate programs conducted at U.S. forestry schools.

4. Experience in biological sciences and preferably associated with tree genetics, tree improvement and tree crop culture.

5. Provide U.S. institutional, geographic and discipline diversity for the design team.

The U.S./GOI design team selected included:

John C. Gordon, Dean, Yale University
Maharaj Singh, Deputy Director General (Education), ICAR
Arnett C. Mace, Jr., Director, University of Florida
Charles R. Hatch, Forestry Advisor, USAID

During the design process, the importance of the nursery component made it prudent to add to the team a specialist in that area:

Dean Gjerstad, Associate Professor, Auburn University

Other individuals consulted during the design period included:
Y.G. Yadhav, Inspector General of Forests, MOEF
J.K. Chaturvedi, Director, IIFM
USAID Personnel
FAO Personnel
World Bank Personnel

IV. PROJECT STRATEGY

A. Concept

The overall project concept (Figure 1) calls for the creation and strengthening of highly focused and specialized departments that are capable of evolving to meet regional and national forestry needs. Thus, the education of B.Sc. foresters will be accompanied by the development of the capacity to educate M.Sc. and Ph.D. graduates to fill faculty and advanced research roles in SAUs, ICAR, forest research institutes and the private sector. The method employed (see Section IV.F) will enhance the Indian capacity for faculty renewal and the creation of new tree culture ideas and teaching materials. By 1995, the SAUs should have a clear world lead in social forestry and agroforestry education and research and should be evolving towards three broad, long term goals:

1. The production of forest resource managers capable of serving "estate management" as well as "farm forestry" clients;

2. The integration of classical agriculture with forestry concepts and methods; and

3. The sustained production of a strong basic science base including personnel and knowledge focused on forest resource management.

In-country and international networks will accelerate the flow of ideas, techniques and materials among SAU faculty and between them and colleagues in other organizations. A formal, continuing evaluation system will provide for goal modification, research and teaching quality control, and the comparative evaluation of SAU forestry and supporting departments to facilitate modification of curriculum and research programs.

B. Model Curricular

A model curriculum for both semester (Figure 2) and trimester (Figure 3) systems has been developed for the B.Sc. Forestry degree program and for a half to one year program of elective course work (Figure 4) for inclusion with any B.Sc. Agriculture program that:

1. draws on existing strengths of SAUs;
2. provides for local modification;
3. supports and is supported by forestry research; and
4. produces graduates ready to enter in-service training with State Forestry Departments and other employers.

Instructional objectives for each forestry and social science course in the curriculum are contained in the appendix.

FIGURE 1. Project concept.

PROGRAM

By 1995 - 26 SAU Forestry Departments with:

*B.Sc.F., B.Sc.A. with "Forestry Electives" or course work focus on applied biology of cultivated forests

*Research focus on tree genetics, seed technology; nursery management; tree crop culture; and grassland agronomy

CURRICULUM

*Responsive to clients changing needs

*Adaptations to new research, knowledge, environment

FACULTY

*7 Dept. Faculty with expertise in forest genetics, tree improvement, tree propagation, nursery management, tree physiology, grassland agronomy, and tree crop culture

*6 Supporting Dept. Faculty with expertise in forest entomology, forest pathology, forest sociology, forest soils, watershed management engineering and forest economics and marketing

FOUNDATION

Professional Development	Creative Research	Institutional Support	Information Base	Facilities

*Networking of Individuals and Institutions
*Professional "esprit de corps"
*Quality Control of Programs

FIGURE 2. Semester B.Sc. Forestry curriculum.

CULTIVATED TREE CROPS (18)

Nursery Management	(3)
Tree Improvement Principles	(3)
Principles of Tree Crop Culture	(3)
Application of Tree Crop Culture	(3)
Focused Forestry Program Electives	(6)

GENERAL FORESTRY (19)

Hist. & Geog. of India For.	(1)
For. Prod. Marketing & Econ.	(2)
For. Management & Policy	(2)
For. Eng.: Roads & Equipment	(3)
For. Watershed Management Eng.	(2)
Social Aspects of Forestry	(4)
Applications of Research Methods	(2)
Forest Management Tour	(3)

BIOLOGICAL FORESTRY (30)

Dendrology	(3)
Forest Soils	(2)
Forest Seed Technology	(2)
Forest Physiology	(2)
Forest Plant Propagation	(2)
Forest Regeneration	(2)
Forest Entomology	(2)
Forest Pathology	(2)
Forest Protection	(3)
Tree Fodder Prod. & Mgt.	(2)
Silvicultural Systems	(2)
Ecosystem Analysis	(3)
For. Ecol. & Measurements Tour	(3)

BIOLOGICAL SCIENCES (21)

Gen. Biol.	(4)
Chemistry.	(5)
Plant Phys.	(2)
Plant Path.	(2)
Plant Prop.	(2)
Econ. Ent.	(2)
Genetics	(4)

PHY./MATH. SCIENCES (23)

Alg. & Trig	(5)
Calculus	(4)
Statistics	(2)
Res. Methods	(2)
Survey & Map.	(4)
Aerial Photo.	(2)
Climatology & Watershed Management	(4)

CROP/ANIMAL CULTURE (19)

Soil Sci.	(3)
Soil/H_2O Cons	(2)
Soil Survey & Land Use	(2)
Livestock Mgt.	(2)
Grassland Mgt.	(2)
Weed and Weed Control	(2)
Horticulture	(2)
Princ. Crop Production	(4)

COMMUNICATION/ EXTENSION (19)

Eng. Grammar & Comp.	(4)
Tech. Writing & Speak.	(3)
Rural Soc.	(2)
Social Dev. Process	(2)
Environmental Psych.	(2)
Land Use Planning	(2)
Ext. & Public Involvement	(4)

NOTE: Numbers in parentheses are semester credits.

FIGURE 3. - Trimester B.Sc. Forestry curriculum.

CULTIVATED TREE CROPS (25)

Nursery Management	(4)
Tree Improvement Principles	(4)
Principles of Tree Crop Culture	(4)
Application of Tree Crop Culture	(4)
Focused Forestry Program Electives	(9)

GENERAL FORESTRY (28)

Hist. & Geog. of India For.	(2)
For. Prod. Marketing & Econ.	(3)
For. Management & Policy	(3)
For. Eng.: Roads & Equipment	(4)
For. Watershed Management Eng.	(3)
Social Aspects of Forestry	(3)
Forest Tribology	(3)
Applications of Research Methods	(3)
For. Management Tour	(4)

BIOLOGICAL FORESTRY (43)

Dendrology	(4)
Forest Soils	(3)
Forest Seed Technology	(3)
Forest Physiology	(3)
Forest Plant Propagation	(3)
Forest Regeneration	(3)
Forest Entomology	(3)
Forest Pathology	(3)
Forest Protection	(4)
Tree Fodder Prod. & Mgt.	(3)
Silvicultural Systems	(3)
Ecosystem Analysis	(4)
For. Ecol. & Measurements Tour	(4)

BIOLOGICAL SCIENCES (30)

Gen. Biol.	(4)
Gen. Chem.	(4)
Biochemistry	(4)
Plant Phys.	(3)
Plant Path.	(3)
Plant Prop.	(3)
Econ. Ent.	(3)
Cytogenetics	(3)
Plant Breed.	(3)

PHY./MATH. SCIENCES (32)

Alg. & Trig.	(4)
Vector Alg.	(4)
Calculus	(4)
Statistics	(3)
Res. Methods	(3)
Survey & Map.	(5)
Aerial Photo.	(3)
Meteor. & Climatology	(3)
Hydro. & Watershed Mgt.	(3)

CROP/ANIMAL CULTURE (28)

Soil Sci.	(4)
Soil/H_2O Cons	(3)
Soil Survey & Land Use	(3)
Livestock Mgt.	(3)
Grassland Mgt.	(3)
Weed and Weed Control	(3)
Horticulture	(3)
Princ. Crop Production	(3)
Dryland Crop Production	(3)

COMMUNICATION/ EXTENSION (27)

Eng. Grammar	(3)
Eng. Comp.	(3)
Tech. Writing & Speak.	(3)
Rural Soc.	(3)
Social Dev. Process	(3)
Environmental Psych.	(3)
Land Use Planning	(3)
Public Involvement	(3)
Ext. Ed.	(3)

NOTE: Numbers in parentheses are trimester credits.

FIGURE 4. Forestry electives for inclusion into a B.Sc. Agriculture curriculum.

FORESTRY ELECTIVES	Semester Credit	Trimester Credit
Nursery Management	2	4
Forest Seed Technology	2	3
Principles of Tree Culture	3	4
Application of Tree Crop Culture	3	4
Tree Improvement Principles	2	3
Total	12	18
STUDY TOUR		
Forest Ecology, Measurement and Management Tour	3	4

FIGURE 5. Examples of focused forestry program electives within a B.Sc. Forestry curriculum.

Courses	Semester Credit	Trimester Credit
ELECTIVE A - Nursery Management		
Advanced Nursery Management	2	3
Advanced Forestry Genetics	2	3
Advanced Social Aspects of Forestry	2	3
Advanced For. Soil and Site Evaluation	2	3
ELECTIVE B - Forest Production and Marketing		
Advanced For. Products Marketing & Econ.	2	3
Adv. Tree Fodder Production & Mgt.	2	3
Minor Forest Products	2	3
Sericulture	2	3
ELECTIVE C - Farmer Forest Measurements and Management		
Forestry Measurements	2	3
Site Quality and Yield	2	3
Forest Planning and Analysis	2	3
Forest Modeling and Analysis	2	3

The biologically focused model curriculum concentrates on educating graduates in seed and nursery management, forest propagation, genetic tree improvement, and tree crop culture integrating fodder production. The professional forestry courses in cultivated tree crops, biological forestry and general forestry are built upon the solid foundation of biological, physical, mathematical and social sciences, communication and extension subject matter.

The intent of the Focused Forestry Program Electives (Figure 5) in the B.Sc. Forestry curriculum is to provide areas of concentration appropriate to state and/or SAU priorities. The examples provided are not all inclusive and others should be developed to meet specific needs. It is recommended that students take all the credits in a single Focused Forestry Program Elective area to develop depth rather than a course or two in several elective areas.

The education and research programs will be flexible to accommodate changing regional clients' needs, but all will:

1. Focus on farmers, wasteland development agencies, state forestry departments and private sector enterprises as clients;

2. Stress the development and transmission of knowledge about cultivated trees, with special emphasis on genetic tree improvement and seed technology and nursery management;

3. Integrate SAU faculty with primary research missions in the All India Coordinated Research Project in Agroforestry (AICRPA).

C. Forestry Department Faculty

The overall design approaches this project by producing a core of at least seven regular faculty plus three AICRPA scientist at each of the 17 institution by 1995 distributed as:

Genetics and tree improvement	2
Seed and nursery management	2
Tree vegetative propagation	1
Tree crop culture	1
Grassland agronomy	1
	7
Agroforestry Research (AICRPA)	3
	10

At each of the nine institutions which offer only forestry elective course work the faculty could be distributed as one in each of the five areas plus three in AICRPA.

The composition and expertise of forestry faculty filling the seven newly created positions of the SAUs' Departments of Forestry are shown in Figure 6. They were developed considering curricular needs, expertise of faculty to be developed and and the need for multiple faculty in tree improvement/genetics and nursery management. Additional consideration was given to education of faculty in supporting departments offering forestry courses as shown in Section IV.D.

D. Supporting Department Faculty

The project design approaches education and research in supporting areas through the use of complementary departments within the SAUs. Supporting faculty drawn from other SAU departments will be strengthened, including:

Soils and microbiology	1
Pathology	1
Entomology	1
Social forestry and rural sociology	1
Marketing and economics	1
Watershed management engineering	1
	6

The composition and expertise of faculty filling the six positions in supporting departments of the SAUs' Departments of Forestry are shown in Figure 7. They were developed considering curricular needs, expertise of faculty to be developed.

E. Seed Orchard and Nursery Component

A tree seed laboratory and experimental and service nursery is to be located at each institution under close faculty direction to:

1. provide faculty and student access to genotypes for research and teaching materials;
2. draw clients into contact with departments;
3. support the use of improved genotypes on farms and wastelands; and
4. integrate with the AICRPA network.

1. Concept

The GOI's high priority on reforestation will require a well-organized and productive seedling production network in order to meet national planting goals. Present low survival rates for outplanted tree seedlings must be drastically improved if reforestation goals are to be successfully met. It cannot be over emphasized that improved seedling survival and growth results from integrating knowledge and technology

FIGURE 6. Composition and expertise of Department of Forestry faculty.

Faculty Member Expertise	Suggested Background Courses Taught	Semester Credit	Trimester Credit
1. Forest Geneticist (Basic forest genetics)	M.Sc. or Ph.D. in plant breeding, genetics or horticulture.		
	Advanced Forest Genetics	2	3
	Tree Improvement Principles	3	4
	Forest Seed Technology	2	3
	Application of Research Methods	2	3
2. Tree Improvement (Applied tree improvement)	M.Sc. or Ph.D. in plant breeding, genetics or horticulture.		
	Forest Regeneration	2	3
	Principles of Tree Crop Culture	3	4
	Site Quality and Yield	2	3
3. Nursery Management (Physiology of seed and trees)	M.Sc. or Ph.D. in horticulture, plant breeding, plant physiology or agronomy.		
	Nursery Management	3	4
	Forest Physiolcgy	2	3
4. Nursery Management (Nutrition and nursery operations)	M.Sc. or Ph.D. in agronomy, soils or horticulture.		
	Advanced Nursery Management	2	3
	Forest Management Tour	3	4
5. Forest Propagation (Vegetative propagation of wood plants)	M.Sc or Ph.D. in plant breeding or physiology, botany or horticulture.		
	Forest Plant Propagation	2	3
	Dendrology	3	4
	History & Geography of Ind. For.	1	2
	Minor Forest Products	2	3
6. Tree Crop Culture (Management and ecology of tree crops)	M.Sc. or Ph.D. in botany, ecology, horticulture, soil or agronomy.		
	Silvicultural Systems	2	3
	Forest Management & Policy	2	3
	Forest Measurements	2	3
	Ecosystem Analysis	3	4
	For. Ecology & Measurements Tour	3	4
7. Grassland Agronomist (Management of fodder in tree crops)	M.Sc. or Ph.D. in agronomy, horticulture, or botany.		
	Application of Tree Crop Culture	3	4
	Forest Protection	3	4
	Tree Fodder Production & Mgt.	2	3
	Adv. Tree Fodder Prod. & Mgt.	2	3

FIGURE 7. Composition and expertise of supporting department faculty.

Faculty Member Expertise	Suggested Background Courses Taught	Semester Credit	Trimester Credit
1. Forest Soils	M.Sc. or Ph.D. in soils science.		
	Forest Soils	2	3
	Adv. For. Soil & Site Evaluation	2	3
2. Forest Pathology	M.Sc. or Ph.D. in plant pathology.		
	Forest Pathology	2	3
3. Forest Entomology	M.Sc. or Ph.D. in entomology.		
	Forest Entomology	2	3
4. Social Aspects of Forestry	M.Sc. or Ph.D. in sociology, rural sociology or agricultural extension.		
	Forest Tribology		3
	Social Aspects of Forestry	4	3
	Adv. Social Aspects of Forestry	2	3
5. Forest Products Marketing & Economics	M.Sc. or Ph.D. in agricultural economics or economics.		
	For. Products Marketing & Econ.	2	3
	Adv. For. Prod. Marketing & Econ.	2	3
	Forest Planning and Analysis	2	3
	Forest Modeling and Analysis	2	3
6. Watershed Management Engineering	M.Sc. or Ph.D. in hydrology, agricultural engineering or soils.		
	For. Watershed Mgt. Engineering	2	3
	For. Engineer.: Roads & Equip.	3	4

from genotype selection and tree improvement through the nursery to plantation establishment. Any errors in this continuum can result in significant survival and growth reductions. In most cases the most influential factor affecting survival and growth is seedling quality. Research will be required to define specific physiological and morphological seedling quality characteristics important to each species. State-of-the-art forest nursery facilities developed at each SAU will facilitate the opportunity for such research in addition to bridging the gap between current nursery practices and new technologies as well as providing an educational and service role. Such technologically advanced nurseries would permit the necessary environmental control to examine an array of methodologies. By relating seedling physiological, root, and morphological characteristics to survival, root regeneration, and initial growth, researchers will be able to define those nursery practices appropriate for operational success. The nurseries close proximity to the SAU will provide unique research, teaching, and learning opportunities for the faculty and students. A most important step in the forest nursery program will be disseminating developed genotypes and information to the public sector. An extension component is critical if the efforts of the research program is to be successful.

2. Objectives

Specific objectives of the SAU Seed Orchard and Forest Nurseries are:

a. develop improved genotypes for the large scale GOI reforestation effort;

b. develop seed orchards, state-of-the-art forest nurseries and appropriate nursery techniques for the production of quality seedlings capable of high survival levels and growth potentials when outplanted;

c. integrate biological and social science research efforts to optimize success opportunities in the reforestation effort;

d. provide faculty and students access to genotypes for research and teaching materials; and

e. provide genotypes and extension programs and materials to the public.

An expanded explanation of each of these objectives follows.

Objective 1: Development of genotypes for the large scale GOI reforestation effort.

The initial step in a successful reforestation program will require the selection of appropriate species. This selection should be based on

several factors including the capability of the species to provide desirable and profitable products. This will require a knowledge of local, national, and international market potentials as well as the desires of the growers. Exotic species must be closely scrutinized for acceptability by growers and markets. If exotic species are planted but later are unmarketable, it is highly probable that these species will become an undesired weed causing more harm that not planting in the first place. Desired genotypes must also be able to survive and grow under given environmental conditions. Controlled environment and field tests will be require to determine environmental effects such as soil and air temperature, water deficit, and soil nutrition, texture and drainage. Lastly, selected genotypes must be easily reproduced in large quantities.

Objective 2: Develop seed orchards, state-of-the-art forest nurseries and appropriate nursery techniques for the production of quality seedlings capable of high survival levels and growth potentials when outplanted.

The initial step will be the development of intensive training and research programs for Indian scientists with U.S. forestry programs specializing in tree improvement and forest nursery management. Since the key component to this program is nursery development, selected U.S. universities should have strengths in nursery technology and administration, seedling quality, tree physiology, tree water relations, root/soil interactions, and soil microbiology. U.S. scientists will also participate in India based programs involving research, teaching, and workshops. Such programs will enhance cross-fertilization of ideas as well as acquaint U.S. personnel with the social and biological aspects of the GOI reforestation program.

Efficient and successful seed orchard and nursery operations depend on well trained technicians. Seed orchard/nursery scientists will develop technical workshops involving practices such as equipment care and operation, irrigation systems, pest management, seed and seedling culture, lifting, and bare root care. Workshops will be scheduled at two year intervals to update senior technicians and to train incoming technicians.

Specific research will be driven by the needs of user groups. This research will examine survival and growth including progeny testing under various environmental conditions; physiological growth manipulation and root regeneration following under-cutting, lifting, and storage; root nodulation and mycorrhizae; and effects of storage and transportation.

Other research and operational needs for an effective seed orchard/nursery complex include:

a. Development of seed production, collection, extraction, testing, storage, stratification and sowing methods. Existing SAU seed testing laboratories should be utilized as much as possible. Additional personnel and funding will likely be required to handle tree seeds at these facilities;

b. Soil testing and adjustments;

c. Nutrition, irrigation, and pest management research; and

d. Development, organization, administration, and scheduling of facilities and personnel;

Objective 3: Integrate biological and social research efforts to optimize success in the reforestation effort.

Strong leadership will be required by SAU administrators to ensure the integration of technological developments with social forestry. Not only must the various biological scientists, i.e., geneticists, physiologists, and soil and pest scientists, coordinate their individual research toward the over-all reforestation goals, but they must develop research within a social framework to ensure acceptance by clients. Regular workshops and conferences should be developed on local, regional, and national levels to encourage exchange between scientists and to provide direction for the reforestation program.

Objective 4: Provide faculty and students access to research and teaching materials.

The seed orchard/nursery complex will allow faculty and students opportunities for hands-on research and teaching materials. This objective must be strongly emphasized since knowledge gained will be transmitted to public and private nurseries involving a broad array of technological sophistication. Since the facility will demonstrate a variety of practices and technologies, researchers and graduates will be able to provide optimal advice to all nurseries.

Objective 5: Provide genotypes and extension programs and materials to the public.

An important service of the SAU seed orchard/forest nursery will be providing improved genotypes in the form of seed, propagules, and seedlings to other public and private forest nurseries. The research conducted at the SAU facility will ensure the selection of appropriate plant materials that will survive and grow when outplanted and will provide the desired products to the grower and public. Extension programs involving written and audio visual materials will be developed for presentation to growers, other nurseries, and tree planters. These programs will emphasize enhancing seedling survival following planting through demonstrated nursery practices and seedling handling, storage, and planting procedures.

F. Methods of Goal Achievement

The methods of goal achievement are:

1. Professional development activities for faculty;

2. Improvement of libraries and the teaching and research information base;

3. Provision of institutional support for SAU departments by in country and overseas institutions with expertise directly related to SAU goals;

4. Fostering of creative research in support of teaching and service through intensive training for students and faculty in research methods, program design and management, and formal recognition of research excellence.

5. Provision of state-of-the-art field, laboratory and computational facilities for education and research.

All methods must be coordinated to create "esprit de corps" within and among departments, and a sense by all participants that the pursuit of excellence is the primary task.

V. PROJECT IMPLEMENTATION

A. Professional Development of Faculty

SAU faculty from forestry and other departments will be strengthened as or transformed into forestry faculty capable of forestry teaching and research by these activities.

1. Overseas experience for SAU faculty in U.S. institutions.
2. Continuing development programs for faculty.
3. Coordinated advanced degree programs with U.S. institutions.
4. Development of advanced degree programs in SAU forestry departments.
5. Leadership development activities (workshops, conferences, communication technology).

Over the period of the project, emphasis will shift from the heavy use of overseas experience and expertise, to substantial reliance on Indian resources supported by strong networking activity.

1. Overseas Experience

In the first year of Phase I, 18 SAU faculty, roughly divided into interest groups in genetic tree improvement and tree crop culture visited and worked for one year at nine U.S. universities on a mixture of course work, research and professional activities. In the second year of Phase I, about 33 SAU faculty will visit and work at U.S. institutions. These faculty will focus on genetic tree improvement (11) and seed technology/nursery management (19), areas of greatest need to meet SAU faculty requirements. This project's faculty visits will begin to occur in the summer of 1988. These will include at least 206 additional forestry faculty and faculty from supporting departments (Table 1).

Overseas experience in the Project will be more focused than that in Phase I. Figure 8 illustrates how this focus will be attained. For forestry and supporting department faculty, based on individual qualifications and institutional needs, the project will provide one of two kinds of in-depth experience in their area of expertise:

a. pre-doctoral
b. post-doctoral

Both options will be at least one year, but will be flexible to allow an additional six months, if needed. In addition, all overseas participants will complete a 6-week summer field module in the U.S. beginning in June as follows:

a. Common campus - Methods
   3 weeks: computation methods
   teaching methods
   research methods

TABLE I. Minimum overseas experience requirements for SAU forestry and supporting departments faculty.

Specialization	Total Needed	Phase I Completed Thur 87-88	Project Needs 88-95	Projects Needs in 88-89	89-90	90-91	91-92
	Number of Individuals						
FORESTRY DEPARTMENT FACULTY							
Forest Genetics	26	10	16	4	4	4	4
Tree Improvement	17	10	7	2	2	2	1
Nursery Physiology	26	10	16	4	4	4	4
Nursery Nutrition	17	10	7	2	2	2	1
Tree Crop Culture	26	11	15	4	4	4	3
Grassland Agronomy	26	0	26	6	7	7	6
Propagation	17	0	17	4	5	4	4
For. Dept. Subtotal	155	51	104	26	28	27	23
SUPPORTING DEPARTMENT FACULTY							
Entomology	17	0	17	4	5	4	4
Pathology	17	0	17	4	5	4	4
Soils	17	0	17	4	5	4	4
Watershed Mgt. Eng.	17	0	17	4	5	4	4
Sociology	17	0	17	4	5	4	4
Marketing & Econ.	17	0	17	4	5	4	4
Sup. Dept. Subtotal	102	0	102	24	30	24	24
TOTAL	257	51	206	50	58	51	47

FIGURE 8. Overseas experience selection, participation and evaluation procedures.

Responsibility	Activity	Timing
ICAR, SAU ↑ IEC ↕ AEC ↓ Host U	INDIA NOMINATION SELECTION ↓ U.S. ACCEPTANCE PROCESS	July - Sept January
AEC ↕ IEC	TRAVEL PLANNING PROGRAM PLANNING COMMUNICATION	March
AEC	SUMMER MODULE: METHODS 1 or 2 LOCATIONS	July
AEC	SUMMER MODULE : FIELD All LOCATIONS	August
Host U ↑ AEC ↕ IEC ↓ ICAR, SAU, Host U	POST-DOCTORAL PROGRAM → RESEARCH OUTPUT LECTURE PLANS TEACHING EVAL. PRE-DOCTORAL PROGRAM → COURSE GRADES RESEARCH PLAN	September June
Host U, ICAR	EVALUATION AND CERTIFICATION	
AEC ↕ IEC	R E T U R N	July

b. Individual host campuses - Field
3 weeks: regional dendrology
ecosystems analysis
field measurements

For this overseas experience, a recommended set of institutions will be sought as U.S. collaborators whose strengths and orientation match Indian SAU needs (Table 2). The U.S. institutions are widely distributed geographically, and diverse in program direction. A number (approximately 11) have a strong international forestry component. The overseas experience of SAU faculty should lead to continuing institution-to-institution, as well as person-to-person professional ties. Each program should be individually structured, but the participants should communicate before and after going overseas, to facilitate both planning and use of the experience. Each SAU participant should return with specific written products (Figure 8) and each should be evaluated and certified by the host institutions. This large project will require careful coordination over the life of the project. A special mechanism for this is described in Section V.F.

2. Continuing Faculty Development

This sub-component provides the opportunity and forms the basis for each of the faculty to build upon their overseas experience. It contains activities for enhanced professional development to provide contemporary instruction and "cutting-edge" research applicable to India. Acceleration of the flow of ideas, new knowledge, techniques and materials among SAU faculty, between faculty and colleagues of other Indian and international organizations are among benefits to be accrued. Also, these activities will provide a stimulus and mechanism for cooperative efforts, professional involvement and building of depth and recognition of the contributions of the forestry departments of the SAUs.

It is proposed that a Working Group structure be implemented to facilitate these continuing faculty development activities. Suggested Subject Matter Working Groups are:

- Tree Genetics
- Tree Crop Culture
- Forest Practices
- Social Science
- Research Methods
- Instructional Methods

Each faculty member would be a member of at least three of the six Subject Matter Working Groups. Development of a newsletter, directory of SAU forestry faculty members, interdisciplinary workshops, institutional agreements, etc. by the Working Groups would compliment the working group activities.

TABLE 2. U.S. universities by geographic region with forestry programs which have strengths appropriate to Indian needs.

SOUTH	WEST	NORTH CENTRAL	NORTH EAST
Arkansas	Arizona	Illinois	Maine
Auburn 1/	California-Berkeley	Iowa State	Massachusetts
Clemson	Colorado State	Michigan	Penn State
Duke	Idaho 1/	Michigan State 1/	Syracuse
Florida 1/	Montana	Minnesota 1/	Vermont
Georgia 1/	Oregon State 1/	Missouri 1/	West Virginia
Kentucky	Washington	Purdue	Yale 1/
Mississippi State 1/			Wisconsin
North Carolina State 1/			
Oklahoma State			
Tennessee			
Texas A&M			
Virginia Polytechnic Institute			

NOTE: 1/ Institutions that combine specific strengths in target areas with a relatively strong parent university and an established international program in forestry.

Following is a description of continuing faculty development activities that working groups could organize. Individual working group members would be the key participants.

a. Summer Institutes: Twenty Summer Institutes are planned with one in each of the Subject Matter Working Groups (alternate years for Research and Instructional Methods) beginning in 1991 to strengthen and add to the expertise of the new forestry faculty members. Thus, five Summer Institutes would be held each year during the five-year period, 1991-95.

Each Institute would be from two to three weeks in length and organized by both an international and Indian consultant with expertise and experience in the Subject Matter Working Group. A second consultant with similar experience and expertise would provide instruction and group sessions. The consultants will generally be members of U.S. and SAU faculties.

Each faculty member would attend one Summer Institute in the individual's Subject Matter Working Group, the Research and Instructional Methods working group and one Subject Matter Working Group closely aligned with the individuals expertise during a seven year period. This activity will be coordinated through ICAR by the ADG (Forestry Instruction).

b. Regional Workshops: One Hundred Five Regional Workshops are planned over the seven year period in the five regions of India. Involvement in professional regional meetings enhances faculty member perspective of other forestry programs including research and instructional priorities and needs, discussion of new ideas and concepts, exchange of information and materials, and development of cooperative programs. These workshops of two to three day duration may be developed on an annual or alternate year basis. For example, within a region, Forest Genetics, Forest Practices and Research Methods may be alternated with Tree Crop Culture, Social Science and Instructional Methods.

The responsibility for organization and conduct of each workshop would be rotated among SAU's within the region to provide for an even distribution of workload responsibility and leadership. This activity will be coordinated through ICAR by the ADG (Forestry Instruction).

Each forestry and supporting department faculty member would attend one regional workshop each year. Cooperating agency personnel and other forestry officials and interested parties would be invited to attend and participate.

c. National/International Meetings: Two hundred fifty seven trips to national/international meetings are recommended to enable each forestry faculty to contribute to and gain from these meetings. An integral part of the development and maintenance of faculty expertise is the contribution to and participation in national and international meetings. The presentation of results of research and/or innovative instruction methodologies and the exchange of information, new techniques and educational materials enhances the capability and contribution of forestry faculty members.

Each forestry and supporting department faculty member would attend one national/international meeting of the individuals choice with approval by the SAU and ICAR during the project. This activity will be coordinated through ICAR by the ADG (Forestry Instruction).

d. Instructional Packages: Twenty instructional packages would be developed by 1995. The development of instructional packages is needed because the existence of major teaching materials relevant to India's species, sites, environments, tree crop management systems and social systems is very limited. Examples of such packages are:

- Woody plant seed manual
- Agronomic tree improvement
- Nursery practices manual(s)
- Tree crop culture systems
- Tree crop culture - quantitative analysis
- Agroforestry principles and methods
- Social aspects of forest tree crop culture
- Tree crop culture research methods
- Tree propagation
- Seed technology principles
- Forest soils and nutrients
- Wasteland reclamation
- Forest disease and their management
- Forest insects and their management
- Forest watershed management engineering
- Modeling integrated crops
- Evaluation of non-forest sites for tree planting
- Water relations of planted trees
- Field measurements of tree crops

This activity will be coordinated through ICAR by the ADG (Forestry Instruction). ICAR, working with a SAU Faculty Committee selected by ICAR, will develop a priority listing of Instructional Packages. Faculty selected by ICAR will be requested to develop these packages based upon expertise and experience. Faculty members may volunteer their services; but

ICAR will determine the author(s) for each priority Instructional Package. These packages may evolve from Summer Institutes and Regional Workshops.

Research Products - Publications: Two hundred fifty seven scientific articles would be submitted and published in nationally or internationally recognized forestry and related journals by 1995. The product of research, are the means by which new knowledge and techniques are disseminated to clients, scientists, forest management personnel and other entities. To encourage publications of research, funds for editorial services and page charges of nationally/internationally recognized forestry and related journals are provided.

These publications are expected to average 8 pages in length. Each forestry and supporting department faculty member will be encouraged to submit at least one publication per year. This activity will be coordinated through ICAR by the ADG (Forestry Instruction).

f. Collaborative Programs: Twenty two collaborative projects with travel and operation funds are provided by the project. Collaborative programs in India and internationally provides the opportunity to enhance productivity through utilization of external expertise and experience. In addition to increase productivity, these programs afford unique opportunities to establish long-term cooperative programs and ties between SAU forestry faculty and other organizations in country (state forest service, wasteland development boards, forest research institutes) and U.S. institutions.

Each of the 17 Forestry Departments is allocated one quality collaborative project selected by the SAU. Five collaborative projects will be allocated on a competitive basis. Criteria for selection of these competitive programs will be established by ICAR working with the SAU's. Selection will be by a peer group appointed by ICAR. This activity will be coordinated through ICAR by the ADG (Forestry Instruction).

3. U.S. Advanced Degree Programs

SAU participants in the "pre-doctoral" track may be able to complete a doctoral degree at a U.S. institution, if desirable, through the completion of a collaborative degree program. While in the U.S. for 12-18 months they will form a committee with Indian participation, develop a program of study, complete prescribed course work, develop a research plan, and pass preliminary doctoral examinations. Upon their return to India, participants will do their dissertation research, complete any additional course work needed, and write their dissertation.

they will then return to the U.S. to undergo final examination and again return to India, to enter the continuing faculty development program. This doctoral track should ordinarily be completed within 5 years from the beginning of the overseas experience.

4. Indian Advanced Degree Programs

Several avenues to advanced degrees in India can be followed by those participants for whom U.S. collaborative degree programs are not desirable or possible. For those who participate in the overseas experience, course work from the U.S. could be transferred to an Indian institution offering the Ph.D., where additional course work and dissertation research guidance could be obtained. Dissertation research could be carried out at their home institutions or collaboratively at an ICAR or ICFRE Institute. Obviously, as the number of Indian institutions offering doctoral work in forestry and related areas grows, those without overseas experience will be able to pursue doctoral degrees wholly in India, through SAUs and collaborating institutions.

5. Leadership Development

The organization and administration of a forestry program that provides a stimulating environment for faculty and student growth and development, attainment of goals and objectives, and responsiveness to state, regional and national needs is highly dependent upon leadership. This leadership for departmental educational and research programs resides primarily with the Departmental Chairman and faculty.

The development of new faculty and departments and/or enhancement of faculty and programs within existing departments requires further development of leadership and administrative skills. This objective can be met through the recommended summer institutes, regional workshops and national/international meetings utilizing existing program or newly developed programs. Figure 9 displays a proposed model for this component.

B. Information Base

Because SAU forestry programs are new, an information base of library collections of existing material, newly prepared teaching and research material, and information exchange technology must be constructed to service each SAU.

1. Libraries of SAUs

Before library collections are augmented, a team of Indian and U.S. specialists will construct a model collection and acquisition strategy to meet the teaching and research goals of the SAUs. Because bringing all 26 SAU libraries to the full model in seven years is

Figure 9. Leadership and administration workshop model.

Regional Leadership Workshop 1/

↓

National Leadership Workshop 2/

↓

National Management and Administration Workshop 3/

1/ All forestry and supporting department faculty attend a leadership workshop.

2/ A representative of the forestry faculty, selected jointly by ICAR and the SAU, from each of the SAUs attend a national leadership workshop to be held at least once every two years.

3/ A representative of the forestry faculty, selected jointly by ICAR and SAU, from each of the SAUs attend a national workshop on management and administration to be held at least once every five years.

NOTE: This activity could be conducted by ICAR's National Academy of Agricultural Research Management, or through workshops offered by Indian Institute of Forest Management, USAID or others.

unrealistic, a "minimum teaching set" will be specified by the team within the full model and each SAU will immediately begin to assemble it. For example, a minimum teaching set could include 20 textbooks and 20 journals subscriptions keyed to required forestry courses taught for the B.Sc. and M.Sc. programs.

2. Central Library Role

The full model will be rapidly assembled in one location from which photoprints of literature requested by SAU faculty can be sent out and other services can be provided. If possible, photoprints will be replaced by electronic query and reply technology.

3. Major Teaching/Research Materials Development

A large number of synthesis publications, video tapes, and slide sets (see Section V.A.2 - Instructional Packages) will need to be prepared and made available to SAU faculty. This will be done as a faculty professional development element, with collaborative assistance where necessary. Some of the synthesis will be used nationally; others will serve only one or a few regions. It will be the task of the Working Groups, ICAR and a SAU Faculty Committee to expand and edit the list in Section V.A.2 - Instructional Packages and to assign priorities and lead authors.

C. Institutional Support

Long-term ties between SAU forestry departments and other institutions are needed to provide teaching and research expertise not available in SAUs, and to open the way for collaborative teaching and research efforts. These institutional ties will provide continuity during the initial period of rapid change in SAUs and will help shape long-term research and teaching directions.

1. Indian Institutions

The most important institutional ties for most SAUs will be to their State Forestry Department and secondarily to the national and regional forest research institutes. The project will provide funding for faculty exchange and collaborative research between SAUs and these institutions. Also, the seed technology/nursery component at each SAU should become a primary point of contact with the State Forestry Department. State Forestry Departments should be drawn upon by SAUs for specialized instruction in forest operations, wood technology and minor forest products. At least for those SAU graduates who enter the State Forest Service, an entry service training program of at least 3 months duration should be developed by the state in cooperation with the SAU.

The ICAR Institutes, as well as the ICFRB Institutes will provide a venue for postgraduate research for advanced SAU students through collaborative degree programs. These should grow naturally from collaborative research between SAU and institute faculty.

2. U.S. Institutions

The project has as one of its primary objectives, the creation of long-term, collaborative ties between SAU forestry programs and U.S. forestry programs. These can provide expertise for continuing faculty development activities such as summer institutes and the preparation of teaching materials. The program provides funds for collaborative research and faculty exchange in areas jointly chosen by SAU and U.S. faculty. Long-term relationships will be facilitated by the coordinating mechanism described in Section V.F. The specific elements of long-term collaboration will include, in chronological order:

a. awareness of opportunities for long-term activity created at summer modules and during overseas experiences;

b. collaborative doctoral programs;

c. U.S. participation through course work and committee membership for SAU faculty seeking doctoral degrees in India;

d. collaborative research arising out of visiting faculty (both department and supporting) experience at U.S. institutions; and

e. further collaborative research and faculty exchange jointly initiated following overseas experience for SAU faculty.

D. Program Creativity

Creativity of programs (instruction and research) is developed through individual efforts and is the essence of productivity and quality. It can be enhanced through recognition of research excellence of faculty and students in universities. Through continued efforts, increased creativity can lead to greater productivity of research and scholars to address India's current and future reforestation, forest tree crop culture and forest management needs and issues.

The project provides an environment for fostering creativity through faculty development opportunities, such as summer institutes and regional workshops, described in Section V.A.2. In addition, recognition of excellence through competitive pioneering projects and short-term leave (sabbatical) is recommended.

1. Workshops and Summer Institutes

Professional development through workshops, summer institutes, etc. provides added expertise to initiate and conduct creative program. A description of these programs is found in Section V.A.2.

2. Recognition of Excellence

Recognition of excellence provides a means to demonstrate or "showcase" creative programs. Through this recognition, new and other faculty may strive to attain the originality and productivity of those being recognized. Consideration should be given to recognition of the outstanding researchers and teachers at each SAU, regional or national level. This activity will be coordinated through ICAR by the ADG (Forestry Instruction).

3. Pioneering Projects

The stimulus of creative pioneering programs focusing on cultivated tree crop culture can be provided through a reward system of enhanced funding of on-going projects of this nature. Recognition and reward through enhanced funding of outstanding pioneering efforts may create an environment for continued high quality program and productivity.

Three awards annually for the period of 1988-91 and five annually for the period 1991-95 are recommended. These awards of 1-3 year duration would be given only on the basis of merit. The following criteria are suggested for consideration:

- project addresses priority issues;
- project builds upon existing pioneering efforts;
- potential for achievement of objectives;
- adequate resources to accomplish project; and
- qualifications of investigator(s).

It is suggested that priority be given to:
- cooperative efforts; and
- interdisciplinary focus.

Projects would be nominated by each SAU and judged by a five member national panel of scientists with national prominence in forestry appointed by ICAR. This activity will be coordinated through ICAR by the ADG (Forestry Instruction).

4. Short-term Leave (Sabbatical)

The short-term leave or sabbatical program provides an opportunity for faculty to gain additional expertise in new areas or techniques, increase knowledge within areas of expertise and increase perspectives and contemporary knowledge. A secondary benefit is increase vigor and enthusiasm for conducting creative programs.

This activity contains a recommendation to support competitive short-term leaves (6 months) for faculty with five years of service to the institution. These funds would be for travel and other project costs with the faculty members salary being the responsibility of the institution.

Criteria for awarding short-term leaves need development, but might include:

- contribution of proposed program to priority needs;
- potential for attainment of program objectives;
- qualification of candidate;
- benefits to faculty member's institution; and
- recommendation of administration.

ICAR, an appointed committee of faculty or another group could serve as a panel of judges to evaluate applicants. This activity will be coordinated through ICAR by the ADG (Forestry Instruction).

E. Facilities

The provision of a basic set of field, laboratory, and instructional facilities is critical to the success of the project. To insure that the opportunity for truly creative and useful faculty research exists, initial facilities provided will emphasize field research, particularly that related to producing quality trees and managing tree plantations and mixed crops. Laboratory facilities should be viewed primarily as supporting field research with quality analytical methods, and secondarily as a complete research environment. The level and kind of transportation support, technical assistance and computational environment should make it relatively easy for faculty to do both on-campus and remote field research, to do their own supporting laboratory analytical work and to statistically analyze their own data. All facilities should be provided to make it simple for faculty to demonstrate "hands-on" field, laboratory and computation techniques to students. Modern audio-visual teaching equipment should be available for teaching and research presentations to emphasize the importance of the effective communication of research results. Regional workshops on research and communication techniques will reinforce the creative use of facilities.

1. Field Facilities

The most important field facility will be the nursery and seed orchard area located on each SAU campus. In addition to those, each campus should have 10 ha of irrigated and 40 ha of non-irrigated experimental area on or near campus.

The objective of the seed orchard/nursery facility is to develop a state-of-the-art nursery capable of altering seedling quality through environmental control.

Nursery Layout:

Careful consideration must be given to the nursery design to ensure maximum utilization for research. Since research is the highest priority at the facility, bed length, soil characteristics, and irrigation design must be carefully considered in order to maximize the area available for replicated studies (Figure 10). Particular care must be taken in examining soils when selecting the bareroot nursery location. The site should be relatively level with good drainage and a coarse textured soil. Clayey and silt soils must be avoided since these are extremely difficult to manage and large portions of the root systems will be lost during lifting.

Structures:

350 m^2 (10x35m) propagation facility, laboratory and cool room
300 m^2 (10x30m) equipment, maintenance and packing shed

Production beds:

0.3 ha containerized beds (produce 150,000 annually)
0.6 ha bareroot beds (produce 100,000 annually on 0.2 ha and 0.4 ha in cover crops; 2:1 rotation)

Major Facilities:

a. Irrigation System - same for bareroot and containers
   - well and pump
   - pipes, valves, sprinklers

b. Equipment - bareroot component
   - Tractor
   - turning plow
   - bed shaper
   - undercutter
   - seed sower
   - fertilizer applicator
   - boom sprayer for pesticides
   - seedling lifter

c. Shading - same for bareroot and containers
   - posts
   - picket fence

Figure 10. Seed orchard and nursery layout

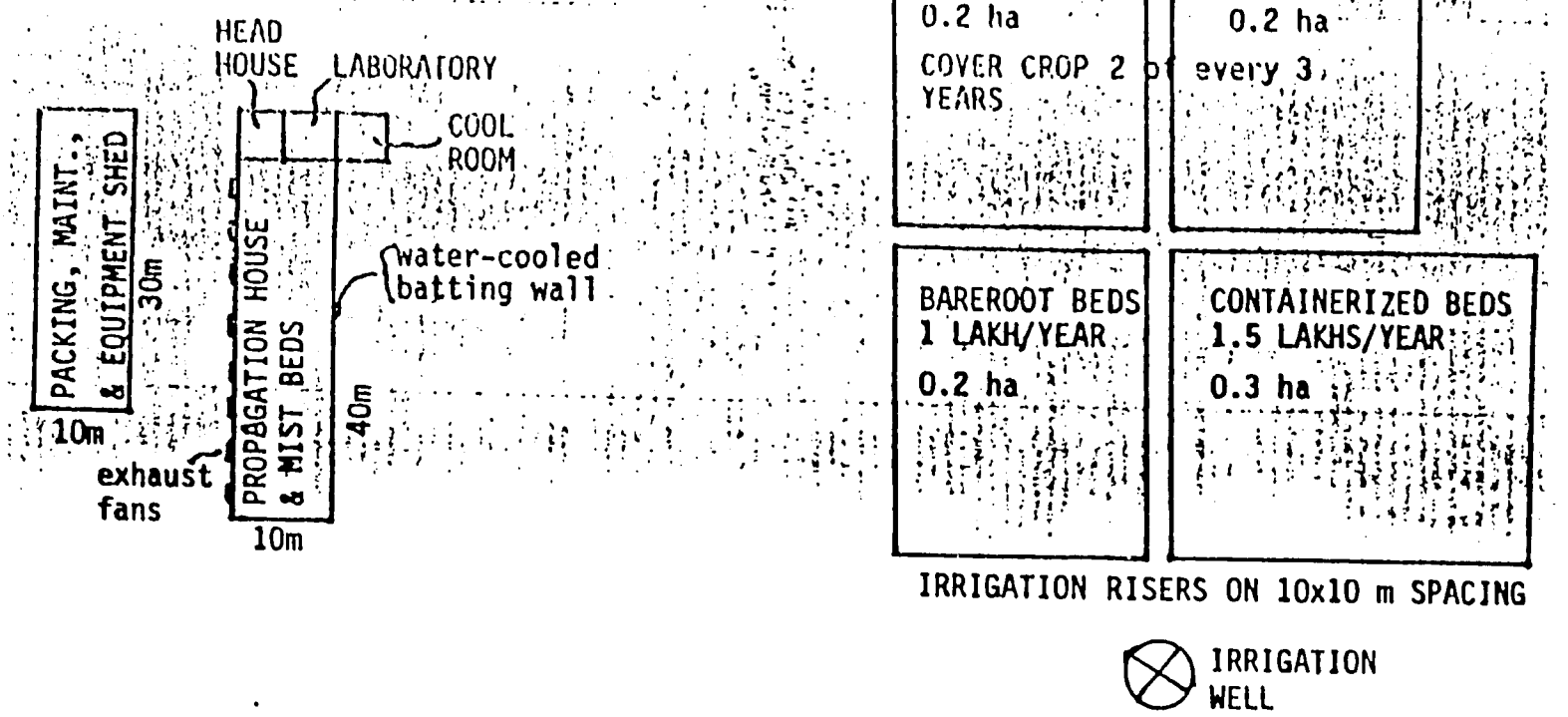

SEED ORCHARD

MINIMUM 5 Ha

IRRIGATED

d. Containerized Operation
   - containers
   - material to elevate containers to encourage root air pruning
   - soil sterilization chamber
   - soil mixer
   - soil filling and sowing equipment

e. Propagation House
   - plastic or glasshouse
   - benches to conduct controlled environment research
   - water system
   - artificial lights
   - cooling system (fans and water cooled batting)

f. Head House
   - bench area for potting, destructive sampling of plants, preparation of propagules
   - cool room for research and short-term seedling storage

g. Packing, Equipment and Maintenance Sheds
   - grading and packing benches
   - maintenance area for tool repair
   - storage area for field equipment

Remote facilities should include service nurseries at regional centers and access to experimental areas including forest, wasteland and on-farm sites.

2. Laboratory Facilities

Where feasible, the seed technology laboratory should be integrated with existing on-campus seed facilities, with incremental equipment and technical assistance needed to handle tree seed provided by the project.

If they are not available elsewhere on campus, basic equipment for the chemical analysis of plants, soils and microbes should be located in forestry laboratories. This equipment should include:

a. balances for coarse and fine weighing
b. forced air drying ovens
c. muffle furnace for ashing
d. ph meters
e. C-N analyzer
f. Kjeldahl apparatus
g. soil analysis equipment (texture moisture holding capacity)
h. refrigerators and freezers for storage
i. high-speed centrifuge
j. spectrophotometer
k. standard glassware and pipettes
l. fume hoods and chemical storage cabinets

Additional equipment should be added as needed for specific research projects.

3. Computational Facilities

At least two microcomputers, with appropriate voltage stabilization and software should be available for faculty use in each of the 17 departments offering B.Sc. degrees in forestry or a forestry elective. Their characteristics should be:

a. IBM PC/AT or compatible with 40 MB Winchester hard disk drive, graphic capability and monitor, and near letter quality 132-column, dot matrix printer; and

b. software to include word processing, spreadsheet, data base, graphics and statistical packages.

4. Instructional Facilities

Classrooms and laboratories capable of handling students (80 graduates and 20 postgraduates) should be available in the forestry department, along with audio-visual equipment and supplies. A basic configuration would include:

a. Classrooms: Three, one capable of seating 80-100, each equipped with screen, 35mm projector, overhead projector, projecting microcomputer and blackboard.

b. Teaching Laboratories: Two, separate from research laboratories, each with 25 work stations equipped with gas, air, suction, sink and locker space, as well as balances, hoods, ph meters, drying ovens, and binocular microscopes.

c. Postgraduate Student Space: Sufficient to accommodate 20 students with desks or study carrels.

d. Audio-visual Equipment and Supplies: In addition to the above, each department requires a 16mm motion picture projector, a video monitor and VCR, backup 35mm and overhead projectors, a 35mm camera and supplies.

F. Coordination of Implementation Activities

Overall coordination is shown in Figure 11. The coordinating mechanism will have characteristics desired by each participant as follows:

FIGURE 11. Project facilitating structure.

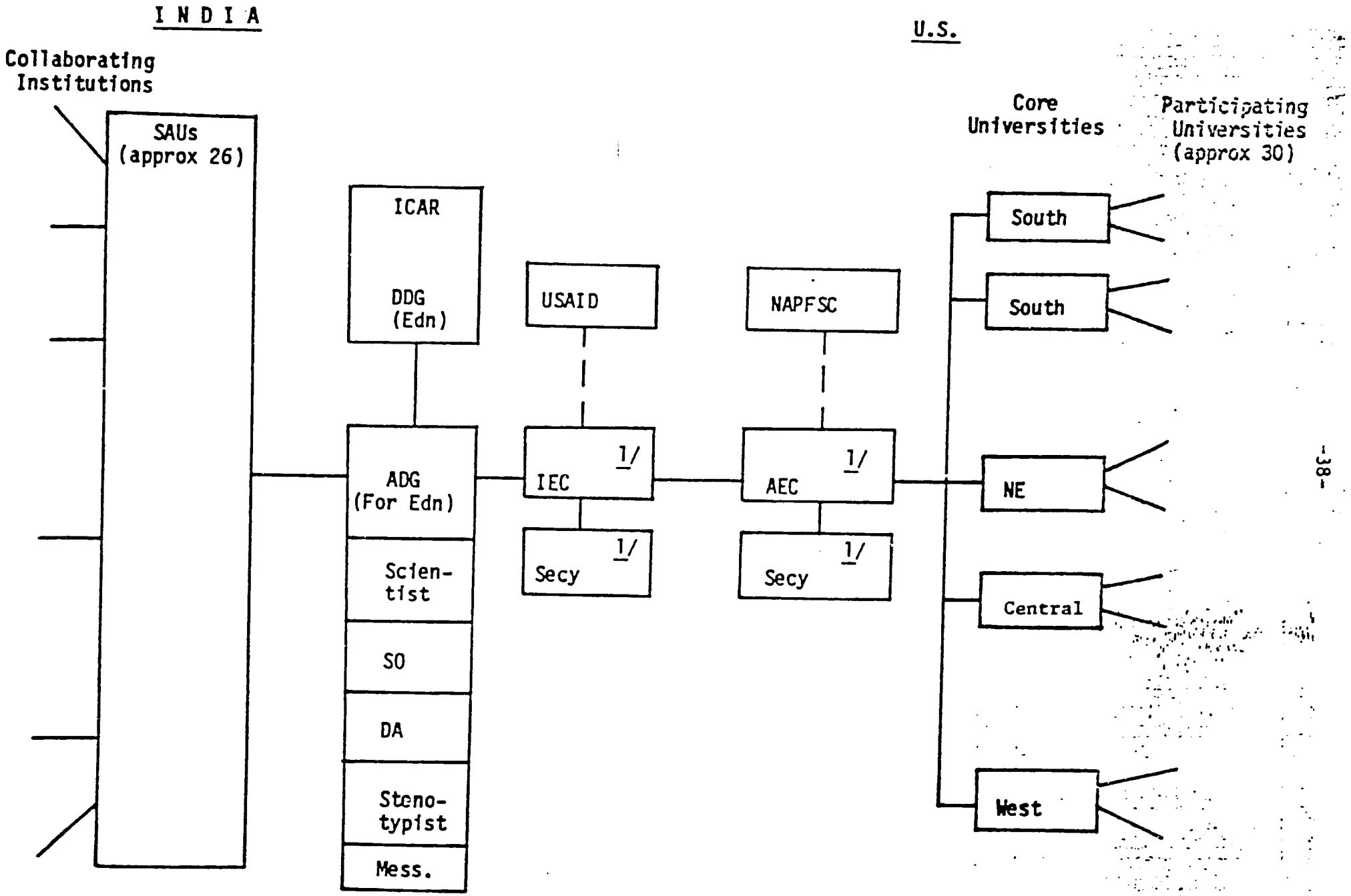

ICAR and SAUs
- access to quality U.S. institutions and faculty;
- U.S. participants with Indian experience and sensitivity to Indian goals;
- depth and rigor in U.S.-based activities;
- long-term institution-to-institution relationships;
- focus on concepts and collaboration rather than "quick fixes"; and
- incentives to strengthen SAUs broadly.

U.S. Universities
- clear definition of program objectives and methods;
- simple financial and logistic arrangements;
- long-term funding (minimum five years);
- careful selection of participants; and
- fit between project and institutional goals.

USAID - India
- one consistent, knowledgeable point of contact; and
- experienced person with good communication skills as primary contact.

1. Coordination - India

A coordinator's office should be established under the responsibility of the Deputy Director General (Education) of ICAR. This office would:

a. facilitate overseas experience through overseeing nomination and selection techniques;

b. assist in scheduling and monitoring continuing faculty development activities;

c. provide liaison among SAUs and between SAUs and collaborating institutions within and outside India;

d. provide uniform written information on project activities to all participating SAUs;

e. coordinate evaluation of project progress; and

f. provide one member of the Project Management Advisory Committee.

This office should include, at minimum:

a. Assistant Deputy Director for SAU forestry programs; provides direct link to DDG (Edn) and SAU administration;

b. Scientist to focus on program substance;

c. Section Officer for forestry education; performs direct coordination and logistic tasks for the project, monitors all project activities;

d. Dealing Assistant for forestry education; prepares documents, facilitates communication;

e. Steno-typist;

f. Messenger; and

g. Equipment, including telephone, telex, photoprint machine and microcomputer with word processing, spreadsheet and data base software.

2. Coordination - U.S.

U.S. participation should be coordinated by an India Education Coordinator (IEC) stationed with USAID - India, and a America Education Coordinator (AEC) stationed at a participating U.S. institution, and a core group of five U.S. university forestry programs located as follows:

South	- 2 institutions
Northeast	- 1 institution
North Central	- 1 institution
West	- 1 institution

These should be drawn from the list on institutions with already developed forestry international programs (Table 2). These institutions, together with a facilitating institution with experience in USAID contracting and operations in India, would form core U.S. participation.

The five core universities would provide long-term continuity and services in the placement of SAU faculty for initial overseas experience and for continuing faculty development activities. They would access the full range of U.S. forestry and supporting programs with expertise related to SAU goals. Each of the five would allocate one-half of a senior position with administrative duties (Dean, Director, Department Head) to the project. An executive committee of the U.S. group would include these five plus the AEC and the IEC. The facilitating organization will provide:

a. contracting and USAID liaison;
b. travel and activity facilitation;
c. presence in India;
d. hiring venue for U.S. project participants; and
e. project accounting and monitoring.

The core universities will provide:

a. peer review of proposals and procedures;
b. academic scope of work;
c. access to other U.S. institutions;
d. direct ties with SAUs;
e. expertise for short courses/workshops;
f. release time for a senior participant at the institution; and
g. longer term commitment to program.

G. Project Outputs

Figure 12 indicates the period of time that various project activities will take place and their expected completion dates.

Figure 12. Timing and expected completion of project outputs.

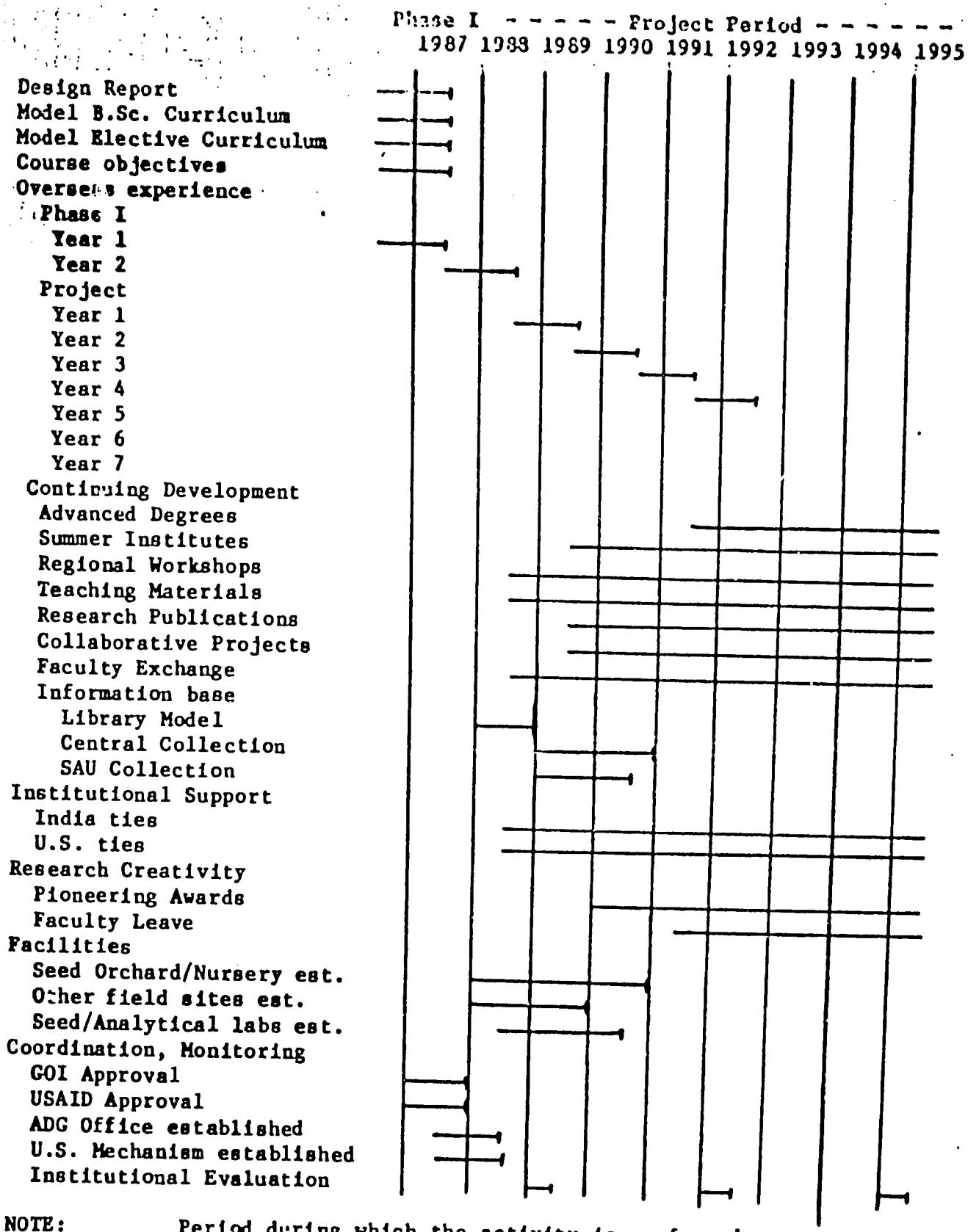

NOTE: ____ Period during which the activity is performed
| Point where the activity is completed

VI. MONITORING AND EVALUATION

A. Project Management Advisory Committee

The project management committee will include:

DDG (Edn) - ICAR, Chairman (or designee)
Resources Management - USAID-India,
ADG (For Edn) - ICAR
SAU representative - two on rotation basis
IEC
AEC

This committee will be responsible for periodic project evaluation and guidance.

B. Institutional Evaluation

The goal of this activity is to develop a framework and mechanism to continue to improve and enhance forestry education and research of the Forestry Department, supporting departments and institution as a whole of the SAU's through an institutional evaluation process.

The specific objectives are:

1. assess and continue to improve the overall quality of professional forestry education and research through periodic self-evaluation; ICAR and peer review by qualified educators, researchers, and practicing foresters; and

2. assure students, agencies and the general public that the Forestry Department, supporting departments and university at large has the facilities and resources to conduct quality research and education programs.

A model mechanism to accomplish the above with two stages or levels, which could occur simultaneously, is shown in Figure 13.

Elements for consideration in evaluation of Forestry Departments and for the proposed SAU Workshop on Program Evaluation include:

a. program goals, objectives and policies;
b. curriculum content to meet goals and objectives;
c. organization leadership and administration of the program;
d. student qualification;
e. strength of supporting departments and institution;
f. institutional support, facilities and resources;
g. research focus and productivity; and
h. service.

Figure 13. Evaluation process.

Stage or Level I Process

Research		Education	
Project Proposal	Program of Dept.	Course Proposal	For. Curriculum
↓	↓	↓	↓
Dept. Faculty Res. Comm.	Dept. Faculty Res. Comm plus Dept. Adv. Comm. Chairman	Dept. Faculty Curr. Comm.	Dept. Faculty Curr. Comm.
↓	↓	↓	↓
Dept. Chm.	Dept. Chm.	Dept. Chm.	Dept. Chm.
↓	↓	↓	↓
Dean for Res.	Dean for Res.	Dean for Res. Inst.	Dean. for Res. Inst.
↓	↓	↓	↓
Approval, Mod. or Denial	I C A R	SAU Curr. Comm.	SAU Curr. Comm.
	↓	↓	↓
	Approval, Mod. or Denial	Approval, Mod. or Denial	I C A R
			↓
			Approval, Mod. or Denial

Stage or Level II Process

SAF Accreditation Committee Personnel → SAU Workshop on Program Evaluation

↓

Development of Evaluation Process
- A. Self Evaluation - Annual
- B. Peer Review - 3rd year
  - 5 year frequency

↓

Implementation by Assoc. of SAU's or other organizations

Assessment based upon the total environment for stimulating intellectual development and growth recognizing institutional difference and responsiveness to state, regional and national needs is encouraged. A challenging, imaginative program that enhances the faculty and students understanding of concepts, principles and application of new science and technologies is highly desirable.

This model incorporates a self-evaluation and peer evaluation process and suggests an implementation body. This may be adjusted to meet Indian needs; but the incorporation of self and peer evaluation implemented by an existing or new organization is strongly encouraged to continued improvement of research and instruction programs and assurance of quality control. It is also important to develop and implement a continuing process and mechanism for institutional evaluation.

VII. CONDITIONS PRECEDENT TO DISBURSEMENT

1. The second year of Phase I sends approximately 30 SAU faculty to U.S. for experience focused in tree improvement and nursery management.

2. ICAR establishes and staffs an ADG (Forestry Education) office under the DDG (Edn).

VIII. FINANCIAL PLAN

Project Component	USAID	GOI	TOTAL
	- U.S. Dollars in '000 -		
A. Professional Development of Faculty			
1. Overseas Experience			
104 For Dept fac @ 15mo @ $3300/mo	5,148		
102 Sup Dept fac @ 15mo @ $3300/mo	5,049		
Subtotal	10,197	0	10,197
2. Summer Institutes			
Operating Costs			
20 Inst @ $10000/Inst		200	
Indian Instructors			
20 Inst @ 1.5 fac/Inst @ $500/fac		15	
U.S. Instructors			
20 Inst @ 1.5 fac/Inst @ $6000/fac	180		
Subtotal	180	215	395
3. Regional Workshops			
105 Reg Workshops @ $1000/workshop	0	150	150
4. National/International Meetings			
97 Intl Meet participants @ $1500/meet	145		
160 Nat Meet participants @ $500/meet		80	
Subtotal	145	80	225
5. Instructional Packages			
Preparation Costs			
20 pkgs @ $15000/pkgs	100	200	
Indian Participants			
20 @ 3 ind @ 3 visit @ $500/visit		90	
U.S. Instructors			
10 @ 1 ind @ 3 visit @ $6000/visit	180		
Subtotal	280	290	570
6. Research Products - Publications			
257 Intl Jour articles @ $250/art	64	0	64
7. Collaborative Programs			
With Indian Institutions			
11 projects for 5 yr @ $10000/yr		550	
17 projects for 7 yr @ $2000/yr		238	
With U.S. Institutions			
11 projects for 5 yr @ $20000/yr	1,100		
11 projects for 5 yr @ $7500/yr		412	
Subtotal	1,100	1,200	2,300

Project Component	USAID	GOI	TOTAL
	- U.S. Dollars in '000 -		
8. U.S. Advanced Degree Program			
10 individuals @ $20000/ind	200	0	200
9. Indian Advanced Degree Program			
20 individuals @ $7500/ind	0	150	150
10. Leadership Development Workshops			
10 Reg Leadership Wksh @ $2000/wksh		20	
4 Nat Leadership Wksh @ $5000/wksh		20	
2 Nat Mgt & Admin Wksh @ $10000/wksh		20	
Subtotal	0	60	60
B. Information Base			
1. Central Library			
Foreign acquisitions	800		
Indian acquisitions		300	
SAU photoprint service		300	
Subtotal	800	600	1,400
2. SAU Library Acquisitions			
26 Univ @ 20 bks @ $40/bk	21		
26 Univ @ 20 jour @ 7 yr @ $50 jour	182		
Subtotal	203	0	203
C. Program Creativity			
1. Recognition of Excellence			
26 awards @ $500/award	0	13	13
2. Pioneering Projects			
26 projects @ 2 yr @ $2000/yr	0	104	104
3. Short-term Leave			
17 SAUs @ 2/SAU @ $1000	0	34	34
D. Facilities			
1. Field Facilities			
Seed/Nursery Exp. Area			
17 SAUs @ 50 ha @ $5000/ha		4,250	
9 SAUs @ 10 ha @ $5000/ha		450	
26 seed/nursery build @ $30000/build		780	
Foreign Equip - 26 SAUs @ $10000/SAU	260		
Domestic Equip - 26 SAUs @ $10000/SAU		260	
Subtotal	260	5,740	6,000

Project Component	USAID	GOI	TOTAL
	- U.S. Dollars in '000 -		
2. Laboratory Facilities			
Lab Building - 17 @ $25000/build		425	
Foreign Equip - 17 SAUs @ $90000/SAU	1,530		
Domestic Equip - 17 SAUs @ $35000/SAU		595	
Subtotal	1,530	1,020	2,550
3. Computational Facilities			
43 PC computers @ $10000/comp	430	0	430
4. Instructional Facilities			
classroom Building - 17 @ $50000/build		850	
Foreign Equip - 17 SAUs @ $5000/SAU	85		
Domestic Equip - 17 SAUs @ $3000/SAU		51	
Subtotal	85	901	986
E. Salaries			
257 faculty @ 7 yr @ $2100/yr		3,778	
ADG (For Edn) Office		88	
Subtotal	0	3,866	3,866
TOTAL	15,474	14,423	29,897
Technical Support and Program Management	5,000	0	5,000
GRAND TOTAL	20,474	14,423	34,897