PD-AAW-696

AGENCY FOR INTERNATIONAL DEVELOPMENT
WASHINGTON, D.C. 20523

DATE: 6/26/87

MEMORANDUM

TO: AID/PPC/CDIE/DI, room 209 SA-18

FROM: AID/SCI, Victoria Ose

SUBJECT: Transmittal of AID/SCI Progress Report(s)

Attached for permanent retention/proper disposition is the following:

AID/SCI Progress Report No. 4.180
First Quarterly Report
Nov 19, '85 — May 19, 1986

Attachment

1 cy

4.188

First Quarterly Report
Nov. 19, 1985 - May 19, 1986

Grant No. DPE-5542-G-SS-4057-00

RESEARCH AND DEVELOPMENT OF SOLAR-POWERED DESICCANT REFRIGERATION FOR COLD-STORAGE APPLICATIONS

Illinois Institute of Technology
Chicago, Illinois

and

Asian Institute of Technology
Bangkok, Thailand

This first report includes

1. An analysis of conditions and requirement in Thailand prepared by AIT, Bangkok.

2. Simulation of an integrated Hybrid-Desiccant Cooling System prepared by IIT, Chicago.

RESEARCH AND DEVELOPMENT OF SOLAR-POWERED DESICCANT REFRIGERATION FOR COLD-STORAGE APPLICATIONS

(Grant No. DPE-5542-G-SS-4057-00)

by

Asian Institute of Technology
P.O. Box 2754, Bangkok 10501
Thailand

TABLE OF CONTENTS

I. REQUIREMENTS OF COLD STORAGES IN THAILAND

1.1 Introduction 1
1.2 Fish and Meat Production 2
1.3 Requirement of Refrigeration 2
1.3.1 Removal of field heat of agricultural produce 3
1.3.2 Short term general storage 3
1.3.3 Milk chilling 3
1.3.4 Fish storage using ice 4
1.3.5 Long term chilled storage 4
1.3.6 Long term frozen storage 4
1.3.7 Medical and pharmaceutical storage 4
1.4 Need for Cold Storage in Thailand 5

II. CLIMATOLOGY OF THAILAND

2.1 General Information 14
2.1.1 Climatology 14
2.1.2 Temperature 14
2.1.3 Relative Humidity 14
2.1.4 Solar Radiation 16

III. LITERATURE REVIEW

3.1 Review of the related literature 26
3.1.1 Absorption Refrigeration 26
3.1.2 Research of AIT in Absorption Refrigeration 36
3.1.3 Desiccant Cooling 45

REFERENCES 51

I REQUIREMENT OF COLD STORAGE IN THAILAND

1.1 Introduction

Thailand is an agricultural country with a population of over 50 million. The intensive development of the agriculture is a prime element of Royal Thai Government policy and particular emphasis is laid on the increase of production of cash crops to increase the export earning and reduce the trade deficit of the country.

Agricultural crops, fish and meat are abundant in Thailand in comparision to the other developing countries of the world. The most important fruit crops are mango, durian, pomeloes, custard apple, mangosteen, orange, lime, pineapple, water melon, lichee, papaya, banana, jackfruit, guava, tamarind and rambutan. The main vegetable crops of the country are shallot, chinese radish, tomato, cabbage, cucumber, pumpkin, white gourd, taro etc. The production of the major fruits and vegetables for the year 1982 is shown in Table 1.1.

The major fruits and vegetable producing area is the stretch of land west of Bangkok city all the way to Nakorn Pathom province (Loo and Bauchan, 1968). A particular emphasis has been given to northern mountainous region of Thailand under the Royal Northern Project, established in 1969 (Devapriya, 1984). This area is within the so called 'Golden Triangle' considered as the principal opium growing area of the world. The Project was established under Royal patronage to persuade the local hillpeoples to cease the practice of shifting cultivation and opium growing. The project area under this project is approximately 40 square kilometres. Some of the replacement crops introduced are temperate-zone fruits and vegetables, which sell for relatively high prices in local markets (Boon-Long, 1983).

Tropical and sub-tropical fruits play a substancial role in the international trade. There is a market for exotic fruits like mangoes, papayas and passion fruits. Since the later part of

sixties, there has been simultaneously, in several countries of the West, a sudden rise in the consumption of non-traditional tropical and sub-tropical exotic fruits like tamarinds, soursop, cashew apples, cherries, jackfruits, pineapples, lichees, longans, avocados, guavas, papayas, mangosteens etc. (Vandendriessche, 1976).

With a central location and favorable natural resources, Thailand has potential to become a leading exporter of tropical and sub-tropical fruits in southeast Asia. The export of major fruits and vegetables during the year 1982 is shown in Table 1.2.

1.2 Fish and Meat Production

Fish is a significant part of the Thai diet. Both the fresh and marine fish are in good supply and are the sources of relatively less expensive animal proteins in the diet. Thailand is one of the largest fishing nations of the world and ranks third largest in the region after Japan and Peoples' Republic of China. The catch of the fresh water and the marine fish for the year 1982 is shown in the Table 1.3. For meat production, the most popular are pork,beef, buffalo meat and poultry. The meat and poultry production for the year 1982-1983 is shown in Table 1.4. Fish and meat export from the country for the year 1982 is given in Table 1.5.

1.3 Requirement of Refrigeration

Refrigeration plays an important role in the preservation of perishable commodities, the most important of them are foodstuffs. Most of the rural areas of the world produce ample amount of foodstuff but much of it is lost due to lack of proper preservation facilities like refrigeration. The losses might be of the order of 50% in the interval between production and consumption (FAO, 1984). For a warm and humid country like Thailand, this problem is more acute due to the unavailability of on-site cold storages, specially in the rural areas.

The main need for refrigeration is due to the following two reasons:

1. The plants and trees produce their entire crop during one season, while the supply of the produce should be, if possible, throughout the year. This could be achieved by proper handling and storage in the cold storages.

2. The products fetch premium prices if they are made available when they are out of season.

The main needs for cold and cool storage have been identified as follows:

1.3.1 Removal of field heat of agricultural produce

Harvested fresh vegetables and fruits undergo respiration, which involves enzymatic oxidation of sugar in the produce into Co_2 and water accompanied by the release of energy. This causes overipening, deterioration and ultimate destruction of the fruit. Since low temperature retards the activity of enzymes, the commonly accepted measure is to remove the field heat from the product within a short period of time after harvesting. The temperature of the produce at the time of loading is usually in the range 25-35^{0}C and it needs to be reduced to around 12^{0}C within a maximum of 24 hours (Tomkins and Woreko-Brobby, 1982).

1.3.2 Short term general storage

Local markets, co-operatives and marketing boards often require to store highly perishable commodities at around 12^{0}C (Tomkins and Woreko-Brobby, 1982). But wider variation can be tolerated in this case, as the produce are destined for local consumption.

1.3.3 Milk chilling

For the expansion of milk production and wider distribution of the milk and dairy products, proper chilling facilities are needed. If milk has to be kept for 24 hours it needs to be chilled to 10^0 C from the initial temperature of 37^{0}C. But if the storge is for 48 hours, then it needs to be cooled to 3^{0}C within 3 hours.

1.3.4 Fish storage using ice

The tropical varities of iced fish can be stored for the period of up to 25 days. The ice which is used for the fish chilling needs to be stored at a temperature of approximately -5^0C and the store for the storage of the chilled fish should be maintained at $2-3^0C$.

1.3.5 Long term chilled storage

Long term chilled storage is generally used for large scale storage of products like potatoes and onions. The storage temperature for these produce should be around 2^0C.

1.3.6 Long term frozen storage

For long term storage of commodities like meats and poultry the frozen storage temperatures range between -10 and -30^0C. The products can be held for months in such cold storages.

The storage temperatures for selected varieties of fruits and vegetables, and for animal produce are given in Table 1.6.

1.3.7 Medical and Pharmaceutical Storage

From six months of age until the fourth year of life, infections and parasitic disease play a significant role in maintaining high infant and child mortality rate in the developing countries of the world. The largest population should be immunized before infection occurs (WHO, 1972). Hospitals and health centres need refrigerators for storing vaccines and sensitive medicines approximately at $4-8^0C$ for short term storage and at about -20^0C for long term storage (Tomkins and Woreko-Brobby, 1982). The need for storage and distribution of vaccines for the Expanded Programme of Immunization has been documented by the World Health Organisation (WHO, 1981). So there is a great need of refrigerators to store vaccines at the health centres of the villages where they will be easily available for use at the time of need. The vaccine storage capacities vary between 3.6 and 200 litres. For a population of 20,000 to 100,000 with 150 child births per month, the volume of packed vaccine needed to fully immunize 150 infants and their mothers is 4 litres (McNelis and Lloyd, 1982).

The vaccine storage for rural hospitals and health posts is a great problem for Thailand as about 47,725 villages of the country do not have electricity, and in spite of the rural electrification programme of the Provincial Electricity Authority the number of villages without electricity is expected to increase to 55,000 by 1999 (Chantavorapap, 1979). At present, the villages without electricity are supplied with the vaccines by the nearby hospitals or health centres with electricity; the vaccines are transported in ice boxes.

1.4 Need for Cold Storage in Thailand

To evaluate the need for cold storage in Thailand a survey of existing cold stores was carried out. There are altogether 46 cold stores in Thailand (Saisithi, 1982), of which 24 are situated at and around Bangkok and rest of them are scattered in the provinces. Most of the privately owned cold stores do not have 'cool stores' to store vegetables and fruits as they are designed for the storage of frozen meats and fish for export. The details of the activities of these private cold stores are not available. So, informations was sought from the Government Cold Storage Organisation of Thailand, established in the year 1958.

The Cold Storage Organisation is a state enterprise under the control and supervision of the Ministry of Agriculture and Co-operatives. This organisation has altogether eleven plants at Bangkok and various provinces in the country. The cold stores in the provinces are located in the suburbs of the towns to make them accessible to the producers of vegetables and fruits. The cold stores in the provinces render freezing, cold and cool storage facilities to the farmers and the traders. The cool stores have a temperature of 0-10^{0}C and a relative humidity above 95%. The main products stored in the 'cool stores' are fruits, vegetables, dried fresh water and marine fish, dried lizard etc., for local consumption and export. The fresh fish is also stored temporarily in cool stores during the 'intermediate waiting period' for better utilization of the limited freezer capacity. According to Kasemsap (1985), the Deputy Director of the Organization, the market share of the Organization is approximately 20%. The privately owned cold stores are generally small, having 30 to 100 ton holding capacities.

According to him, there is a great need for small 'cool stores' having a storage temperature of 0 - 10^{0}C and a relative humidity above 95% located close to the production areas. The holding capacities of these units can be of the order of 10 to 30 cubic metres. Such units should be available in the North, North-East, East and the central region of the Thailand. These units would be used to store fruits and vegetables for retaining their freshness and quality for better distribution and sale in the local market, or as temporary storage before being transferred to bigger stores for long term storage and distribution in a wider market.

These units will be of great value for the farmers in the mountaineous northern Thailand where vegetables, fruits and flowers are grown as a part of the crop replacement program to reduce deforestation and opium growing by hillpeoples. Emphasis has been placed on high-priced vegetables which could not be grown well or could be grown only during a limited period in the lowlands. Very heavy post-harvest losses have been reported, mostly due to lack of proper storage conditions --- up to 75% on the route from Chiang Mai to Bangkok (a distance of 700 km) (Boon-Long, 1983). The major reason for this has been sited as lack of pre-cooling before transportation. So the small cool stores could be used as pre-coolers shortly after harvesting, or for short term storage.

To implement such projects in different parts of the country, government incentive is needed in terms of soft and sub-loans with the special purpose of developing rural areas. According to Kasemsap (1985) such loans could be channelled through the Government Cold Storage Organisation which has expertise and manpower to initiate and implement such projects.

Less than 50% of the villages of the provinces are electrified, and so would be the potential users of solar powered cool storage units.

Table 1.1: Major Fruits and Vegetables produced during the year 1982.

Description	Production (Metric ton)	Remarks
Pineapple	1,351,969	Field Crops and Fruits
Watermelon	941,482	
Sweet Potato	209,873	
Potato	5,057	
Grapes	73,000*	
Bananas	2,028,000*	
Citrus fruit (Total)	73,000*	
Shallot	296,450	Vegetable Crops
Chinese Radish	60,103	
Tomato	70,193	
Cabbage	89,709	
Cucumber	210,658	
Yard long bean	80,350	
Angled luffa	16,602	
Chinese cabbage	61,823	
Leaf mustard Chinese	62,337	
Packchoi Chinese cabbage	60,157	
Chinese kale	69,968	
Water convolvulus	54,685	
Yam bean	55,628	
Pumpkin	171,242	
White gourd	85,667	
Taro	62,068	

Sources: Statistical Yearbook of Thailand (1984),

* Handbook of Agricultural Statistics for Asia and Pacific (1983).

Table 1.2: The export of major fruits and vegetables of Thailand during the year 1982.

Description	Quantity (Metric ton)	Value (฿ 1000')
Onions, shallots, garlic, and other alliaceous vegetables, fresh	1,946	10,275
Vegetables, fresh	13,505	86,092
Vegetables, chilled and frozen	2,341	13,224
Potatoes, fresh or frozen	3	31
Tomatoes, fresh or frozen	173	1,687
Oranges	4,368	38,134
Mandarines tangerines	790	3,899
Pomeloes	2,763	26,906
Other citrus fruits	10	238
Lemon and limes	333	2,363
Grapes, fresh	1,989	37,684
Bananas, fresh	18,388	51,511
Mangoes, fresh	4,118	32,540
Watermelon, fresh	685	2,100
Longans, fresh	10,316	296,518
Durians, fresh	2,347	58,387
Papayas, fresh	12,427	68,457
Rambutans, fresh	523	3,950
Pineapples, fresh	318	4,484
Sugar apples, fresh	1,705	12,573
Frozen fruit	11,213	107,908
Other fruits, fresh	1,583	21,751
Fruit provisionally preserved for transport-tation	29	553

Source: Agricultural Statistics of Thailand Crop Year (1982-83)

Table 1.3: The marine and the fresh water fish catch during the year 1982.

Description	Quantity (Metric ton)
Marine water fish	1986,571
Fresh water fish	133,562

Source: Statistical Yearbook of Thailand (1984).

Table 1.4: The production of meat and poultry during the year 1982.

Description	Quantity (Metric ton)
Buffalo meat	218,000
Pig meat	246,000
Chicken meat	266,000
Meat (total) indegeneous	760,000

Source: Handbook of Agricultural Statistics for Asia and Pacific (1983).

Table 1.5: The export of meat and poultry during the year 1982.

Description	Quantity (Metric ton)	Value (฿1000')
Fowl, ducks fresh, chilled or frozen	33,217	1,310,009*
Curtle fish, fresh, chilled or frozen	39,434	1,715,236*
Meat, fresh or frozen	87	4,669
Poultry meat, fresh, chilled or frozen	33,245	1,315,071

Sources: ASEAN Statistical Yearbook on Food, Agriculture and Forestry (1982).

*Statistical Yearbook of Thailand (1984)

Table 1.6: The conditions of storage of the chilled produce.

Description	Temp. (^0C)	RH (%)	P.S.L.	Remarks
Fruits				
Apple (a.o.v.)	0-4	90-95	2-6m	
Apricot	0	90	2-4w	
Cherry	0	90-95	1-2w	
Date (fresh)	0	85	1-4m	
Grape (a.o.v.)	-1 to 0	90-95	1-4m	Storage Temp.
Orange (a.o.v.)	0 to 4	85-90	3-4m	0 to 4^0C
Peach	0	90	2-4w	
Pear (a.o.v.)	0	90-95	2-4w	
Plum	0	90-95	2-4w	
Strawberry	0	90-95	1-5d	
Mandarine	4-6	85-90	4-6w	Storage Temp.
Mangosteen	4-5	85-90	6-7w	$4-8^0C$
Melon	5-10	85-90	2-3w	
Avocado	7-12	85-90	1-2w	
Banana (green)	12-13	85-90	10-20d	
Grapefruit	8-10	85-90	2-3m	
Guava	8-10	90	2-3w	
Lemon	10-14	85-90	1-4m	Storage Temp.
Lime	8.5-10	85-90	3-6w	$\geq 8^0C$
Mango (a.o.v)	7-12	90	3-7w	
Melon (a.o.v.)	7-12	85-90	1-12w	
Pineapple (green)	10-13	85-90	2-4w	
(ripe)	7-8	90	2-4w	

Table 1.6: The conditions of storage of the chilled produce (Contd.).

Description	Temp. (^0C)	RH (%)	P.S.L.	Remarks
Vegetables				
Brussel	0	90-95	3-4w	
Cabbage	0	85-90	3-5w	
Carrot (topped)	0	≥ 95	5-6w	
Cauliflower	0	95	2-3w	
Celery	0	≥ 95	4-12w	
Garlic	0	65-70	6-7m	
Leek	0	≥ 95	1-3m	
Lettuce	0	95	1-2w	Storage Temp. 0 to 4^0C
Mushroom	0	90-95	5-7d	
Onion	0	60-70	6-8m	
Peas (Unshelled)	0	95	1-3w	
Potatoes (seed)	2-3	90-95	5-8m	
Radish	0	90-95	1-2m	
Spinach	0	95	1-2w	
Turnip	0	95	4-5m	
Beans (French)	7-8	92-95	1-2w	Storage Temp. 4 to 8^0C
Potatoes (Table)	4-6	90-95	4-8m	
(Industry)	7-10	90-95	2-5m	
Cucumber (a.o.v.)	9-12	95	1-2w	Storage Temp. ≥ 8^0C
Eggplant	7-10	90-95	10d	
Ginger	13	65	6m	
Pumpkin	10-13	50-75	2-5m	
Potatoes (sweet)	13-16	85-90	4-7m	
Tomato (green)	12-13	85-90	1-2w	
(mature)	9-12	85-90	1w	

Table 1.6: The conditions of storage of the chilled produce (Contd.).

Description	Temp. (^0C)	RH (%)	P.S.L.	Remarks
Animal Products				
Beef	-1.5 to 0	85-90	3-5w	
Eggs (shelled)	-1 to 0	90	6-7m	
Fish (a.c.)	0	x	6-14d	
Lamb	-1 to 0	_	4-8m	Storage Temp. 0 to 4^0C
Lamb	-1 to 0	85-95	3-4w	
Minced meat	4	85-95	1d	
Pork	-1.5 to 0	85-95	3w	
Poultry (eviscerated)	-1 to 0	85-95	1-2w	
(uneviscerated)	0	60-70	3w	
Shellfish	0	x	4-6d	

Source: Design and Operations of Cold Stores in Developing Countries (F.A.O., 1984).

Symbols

RH : Relative Humidity,

P.S.L. : Practical Storage Life,

d : Days,

w : Weeks,

m : Months,

a.c : According to Catagory,

a.o.v. : According to Origin and Variety.

II CLIMATOLOGY OF THAILAND

2.1 General Information

The kingdom of Thailand is located in the Indochina Peninsula of South East Asia between 5^0 37' and 20^0 27' North latitude and 97^0 22' and 105^0 37' East longitude (Fig. 2.1). The country is 'axe-shaped' with a long handle extending southward along the Malay Peninsula, and has a total area of nearly 513,115 square kilometres. Thailand has hills and mountains especially in the northern part, a central plain, and a Peninsular zone in the southern part of the country (Suthaya, 1985, and National Statistics Office, 1984).

2.1.1 Climatology

The climate of Thailand is tropical. Most parts of the country are under the influence of northeast and southwest monsoon winds, which create the climate. The weather is relatively cool and dry in winter, and is hot and wet in the summer, except for the southern part where it rains all the year round.

2.1.2 Temperature

High temperatures are experienced all the year round in Thailand. They reach their peak in March and April when the afternoon temperatures are in the range 34 - 38^0C. The lowest temperatures occur in December and January. In the coldest season minimum temperatures average about 10^0C in the extreme north and rise gradually to the low twenties, in the Peninsular Thailand.

2.1.3 Relative Humidity

During the early morning hours the relative humidity frequently reaches 100% at or near the ground. Though there is pronounced seasonal variation in the humidity conditions, morning humidities are relatively high throughout the year. Afternoon conditions are relatively dry during the north-east monsoon (November to January) and humid during south-west monsoon (May to

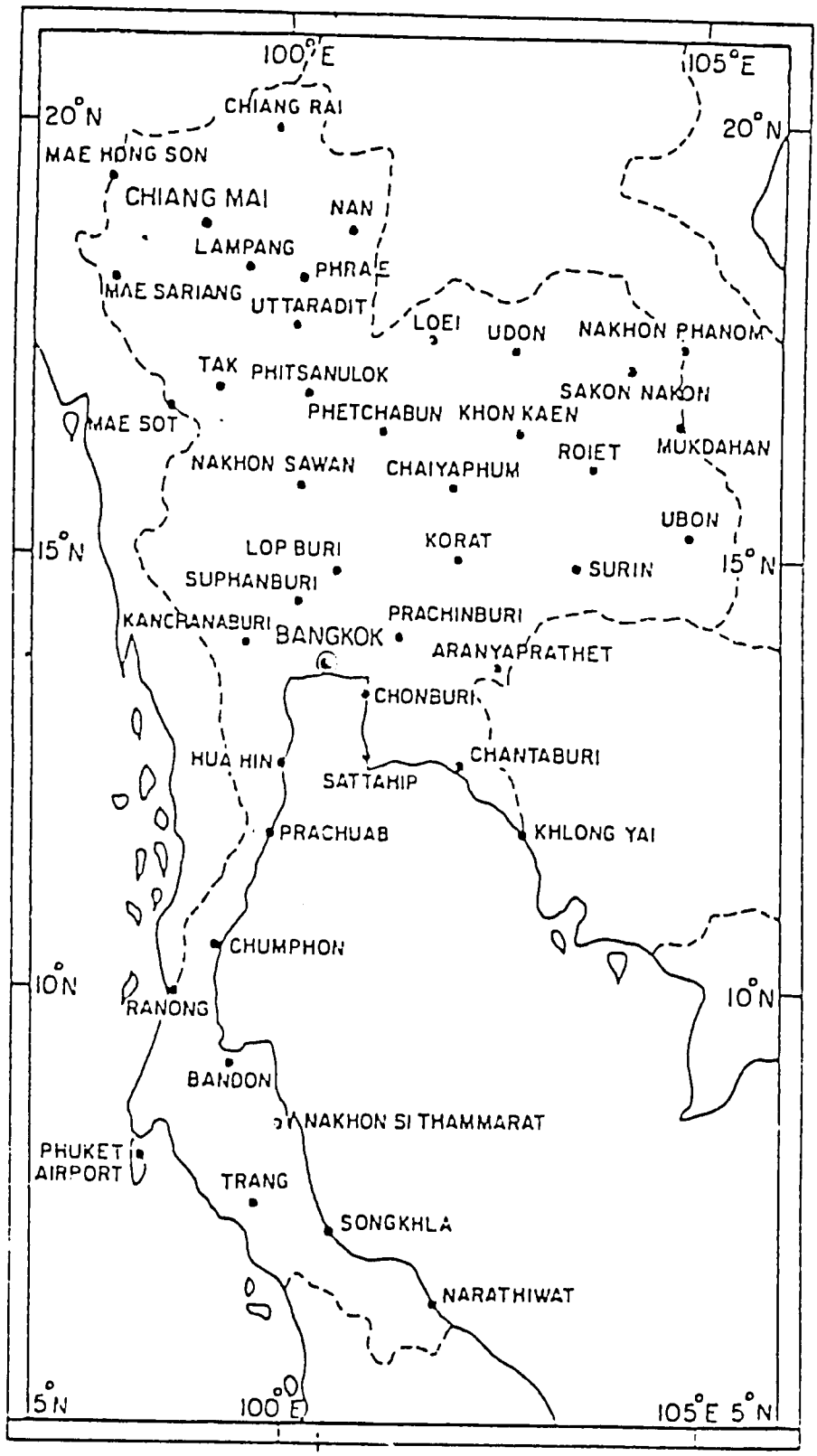

Fig. 2.1. Map of Thailand showing the locations of the meteorological stations.

October). Humidities begin decreasing in November and reach minimum in February except for Peninsular Thailand where minimum humidity occurs during the south-west monsoon.

The temperature, relative humidity, mean dew point temperature, average daily durations of sunshine, and the average wind speed are given in Tables 2.1-2.4 for the four stations which represent the north, north-east, mid-plain and the Peninsular Thailand (Climatology Division, 1982).

2.1.4 Solar Radiation

The solar radiation climate of Thailand can be broadly divided into four seasonal periods: spring equinox, summer solstice, autumn equinox and winter solstice. The spring has frequent clear days and a distribution of global solar radiation with a peak peak near 21 MJ m^{-2}. Summer is the beginning of the wet season which increases the cloud and causes the peak in the distribution to fall near 17 MJ m^{-2}. The autumn is the wettest season of the year and daily totals of global solar radiation are around 15 MJ m^{-2}. The winter is relatively dry and the distribution of the solar radiation is similar to that of spring but the peak is slightly lower (near 18 MJ m^{-2}) due to lower position of sun in the sky. Geographically, the highest mean values of daily solar radiations are above 20 MJ m^{-2} and are wide spread during spring; the lowest mean values are below 14.66 MJ M^{-2} in restricted localities with heavy rainfall on the coast in autumn.

The percentage distribution of global solar radiation at Bangkok has been calculated from an unbroken five years of data (1968 to 1972) recorded at Asian Institute of Technology. The radiation amounts were divided into classes of width 2.095 MJ m^{-2} and the frequencies in the classes during eight one and half month periods were counted (Exell and Saricali, 1976). The results are presented in Table 2.5.

The global solar radiation values for other stations are either not available or are incomplete, except for Bangkok and Chiang Mai. But the duration of sunshine is recorded at many other meteorological stations. To determine the global solar radiation for other stations a linear correlation of the type $Q/Q_m = a + b\ S/S_m$ was established from the available data of

Table: 2.1 The Climatological Data for Chiang Mai.

Location	Chiang Mai
Longitude	98° 59' E
Latitude	18° 47' N
Altitude	312 m

Temperature: °C

	J	F	M	A	M	J	J	A	S	O	N	D	Year
Mean Max.	28.9	31.9	34.8	36.1	34.1	32.3	31.6	30.7	31.0	30.8	29.8	28.5	31.7
Mean Min.	13.2	14.1	17.5	21.4	23.3	23.6	23.4	23.2	22.9	21.6	18.7	14.9	19.8
Ext. Maxm	34.7	37.3	39.6	41.5	41.4	37.9	37.5	35.4	36.1	35.3	34.5	33.5	41.9
Ext. Minm.	3.7	7.3	10.0	13.2	19.6	19.1	20.5	20.0	16.8	13.3	6.0	5.0	3.7
Mean	20.1	22.2	25.7	28.4	28.0	27.2	26.8	26.3	26.2	25.5	23.5	20.8	25.1

Relative Humidity %

Mean Maxm.	94.2	90.5	84.3	83.5	90.0	93.1	93.4	94.3	94.5	94.5	94.2	94.4	91.7
Mean Minm	43.1	33.9	31.5	37.6	51.8	60.7	62.7	66.6	64.9	60.1	53.9	48.5	51.3
Mean	74.0	65.0	59.0	60.0	73.0	79.0	81.0	83.0	83.0	81.0	79.0	77.0	74.0

Dew Point Temperature: °C

Mean	14.5	14.3	15.8	18.3	22.1	23.0	22.8	22.9	22.9	21.7	19.1	15.6	19.5

Average Daily Duration of Sunshine:

Mean	8.61	9.52	9.16	9.03	7.75	5.73	4.67	4.48	6.90	7.35	7.93	8.26	7.45

Prevailing Direction and Wind Speed (Knots):

Direct	S	S	S	S	S	S	S	S	S	N	N	N	-
Speed	1.7	2.3	2.8	3.5	3.3	3.0	2.6	2.4	2.3	2.1	1.7	1.5	-

Table: 2.2: The Climatological Data for Khon Kaen

Location	Khon Kaen
Longitude	102° 50' E
Latitude	16° 26' N
Altitude	165 m

Temperature: °C

	J	F	M	A	M	J	J	A	S	O	N	D	Year
Mean Max.	30.5	32.7	35.4	36.5	34.8	33.2	32.6	32.0	31.5	31.4	30.8	30.0	32.6
Mean Min.	16.0	18.8	22.1	24.2	24.7	24.6	24.2	24.1	23.6	22.3	19.2	16.3	21.7
Ext. Maxm.	37.2	41.0	41.8	42.8	41.2	39.4	38.0	37.0	35.5	35.8	37.2	35.8	42.8
Ext. Minm.	5.7	10.4	10.3	14.0	19.8	20.7	20.2	20.8	19.3	14.0	9.4	5.6	5.6
Mean	23.2	25.7	28.8	30.2	29.4	28.7	28.1	27.7	27.2	26.7	25.0	23.2	27.0

Relative Humidity: %

Mean Maxm.	85.8	83.2	81.2	82.3	87.7	88.0	90.0	91.4	93.0	90.7	87.8	87.1	87.4
Mean Minm.	43.5	41.5	39.9	43.3	53.8	60.0	61.7	64.6	66.4	59.2	49.7	44.8	52.4
Mean	63.0	62.0	60.0	63.0	72.0	76.0	77.0	80.0	82.0	76.0	70.0	66.0	70.0

Dew Point Temperature: °C

Mean	15.3	17.1	19.4	21.6	23.4	23.7	23.6	23.7	24.4	21.9	18.7	15.9	20.7

Average Daily Duration of Sunshine: h

Mean	8.57	8.60	7.84	8.53	7.97	6.53	5.90	5.23	5.47	7.84	8.53	9.22	7.55

Prevailing Direction and Mean Wind Speed (Knots)

Direct.	NE	NE	NE	SW	SW	SW	SW	SW	SW	NE	NE	NE	-
Speed	3.2	3.0	3.5	3.7	3.6	3.9	4.1	3.8	2.8	3.4	3.8	3.6	-

Table: 2.3: The Climatological Data for Bangkok.

Location	Bangkok
Longitude	100° 34'
Latitude	13° 44'
Altitude	312 m

Temperature: °C

	J	F	M	A	M	J	J	A	S	O	N	D	Year
Mean Max.	31.9	32.7	33.8	34.9	34.1	33.0	32.5	32.2	31.9	31.7	31.3	31.3	32.6
Mean Min.	20.6	22.8	24.6	25.7	25.4	25.1	24.8	24.7	24.4	24.3	22.8	20.7	23.8
Ext. Maxm.	36.0	36.6	39.8	40.0	39.4	37.7	37.8	36.3	36.0	35.3	35.1	35.2	40.0
Ext. Minm.	9.9	14.9	16.5	19.9	21.1	21.7	21.9	21.2	21.3	18.3	14.2	10.5	9.9
Mean	25.6	27.2	28.6	29.6	29.1	27.8	27.6	27.5	26.6	25.5	26.6	25.5	27.7

Relative Humidity: %

Mean Maxm.	91.6	92.9	92.5	91.4	93.2	92.5	92.5	93.7	95.3	95.2	93.4	91.4	93.0
Mean Minm.	49.2	53.6	55.4	55.9	60.7	63.0	64.2	64.6	67.2	66.6	60.2	52.7	59.4
Mean	73.0	76.0	77.0	77.0	79.0	79.0	80.0	81.0	84.0	83.0	79.0	74.0	78.0

Dew Point Temperature: °C

Mean	19.7	21.2	23.6	24.5	24.8	24.3	24.0	23.5	24.1	21.4	21.4	19.9	22.9

Average Daily Duration of Sunshine: h

Mean	9.06	9.0	8.77	8.7	7.26	6.33	5.55	5.32	5.17	6.77	8.30	8.71	7.41

Prevailing Direction and Mean Wind Speed (Knots):

Direct.	NE	S	S	S	S	S	SW	W	W	NE	N	NE	-
Speed	3.6	5.1	5.8	5.7	4.6	4.8	4.5	4.6	3.8	3.3	3.5	3.4	-

Table: 2.4: The Climatological Data for Songkhla.

Location	Songkhla
Longitude	100° 36'
Latitude	07° 12'
Altitude	312 m

Temperature: °C

	J	F	M	A	M	J	J	A	S	O.	N	D	Year
Mean Max.	29.6	30.4	31.4	32.7	33.1	32.8	32.6	32.6	32.3	31.1	29.6	29.2	31.4
Mean Min.	23.9	24.0	23.9	24.3	24.4	24.1	23.7	23.8	23.7	23.6	23.7	23.9	23.9
Ext. Maxm.	34.0	32.8	36.5	38.2	36.5	36.2	36.1	36.2	35.9	35.2	34.4	33.3	38.2
Ext. Minm.	19.1	20.3	19.8	20.5	21.8	20.9	20.6	20.8	21.0	20.7	19.9	20.5	19.1
Mean	26.9	27.4	28.0	28.7	28.4	28.1	27.8	27.8	27.5	27.0	26.6	26.6	27.6

Relative Humidity: %

Mean Maxm.	87.8	87.7	90.3	91.9	92.9	92.3	92.4	92.0	92.5	94.6	94.2	91.1	91.6
Mean Minm.	68.1	65.8	64.6	63.5	63.1	62.1	61.8	61.0	62.5	68.2	73.9	72.7	65.6
Mean	77.0	76.0	76.0	77.0	79.0	78.0	78.0	77.0	79.0	83.0	84.0	82.0	79.0

Dew Point Temperature: °C

Mean	22.5	22.7	23.3	24.1	14.2	23.7	23.3	23.2	23.2	23.6	23.6	23.1	23.4

Average Dailly Duration of Sunshine: h

Mean	8.35	9.13	8.67	8.97	7.61	6.83	6.87	6.80	6.33	5.64	5.33	5.84	7.19

Prevailing Direction and Mean Wind Speed (Knots):

Direct.	E	E	E	E	W	SW	SW	W	SW	SW	E	E	-
Speed	12.0	11.0	9.0	7.0	5.5	5.7	5.8	6.5	6.1	5.5	7.3	10.3	-

daily totals of global solar radiation 'Q' and daily duration of sunshine 'S' for the five year period between 1968-1972, at two stations, Chiang Mai and Bangkok. Q_m is the mean daily total global solar radiation in the abcence of cloud obtained from the tabulated values calculated by Schüepp (Exell and Saricali, 1976) for the standard atmospheric conditions: 2 cm of precipitable water, pressure 1000 mb, Ozone content 0.34 cm NTP and zero turbidity. S_m is the mean maximum daily duration of sunshine recordable, which is assumed to be equal to time between sunrise and sunset minus 0.4 h. The values of the dimensionless parameters a and b were determined for those two stations. The values of these parameters for other stations located between the latitudes of Chiang Mai and Bangkok were calculated by linear interpolation of parameters of those two stations. But for the stations south of Bangkok the values for Bangkok were adopted. The percentage distribution of global solar radiation was also calculated from the duration of sunshine (Exell and Saricali, 1976). The values of the percentage distribution of global solar radiation for Chiang Mai, Khon Kaen and Songkhla calculated from the hourly sunshine data are presented in Tables 2.6, 2.7 and 2.8.

Table 2.5 : Percentage distribution of daily totals of the global solar radiation at Bangkok.

Radiation Class MJ m^{-2}	Jan 14 to Feb 26	Feb 27 to Apr 12	Apr 13 to May 28	May 29 to Jul 15	Jul 16 to Aug 31	Sep 1 to Oct 15	Oct 16 to Nov 15	Nov 30 to Jan 13
0.000 - 2.095	0	0	0	1	0	2	0	0
2.095 - 4.190	1	1	0	0	0	1	1	1
4.190 - 6.285	1	2	1	2	2	2	2	1
6.285 - 8.380	1	1	2	3	4	6	2	4
8.380 - 10.47	5	3	4	9	6	9	7	4
12.570 - 14.66	9	4	10	11	23	15	13	11
14.660 - 16.76	20	8	8	17	20	14	13	16
16.760 - 18.85	29	14	14	23	14	15	18	30
18.850 - 20.95	18	26	14	11	8	10	22	25
20.950 - 23.05	9	27	17	12	7	6	11	1
23.050 - 25.14	2	9	20	3	2	4	1	0
25.140 - 27.23	1	0	3	1	0	1	1	0
27.230 - 29.33	0	0	1	0	0	0	0	0

Source : Exell and Saricali (1976).

Table 2.6: Percentage distribution of daily totals of the global solar radiation estimated from duration of sunshine at Chiang Mai.

Radiation Class MJ m^{-2}	Jan 14 to Feb 26	Feb 27 to Apr 12	Apr 13 to May 28	May 29 to Jul 15	Jul 16 to Aug 31	Sep 1 to Oct 15	Oct 16 to Nov 15	Nov 30 to Jan 13
0.000 - 2.095	0	0	0	0	0	0	0	0
2.095 - 4.19	0	0	0	0	0	0	0	0
4.190 - 6.285	0	0	0	0	0	0	1	1
6.285 - 8.38	1	1	0	1	3	2	4	4
8.38 - 10.47	1	1	2	4	10	5	6	4
10.47 - 12.57	2	2	3	10	16	7	8	5
12.57 - 14.66	3	4	4	12	16	10	8	12
14.66 - 16.76	16	8	6	14	15	12	12	33
16.76 - 18.85	49	20	11	16	14	16	25	36
18.85 - 20.95	26	32	20	17	12	20	27	5
20.95 - 23.05	2	24	26	14	8	17	8	0
23.05 - 25.14	0	7	20	8	4	9	1	0
25.14 - 27.23	0	1	7	3	2	2	0	0
27.23 - 29.33	0	0	0	0	0	0	0	0

Source: Exell and Saricali (1976).

Table 2.7: Percentage distribution of daily totals of global solar radiation estimated from the duration of sunshine at Khon Kaen.

Radiation Class MJ m^{-2}	Jan 14 to Feb 26	Feb 27 to Apr 12	Apr 13 to May 28	May 29 to Jul 15	Jul 16 to Aug 31	Sep 1 to Oct 15	Oct 16 to Nov 15	Nov 30 to Jan 13
0.000 - 2.095	0	0	0	0	0	0	0	0
2.095 - 4.19	0	0	0	0	0	0	0	0
4.19 - 6.285	1	0	0	0	0	1	1	1
6.285 - 8.38	2	2	0	1	3	4	2	2
8.38 - 10.47	3	3	1	4	8	7	3	3
10.47 - 12.57	4	4	3	8	14	8	5	5
12.57 - 14.66	8	5	6	12	15	10	8	10
14.66 - 16.76	21	12	10	16	14	12	15	27
16.76 - 18.85	36	23	16	19	15	16	28	37
18.85 - 20.95	22	30	22	18	14	17	27	14
20.95 - 23.05	3	17	23	13	10	15	10	1
23.05 - 25.14	0	4	14	7	5	8	1	0
25.14 - 27.23	0	0	4	2	2	2	0	0
27.23 - 29.33	0	0	1	0	0	0	0	0

Source: Exell and Saricali (1976).

Table 2.8: Percentage distribution of daily totals of the global solar radiation estimated from duration of sunshine at Songkhla.

Radiation Class MJ m^{-2}	Jan 14 to Feb 26	Feb 27 to Apr 12	Apr 13 to May 28	May 29 to Jul 15	Jul 16 to Aug 31	Sep 1 to Oct 15	Oct 16 to Nov 15	Nov 30 to Jan 13
0.000 - 2.095	0	0	0	0	0	0	0	0
2.095 - 4.19	0	0	0	0	0	0	1	0
4.19 - 6.285	0	0	0	0	0	1	3	2
6.285 - 8.38	1	1	1	1	1	3	8	5
8.38 - 10.47	1	1	2	5	4	6	12	9
10.47 - 12.57	2	2	3	10	8	9	13	10
12.57 - 14.66	5	3	6	14	11	13	13	13
14.66 - 16.76	14	7	12	18	15	17	14	18
16.76 - 18.85	27	16	21	21	20	18	14	20
18.85 - 20.95	30	29	26	18	22	16	13	16
20.95 - 23.05	16	27	19	10	14	10	7	6
23.05 - 25.14	4	12	8	3	4	5	2	1
25.14 - 27.23	0	2	2	0	1	2	0	0
27.23 - 29.33	0	0	0	0	0	0	0	0

Source: Exell and Saricali (1976)

III LITERATURE REVIEW

3.1 Review of the related literature

Among the applications of the solar energy, refrigeration is attractive because of rough coincidence of energy supply and cooling demand, both geographically and temporally. Solar powered refrigeration would be useful in the remote areas where conventional sources of energy are either unobtainable or expensive. It could be employed to make ice for the ice-boxes of the individual households or the the cold storages of food and medical vaccines. These cold stores should be able to maintain temperatures in the range of 0 to 10^0C and would be used for short term preservation of fresh fruit and vegetables, fish and dairy products or the long term preservation of dried products.

In this review, a brief history of the work done on solar powered refrigeration at Asian Institute of Technology and outside is given. Solar desiccant cooling, which is generally used for the air conditioning applications, has also been reviewed for the understanding of the basic principle and to look for possiblities for combining these two systems to develop a solar powered cold storage.

The different refrigeration methods which have been put forward as suitable to be solar powered, e.g. absorption cycles (intermittent and continuous), Rankine cycle systems, solid adsorption and desiccant cooling, and photovoltaic system, have been described by Exell (1981), Sheridon (1981), Tomkins and Woreko-Brobby (1982), and McVeigh (1984).

3.1.1 Absorption Refrigeration

Absorption refrigeration is one of the earlist method for producing refrigeration. The scientific basis for the absorption refrigeration was proposed by Faraday. But Carr'e Fernand is generally credited with the first patent of the intermittent absorption machine (Plank, 1983). Surveys of solar powered absorption refrigeration have been carried by Swartman and others (1973), Dutting (1978), Bjurstron and Raldow (1981), and Kaushik and Bhardwaj (1982).

According to Swartman and others (1973), the first study to explore the use of solar energy for refrigeration was probably during the year 1936 at the University of Florida by Green. In

this system, a steam jet refrigerator was powered by steam produced from water flowing in a pipe placed at the focus of a cylindro-parabolic reflector.

Oniga (1937) has reported the several attempts made in Brazil to adapt a parabolic reflector to an absorption refrigerator. However, the work never passed the experimental stage. According to him, Center for Studies in Applied Mechanics (CSAM), Rio de Jeneiro has conducted a more detailed study of problems of internal arrangements of this type of refrigerating unit and a prototype unit having 64 kg of ammonia-water solution (approximately 66.7% NH_3 by weight) has been tested. This system is reported to be capable of keeping a refrigerator box having 0.336 m^3 internal volume cool for 24 hours.

Williams and others (1958) of University of Wisconsin, investigated on a small intermittent type refrigerator in which a parabolic reflector of 1.22 m^2 focussed the sunlight into the steel vessel of the closed system. The main objective of this research was to compare the performance of the different refrigerant-absorbent combinations e.g. NH_3-H_2o, R-21 - Glycol ether. This study revealed that refrigeration can be achieved by the use of intermittent absorption refrigeration cycle and the performance of the system with ammonia-water was better than that of R-21 - Glycol ether.

Chung and Duffie (1961) modified an old ammonia-water absorption refrigerator called 'icy-ball'. The generator of the system, which was origionally heated by kerosene, paraffin, gas or firewood, was heated by solar heat focussed by a small parabolic reflector. The generator was heated for two hours, whereafter the unit was transferred to a refrigeration box, which remained cool for about 24 hours.

Solar powered intermittent ammonia-water absorption refrigeration using flat-plate collectors was pioneered by Chinnappa (1962). The schematic diagram of the unit, which was constructed of welded steel is shown in Fig. 3.1. The generator system consisted of a solar collector, a boiler, and a solution reservoir. The collector was a copper sheet 1.52 m by 1.07 m in area and 0.76 mm thick painted dull black. Six 6 mm diameter steel pipes were soldered to the sheet at intervals of 152 mm, and were welded to the headers. The collector had three glass covers, with the first 50 mm above the collecting plate

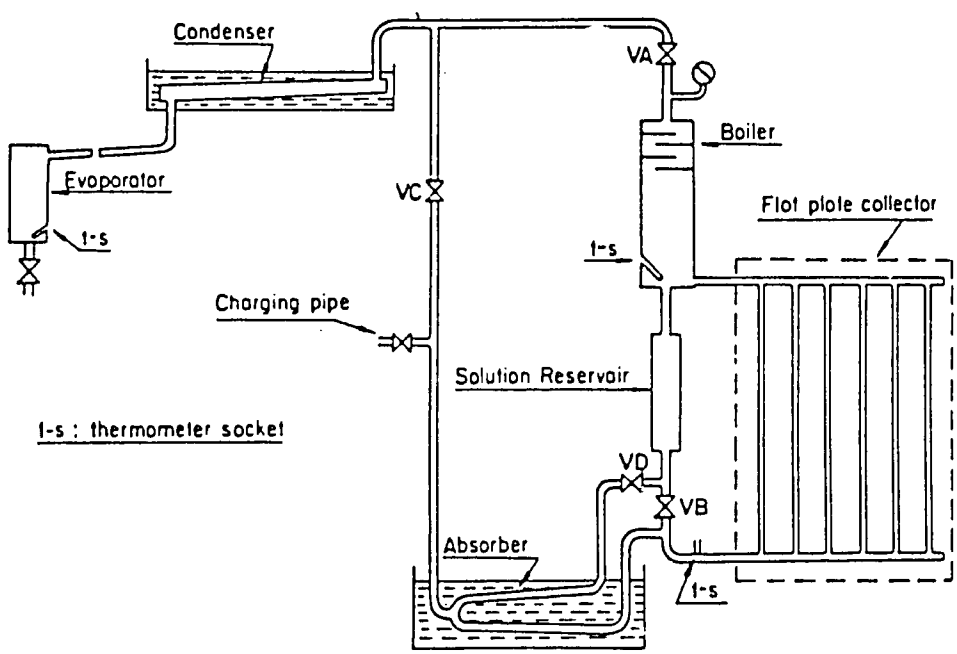

Fig. 3.1. Schematic Diagram of Solar Refrigerator by Chinnappa (1962)

and the three covers seperated from each other by 25 mm air gaps. The absorber and the condenser of the system was water cooled. Nine kg of ammonia-water solution of concentration 0.46 ammonia was charged to the system and 1.2 kg of pure ammonia was produced on a clear day. This investigation revealed that the system with flat-plate collector can produce temperature as low as -12^0C. This unit was capable of producing 1.2 to 1.6 kg of ice per m^2 of collector area. The overall coefficient of performance of the system (the amount of refrigeration divided by the solar radiation incident on the collector) was about 0.06. The results of the experiment were not spectacular, but they showed that a simple system using a low temperature device like solar flat-plate collector can achieve quite low temperatures.

Trombe and Foex (1964) constructed a solar ammonia-water absorption refrigerator oparated intermittently (see Fig. 3.2). The solution was allowed to flow from a cold reservoir through a pipe placed along the focus of a cylindro-parabolic reflector of aluminum-magnesium alloy. The system had a very low heat capacity since a small part of solution was heated. This unit could produce 4 kg of ice per m^2 of the collector area. The requirement of concentrationg collector made this system too expensive to build and operate.

Swartman and Swaminathan (1971) developed further the system built by Chinnappa (1962). Instead of using the boiler and the solution reservoir outside the collector, they used a large header of diameter 152 mm, which provided the required capacity for the solution and large surface for the evaporation of ammonia as shown in Fig. 3.3. In the same manner the condenser and evaporator were combined into a single unit. During the refrigeration period absorption takes place in the collector and heat of absorption could be released by opening the glass cover. Thus the collector acted both as an absorber and a generator. This system could produce 1.9 kg of ammonia per m^2 of collector but the refrigeration process was too slow because of ineffective absorption of ammonia vapour into the solution. They proposed using the collector to dissipate the heat of absorption to overcome this problem.

Theoretical analysis of the heat transfer and flow characteristics of the collector used as generator in the solar powered ammonia-water refrigerators was done by Moore and Farber

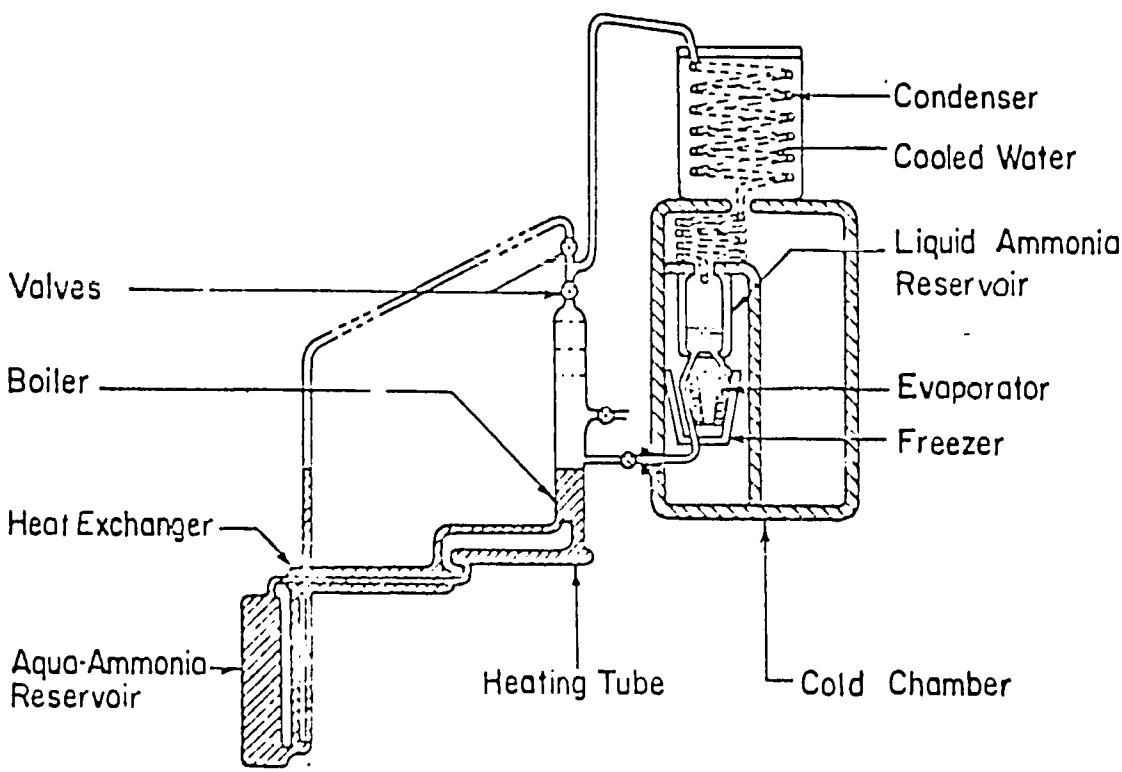

Fig. 3.2. Intermittent Solar Refrigerator built by Trombe and Foex (1964)

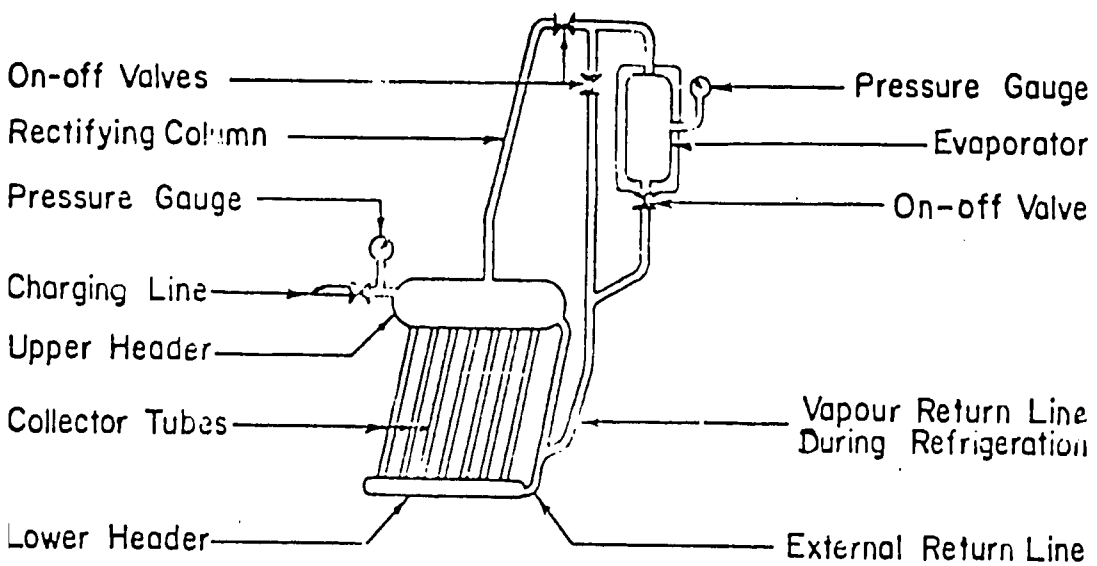

Fig. 3.3. Intermittent Solar Refrigerator built at University of Western Ontario by **Swartman and Swaminathan** (1971)

(1967). They also studied the effects of varying the centre-to-centre tube spacing, the tube diameter and backing effect of absorber sheet thickness. The theoretical work culminated in a collector 1.49 m^2 in area consisting of 25.4 mm diameter steel pipes running from a 31.8 mm diameter feeder to a 63.5 mm diameter header. The centres of the 25.4 mm diameter steel pipes were spaced 102 mm apart and were soldered to a galvanised iron sheet of thickness 1.0 mm. A single glass cover was used in this design.

An interesting design of a communal solar powered plant to produce blocks of ice for individual village households using a solid sodium chloride as adsorbent has been proposed by Eggers-Lura (1978). The plant should make 500 kg of ice per day, but to allow for periods of cloudiness the system was designed for 720 kg of ice on a clear day. The length of the generating period is five hours around noon, and the length of the freezing period is 12 hours at night. The system has flat-plate solar collectors of 156 m^2 surface area in ten sections with single glazing and selective black surface. The efficiency of these collectors is assumed to be 50%. The insulation at the back of the collector is so mounted that it can be removed during absorption period. The condenser cooled by the stagnant water, and the ice maker, are underneath the collectors. The water bath of the condenser is 6m x 2.8 m x 0.8 m and the heat transfer area of the condenser tubes was 18 m^2. The ice generator makes 60 blocks of ice, each 12 kg, in a brine basin with a flooded evaporator at -10^0C. Considering the initial cost of the unit at $26,000 (1978), daily production of 500 kg of ice, an interest rate of 6%, and working life of 12 years, ice would be produced at a price of $0.02 per kilogram.

Initially, most studies in solar refrigeration were directed towards the intermittent system, as such systems were aimed to be used in the villages or remote islands where electricity is not available. But later investigations were also directed towards continuous refrigeration systems which use small pumps to circulate a liquid solution and need very little electricity compared to vapour compression system. One such system was sucessfully tried by Farber (1970). This system had a flat-plate collector having 1.49 m^2 collection area and a top header of diameter 25.4 mm. The 25.4 mm pipes, which acted as the risers, were spaced at 102 mm centres and soldered to a 20 guage iron sheet. The collector of the system had a single glass cover and

was insulated by styrofoam at the back. In addition to the usual components, such as condenser, evaporator, ice-box and heat exchanger, there was an ammonia absorbing column of shell-and-tube type and two pumps to circulate the liquid ammonia and chilled water in the evaporator. It was reported that the collector of the system collected in an average 42.2 MJ of solar energy per day and produced 12.5 kg of ice per m^2 of collector area. The overall coefficient of performance of the system was about 0.1. The yield of ice is twice what can be obtained using the intermittent cycle.

The most commonly used refrigerant-absorbent pair is ammonia-water. The criteria for the selection of absorbent, refrigerant and the refrigerant-absorbent combinations have been reported by Swartman (1978), Mansoori and Patel (1979), Durgunov, Maksudov and Vakhnidov (1981), and Tyagi and Rao (1984). A comprehensive list of the possible refrigerant-absorbent combinations has been given by Farber, Morrision and Ingley (1974).

Muradov and Shadiev (1971) built an intermittent refrigerator using ammonia-sodium chloride. This unit consisted of a generator of 2.0 m^2 double glazed flat-plate collector, a condenser and an evaporator. The system could make about 1 kg of ice per m^2 of the collector area. The NH_3-NaSCN combination with NH_3 as refrigerant has been studied by Blytas and Denials (1962) and Sargent and Beckman (1968). They reported that this combination had good properties for ice manufacture. Sargent and Beckman have also published the thermodynamic data for the pair. In another study, Swartman, Ha and Swaminathan (1975) compared the ammonia-water and ammonia-sodium thiocynate in their solar refrigeration system. For ammonia-water they obtained overall coefficient of performances of 0.05 to 0.14 and for ammonia-sodium thiocynate the values ranged from 0.11 to 0.27. They also commented that for the ammonia-sodium thiocynate system a rectifying column is not needed as with NH_3-H_2o. However, the uncertinities about the technology of these systems, such as corrosion, crystallization of the absorbent, and the maintenance of a uniform concentration of the solution still exist. The problem of choking, in the above system has been reported by Tyagi and Rao (1984). A number of other refrigerant-absorbent combinations have been examined for intermittent cycles. Some working models have been developed with various combinations, e.g. water-lithium bromide (Wards and others, 1975), ammonia-lithium nitrate (Chinnappa, 1961), R-22 - Dimethyl Formide

(Agarwal and others, 1984).

The use of solid adsorbent for ammonia in a solar powered intermittent refrigerator has been studied by Worsøe-Schmidt (1979). The demostration unit had a flat-plate collector having 4 m^2 collection area and contained a mixture of calcium chloride and Portland cement, which was used as adsorbent. On a clear day, the system had an overall coefficient of performance of 0.1 and could produce 6 kg of ice per m^2 of collector area. But the system had some problems in making adsorbent of the system continue to function. Recently, Worsøe-Schmidt (1983) has reported another system in which the solar collector is made up of eight extruded aluminum tubes and fins making a total collector surface area equal to 1.6 m^2. This system has an air-cooled condenser. This unit was tested in simulated solar conditions corresponding to a latitude of 15^0N. The heating was continued for 3 hours and the system generated 4.1 kg of ammonia in the subsequent 5 hours. On a field test during a Danish summer having clear or clear days with slight haze, an average of 3.5 kg of ammonia was produced and up to 7 kg of ice (4.37 kg of ice per m^2 of collector area) were made during the night. But there were problems like very slow adsorption of the refrigerant and swelling of the adsorbent during adsorption. The later effect causes compression of the adsorbent where adsorption is lowest, which may eventually lead to extremely hard and virtually impervious adsorbent. Moreover, the coefficient of performance of the system cannot be greater than 0.5, as the heat of reaction is nearly twice the latent heat of vaporisation, both during adsorption and regeneration. The coefficient of performance of this system has been reported to be approximately 0.15.

A promising development in solar intermittent absorption refrigeration is the use of zeolites as solid desiccant and water as refrigerant. A small commercially produced refrigerator by Tchernev (1979) based on this principle has a flat-plate collector of 0.74 m^2 containing 36 kg of natural zeolite and makes 6.8 kg of ice (9.19 kg/m^2 of collector area) with solar input of 21.6 MJ/m^2 per day. This ice is not accessible to the user as it is contained in a hermetically sealed container, but melts slowly during the day and cools an insulated box having 113 dm^3 internal volume. During the dull weather, the system produces cooling, though ice may not be formed. Recently, (Tchernev, 1984) a walk-in zeolite cooler having four modules of

collectors 2.44 m x 1.2 m each, have been used to cool a volume of 15.4 m^3. The collectors provide a cooling load of 25.14 MJ corresponding to 75 kg of ice at 40^0C ambient temperature with the average solar input of 4.5 KWh/m^2 per day. This type of cooler has been reported to be useful as an on-site refrigerator to preserve perishable produce and the tropical fruits as this system does not need electricity or any other sources of power. He has also reported an interesting use of the integrated solar zeolite system designed for milk cooling. The system has a solar collector of 1.5 m^2 collection area and cools 60 litres of milk from 35 to 15^0C during a sunny day with ambient temperatures varying between 35 to 40^0C. With this system, it is possible to store milk at temperatures between 15 to 22^0C which prevents the spoilage before pick-up.

Grenier and others (1984) have built and tested a 12 m^3 solar powered cold store room at Montpellier, in the Southern part of France. This system has 24 collectors of 0.8 m^2 each, integrated in the roof of the building. The upper surface of the collector is electroplated black crome and a layer of zeolite 13x of thickness 30 mm was distributed in the collector. The collectors are insulated with fibreglass and four vent valves are used for the air cooling of the collectors during night by natural convection. The system has water cooled shell-and-tube condenser and a copper tube evaporator. The net cold produced by this unit is reported to be sufficient for the daily rotation of 120 kg of foodstuffs for a temperature difference of 20^0C between the ambient and the storage temperature. The overall coefficient of performance of the unit varies between 0.095 to 0.105. This system is reported to have no size effect and would be suitable for units ranging from 1 m^3 to 50 m^3 cold stores.

Hinotani and others (1984) performed an experimental study of the regeneration and adsorption characteristics of the zeolite 13x-water system. They also simulated the system to obtain optimal design parameters for the design of a prototype.

3.1.2 Research of AIT in Absorption Refrigeration

Since 1974, a series of research projects in absorption refrigeration have been carried out by different researchers under the supervision of Prof. Exell. As a first step to develop a solar ice-maker, Kornsakoo (1975) constructed and successfully operated an ammonia-water intermittent refrigerator having a flat-plate solar collector area of 1.4 m^2 (see Fig. 3.4). The absorber plate of the collector was a copper sheet; and the seamless steel pipes acting as risers were soldered to it. The flat-plate collector acted as the regenerator and the absorber. A receiver in the tank of static water acted as the condenser during the regeneration mode and as an evaporator during the refrigeration mode. The water in the tank was drained during the refrigeration mode. A raised galvanized iron pipe acted as the rectifier in this system. During the refrigeration mode, the back insulation of the flat-plate collector was removed which helped in the rapid cooling of the collector and the absorption of ammonia in the solution. The system had two valves which were manually operated. To accomodate the intermittent availability of the solar energy, the regeneration was carried out during day time (Valve VA open) and refrigeration during night (Valve VB open and VA closed). The system contained approximately 15 kg of solution containing 46% ammmonia (by weight) in water. On a clear day the solution temperature was raised from 30 to 88^{0}C and 0.9 kg of ammonia was distilled and condensed at 32^{0}C. During the refrigeration cycle, the temperature of the ammonia dropped to - 7^{0}C and the overall coefficient of performance of system was 0.09, which is better than reported by Chinnappa (1962).

Jarimopas (1976) continued research on the system developed by Kornsakoo (1975). In this study, the refrigeration was produced by the evaporation of ammonia in a specially designed dry expansion coil using the hand operated valve fitted to the circuit between collector and the ammonia receiver. This system was capable of producing 1.5 kg of ice (1.1 kg per m^2 of collector area).

Soponronnarit (1977) was able to increase the yield of ammonia distilled by the following modifications in the previous system (Jarimopas, 1976). Firstly, the solar radiation input to the surface of the collector was increased by 1.2 to 1.39 times by using mirrors. Secondly, the temperature of the cooling water

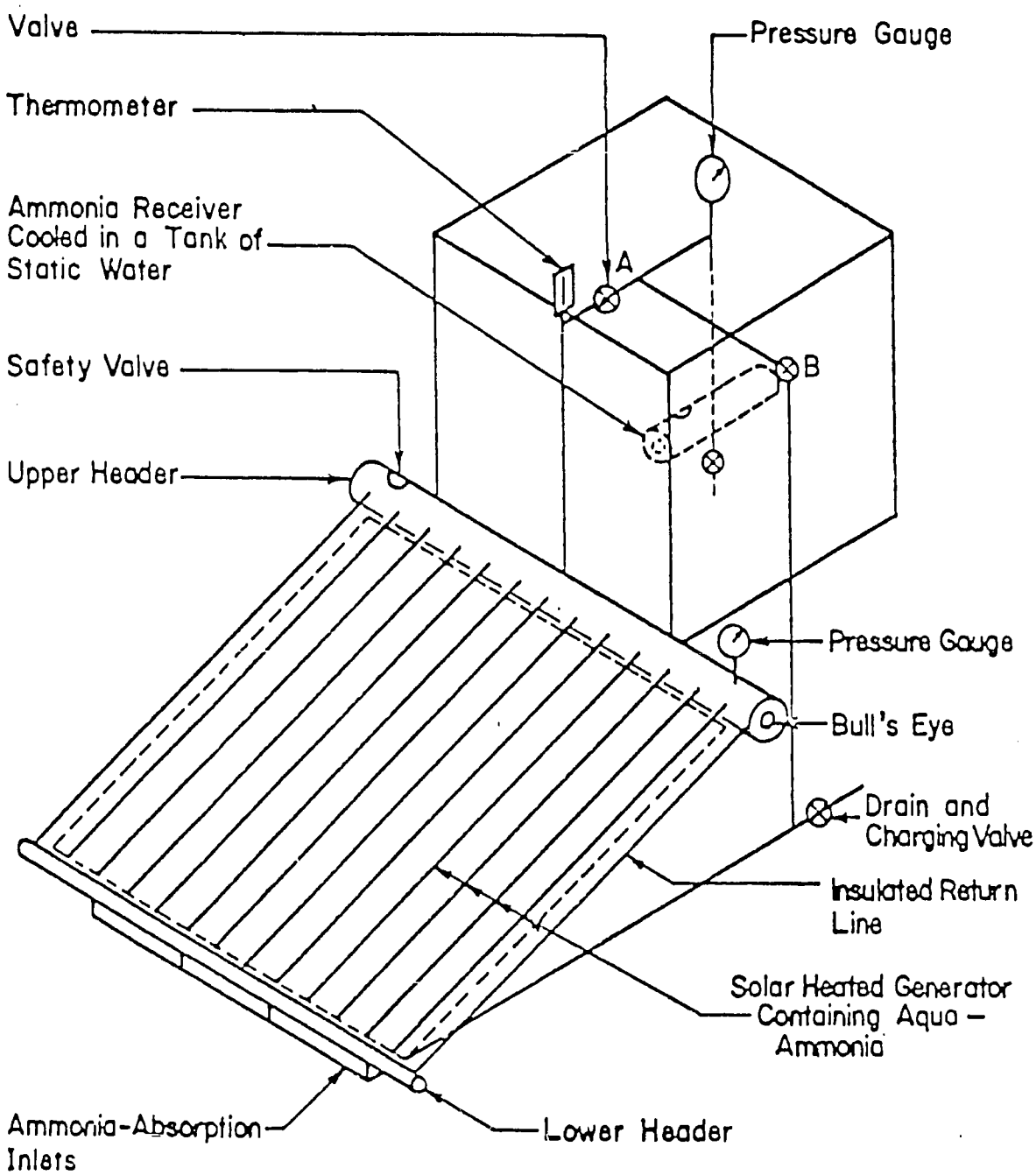

Fig. 3.4. The First Experimental Unit built by Kornsakoo (1975)

was kept almost at the average temperature at night, insulating the tank during the day and exposing it at night. This resulted in the reduction of the condensation pressure. The condensation pressure was further reduced by the addition of a condenser made up of galvanised iron pipe submerged in the tank. A check valve was also fitted to the absorption line to insure complete utilization of ammonia. The efficiency of the system was further improved using a double pipe counter flow heat exchanger to cool the vapour passing to the evaporator by the vapour coming out of the evaporator. This improved system could produce 6.4 kg of ice (4.4 kg per m^2 of collector area). This ice could keep 50 dm^3 partly filled with fruit between 9 to 13^0C overnight.

Exell and Kornsakoo (1981) designed, constructed and tested two prototypes of intermittnt ammonia-water absorption refrigerators each with two collectors of 2.5 m^2. The collectors of the Model I was of single tube-in-sheet construction, while the collectors of the Model II prototype had nonfocussing cylindrical concentrators set below finned riser tubes. The heat capacity of the collectors of the Model II was smaller. This was achieved using fewer riser tubes. The collectors were oriented towards the south and movable flat auxiliary mirrors were attached to the eastern and the western edges to enhance the solar input to the collectors during the regeneration process. Both the models were tested simultaneously, and Model I gave the better performance. On a bright day 14 kg of ammonia were distilled from a solution of 46 kg having 46% of ammonia by weight; refrigeration during the night produced over 25 kg of ice (5 kg of ice per m^2 of collector area). The use of the mirrors increased the yield approximately by 50%.

Tsai (1981) improved upon the designs previously constructed by Kornsakoo (1975) and modified further by Jarimopas (1976). He replaced the previous collector having copper sheet soldered to the seamless steel pipes, as the joint used to break due to the unequal thermal expansions of metals. The new collector was of galvanized iron sheet welded to the steel pipes. The special features of this collector/generator were the two side reservoirs and an intersecting pipe near the top of the risers (see Fig 3.5). The collector of the system had area 0.6 m^2 and contained 10 kg of ammonia-water solution (ammonia concentration 46% by weight). Auxiliary mirros were attached to the two edges along the length. The ammonia yield of the system reported was up to 2.1 times that of previous design. The

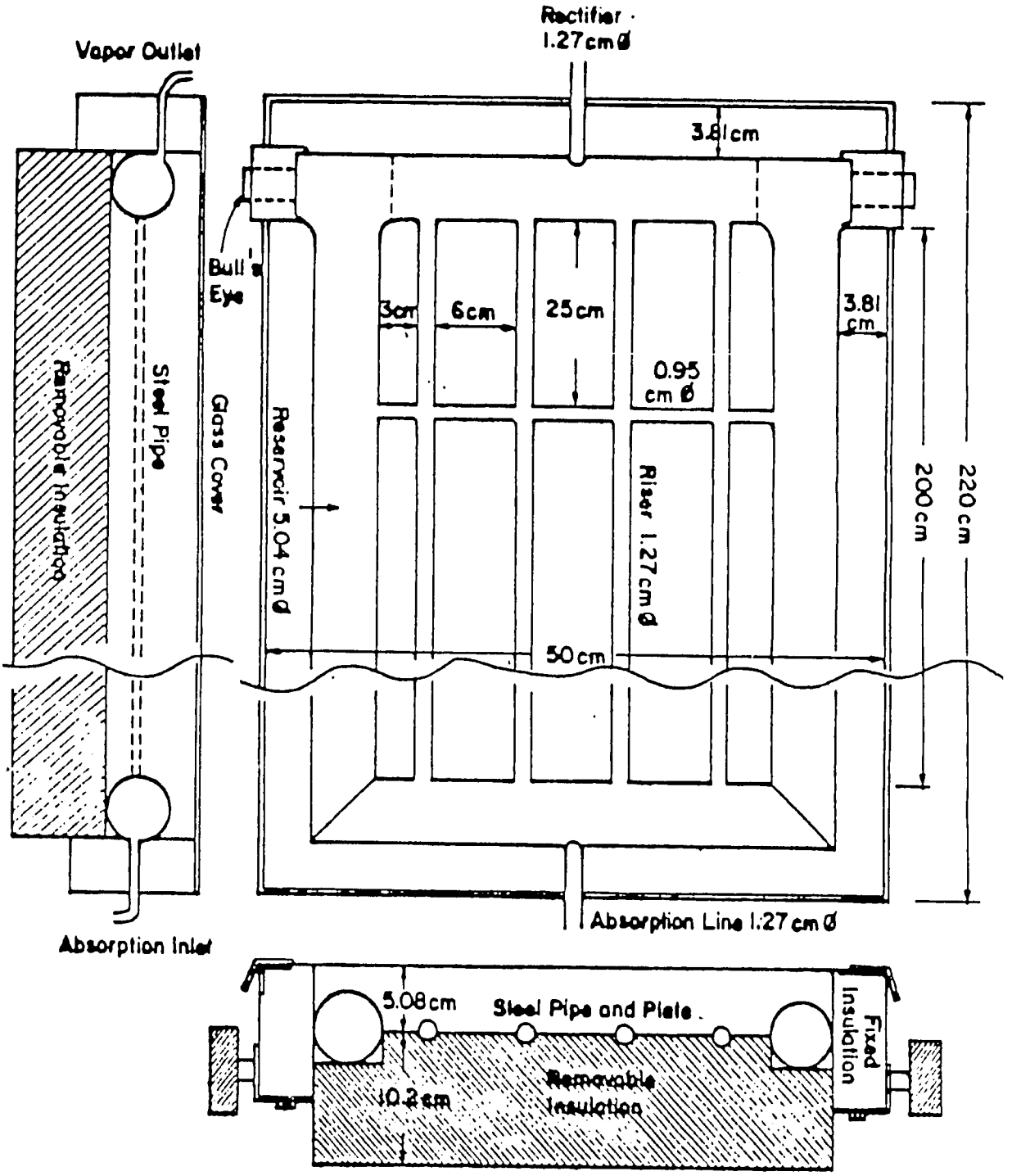

Fig. 3.5. The Special Collector Design by Tsai (1981)

special arrangement of the side reservoirs, which were not insulated, promoted faster cooling of the collector during the absorption cycle, and the refrigeration started 2 hours earlier.

Because of the slow cooling of the absorbing solution in the previous designs, Manurung (1981) tested a refrigerator using water cooling of a seperate absorber, and the top header (see Fig. 3.6). The cooling was done by natural convection of water from the static water tank. This caused faster cooling of the absorber, and the refrigeration started 2-3 hours earlier compared to the previous designs.

Forhad (1981) designed, constructed and a flooded type evaporator with capacity of 2 kg liquid ammonia at 1170 kPa, and an ice box of capacity of 5 kg attached to the collector of Tsai(1981). The experiments were carried out with hand operated valves to simulate the function of check valves. The experiments revealed that the system can function automatically if quality check valves are available.

All the previous solar powered refrigerators are hand operated and need skill to operate them, which would be a disadvantage if these refrigerators are to be used at the village level. Moreover, the hand valves need maintenance after some period. So, to replace those valves but still achieve a self-acting system, Tsai (1982) designed a special liquid seal. He fitted the liquid seals one each, in the collectors of the refrigerator Model II designed by Exell and Kornsakoo (1981). His tests revealed that the system with the liquid seal works satisfactorily but it would be better to use one liquid seal for a system of collectors. He has also reported that the copper sheet which was used in the previous designs, could be replaced by galvanized iron sheet of proper thickness with the efficiency reduction of less than 3%. This would solve the problem of cracking of joint due to unequal expansion of the materials of the collector.

The purpose behind all the previous experiments was to develop a solar powered refrigerator that could be used without auxiliary power in the remote areas to produce ice or cool storage. The latest work in the continuous series was the design, construction and the experiment of a prototype which could theoretically produce 100 kg of ice per day (Exell and others, 1984). This system has 12 flat-plate solar collector

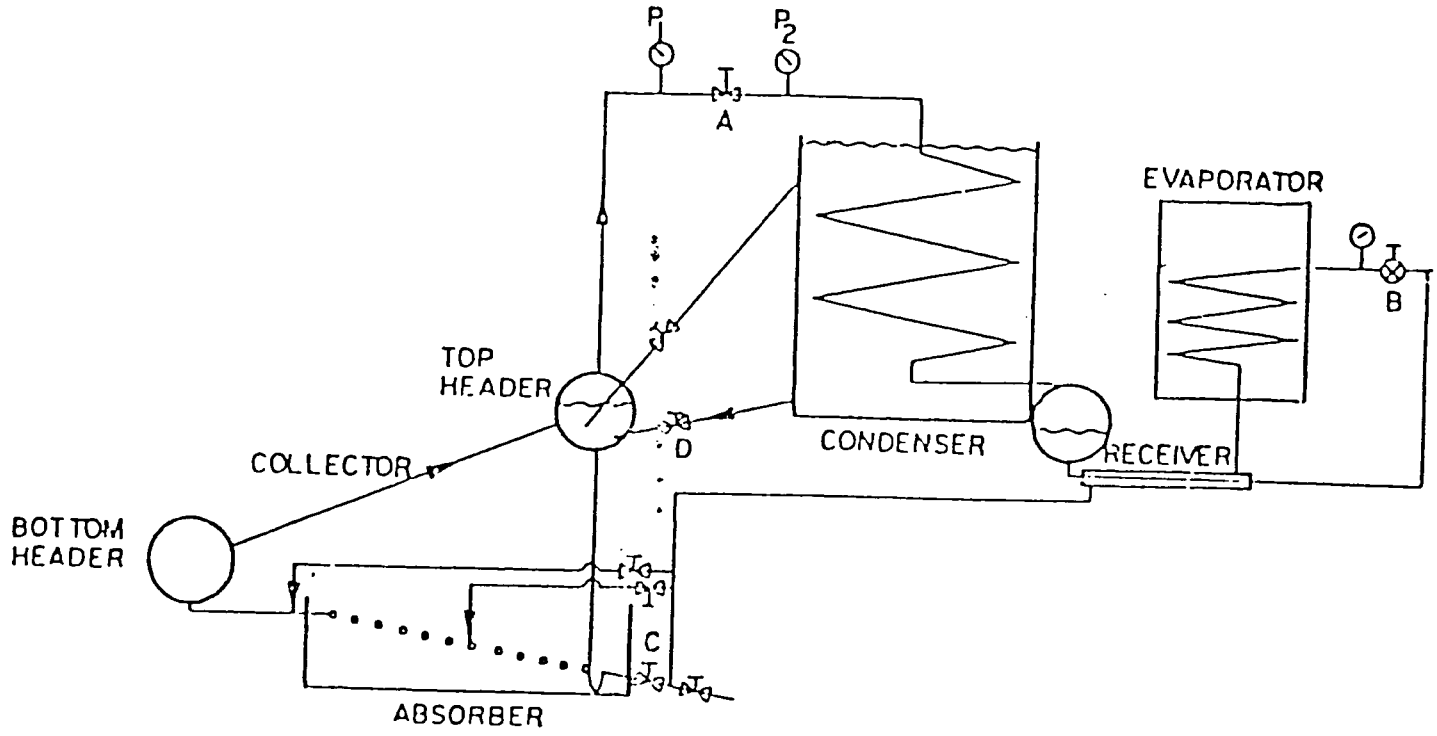

Fig. 3.6. The configuration of Solar Powered Refrigerator using improved absorption system by Manurung (1981)

panels having total collection area of 25 m^2. The surface of the collectors was coated with MAXORB Solar Foil of MPD Technology Limited, England. The special features of this design include a liquid seal to control the flow of ammonia vapour, a distributer to ensure even reabsorption of ammonia in the collectors, use of the flooded type evaporator to eliminate the need for hand operation, enlarged pipes in the solar collector to reduce the liquid in the upper header and the provision of a way to remove the back insulation. The side and top views of this system are shown in Figs. 3.7 and 3.8.

The generation process of the above system was found to have the maximum efficiency theoritically achievable in the design used. On a clear day, the system produced about 60 kg of ice instead of the origionally expected amount of 100 kg. But the investigation showed that designed amount of the ice would be attainable after redesign of the evaporator unit. Taking a pessimistic view of the system performance, the pay-back period of a commercial unit would be between 2 to 6 years depending upon the interest rate and the price of the ice. This unit could be used in remote places as no auxiliary power or manual skill are needed to operate the system.

Chen (1982) has derived a numerical computer model of the solar powered intermittent ammonia-water refrigeratior. This model predicts the amounts of ammonia distilled, and the production of ice, for designs with flat-plate collectors having one or two glass covers and selective or non-selective black plates at a variety of insolations. The model shows that the best performance would be obtained with selective black plates and one glass cover.

Exell (1983) made a detailed thermodynamic analysis of the ammonia-water liquid-vapour system. He applied this analysis to explain the heat transfer that takes place in the intermittent ammonia-water absorption refrigeration cycle. He has also described the methods of calculating the heat transfer rate to and from the collector and modelling of the system based on the analysis.

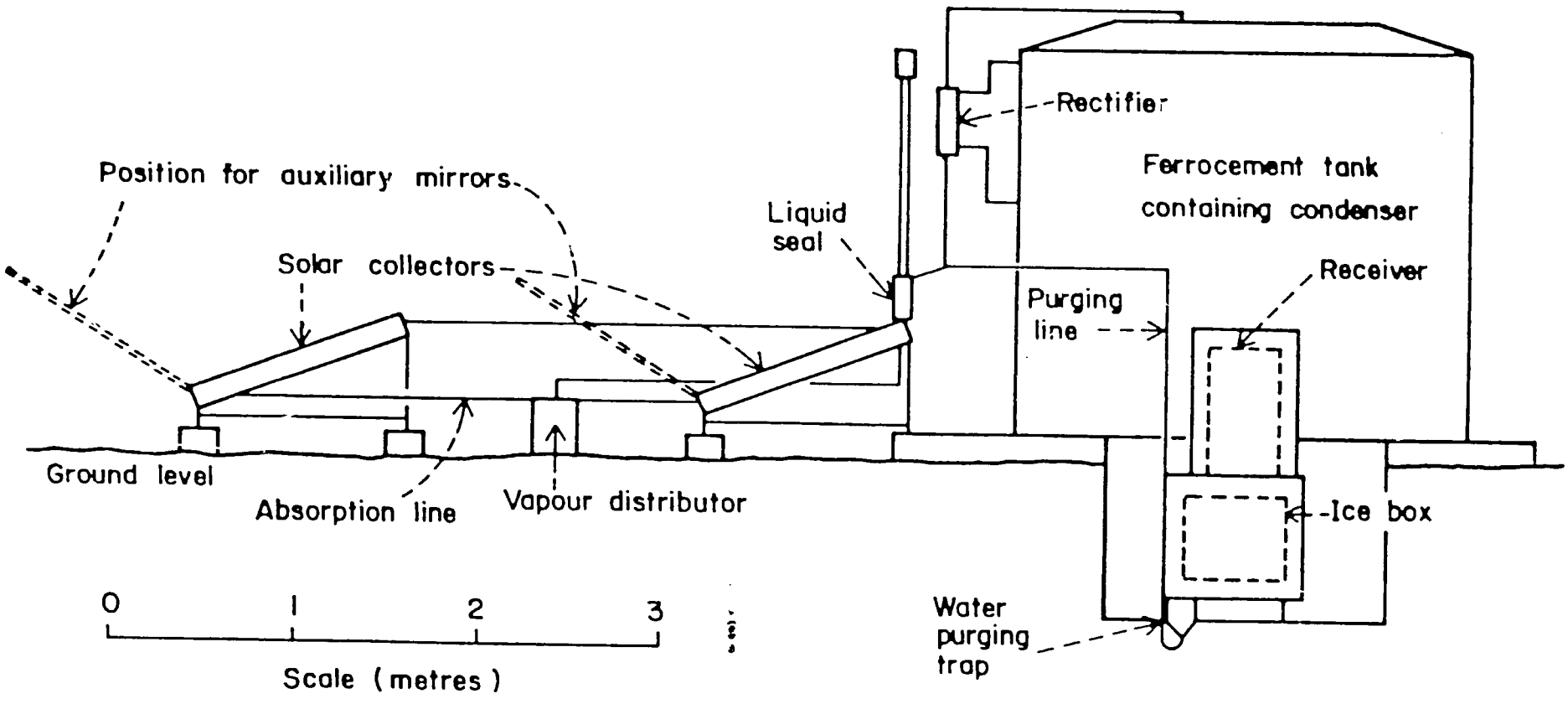

Fig. 3.7. Side view of Village-Size Solar Refrigeration System (Exell and others, 1984)

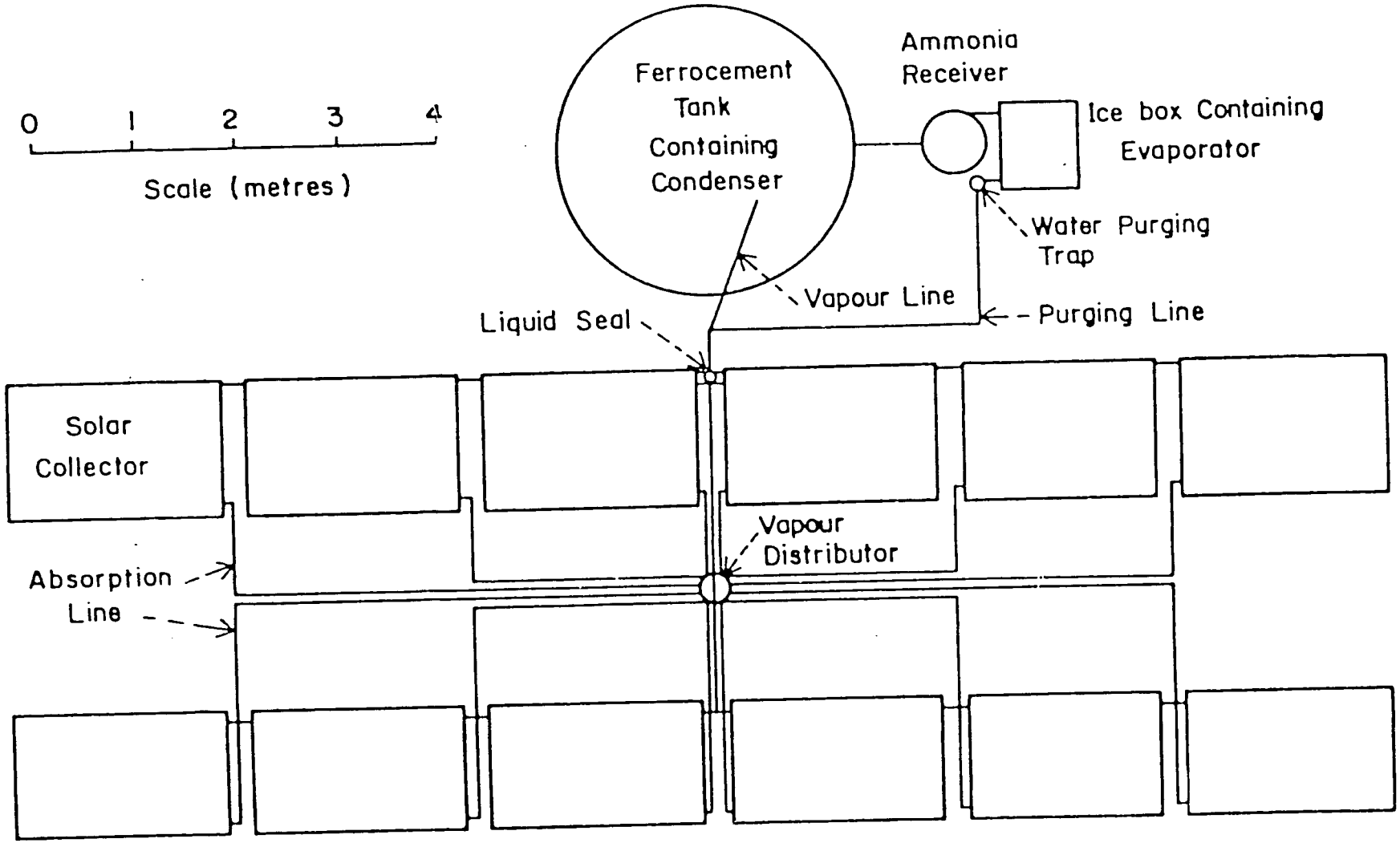

Fig. 3.8. Plan view of Village-Size Solar Refrigeration System (Exell and others, 1984)

3.1.3 Desiccant Cooling

Open cycle desiccant cooling was first suggested by Löf (1955) who proposed the use of solar energy with tryethylene glycol as the liquid desiccant. In actual practice both liquid and solid desiccants may be used and the cycle may be either intermittent or continuous.

The liquid desiccant system using solar energy for regeneration has been further studied by Wellesley-Miller (1974). This system was of continuous type and a liquid pump was used to circulate the solution. Baum and Kakabayev (1978) of the Physicotechnical Institute of Turkman Academy of Science, made an intensive study of the solar absorption refrigerating unit with rooftop regenerator. This system used lithium chloride as the desiccant. The system is reported to be expensive, and the coefficient of performanceof the system was 0.4. Collier (1979) reported a system similar to Baum. The overall daily coefficient of performance of the system is reported to be 0.09 to 0.45. Gupta and Gandhidasan (1978) built an open cycle 3-ton solar air conditioner in Madras (India), where the climate is hot and humid. The system is based on the dehumidification of air using liquid desiccant followed by evaporative cooling. The temperature of the regeneration varied between 60 and 75^{0}C which could be provided by simple flat-plate solar collectors. The overall coefficient of performance of the system is reported to be 0.2. Similar studies have been reported by Hollands (1963) using brine solution of lithium chloride, Mullik and Gupta (1974) using calcium chloride and Johannson (1979) using tryethylene glycol as liquid desiccant.

At the Asian Institute of Technology, Hock (1981) has sucessfully built a small experimental absorber (1.8 m x 1.8 m x 1 m) using calcium chloride as the liquid desiccant. The effectiveness of the absorber was found to be 77%. Rashid (1981) tested another 2 m x 0.5 m trickle type flat-plate collector to regenerate the liquid absorbent solution of calcium chloride. The maximum water desorption rate of this system was 0.468 kg/m^2 per hour at the insolation of 938 W/m^2 with 46% calcium chloride solution. Ming (1982) tested two trickle-type solar collectors to regenerate a liquid absorbent solution of calcium chloride. The water desorption rate in the flat-plate collector during fine weather was found to be 0.332 kg/m^2 per hour, which could give 1/4 ton of air conditioning. The

regeneration efficiency (ratio of energy utilized for desorption of water vapour and the solar energy intercepted by the collector) varied between 10 and 35%.

Because of the inherent problem of the leakage of the liquid desiccants and lower drying capabilities, many investigators have used solid desiccant. Solid desiccants allow more flexibility in tailoring adsorption properties which could be done by changing pore size, particle size and dopents and they can be engineered to provide a variety of isotherms (Collier, Barlow and Arnold, 1982). The most commonly used solid desiccants are lithium chloride, molecular sieve and silica gel.

Dunkle (1965) proposed a system using rotary desiccants generated by solar heated air and a rock pile as storage for back-up. Close and Dunkle (1976) proposed two adsorbent beds (silica gel or activated alumina) which work as dehumidifier and heat storage. An interesting system intensively tested by the Institute of Gas Technology, Chicago, has been reported by Rush (1976). This system consists of two unmixed streams of air that interact through two counter-rotating wheels: a heat exchanger wheel (regenerator) and a dry wheel (dehumidifier) consisting of mounted molecular sieve. The inlet air is heated and dehumidified in the dry wheel and the hot air is evaporatively cooled. The return room air gets heated in the regenerator and is further heated by solar energy to regenerate the adsorbent. A variety of rotary desiccant wheel systems have also been reported by a number of investigators (Lunde, 1976; Robinson and others, 1979; Matsuki, Tatsuoka and Tonomura, 1981; Clark, Mills and Buchburg, 1981). The operating principles of these systems are essentially similar and the drying wheels are filled or impregnated with solid desiccant such as lithium chloride, molecular sieve or silica gel. Pla Barby (1980) has developed a computer model to study the performance of the silica gel rotary regenerative dryer. In this study influences of several parameters have been investigated and the different design constraints which influence the performance of the system has been explained.

Clark, Mills and Buchburg (1981) have reported the results of the computer simulation in which a prototype scale silica gel fixed desiccant bed was tested under conditions typical of air conditioning applications. The experimental design was based on the computer code NUMIT, developed by Nienberg in the University

of California. The simulation predicts the system behaviour except for the actual adsorption rate at the beginning of the process, which was found less than predicted.

Epstein and others (1985) employed an algebric model of wave motion arising in the adibatic fixed desiccant bed dehumidification of air stream to predict the performance potential of the desiccant for air conditioning applications. This model is used to explain the increase in the cooling performance that has been realized in the case of a mixed inert-desiccant material adsorption bed. They predict an average coefficient of performance of 1.3 for a system having mixture of inert material and silica gel in the desiccant bed. But to realize that performance, the system should have a sensible heat exchanger of effectiveness greater than 85%.

Collier, Barlow and Arnold (1982) have reviewed the thermodynamics of three desiccant cooling cycles: the ventilation cycle, the recirculation cycle, and the Dunkle Cycle. In the case of the ventilation cycle, the qualitative effects of changes in the effectiveness of the individual components were analysed. On that basis, it has been seen that a coefficient of performance greater than 1 is possible in the desiccant cooling systems if component performance could be improved, specially that of the dehumidifier. This might be possible using a superior desiccant, or desiccant combinations yet to be discovered.

Barlow and Collier (1981) have suggested staging or sectioning the desiccant bed to reduce parasitic power. They have employed both psychrometric analysis and detailed computer simulations to evaluate the potential gains in the cooling performance that can be attained by using nonhomogeneous or staged beds. A staged bed of four hypothetical desiccants allowed 10% increase in the system cooling capacity, and 6.8% increase in the thermal coefficient of performance, over a packed silica gel bed. They also remark that staged beds can produce much dryer air in the adsorption process.

Lavan, Monnier and Worek (1982) have performed a second law analysis of the constant pressure open cycle desiccant cooling system to assess the potential performance. They have concluded that the reversible coefficient of performance strongly depends on the humidity ratio for open cycles, and the temperature for closed cycles. The reversible coefficient of performance of for

the ARI design conditions (indoor temp. of 26.7^0C and humidity ratio of 0.012, and outdoor temp. of 35^0C and humidity ratio of 0.142) was 4.66, but the experimental and the theoretical value was only 0.5 to 0.8, which is only 20% of the reversible value. This result shows that the coefficient of performance of the system can be further improved.

Mathiprakasam and Lavan (1980) have linearized and solved the governing equations for an adibatic dehumidifier and the results were found comparable to the nonlinear solutions. This model can be used for both rotary and the fixed bed system. This simplified model saves a lot of computer time.

Worek, Lavan (1980), and Monnier, Worek and Lavan (1981) have designed, constructed and tested a solid desiccant cooling system having two fixed beds of silica gel. The dehumidifiers are 0.6 m x 0.6 m x 0.6m each and are constructed of 80 channels lined with 64 m^2 of 1.5 mm thick silica gel sheet. The bed is cooled by air flowing in an equal number of perpendicular channels 2 mm wide (see Fig. 3.9). The cross flow of the desorption stream during adsorption cycle increased the performance by 10% in COP, 18% in moisture cycling and 28% in cooling capacity. The advantage of this system has been reported to be low parasitic power consumption and low generator temperatures.

The experimental results of a scale-model dehumidification system using silica gel and solar heated air for the regeneration has been reported by Boon-Long (1984). In this system a passively cooled roof-pond type chamber, which acts as the on-site storage for the products such as seeds which require relatively dry storage conditions was tested. For this purpose, a two-bed arrangement of silica gel was used in which each bed was regenerated for 3-4 hours each day by solar heated air (see Fig. 3.10). This system could maintain the chamber at 0.0025-0.0065 kg moisture/kg of dry air (corrosponding to 35 to 60% relative humidity) whereas the relative humidity, of the unhumidified chamber ranged up to 100%. The major limitation of the system was its short regeneration cycle which was reflected in the performance on subsquent days. So a three bed system has been proposed in which each bed could be regenerated for the whole day.

At the Asian Institute of Technology, Ming-Chau (1983) has studied a fluidized bed for air dehumidification and desiccant

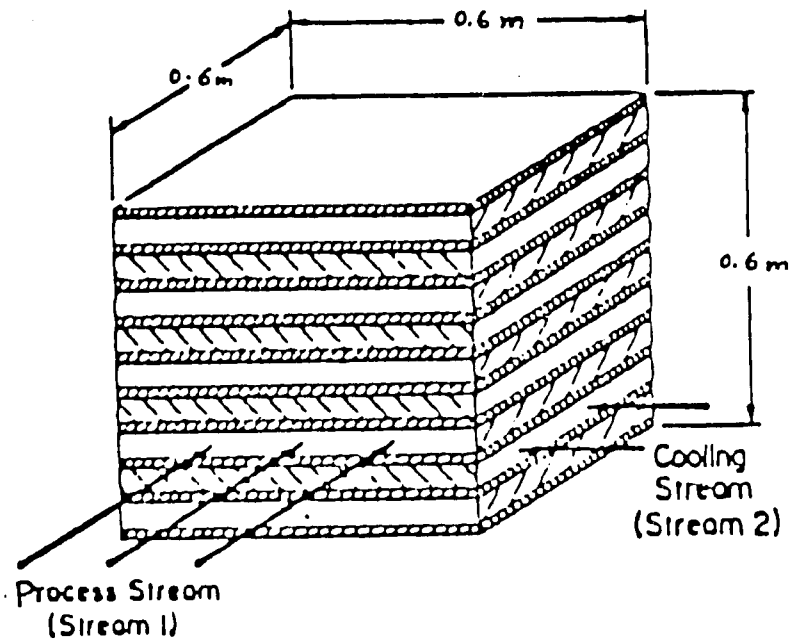

Fig. 3.9. The Cross-Cooled Desiccant Unit Designed by **Monnier, Worek and Lavan** (1980, 1981).

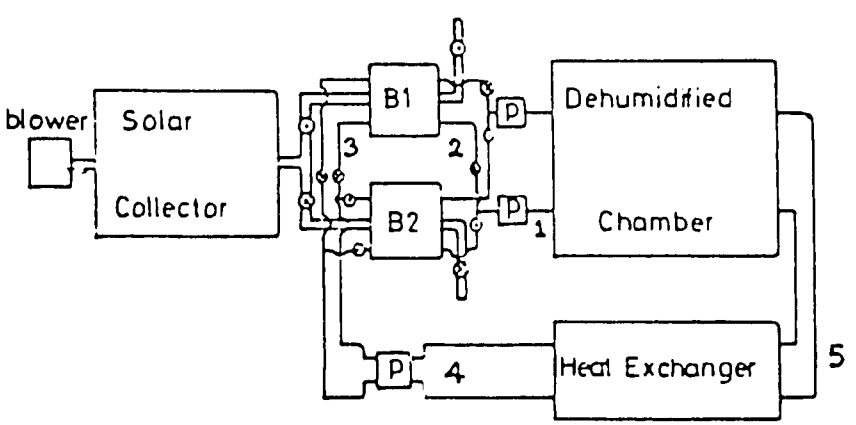

Fig. 3.10. The Experimental Unit of Solid Desiccant Dehumidifier Designed by **Boon-Long** (1984)

regeneration. A computer model of the system based on the isothermal fluidized bed was developed to study the performance of the system. An experimental unit based on the computer simulation was designed, constructed and tested. A univariate method was applied to search for the optimal coefficient of performance for a cooling effect of half a ton, and the optimal COP was around 0.57. The computer model was in agreement with the experimental result.

References

Agarwal, R.S., M.R. Aggarwal, and L.R.K. Sobti (1984). A Solar Powered R 22-DMF Intermittent Refrigeration System. In S.V. Szokolay (Ed.), Solar World Congress, Vol.1. Pergamon Press. pp. 484-489.

ASEAN (1982). ASEAN Statistical Yearbook on Food, Agriculture and Foresty, ASEAN Agricultural Development Planning Centre, Bangkok. Thailand, pp. 107-108.

Barlow, R., and K. Collier (1981). Optimizing the Performance of Desiccant Beds for Solar Regenerated Cooling. American Section of International Solar Energy Society Inc., Vol. 4.1. pp. 496-500.

Baum, V. A., and A. Kakabayev (1978). The Use of Solar Radiation for Creating Comfortable Temperature Conditions in Turkmenian SSR. Sun: Mankind's Future Source of Energy. Proc. Int. Solar Energy Congress, New Delhi, Vol. 3. Pergamon Press. pp. 1556-1560.

Bjurstrom, H., and W. Raldow (1981). The Absorption Process for Heating, Cooling and Energy Storage-An Historical Survey. Int. J. Energy Research, 5. pp. 43-59.

Blytas, G.C., and F.C. Danials (1962). Concentrated Solutions of NaSCN in Liquid Ammonia: Solubility, Density, Vapour Pressure, Viscosity, Thermal Conductance, Heat of Solution, and Heat Capacity. Journal of American Chemical Society, 84. pp. 1075.

Boon-Long, P. (1983). Crop Processing Systems in Northern Thailand. In D.S. Devapriya (1984). 'Location Modelling for Post-Harvest Handling Chain' Case of Perishable Crops grown in Northern Thailand. Research Study, Asian Institute of Technology, Bangkok. pp. 1-3.

Boon-Long, P. (1984). Storage of Agricultural Products in Passively Cooled Chambers. In S.V. Szokolay (Ed.), Solar World Congress, Pergamon Press, Oxford. pp. 57-61.

Centre for Agricultural Statistics (1984). Agricultural Statistics of Thailand Crop Year 1982/1983, Ministry of Agriculture and Co-operatives, Bangkok, Thailand. pp. 161-165.

Chantavorapap, S. (1979). Development of Solar Energy in Thailand. In Valls, J., and R.H.B. Exell (Ed.), Applications of Solar Energy in South and Southeast Asia, Renewable Energy Resources Center, Bangkok. pp. 142.

Chen, Yea-Gong (1982). A Numerical Model of the Thermodynamic Cycle in a Solar Heated Intermittent Ammonia Absorption Refrigerator. Special Study No. ET 82-8, Asian Institute of Technology, Bangkok. 88 p.

Chinnappa, J.V. C. (1961). Experimental Study of the Intermittent Vapour Absorption Refrigeration Cycle Employing the Refrigerant-Absorbent Systems of Ammonia-Water and Ammonia-Lithium Nitrate. Solar Energy, Vol. 1, No. 1. pp. 1-18.

Chinnappa, J.V.C. (1962). Performance of an Intermittent Refrigerator Operated by Flat-Plate Collector. Solar Energy, Vol. 6, No.4. pp. 143-150.

Chung, R., and J.A. Duffie (1961). Cooling with Solar Energy. Solar Energy 3, Vol. 6. pp. 20 (Paper S/82).

Clark, J.E., A. F. Mills, and H. Buchburg (1981). Design and Testing of Thin Adiabatic Desiccant Bed for Solar Air Conditioning Applications. Transactions of ASME Journal of Solar Energy Engineerring, Vol. 103, Pergamon Press. pp. 89-91.

Climatology Division (1982). Climatological Data of Thailand 30 Year Period (1951-1980), Meteorological Department, Bangkok, Thailand. pp. 3-45.

Collier, R. K. (1979). The Analysis and Simulation of an Open Cycle Absorption Refrigeration System. Solar Energy, Vol. 23. pp. 357-366.

Collier, R.K., R. S. Barlow, and F. H. Arnold (1982). An Overview of Open Cycle Desiccant Cooling Systems and Materials. ASME Transactions Journal of Solar Energy Engineering, Vol. 104. pp. 28-34.

Close, D.J., and R. V. Dunkle (1976). Open Cycle Solar Desiccant Cooling Systems. Paper Presented at Technical Conference of Institute of Engineers, Australia.

Devapriya, D.S. (1984). 'Location Modelling for Post-Harvest Handling Chain' Case of Perishable Crops.grown in Northern Thailand, Research Study, Asian Institute of Technology, Bangkok. pp. 1-3.

Dunkle, R.V. (1965). A Method of Air Conditioning. In Duffie, J.A., and W. A. Beckman (Auth.), Solar Engineering of Thermal Process, John Wiley and Sons. 574 p.

Durgunov, N. Ch., T. M. Maksudov and A.T. Vakhnidov (1981). Choice of Coolents and Absorbents for Absorption-Type Solar Refrigerator. Applied Solar Energy, Vol. 17, No. 1. pp. 32-34.

Dutting, S. (1978). Survey of Solar Powered Refrigerators. GATE Publication No. S 1/5, 11/78, German Appropriate Technology Exchange (GATE), Eschhorn. 52 p.

Eggers-Lura, A. (1978). Solar Refrigeration in Developing Countries. Technology for Solar Energy Utilization, UNIDO Development and Transfer of Technology Series, 5. pp. 107-112.

Epstein, M., M. Grolmes, K. Davidson, and D. Kosar (1985). Desiccant Cooling System Performance : A Simple Approach. ASME Transactions of Solar Energy Engineering, Vol. 107. Pergamon Press. pp. 21-28.

Exell, R.H.B., and K. Saricali (1976). The Availability of Solar Energy in Thailand, Research Report 63, Asian Institute of Technology, Bangkok, Thailand. 85 p.

Exell, R.H.B. (1981). Storage and Cooling by Solar Energy. In Harahap, F., H. Abdurrachim (Ed.), Regional Asia and Pacific Workshop on the Applications of Solar Energy in Agricultural and Post Harvest Activities, Bandung, UNESCO. pp. 71-83.

Exell, R.H.B., and S. Kornsakoo (1981). Design and Testing of a Solar Powered Refrigerator. AIT Research Report No. 126. 88 p.

Exell, R.H.B. (1983). The Theory of Simple Solar Refrigerator. Renewable Energy Review Journal, Vol. 5, No. 2. pp. 1-17.

Exell, R.H.B., S. Kornsakoo, S. Oeapipatanakul, and S. Chanchaona (1984). A Village Size Solar Refrigerator. Research Report No. 172, Asian Institute of Technology, Bangkok. 55 p.

Farber, E.A. (1970). Design and Performance of a Compact Solar Refrigeration System. Paper No. 6/58, International Energy Society Conferrence, Melbourne, Australia.

Farber, E.A., C. A. Morrision and H. A. Ingley (1974). Formation of a Data Base for the Analysis, Evaluation and Selection of a Low Temperature Solar Powered Air Conditioning System. NSF-RAN N 74.067, National Technical Information Service, Springfield. pp. 73-84.

Food and Agriculture Organization (1984). Design and Operation of Cold Stores in Developing Countries, WHO, Rome. pp. 1.

Forhad, H. (1981). The Development of Condensing and Freezing Unit for Solar Powered Refrigerator. M. Eng. Thesis, Asian Institute, Bangkok. 57 p.

Grenier, Ph., J. J. Guilleminot, M. Mester, F. Meunier, and M. Pons, (1984). Experimental Results on a 12 m^3 Solar Powered Cold Store Using the Intermittent Zeolite 13X - H_2o Cycle. In S. V. Szokolay (Ed.), Solar World Congress, Vol.1. Pergamon Press. pp. 353-358.

Gupta, M.C., and P. Gandhidasan (1978). Open Cycle 3-ton Solar Air Conditioner. Sun: Mankind's Future Source of Energy. Proc. Int. Solar Energy Congress, New Delhi, Vol. 3, Pergamon Press. pp. 1991-1996.

Hinotani, K., K. Kanatani, K. Matsumoto, and M. Kune (1984). Development of a Solar Actuated Zeolite Refrigerator. In S. V. Szokolay (Editor), Solar World Congress, Vol.1, Pergamon Press. pp. 527-531.

Hock, T.K. (1981). Design and Testing of an Absorber for a Dehumidification System Regenerated by Solar Energy. M.Eng. Thesis, Asian Institute of Technology. 64 p.

Hollands, K.G.T. (1963). The Regeneration of Lithium Chloride Brine in a Solar Still for Use in Solar Air Conditioning. Solar Energy, Vol. 7. pp. 39-42.

Jarimopas, B. (1976). Development of a Solar Powered Refrigerator. M. Eng. Thesis, Asian Institute of Technology, Bangkok. 72 p.

Johannsen, A. (1979). Design and Operation of a Liquid-Desiccant Type Solar Air Conditioning System. Sun II, Proceedings of International Solar Energy Society Silver Jubillee Congress, Vol. 1. Pergamon Press. pp. 681-685.

Kasemsap, M. (1985). Personal Communication.

Kaushik, S.C. and S. C. Bhardwaj (1982). Theoretical Analysis of Ammonia-Water Absorption Cycles for Refrigeration and Space Conditioning Systems. Int. Journal of Energy Research, 6, No. 3. pp. 205-225.

Kornsakoo, S. (1975). The Design and Development of a Solar Powered Refrigerator. M. Eng. Thesis, Asian Institute of Technology, Bangkok. 62 p.

Lavan, Z., J.B. Monnier, and W. M. Worek (1982). Second Law Analysis of Desiccant Cooling Systems. Transactions of ASME Journal of Solar Energy Engineerring, Vol. 104. Pergamon Press. pp. 229-236.

Löf, G.O.G. (1955). Home Heating and Cooling with Solar Energy. University of Wisconsin, USA. pp. 33-46.

Loo, C.C., and P.M. Bauchan (1968). A Survey of Food Industries in Thailand. Food and Agricultural Organization of United Nations. 36 p.

Lunde, P. (1976). Solar Desiccant Air Conditioning with Silica Gel. Second Workshop Proceedings on the Use of Solar Energy for Cooling of Buildings. Center for the Environment and Man. pp.280-293.

Mansoori, G.A, and V. Patel (1979). Thermodynamic Basis of Choice of Working Fluids for Solar Absorption Cooling Systems. Solar Energy, 22, No. 6. pp. 483-491.

Manurung, R.K. (1981). Design and Test of an Improved Absorption System for Solar Powered Refrigerator. M. Eng. Thesis, Asian Institute, Bangkok. 64 p.

Mathiprakasan, B., and Z. Lavan (1980). Performance Predictions for Adiabatic Desiccant Dehumidifiers Using Linear Solutions. Transactions of ASME Journal of Solar Energy Engineerring. Vol. 102, Pergamon Press. pp. 73-79.

Matsuki, K., M. Tatsuoka, and T. Tonomura (1981). On a Prototype Solid Desiccant Air Conditioner and its Performance Data. In A. R. Martinez (Ed.), Solar Cooling and Dehumidifying. Pergamon Press. pp. 159-179.

McNelis, B., and J.S. Lloyd (1982). Evaluation of Solar Refrigerators for Use in Vaccine Cold Chain. In B. McNelis (Ed.), Solar Energy for Developing Countries - Refrigeration and Water Pumping, U.K.-ISES, London. pp. 36-45.

McVeigh, J.C. (1984). Solar Cooling and Refrigeration. United Nations Educational, Scientific and Cultural Organization. 131 p.

Ming-Chau, C. (1983). Open Cycle Solid Desiccant Cooling. M. Eng. Thesis, Asian Institute of Technology, Bangkok.

Ming, Y.C. (1982). Design, Construction and Testing of a Dehumidification System Using Liquid Absorbent Solution of Calcium Chloride Regenerated by Solar Energy. M. Eng. Thesis, Asian Institute of Technology. 98 p.

Monnier, J., W. M. Worek, and Z. Lavan (1981). Testing of a Solar Powered Cooling System Using Cross-Cooled Desiccant Dehumidifications. American Section of International Solar Energy Society Inc., Vol. 4.1. pp. 505-509.

Moore, G.L., and E. A. Farber (1967). Combining the Collector and Generator of a Solar Refrigeration System. Paper 67-WA/Sol-4. American Society of Mechanical Engineers, New York.

Mullik, S.C., and M. C. Gupta (1974). Solar Desorption of Absorbent Solutions. Solar Energy, Vol. 16. pp. 19-24.

Muradov, D., and O. Shadiev, O. (1971). Testing of Solar Absorption Refrigerator. Heliotechnology, Vol. 7, No. 3. pp. 33-35.

National Statistics Office (1984) Statistical Yearbook of Thailand, Office of the Prime Minister. 590 p.

Oniga, T. (1937). Absorption Cooling Unit with Fixed Conoidal Reflector. In V.A. Stevovich (Ed.), Solar Energy, National Technical Information Service, Springfield, Virginia. pp. 327-329.

PLa Barby, F.E. (1980). An Analysis of Performance of Silica Gel Rotary Air Drier. In A. R. Martinez (Ed.), Solar Cooling and Dehumidifying, Pergamon Press. pp. 159-179.

Plank, R. (1983). Geschichteder Kalteerzengung and Koltechnic. In Sodha, M.S., S. S. Mathur, M. A. S. Malik (Ed.). Review of Reneable Energy Resources, Vol.1. Wiley Eastern Limited, New Delhi. 368 p.

Rashid, G.B. (1981). Design and Testing of a Solar Collector to Regenerate Liquid Absorbent Solution of a Dehumidification System. M. Eng. Thesis, Asian Institute of Technology. 62 p.

Robinson, H.I., S. H. Houston, W. Harper, J. M. Mitchell, M. J. Brandemuehl, and J. J. Jurinak (1979). Open Cycle Air Conditioner. Sun II, Pergoman Press. pp. 667-669.

Rush, W.F. (1976). Adsorption Phenomena as Applied to Solar Cooling. Second Workshop Proceedings on the Use of Solar Energy for Cooling of Buildings. pp. 274-279.

Saisithi, P. (1982). Present Status of Food Technology in Thailand Country Report, Institute of Food and Product Development, Kasesart University. pp. 23.

Sargent, S.L. and W. A. Beckman (1968). Theoretical Performance of an Ammonia-Sodium Thiocynate Intermittent Absorption Refrigeration Cycle. Solar Energy, Vol. 12. pp. 137-146.

Sheridon, N.R. (1981). Solar air Conditioning. In Harahap, F., H. Abdurrachim (Ed.), Regional Asia and Pacific Workshop on the Applications of Solar Energy in Agricultural and Post Harvest Activities. Bandung, UNESCO. pp. 50-70.

Soponronnarit, S. (1977). Improvement in the Efficiency of the Solar Powered Refrigerator. M. Eng. Thesis, Asian Institute of Technology, Bangkok. 70 p.

Statistical Division (1983). Handbook of Agricultural Statistics for Asia and Pacific. United Nations Economic and Social Commission for Asia and Pacific. pp.28-45.

Suthaya, K. (1985). Passive Energy Efficiency for High Density Housing in a Tropical Climate, Ph. D. Thesis, Rensselaer Polytechnic Institute, New York. pp. 23-34.

Swartman,R.K. and C. Swaminathan (1971). Solar Powered Refrigerator. Mechanical Engineering, Vol. 6. pp. 22-24.

Swartman, R.K., V. H. Ha, and A. J. Newton (1973). Survey of Solar Powered Refrigeration. The American Society of Mechanical Engineers Quarterly Transactions, 73-WA/Sol.6.

Swartman, R.K., V. Ha, and C. Swaminathan (1975). Comparision of Ammonia-Water and Ammonia-Sodium Thiocynate as the Refrigerant-Absorbent in the Solar Refrigeration System. Solar Energy, Vol. 17. pp. 123-127.

Swartman, R.K. (1978). A Survey of Cooling. In Dutting, S. (Ed.) Survey of Solar Powered Refrigerators GATE Publication No. S 1/5, 11/78, German Appropriate Technology Exchange (GATE), Eschhorn. 52 p.

Tchernev, D.I. (1979). Solar Refrigeration Using Zeolites. Proceedings of the 14 th Intersociety Energy Conservation Engineering Conference. American Chemical Society. pp. 2070-2073.

Tchernev, D.I. (1984). Use of Natural Zeolites in Solar Refrigeration. Abstract of Selected Solar Energy Technology (ASSET), 6, No. 6. pp. 21- 24.

Tomkins, R., and C. Y. Woreko-Brobby (1982). Solar Refrigeration for Developing Countries: The Prospects. In B. McNelis (Ed.), Solar Energy for Developing Countries Refrigeration & Water Pumping, UK Section of International Solar Energy Society (UK-ISES), Brigton. pp. 14- 25.

Trombe, T. and M. Foex (1964). The Production of Cold by means of Solar Radiation. Solar Energy, Vol. 1, No. 1. pp. 51-52.

Tsai, Sing-Tsu (1981). A Special Collector for Ammonia-Water Absorption Refrigeration. M. Eng. Thesis, Asian Institute of Technology, Bangkok. 66 p.

Tsai, Tian-Ho (1982). The Operation of a Solar Powered Refrigerator with Liquid Seal. M. Eng. Thesis, Asian Institute of Technology, Bangkok. 78 p.

Tyagi, K.P. and K. S. Rao (1984). Choice of Absorbent-Refrigerant Mixtures. Int. J. Energy Research, 8, No.4. pp. 361-368.

Vandendriessche, H. (1976). Tropical Fruit Processing Industry: A Case Studies of the Industry in Developing Countries, Developing Centre of the Organition for Economic Cooperation and Development, Paris. pp. 31-32.

Ward, D.S., W. S. Duff, J. S. Ward, and G. O. G. Lof (1975) Integration of Evaculated Tubular Solar Collector with Lithium-Bromide Absorption Cooling System. Proc. Int. Confer. on Solar Energy, New Delhi. pp. 1581-1585.

Wellesley-Miller, S. (1974). A Retrofittable Solar Dehudifier. Workshop Proceedings, Solar Cooling of Buildings. Los Angeles, California. p. 154.

William, D.A., G. O. G. Lof, D. A. Fester, and J. A. Duffie (1958) Intermittent Absorption Cooling System with Solar Refrigeration. Refrigeration Engineering, 66. pp. 33.

Worek, W.M. and Z. Lavan (1980). Cross-Cooled Desiccant Dehumidifier for Solar Powered Cooling Systems. American Section of International Solar Energy Society Inc., Vol. 3.1. pp. 224-227.

World Health Organisation (1972). Human Development and Public Health, WHO Tech. Rep. Ser. No. 485. pp. 28-29.

World Health Organisation (1981). Specifications for Photovoltaic Refrigerator, WHO EPI/9.81/CC.

Worsøe-Schmidt, P. (1979). A Solar-Powered Solid-Absorption Refrigeration System. Int. J. Refrig., 2. pp. 79-84.

Worsøe-Schmidt, P. (1983). Solar Refrigeration for Developing Countries Using Solid Absorption Cycle. Int. J. Ambient Energy, 4, No.3. pp. 115-124.

SIMULATION OF AN INTEGRATED HYBRID DESICCANT VAPOR-COMPRESSION COOLING SYSTEM

by

Illinois Institute of Technology
Chicago, Illinois

ABSTRACT

The performance of a desiccant, integrated, hybrid, vapor-compression cooling system is modeled numerically. The concept of hybrid cooling investigated in this paper utilizes the waste heat rejected from a vapor-compression cycle to activate a desiccant dehumidification cycle. The hybrid system consists of four major components: a compressor, an evaporator and two desiccant, integrated condensers/dehumidifiers. The equations governing the transport of heat and mass in the desiccant, integrated condenser/dehumidifiers are formulated considering air as the working fluid in the process stream and a refrigerant stream, which is cooled from superheated vapor to subcooled liquid, as the heat source during desorption; a water stream is used to remove the heat generated during adsorption. The governing equations are nondimensionalized and solved for both sorption processes using an explicit finite-difference scheme. The performance of a first generation prototype desiccant, integrated, hybrid, vapor-compression cooling system is then evaluated at ARI conditions.

62

1. INTRODUCTION

The basic concept of hybrid cooling involves two or more cooling systems that are combined or integrated to improve the overall system performance. The hybrid cooling system, which is the subject of this work, combines a vapor compression cooling system with a desiccant dehumidification system. In this system, heat rejected from the condenser in a standard vapor-compression cooling system activates a solid desiccant dehumidification cycle.

Curran[1] reviewed several schemes of hybrid refrigeration/sorption solar cooling systems. He concluded that, in general, a hybrid cooling system which uses a desiccant dehumidification cycle has two principal advantages as compared to conventional cooling systems. The design capacity of the conventional refrigeration unit is reduced and the coefficient of performance increases due to higher evaporator temperatures.

The Solar Engineering Company[2] designed, built and tested a hybrid desiccant vapor-compression cooling system. Their system had three coupled separate components, an adiabatic desiccant dehumidifier, a regenerator and a vapor-compression chiller to form the hybrid system. In such a hybrid system, the heat is transferred from one component to another through the process air streams. This restriction seriously limited the performance of the system and made the parasitic power requirements prohibitively high.

Sheridan and Mitchell[3] used a transient simulation

program (TRNSYS) to investigate a hybrid desiccant cooling system where the heat rejected in the condenser was used as the thermal source for regeneration of an adiabatic desiccant dehumidifier. They found that, for two locations in Australia, the hybrid system used 25 to 40% less energy than a vapor-compression system.

Howe, Beckman and Mitchell[4] studied several hybrid systems that use solar energy to regenerate the desiccant dehumidifier. They found that, depending on the location, a 47% to 57% in electrical savings can be achieved. Subsequently, these authors[5] extended this work to evaluate the factors that influence the performance of commercial hybrid desiccant cooling systems.

Through a cooperative arrangement between Thermoelectron, the Gas Research Institute and the Jewel Supermarkets, a hybrid cooling system similar to that considered by Howe et al[4,5] has been installed in a Jewel food store.[6]

Workers at the Solar Energy Research Institute have recently analyzed several advanced solar hybrid desiccant cooling systems.[7] They determined that a packaged solar hybrid-desiccant/vapor-compression air-conditioning system can reduce the total energy consumption by 30 to 80% when compared to conventional vapor-compression air-conditioning systems.

61

2. HYBRID DESICCANT/VAPOR-COMPRESSION COOLING SYSTEM CONCEPT

In standard vapor-compression cooling systems, the heat removed from the conditioned space and compressor work is generally rejected from the condenser to the outdoors. In the integrated hybrid cooling system investigated in this work, the heat rejected in the condenser is used to reactivate a solid desiccant, silica gel, manufactured in the form of a felt that is integrated into the condenser. This design gives good thermal contact between the desiccant and the refrigerant and enables more desiccant to be used per unit surface area of process channel.

The integrated hybrid desiccant/vapor compression air-conditioning system consists of two desiccant integrated components, termed here as a condenser/dehumidifier, one evaporator and a compressor. In the typical operation of the system, one desiccant integrated condenser/dehumidifier is regenerated and has the role of a condenser, while the other desiccant integrated component, which sorbs moisture from the process air stream, is the dehumidifier which is located upstream of the evaporator.

The air flow in the hybrid system is shown schematically in Fig. 1. Outdoor air (State 1) enters the system and is directed by a bidirectional damper to the desiccant integrated component which acts as a condenser. Water vapor is liberated from the desiccant material by the hot refrigerant and the air (State 2) at the exit of the condenser is discarded to the outdoors.

Assuming a full recirculation air-conditioning system, room air (State 3) enters the opposite side of the bidirectional damper and is directed to the dehumidifier. In the dehumidifier, the air is dried and is maintained at nearly the same dry-bulb temperature (State 4) by the secondary cooling water stream. This dry air then enters the evaporator where it is sensibly cooled and the conditioned air (State 5) is returned to the room.

Figures 2 and 3 show the refrigerant flow schematic in the hybrid air-conditioning system. The refrigerant flow is periodically switched between the two desiccant integrated components at a fixed interval to insure the adsorption and desorption processes are effective.

3. MATHEMATICAL FORMULATION

The primary component of the proposed hybrid desiccant vapor-compression cooling system is the desiccant integrated condenser/dehumidifier. This component, which is integrated with the desiccant material, has three channels, a process air channel, a secondary cooling channel that uses water and a heating channel that contains the refrigerant. In the present analysis, all streams in the condenser/dehumidifier are passed in the same direction and the sorbent is silica gel in the form of a felt that lines either wall of the process air channel. The process of manufacturing the desiccant felt was developed at IIT and has been patented.[8]

In the adsorption cycle, room air is passed through the process channel while a cooling water stream is simultaneously passed through the secondary channel. The process air is dried and the cooling stream is used to remove the heat generated during the process of adsorption. In the desorption cycle, outdoor air is passed through the process air channel while a heating stream, initially superheated refrigerant, is passed through the secondary channel for regeneration.

The analysis of the desiccant dehumidifier/condenser considers all of the dependent variables as functions of the flow direction, x_A and time, t_A. Therefore, in the process and secondary channels, only the bulk properties are considered.

3.1 Model for the Sorption Processes

The equations that govern the adsorption process in an unidirectional flow geometry are derived by considering a differential element of y_{AF} in the y direction, Δx_A in the x direction and 1/2 a_1, 1/2 a_2, 1/2 a_w in the z direction, as shown in Fig. 4. The conservation of water vapor in the process air stream and wall yields

$$\rho_1 \, a_1 \frac{\partial Y}{\partial t_A} + f \, \rho_w \, a_w \frac{\partial w}{\partial t_A} + \frac{\dot{m}_1}{n y_{AF}} \frac{\partial Y}{\partial x_A} = 0 \, . \tag{1}$$

Conservation of water between process stream and the wall gives

$$\frac{f \, m_w}{n x_{AF} y_{AF}} \frac{\partial w}{\partial t_A} = 2K_y (Y - Y_w) \, . \tag{2}$$

Conservation of energy in the wall, in the process stream and in the secondary (cooling or heating) stream yields

$$\frac{\dot{m}_1}{y_{AF}} [\frac{1}{u_1} \frac{\partial H_1}{\partial t_A} + \frac{\partial H_1}{\partial x_A}] + \frac{\dot{m}_2}{y_{AF}} [\frac{1}{u_2} \frac{\partial H_2}{\partial t_A} + \frac{\partial H_2}{\partial x_A}] + \frac{m_w}{x_{AF} y_{AF}} \frac{\partial H_w}{\partial t_A} = 0 . \tag{3}$$

The rate of energy transfer between the process stream and the wall yields

$$\frac{\dot{m}_1}{n y_{AF}} [\frac{1}{u_1} \frac{\partial H_1}{\partial t_A} + \frac{\partial H_1}{\partial x_A}] = 2K_y (Y_w - Y) \frac{\partial H_1}{\partial Y} + 2h_1 (T_w - T_1) \, . \tag{4}$$

The transfer of energy between the wall and the secondary (heating or cooling) stream gives

$$\frac{\dot{m}_2}{ny_{AF}}\left[\frac{1}{u_2}\frac{\partial H_2}{\partial t_A} + \frac{\partial H_2}{\partial x_A}\right] = 2h_2(T_w - T_2). \tag{5}$$

In order to simplify the above equations, we define new time variables as

$$t_B = t_A - (x_A/u_1), \tag{6}$$

$$t_C = t_A - (x_A/u_2). \tag{7}$$

Using Eq. (6), Eqs. (2) and (1) can be combined and simplified to

$$\partial Y/\partial x = \lambda_3(Y_w - Y). \tag{8}$$

Also, Eq. (2) may be simplified to

$$\partial w/\partial t = \lambda_2(Y - Y_w). \tag{9}$$

Substituting Eqs. (6) and (8) in Eq. (4), we obtain

$$\frac{\dot{m}_1}{ny_{AF}}\frac{\partial H_1}{\partial x_A} = \frac{\dot{m}_1}{ny_{AF}}\frac{\partial Y}{\partial x_A}\frac{\partial H_1}{\partial Y} + 2h_1(T_w - T_1). \tag{10}$$

In general, the process air enthalpy, H_1, is a function of T_1 and Y. Therefore,

$$\frac{\partial H_1}{\partial x_A} = \frac{\partial H_1}{\partial T_1}\frac{\partial T_1}{\partial x_A} + \frac{\partial H_1}{\partial Y}\frac{\partial Y}{\partial x_A}. \tag{11}$$

Substituting this result into Eq. (10) and nondimensionalizing, we obtain for the process air stream

$$\partial T_1/\partial x = T_w - T_1. \tag{12}$$

Similarly, using Eq. (7) in Eq. (5), we obtain

$$(\dot{m}_2/(ny_{AF}))(\partial H_2/\partial x_A) = 2h_2(T_w - T_2). \tag{13}$$

In the process of dehumidification where water (or possibly air) is used for the cooling stream, H_2 can be considered to be only a function of T_2. Therefore,

$$\frac{\dot{m}_2}{2nh_1 y_{AF}}\left(\frac{\partial H_2}{\partial T_2}\right)\frac{\partial T_2}{\partial x_A} = T_w - T_2 \ . \tag{14}$$

Rearranging and nondimensionalizing, we find for the process of adsorption

$$C(\partial T_2/\partial x) = T_w - T_2, \tag{15}$$

where

$$C = \dot{m}_2\ C_{p2}/(\dot{m}_1\ C_{p1}B).$$

In the process of desorption, the heat to reactivate the desiccant is supplied by the hot refrigerant in the condenser. The analysis of the desorption process considers that a superheated refrigerant enters the condenser where it is subsequently cooled and condenses. A two-phase analysis is required to model the refrigerant (the secondary stream) that is condensing in the condenser. For the single phase regions (i.e., the superheated region and the subcooled region), H_2 is a function of T_2 since the pressure is approximately constant in the condensing process. Therefore, Eq. (15) is also applicable in the single phase regions. For the two-phase region, the enthalpy of the refrigerant, H_2, is a function of the temperature T_2 and the quality, x'. Therefore, considering Eq. (13) and rearranging,

70

$$\frac{\dot{m}_2}{\dot{m}_1(\partial H_1/\partial T_1)(h_2/h_1)} \frac{\dot{m}_1(\partial H_1/\partial T_1)}{2nh_1 y_{AF}} \frac{\partial H_2}{\partial x_A} = T_w - T_2 \; ; \tag{16}$$

in nondimensional form,

$$(C/C_{p2})(\partial H_2/\partial x) = T_w - T_2 . \tag{17}$$

We now consider energy conservation in the wall [Eq. (3)]. Since the enthalpy of the wall is in general a function of the temperature and moisture content, $H_w = H_w(T_w, w)$, we obtain

$$\frac{\partial H_w}{\partial t_A} = \frac{\partial H_w}{\partial T_w}\frac{\partial T_w}{\partial t_A} + \frac{\partial H_w}{\partial w}\frac{\partial w}{\partial t_A} \quad . \tag{18}$$

Using Eqs. (4), (5) and (18) in Eq. (3),

$$\frac{m_w}{2nh_1 x_{AF} y_{AF}} \frac{\partial H_w}{\partial T_w}\frac{\partial T_w}{\partial t_A} = (T_1 - T_w) + \frac{h_2}{h_1}(T_2 - T_w) + \frac{K_y}{h_1}(Y - Y_w)Q , \tag{19}$$

where the heat of sorption, Q, is defined as

$$Q = (\partial H_1/\partial Y) - (1/f)(\partial H_w/\partial w) \tag{20}$$

and $\partial H_w/\partial w$ is called the differential heat of wetting. For a given desiccant, the heat of sorption is a function of the process stream temperature, the equilibrium moisture content and the temperature of the desiccant, as given in Ref. 9.

Rearranging the conservation equation for the wall, we obtain

$$\lambda_4(\partial T_w/\partial t) = (T_1 - T_w) + B(T_2 - T_w) + \lambda_1(Y - Y_w) . \tag{21}$$

3.2 Summary of the Governing Equations

The governing equations will now be summarized in non-dimensional form.

Mass conservation (in the process air stream):

$$\partial Y/\partial x = \lambda_3(Y_w - Y).$$

Mass transfer (from the process air to the desiccant):

$$\partial w/\partial t = \lambda_2(Y - Y_w).$$

Energy conservation (in the wall):

$$\lambda_4(\partial T_w/\partial t) = (T_1 - T_w) + B(T_2 - T_w) + \lambda_1(Y - Y_w).$$

Energy transfer (between process stream and the wall):

$$\partial T_1/\partial x = T_w - T_1.$$

Energy transfer during adsorption (between wall and the secondary stream):

$$C(\partial T_2/\partial x) = T_w - T_2.$$

Energy transfer during desorption in the single-phase region

$$C(\partial T_2/\partial x) = T_w - T_2;$$

in the two-phase region:

$$(C/C_{p2})/(\partial H_2/\partial x) = T_w - T_2.$$

3.3 Material Physical and Thermodynamic Properties

The quantity $\partial H_1/\partial T_1$ is the specific heat of moist process air. The enthalpy of moist air was curve-fitted[8] and is

$$H_1 = 1.00465T_1 + Y(2467.47 + 1.8837T_1) \ . \qquad (22)$$

Thus, the specific heat of moist air varies only with the humidity ratio Y. However, the typical variation of the humidity ratio Y in this analysis would cause only a 0.7% change in the process air stream specific heat. Therefore, the specific heat of the process air is assumed to be a constant value of 1004.6 J/(kg K).

During the adsorption process, the specific heat of the cooling stream, which is water, is also a weak function of temperature. Therefore, it is also treated as a constant in this analysis. The value used is 4186 J/(kg K).

During the desorption process, the refrigerant, R-22, is cooled from superheated vapor to saturated liquid. The viscosity, the thermal conductivity and the liquid specific heat for the single-phase refrigerant are calculated using equations given by Flower.[10] The specific heat of vapor refrigerant, C_{pvsh}, is evaluated using an equation developed by Kartsounes and Erth.[11]

The vapor pressure and enthalpy of refrigerant R-22 is determined using curve-fitted property data developed by Downing.[12] All of the property equations used in the analysis are presented in Appendix A.

The equilibrium sorption characteristics of the desiccant material, silica gel, used in this study are shown in Fig. 5. The equilibrium relative humidity was curve-fitted and the results used in this analysis are

$$\phi = \alpha_w(T_w)w_{eq} + \beta_w(T_w)w_{eq}^2, \tag{23}$$

$$Y_w = 0.622\ \phi/(T_f - \phi), \tag{24}$$

where,

$\alpha_w(T_w) = 1.4331 - 0.0168678\ T_w$, $\beta_w(T_w) = 2.3174 - 0.0264006\ T_w$, $T_f = 10^s$, $s = 2.21429 - 7.5\ T_w/(237.3 + T_w)$.

The heat of sorption of the solid desiccant used in this study was determined using the method presented in Ref. 9. It was determined, that over an adsorption/desorption cycle, the heat of sorption varied by less than 4%. Therefore, constant heats of sorption of 2700 kJ/kg H_2O and 2650 kJ/kg H_2O were used in the adsorption and desorption processes respectively.

3.4 Heat Transfer Coefficients

In the adsorption process, the flow of air and water are considered to be laminar and fully-developed, since the length to diameter ratios of the channels are large. The ratio of the heat transfer coefficients, B, for the adsorption process is also assumed to be constant, since the variation in the thermal properties of the process air and the cooling water within the temperature ranges encountered in this study are small.

In the desorption process, the heat transfer coeffi-

cient in the refrigerant stream varies depending on the phase of the refrigerant. Therefore, the refrigerant heat-transfer coefficients are calculated for each phase separately. The average heat transfer coefficient for superheated vapor is calculated using correlations given by Hiller and Glicksman.[13] The heat transfer coefficient of the refrigerant in the subcooled region is calculated using the Dittus-Boelter correlation if the flow is turbulent[14] or the fully-developed laminar correlation. The local heat-transfer coefficient, h(x'), for two-phase refrigerant in the condenser is calculated as a function of the quality using the correlations presented by Travis.[15] A summary of the heat transfer correlations used in the simulation are presented in Appendix B.

4. SOLUTION TECHNIQUE

The governing differential equations for the hybrid desiccant dehumidifier/condenser are nonlinear. The source of nonlinearity is the equilibrium sorption isotherms of the desiccant material. A finite-difference numerical solution is used to solve the equations. The finite-difference method uses a two step forward difference formula in time and a three-point sided difference formula in space. Both schemes have an error which is proportional to the time or space step squared.

4.1 Solution for the Desorption Process

The schematic of the system with the condenser in the desorption mode is shown in Fig. 6. During the desorption process, the moisture in the desiccant integrated condenser is removed by outdoor air. The air passes through the process channel removing the moisture from the desiccant bed and then it is discharged to the outdoors. Simultaneously, the refrigerant, at the exit of the compressor, passes through the secondary refrigerant channel exchanging heat with the desiccant bed. The refrigerant then is directed to the expansion valve in the system. During the desorption process, the refrigerant in the condenser changes phase and the refrigerant side calculations are separated into computations for the superheated, two-phase and subcooled regions.

The temperature and enthalpy of the refrigerant entering the condenser is calculated from the given operating

conditions of the compressor, T_e, T_c and η. The analysis is restricted to no superheating in the evaporator, minimal subcooling in the condenser and negligible pressure losses in the condenser, evaporator and associated piping.

A flowchart showing the methodology of the solution for the desorption process is shown in Fig. 7.

4.2 Solution for the Adsorption Process

The details of the system with the dehumidifier in the adsorption mode is shown in Fig. 8. The process air from the room is drawn at the comfort temperature and humidity (State 3) and is first sent to the dehumidifier, while the cooling stream, water in this analysis, is passed through the secondary channel and discarded to the outdoors. The process air leaves slightly warmer and at a lower humidity (State 4). The air then is sensibly cooled to the desired condition by the evaporator (State 5). Finally, the conditioned air is returned to the room. See Fig. 9 for the air state points corresponding to the standard and hybrid vapor compression systems.

4.3 Periodic Steady-State Operation

The system simulation, which included the successive simulation of desorption and adsorption coupled with the performance of a vapor-compression system, is said to be under periodic steady-state operation, when the newly computed temperatures and humidity ratios are within a specified tolerance of the previous values at successive cycles.

Guessing the initial conditions of the bed at the

beginning of operation is needed, since these initial conditions are not readily known.

5. HYBRID DESICCANT COOLING SYSTEM PERFORMANCE

An initial design set of input data and operating conditions are considered for a first generation prototype system simulation. The program has been written such that the inlet conditions of process air, cooling water and the operating conditions of the refrigerant unit are constant and are not time dependent. However, the formulation is not restricted, and can easily handle variable inlet and operating conditions.

The input data for space variables in the first generation prototype are: actual channel length (x_{AF}) = 0.1 m; actual channel depth (y_{AF}) = 0.3 m; process channel width (a_1) = 0.0015 m; secondary channel width (a_2) = 0.0015 m; thickness of silica gel felt ($a_w/2$) = 0.002 m; fraction of desiccant in the wall (f) = 0.5; wall density (ρ_w) = 1000 kg/m^3; number of channels (n) = 80. Input data for operating conditions are: mass flowrate of process air during adsorption = 0.0556 kg/sec; mass flowrate of process air during desorption = 0.0556 kg/sec; mass flowrate of cooling water = 0.0628 kg/sec; +temperature of air in the conditioned space = 26.7°C; +humidity ratio of air in the conditioned space = 0.0114 kg H_2O/kg dry air; +temperature of ambient air = 35°C; +humidity ratio of ambient air = 0.0142 kg H_2O/kg dry air; temperature of cooling water = 27°C; saturated condensing temperature = 50°C; saturated evaporating temperature = 10°C; compressor isentropic efficiency = 0.7; actual sorption time = 10.0 min.

+ARI conditions

Figures 10 and 11 show the exit temperature and humidity ratio of the process air leaving the condenser during desorption and the dehumidifier during adsorption. At the beginning of desorption, the process air leaves at a moderately low temperature and a low humidity ratio, and then undergoes a very rapid change in both temperature and humidity ratio. Following this period, the temperature and the humidity ratio increases very slightly until the end of each process.

Similarly, at the beginning of adsorption, there occurs a period of adjustment during which the temperature and the humidity ratio of the process air decrease rapidly. Following this period, the temperature and the humidity ratio decreases slightly until the end of the process. The adjusting period of the desorption is approximately two times longer than that of the adsorption.

The time-dependent results of Figs. 10 and 11 are also presented on a psychrometric chart, shown in Fig. 12, for clarity.

Figure 13 shows the exit temperatures of the refrigerant during desorption and of cooling water during adsorption. At the beginning of desorption, the refrigerant leaving the condenser is subcooled and then rapidly approaches the saturated liquid state. During the adsorption, the cooling water initially leaves the condenser at a moderate temperature and then decreases rapidly. Following

a brief period of adjustment, the exit temperatures of the cooling water and the process air are almost invariant.

The exit enthalpy of the refrigerant leaving the condenser is shown in Fig. 14. The maximum exit enthalpy is designed to approach but not to exceed the saturated liquid enthalpy at the given condensing temperature. This will enable liquid to be present at the inlet to the expansion valve.

The rapid changes of the variables during a short time after the beginning of adsorption/desorption required that a very fine time mesh be used in the early stages of the numerical solution. After that period of rapid changes, the time step was increased to reduce computational time.

The performance of the hybrid desiccant/vapor-compression cooling system at ARI design conditions may be summarized as follows: coefficient of performance = 5.2; cooling capacity = 22 kJ/kg dry air; moisture cycled = 0.021 kg H_2O/kg desiccant; improvement in COP over a vapor-compression system (operating with the same evaporator and condenser temperatures) = 35%; improvement in COP over a vapor-compression system (operating with the same level of dehumidification as the hybrid system) = 60%.

6. CONCLUSIONS

The theoretical analysis for a desiccant integrated, hybrid, vapor cooling system was developed and the performance of a first generation prototype was determined using R-22 as the refrigerant.

The results of the prototype hybrid integrated vapor compression cooling system show that a 60% overall improvement in the coefficient of performance is achieved at ARI design conditions for the same level of dehumidification. This indicates that a desiccant integrated, hybrid, vapor-compression cooling system has 60% more capacity than a standard vapor-compression system for the same power input.

7. NOMENCLATURE

a_1	process channel spacing, m
a_2	cooling/heating channel spacing, m
a_w	twice the thickness of the desiccant felt, m
B	h_2/h_1
C	constant defined in Eq. (15)
C_{p1}	specific heat of stream 1, J/(kg K)
C_{p2}	specific heat of stream 2, J/(kg K)
C_{pvsh}	specific heat of superheated refrigerant, J/(kg K)
C_{wR}	reference wall specific heat = 1000 J/(kg K)
C_{wP}	dry wall specific heat = 920 J/(kg K)
COP	thermal coefficient of performance
D	tube diameter, m
F	function defined by Eq. (B.3.3)
F_2	function defined by Eq. (B.3.4)
f	fraction of desiccant in the wall, kg S.G./kg wall
G_r	refrigerant mass flux, kg/s
H_1	enthalpy of the process stream, kJ/kg
H_2	enthalpy of the cooling/heating stream, kJ/kg
H_{sl}	saturated liquid refrigerant enthalpy, kJ/kg
H_{sv}	saturated vapor refrigerant enthalpy, kJ/kg
H_w	enthalpy of the wall, J/kg
h_1	process stream heat transfer coefficient, $W/(m^2K)$
h_2	heating or cooling stream heat transfer coefficient, $W/(m^2K)$
K_y	mass transfer coefficient, $kg/(m^2s)$
k	refrigerant thermal conductivity, W/(m K)
$\dot{m}_1$	total process stream mass flowrate, kg/s
$\dot{m}_2$	total heating/cooling stream mass flowrate, kg/s
m_w	total mass of the wall in the dehumidifier, kg $= \rho_w a_w n x_{AF} y_{AF}$
Nu	Nusselt number
n	number process, cooling/heating channels
P_{sat}	saturation partial pressure of refrigerant, kPa
Pr	Prandtl number
Q	heat of sorption, kJ/kg H_2O
Re	Reynolds number
T_1	process stream temperature, °C
T_2	cooling/heating stream temperature, °C
T_w	wall temperature, °C
t	nondimensional time $= 2nh_1 x_{AF} y_{AF} t_A/(m_w C_{wR})$

t_A	actual time, s
t_B	time variable defined by Eq. (6)
t_C	time variable defined by Eq. (7)
u_1	process stream mean velocity, m/s
u_2	cooling/heating stream mean velocity, m/s
w_{eq}	moisture content of the desiccant material, kg H_2O/kg desiccant
X_{tt}	function defined by Eq. (B.3.1)
x	nondimensional process channel position $= 2nh_1 y_{AF} x_A/(\dot{m}_1(\partial H_1/\partial T_1))$
x_A	actual process channel position, m
x_{AF}	actual process channel length, m
x'	refrigerant quality, kg vapor/kg total
Y	process channel humidity ratio, kg H_2O/kg dry air
Y_w	humidity ratio of air in equilibrium with the desiccant material, kg H_2O/kg dry air
y_{AF}	actual dehumidifier width, m

Greek Symbols

η	isentropic efficiency of the compressor
λ_1	constant used in Eq. (21) $= K_y Q/h_1$
λ_2	constant used is Eq. (9) $= K_y C_{wR}/(fh_1)$
λ_3	constant used in Eq. (8), inverse of Lewis Number $= (K_y/h_1)(\partial H_1/\partial T_1) = 1$
λ_4	constant used in Eq. (21) $= (\partial H_w/\partial T_w)/C_{wR}$ $= (C_{wP} + w_{eq} f)/C_{wR}$
μ_ℓ	liquid refrigerant absolute viscosity, kg/(s m)
μ_v	vapor refrigerant absolute viscosity, kg/(s m)
ρ_1	process air density, kg/m^3
ρ_w	wall density, kg/m^3
ϕ	relative humidity

Subscripts

D	hydraulic diameter
ℓ	liquid phase
s	saturated state
v	vapor phase

64

8. APPENDIX A

The saturation vapor pressure and enthalpy of refrigerant R-22 were calculated using the following curve-fits given by Downing:[12]

$$\log_{10} P_{sat} = A_1 + \frac{A_2}{T} + A_3 \log_{10} A_7 T + A_4 T$$

$$+ A_5 \left(\frac{A_6 - T}{T}\right) \log_{10} [(A_6 - T) A_7], \qquad (A.1)$$

where the temperature T is in K, $A_1 = 3.0196062 \times (10^1)$, $A_2 = -2.13621848 \times (10^3)$, $A_3 = -7.86103122$, $A_4 = 3.94316902 \times (10^{-3})$, $A_5 = 4.45746703 \times (10^{-1})$, $A_6 = 378.39$, $A_7 = 1.8$.

For an isentropic change of state in the superheated region from a saturated vapor state, T_1 and H_1 to T_{2is}

$$H_{2is} - H_1 = \sum_{n=1}^{3} B_n (T_{2is}^n - T_1^n) + (T_r - T_1) \sum_{n=1}^{2} C_n (T_{2is}^n - T_1^n), \qquad (A.2)$$

where $B_1 = 9.8364 \times (10^{-2})$, $B_2 = 1.526829 \times (10^{-3})$, $B_3 = -1.959142 \times (10^{-6})$, $C_1 = -3.930885 \times (10^{-3})$, $C_2 = 9.352825 \times (10^{-6})$, $T_r = 272.22$ K. For saturated vapor refrigerant (R-22),

$$H_{sv} = H_{sv,ref} + \sum_{n=1}^{3} D_n (T^n - T_{ref}^n), \qquad (A.3)$$

where $D_1 = -4.4564$, $D_2 = 1.8597 \times (10^{-2})$, $D_3 = -2.3880 \times (10^{-5})$, $T_{ref} = 277.8$ K, $H_{sv,ref} = 406.23$ kJ/kg. For saturated liquid refrigerant (R-22),

$$H_{s\ell} = H_{s\ell,ref} + \sum_{n=1}^{3} E_n (T^n - T_{ref}^n) \qquad (A.4)$$

where $E_1 = 4.0835$, $E_2 = -1.1631 \times (10^{-2})$, $E_3 = 1.5402 \times (10^{-5})$, $T_{ref} = 277.8$ K, $H_{sl,ref} = 205.42$ kJ/kg.

9. APPENDIX B

All correlations used to calculate the heat transfer in the refrigerant stream are presented as follows.

The average heat transfer coefficient for superheated vapor is determined using the correlation determined by Hiller and Glicksmann.[13] This relation is

$$\overline{Nu}_D = C_1 \, Re_D^{C_2} \, Pr^{1/3} \tag{B.1}$$

where

$$C_1 = \begin{cases} 1.10647 & \text{for } Re_D < 3500, \\ 3.5194 \times 10^{-7} & \text{for } 3500 < Re_D < 6000, \\ 0.01080 & \text{for } Re_D > 6000; \end{cases}$$

$$C_2 = \begin{cases} -0.78992 & \text{for } Re_D < 3500, \\ 1.03804 & \text{for } 3500 < Re_D < 6000, \\ -0.13750 & \text{for } Re_D > 6000. \end{cases}$$

The Dittus-Boelter correlation[14] given by Eq. (B.2) is used to determine the heat transfer coefficient for the turbulent flow of subcooled liquid refrigerant:

$$\overline{Nu}_D = 0.023 \, Pr^{C_r} \, Re_D^{0.8}. \tag{B.2}$$

The value of $C_r = 0.3$ was used for cooling (and $C_r = 0.4$ for heating). In both of the two equations, Reynolds number is defined as,

$$Re_D = G_r \, D/\mu, \tag{B.2.1}$$

where the viscosity in Eq. (B.1) is defined as $\mu = \mu_v$; in Eq. (B.2), the viscosity is defined as $\mu = \mu_\ell$.

In the two-phase region, the correlations presented by Travis[15] are used to determine the heat transfer coefficient

$$\overline{Nu}_D' = \frac{h'D}{k_\ell} = \begin{cases} \dfrac{F(X_{tt})}{F_2} Re_{D,\ell}^{0.9} Pr_\ell & \text{for } F(X_{tt}) < 1.0, \\ F(X_{tt})^{1.15} Re_{D,\ell}\, Pr_\ell & \text{for } 1.0 < F(X_{tt}) < 15, \end{cases} \tag{B.3}$$

where

$$X_{tt} = \left(\frac{\mu_\ell}{\mu_v}\right)^{0.1} \left(\frac{\rho_v}{\rho_\ell}\right)^{0.5} \left(\frac{1-x'}{x'}\right)^{0.9}, \tag{B.3.1}$$

$$Re_{D,\ell} = \frac{G_r\, D(1-x')}{\mu_\ell}, \tag{B.3.2}$$

$$F(X_{tt}) = 0.15\,\frac{1}{X_{tt}} + 2.85\, X_{tt}^{-0.476}, \tag{B.3.3}$$

$$F_2 = \begin{cases} 0.707\, Re_{D,\ell}^{0.5}\, Pr_\ell & \text{for } Re_{D,\ell} < 50, \\ 5.0\, Pr_\ell + 5.0\, \ell n[1.0+Pr_\ell(0.09636\, Re_{D,\ell}^{0.585} - 1.0)] & \text{for } 50 < Re_{D,\ell} < 1125, \\ 5.0\, Pr_\ell + 5.0\, \ell n(1+5.0 Pr_\ell) + 2.5\, \ell n(0.00313\, Re_{D,\ell}^{0.812}) & \text{for } Re_{D,\ell} > 1125; \end{cases}$$

here, Pr_ℓ and $Re_{D,\ell}$ are calculated based on thermal properties of saturated liquid at the given saturated temperature.

For the case of fully-developed laminar flow of either water, refrigerant or air, the following correlation was used: $\overline{Nu} = 8$.

10. REFERENCES

1. H.M. Curran, "Hybrid Refrigeration/Sorption Solar Cooling Systems," Department of Energy Report, ICS-30202 (1979).

2. Solar Engineering Co. Project Staff, "Device to Reduce Air-Conditioning Loads by Use of Waste Heat for Dehumidification," Department of Energy Report, DE84000317 (1983).

3. J. Sheridan and J.W. Mitchell, Proc. of the Annual Meeting of AS/ISES (1982).

4. R.R. Howe, W.A. Beckman and J.W. Mitchell, Proc. of the Annual Meeting of AS/ISES (1983).

5. R.R. Howe, W.A. Beckman and J.W. Mitchell, Proc. of the 1983 I.E.C.E.C. Meeting.

6. B. Cohen, A. Levine and R. Arora, "Field Development of a Desiccant Based Space-Conditioning System," Gas Research Institute Report, TE 4308-42-83 (1983).

7. D. Schlepp, and K. Schultz, "Analysis of Advanced Solar Hybrid Desiccant Cooling Systems for Buildings," Solar Energy Research Institute Report, DE85000540 (1984).

8. D. Gidaspow, Z. Lavan, and M. Onischak, "Thermally Regenerative Desiccant Element," U.S. Patent No. 4,341,5[illegible], (1982).

9. B. Mathiprakasam, "Performance Predictions of Silica Gel Desiccant Cooling Systems," Ph.D. Thesis, Illinois Institute of Technology (1980).

10. J.E. Flower, "Analytical Modeling of Heat Pump Units as a Design Aid and for Performance Prediction," Lawrence Livermore Laboratory Report, UCRL-52618 (1978).

11. G.T. Kartsounes and R.A. Erth, ASHRAE Trans., 77, 88 (1971).

12. R.C. Downing, ASHRAE Trans., 80, 158 (1974).

13. C.C. Hiller and L.R. Glicksman, "Improving Heat Pump Performance via Compressor Capacity Control - Analysis and Test," MIT Energy Laboratory Report, Vols. I and II, MIT-EL 76-001 (1976).

14. F.W. Dittus and L.M.K. Boelter, Univ. of Calif., Berkeley, Publ. Eng. 2, 443 (1930).

15. D.P. Travis, W.M. Rohsenow and A.B. Barow, "Forced-Convection Condensation Inside Tubes: A Heat Transfer Equation for Condenser Design," ASHRAE Trans., 79, 157 (1973).

10. LIST OF FIGURES

Fig. 1. Schematic of the airflow in the integrated hybrid desiccant cooling system.

Fig. 2. Refrigerant-flow schematic (Mode 1).

Fig. 3. Refrigerant-flow schematic (Mode 2).

Fig. 4. Integrated dehumidifier/condenser element.

Fig. 5. Equilibirium sorption isotherms of the silica gel desiccant.

Fig. 6. Desorption mode system schematic.

Fig. 7. Solution methodology for the desorption process.

Fig. 8. Adsorption mode system schematic.

Fig. 9. Comparison of a standard and an integrated hybrid desiccant vapor-compression system.

Fig. 10. The temperatures at the exit of the condenser during desorption and the dehumidifier during adsorption.

Fig. 11. The humidity ratios at the exit of the condenser during desorption and the dehumidifier during adsorption.

Fig. 12. The time dependent outlet states during adsorption (dehumidifer) and desorption (condenser).

Fig. 13. The exit temperatures of the refrigerant during desorption (condenser) and water during adsorption (dehumidifier).

Fig. 14. The time dependent refrigerant enthalpy at the exit of the condenser.

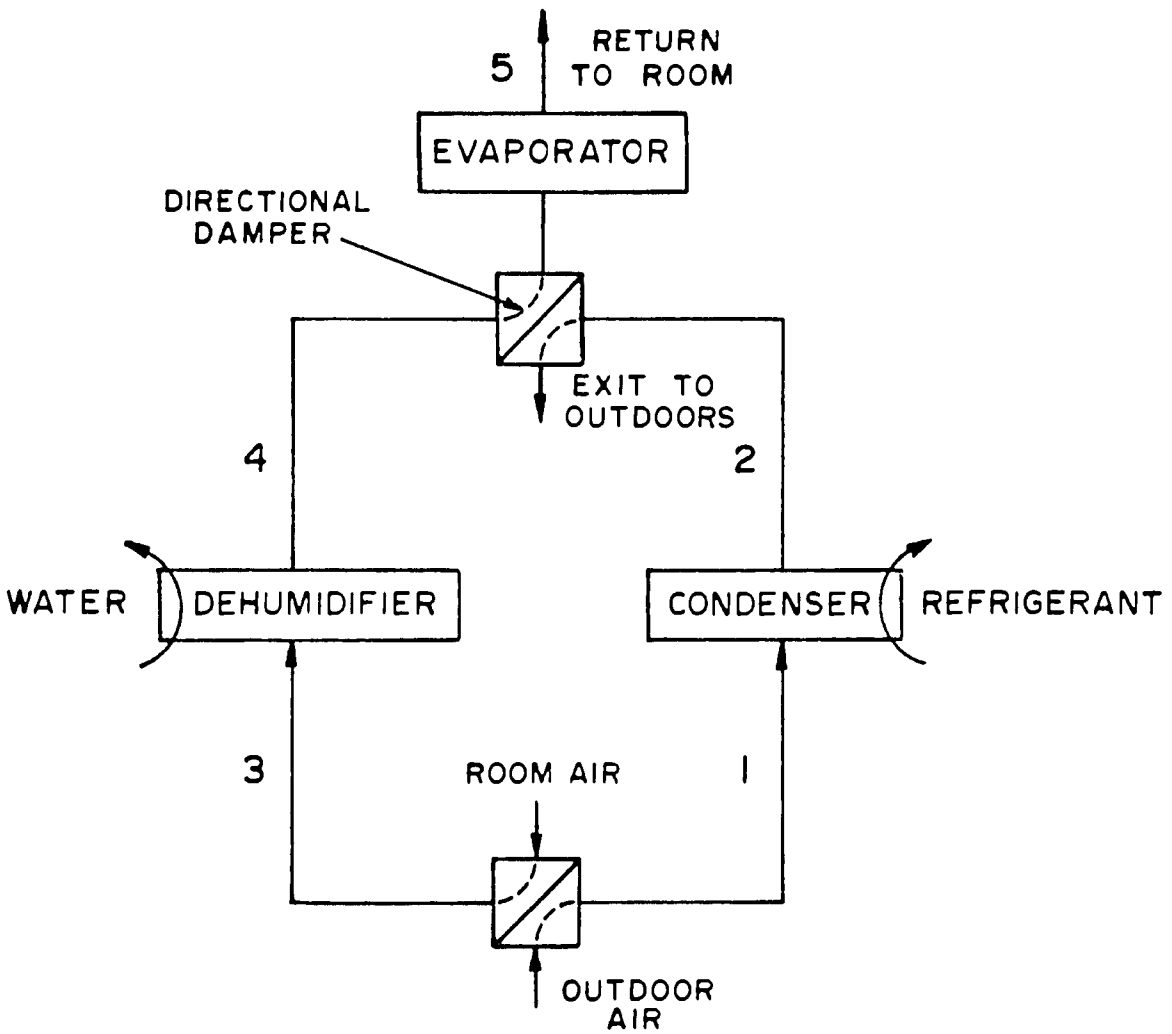
5
RETURN
TO ROOM
EVAPORATOR
DIRECTIONAL
DAMPER
EXIT TO
OUTDOORS
4
2
WATER
DEHUMIDIFIER
CONDENSER
REFRIGERANT
3
ROOM AIR
1
OUTDOOR
AIR

Figure 1.

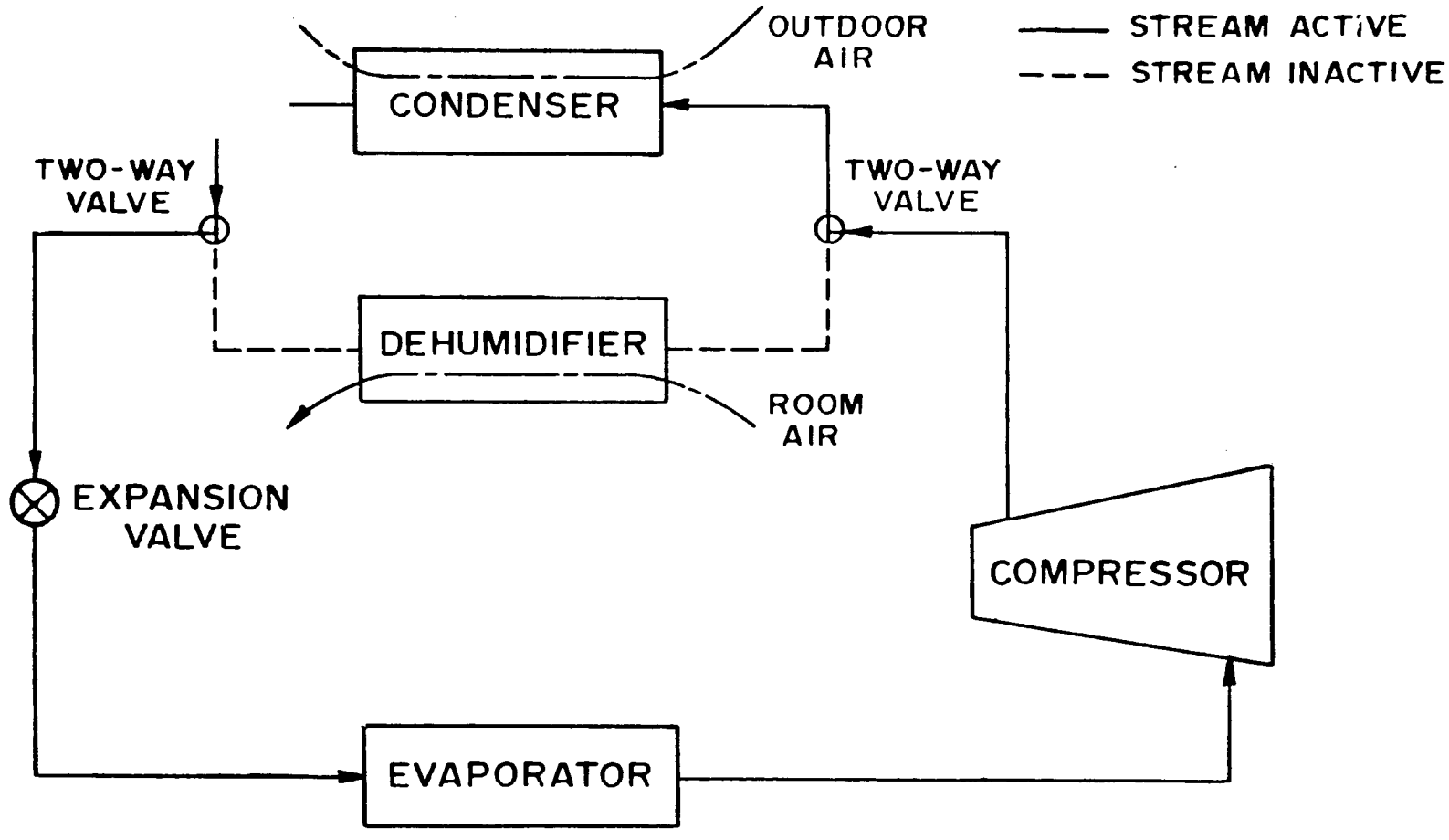
OUTDOOR AIR
STREAM ACTIVE
STREAM INACTIVE
CONDENSER
TWO-WAY VALVE
TWO-WAY VALVE
DEHUMIDIFIER
ROOM AIR
EXPANSION VALVE
COMPRESSOR
EVAPORATOR

Figure 2.

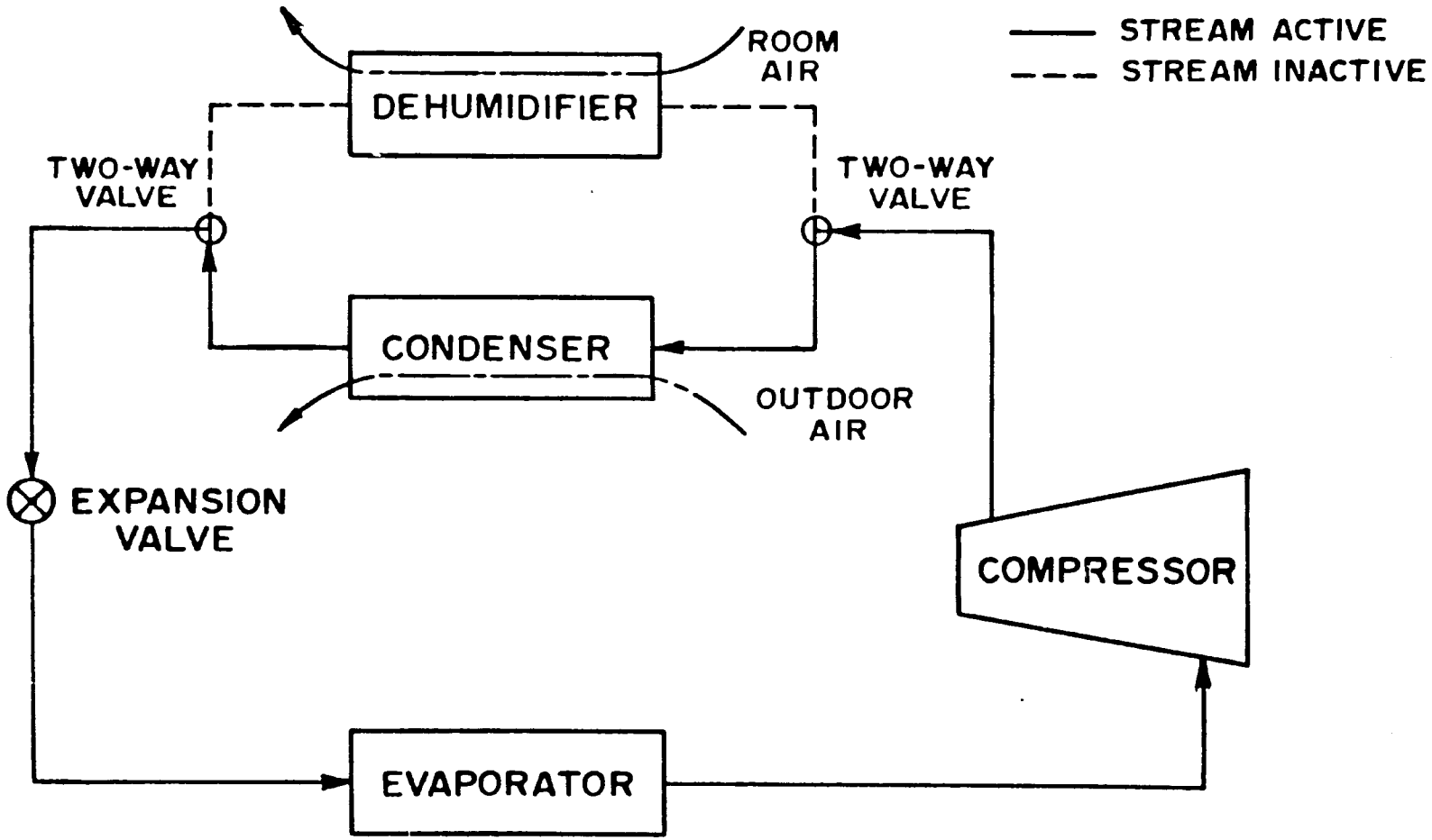
STREAM ACTIVE
STREAM INACTIVE
ROOM AIR
DEHUMIDIFIER
TWO-WAY VALVE
TWO-WAY VALVE
CONDENSER
OUTDOOR AIR
EXPANSION VALVE
COMPRESSOR
EVAPORATOR

Figure 3.

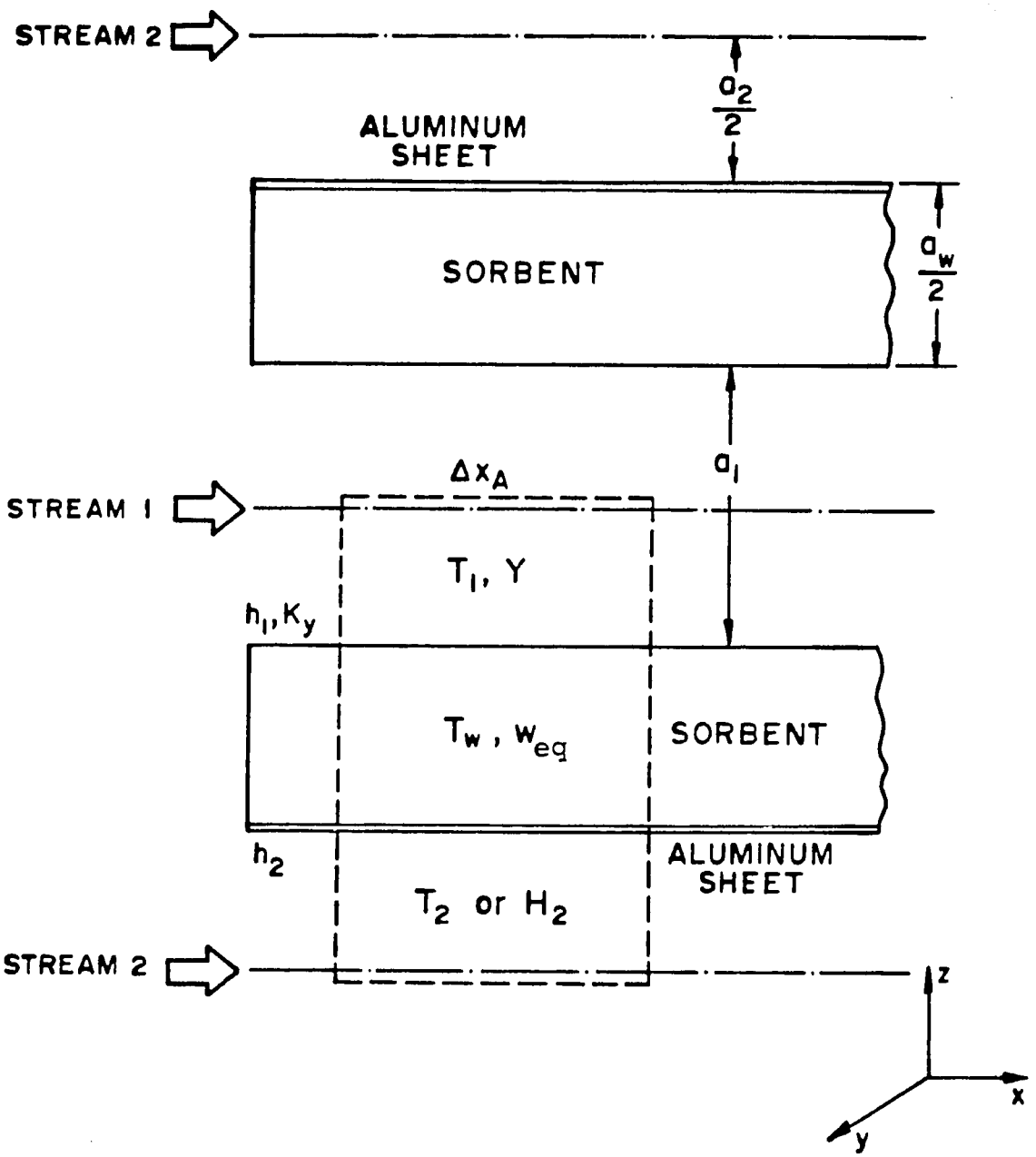
STREAM 2
$\frac{a_2}{2}$
ALUMINUM SHEET
SORBENT
$\frac{a_w}{2}$
a_1
Δx_A
STREAM 1
T_1, Y
h_1, K_y
T_w, w_{eq}
SORBENT
h_2
ALUMINUM SHEET
T_2 or H_2
STREAM 2
z
x
y

Figure 4.

94

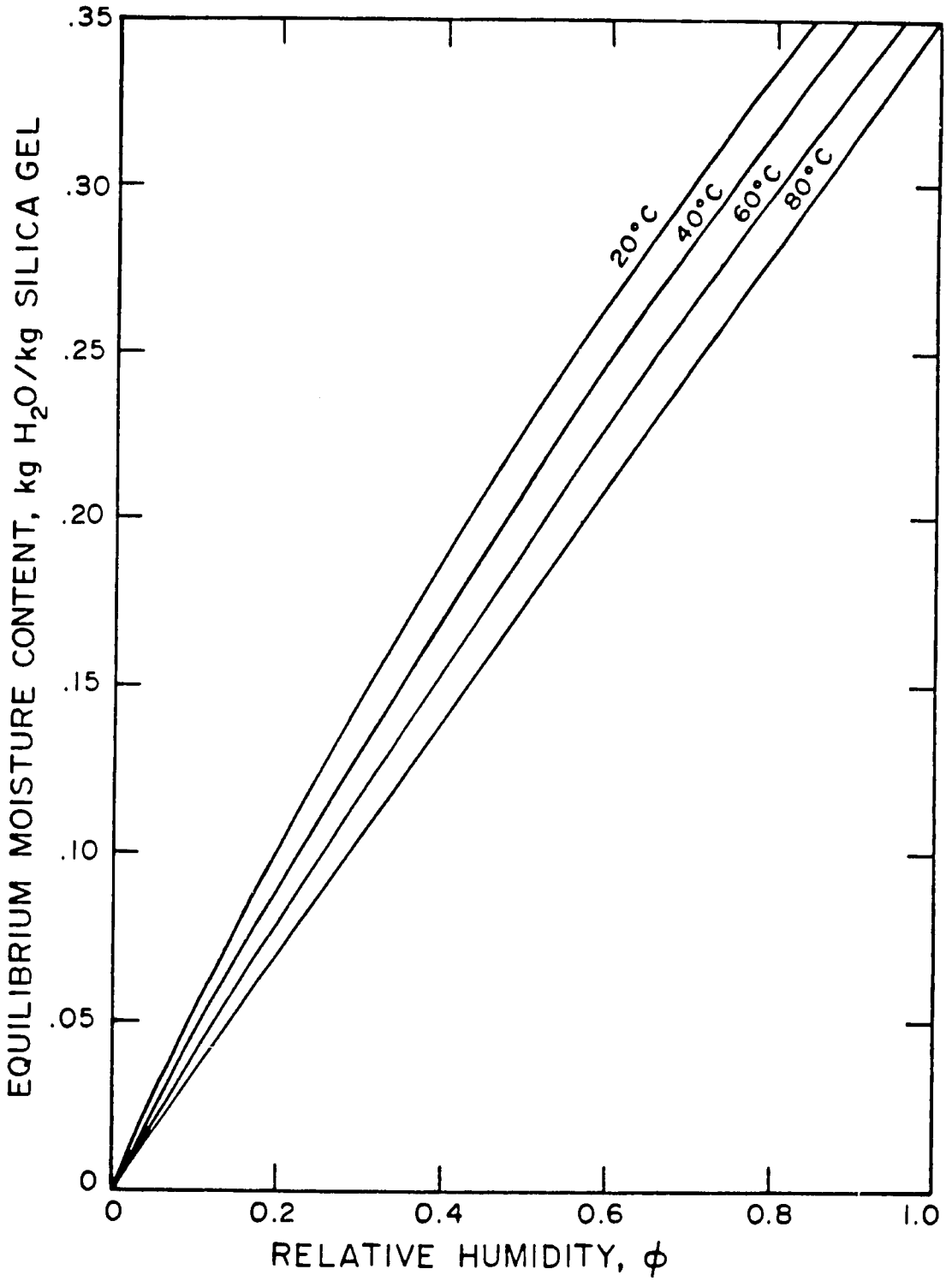
EQUILIBRIUM MOISTURE CONTENT, kg H_2O/kg SILICA GEL
.35
.30
.25
.20
.15
.10
.05
0
0
0.2
0.4
0.6
0.8
1.0
RELATIVE HUMIDITY, ϕ
20°C
40°C
60°C
80°C

Figure 5.

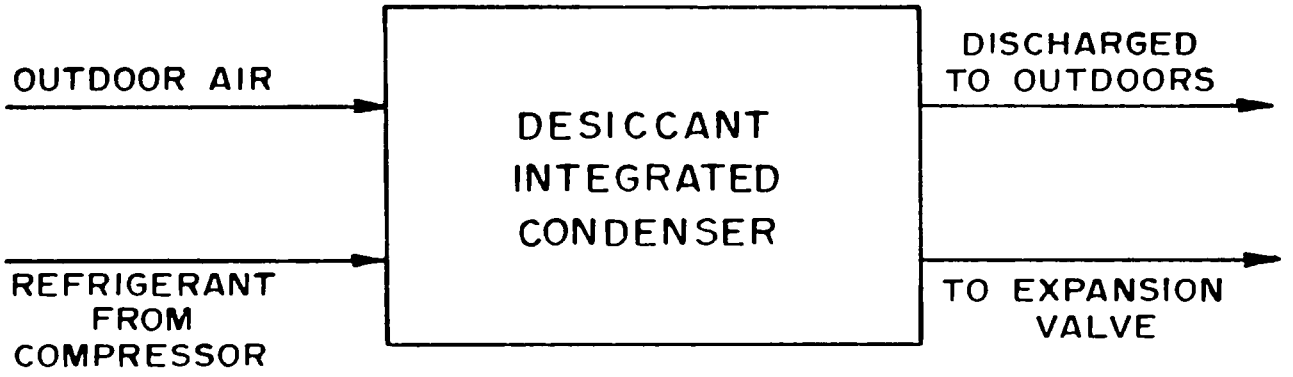
OUTDOOR AIR
REFRIGERANT FROM COMPRESSOR
DESICCANT INTEGRATED CONDENSER
DISCHARGED TO OUTDOORS
TO EXPANSION VALVE

Figure 6.

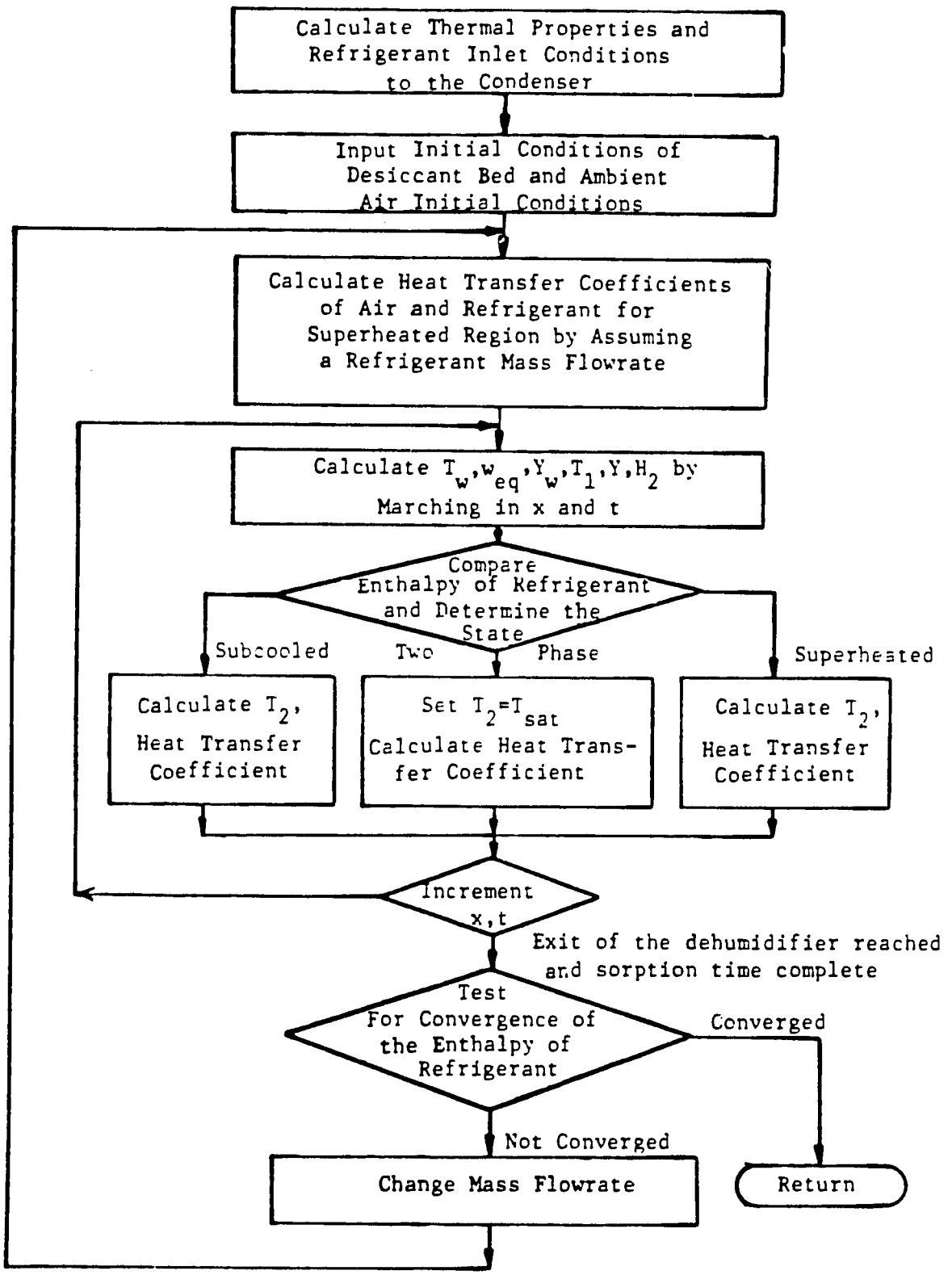
Calculate Thermal Properties and Refrigerant Inlet Conditions to the Condenser
Input Initial Conditions of Desiccant Bed and Ambient Air Initial Conditions
Calculate Heat Transfer Coefficients of Air and Refrigerant for Superheated Region by Assuming a Refrigerant Mass Flowrate
Calculate $T_w, w_{eq}, Y_w, T_1, Y, H_2$ by Marching in x and t
Compare Enthalpy of Refrigerant and Determine the State
Subcooled
Two Phase
Superheated
Calculate T_2, Heat Transfer Coefficient
Set $T_2 = T_{sat}$ Calculate Heat Transfer Coefficient
Calculate T_2, Heat Transfer Coefficient
Increment x,t
Exit of the dehumidifier reached and sorption time complete
Test For Convergence of the Enthalpy of Refrigerant
Converged
Not Converged
Change Mass Flowrate
Return

Figure 7.

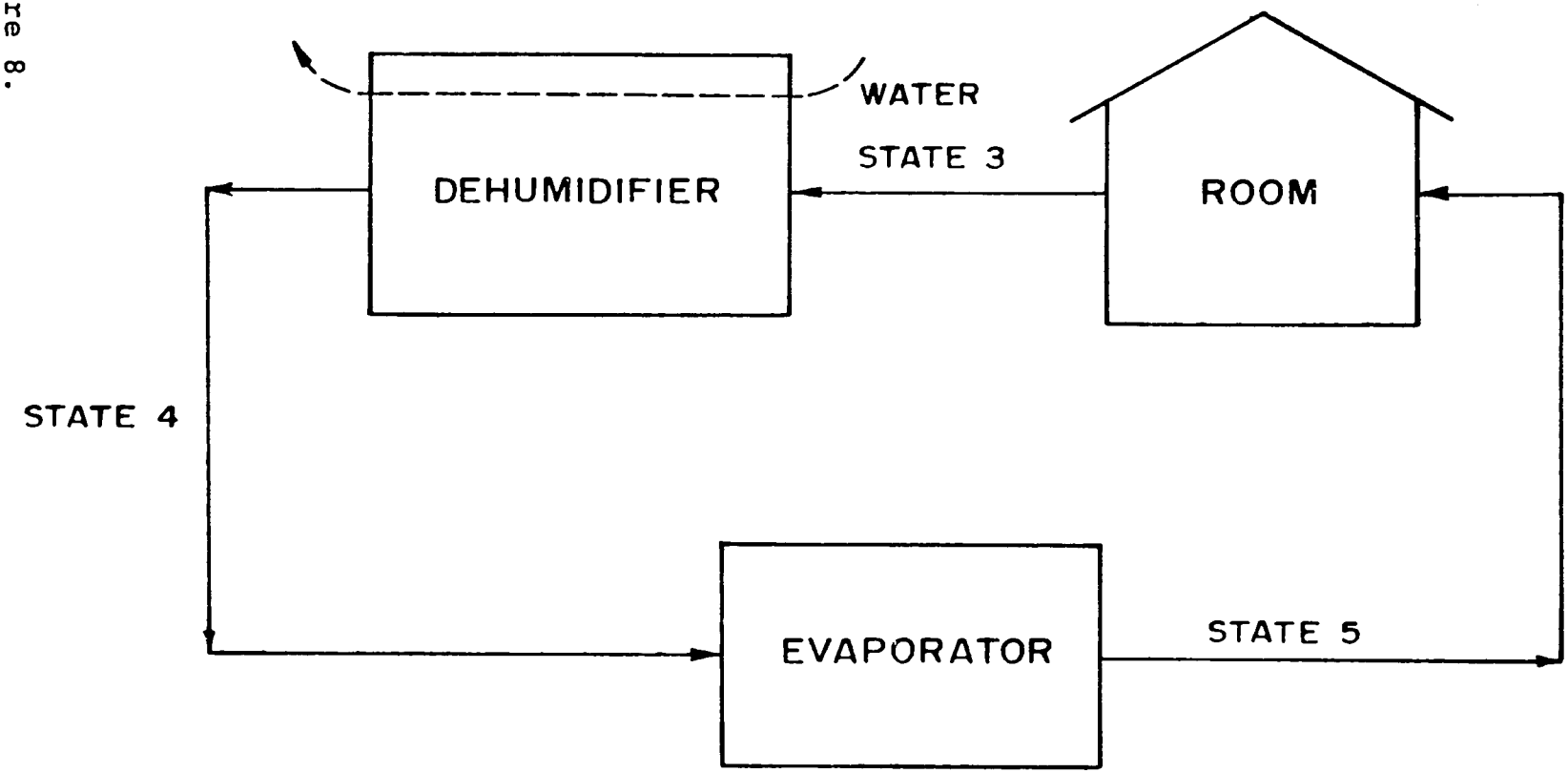

Figure 8.

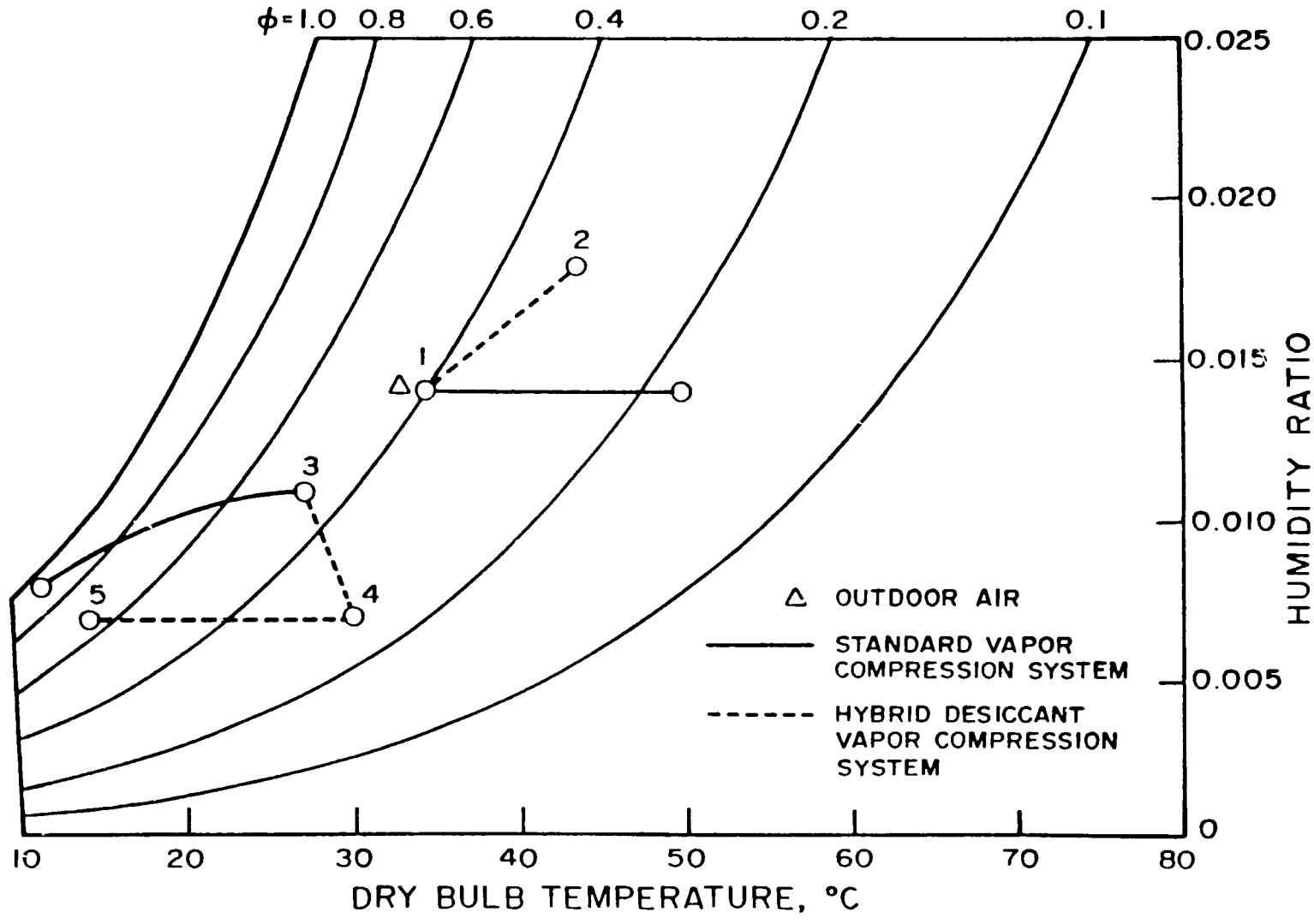
φ=1.0
0.8
0.6
0.4
0.2
0.1
0.025
0.020
0.015
0.010
0.005
0
HUMIDITY RATIO
1
2
3
4
5
OUTDOOR AIR
STANDARD VAPOR COMPRESSION SYSTEM
HYBRID DESICCANT VAPOR COMPRESSION SYSTEM
10
20
30
40
50
60
70
80
DRY BULB TEMPERATURE, °C

Figure 9.

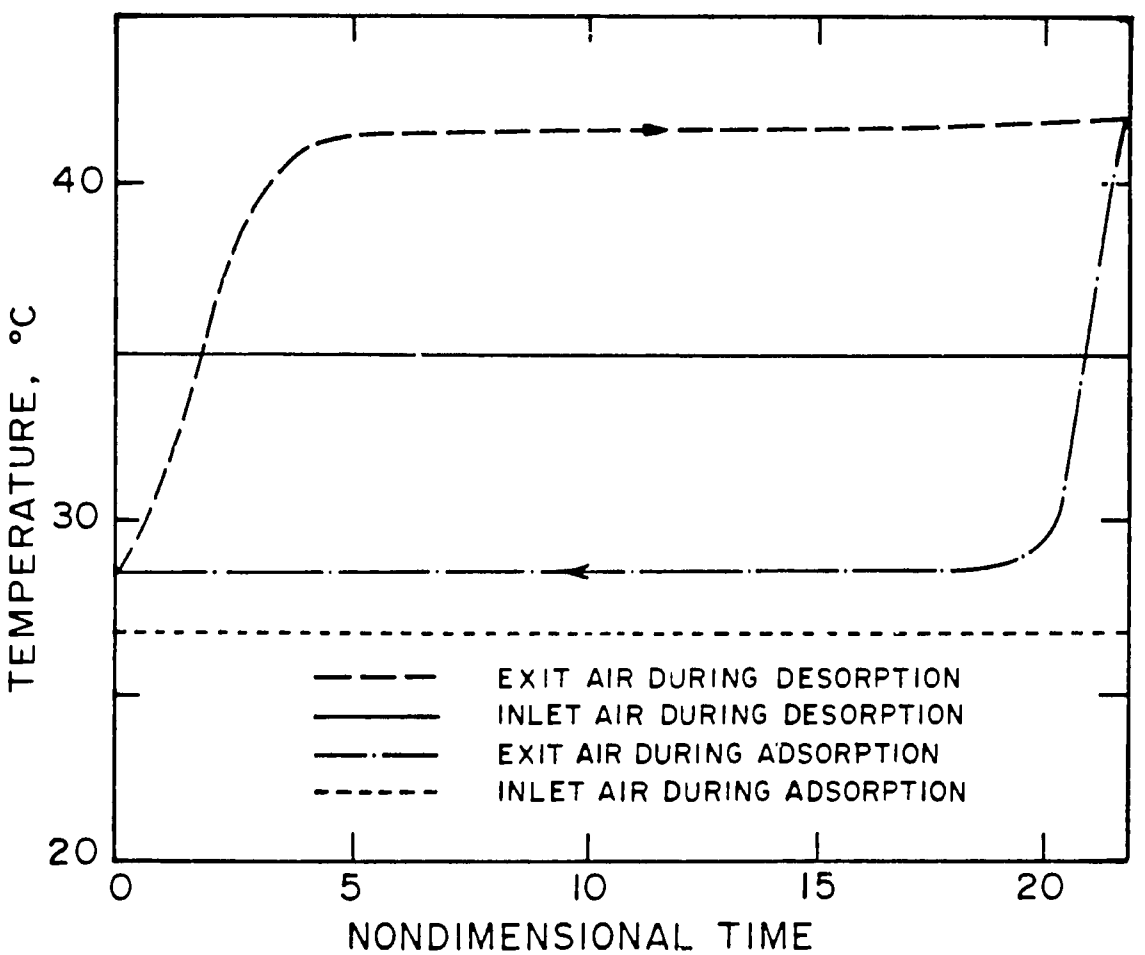
TEMPERATURE, °C
40
30
20
0
5
10
15
20
NONDIMENSIONAL TIME
EXIT AIR DURING DESORPTION
INLET AIR DURING DESORPTION
EXIT AIR DURING ADSORPTION
INLET AIR DURING ADSORPTION

Figure 10.

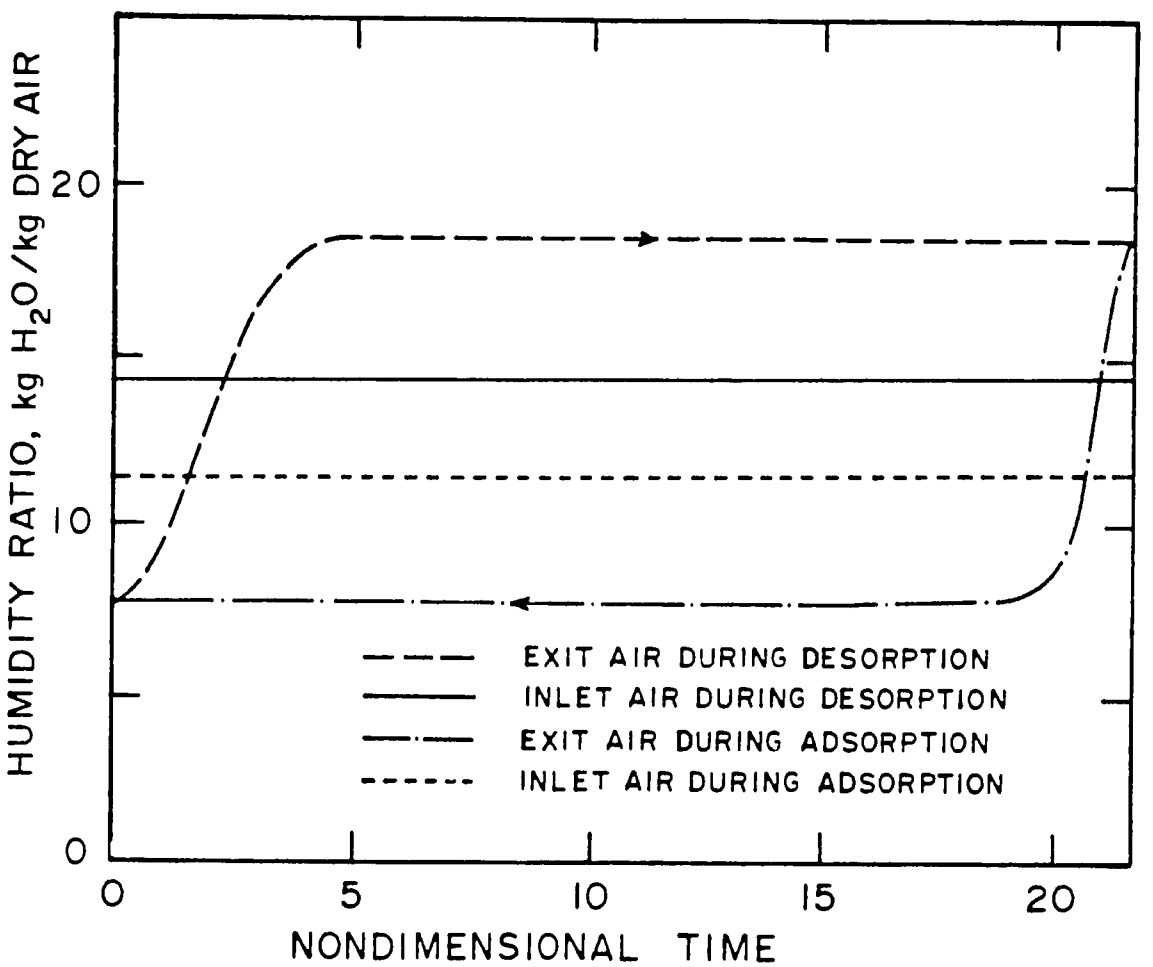
HUMIDITY RATIO, kg H_2O/kg DRY AIR
20
10
0
0
5
10
15
20
NONDIMENSIONAL TIME
EXIT AIR DURING DESORPTION
INLET AIR DURING DESORPTION
EXIT AIR DURING ADSORPTION
INLET AIR DURING ADSORPTION

Figure 11.

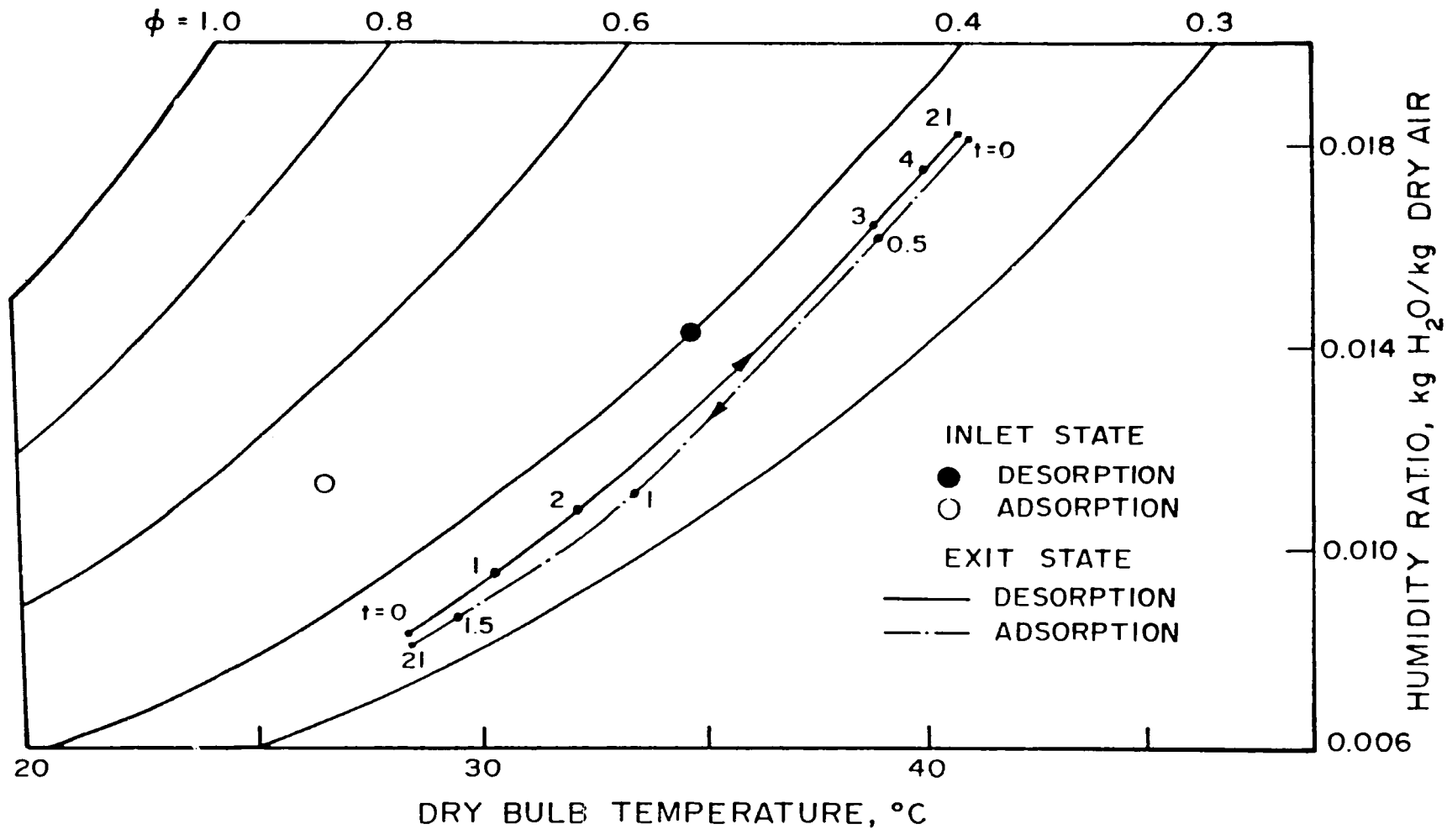
φ = 1.0
0.8
0.6
0.4
0.3
21
4
t=0
3
0.5
2
1
1
t=0
1.5
21
INLET STATE
DESORPTION
ADSORPTION
EXIT STATE
DESORPTION
ADSORPTION
0.018
0.014
0.010
0.006
HUMIDITY RATIO, kg H2O/kg DRY AIR
20
30
40
DRY BULB TEMPERATURE, °C

Figure 12.

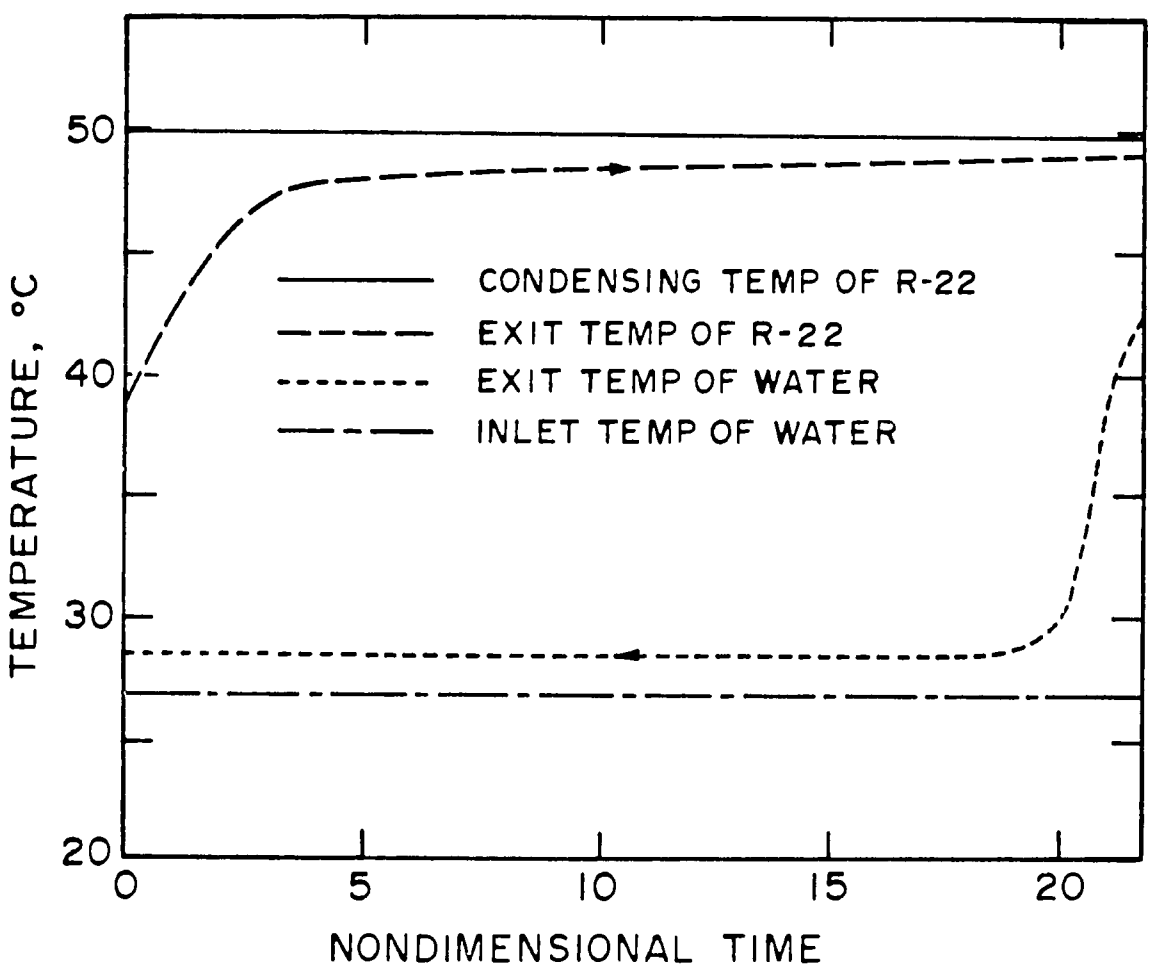
50
40
30
20
TEMPERATURE, °C
0
5
10
15
20
NONDIMENSIONAL TIME
CONDENSING TEMP OF R-22
EXIT TEMP OF R-22
EXIT TEMP OF WATER
INLET TEMP OF WATER

Figure 13.

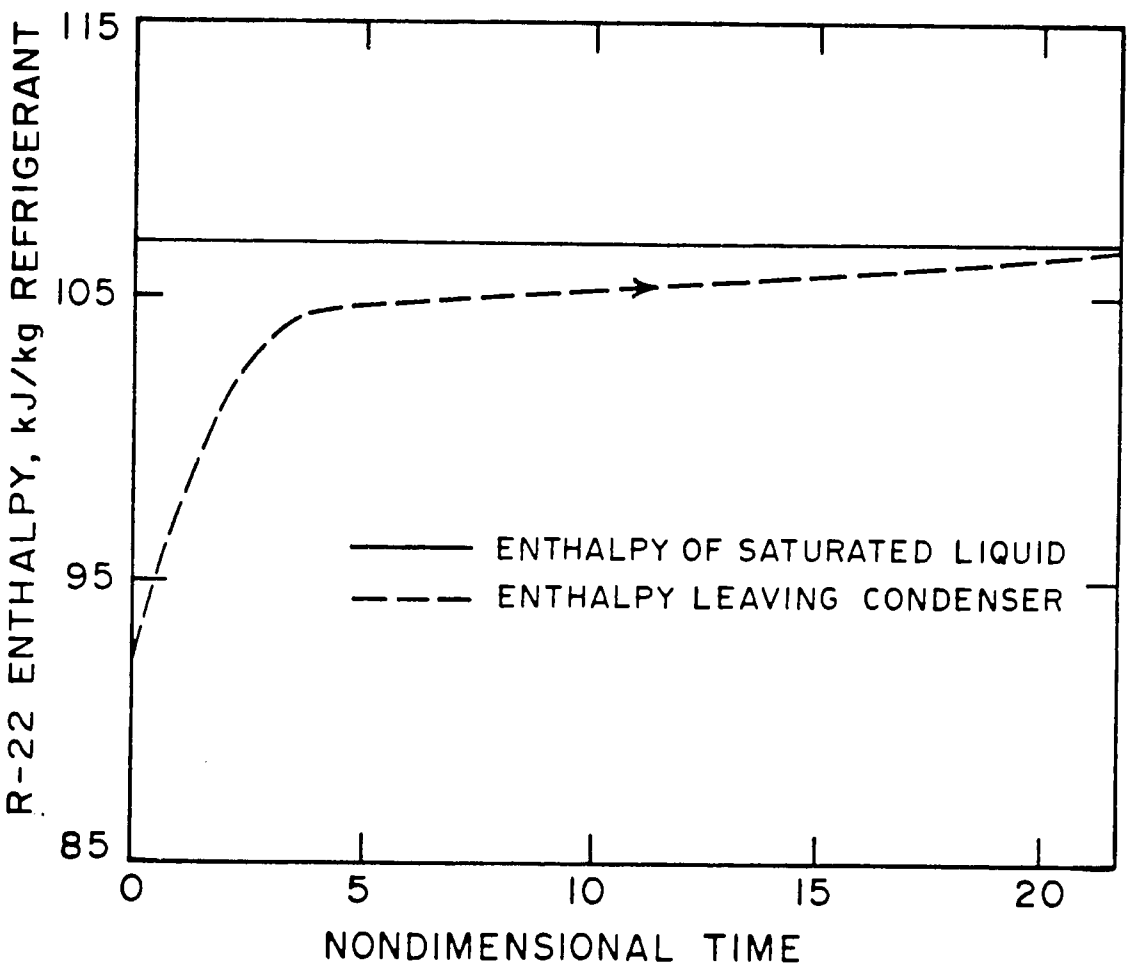
115
105
95
85
R-22 ENTHALPY, kJ/kg REFRIGERANT
0
5
10
15
20
NONDIMENSIONAL TIME
ENTHALPY OF SATURATED LIQUID
ENTHALPY LEAVING CONDENSER

Figure 14.