9365724 PD-AAW-179

PREFEASIBILITY STUDY OF COAL USE IN COSTA RICA

ISN-51799

Report on Task 1
Coal-Fired Power Plant

Prepared for

USAID/Washington
Contract No. LAC-5724-C-005126-000

and

Refinadora Costarricense de Petroleo (RECOPE)
Government of the Republic of Costa Rica

by

Bechtel National, Inc.
San Francisco, California, USA

June 1987

Table of Contents

	Page
SECTION 1 - SUMMARY	
1.0 Introduction	1-1
1.1 Executive Summary	1-2
1.1.1 Coal Availability	1-2
1.1.2 Coal-Fired Power Plant and Performance	1-2
1.1.3 Capital and Operating Costs	1-4
1.1.4 Environmental Considerations	1-5
1.2 Conclusions and Recommendations	1-6
SECTION 2 - POWER PLANT DESCRIPTION	
2.0 Introduction and Background	2-1
2.1 Mineable Coal Reserve and Power Plant Size	2-2
2.2 Electrical Power Generation and Supply System of Costa Rica	2-3
2.3 Plant Cycle and Major Systems	2-3
2.3.1 Thermal Cycle	2-3
2.3.2 Throttle Conditions Selected	2-4
2.3.3 Steam Cycle Description	2-4
2.3.4 Boiler	2-5
2.3.5 Boiler Air and Gas Side Description	2-6
2.3.6 Fuel Handling	2-6
2.3.7 Plant Cooling	2-7
2.3.8 Solid Waste and Liquid Waste Handling	2-8
2.3.9 Plant Electrical and Control Systems	2-10
2.3.9.1 Inplant Systems	2-10
2.3.9.2 Transmission Line	2-10
2.3.9.3 Plant Control System	2-11

	Page
2.4 Predicted Plant Performance	2-11
2.5 Plant General Arrangement Drawings	2-11
ECTION 3 - COSTS AND SCHEDULE	
3.0 Introduction	3-1
3.1 Estimating Approach	3-1
3.2 Capital Cost Estimates	3-2
3.3 First Year Operating and Maintenance (O&M) Costs	3-4
3.3.1 Fixed O&M Costs	3-5
3.3.2 Variable O&M Costs	3-5
3.4 First Year Total Cost of Electricity	3-7
3.5 Project Schedule	3-10
3.6 Cash Flow	3-11
ECTION 4 - ENVIRONMENTAL CONSIDERATIONS	
.0 Introduction	4-1
4.1 Gaseous Emissions	4-2
4.1.1 Sulfur Dioxide	4-3
4.1.2 Nitrogen Oxides	4-4
4.2 Dust and Particulates	4-6
4.2.1 Mining Operations	4-7
4.2.2 Power Plant Operations	4-7
4.2.2.1 Occupational	4-7
4.2.2.2 General Public	4-8

	Page
4.3 Liquid and Solid Waste	4-9
4.3.1 Underground Coal Mining	4-9
4.3.1.1 Liquid Effluents	4-9
4.3.1.2 Disposal	4-11
4.3.1.3 Solid Wastes	4-11
4.3.2 Power Plants	4-11
4.3.2.1 Disposal	4-12
4.4 Trace Elements in Coal	4-12
4.5 Noise	4-12
4.6 Secondary Environmental Impacts	4-13

TABLI

1-1 Plant Performance Summary	1-3
1-2 Capital and Operating Cost Summary	1-4
2-1 Estimated Coal Consumption	2-2
2-2 Design Coal Analysis	2-5
2-3 Summary of Performance	2-12
3-1 Capital Cost Estimate	3-3
3-2 First Year Operation and Maintenance Cost	3-6
3-3 First Year Cost of Electricity	3-8
4-1 Sulfur Emission Guidelines	4-4

		Page
4-2	Sulfur Dioxide Emission Regulations or Guidelines Applicable to Industrial Boilers	4-5
4-3	TLV for Dusts	4-7
4-4	Particulate Emission Regulations or Guidelines Applicable to Industrial Boilers	4-10
4-5	Effluent Limitations for Acid Mine Drainage	4-11

FIGURES

3-1	Typical 1 x 50 MW Coal-Fired Unit-Project Schedule	3-12
3-2	Estimated Cash Flow for Typical 1 x 50 MW Coal-Fired Unit	3-13

DRAWINGS

1. Location Map - SK-C-01

2. Typical Site Plan - SK-C-02

3. Heat Balance Diagram - SK-M-(

4. Air and Gas Flow Diagram - SK-M-02

5. Coal Receiving, Storage and Reclaim Flow Diagram - SK-M-03

6. Turbine-Generator and Boiler-Ground Floor Plan - SK-M-04

7. Turbine-Generator and Boiler-Operating Floor Plan - SK-M-05

8. Power Plant Cross Section - SK-M-06

9. Electrical Single Line Diagram - SK-E-01

APPENDICES

A. List of Tasks

B. Design Bases and Assumptions

C. List of Major Equipment

D. Combustion Calculation

E. Heat Balance Calculation

SECTION 1

SUMMARY

.0 Introduction

Costa Rica is heavily dependent on imports of oil and refined products to meet its energy needs with associated drain on foreign exchange earnings. To deal with this situation, the Government of Costa Rica has initiated a number of programs to use indigenous energy sources wherever possible to meet current and future energy needs.

In 1983, the Government of Costa Rica formulated a program for coal exploration in cooperation with the Government of the United States through United States Agency for International Development (USAID) and U.S. Geological Survey (USGS). The Phase I of this program included drilling of holes, geophysical logging, collecting core and cutting samples, coal analysis and continued surface mapping.

Based on the results of the work performed during Phase I, RECOPE, the petroleum refining company of Costa Rica, prepared a geologic report on Baja Talamanca area coal deposits. RECOPE also received a mining feasibility study report prepared by Dravo International Inc. of New Jersey.

The main objectives of this Bechtel study are:

a. To provide comments and/or recommendations to RECOPE after reviewing RECOPE's Phase I Geological Report, Dravo's Mining Feasibility Study Report and RECOPE's current plans for future geological investigations of this project area.

b. To provide preliminary conceptual design and cost estimates for a coal fired power plant to be located in this project area and to determine the technical feasibility of using coal in Costa Rica's existing cement plants and thermal power plants.

These objectives are reflected in the tasks listed in Appendix A. This report describes the work performed on task 1 only. The report provide conceptual design, predicted performance and order of magnitude cost estimates for a base 50 MW coal-fired power plant. Factored cost estimates for coal-fired power plants of other sizes are also included. The work performed on tasks 2 through 6 is covered in other reports.

1.1 Executive Summary

1.1.1 Coal Availability

The Task 2 report indicates that about 6 to 7 million tonnes of mineable coal reserve is available in Uatsi Project Area (see Task 2 report for details). This reserve will be sufficient to support the operation of a 50 MW (gross) capacity coal-fired power plant for 30 years. The plant will consume coal at the rate of about 200,000 tonnes per year. The average coal analysis, design bases and assumptions used for the power plant conceptual design and cost estimating are shown in Appendix B.

1.1.2 Coal-Fired Power Plant and Performance

The 50 MW (gross) capacity power plant is located at the mine mouth as shown in drawing No. SK-C-01. The unit includes the following major equipment or systems:

- One condensing turbine-generator set with auxiliaries located indoors. Throttle steam conditions are 103 kg/sq cm.abs.(1465 psig) and 510°C (950°F). Final feedwater temperature is 225°C (437°F) with five stages of feedwater heating.

- One pulverized coal-fired balanced draft drum type boiler with required auxiliaries located outdoor with a roof for shelter from rain.

- A circulating water system with mechanical draft cooling tower.

- A coal receiving, storage and reclaim system.

- A baghouse for the gas treatment.

- A 91 meter (300 ft) high stack.

- A bottom ash and fly ash handling and storage system.

- A makeup water treatment system

- All electrical, control, maintenance and administrative facilities.

The details of the power plant are discussed in Section 2 of this report.

The performances of the base 50 MW unit and other units with ratings ranging from 10 to 60 MW are summarized in Table 1-1 below.

Table 1-1
PLANT PERFORMANCE SUMMARY

1.	Nominal Plant Rating, MW	10	20	30	40	50	60
2.	Gross Plant Output, MW	10.5	21	31.6	42.1	52.6	63.1
3.	Net Expected Output, MW	9.5	18.9	28.4	37.8	47.3	56.8
4.	Expected Annual Salable KWhr (10^6) production at Plant at 0.7 Capacity Factor	58.3	115.9	174.1	231.8	290.0	348.3
5.	Net Full Load Heat Rate Kcal/KWhr	3399	3269	3150	3038	2931	2931
6.	Net Plant Efficiency	25.3	26.3	27.3	28.3	29.3	29.3
7.	Boiler Heat Input 10^6 Kcal/hr	32	62	89	115	139	166
8.	Full Load Coal Consumption, tonnes/day	187	357	518	666	784	941
9.	Annual Coal Consumption, tonnes	48000	91000	132000	170000	200000	240000

1.1.3 Capital and Operating Costs

The order of magnitude (±25%) capital and operating costs for the plant is presented in Table 1-2 below. Costs for 60, 40, 30, 20, and 10 MW plants are developed by simple factoring of the costs developed for the base 50 MW design. Details of the cost estimates are discussed in Section 3.

Table 1-2

CAPITAL AND OPERATING COST SUMMARY*

1.	Nominal Plant Rating, MW	10	20	30	40	50	60
2.	Estimated Capital Cost in 1987 Dollars (Mission)	25.0	35.0	44.0	52.0	60.2	67.0
3.	Capital Cost, $/Installed KW	2381	1667	1392	1235	1145	1062
4.	Annual Operating and Maintenance Costs, Dollars (Million)	2.3	3.5	4.8	5.8	6.8	7.9
5.	First Year Cost of Electricity at Plant, Mills/KWHr**	92.3	67.2	58.3	52.4	48.6	45.9

*Excludes interest and escalations during construction and other owner's costs. See Section 3 for details.

**Based on a fixed charge rate of 12.14%.

It is assumed that coal from Uatsi area contains low sulfur (less than 1.1%) and therefore flue gas desulfurization is not required to meet the health and environmental requirements of Costa Rica. The low sulfur coal assumption should be confirmed prior to performing further studies on coal use in Costa Rica.

Also the first year cost of electricity is for the mine-mouth power plant and excludes the cost of 138 KV transmission line from Uatsi to Port Limon. Costs of FGD system, circulating

fluidized bed boiler and 138 KV transmission line are discussed in Section 3.

1.1.4 Environmental Considerations

Section 4 addresses the environmental concerns of using coal in greater detail. Costa Rica has no emissions standards or guidelines. Therefore, for this study the environmental guidelines of the World Bank were reviewed for applicability to underground coal mines and mine-mouth power plants. The guidelines provide human exposure limits for the important pollutants expected from such facilities. Emission guidelines are also recommended by the World Bank for some pollutants which include some considerations of human welfare and potential damage to ecological systems. The importance of these considerations is subject to local conditions and policies. Therefore, the emissions guidelines are considered to be sufficiently conservative for the purposes of this study.

A power plant 50 MW or less in size burning low sulfur coal probably can be constructed and operated in an unpolluted area and meet the guidelines of the World Bank without extraordinary pollution control requirements. Specifically, there should be no need for flue gas sulfur removal systems. The major pollution control equipment recommended is a bag house for controlling particulate (dust) emissions from the power plant stack. Nitrogen oxides emissions are controlled by using low NO_x burners provided by the boiler manufacturers as standard equipment.

Liquid and solid wastes probably can be disposed of without undesirable environmental effects.

Certain aspects of the coal mine and power plant construction and operation will need further information to confirm these results. These include: (a) The chemical nature of leachate

from solid waste piles; (b) The presence of heavy metals and other trace elements in the coal; (c) Local meteorology and terrain; (d) The proximity and nature of any sensitive activities to the industrial operations; (d) The population distribution and related demographics in the vicinity of the facility.

The emission limits applicable to the project can be determined with the above information. This is usually accomplished during the design phase of a project.

1.2 Conclusions and Recommendations

1.2.1 The order of magnitude cost estimates included in this report has a range of +25% to -25%. The report includes cost estimates for unit sizes ranging from 10 to 60 MW based on several assumptions. It is recommended that the future studies should be aimed at achieving cost estimates with higher accuracy and should focus on 50 to 60 MW coal-fired plant with specific plant site(s) and site design data.

1.2.2 Both the dollars per installed kilowatt and the cost of electricity decrease with the increasing size of the power plant. The cost of electricity also decreases with increasing plant capacity factor. It is recommended that system evaluation studies should be made to determine the use of 50 or 60 MW unit as a base loaded plant with 70 or higher percent, plant capacity factor in conjunction with the hydro power plants of the Costa Rica Electrical Supply System.

1.2.3 Lower coal costs will decrease the cost of electricity. $1.50 per million Btu of coal is used in this study. Lower coal costs should be achieved by following the various recommendations contained in the Task 2 Report. The plant design parameters should be optimized in future studies based on the coal costs expected over the life of the plant.

1.2.4 This study shows that a 60 kilometer long 138 KV transmission line is required to transport power from the proposed mine-mouth power plant to Port Limon area. This transmission line is expected to cost about 6.0 million dollars. Location of the power plant at Port Limon area will eliminate or substantially reduce this cost. But the delivered cost of Uatsi coal to the power plant at Port Limon will increase due to the added transportation costs. However, this increase in cost will be offset by about 4-5 dollars per tonne of coal if the 138 KV line is eliminated. It is recommended that future studies should consider Port Limon area as an alternative power plant site for utilizing coal from Uatsi mine area.

1.2.5 The results of the prefeasibility study for coal use in Costa Rica show that the major uses for coal are: (a) coal-fired power plant, (b) National Cement Industries (NCI), and (c) Pacific Cement Industries. It is recommended that coal transportation studies should be performed to cover at least the following coal supply scenarios:

a. Coal supply to NCI with mine-mouth power plant

b. Coal supply to NCI and Pacific Cement with mine-mouth power plant

c. Coal supply to power plant at Port Limon

d. Coal supply to power plant at Port Limon and NCI

e. Coal supply to power plant at Port Limon, NCI, and Pacific Cement.

1.2.6 The sulfur content of coal and Costa Rica's environmental pollution control requirements will affect the capital and operating costs of the plant. It is recommended that environmental emission limits and solid and liquid waste discharge limits should be established for the coal-fired plant with appropriate environmental studies.

1.2.7 The following recommendations are made on coal analyses, plant cooling water availability and codes and standards requirements:

a. The coal analyses currently available are preliminary and need improvement as noted in Task 2 Report. The coal quality influences the power plant design, equipment selection, capital costs, operating costs and environmental emissions. It is recommended that additional drilling, sampling and analyses should be performed to collect adequate data on coal quality for use in equipment design.

b. The study assumes that enough water is available in the stream flowing adjacent to the preliminary power plant proposed in the study to supply makeup water to the plant. Flow measurements of this stream should be done, particularly during dry seasons to confirm the availability of adequate water for the plant.

c. A list of codes and standards applicable to Costa Rica's power plant should be prepared. This study has not addressed these requirements. Power plant costs may increase if special codes and standards become applicable.

SECTION 2

POWER PLANT DESCRIPTIC

2.0 Introduction and Background

Costa Rica is heavily dependent on impor
meet its energy needs with associated drain on foreign exchange earnings. To deal with this situation, the Government of Costa Rica has initiated a number of programs to use indigenous energy sources wherever possible to meet current and future energy needs.

It was generally known for a long time that coal existed in Costa Rica in several locations. In 1981, Instituto Costarricense de Electricidad (ICE) implemented a program of geological investigations in collaboration with Japan International Cooperation Agency (JICA). Later, the petroleum refining company of Costa Rica (RECOPE) took the responsibility for coal exploration.

In 1983, the Government of Costa Rica formulated a program for coal exploration in cooperation with the United States Agency for International Development (USAID) and U.S. Geological Survey (USGS). The Phase I of this program included drilling of holes, geophysical logging, collecting core and cutting samples, coal analysis, and continued surface mapping.

Based on the results of this work performed during Phase I, RECOPE prepared a geologic report on Baja Talamanca area coal deposits. RECOPE also contracted Dravo International Inc. of New Jersey to prepare a prefeasibility study for mining coal in the Uatsi project area of Baja Talamanca coal fields. This report was received by RECOPE in January 1985.

Bechtel reviewed these reports as part of Bechtel work under Task 2. A separate report covers Bechtel's comments and recommendations based on this review.

2.1 Mineable Coal Reserve and Power Plant Size

Bechtel's review of the estimates of mineable coal in the Uatsi project area indicates that about 6 to 7 million tonnes of coal car be mined by labor-intensive underground mining method. A 50 MW (gross) capacity coal-fired thermal power plant will consume about million tonnes of coal at about 70 percent plant capacity factor in 30 years, which is the expected economic life for a coal-fired powe plant. This requires about 200,000 tonnes/year coal production. Table 2-1 gives the coal production rates required for other plant sizes.

Table 2-1

ESTIMATED COAL CONSUMPTION

Plant Size MW (Gross)	Tonnes per year
10	48,000 - 52,000
20	91,000 - 97,000
30	132,000 - 140,000
40	170,000 - 180,000
50	200,000 - 215,000
60	240,000 - 255,000

The following sections of this report describe a baseline coal- fired power plant consisting of one 50 MW capacity unit which will consume about 200,000 tonnes of coal per year at 70 percent plant capacity factor. If other facilities such as cement plants receive coal from the same mine, then the power plant capacity will be lower depending upon the amount of coal available for the power plant. If future mine studies indicate that more coal can be mined at this mine, then a larger capacity coal-fired plant with more than one unit should be considered at this site. Addition of large capacity units to the Costa Rican electric system may require studies on system stability.

2.2 Electrical Power Generation and Supply System of Costa Rica

Currently, Costa Rica has an installed generating capacity of about 775 MW including the generating capacity of the existing thermal units. The thermal units are used for emergency purpose only. Almost all of the power generation is by hydro power plants. The current peak system demand is about 523 MW. The load factor is about 68%. The largest size unit in the system is rated at 56 MW.

System studies are required to evaluate the feasibility of accepting units larger than the existing ones. It is suggested that separate studies should be made for such evaluations. ICE had indicated to Bechtel that a 50 to 60 MW unit can be utilized in their system as a base loaded unit with high capacity factor. It is assumed by Bechtel that ICE can operate this coal-fired unit at about 70% plant capacity factor. This should be verified with ICE by RECOPE. Operation of this unit at lower than 70% capacity factor will increase the cost of electricity generation.

The design bases and assumptions used for the conceptual design of the coal-fired plant are listed in Appendix B. A list of major equipment with design ratings are included in Appendix C. The general description of the plant thermal cycle, performance and plant arrangement are discussed below.

2.3 Plant Cycle and Major Systems

2.3.1 Thermal Cycle

The plant design is based on conventional rankine cycle which has been proven successful over many years of operation. The turbine cycle is based on using a non-reheat condensing steam turbine rated at 52.6 MW (gross) with throttle conditions of 103 kg/sq cm Abs (1465 psia) and 510°C (950°F). The design turbine back pressure is 89 mm HgA (3.5 inches HgA). The turbine throttle flow is 207,700 kg/hr (458,000 lb/hr) at the design point. The turbine has five uncontrolled

extractions for feedwater heating; this heats the feedwater to 225°C (437°F) final feedwater temperature. A heat balance cycle diagram is included as Drawing SK-M-01. Appendix E shows details of the heat balance.

2.3.2 Throttle Conditions Selected

Steam turbine throttle conditions of 103 kg/sq cm Abs (1465 psia) and 510°C (950°F) have been selected for this plant. Experience shows that these throttle conditions are likely to be the optimum for the cycle considered and the expected fuel costs. Although use of a higher throttle steam temperature of 538°C (1000°F) would improve cycle efficiency, the resulting operating cost savings are likely to be offset by the increased capital costs for the higher grade materials required for the turbine and the boiler.

2.3.3 Steam Cycle Description

Combustion of coal in the boiler generates heat which converts boiler feedwater to superheated steam. This superheated steam is transported to the steam turbine through the main steam piping (see drawing SK-M-01). Steam is then expanded through the steam turbine, producing power. Steam is extracted from the turbine at five points for feedwater heating. The steam turbine exhausts the balance of the steam to the condenser where it is condensed to liquid as heat is removed from the steam by the circulating water flowing through the condenser tubes. The condensate from the condenser is pumped by the condensate pumps to the deaerator through the gland steam condenser and two low pressure feedwater heaters. The low pressure feedwater heaters are shell and tube heat exchangers which heat the condensate using steam extracted from the steam turbine. The deaerator is of open type and uses extraction steam to heat the condensate and to remove any noncondensible gases from the water. The water leaving the deaerator is then pumped by the feedwater pumps to the boiler through two high

pressure feedwater heaters. Like the low pressure feedwater heaters, the high pressure heaters use steam extracted from the steam turbine to heat the feedwater. Feedwater heating improves cycle efficiency.

2.3.4 Boiler

The boiler is pulverized coal fired, balanced draft, drum type unit with no reheat which produces 207,700 kg/hr (458,000 lb/hr) of superheated steam at 105.5 kg/sq cm Abs (1500 psia) and 511.1°C (952°F). The boiler is designed to burn coal represented by the coal analysis shown in Table 2-2 below.

Table 2-2

DESIGN COAL ANALYSIS

Proximate Analysis

Component	Weight %
Moisture	26.85
Ash	12.53
Volatile Matter	27.83
Fixed Carbon	32.79
Total	100.00

Ultimate Analysis

Component	Weight %
Carbon	31.90
Hydrogen	3.23
Sulfur	0.64
Oxygen	27.66
Nitrogen	0.51
Ash	9.21
Moisture	26.85
Total	100.00

HHV, Kcal/kg (Btu/lb) = 4254 (7657)

The boiler is provided with three pulverizers each with 50% capacity. With one pulverizer on maintenance, the remaining two will operate to provide 100% capacity. Auxiliary fuel for the boiler is No. 2 fuel oil.

Also included with the boiler are economizer and superheater sections, an air preheater, primary air fans and forced draft fans. The boiler is located outdoors with a simple roof for protection from the rain.

2.3.5 Boiler Air and Gas Side Description

Drawing SK-M-02 shows the boiler air and gas flow arrangement.

Combustion air and pulverized coal are provided to the boiler. After the coal is burned and heat is removed from the combustion gas to generate steam, the boiler flue gases enter the baghouse where particulates are removed. The cleaned flue gas then flows through an induced draft fans and out the stack. Appendix D shows details of air and gases.

Since the coal has a relatively low sulfur content, no flue gas desulfurization system is provided. However, if the future investigations show higher sulfur content of coal, then the following alternatives should be considered to limit Sulfur Dioxide emissons:.

a. Use of Fluidized Bed Boilers

b. Use of Flue Gas Desulfurization System.

These alternatives will increase the cost of power generation significantly. Costs are discussed in Section 3.

2.3.6 Fuel Handling

The coal handling system is shown in Drawing SK-M-03.

Coal from the mine is transported via a belt conveyor to two live storage silos with total storage capacity of 3 days coal supply to the plant. It is then transported via a belt conveyor to the crusher house, where the coal is crushed by two jaw type crushers. Coal is then transported by reclaim conveyors to a surge bin, where cascade conveyors distribute the coal to three inplant coal silos. The inplant silos are sized to provide a total of 8 hours of storage. From the silos, the coal falls to gravimetric feeders, which regulate

the fuel input to the boiler. From the feeders, the coal falls to three bowl mill pulverizers which grind the coal to its final size.

An emergency reclaim hopper and conveyor is also provided to transport coal from the emergency coal pile to the crusher house in the event that coal cannot be supplied from live storage. A dead coal storage of 15 days supply is maintained at the plant to allow for mine maintenance and outages.

2.3.7 Plant Cooling

The plant cooling water systems satisfy all of the plant equipment cooling requirements. These systems include the circulating water, service water, and auxiliary cooling water systems.

The circulating water system is a closed-loop system consisting of a mechanical-draft cooling tower, circulating water pumps, and condenser.

The cooling tower is a single-structure, multiple-cell, wet induced draft type. Heated water from the condenser and the service water system is cooled by the cooling tower and falls into the cooling tower basin. Circulating water pumps located in the cooling tower basin pump the water through the condenser and back to the cooling tower. Two 100% capacity circulating water pumps are provided to maintain the unit in service during the loss of one of the pumps. Circulating water lost through cooling tower evaporation and system blowdown is replaced with makeup water either from the stream or from the well water pumps.

The service water system provides cooling water for the turbine and generator heat exchangers, the auxiliary cooling water heat exchangers, and the condenser vacuum pump coolers. The two 100% capacity service water pumps take suction from

the circulating water pumphouse. All heat exchangers in this system are designed for complete redundancy, one operating and one spare.

The auxiliary cooling water system is a closed-loop system which provides equipment cooling for all plant heat exchangers other than those served by the service water system. Typical items are oil coolers, fan bearings, etc. The system circulates corrosion-inhibited condensate quality water through two full-capacity shell-and-tube heat exchangers.

Service water is circulated through the tube side of the exchanger and the auxiliary cooling water circulates through the shell side. Two 100% capacity pumps circulate the auxiliary cooling water through the exchanger and the various equipment exchangers.

2.3.8 Solid Waste and Liquid Waste Handling

Solid wastes are collected by the bottom ash handling system and the fly ash handling system.

The bottom ash handling system removes ash generated in the boiler furnace. Furnace ash and slag fall to the submerged scraper conveyor (SSC). The falling ash is quenched by the water contained in the trough of the SSC and settles at the bottom of the trough.

Economizer ash falls by gravity from the economizer hoppers to a set of mechanical drag chain conveyors which in turn feed SSC.

Mill rejects are transferred to the SSC using venturi-type pumps under each mill storage hopper.

Ash from the SSC is removed by steel scraper conveyor to a transfer belt conveyor which in turn deposits ash on to a main

collecting belt conveyor. The main belt conveyor feeds ash to a three sided concrete storage bin, located on grade, for intermediate storage. From here the bottom ash is hauled to the mine for disposal.

The fly ash handling system collects fly ash removed from the flue gas by the bag house.

Flue gas from the boiler flows to a pulse jet type bag house where particulates are removed from the flue gas. Fly ash from the bag house hoppers is conveyed using a vacuum conveyor system to a cyclone type separator which removes the majority of the ash from the air stream and collects it in a silo with 72 hour storage capacity. Any ash remaining in the air stream is removed by a bag filter prior to entering the exhausters. There are two 100% capacity positive displacement mechanical exhausters. Two 100% capacity unloaders are used to remove ash from the silo. These unloaders condition the ash with water to minimize dust when unloading the ash into trucks for disposal at the mine.

The main liquid wastes from the plant are coal and ash handling area runoff, makeup demineralizer regeneration wastes, and cooling tower blowdown.

Coal and ash handling area wastes will be collected and routed to a pond for settling and neutralization.

Makeup demineralizer regeneration wastes will be routed to a neutralization sump for pH control.

Cooling tower blowdown requires no treatment since circulating water pH is maintained between 6 and 9 during normal system operation.

The above liquid wastes, after any required settling and neutralization as described above, can be discharged to the

nearby stream, used as required in the plant, or transported back to the mine for disposal. Final disposition of waste streams will be determined during the detail design phase of the project.

2.3.9 Plant Electrical and Control Systems

The plant electrical and control systems consist of inplant electrical systems, the transmission line, and the plant control system.

2.3.9.1 Inplant Systems

A single line diagram for the plant is shown in drawing SK-E-01. The steam turbine-generator generates power at 13.8 kV, 3 phase, 60 hertz. A unit auxiliary transformer serves the AC auxiliary power system, which supplies 4160 V power to operate large plant auxiliaries (motors 250 HP and above), and also supplies power to several 480 V load centers which serve the remaining station auxiliary loads.

The DC auxiliary power system consists of a storage battery, battery chargers and switchgear. This system willl supply emergency lighting, controls, and vital instrumentaion loads for limited periods. A static inverter supplied from the DC system provides uninterruptible 60 Hz AC power to the essential controls and instrumentation.

The main transformer boosts the plant output to 138 kV for transmission from the plant.

2.3.9.2 Transmission Line

One 138 KV transmission line transports the plant electrical output from the site to Port Limon,

distance of approximately 60 km (37 miles). The line will be supported by steel poles, with approximately 13 poles required every 3 km (7 poles per miles). The system will include all required insulator units, conductors, monitoring and protective relaying equipment.

2.3.9.3 Plant Control System

A central control room will be utilized for major plant control functions and for plant monitoring. Local instrument and control panels for the boiler will be provided to enable local startup of the boiler and auxiliaries. Electronic instruments will be powered by an uninterruptible power supply at 120 V ac, single phase. Positioners, actuators, etc. will be powered by dry, clean, oil free instrument air.

2.4 Predicted Plant Performance

A summary of performance for the 50 MW base plant and other unit sizes, is shown in Table 2-3.

2.5 Plant General Arrangement Drawings

The site selected for the coal-fired power plant is shown on Drawing SK-C-01. This site is near the area where maintenance of the geological drilling equipment is currently performed. Significant ground levelling work is required as this area is generally hilly. It is assumed that this site is not affected by floods.

Drawing SK-C-02 shows typical site plan sketch. It shows relative locations of turbine generator building, boiler, bag house, stack, coal receiving, storage, reclaim facilities, cooling tower, control room, etc. It also shows space for the future second unit in case the plant needs expansion.

Table 2-3

SUMMARY OF PERFORMANCE

	10 MW	20 MW	30 MW	40 MW	50 MW (BASE)	60 MW
Plant gross output at design condenser pressure, MW	10.5	21.0	31.6	42.1	52.6	63.1
Plant net output at design condenser pressure, MW	9.5	18.9	28.4	37.8	47.3	56.8
Net kWh produced annually at 0.7 annual plant capacity factor, 10^6 kWh	58.3	115.9	174.1	231.8	290.0	348.3
Net plant heat rate, Kcal/kwhr (Btu/kWh)	3,399 (13,487)	3,269 (12,974)	3,150 (12,499)	3,038 (12,057)	2,931 (11,631)	2,931 (11,631)
Net plant efficiency, %	25.3	26.3	27.3	28.3	29.3	29.3
Boiler heat input, 10^6 Kcal/hr) (10^6 Btu/hr)	32 (128)	62 (245)	89 (355)	115 (456)	139 (550)	166 (660)
Coal Consumption Rate, mTpd (Tpd)	187 (206)	357 (394)	518 (571)	666 (734)	784 (864)	941 (1,037)
Coal Consumption Rate metric tons/year	48,000	91,000	132,000	170,000	200,000	240,000

Note: Turbine throttle conditions - 103 kg/sq cm Abs (1465 psia); 510°C (950°F)
Design condenser pressure - 89 mm HgA (3.5 in HgA)

Drawing SK-M-04 shows a typical preliminary general equipment arrangement at the ground level of turbine-generator and boiler area. Similarly Drawing SK-M-05 shows the typical plan view of the operating floor (7.0 meter elevation) for turbine-generator and boiler.

Drawing SK-M-06 shows the typical cross section of the power plant through the turbine generator building, inplant and storage silos and mills, boiler, bag house, included draft fans and stack.

SECTION 3

COSTS AND SCHEDULE

3.0 Introduction

This section presents order of magnitude (±25%) estimates of projected capital requirements, first year operation and maintenance costs and cost of electricity for the 50 MW base case coal-fired power plant. The cost estimates and the approach used to prepare them are described in the following paragraphs.

3.1 Estimating Approach

The estimates presented in this study are based on historical Bechtel data and reports available to Bechtel, supplemented by labor rates in Costa Rica and productivity data obtained during the visit of a Bechtel engineer to Costa Rica in April 1986. The historical data and estimates have been appropriately applied to reflect the specific size and type of equipment and facilities as defined in Section 2.

The U.S. basis estimate is converted to Costa Rica basis as follows:

- Equipment and material costs on U.S. basis are converted to Costa Rica basis by applying estimated cost multipliers to the expected cost source of the purchased materials.

- Offshore shipping costs for freight, forwarding, and receiving are estimated and added to the material costs.

- Overall factors developed by these estimating procedures are that 95 percent of material costs are imported into Costa Rica, and the total overall cost for imported and local material is 85 percent of the U.S. price.

- Labor costs on U.S. basis for both manual and nonmanual labor are converted to Costa Rica basis by applying an estimated average productivity factor for Costa Rica and an estimated equivalent wage rate of $3.00 per hour in January 1987 using a conversion rate of one U.S. dollar to fifty Costa Rican Colones.

- Approximately thirty percent of the installation costs in Costa Rica are estimated to be imported and seventy percent are local.

3.2 Capital Cost Estimates

The capital cost estimate for the 50 MW plant is shown in Table 3-1. All costs are at January 1987 price levels. This estimate has been developed in accordance with the scope and technical specifications as described elsewhere in this document. In developing these estimates the cost impact on major equipment purchased in the world-wide market and maximum use of locally available materials and labor has been assumed. This recognizes the indigenous skills available due to past experience with hydro, diesel and thermal power plants.

The detailed estimate is developed on U.S. basis and adjustments for the conditions in Costa Rica are shown on an overall basis.

Capital costs in Table 3-1 <u>do not include</u> interest on money during construction of plant which is known as allowance for funds during construction (AFDC). Also, they do not include escalation during construction period and other owner's costs such as:

- Capital cost for addition of flue gas desulfurization (FGD) system
- Capital cost for providing 138 KV transmission line to Port Limon
- Preproduction cost
- Dead coal storage inventory
- Other inventory capital cost
- Land and water rights
- Import duties and taxes
- Offsite roads/road improvements
- Spare parts
- Camp/housing facilities.

Table 3-1

50 MW COAL-FIRED POWER PLANT

CAPITAL COST ESTIMATE
(JAN 1987 - U.S. BASIS)

ITEMS	U.S. DOLLARS (MILLION)
Equipment & Materials	
Boiler, Baghouse, Fans, Stack, Ductworks, etc.	11.0
Turbine Generator	5.0
Electrical Equipment incl. Sw. yard	2.3
Condenser and Cooling Tower	2.5
Feedwater System	1.7
Coal Handling (In Plant)	0.7
Coal Handling (Yard)	2.2
Ash Handling (In Plant + Yard)	2.0
Bulk Materials	6.9
Sub Total Equipment & Materials	34.3
Installation	20.5
TOTAL FIELD COSTS	54.8
Engineering & Home Office	5.5
Construction Management	1.9
Contingency and Fee	12.4
TOTAL PROJECT COST (U.S. BASIS)	74.6

CAPITAL COST ESTIMATE
(JAN 1987 - ADJUSTED FOR COSTA RICA)

ITEMS	U.S. DOLLARS (MILLION)		
	IMPORTED	LOCAL	TOTAL
Equipment & Material			29.2
Imported	27.7		
Local		1.5	
Installation			10.0
Imported	2.8		
Local		7.2	
Site Development Allowance		2.0	2.0
Engineering & Home Office	6.6		6.6
Construction Management	2.4		2.4
Contingency and Fee	7.9	2.1	10.0
TOTAL PROJECT COST: COSTA RICA BASIS	47.4	12.8	60.2

TOTAL $/KWe INSTALLED/1145

In the conceptual design it is assumed that the coal sulfur content is low and therefore a FGD system is not required to meet the environmental requirements. However, if the future investigations indicate coals with higher sulfur content requiring sulfur dioxide emission control systems, then the total project cost could increase by 15 to 20% to meet standards similar to those in the U.S. A circulating fluidized bed boiler can be used instead of the pulverized coal-fired boiler and the FGD system to control sulfur dioxide emissions. This alternative will also increase the project cost.

The addition of a 138 KV transmission line 60 KM (38 miles) long to transport power from the mine area to Port Limon is expected to cost 6 million U.S. dollars.

The capital cost estimates for other unit sizes factored from the base 50 MW unit capital cost estimates are given below:

Unit Size (Nominal)	Capital Cost Estimate dollars (million)	Dollars/Installed KW
10 MW	25.0	2381
20 MW	35.0	1667
30 MW	44.0	1392
40 MW	52.0	1235
50 MW	60.2	1145
60 MW	67.0	1062

3.3 First Year Operating and Maintenance (O&M) Costs

First year O&M costs are presented in Table 3-2. They represent annual costs of operating and maintaining the facility at 70 percent generating capacity.

Capital and O&M costs of the 138 KV transmission line and the FGD System are excluded in Table 3-2.

The first year O&M costs are divided into two categories:

- o Fixed operating costs
- o Variable operating costs

3.3.1 Fixed O&M Costs.

Fixed O&M costs include plant operating labor, maintenance, and administrative and support labor. Operating labor is estimated on the basis of experience in operating other power plants of this size and complexity in the U.S. Appropriate adjustments have been made to reflect the Costa Rica conditions including an average assumed wage rate of $4.4 per hour for plant operation. A three shift schedule is assumed to operate the plant daily.

Annual maintenance costs include manual labor, administrative and support labor, maintenance materials, spare parts, small tools and other consumable items which have been assessed based on appropriately adjusted historical data of U.S. power plants.

3.3.2 Variable O&M Costs.

In addition to the fixed maintenance cost of the plant, there are certain costs which are associated with the amount of generation from the plant, as follows:

- o General plant chemicals
- o Startup fuel
- o Water treatment supplies
- o Process water and waste water
- o Solid waste disposal

The cost of solid waste disposal is primarily for ash, assumed to be trucked about a kilometer to the mine area for disposal at an estimated cost of $1.10 per tonne.

Table 3-2

50 MW COAL-FIRD POWER PLANT
FIRST YEAR OPERATION & MAINTENANCE COST

Station Net Output - MWe	47.3
Capacity Factor	70%
Annual Electric Output - KWH (Million)	290
Net Plant Heat Rate - Btu/lb	11,631
Coal HHV - Btu/lb	7,657
Coal Cost - Dollars/Tonne	25.3
Total Project Cost (TPC) - Dollars (Million)	$60.20

1st Year Operating & Maintenance Cost	Dollars (Thousand)
Operating Labor @ 162000 MH @ $4.40	710
Maintenance Labor @ .4% of TPC	240
Maintenance Materials @ .6% of TPC	360
Administration & Supervisory Labor	290
Total Annual O&M Cost	1,600
Fixed O&M @ 65% of Total O&M	1,040
Variable O&M @ 35% of Total O&M	560
Allowance for Consumables	100
Ash Disposal @ $ 1/Tonne	20
Coal @ 25.3 Dollars/Tonne	5,060
Total Annual O&M Cost	$6,780

The operation and maintenance cost estimates for other unit sizes are given below

Unit Size (Nominal)	First Year O&M Cost Estimate Dollars (Million)
10 MW	2.3
20 MW	3.5
30 MW	4.8
40 MW	5.8
50 MW	6.8
60 MW	7.9

3.4 First Year Total Cost of Electricity

Total busbar costs of electricity are presented in Table 3-3. Total busbar cost is the sum of the capital cost component and the operating and fuel cost components. These costs are commonly expressed in mills/kwh. The capital cost component is derived from the annual capital cost or fixed charge. The fixed charge is the amount of revenue per total investment that must be collected from customers in order to pay off the original investment over the period of 30 year plant life. The fixed charge rate is expressed as a decimal that is multiplied by the original investment (total capital cost) to obtain annual fixed charge in dollars. In the U.S., fixed charge is expressed as a sum of the following items:

- Return on investment
- Annual income taxes
- Property taxes and insurance
- Annual accelerated depreciation.
- Investment tax credit.

For this study, 12.14% of the total capital cost is used as the fixed charge rate to calculate the cost of electricity. The fixed charge rate of 12.14% is estimated based on the following assumptions:

Table 3-3

50 MW COAL FIRED POWER PLANT
FIRST YEAR COST OF ELECTRICITY*

Net Plant Capacity - MWe	47.3
Capacity Factor	70%
Annual Electric Output - KWH (Million)	290
Net Plant Heat Rate - Btu/KWH	11,631
Coal HHV - Btu/lb	7,657
Coal Cost - Dollar/Tonne	25.3
Total Project Cost (TPC) - Dollar (Million)	$60.20

First Year Cost of Electricity	MILLS/KWH
Capital Cost (@12.14% Fixed Charge Rate)	25.2
Fixed Operating & Maintenance Cost for the First Year	3.6
Variable Operation & Maintenance Cost for the First Year	2.3
Fuel Cost for the First Year	17.5
Total Cost of Electricity (first year)	48.6

*Excludes 138 KV Transmission Line

Total Cost of Electricity (first year) including the cost of 138 KV transmission line, mills/KWH 51.1

- Debt ratio: 50% at 9.6% rate of return
- Preferred Stock: 15% at 10.2% rate of return
- Common Stock: 35% at 16.2% rate of return
- Discount Rate: 12.0%
- Book Life of Plant: 30 years
- Tax Life of Plant: 15 years
- Without Income Taxes
- Without Investment Tax Credit
- Inflation Rate: 10%

The estimates for total cost of electricity with other unit sizes are given below:

Unit Size (Nominal)	Estimated Electricity Cost Mills/KWH
10 MW	92.3
20 MW	67.2
30 MW	58.3
40 MW	52.4
50 MW	48.6
60 MW	45.9

The estimated first year cost of electricity for a 50 MW plant varies with the plant fixed charge rate as follows:

Fixed Charge Rate %	First Year Cost of Electricity Mills/KWH
11	46.2
12	48.3
13.5	51.4
14	52.5
15	54.6
16	56.6
17	58.7
18	60.8

It should be noted that the above estimates are of the order of magnitude type with +25% or -25% range.

3.5 Project Schedule

A summary schedule for engineering procurement and construction (EPC) has been prepared for the 50 MW coal-fired unit (Figure 3-1).

The schedule critical path runs entirely through the boiler activities from contract award through fabrication, erection and startup to the commercial operation stage.

Information from a recent study of supplying similar 50 MW boilers for an overseas location was considered in establishing the duration for the coal-fired boiler manufacture and installation.

Recent data obtained from three manufacturers for the supply of turbine/generator (T/G) units were used in developing the T/G schedule.

Based on U.S. manufacture and the straightforward nature of both boiler and turbine/generator, an extremely tight period of 4 months has been allocated for putting together the bid documents, obtaining bids, evaluating them, and placing orders for both of these major items.

For U.S. supplied equipment, a generous shipping period of 3 months, from FOB to arrival on site, has been allocated. For European T/G suppliers, the time required for placing orders would need to be increased, probably to about 6 months.

Other assumptions have been made as follows:

- Licensing or environmental regulatory requirements will not restrain the EPC Schedule.

- An FGD system will not be required

- Extremes of climatic conditions are not expected to occur at the site area

- Scheduled basic work week of 48 hours

- Construction supervisors/advisers would be provided by suppliers of imported major equipment such as boiler and T/G

- Availability of a qualified labor force in the number and skills required.

3.6 Cash Flow

The cash flow is based on the project schedule with U.S. or other foreign purchased equipment, and reflects construction conditions and labor availability in Costa Rica. The cash flow was plotted with an estimated percentage of expenditure of total capital cost versus the percentage of time of completion of the project. The cost curves for one 50 MW coal-fired unit is presented in Figures 3-2. These cash flows do not include AFDC escalation during construction and other owner costs.

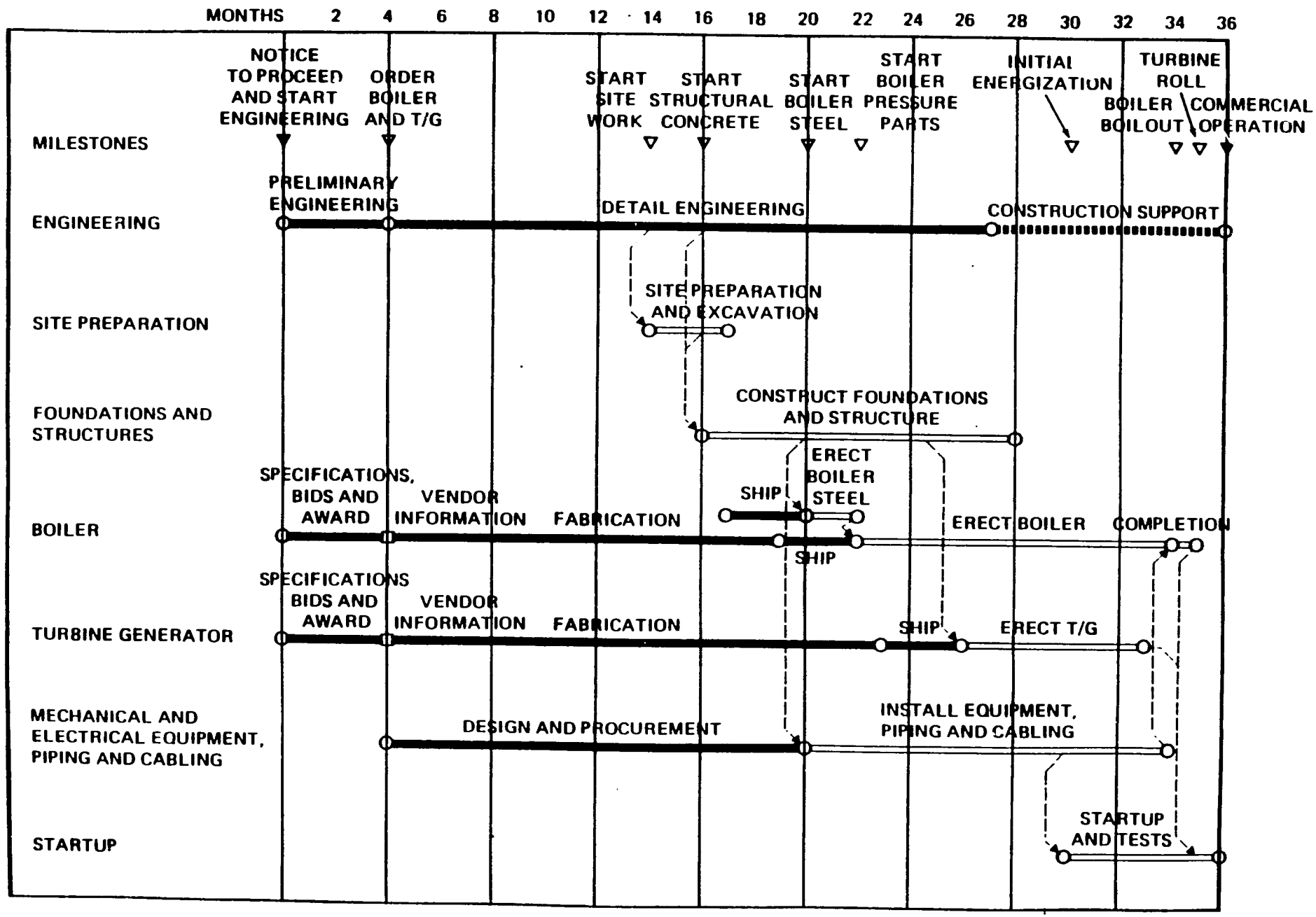

Figure 3-1 TYPICAL PROJECT SCHEDULE FOR 50 MW COAL- FIRED PLANT

3-12

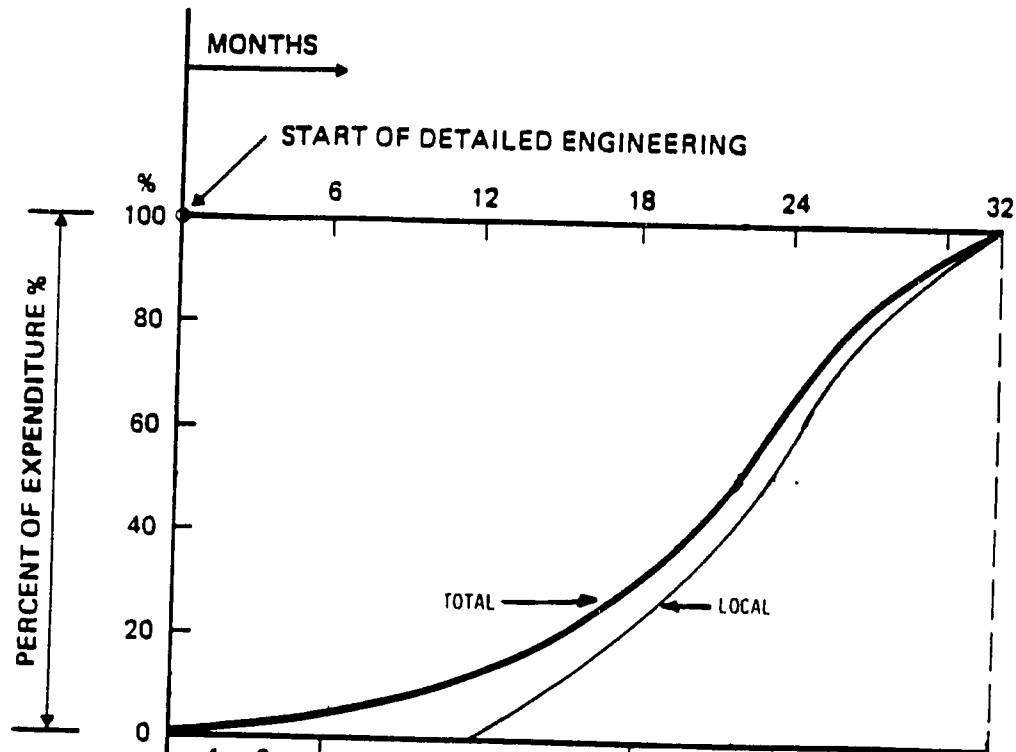

	1 – 6 MONTHS	7 – 18 MONTHS	19 – 32 MONTHS
PERCENT/ MONTHS	6	24	70
CUM. PERCENT (TOTAL)	6	30	100
CUM. PERCENT (LOCAL)	0	20	100
TOTAL CAPITAL COST (10^6)$	3.7	18.1	38.4
LOCAL CAPITAL COST (10^6)$	0	2.6	10.2
CUM. TOTAL COST(10^6)$	3.7	21.8	60.2
CUM. LOCAL COST (10^6)$	0	2.6	12.8

Figure 3-2 ESTIMATED CASH FLOW FOR TYPICAL 50 MW COAL-FIRED UNIT

SECTION 4
ENVIRONMENTAL CONSIDERATIONS

4.0 Introduction

In using coal as a fuel for power generation, three potential air pollution emissions are of primary interest: sulfur dioxide (SO_2), nitrogen oxide (N_{ox}), and particulate matter. Other significant environmental concerns are: liquid effluents, solid waste discharge, coa trace element emissions and noise. The discussion in this section review: some of the international regulations or guidelines for these emissions o discharges.

Costa Rica has no emissions standards or guidelines. The Health Ministry recommends International Standards (World Health Organization) as guidelines for exposures of individuals to pollutants. Human exposure guidelines are promulgated by a number of agencies. Most of these guidelines are based on the same body of scientific information. Minor variations frequently are the result of variations in such considerations as the desirable safety margin, and allowances for uncertainties in the underlying scientific data. To be able to make use of exposure limitations or guidelines for determining specific emission limitations for a facility requires other information not now available.

In principle, the pollutants in effluents can be controlled to a value such that when added to the pre-existing (background) levels, the resulting concentrations are within recommended exposure guidelines. However, in order to set effluent limits for new facilities with confidence that health effects or unacceptable environmental impacts will not occur, it is necessary to know the existing levels of pollutants in the affected environment. In addition, a development policy is eventually required regarding the allowable consumption of increments of degradation for a given facility so that further growth can be accommodated without unacceptable impacts. However, such work is beyond the scope of this study.

The World Bank guidelines are general in nature and their use tends to result in less restrictive limitations than would the use of a body of applicable statutes and regulations promulgated by any particular industrial country. This somewhat more liberal nature of the World Bank guidelines results in part from focusing primarily on the protection of human health. Such matters as human welfare and ecological systems are indeed considered by the World Bank, but account is taken that related protective policies can vary widely depending upon local needs and priorities.

This study is based partly on the guidelines of the World Bank (Reference 1) because of their ready availability in a usable form. The World Bank guidelines go beyond those of the World Health Organization in that specific recommendations for some, but not all, effluent limitations are provided on a generalized basis. The term "guidelines" as used in this report will be understood to mean the World Bank guidelines unless otherwise stated.

The use of the World Bank guidelines for the purposes of this study does not constitute a recommendation or a suggestion that Costa Rica adopt such guidelines or their implied policies. Costa Rica may use emission standards and ambient air quality standards of any of several countries in addition to those of the World Bank until it develops its own emissions standards.

4.1 Gaseous Emissions

Emission standards specify the maximum amount of a given pollutant which can be released into the atmosphere from a given source. Emission standards are set in most countries on an industry by industry or plant by plant basis. Some countries have established nationwide "emission guidelines" which serve as a reference point for discussions between regulatory authorities and the industry or plant concerned (Reference 3).

4.1.1 Sulfur Dioxide

Sulfur dioxide presents some unusual problems. It is a common gaseous pollutant from many fossil fuel burning sources as well as ferrous and non-ferrous smelting operations. As a consequence, it is virtually ubiquitous and presents a background value practically everywhere.

World Bank emission standards for coal-fired boilers are established with due regard to (1) background levels of sulfur dioxide, and (2) placing a reasonable limit on absolute emissions. These guidelines are presented in Table 4-1.

Table 4-2 summarizes the sulfur dioxide emission limits of a number of countries for comparison.

From Table 4-1 it is seen that two independent criteria must be met. Criterion I is primarily a function background conditions and sulfur content of feedstock. Criterion II is a function of background conditions, local meteorology and terrain, and stack height. Each criterion, when applied results in a certain sulfur removal requirement (SRR). When determining allowable emissions, the highest SRR calculated should be applied. Criterion II requires an appropriate mathematical dispersion model to determine actual concentrations.

TABLE 4-1 SULFUR EMISSION GUIDELINES

Background Air Quality (sulfur dioxide basis)	Sulfur Background Levels (ug/m^3) Annual Average	Max. 24-hour	Criterion I Max. SO_2 Emission (TPD)	Criterion II Max. allowable ground level increment to ambient (ug/m^3 One Year Average)
Unpolluted	< 50	<200	500	50
Moderately Polluted*				
Low	50	200	500	50
High	100	400	100	10
Very Polluted**	>100	>400	100	10

*For intermediate values between 50 and 100 ug/m^3 linear interpolations should be used.

**No projects with sulfur dioxide emissions are recommended in these areas.

Reference 1 presents examples of the use of Table 4-1 to some power plant cases. From those cases, assuming low existing pollution levels at the plant location, it is not expected that significant sulfur dioxide emission controls would be required for a plant 50 MW or less in size burning coal with a sulfur content of no more than 1.25 percent.

4.1.2 Nitrogen Oxides

Two types of standards are generally used for nitrogen oxides -- ambient and emissions. Ambient standards express the allowable concentration of a contaminant in the air surrounding the plant site, following discharge and mixing. Ambient levels are essential for determining possible environmental damage and for evaluating adverse physical, health, and other effects upon the surrounding area and its inhabitants.

Table 4-2

SULFUR DIOXIDE EMISSION REGULATIONS OR GUIDELINES APPLICABLE TO INDUSTRIAL BOILERS[a]

Country or Organization	Solid Fuels	Liquid Fuels[b]
European Economic Community	None	Fuel oil in zones exceeding specified levels of ambient SO_2: after June 1978: 2% S after June 1983: 1% S
England	Specified stack height to limit short-term ambient concentration (nominal 3 min. avg. 0.17 ppm SO_2)	Max. % S (effective Oct. 1980): light (12.5 cS/180°F): 3.5% inter (30 cS/180°F): 4.0% heavy (70 cS/180°F): 4.5% extra (115 cS/180°F): 5.0%
France	Stack hieght criteria, and: Rhone Zone: 1% S in fuel Paris and North Zone: 2 g SO_2/th (2.2 lb SO_2/MBtu) Power Plants: low sulfur fuel if ambient SO_2 1000 g/m^3	No. 1 oil: 2% S No. 2 oil: 4% S
Federal Republic of Germany	4 TJ/hr thermal input (1100 MWt): 1% S 4 TJ/hr: 2.75 g SO_2/kWh (1.7 lb SO_2/MBtu) Plus specified stack height to limit ambient concentration	Stack: 30 m: 0.5% S 0.04 - 4.0 TJ/h: 1% S
Spain	Bituminous or anthracite: 2400 mg/Nm^3 in flue gas Lignite: Power Plant: 9000 mg/Nm^3 Other: 6000 mg/Nm^3	Power Plants: 3000 - 4500 mg/Nm^3 Other: No. 1 oil: 1700 - 2500 mg/Nm^3 No. 2 oil: 3400 - 5000 mg/Nm^3
Sweden		Boilers: 300 MW: 20 kg/t fuel Heavy Fuel Oil (max.): General: 2.5% S South and Central: 1.0% S After 1981, except North: 1.0% S After 1984, everywhere: 1.0% S
United States	New Power Plants: 73 MWt (250 MBtu/hr heat input): 520 ng/J (1.2 lb/MBtu) maximum; SO_2 reduction (30 day avg.) of 70-90% Other New Steam Generators: 73 MWt: 520 ng/J (1.2 lb/MBtu) maximum Plus Best Available Control Technology (BACT)	New Power Plants: 73 MWt: 350 ng/J (0.8 lb/MBtu) maximum; SO_2 reduction of 90% if emissions greater than 86 ng/J (0.2 lb/MBtu) Other New Steam Generators: 73 MWt: 340 ng/J (0.8 lb MBtu) maximum Plus BACT

(a) Adapted from "Air Pollution Constraints on Increased Coal Use by Industry, An International Perspective," Journal of the Air Pollution Control Association, Vol. 31, No. 4, April 1981.

(b) Excludes gas-oil.

Emission standards express the allowable concentrations of a contaminant at the point of discharge, before any mixing with the surrounding medium (air).

Ambient air concentrations of nitrogen oxides, expressed as NO_2, should not exceed the following:

Annual Arithmetic Mean:	100 ug/m^3 (0.05 ppm)

For guidance purposes, emission levels for stationary source discharges, before mixing with the atmosphere, should be maintained as follows:

For fuel fired steam generators, as nanograms (10^{-9} gram) per Joule of heat input:

Solid fossil fuel	300

Nitrogen oxide emissions from the power plant can be reduced by a number of methods. Among these, staged combustion, low excess air operation, and flue gas recirculation are widely used.

4.2 Dust and Particulates

Two sets of guidelines exist: one for the workplace and one for the environment beyond the plant fence.

In the workplace, dust concentration limits are expressed as threshold limit value (TLV) and takes into account the number of hours in the workday and the number of workdays per week. The guidelines recommend that a plant should be designed and operated to provide actual dust levels well below the TLV.

This section addresses both mining operations and power plant operations.

4.2.1 Mining Operations

Dust and particulate matter from coal mining are usually not considered to be significant. These are generally controlled by water sprays at the working face. However, the use of water sprays results in liquid effluents discussed later.

4.2.2 Power Plant Operation

4.2.2.1 Occupational

Fuel handling at the power plant may need some controls for the protection of workers in the immediate vicinity. Breathing masks can be effective for limited periods of time. The wearing of masks for sustained periods is not recommended because of difficulties in enforcing their use. The occupational guidelines provided by the World Bank show TLVs for 8 hours exposure. The plant should be designed to give levels well below these values (no more than one-half the TLV is recommended).

TABLE 4-3 TLV FOR DUSTS
Based on 8 Hour Workday (1)

Substance	mg/m^3
Coal Dusts (Bituminous)	
Respirable (2) fraction <5% SiO_2	2.4
Respirable fraction >5% SiO_2	10/%Si+2
Inert or Nuisance Dusts (3)	
Respirable	5
Total	15

Notes: (1) For workdays other than 8 hours, apply the following correction factor:

Correction Factors = 8/Workday Hours

(2) Respirable dust is less than 10 um in size, and is measured by monitoring devices that correlate with pulmonary deposition.

(3) If quartz content is 1% or gre
quartz formula (10/%Si+2).

4.2.2.2 General Public

The guideline for stack discharges of parti
matter (dust) is:

50 mg/m^3 (dry)

'his guideline is applicable to total inert dust (<1%
iO_2) containing no carcinogenic compounds.
owever, large variations exist from one project to
nother. As a rule, the following levels should not
e exceeded:

Stack Emissions:

When background levels of dust are high,
dust emissions from the stack should not
be greater than 100 mg/m^3

Ambient Levels:

Annual geometric mean 100 ug/m^3
Maximum 24-hour concentration 500 ug/m^3

If the dust under consideration is affecting
vegetation, the annual mean and 24-hour figures
should be adjusted downwards.

The stack emissions are to be added to any fugitive
emissions (uncontrolled or non-point sources of dust)
and other point sources in the plant such as from
fuel processing. Modeling of all plant emissions is
required when a facility is being designed in order
to determine if recommended ambient levels are
exceeded.

Table 4-4 summarizes the particulate emissions limits of a number of countries for comparison.

4.3 Liquid and Solid Waste

4.3.1 Underground Coal Mining

The specific environmental effects will depend upon the mir techniques utilized and the existing geological or geochemi characteristics.

4.3.1.1 Liquid Effluents

The principal environmental pollutant resulting from underground coal mining operations is acid mine drainage. The acidity results when naturally occurring pyrite (FeS_2) in the coal seam and wastes are oxidized in the presence of air and water to form sulfuric acid (H_2SO_4) and iron sulfates. The amount and rate of acid formation and the quality of water discharged will depend upon the amount and type of pyrite in the overburden and in the coal, time of exposure, characteristics of the overburden, and amount of available water. The acidic (pH 2 to 3) effluent must be treated for pH and dissolved iron before release to water courses. Continuous acid discharges will seriously affect aquatic ecosystems.

Liquid effluents from subsurface mining and coal preparation operations should conform to the limitations shown in Table 4-5.

Table 4-4

PARTICULATE EMISSION REGULATIONS OR GUIDELINES APPLICABLE TO INDUSTRIAL BOILERS[a]

Country	Solid Fuels	Liquid Fuels[b]
England	Heat Input Rate[b] / Emission Rate MBtu/hr (MWt) — lb/hr (kg/hr) (lb/MMBtu) 10 (2.9) — 7.6 (3.4) (0.76) 100 (29.3) — 45 (20) (0.45) 200 (58.6) — 90 (41) (0.45) 300 (87.9 — 132 (60) (0.44) 500 (150) — 218 (99) (0.44) New Power Plants: 450,000 lb steam/hr (approximately 150 MWt input): 115 mg/Nm^3 Opacity: Ringelmann No. 2	Heat Input Rate[b] / Emission Rate MBtu/hr (MWt) — lb/hr (kg/hr) (lb/MMBtu) 10 (2.9) — 2.2 (1.0) (0.22) 100 (29.3) — 16 (7.3) (0.16) 200 (58.6) — 26 (12) (0.13) 300 (87.9) — 35 (16) (0.12) 500 (150) — 54 (24) (0.11)
France	3000 lb/hr (41 MWt): 1000 mg/lb (0.56 lb/MBtu) 8000 lb/hr (108 MWt): 200 mg/lb (0.11 lb/MBtu) 8000 lb/hr: 150 mg/lb (0.08 lb/MBtu) Fuel: 20% ash: 500 mg/Nm^3 Fuel: 20% ash: 350 mg/Nm^3	
Federal Republic of Germany	Particulate: 10: 250 mg/Nm^3 @ 0 m^3/hr to 100 mg/Nm^3 @ 70,000 m^3/hr Total Particulate: 500 mg/Nm^3 @ 0 m^3/hr to 150 mg/Nm^3 @ 70,000 m^3/hr Water-Tube Boilers: 500,000 m^3/hr: lignite: 100 mg/N^3 bituminous: 150 mg/Nm^3 Opacity: Ringelmann No. 1	Total Particulate 150 mg/Nm^3 @ 0 m^3/hr to 50 mg/nM^3 @ 100,000 m^3/hr; 50 mg/nM^3 100,000 m^3/hr;
Spain	New Power Plants: General Zones — Special Zones 50 MW: 500 mg/Nm^3 — 400 mg/Nm^3 50-200 MW: 350 — 300 200 MW: 200 — 200 Opacity: Ringelmann No. 1 except 2 min/hr at No. 2	New Power Plants: All Zones 50 MW: 200 mg/Nm^3 50-200 MW: 175 200 MW: 150
Sweden	--	New Boilers: 300 MW: 1.5 g/kg 300 MW: 1.0 g/kg
United States	New Power Plants: 73 MWt (250 MBtu/hr heat input): 13 ng/J (0.03 lb/MBtu) Other New Steam Generators: 73 MWt: 43 ng/J (0.1 bl/MBtu) Opacity: 20%	Same as solid fuel
World Bank	Total Particulate in Stack Gas: 100 mg/Nm^3 (dry); 150 mg/Nm^3 is acceptable if plant is located in rural area and ambient air quality standards are met	Same as solid fuel

(a) Adapted from "Air Pollution Constraints on Increased Coal Use by Industry, An International Perspective," Journal of the Air Pollution Control Association, Vol. 31, No. 4, April 1981.

(b) Complete table ranges from 1.25 to 573 MBtu/hr.

TABLE 4-5 EFFLUENT LIMITATIONS FOR ACID MINE DRAINAGE (mg/L)

Parameter	Limitation
Total suspended solids	70
Total manganese	4
Total iron	6
pH (units)	6 to 9

4.3.1.2 Disposal

When land is available and concentrations of toxicants are low enough, land disposal is the simplest technical and the most economical way to dispose of liquid effluents.

4.3.1.3 Solid Wastes

Solid wastes are generated both during underground mining and during the preparation process. The solic waste from underground mines (commonly referred to as "gob") results from the digging required to reach the coal seams. Normally this material is transported tc the surface and dumped in piles on the land. Its composition in general corresponds to the overburden found in the mining area.

Steps should be taken to assure that leachate and surface runoff from the piles does not cause harm to surface waters, or groundwater supplies. Leaching, should be monitored.

4.3.2 Power Plants

Combustion wastes consist of fly ash and bottom ash. About 99% of the fly ash is assumed to be retained by pollution abatement equipment. Bottom ash is recovered from the bottom of the boiler.

4.3.2.1 Disposal

The bottom ash is sometimes mixed with fly ash and piped to settling ponds or is dewatered and hauled by truck to an ash disposal area. Mine-mouth plants can dispose of these wastes in portions of the mine from which the coal was removed where local conditions are favorable. Whatever disposal technique is used, leaching of water-soluble constituents of the ash into the underlying soil, and perhaps into the groundwater, can occur. A liner of impervious material such as clay is effective in preventing groundwater contamination.

4.4 Trace Elements in Coal

Trace elements are generally defined as those with a relative abundance in the earth's crust of 0.1% (one part per thousand) or less. Many of the trace elements in coal are enriched in coal ash, a combustion by-product, relative to their crustal abundance, and some are elevated to toxic concentrations.

From a single 50 MW plant, it is unlikely that trace element emissions will be a problem, assuming that typical amounts occur in the coal. However, it is important to know the emission levels of these substances in order to prevent problems as coal use becomes more widespread

4.5 Noise

There are considerable variations in the recommended allowable noise levels emitted by the many individual sources existing in the environment.

Continuous noise levels above 90 dBA have detrimental effects on human performance, especially in so-called "noise-sensitive" functions, such as vigilance tasks, information gathering, and

analytical processes. Noise levels below 90 dBA can be disruptive, particularly if they have predominantly high frequency components, and are intermittent, unexpected and uncontrollable.

Noises resulting from industrial operations are generally confined within the plant structure. Machinery and equipment are the main sources, and the effects are felt mostly by the individual workers.

Controls may be accomplished through measures at the source (relocation, vibration control, etc.); installation of acoustical shields, enclosures, or other barriers to interrupt the path of the sound; or through limiting the duration of the exposure by the receiver. The first two of these measures will help reduce the noise levels in the environment outside the plant. Around boilers, limiting the duration of the exposure is common, and simple earplugs are frequently used by workers temporarily entering high noise areas.

In the absence of sensitive noise receptors such as schools and hospitals in the immediate vicinity of a facility, noise suppression sufficient to protect the workers in the plant usually results in acceptable noise levels outside the plant.

4.6 Secondary Environmental Impacts

Secondary effects on the environment are the consequences of a population influx in the town or region, and they include water and power distribution, sewage collection and treatment, housing, schools and roads.

In developed countries, the ratio between employment in the new plant and new employment in the region is usually one to seven, or one to eight. Although the conditions are different in less developed countries, the World Bank recommends the application of the same ratio. The goal of the guidelines is only to draw attention to the potential trouble and to suggest economical solutions in certain areas, thus preventing the expansion of urban slums.

In the forecasts for water and power consumptions, not only the plant requirements but also the town's and region's induced future uses should be taken into consideration. A common water intake and pumping station, for example might prove more economical for both the power plant and surrounding communities.

Sewage collection and treatment should receive special attention. Domestic and industrial garbage disposal has created problems in some developments. The disposal should be addressed in the planning stages and a suitable dump area identified.

References

1. "Environmental Guidelines," The World Bank, Office of Environmental Affairs, July 1984, Washington, D.C.

2. "The Environmental Effects of Using coal for Generating Electricity," Argonne National Laboratory, Illinois, USA, May 1977 (NTIS Catalog No. PB-267 237).

3. "Air Pollution Constraints on Increased Coal Use by Industry, an International Perspective," by Edward S. Rubin, Journal of the Air Pollution Control Association, Vol. 31, No. 4, April 1981.

APPENDIX A

The following tasks for the study are based on the current requirements of RECOPE given to Bechtel in the April 17, 1986 meeting.

Task 1. Develop a baseline preliminary conceptual design for a coal fired power plant to be located at the Uatsi mine mouth. Estimate plant performance for a specific design coal analysis. Estimate order of magnitude (± 25%) capital costs and operating costs. Calculate cost of electricity. Develop cash flows along with a milestone schedule. Based on the information developed for the baseline plant, develop capital costs by factoring for i) one 10MW plant; ii) one 20 MW plant; iii) one 30 MW plant.

Task 2. Review RECOPE's Geological Report, Dravo's Mining Feasibility Study Report and the subsequent geological investigations results developed in 1986 for this mining area. Provide comments and recommendations to RECOPE. Review RECOPE's current plans for future geological investigations in this area. These plans are intended to develop information on hydrology, rock geology, etc. for mining. Review and provide comments, recommendations, and guidelines to assist RECOPE in this investigation.

Task 3. Provide brief comments regarding the feasibility of coal substitution at the two cement factories (National Industrial Cement and Pacific Cement) based on the information gathered from these plants during Bechtel engineer's visit on 4/22/86.

Task 4. Provide brief comments regarding the feasibility of coal substitution for Bunker C oil at Moin, Colima and San Antonio power stations based on the information gathered during Bechtel engineer's visit to Costa Rica.

Task 5. Develop a list of coal uses to assist RECOPE in planning future coal utilization.

Task 6. Provide comparative prices per million Btu from a) coal, b) bunker C fuel, c) biomass, d) diesel and e) hydropower based on U.S. market except for hydropower. The hydropower costs will be based on ICE's costs which will be supplied to Bechtel by RECOPE. This information is intended for use during planning.

APPENDIX B

DESIGN BASES AND ASSUMPTIONS

) CIVIL/ARCHITECTURAL

1.1 Site Conditions

Location and Topography. The plant is to be located in the Uatsi coal development area in Costa Rica, about 60 KM (37 miles) southeast of Port Limon. Elevations in the site area vary from 50 to 200 meters (MSL) (164 to 656 feet). The topography of the area is generally hilly with much vegetation (small trees and bushes). A portion of the site area is already cleared of vegetation and is generally flat.

All major imported equipment for the plant would be unloaded at Port Limon and transported by road to the site. The road from Port Limon to the site appears satisfactory for equipment transportation, although some bridges may require strengthening.

Meteorology. The meteorological site conditions assumed in this study are presented in Table B-1. All weather data shown in the table are preliminary.

Table B-1

METEOROLOGICAL CONDITIONS

Elevation, meters (MSL) (feet)	100 (328)	
Atmospheric pressure, mm HgA (psia)	750 (14.5)	
Temperatures, ^{o}C (^{o}F)[a]	Dry Bulb	Wet Bulb
Maximum	31.1 (88)	26.7 (80)
Minimum	20.0 (68)	--
Average	26.1 (79)	--
Design	29.4 (85)	23.9 (75)
Wind Velocity		
Maximum	Not Available	
Average	Not Available	
Design (assumed for this study)	Not Available	
Prevailing direction	Not Available	
Precipitation	mm (inches)	
Average, year	2400 (94)	
Maximum, year	3200 (126)	
Maximum, mont	450 (18)	

Note: a. Dry bulb data based on data for Port Limon. Wet bulb data based on data for Panama City, Panama.

Seismic Area. The seismic activity in this region is not known. Therefore, no seismic activity is assumed and no seismic design considerations are used for the conceptual design.

Soil Conditions. Soil can best be characterized as coarse grained sandstone containing pebbles and cobbles in places.

1.2 Foundations

Reinforced concrete mat foundations are assumed for the generator units. Foundations for other structures are assumed to be strip or spread footings founded in the overburden, bedrock or compacted overfill.

1.3 Buildings

An administration building is required for the power generating facility. Facilities such as locker rooms, water closets, etc., ar required.

In general, all the plant process equipment for the power generatin facility is located in a covered turbine building which is not heated. Air conditioning will be provided only in the control room

2.0 MECHANICAL PLANT DESIGN

2.1 General

The power generating facility consists of one condensing turbine-generator unit. The unit is rated at 52.6 MW gross output at the generator terminals with 103 kg/sq cm Abs (1465 psia), 510°C (950°F turbine throttle steam conditions, 225°C (437°F) final feedwater temperature, and 89 mm (3.5 inches) of HgA condenser pressure. Fiv stages of feedwater heating are used. Circulating water is cooled a mechanical draft cooling tower.

2.2 Codes and Standards

It is assumed that the conceptual plant design is required to meet U.S. standards for safety of personnel and not required to meet oth U.S. standards such as U.S. environmental emission standards.

2.3 Design Basis Fuels

The design fuel used in the study is coal. An analysis of this coa is presented in Table B-2. The backup fuel will be No. 2 fuel oil.

Table B-2

COAL

Proximate Analysis		Ultimate Analysis	
Component	Weight %	Component	Weight %
Moisture	26.85	Carbon	31.90
Ash	12.53	Hydrogen	3.23
Volatile Matter	27.83	Sulfur	0.64
Fixed Carbon	32.79	Oxygen	27.66
Total	100.00	Nitrogen	0.51
		Ash	9.21
		Moisture	26.85
		Total	100.00

HHV, Kcal/kg (Btu/lb) = 4254 (7657)

Ash analysis is not availabl

2.4 Design Fuel Flow Rates

The design fuel flow rate for the plant is about 33 metric tons/hr (36 tons/hr), or about 200,000 metric tons/year (220,000 tons/year). The above values are based on an annual plant capacity factor of 0.7

2.5 Process Makeup Water

The makeup water for the power generation facility is assumed to come from a small stream bordering the site. This stream appears adequate to provide most of the water required by the plant. However, during dry periods water flow may not be adequate. A holding pond or deep well pumps may be required. Makeup water to the steam cycle will be provided from this source through a set of demineralizers. All other makeup water is provided directly from this source without treatment.

2.6 Environmental Design Bases

2.6.1 Flue Gas Emissions

The emissions from the power generating facility are estimated as presented in Table B-3. These emissions are compared with those from a typical U.S. industrial power plant. The stack height is assumed to be 91 meters (300 ft.) for cost purposes.

The 50 MW coal-fired conceptual design plant has higher sulfur dioxide emissions compared to U.S Industrial Plant.

Table B-3

FLUE GAS EMISSIONS

	kg/10^6 kcal HEAT INPUT (LB/10^6 BTU)		
	SO_2	NO_X	Particulate
50 MW Coal-Fired Plant (Conceptual Design)	3.01 (1.67)	1.26 (0.7)	0.18 (0.1)
Typical U.S. Industrial Plant	2.16 (1.2)	1.26 (0.7)	0.18 (0.1)

2.6.2 Solid Waste Disposal

Fly ash and bottom ash collected in the power generation facility will be hauled away by trucks for disposal. It is assumed that the solid wastes generated in the power generating facility are classified as nonhazardous material and, therefore, can be disposed of safely in the mine.

2.7 Utility and Process Tie-Ins for Cost Estimating

The utility and process stream tie-in data that are assumed for this study are presented in Table B-4.

Table B-4

UTILITY AND PROCESS TIE-INS

	Item	Assumed Tie-Ins
1.	Electrical power	See Electrical Single Line Diagram SK-E-01
2.	Makeup water	From holding pond for the stream at site
3.	Fire protection water	From holding pond for the stream at site
4.	Domestic water	From holding pond for the stream at site
5.	Compressed air	A separate compressed air system
6.	Coal	1 km long conveyor starting from mine mouth
7.	Sulfuric acid, caustic and ammonia	Truck delivery to site
8.	Hydrazine, morpholine, phosphate, etc.	Chemicals delivered in sacks or 55-gallon drums
9.	Carbon dioxide gas	Truck delivery to site
10.	Clean lube oil	Truck delivery to site
11.	Fly ash	Truck removal from power plant
12.	Wastewater	Holding pond at site for settling and pH control
13.	Dirty lube oil	Truck away from plant site

3.0 CONTROL SYSTEMS/ELECTRICAL

3.1 Instruments and Controls

The conceptual design assumes the following control concept:

- o A central control room for plant operation and monitoring.
- o Local instruments and controls panels for boiler to enable local startup of boiler and auxiliaries. After startup, control can be transferred to the central control room.
- o Uninterruptible source of power supply at 120 V ac, single phase for electronic instruments.
- o Critical circuits hard-wired to dedicated control panels.
- o Instrument air supply at 6.7 to 8.8 kg/sq cm (80 to 110 psig).

3.2 Electrical

The electrical generation is at 13.8 kVA, 3 phase, 60 Hz. An auxiliary transformer steps down the voltage from 13.8 kV to 4.16 kV to supply electric power to the various auxiliary equipment in the power plant. Auxiliary power demand is assumed to be about 10% of the gross generation at the generator terminals. The generation voltage is stepped up to 138kV with a main transformer to transmit power through a 60 km long transmission line to Port Limon area. The Single Line Diagram SK-E-01 shows the scope fo electrical work included in this study. The 60 km long 138 kV transmission line is treated as a separate item.

APPENDIX C

LIST OF MAJOR EQUIPMENT

A. Turbine and auxiliaries

Quantity	Item	Description
1	Turbine/Generator	Condensing w/5 uncontrolled extractions Throttle conditions 207,700 kg/hr (458,000 lb/hr) 103 kg/sq cm Abs (1465 psia) 510°C (950°F) Extraction conditions 0.4 kg/sq cm Abs (6 psia) 1.4 kg/sq cm Abs (20 psia) 3.7 kg/sq cm Abs (52 psia) 12.1 kg/sq cm Abs (172 psia) 28.0 kg/sq cm Abs (398 psia) Exhaust conditions 89 mm HgA (3.5 in HgA) Output 52.6 MW Generator 59 MVA, 0.9 PF, 13.8 KV 3 phase, 60 Hz Including Static exciter Voltage regulator Stop and control valves Lube oil system Electro-hydraulic governor system Gland steam system Turning gear, 15 HP motor Supervisory instrumentation Air cooled generator, exciter, lube oil
1	Condenser	89 mm HgA (3.5 in HgA) 77 mm Kcal/hr (306 MM Btu/hr) 5,557,000 kg/hr (24,500 gpm water flow)
2	Vacuum Pump	Liquid ring type, 2 stage Motor driven, 200 HP
2	Condensate Pump	Vertical - can type Motor driven, 75 HP 175,000 kg/hr (770 GPM), 69 m (225 ft) TDH
1	Feedwater Heater No. 1	Closed - shell and tube 0.4 kg/sq cm Abs (5.6 psia) extraction pressure 6,600 kg/hr (14,500 lb/hr) extraction flow

Quantity	Item	Description
	(Feedwater Heater No. 1)	168,000 kg/hr (370,000 lb/hr) feedwater flow 2.8°C (5°F) TTD, 5.6°C (10°F) DC approach
1	Feedwater Heater No. 2	Closed - shell and tube 1.3 kg/sq cm Abs (18.6 psia) extraction pressure 9,800 kg/hr (21,700 lb/hr) extraction flow 167,800 kg/hr (370,000 lb/hr) feedwater flow 2.8°C (5°F) TTD, 5.6°C (10°F) DC approach
1	Feedwater Heater No. 3	Open - deaerating spray type 3.4 kg/sq cm Abs (48.4 psia) extraction pressure 10,700 kg/hr (23,600 lb/hr) extraction flow 210,000 kg/hr (463,000 lb/hr) outlet flow
2	Feedwater Pumps	Horizontally split case - multistage Motor Drive, 1500 HP 238,000 kg/hr (1050 GPM), 1230 m (4200 ft) TDH
1	Feedwater Heater No. 4	Closed - shell and tube type 11.2 kg/sq cm Abs (160 psia) extraction pressure 15,100 kg/hr (33,400 lb/hr) extraction flow 210,000 kg/hr (463,000 lb/hr) feedwater flow 2.8°C (5°F) TTD, 5.6°C (10°F) DC approach
1	Feedwater Heater No. 5	Closed - shell and tube type 26.0 kg/sq cm Abs (370 psia) extraction pressure 17,800 kg/hr (39,200 lb/hr) extraction flow 210,000 kg/hr (463,000 lb/hr) feedwater flow 0°C (0°F) TTD, 5.6°C (10°F) DC approach
1	Bridge Crane	40 ton with auxiliary hook
2	Auxiliary Cooling Water Heat Exchangers	Water/Water heat exchanger 0.8 mm Kcal/hr (3 MM Btu/hr) heat load

Quantity	Item	Description
2	Circulating Water Pumps	Vertical, mixed flow Motor driven, 900 HP 5,557,000 kg/hr (24,500 gpm)/31 m (100 ft) TDH
1	Cooling Tower	Mechanical draft, 75°F wet bulb temperature, 6.7°C (12°F) approach, 13.9°C (25°F) range, 86 mm Kcal/hr (340 MM Btu/hr) duty
1	Chemical Feed System	Consisting of three systems, one each for hydrazine, morpholine and sodium phosphate. Each system is made up of one batch tank and two full capacity feed pumps.
1	Make-up Water Treating System	2-trains of 6800 kg/hr (30 gpm) each and consisting of a feed pump, a carbon filter, a cation unit, an anion unit, and a mixed bed unit.
1	Caustic Storage Tank	7.6 cu meters (2,000 gal) - horizontal cylindrical, carbon steel, heat traced
1	Acid Storage Tank	7.6 cu meters (2,000 gal) - horizontal cylindrical, carbon steel
2	Service Water Pumps	Horizontal - single stage Motor driven, 25 HP 454,000 kg/hr (2000 gpm)/9.1 m (30 ft) TDH
2	Auxiliary Cooling Water Pumps	Horizontal - single stage Motor driven, 3 HP 45,400 kg/hr (200 gpm)/9.1 m (30 ft) TDH
1	Neutralization Sump	37.9 cu meters (10,000 gal) - concrete, epoxy lined w/2 full capacity motor driven pumps 22,700 kg/hr (100 gpm)/30.5 m (100 ft) TDH, 5HP
2	Sump Pumps	Vertical centrifugal Motor driven, 1 HP 4500 kg/hr (20 gpm)/6.1 m (20 ft) TDH
1	Condensate Storage Tanks	76 cu meters (20,000 gal), epoxy lined carbon steel
2	Make-up Water Pumps	Horizontal centrifugal Motor driven, 30 HP 175,000 kg/hr (770 gpm)/30.5 m (100 ft) TDH

Quantity	Item	Description
1	Compressed Air Package	Consisting of 2 reciprocating air compressors, motor driven, 150 HP 2 air dryers 1 air receiver
1	Lube Oil Storage Tank	41.6 cu meters (11,000 gal) complete w/ transfer pumps
1	Lube Oil Centrifuge	1590 kg/hr (7 gpm)
B. Boiler and auxiliaries		
1	Steam generator	Drum type, subcritical, natural circulation, SHO conditions: 105.5 kg/sq cm (1485 psig), 511°C (952°F), 207,700 kg/hr (458,000 lb/hr) Economizer inlet: 225°C (437°F) Main fuel: coal - 4254 Kcal/kg (7,657 Btu/lb) Auxiliary fuel: No. 2 fuel oil
1	Air preheater	Air heater
2	Forced draft (FD) fan	Centrifugal type, motor driven 150 HP, 1020 a m^3/min (36,000 acfm), 356 mm (14 inch) WG
2	Induced draft (ID) fan	Centrifugal type, motor driven 600 HP, 1954 a m^3/min (69,000 acfm), 775 mm (30.5 inch) WG
3	Coal pulverizer	Bowl mill type, motor driven, 11 mtph (12 tph)
2	Primary air (PA) fan	Centrifugal type, motor driven 75 HP, 198 a m^3/min (7,000 acfm), 890 mm (35 inch) WG
3	Coal feeder	Gravimetric type, motor driven, 11 mtph (12 tph)
3	Inplant coal silo	8 hour storage, 270 mtons (300 tons)
1	Bag house	Particulate removal equipment, pulse jet type with emergency bypass, inlet flue gas flow 3115 a m^3/min (110,000 acfm)/149°C (300°F)
1	Stack	Self-supporting concrete with steel liner, 91 meters (300 feet) high

Quantity	Item	Description
1	Blowoff tank	1.2 meters (4 foot) diameter x 2.7 meters (9 foot) high, vertical, carbon steel
C. Fuel Handling		
1	Mine conveyor	Belt type, motor driven, 61 cm (24 inches) wide, 200 mtph (220 tph), 1005 meters (3300 feet) long
1	Belt scale	Inline type, 0-227 mtph (0-250 tph) capacity
2	Live storage silo	Concrete, 11 meters (36 foot) diameter, 1179 mton (1300 ton) coal capacity
1	Dead storage makeup conveyor	Belt type, motor driven, 61 cm (24 inches) wide, 200 mtph (220 tph), 46 meters (150 feet) long
1	Dead storage makeup pi chute	Telescopic type, complete with hoisting/lowering electric winch
2	Live storage feeder	Vibratory type, 0-109 mtph (0-120 tph) capacity
1	Live storage dust collector	Pulse jet type bag house with exhauster and dust return system
1	Coal conveyor-live storage to crusher house	Belt type, motor driven, 46 cm (18 inches) wide, 68 mtph (75 tph), 85 meters (280 feet) long
1	Magnetic separator for live storage to crusher house conveyor	Inline, self-cleaning, electro-magnetic type
1	Emergency reclaim feede	Vibratory type, 0-109 mtph (0-120 tph) capacity
1	Emergency reclaim conveyor	Belt type, motor driven, 46 cm (18 inches) wide, 68 mtph (75 tph), 245 meters (270 feet) long
1	Emergency reclaim hoppe	11 mton (12 ton) capacity with 10 cm x 10 cm (4 inch x 4 inch) Grizzly
1	Magnetic separator for emergency reclaim conveyor	Inline, self-cleaning electro-magnetic type
2	Coal crushers	Single row jaw type with built in bypass, 109 mtph (120 tph) capacity

Quantity	Item	Description
2	Reclaim conveyor to boiler house	Belt type, motor driven, 46 cm (18 inches) wide, 68 mtph (75 tph), 189 meters (620 feet) long
1	Crusher house dust collector	Pulse jet type bag house with exhauster and dust return system
1	Inplant silo dust collector	Pulse jet type bag house with exhauster and dust return system
1	Coal dozer/loader	Diesel, articulated, 4 wheel drive
1	Surge bin	10 mton (11 ton) capacity with two bottom openings (one for Unit 1 and one for future Unit 2)
1	Surge bin feeder	Vibratory type, 0-109 mtph (0-120 tph) capacity
2	Cascade conveyors	Belt type, motor driven, 46 cm (18 inches) wide, 68 mtph (75 tph), 10 meters (33 feet) long

D. Ash Handling

1	Economizer ash hopper	4 hour storage capacity 2.1 mton (2.3 tons)
1	Economizer ash conveyor	Drag chain type, 1.3 mton/hr (1.4 ton/hr)
1	Submerged scraper conveyor	Water submerged drag chain conveyor, 2.7 mtons/hr (3 tons/hr)
2	Bottom ash water recirculation pumps	Sump pump, 5670 kg/hr (25 gpm), 7.6 m (25 ft.) TDH
2	Bottom ash water booster pumps	Centrifugal pump, 11,300 kg/hr (50 gpm), 24.4 m (80 ft.) TDH
3	Mill reject hoppers with jet pulsion pumps	4 hour storage capacity 1.1 mton (1.2 tons)
1	Fly ash pneumatic (vacuum) conveyor transport pipes	8.4 mtph (9.2 mph) of fly ash transporting capacity
1	Fly ash storage silo	300 mtons (331 tons) capacity with ash separator and bag filter
2	Fly ash pneumatic conveyor exhauster	Positive displacement type (full capacity)

Quantity	Item	Description
E. Electrical		
1	Main Transformer	55 MVA, OA 13.8 - 138 kV, 3 Phase, 60 Hz
1	High Voltage Circuit Breaker	138 kV, 1200 A, 3 Phase
2	High Voltage Disconnect Switch	138 kV, 1200 A, 3 Phase
1	Unit Auxiliary Transformer	8/10 MVA, OA/FA 13.8 - 4.15 kV, 3 Phase, 60 Hz
1	Station Service Transformer	8/10 MVA, OA/FA 13.8 - 4.15 kV, 3 Phase, 60 Hz
1	Medium Voltage Circuit Breaker	34.5 kV, 600 A, 3 Phase
1	Medium Voltage Disconnect Switch	34.5 kV, 600 A, 3 Phase
2	Medium Voltage Switchgear	4.16 kV, 2000 A, breakers (4) 1200 A breakers (4) M.V. starters (14)
2	Load Center Transformer	4.16 kV - 480 V 500 kVA, 3 Phase
2	Load Center Transformer	4.16 kV - 480 V 1500 kVA, 3 Phase
2	Load Center Bus and Switchgear	480 V, 1200 A, 3 Phase
2	Load Center Bus and Switchgear	480 V, 2000 A, 3 Phase
9	Motor Control Center (MCC)	480 V, 600 A, 3 Phase
2	Power Distribution Panel	480V, 3 Phase
2	125 V DC Battery and Distribution System	125 V, dc
2	Uninterruptible Power Supply	120 V, dc

APPENDIX D

COMBUSTION CALCULATION

BOILER FUEL ULTIMATE ANALYSIS

*CARBON	31.9000 %
*HYDROGEN	3.2300 %
*OXYGEN	27.6600 %
*NITROGEN	0.5100 %
*SULFUR	0.6400 %
*WATER	26.8500 %
*ASH	9.2100 %

HIGH HEATING VALUE

*HHV	7,657.0000 BTU/LBM
DULONG'S HHV	4,524.3423 BTU/LBM

OXYGEN REQUIRED FOR COMBUSTION

CARBON	0.8498 LB/LB OF FUE
HYDROGEN	0.2564 LB/LB OF FUE
SULFUR	0.0064 LB/LB OF FUE
LESS OXYGEN IN FUEL	-0.2766 LB/LB OF FUE
NET OXYGEN REQD	0.8360 LB/LB OF FUE
*EXCESS OXYGEN	20.0000 %
TOTAL OXYGEN REQD	1.0032 LB/LB OF FUE
EXCESS OXYGEN	0.1672 LB/LB OF FUE

COMBUSTION AIR REQUIRED

CARBON	3.7357 LB/LB OF FUE
HYDROGEN	1.1269 LB/LB OF FUE
SULFUR	0.0281 LB/LB OF FUE
LESS COMBUSTION AIR IN FUEL	-1.2159 LB/LB OF FUE
NET COMBUSTION AIR REQD	3.6748 LB/LB OF FUE
TOTAL DRY COMBUSTION AIR REQD	4.3333 LB/LB OF FUE
TOTAL COMBUSTION AIR REQD	4.4098 LB/LB OF FUE
EXCESS COMBUSTION AIR	0.7350 LB/LB OF FUE
WATER IN COMBUSTION AIR	0.0765 LB/LB OF FUE

PRODUCTS OF COMBUSTION

CARBON AS CO2	1.1688 LB/LB OF FUE
WATER FROM COMBUSTION	0.2887 LB/LB OF FUE
WATER IN FUEL	0.2685 LB/LB OF FUE
WATER IN COMBUSTION AIR	0.0765 LB/LB OF FUE
SULFUR AS SO2	0.0128 LB/LB OF FUE
NITROGEN IN FUEL	0.0051 LB/LB OF FUE
NITROGEN IN COMBUSTION AIR	3.3302 LB/LB OF FUE
EXCESS OXYGEN	0.1672 LB/LB OF FUE
TOTAL WEIGHT OF WET FLUE GAS	5.3177 LB/LB OF FUE
TOTAL WEIGHT OF DRY FLUE GAS	4.6840 LB/LB OF FUE
H2O IN FLUE GAS	11.9155 %
O2 IN FLUE GAS	3.1441 %
CO2 IN FLUE GAS	21.9798 %
SO2 IN FLUE GAS	0.2405 %
N2 IN FLUE GAS	62.7201 %

FLUE GAS DENSITY

CO2	2.6558	MOLES/100 LB FUEL
SO2	0.0200	MOLES/100 LB FUEL
O2	0.5225	MOLES/100 LB FUEL
N2	11.9059	MOLES/100 LB FUEL
H2O	3.5171	MOLES/100 LB FUEL
TOTAL OF WET GAS	18.6213	MOLES/100 LB FUEL
MOLECULAR WEIGHT OF WET GAS	28.5569	LB/MOLE
DENSITY OF WET GAS AT 80 DEG F	0.0725	LB/CUFT
SPVOL OF WET GAS AT 80 DEG F	13.7970	CUFT/LB

FLUE GAS LOSSES AND BOILER EFFICIENCY

*AMBIENT TEMP	80.0000	FAHR
*AMBIENT PRESS	14.6959	PSIA
*REL HUMID	80.0000	%
*FLUE GAS TEMP	260.0000	FAHR
COMBUSTION AIR SP HUMID	0.0176	LBS H2O/LB DRY AIR
*STATIC PRESS	14.2590	PSIA
MEAN SP HEAT CO2	9.3901	BTU/MOLEF
MEAN SP HEAT SO2	10.0695	BTU/MOLEF
MEAN SP HEAT O2	7.0900	BTU/MOLEF
MEAN SP HEAT N2	6.9077	BTU/MOLEF
ENTH WATER IN FUEL	48.0365	BTU/LBM
ENTH WATER IN COMBUSTION AIR	1,096.5292	BTU/LBM
ENTH WATER IN FLUE GAS	1,176.9869	BTU/LBM
LOSS TO WATER IN AIR	6.1519	BTU/LBM
LOSS TO WATER OF COMB & IN FUEL	629.0117	BTU/LBM
LOSS TO CO2	44.8887	BTU/LBM
LOSS TO SO2	0.3618	BTU/LBM
LOSS TO O2	6.6682	BTU/LBM
LOSS TO N2	148.0358	BTU/LBM
TOTAL FLUE GAS LOSS	835.1180	BTU/LBM
STACK LOSS	10.9066	%
*RADIATION LOSS	0.5000	%
*UNACCOUNTED LOSS	0.5000	%
*UNBURNT CARBON LOSS	1.0000	%
TOTAL LOSSES	12.9066	%
BOILER EFF	87.0934	%
*COMBUSTION RATE	71,918.0000	LBS/HR

FLUE GAS FLOWS

CO2 FLOW	84,058.9091	LBS/HR
H2O FLOW	45,569.0976	LBS/HR
SO2 FLOW	919.6298	LBS/HR
N2 FLOW	239,864.5845	LBS/HR
O2 FLOW	12,024.2336	LBS/HR
TOTAL FLUE GAS FLOW	382,436.4546	LBS/HR
TOTAL FLUE GAS FLOW	114,605.9687	ACFM

COMBUSTION AIR CONDITIONS

H2O IN COMBUSTION AIR	1.7339	%
O2 IN COMBUSTION AIR	22.7486	%
CO2 IN COMBUSTION AIR	0.0000	%
SO2 IN COMBUSTION AIR	0.0000	%
N2 IN COMBUSTION AIR	75.5175	%
COMBUSTION AIR TEMP	80.0000	FAHR
COMBUSTION AIR FLOW	317,142.1024	LBS/HR

BOILER CONDITIONS

*OUTLET PRESS	1,500.0000	PSIA
OUTLET TEMP	952.0140	FAHR
OUTLET FLOW	458,192.0325	LBS/HR
*OUTLET ENTH	1,461.2100	BTU/LBM
*SUPERHEATER DP	150.0000	PSI
*ECONOMIZER DP	30.0000	PSI
INLET PRESS	1,680.0000	PSIA
DRUM PRESS	1,650.0000	PSIA
BLOWDOWN TEMP	609.0482	FAHR
*BLOWDOWN FLOW	1.0000	%
BLOWDOWN ENTH	630.3582	BTU/LBM
SOOTBLOWING TEMP	609.0482	FAHR
*SOOTBLOWING FLOW	100.0000	LBS/HR
SOOTBLOWING ENTH	1,161.6254	BTU/LBM
FEEDWATER TEMP	437.0749	FAHR
FEEDWATER FLOW	462,873.9529	LBS/HR
*FEEDWATER ENTH	416.7800	BTU/LBM
HEAT INPUT	550.6761	MMBTU/HR
HEAT OUTPUT	479.6026	MMBTU/HR

APPENDIX E

HEAT BALANCE CALCULATION

BOILER CONDITIONS

.OUTLET PRESS	1,500.0000	PSIA
OUTLET ENTH	1,461.2106	BTU/LBM
*ECONOMIZER DP	30.0000	PSI
*SUPERHEATER DP	150.0000	PSI
FW INLET ENTH	416.7820	BTU/LBM
*BLOWDOWN FLOW	1.0000	%
*SOOTBLOWING FLOW	100.0000	LBS/HR
*BOILER EFF	87.0000	%
OUTLET FLOW	457,721.0183	LBS/HR
*HEAT INPUT	550.7000	MMBTU/HR
FW INLET PRESS	1,680.0000	PSIA
FW FLOW	462,398.2285	LBS/HR
DRUM PRESS	1,650.0000	PSIA
OUTLET TEMP	952.0150	FAHR
BLOWDOWN ENTH	630.3582	BTU/LBM
BLOWDOWN TEMP	609.0482	FAHR
SOOTBLOWING TEMP	609.0482	FAHR
SOOTBLOWING ENTH	1,161.6254	BTU/LBM
*PRESS DROP TO TURBINE	35.0000	PSI

THROTTLE CONDITIONS

*THROTTLE TEMP	950.0000	FAHR
*THROTTLE PRESS	1,465.0000	PSIA
*FULL LOAD DP TO INLET STAGE	59.0000	PSI
INLET STAGE INLET PRESS	1,406.0000	PSIA
INLET STAGE INLET ENTR	1.5868	BTU/LBMR
ACTUAL THROTTLE FLOW	457,721.0183	LBS/HR
THROTTLE ENTH	1,461.2106	BTU/LBM

GLAND CONDITIONS

*FLOW TO GE COND	980.0000	LBS/HR
*GLAND EXHAUST ENTH	1,443.3200	BTU/LBM
*HP GLAND SEAL LEAKOFF FLOW	1,640.0000	LBS/HR
*HP GLAND SEAL LEAKOFF ENTH	1,443.3200	BTU/LBM
*HP LEAKOFF SUPPLY TO LP GLAND	660.0000	LBS/HR
GLAND LEAKOFF DUMP FLOW TO COND	980.0000	LBS/HR

6TH STAGE CONDITIONS

*STAGE EFF	84.0000	%
OUTLET TEMP	636.9230	FAHR
OUTLET ENTH	1,328.6841	BTU/LBM
OUTLET ENTR	1.6103	BTU/LBMR
OUTLET SAT STEAM ENTH	1,204.5748	BTU/LBM
OUTLET SAT FLUID ENTH	423.6185	BTU/LBM
OUTLET QUALITY	100.0000	%
OUTLET PRESS	398.0000	PSIA
STAGE FLOW	455,101.0183	LBS/HR
MECHANICAL OUTPUT	17,671.5367	KW

5TH STAGE CONDITIONS

*STAGE EFF	84.0000	%
OUTLET TEMP	469.4885	FAHR
OUTLET ENTH	1,255.3462	BTU/LBM
OUTLET ENTR	1.6256	BTU/LBMR
OUTLET SAT STEAM ENTH	1,196.1849	BTU/LBM
OUTLET SAT FLUID ENTH	342.2426	BTU/LBM
OUTLET QUALITY	100.0000	%
OUTLET PRESS	172.0000	PSIA
STAGE FLOW	415,902.7568	LBS/HR
MECHANICAL OUTPUT	8,936.8474	KW

4TH STAGE CONDITIONS

*STAGE EFF	84.0000	%
OUTLET TEMP	283.4965	FAHR
OUTLET ENTH	1,169.0733	BTU/LBM
OUTLET ENTR	1.6477	BTU/LBMR
OUTLET SAT STEAM ENTH	1,174.8536	BTU/LBM
OUTLET SAT FLUID ENTH	252.7535	BTU/LBM
OUTLET QUALITY	99.3731	%
OUTLET PRESS	52.0000	PSIA
STAGE FLOW	382,552.4441	LBS/HR
MECHANICAL OUTPUT	9,670.0525	KW

3RD STAGE CONDITIONS

*STAGE EFF	84.0000	%
OUTLET TEMP	227.9603	FAHR
OUTLET ENTH	1,109.6485	BTU/LBM
OUTLET ENTR	1.6641	BTU/LBMR
OUTLET SAT STEAM ENTH	1,156.3211	BTU/LBM
OUTLET SAT FLUID ENTH	196.2685	BTU/LBM
OUTLET QUALITY	95.1385	%
OUTLET PRESS	20.0000	PSIA
STAGE FLOW	358,991.5963	LBS/HR
MECHANICAL OUTPUT	6,250.5169	KW

2ND STAGE CONDITIONS

*STAGE EFF	84.0000	%
OUTLET TEMP	170.0534	FAHR
OUTLET ENTH	1,042.8858	BTU/LBM
OUTLET ENTR	1.6843	BTU/LBMR
OUTLET SAT STEAM ENTH	1,134.2393	BTU/LBM
OUTLET SAT FLUID ENTH	138.0273	BTU/LBM
OUTLET QUALITY	90.8299	%
OUTLET PRESS	6.0000	PSIA
STAGE FLOW	337,280.3994	LBS/HR
MECHANICAL OUTPUT	6,597.6390	KW

1ST STAGE CONDITIONS

*STAGE EFF	84.0000	%
OUTLET TEMP	120.5555	FAHR
OUTLET ENTH	981.4596	BTU/LBM
OUTLET ENTR	1.7045	BTU/LBMR

OUTLET SAT STEAM ENTH	1,113.8219	BTU/LBM
OUTLET SAT FLUID ENTH	88.5210	BTU/LBM
OUTLET QUALITY	87.0904	%
OUTLET PRESS	1.7190	PSIA
STAGE FLOW	322,795.0199	LBS/HR
MECHANICAL OUTPUT	5,809.5721	KW
TOTAL EXHAUST FLOW	323,455.0199	LBS/HR

HP HTR #2 EXT CONDITIONS

*EXT PRESS	398.0000	PSIA
TOTAL EXT FLOW	39,198.2615	LBS/HR

HP HTR #1 EXT CONDITIONS

*EXT PRESS	172.0000	PSIA
TOTAL EXT FLOW	33,350.3127	LBS/HR

LP HTR #2 EXT CONDITIONS

*EXT PRESS	20.0000	PSIA
TOTAL EXT FLOW	21,711.1969	LBS/HR

LP HTR #1 EXT CONDITIONS

*EXT PRESS	6.0000	PSIA
TOTAL EXT FLOW	14,485.3795	LBS/HR

DA EXT CONDITIONS

*EXT PRESS	52.0000	PSIA
TOTAL DA EXT FLOW	23,560.8478	LBS/HR

COND AND CIRC WATER CONDITIONS

*CONDENSATE SUBCOOLING	1.0000	FAHR
*COND PRESS	1.7190	PSIA
COND SATURATION TEMP	120.5555	FAHR
*CIRC WATER TEMP RISE	25.0000	FAHR
CIRC WATER FLOW	23,279.0374	GPM
CIRC WATER RETURN TEMP	112.0000	FAHR
*AMBIENT WET BULB TEMP	75.0000	FAHR
*CIRC WATER APPROACH TEMP	12.0000	FAHR
*CYCLES OF CONCENTRATION	5.0000	
CIRC WATER RETURN TEMP	112.0000	FAHR
CIRC WATER SUPPLY TEMP	87.0000	FAHR
COOLING TOWER MAKEUP	363,734.9587	LBS/HR
EVAPORATION AND DRIFT	290,987.9669	LBS/HR
COOLING TOWER BLOWDOWN	72,746.9917	LBS/HR
CONDENSATE LOAD	290.9880	MMBTU/HR
*MAKEUP WATER TEMP	80.0000	FAHR
MAKEUP WATER ENTH	48.0753	BTU/LBM
MAKEUP WATER FLOW	5,177.2102	LBS/HR

CONDENSATE PUMP CONDITIONS

CONDENSATE FLOW	366,788.8065	LBS/HR
CONDENSATE INLET TEMP	119.1118	FAHR

CONDENSATE INLET ENTH	87.0860	BTU/LBM
CONDENSATE INLET ENTR	0.1631	BTU/LBMR
CONDENSATE INLET DENS	61.7264	LB/CUFT
COND PUMP OUTLET PRESS	98.3600	PSIA
*COND PUMP EFF	75.0000	%
COND PUMP OUTLET TEMP	119.1118	FAHR
COND PUMP OUTLET ENTH	87.0860	BTU/LBM
COND PUMP ENTH RISE	0.0000	BTU/LBM
COND PUMP HORSEPOWER	54.1964	HP
*PRESS DROP TO GE COND	5.0000	PSI

GLAND EXHAUST COND CONDITIONS

FW INLET PRESS	93.3600	PSIA
FW FLOW	366,788.8065	LBS/HR
FW INLET TEMP	118.8832	FAHR
FW INLET ENTH	87.0860	BTU/LBM
*TUBESIDE DP	10.0000	PSI
FW OUTLET PRESS	83.3600	PSIA
FW OUTLET TEMP	122.2805	FAHR
FW OUTLET ENTH	90.4519	BTU/LBM
*GE COND SHELL PRESS	15.7000	PSIA
DRAIN TEMP	215.3511	FAHR
DRAIN ENTH	183.5427	BTU/LBM
DRAIN FLOW	980.0000	LBS/HR
HEAT TRANSFER	1.2346	MMBTU/HR
*PRESS DROP TO LP HTR #1	5.0000	PSI

LP HTR #1 CONDITIONS

FW INLET PRESS	78.3600	PSIA
FW FLOW	366,788.8065	LBS/HR
FW INLET TEMP	122.2933	FAHR
FW INLET ENTH	90.4519	BTU/LBM
*TUBESIDE DP	10.0000	PSI
*DRAIN APPROACH TEMP	10.0000	FAHR
*FW APPROACH TEMP	5.0000	FAHR
FW OUTLET PRESS	68.3600	PSIA
FW OUTLET TEMP	161.9149	FAHR
FW OUTLET ENTH	130.0274	BTU/LBM
*PRESS DROP IN EXT LINE	7.0000	%
EXT FLOW TO HTR	14,485.3795	LBS/HR
HEATER SHELL PRESS	5.5800	PSIA
HEATER DRAIN TEMP	132.2933	FAHR
HEATER DRAIN ENTH	100.2550	BTU/LBM
HEATER DRAIN FLOW	36,196.5764	LBS/HR
HEAT TRANSFER	14.5158	MMBTU/HR
*PRESS DROP TO LP HTR #2	5.0000	PSI

LP HTR #2 CONDITIONS

FW INLET PRESS	63.3600	PSIA
FW FLOW	366,788.8065	LBS/HR
FW INLET TEMP	161.9269	FAHR
FW INLET ENTH	130.0274	BTU/LBM
*TUBESIDE DP	10.0000	PSI

*DRAIN APPROACH TEMP	10.0000	FAHR
*FW APPROACH TEMP	5.0000	FAHR
FW OUTLET PRESS	53.3600	PSIA
FW OUTLET TEMP	219.1239	FAHR
FW OUTLET ENTH	187.4274	BTU/LBM
*PRESS DROP IN EXT LINE	7.0000	%
EXT FLOW TO HTR	21,711.1969	LBS/HR
HEATER SHELL PRESS	18.6000	PSIA
HEATER DRAIN TEMP	171.9269	FAHR
HEATER DRAIN ENTH	139.9341	BTU/LBM
HEATER DRAIN FLOW	21,711.1969	LBS/HR
HEAT TRANSFER	21.0537	MMBTU/HR
*PRESS DROP TO DA	5.0000	PSI

DA CONDITIONS

*PRESS DROP IN EXT LINE	7.0000	%
EXT FLOW TO DA	23,560.8478	LBS/HR
DA SHELL PRESS	48.3600	PSIA
*DA VENT FLOW	500.0000	LBS/HR
DA VENT TEMP	278.9205	FAHR
DA VENT ENTH	1,173.4462	BTU/LBM

BOILER FEED PUMP CONDITIONS

FW FLOW	462,398.2285	LBS/HR
FW INLET TEMP	278.9205	FAHR
FW INLET ENTH	248.0670	BTU/LBM
FW INLET ENTR	0.4083	BTU/LBMR
BFP OUTLET PRESS	1,715.0000	PSIA
*BFP EFF	80.0000	%
BFP OUTLET TEMP	282.2327	FAHR
BFP OUTLET ENTH	254.6999	BTU/LBM
BFP ENTH RISE	6.6330	BTU/LBM
BFP HORSEPOWER	1,205.4037	HP
*PRESS DROP TO HP HTR #1	5.0000	PSI

HP HTR #1 CONDITIONS

FW INLET PRESS	1,710.0000	PSIA
FW FLOW	462,398.2285	LBS/HR
FW INLET TEMP	282.2424	FAHR
FW INLET ENTH	254.6999	BTU/LBM
*TUBESIDE DP	10.0000	PSI
*DRAIN APPROACH TEMP	10.0000	FAHR
*FW APPROACH TEMP	5.0000	FAHR
FW OUTLET PRESS	1,700.0000	PSIA
FW OUTLET TEMP	358.5304	FAHR
FW OUTLET ENTH	333.1086	BTU/LBM
*PRESS DROP IN EXT LINE	7.0000	%
EXT FLOW TO HTR	33,350.3127	LBS/HR
HEATER SHELL PRESS	159.9600	PSIA
HEATER DRAIN TEMP	292.2424	FAHR
HEATER DRAIN ENTH	261.9187	BTU/LBM
HEATER DRAIN FLOW	72,548.5742	LBS/HR
HEAT TRANSFER	36.2560	MMBTU/HR

*PRESS DROP TO HP HTR #2	5.0000	PSI

HP HTR #2 CONDITIONS

FW INLET PRESS	1,695.0000	PSIA
FW FLOW	462,398.2285	LBS/HR
FW INLET TEMP	358.5378	FAHR
FW INLET ENTH	333.1086	BTU/LBM
*TUBESIDE DP	10.0000	PSI
*DRAIN APPROACH TEMP	10.0000	FAHR
*FW APPROACH TEMP	0.0000	FAHR
FW OUTLET PRESS	1,685.0000	PSIA
FW OUTLET TEMP	437.0729	FAHR
FW OUTLET ENTH	416.7820	BTU/LBM
*PRESS DROP IN EXT LINE	7.0000	%
EXT FLOW TO HTR	39,198.2615	LBS/HR
HEATER SHELL PRESS	370.1400	PSIA
HEATER DRAIN TEMP	368.5378	FAHR
HEATER DRAIN ENTH	341.6399	BTU/LBM
HEATER DRAIN FLOW	39,198.2615	LBS/HR
HEAT TRANSFER	38.6904	MMBTU/HR
*PRESS DROP TO BOILER	5.0000	PSI

CYCLE CONDITIONS

TOTAL TURBINE MECH OUTPUT	54,936.1646	KW
*TURBINE MECH LOSSES	700.0000	KW
NET TURBINE MECH OUTPUT	54,236.1646	KW
*GENERATOR EFF	97.0000	%
GENERATOR GROSS OUTPUT	52,609.0796	KW
*HOUSELOAD	10.0000	%
NET ELECTRICAL OUTPUT	47,348.1717	KW
PROC HEAT REMOVED FROM THE CYCLE	0.0000	BTU/HR
STEAM CYCLE NET HEAT RATE	11,630.8609	BTU/KWHR
STEAM CYCLE THERMAL EFF	29.3443	%

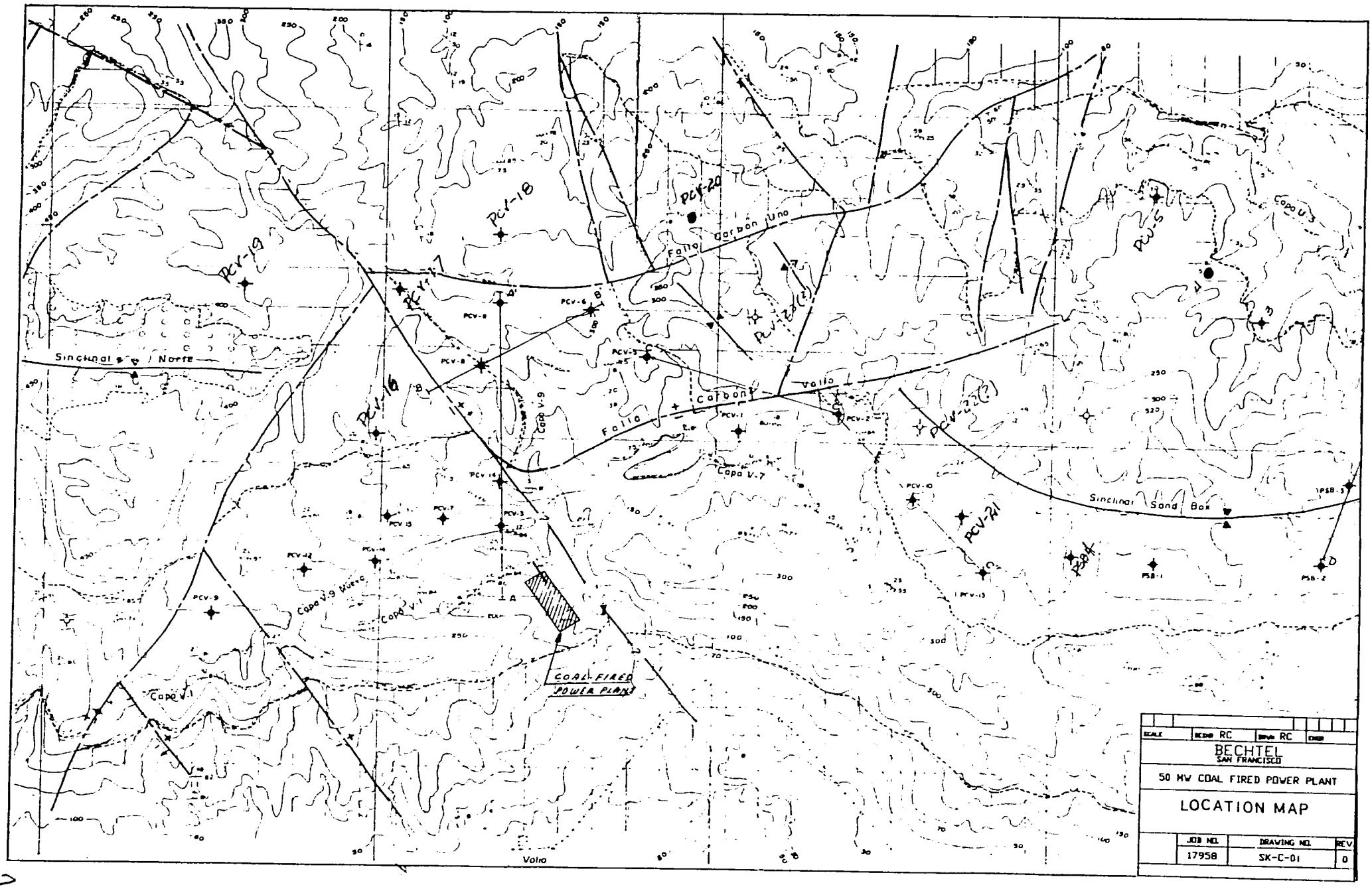
Sinclinal Norte
Falla Carbon Uno
Falla Carbon Volio
Sinclinal Sand Box
Capa V.9
Capa V.7
Capa V.9 Nuevo
Capa V.1
Capa U.3
PCV-19
PCV-18
PCV-20
PCV-16
PCV-21
PCV-22(?)
PCV-6
PCV-8
PCV-5
PCV-1
PCV-2
PCV-10
PCV-13
PCV-14
PCV-15
PCV-12
PCV-9
PCV-3
PSB-1
PSB-2
PSB-3
PSB-4
COAL FIRED POWER PLANT
Volio
SCALE
DESIGN RC
DRAWN RC
CHKD
BECHTEL
SAN FRANCISCO
50 MW COAL FIRED POWER PLANT
LOCATION MAP
JOB NO. 17958
DRAWING NO. SK-C-01
REV. 0

Legend

1 Turbine-Generator Module
2 Boiler Module
3 Baghouse
4 Cotrol Complex Module
5 Stack
6 Fly Ash Silo
7 Administration Building
8 Coal Conveyor to Boiler House
9 Crusher House
10 Coal Conveyor
(Live Storage to Crusher House)
11 Live Storage Silos
12 Emergency Storage Pile
13 15 Day Dead Storage
14 Emergency Reclaim Conveyor
15 Coal Conveyor From Mine
16 Cooling Tower
17 Condensate Storage Tank
18 Main Transformer
19 Auxiliary Transformer
20 Water Treatment Plant
21 No.2 Fuel Oil Storage
22 Waste Water Collection Pond
23 Raw Water Pond
24 Switch Yard
25 Bottom Ash Collection Area

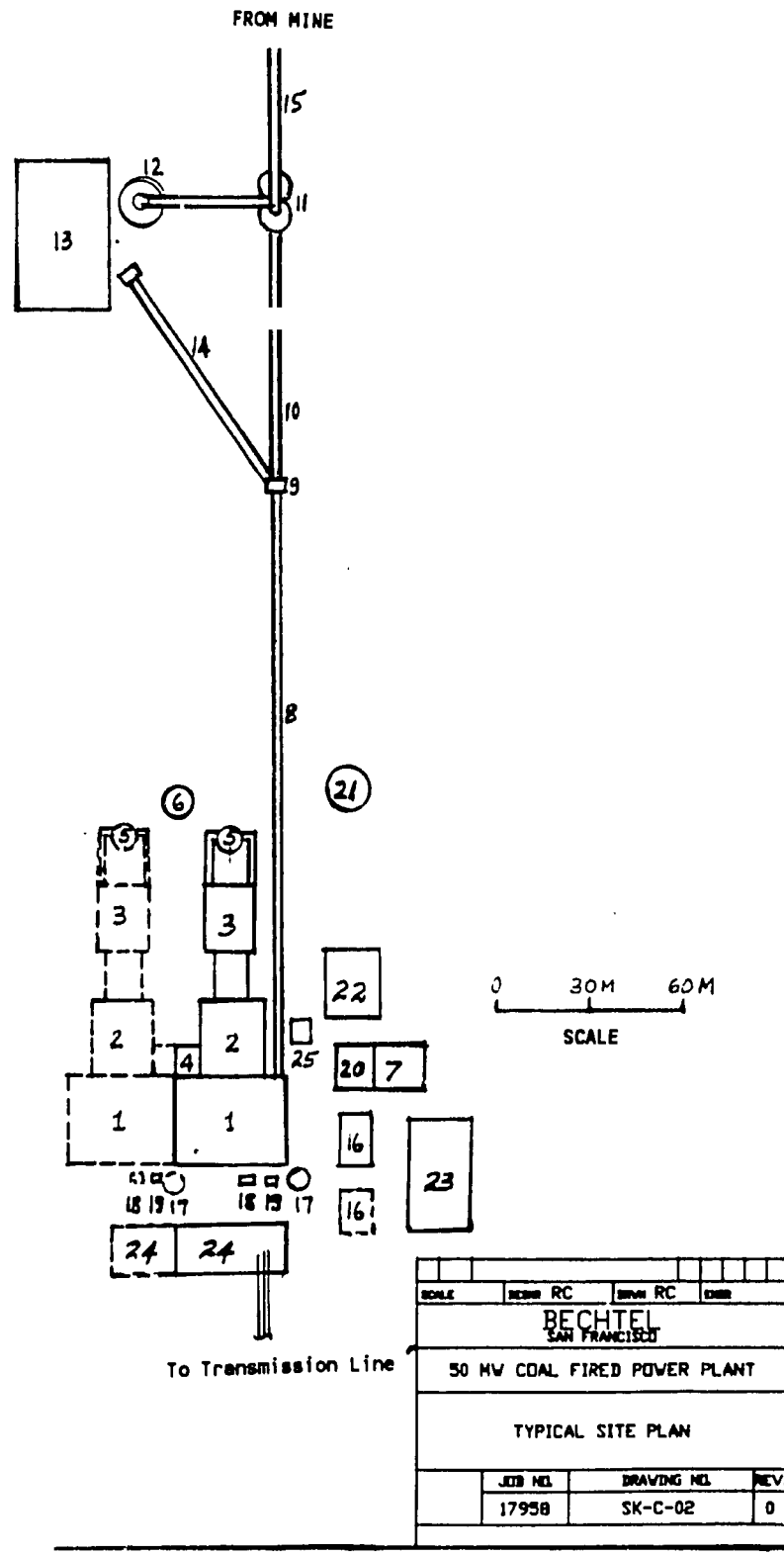

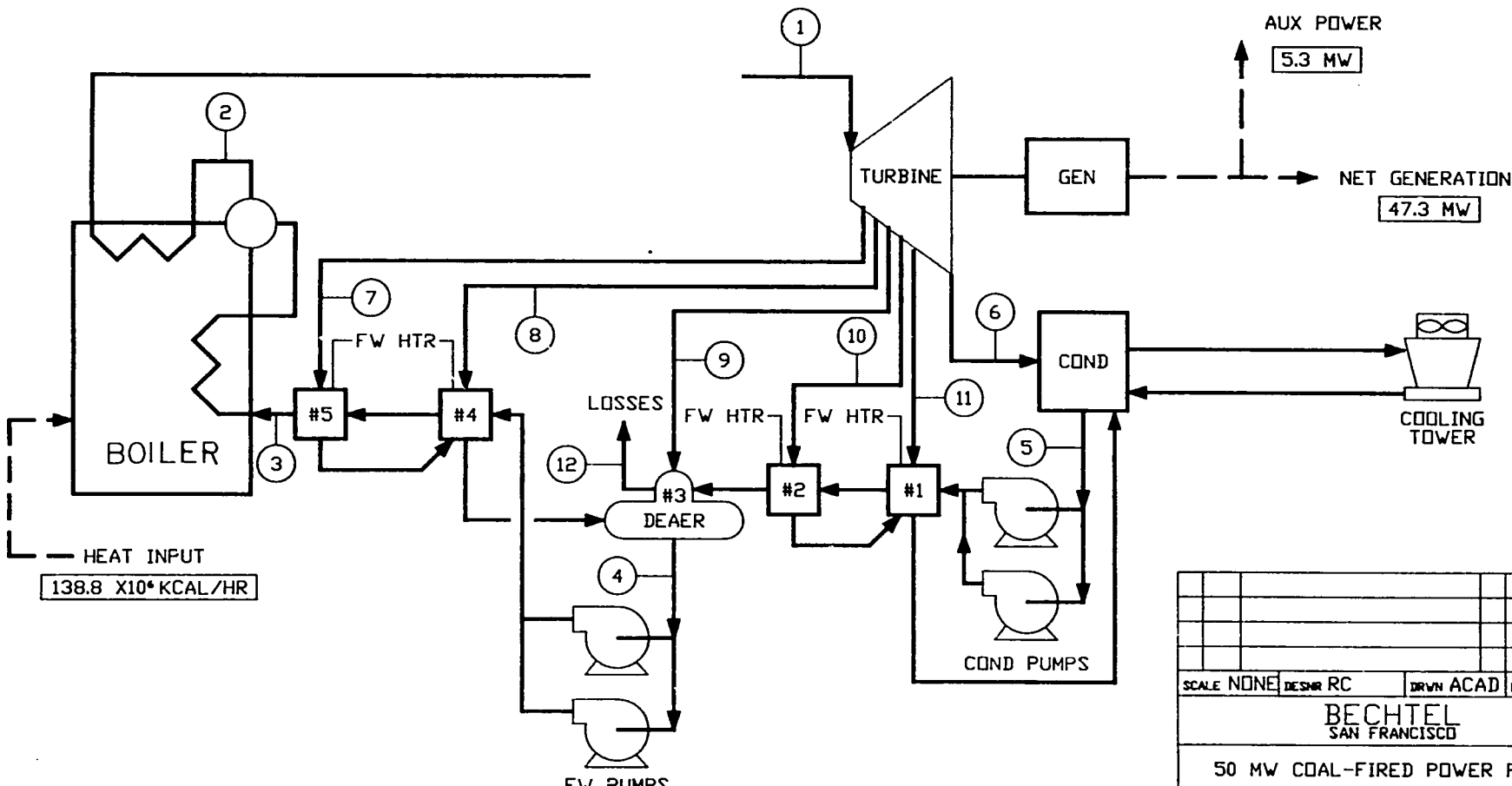

LINE NUMBERS	1	2	3	4	5	6	7	8	9	10	11	12
FLOW - X10³ KG/HR	207.7	207.7	209.7	209.7	166.4	146.7	17.8	15.1	10.7	9.8	6.6	0.5
PRESSURE - KG/SQCM A	103.0	116.0	118.1	3.4	0.1	0.1	26.0	11.2	3.4	1.3	0.4	3.4
TEMP - C	510.0	320.6	225.0	137.2	48.4	49.2	336.0	243.0	139.7	108.9	76.7	137.2

SCALE NONE | DESNR RC | DRWN ACAD | ENGR

BECHTEL
SAN FRANCISCO

50 MW COAL-FIRED POWER PLANT

HEAT BALANCE DIAGRAM

JOB NO.	DRAWING NO.	REV.
17958	SK-M-01	0

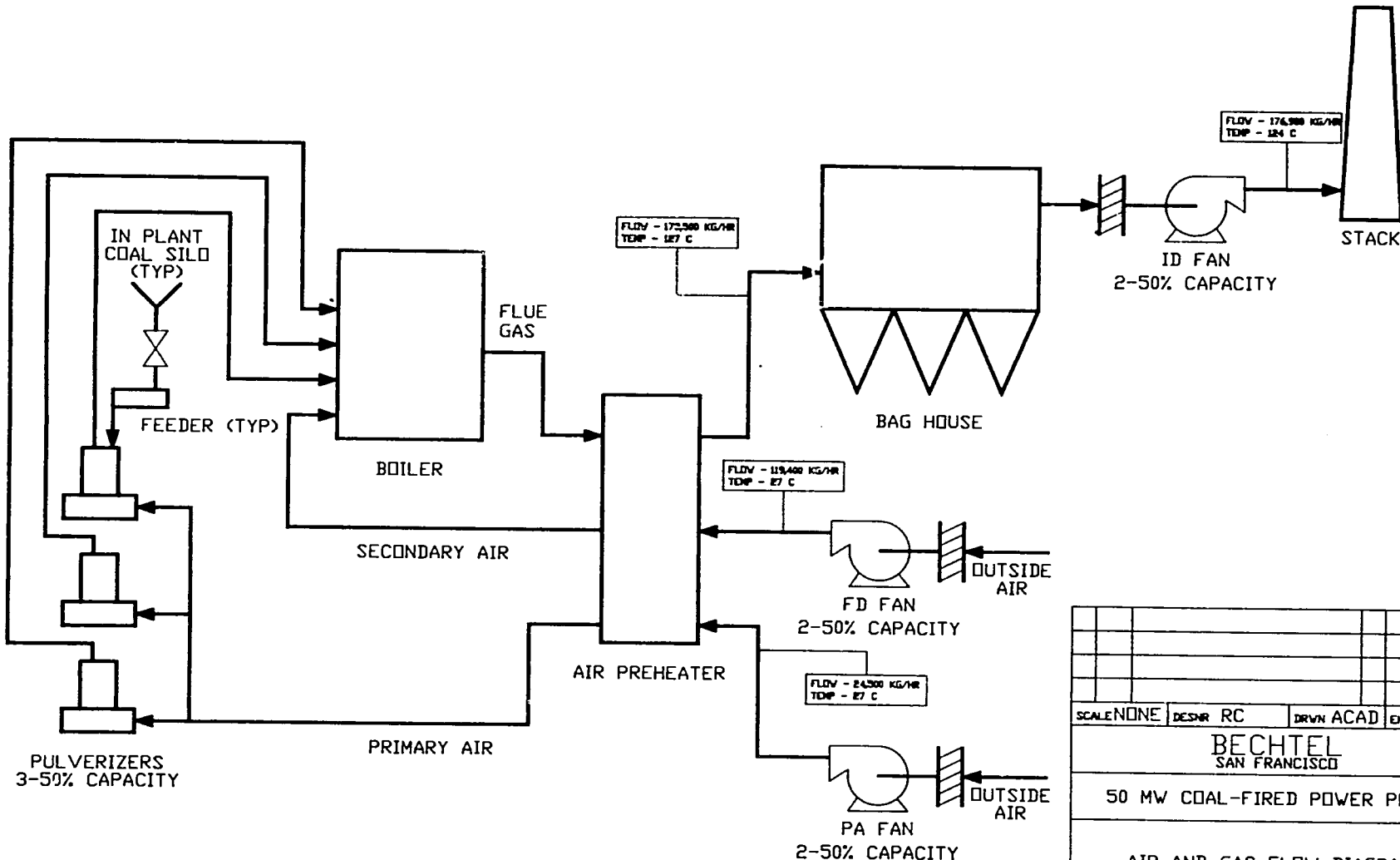

SCALE NONE	DESNR RC	DRWN ACAD	ENGR

BECHTEL
SAN FRANCISCO

50 MW COAL-FIRED POWER PLANT

AIR AND GAS FLOW DIAGRAM

JOB NO.	DRAWING NO.	REV.
17958	SK-M-02	0

E-10

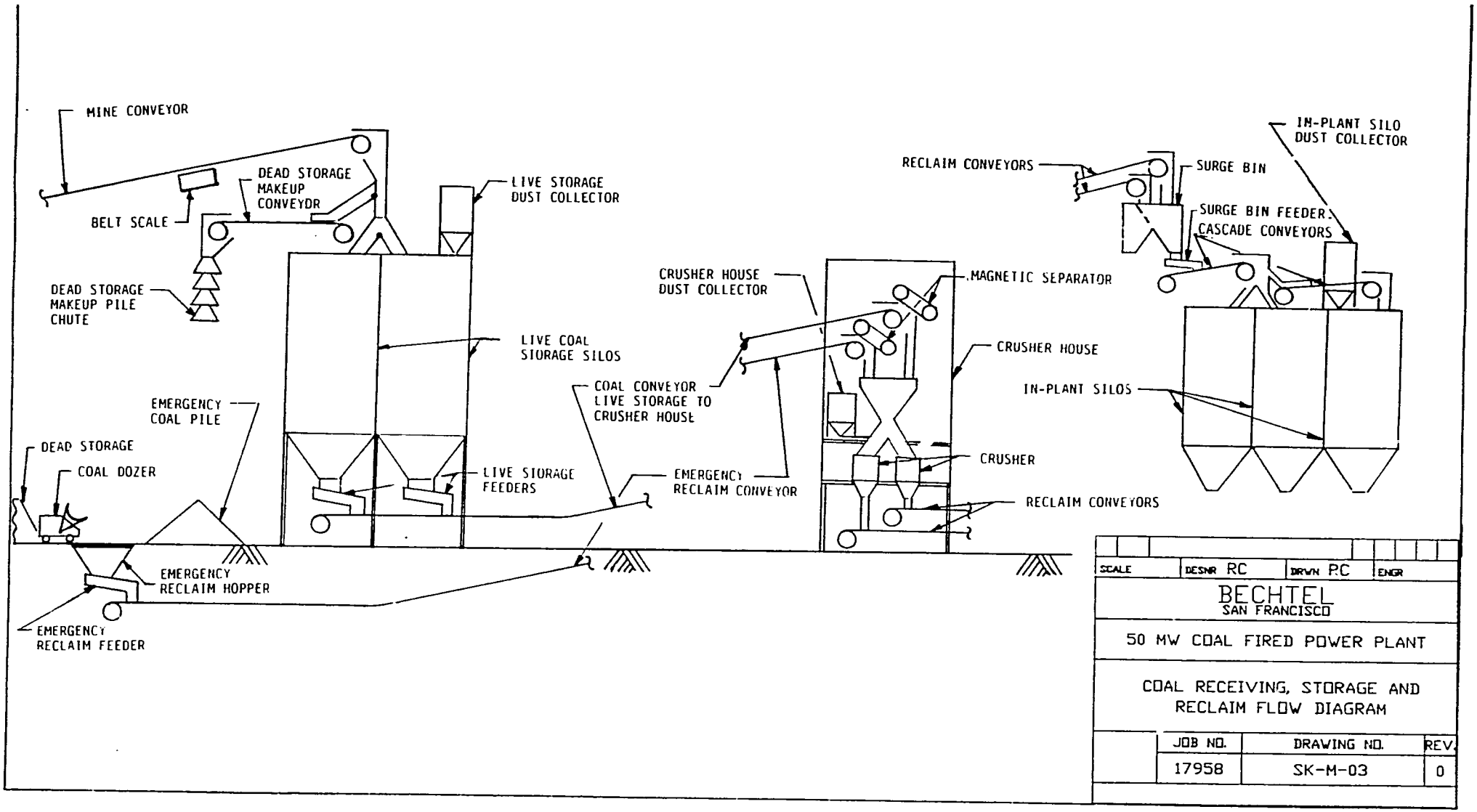
MINE CONVEYOR
BELT SCALE
DEAD STORAGE MAKEUP CONVEYOR
DEAD STORAGE MAKEUP PILE CHUTE
LIVE STORAGE DUST COLLECTOR
LIVE COAL STORAGE SILOS
EMERGENCY COAL PILE
DEAD STORAGE
COAL DOZER
LIVE STORAGE FEEDERS
EMERGENCY RECLAIM HOPPER
EMERGENCY RECLAIM FEEDER
COAL CONVEYOR LIVE STORAGE TO CRUSHER HOUSE
EMERGENCY RECLAIM CONVEYOR
CRUSHER HOUSE DUST COLLECTOR
MAGNETIC SEPARATOR
CRUSHER HOUSE
CRUSHER
RECLAIM CONVEYORS
RECLAIM CONVEYORS
SURGE BIN
SURGE BIN FEEDER CASCADE CONVEYORS
IN-PLANT SILO DUST COLLECTOR
IN-PLANT SILOS
SCALE
DESNR RC
DRWN P.C
ENGR
BECHTEL
SAN FRANCISCO
50 MW COAL FIRED POWER PLANT
COAL RECEIVING, STORAGE AND RECLAIM FLOW DIAGRAM
JOB NO.
DRAWING NO.
REV.
17958
SK-M-03
0

E-11

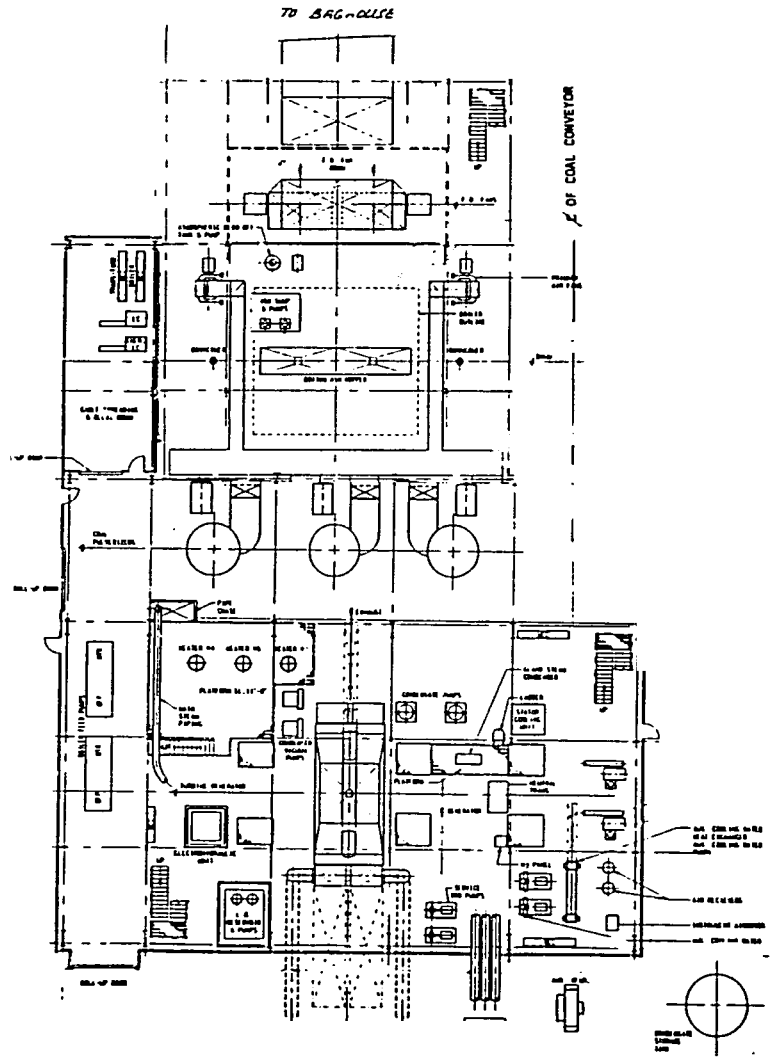

0 3M 6M 9M 12M 15M

SCALE

SCALE	DESNR RC	DRWN RC	ENGR

BECHTEL
SAN FRANCISCO

50 MW COAL FIRED POWER PLANT

TURBINE-GENERATOR AND BOILER
GROUND FLOOR PLAN

JOB NO.	DRAWING NO.	REV.
17958	SK- M-04	0

E-12

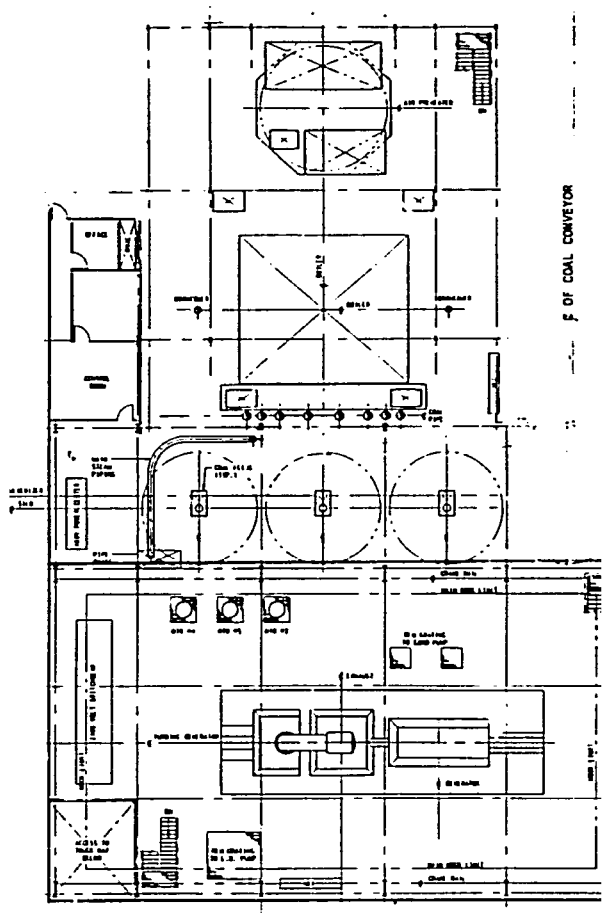

PLAN - EL. 7'-3"

SCALE	DESNR RC	DRWN RC	ENGR

BECHTEL
SAN FRANCISCO

50 MW COAL FIRED POWER PLANT

TURBINE-GENERATOR AND BOILER
OPERATING FLOOR PLAN

JOB NO.	DRAWING NO.	REV.
17958	SK- M-05	0

E-13

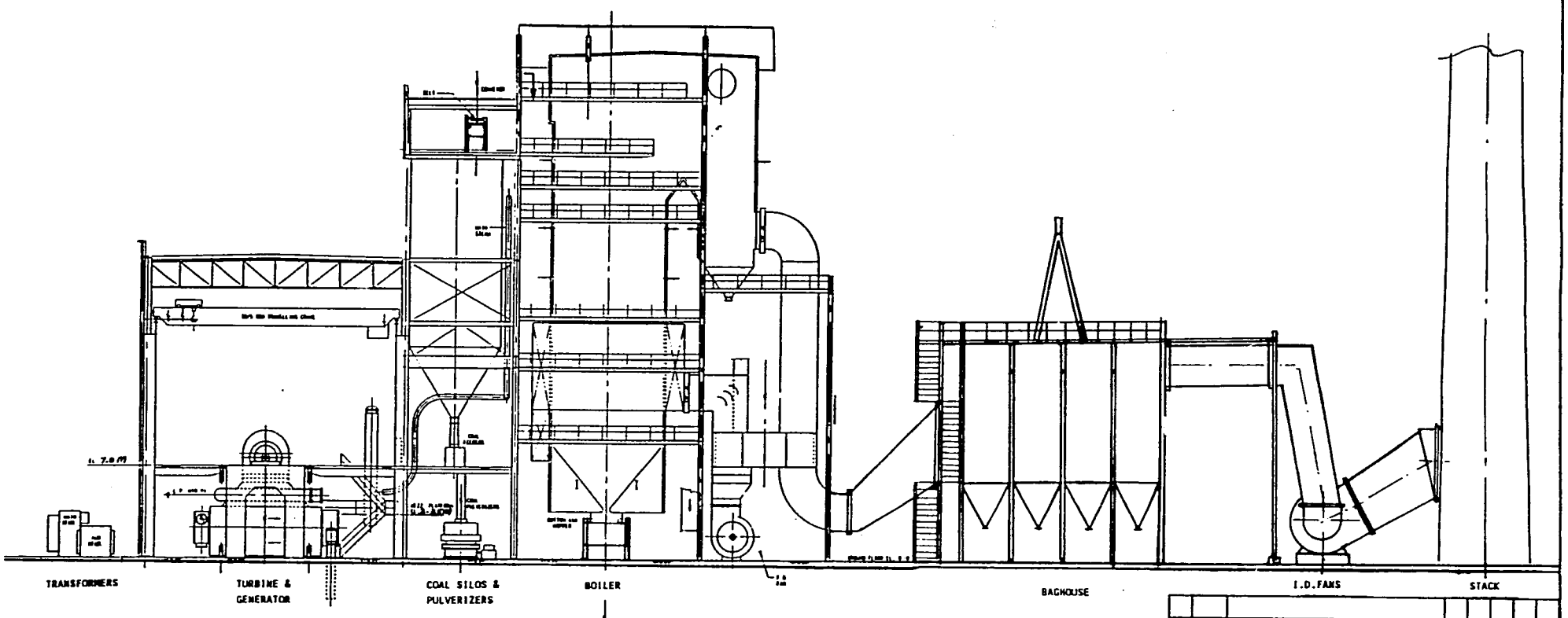

0 3M 6M 9M 12M 15M

SCALE

SCALE	DESNR RC	DRWN RC	ENGR

BECHTEL
SAN FRANCISCO

50 MW COAL FIRED POWER PLANT

POWER PLANT CROSS SECTION

JOB NO.	DRAWING NO.	REV.
17958	SK-M-06	0

E-14

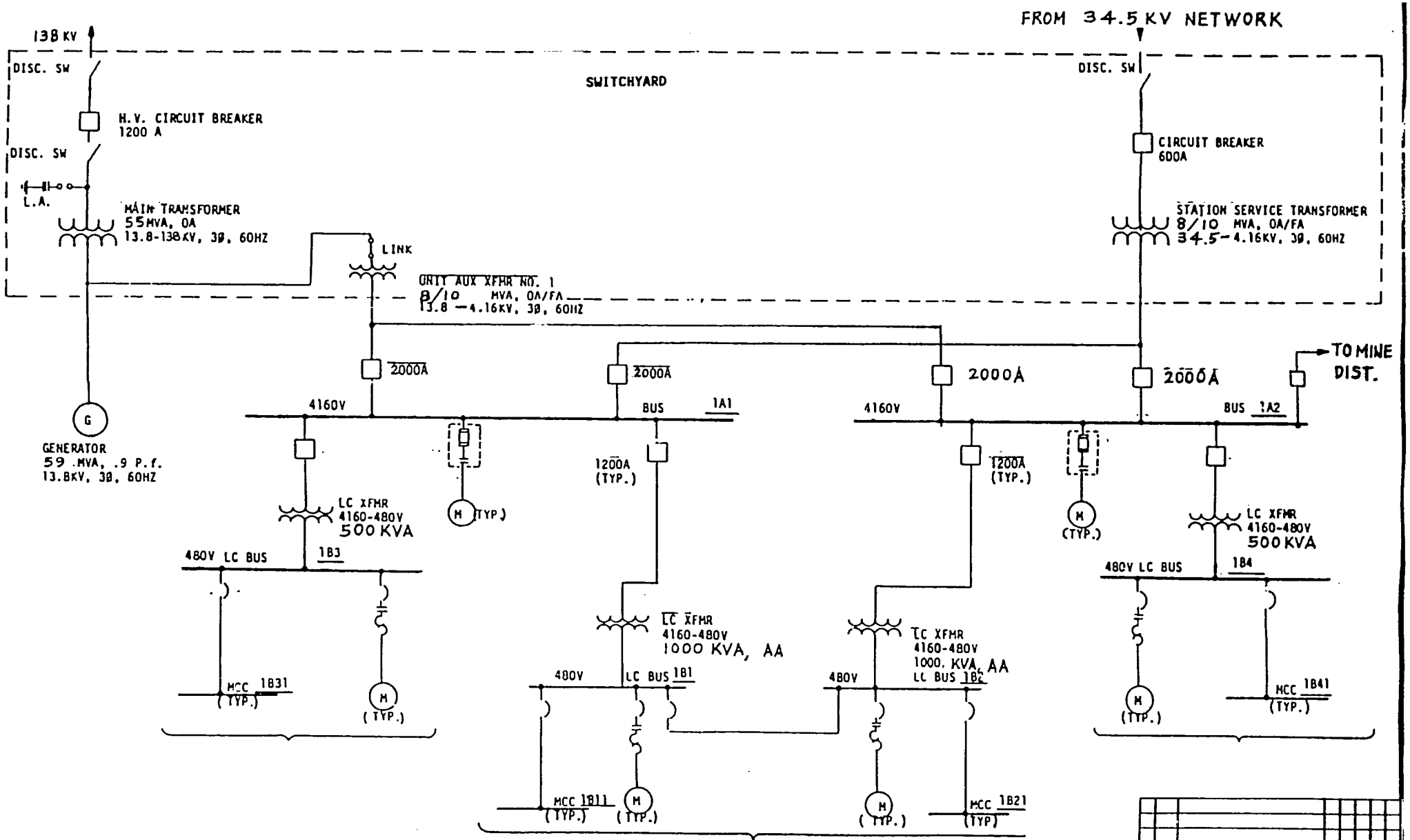
FROM 34.5 KV NETWORK
138 KV
SWITCHYARD
DISC. SW
H.V. CIRCUIT BREAKER
1200 A
DISC. SW
L.A.
MAIN TRANSFORMER
55 MVA, OA
13.8-138 KV, 3Ø, 60HZ
LINK
UNIT AUX XFMR NO. 1
8/10 MVA, OA/FA
13.8 -4.16KV, 3Ø, 60HZ
DISC. SW
CIRCUIT BREAKER
600A
STATION SERVICE TRANSFORMER
8/10 MVA, OA/FA
34.5-4.16KV, 3Ø, 60HZ
TO MINE DIST.
2000A
2000A
2000A
2000A
4160V
BUS 1A1
4160V
BUS 1A2
G
GENERATOR
59 MVA, .9 P.f.
13.8KV, 3Ø, 60HZ
1200A (TYP.)
1200A (TYP.)
M (TYP.)
M (TYP.)
LC XFMR
4160-480V
500 KVA
LC XFMR
4160-480V
500 KVA
480V LC BUS
1B3
480V LC BUS
1B4
LC XFMR
4160-480V
1000 KVA, AA
LC XFMR
4160-480V
1000 KVA, AA
480V
LC BUS 1B1
480V
LC BUS 1B2
MCC 1B31 (TYP.)
M (TYP.)
MCC 1B11 (TYP.)
M (TYP.)
M (TYP.)
MCC 1B21 (TYP)
M (TYP.)
MCC 1B41 (TYP.)
SCALE
DRAWN RC
CHKD RC
DWGR
BECHTEL
SAN FRANCISCO
50 MW COAL FIRED POWER PLANT
ELECTRICAL SINGLE LINE DIAGRAM
JOB NO. 17958
DRAWING NO. SK-E-01
REV 0