PD-AAU-783
48186
Project # 649-0122

EFFICIENT COOKSTOVE DEVELOPMENT IN SOMALIA:

A PROGRESS REPORT

By

Gautam S. Dutt
Mohamed Hassan

Published by

Volunteers in Technical Assistance
1815 North Lynn Street, Suite 200
P.O. Box 12438
Arlington, Virginia 22209-8438

July 1984

CONTENTS

LIST OF ILLUSTRATIONS ii

LIST OF TABLES iii

I. INTRODUCTION 1

II. WOOD-BURNING STOVES 2

Background 2
Indications of Relative Performance 4
Prototype Development 13
Stove Production Capability 19
Ceramic Cookstoves 19
Metal Cookstoves 19
Soapstone Cookstoves 22
Field Tests and Extension 22

III. CHARCOAL STOVES 23

Background 23
Indications of Relative Performance 27
Prototype Development 28
Stove Production Capability 34
Soapstone Cookstoves 34
Field Testing and Extension 35

IV. PRINCIPAL FINDINGS AND RECOMMENDATIONS 36

Wood Stoves 36
Metal Wood Stoves 36
Ceramic Wood Stoves 37
Soapstone Wood Stoves 38
Charcoal Stoves 39

APPENDIX A: Interpreting the Results of Water Boiling Tests Carried Out Using the 1982 Provisional International Standards

APPENDIX B: Memorandum to Hank Cauley, December 24, 1983

APPENDIX C: Household Selection for Kitchen Performance Test in Lower Shabeelle (Non-refugee)

APPENDIX D: Forms

REFERENCES

GLOSSARY

ILLUSTRATIONS

Figure 1 Short Cylindrical Metal Stove (SCM) - Taleh Stove

Figure 2 Non-template Ceramic Stove with Ceramic Grate (NTCG)

Figure 3 Traditional Ceramic Stove, Lower Shabeelle (TCLS)

Figure 4 Template Ceramic Special Stove (TCS) - Jima Stove

Figure 5 Template Ceramic Stove with Metal Grate (TCM) - Shabeelle Stove

Figure 6 Soapstone Insert for SCM Stove

Figure 7 Daallo Stove (Double-Walled)

Figure 8 All-Soapstone Wood Stove with Built-in Soapstone Grate (SSW)

Figure 9 Soapstone Wood Stove with Metal Grate (SSWMG)

Figure 10 Traditional Soapstone Stoves (TSS) (TSL)

Figure 11 "Kerocan" Kerosene Can Charcoal Stove

Figure 12 One-Piece Soapstone Charcoal Stove (1PSS)

Figure 13 Two-Piece Soapstone Charcoal Stove (2PSS)

TABLES

Table I Wood Stoves: Summary of Water Boiling Test Data

Table II Ranking of Wood Stoves by High-Power Performance

Table III Wood Stoves Ranked by their High and Low-Power Performance

Table IV Charcoal Stoves: Summary of Water Boiling Test Data

I. INTRODUCTION

This report summarizes the status of energy-efficient wood and charcoal cookstove development in Somalia and describes the activities that were carried out during the visit of Gautam Dutt to Somalia in December 1983. Although work on efficient cookstoves in Somalia has been going on for two years, this report does not intend to cover this development in depth. The reader is referred to earlier reports and memoranda which describe past efforts in detail (see list of references).

The activities described in this report were carried out largely by Mohamed Hassan, Dahir Kalombi, Hank Cauley, and the author with substantial help from other members of the VITA Somalia staff. They share the credit for the activities described herein.

The report is divided into two parts--one dealing with wood-burning cookstoves and the other with charcoal-burning cookstoves. There are also four appendixes which provide additional information on stove testing, evaluation, and the dissemination process.

Appendix A sets forth modified standards for the interpretation of Water Boiling Test data, based on our field experience in Somalia. These standards are believed to be an improvement on the 1982 VITA report on Provisional International Standards. We believe that our modifications are generally applicable to all Water Boiling Tests.

Appendix B is a copy of a memorandum to Hank Cauley outlining the procedure and benefits of a computerized analysis of Water Boiling Test (WBT) data using the VITA Somalia Apple IIe microcomputer.

Appendix C is based on a memorandum to Hank Cauley and discusses household selection for Kitchen Performance Tests (KPT) to evaluate actual fuel savings through the use of an improved ceramic cookstove. This series of tests is expected to be carried out in early 1984.

Several forms are presented in Appendix D. Forms 1 through 5 relate to Water Boiling Tests. Their use is described in Appendix A. Forms 6 and 7 are used for the collection of Kitchen Performance Test data.

Form 8 is a proposed stove scorecard which should be useful in comparing different stoves. Each scorecard contains information relevant to a particular stove. The information includes not only quantifiable data related to stove thermal performance but also qualitative data related to other

important stove characteristics. The purpose is to promote stove comparison not only on the basis of quantifiable factors but in terms of other features as well. Initially, all of the stove characteristics will be assessed by stove testers during Water Boiling Tests. Only stoves that are acceptable according to all the criteria should be field tested and promoted. As part of the field tests, users will be interviewed to get their opinion on the stove characteristics. The interview format and questionnaire can be adapted from earlier stove user surveys in Somalia, e.g., the Cali Mataan survey (VITA/Somalia, 1983). The results of these interviews, along with fuel consumption data obtained from Kitchen Performance Tests, will be tabulated in a similar scorecard called the "VITA Somalia Stovecard (Final)." Here, the word "final" is used in contrast to "preliminary" used for the data obtained from (laboratory) Water Boiling Tests.

II. WOOD-BURNING STOVES

Background

Wood is the major traditional cooking fuel in rural Somalia. It is also used by the poorer people in the towns. Consequently, fuelwood savings through improved stoves will be of special benefit to the Somali poor and deserves particular attention. On the other hand, wood is frequently collected rather than purchased, and the ability of fuelwood users to purchase stoves is limited. Where stoves are used they are ceramic and cost no more that 25-30 Somali Shillings. Information gathered from group meetings in Lower Shabeelle indicates that people are unwilling to pay more for a stove despite expected fuel savings. We do not know whether this attitude can be changed by clearly demonstrating fuel savings and other economic benefits. Nor do we know whether benefits such as stove durability would motivate people to purchase stoves of higher cost and higher fuel efficiency. Participants in the Lower Shabeelle group meetings indicated that they could not afford the more durable soapstone stoves because of their higher cost. Soapstone stoves are much more expensive than traditional ceramic stoves.

One focus of the improved wood-burning cookstove program has been to develop ceramic stoves comparable in cost to traditional designs. Prototypes of more expensive ceramic stoves as well as the much more expensive soapstone and metal stoves have also been built and tested. One purpose of this approach is to place stoves of varying cost, efficiency, and durability on the market to appeal to various income levels. Test marketing the various stoves will be necessary to determine their commercial viability. One of the major program objec-

tives is to develop traditional artisan skills and market structure to the maximum extent, and to avoid any subsidy except for overhead expenses in the program demonstration phase. In this way, it is hoped that only stoves capable of sustained commercial viability without external intervention will be developed.

Several mud stove designs with and without chimneys were developed and promoted earlier in the program. They were of relatively low cost but suffered quality control problems during construction and as a result required extensive supervision. Moreover, heavy rains destroyed almost 90 percent of one batch of stoves, most of which were not rebuilt. Expected lifetime of the mud stoves is only a few months. Their durability can be greatly improved by cement reinforcement, and this remains an option for the rural poor and refugee populations. However, as refugees move to permanent settlement, the more durable ceramic stoves may become more affordable.

Traditionally, Somali cooking with wood is done on three-stone fires or on ceramic stoves. In our Water Boiling Test program we used a three-stone setup and two of the traditional ceramic stoves. One of the ceramic stoves was contained inside a metal bucket which is presumably intended to increase its durability. At the time of the tests in December 1983, several wood-burning cookstove prototypes had been developed by VITA/Somalia for the National Woodstove Program (NWP). Most of the designs were of ceramic construction, and some were derived from ceramic stoves developed by the CILSS/VITA technical coordinator in Upper Volta. Two other ceramic stoves had been developed by Food for the Hungry International (FHI).

In addition to the ceramic stoves, a sheet metal wood-burning cookstove had also been built. Its design was based on the CILSS/VITA portable metal cookstove and only differed from it in that the Somali version is somewhat shorter to accommodate the shallower pots used there. This metal stove had a properly functioning grate, but many of the ceramic stoves had either no grate or one that was not properly located to permit air to reach the space below the grate.

A number of additional ceramic stove prototypes were built during this period. Several only differed from existing models by having a properly functioning grate. Some of the designs were also modified to permit the use of a **canjeero** pan--an almost flat cast iron plate used in the preparation of **canjeero,** a pancake-like food eaten for breakfast.

Other metal stove designs were developed and prototypes built. The earlier prototype was a single-wall stove that operated with a very high surface temperature (typically 200-

300° celsius) and therefore presented a serious hazard for burns. The modified designs included a double-wall metal stove, closer in design to the portable metal stoves developed by Howard Geller in Botswana (Geller, 1983). Apart from having a lower surface temperature, these newer models should also be more efficient. One of the newer prototypes can accommodate a wider range of pot sizes including the canjeero pan which was not possible with the earlier metal prototype.

In addition to the ceramic and metal designs, several soapstone cookstoves were also developed. Since soapstone is more durable than ceramic, this might be an alternative construction material.

Several wood-burning cookstove designs are illustrated in Figures 1 through 9.

Indications of Relative Performance

Water Boiling Tests were carried out on several of the traditional stoves as well as on prototypes built prior to December 1983. The test protocol closely followed that described in the Provisional International Standards (VITA, 1982). For some stoves, only one test was carried out; further testing was not considered worthwhile because of a design flaw that made the stove unsuitable. This included lengthy heating time, low efficiency, or some operating problem believed to be generic. Stoves showing some promise were tested at least three times to obtain reliable measures of their performance. In all cases, additional tests may be carried out if warranted. For instance, in comparing two stoves of similar performance, additional tests may be necessary to obtain a better estimate of their relative performance.

Many performance parameters can be determined from the Water Boiling Test data. These parameters and their interpretation are discussed in Appendix A. The two most useful parameters characterizing fuel economy that are derived from Water Boiling Tests are the percent heat utilized (PHU) and specific consumption (SC). Percent heat utilized is the sum of the sensible and latent heat gained by water expressed as a percentage of the chemical energy in the fuel used. Specific consumption is the weight of fuel used per unit weight of water remaining in the pan at the end of the test. The weight of wood is converted to equivalent dry weight using its measured moisture content. Since the charcoal left over from the wood is typically not recovered by Somali cooks, the energy content of this charcoal is not subtracted. This is called the gross specific consumption (GSC). The PHU and GSC are calculated separately for the high-power phase, the low-power phase, and the overall test. The results of the cook-

stove tests carried out between December 3 and December 21, 1983, are shown in Table I.

As noted in Appendix A, the high-power PHU and the low-power GSC are two of the six quantities that best characterize the stove's performance. They are listed in the middle two columns of Table I.

The number of tests for several of the stoves is too small to reach any definite conclusions about their relative performance. However, the data do provide certain general indications.

The short cylindrical metal (SCM) or **Taleh** stove adapted from the Upper Volta design demonstrated the best high-power performance. We believe this performance is due to two factors: (1) since the stove mass is small, the heat that would be used in heating a ceramic or other higher mass stove is saved during the start-up of the test; and (2) the firebox is especially large allowing for rapid heating of the water. Rapid heat delivery is typically associated with high performance at high power. For instance, one SCM test (number 2) shows an incredible 52.8 percent efficiency in the high-power phase. This was also the test in which water boiled in only eight minutes, in contrast to 14, 17, and 23 minutes for the other three tests.

Following the SCM, the best high-power performance appears to be in the small non-template ceramic stove (no grate) (NTCNGS) and the large non-template ceramic stove (no grate) (NTCNGL), and possibly the small Food for the Hungry International-designed ceramic stove (FHIS). The FHIS stove is quite awkward to use because of the small, high opening for firewood and because the air holes around the grate allow charcoal to fall out of the stove. Maintaining ignition requires almost constant attention, yet it is difficult to fan the flames because of the small firewood opening. We do not believe that the FHIS stove is suitable for extension. In contrast, the NTCNGL and NTCNGS stoves are relatively easy to operate and do not have these problems.

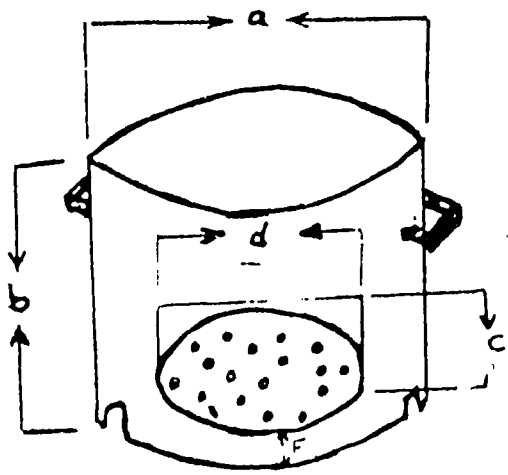

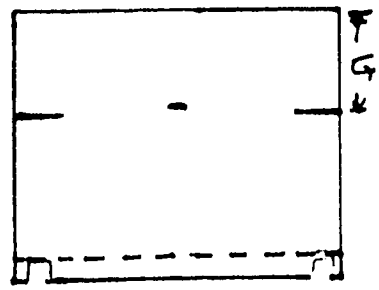

a = 29 cm
b = 21 cm
c = 11 cm
d = 15 cm
e = 7 cm
f = 3 cm
g = 6 cm

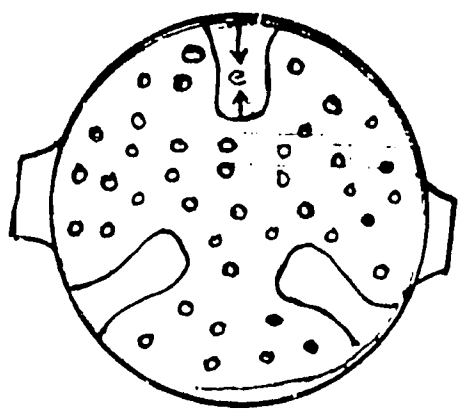

Figure 1

Short Cylindrical Metal Stove (SCM) - Taleh Stove

TABLE I

WOOD STOVES: SUMMARY OF WATER BOILING TEST DATA

Stove Type	Test Number	Gross Specific Consumption (GSC)			Percent Heat Utilized (PHU)		
		Overall	HP	LP	HP	LP	Overall
SCM	1	0.509	0.199	0.244	21.1	17.9	19.4
	2	0.496	0.140	0.302	52.8	17.4	27.5
	3	0.563	0.212	0.277	20.6	15.6	17.8
	4	0.863	0.272	0.409	24.7	18.9	21.4
TCS	2	0.410	0.189	0.188	14.0	13.4	13.7
	3	0.454	0.193	0.216	18.7	13.7	16.0
	4	0.432	0.212	0.177	18.7	17.0	18.0
NTCNGL	1	0.438	0.189	0.200	19.2	17.9	18.5
	2	0.484	0.205	0.211	23.7	21.0	22.3
	3	0.458	0.179	0.219	23.1	20.8	21.8
NTCNGS	1	0.538	0.215	0.264	21.7	15.0	18.1
	2	0.633	0.193	0.326	25.4	25.4	25.4
NTCG (ceramic)	1	0.491	0.278	0.190	10.5	7.9	9.4
NTCG (square metal)	1	0.708	0.226	0.419	10.7	9.1	9.7
3 ST	1	0.972	0.439	0.394	10.1	10.0	10.0
	2	0.922	0.383	0.424	12.7	10.9	11.7
TCLS	1	0.958	0.448	0.866	13.1	16.3	14.8
	2	0.928	0.303	0.466	13.7	17.3	15.6
CBS	1	0.979	0.307	0.503	17.4	15.3	16.2
FHIS	1	--	0.161	--	23.7	--	--
FHIL	1	0.975	0.264	0.505	14.5	22.2	18.6
	2	1.320	0.361	0.623	19.9	19.4	19.6
	3	--	0.322	--	13.4	--	--

The worst high-power phase performers appear to be the non-template ceramic stove (NTCG) and the three-stone fire (3ST), each with a PHU of around 10 percent, as well as the traditional ceramic stove (TCLS), with a PHU of about 13 percent. Although these findings are based on one or two tests and will need to be substantiated, the results appear reasonable at this stage.

The ceramic bucket stove (CBS), the large Food for the Hungry International-designed ceramic stove (FHIL), and the template ceramic special stove with a ceramic grate (TCS) performed in the middle range with high-power PHUs of between 16 and 18 percent.

Tentative high-power rankings are recorded in Table II below.

TABLE II

RANKING OF WOOD STOVES BY HIGH-POWER PERFORMANCE

Number of Tests	Stove	Level of Performance
4	SCM	HIGH PERFORMANCE
2	NTCNGS	
3	NTCNGL	
3	TCS	MID PERFORMANCE
3	FHIL	
1	CBS	
2	TCLS	LOW PERFORMANCE
2	3ST	
1	NTCG (using ceramic grate)	
1	NTCG (using table-top charcoal stove metal grate)	

In the low-power phase, we are seeking a stove that consumes very little fuel while keeping a pot simmering for an hour. (In our tests some of the fuel is used to bring the pot back to a boil following the high-power test, but this adds only a few minutes to the test and introduces a relatively minor error to the estimates.)

The ranking in the low-power tests is shown in Table III alongside the ranking in the high-power tests. The ranking of stoves for the low-power test differs substantially from the

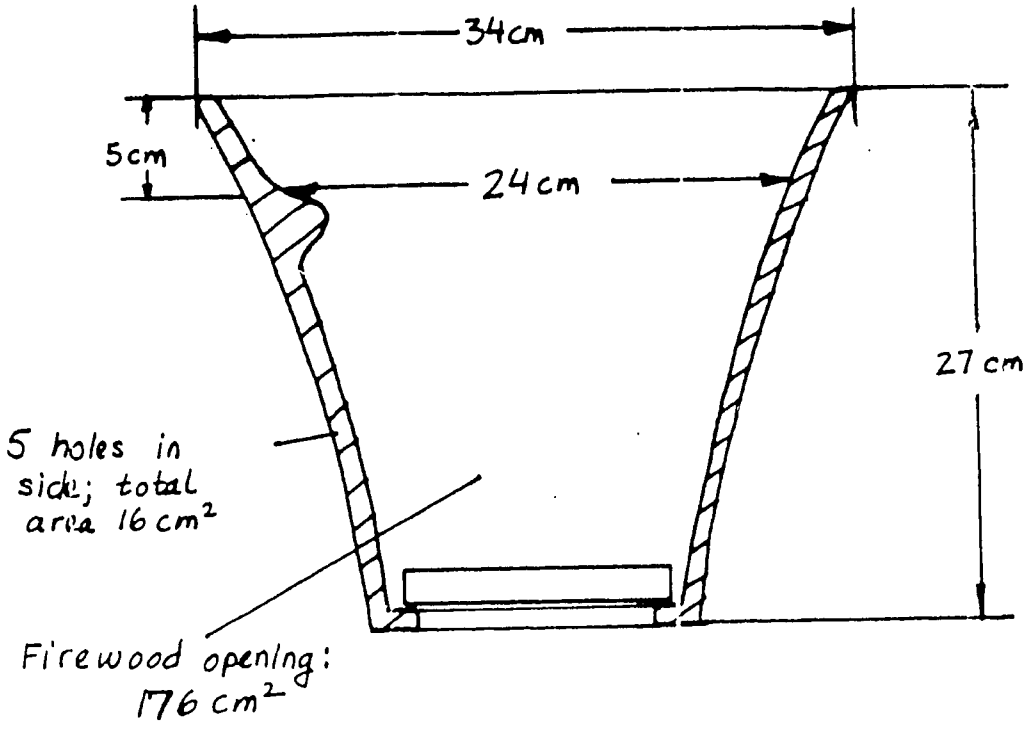

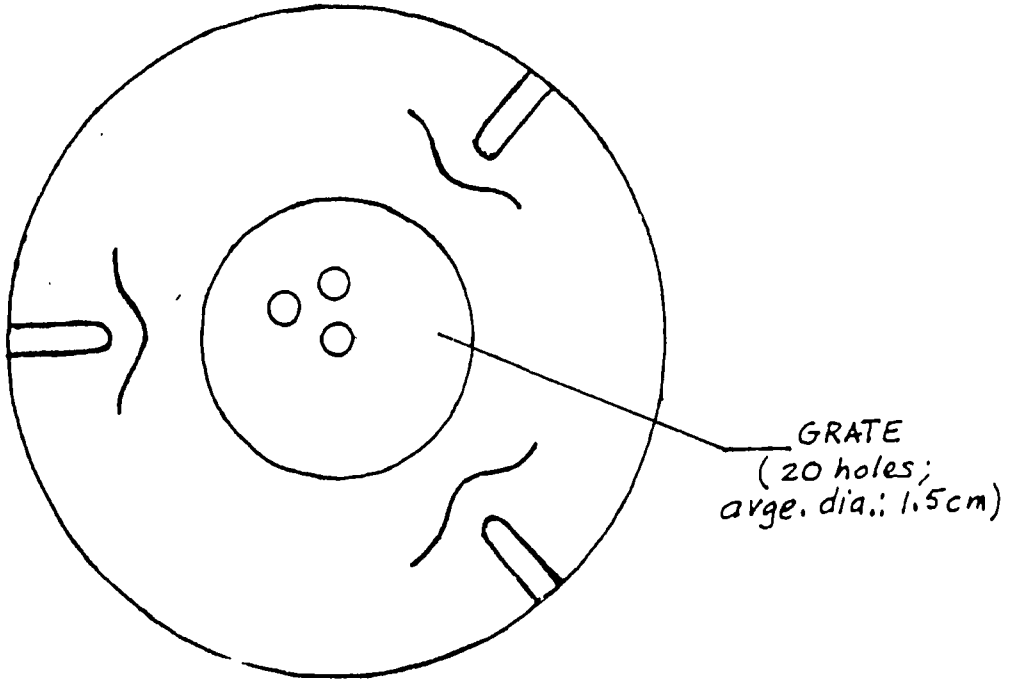

Figure 2

Non-template Ceramic Stove with Ceramic Grate (NTCG)

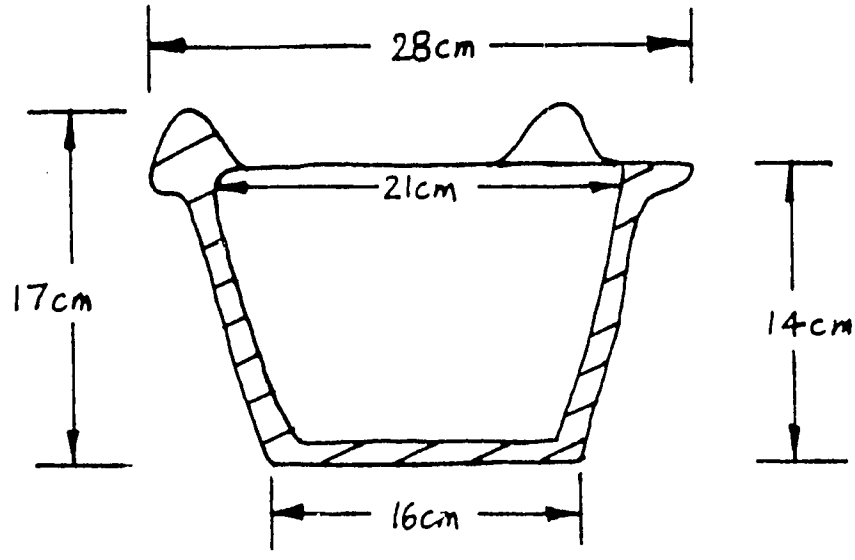

POT DIMENSIONS: Maximum: No Limits; Minimum: 15 centimeters

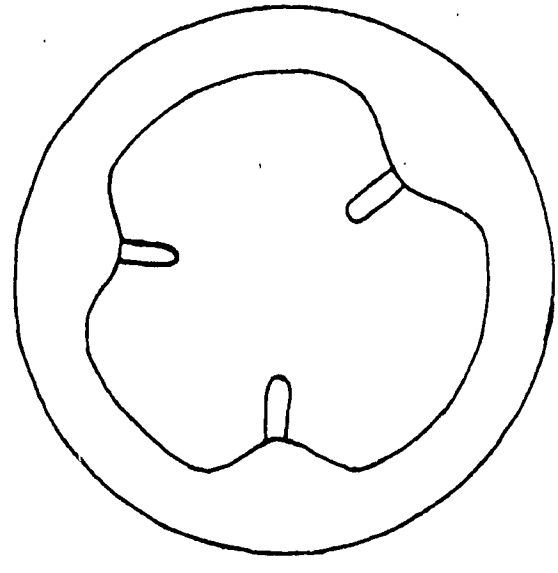

Figure 3

Traditional Ceramic Stove, Lower Shabeelle (TCLS)

high-power test ranking. The best stove in the low-power tests--the one with the lowest specific consumption--is the TCS, followed by NTCG (one test only), NTCNGL, NTCNGS, and SCM. The 3ST, TCLS, and CBS performed much worse than the above mentioned stoves. In one of the two TCLS tests, the specific consumption was as high as 0.866 compared to below 0.2 for the TCS.

Since the rankings are different, it is not possible to accurately compare the overall efficiency of the stoves from Water Boiling Tests alone. Efficiency must be defined in terms of specific cooking tasks so that the high-power and low-power phases are appropriately weighted. Once cooking patterns have been established, the same Water Boiling Test (WBT) data can be used to estimate fuel requirements for cooking with the various stoves (see Appendix A). The stoves should then be ranked according to their economy of fuel use for specific cooking tasks.

TABLE III

WOOD STOVES RANKED BY THEIR HIGH AND LOW-POWER PERFORMANCE

HP RANKING		RANK	LP RANKING	
Number of Tests	Stove		Stove	Number of Tests
4	SCM	1	TCS	3
2	NTCNGS	2	NTCG (ceramic)	1
3	NTCNGL	3	NTCNGL	3
3	TCS	4	NTCNGS	2
3	FHIL	5	SCM	4
1	CBS	6	3ST	2
2	TCLS	7	NTCG (metal)	1
2	3ST	8	CBS	1
1	NTCG (ceramic)	9	FHIL	2
1	NTCG (metal)	10	TCLS	2

In the absence of well-defined cooking patterns, crude methods must be used to compare the overall performance of stoves. One method is to use the sum of the rankings in the

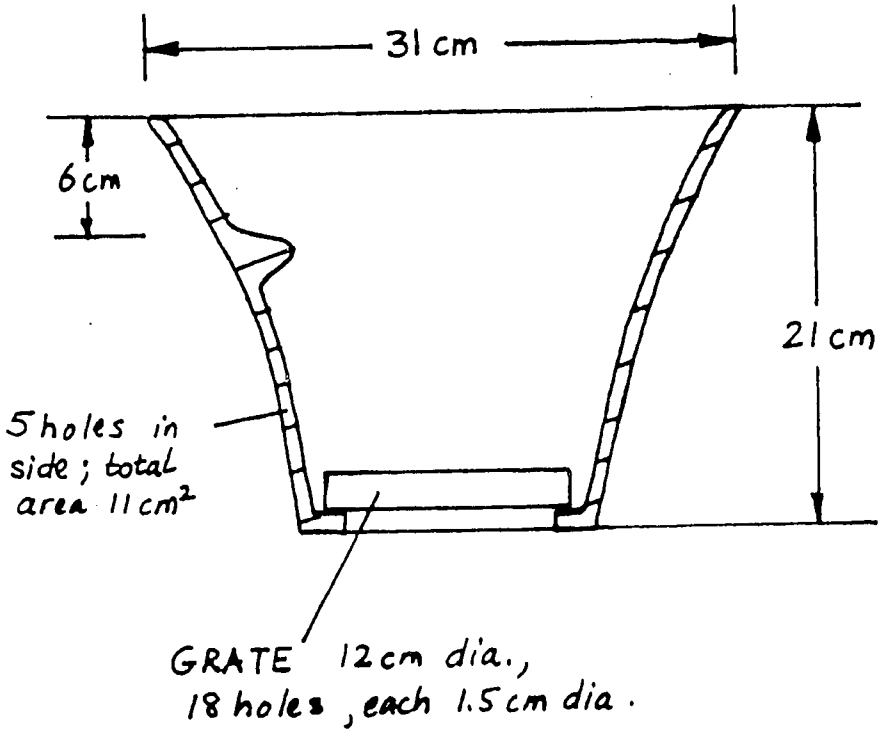

Figure 4

Template Ceramic Special Stove (TCS) - Jima Stove

two tests as an indicator of overall performance. The top four stoves are then: TCS (sum-of-ranks = 4), NTCNGS, NTCNGL, and SCM (each with a sum-of-ranks = 6). The three traditional stoves (CBS, 3ST, and TCLS) have the worst overall performance with sums of 14, 14, and 17, respectively. In the one test of NTCG using a square metal grate, the sum-of-ranks was also 17, but this stove was not considered to be a serious design prototype.

The stoves may also be compared according to their overall PHU and GSC values. The top four stoves according to the sum-of-ranks rating (TCS, NTCNGS, NTCNGL and SCM) have overall GSC values of around 0.5. The three worst stoves according to the sum-of-ranks (CBS, 3ST, and TCLS), have higher overall GSC values of about 1.0. The rankings according to the sum-of-ranks and the overall GSC correspond reasonably well. However, the agreement between the overall PHU and the sum-of-ranks ratings is not as good. For instance, the top-rated TCS stove according to both the sum-of-ranks and overall GSC criteria has an overall PHU averaging 15.9 percent which is comparable to that of the CBS and TCLS stoves.

Prototype Development

The test findings on fuel efficiency and other characteristics of stove use were used to design a number of new prototypes. In addition to ceramic and metal stoves, soapstone stove designs were developed. Some of the ceramic stoves and one of the soapstone stoves were designed to be operated with metal grates. Also, ceramic and soapstone inserts were designed to fit into the SCM stove to insulate its surfaces from high temperatures. Thus, a significant proportion of the new generation of prototypes utilized more than one material in their construction.

In addition to efficiency of fuel use, factors relevant in designing the new set of prototypes included:

(1) cost,

(2) expected ease of initial ignition and maintaining ignition,

(3) outside surface temperature of stove and potential risk of burns,

(4) appearance,

(5) durability,

(6) ability to accommodate a wide range of pot sizes, and

(7) ability to cook **canjeero** using a flat cast iron pan.

Not all of the stoves were ideal in all of these characteristics since compromises among them were necessary. For instance, to reduce pot heat loss and improve heat transfer from the flames and hot gases to the pot, the pot should be supported deep within the stove with only a small gap between it and the stove. However, this arrangement makes it difficult to use the flat **canjeero** pan which cannot be recessed due to its shape and the cook's need to work on the cooking surface without being burned. Consequently, the deep-pot ceramic and metal stoves developed in Upper Volta and Botswana cannot meet typical cooking needs in Somalia.

Of the stoves tested, the TCS can accommodate the **canjeero** pan but deeper pots cannot be recessed within the stove. Pots can be recessed to varying degrees with the NTCNGS, NTCNGL, and SCM but the **canjeero** pan cannot be used with these stove models. All of the traditional stoves (3ST, TCLS, and CBS) can be used with **canjeero** pans but pots can not be recessed.

Even without recessing the pots, two design features borrowed from stoves developed in Upper Volta can be utilized to improve fuel efficiency: (1) the use of a grate and (2) the placement of the grate at an optimum distance from the bottom of the pot. There are no air openings below the ceramic grates in the NTCG and TCS stoves. For this reason, they are not very effective in bringing air to the center of the burning wood. (The metal grate in the SCM works well in this regard.) NTCNGS and NTCNGL, as tested, do not have any grates.

Two of the new ceramic prototypes--the template ceramic stove with a metal grate (TCM) and the non-template ceramic stove with a metal grate (CGM)--are designed to utilize metal grates and have air holes in the ceramic walls below grate level to permit air entry. TCM has essentially the same dimensions as TCS except for the modifications necessary to accommodate the grate. CGM was intended to have the same dimensions as NTCNGS but the prototype actually built is smaller and cannot accommodate the same size pots as the earlier model. CGM also has a feature that permits the use of a **canjeero** pan while allowing deeper pots to be recessed. A part of the stove wall on one side is cut lower to leave room for the **canjeero** pan handle. A larger version of CGM should be built prior to testing. Another desirable feature of the modified CGM prototype is the provision of three ribs on the inside of the stove to support progressively larger pots. Otherwise, larger pots tend to close off the stove top entirely and prevent the escape of combustion gases.

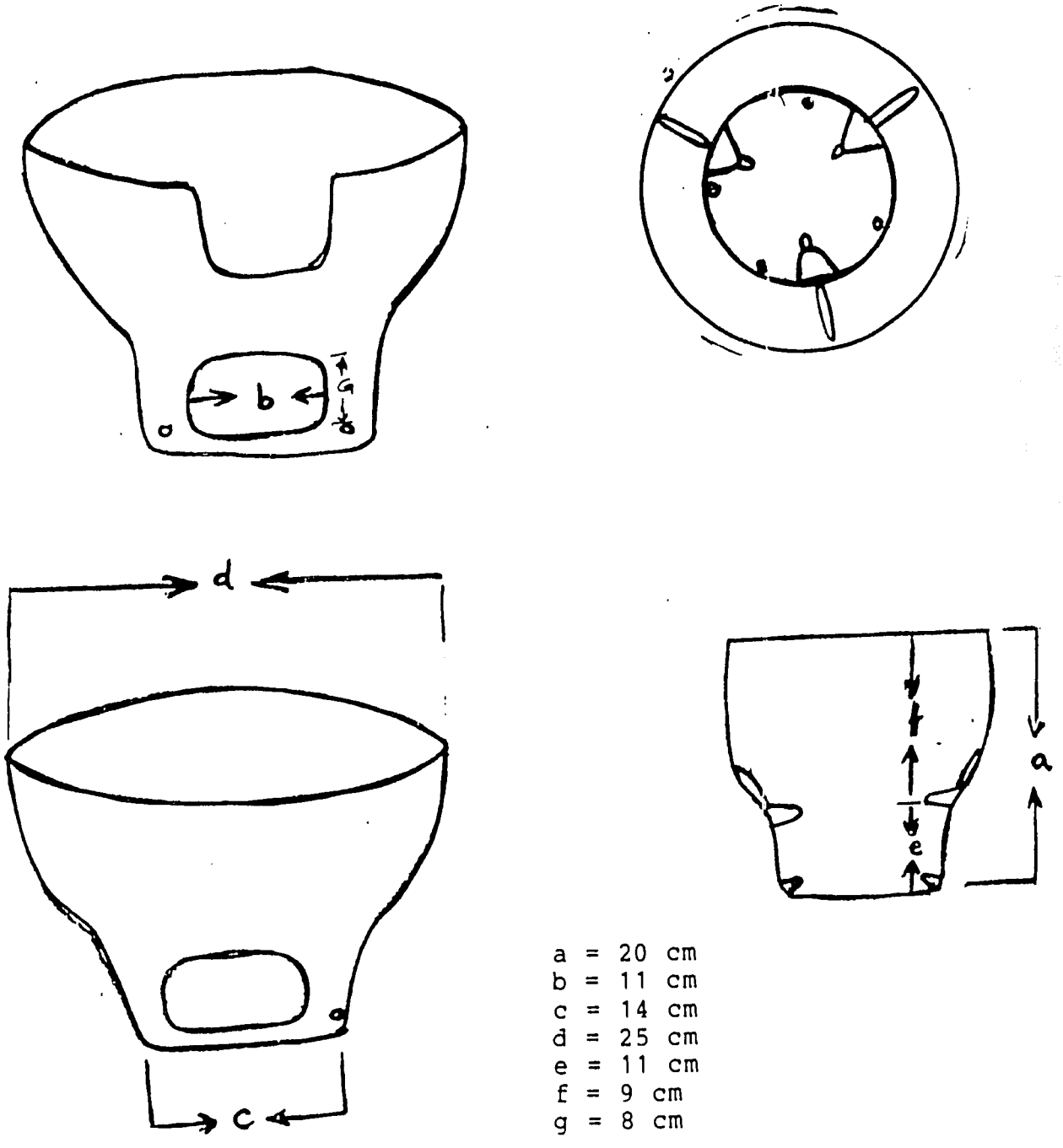

a = 20 cm
b = 11 cm
c = 14 cm
d = 25 cm
e = 11 cm
f = 9 cm
g = 8 cm

This is being field tested in Lower Shabeelle, especially in Golweyn. Finally, we succeeded in making a TCM stove that is close to the above design. However, the stove still has not been made to our dimensions: for example, our "d" was 28 centimeters, but the actual prototype had a "d" equal to 25 centimeters, as indicated above.

Figure 5

Template Ceramic Stove with Metal Grate (TCM) - Shabeelle Stove

The metal grates can be circular and wholly contained within the stove or they may have a metal tab protruding from the firewood opening to support firewood in a horizontal position. Both types of grates were tried but the difference in positioning the wood was minimal. The small circular grate should be adequate.

The SCM received one major complaint in field tests--the outside temperature was too high. Indeed, our measurements showed that its surface was above 250° Celsius when the stove was hottest. To remedy this and also improve its low-power performance by reducing the firebox size, we designed several inserts. A ceramic and a soapstone insert were designed to be supported on the grate and fit below the (metal) pot supports. The other insert was of metal and was shaped to provide both a double-walled firebox and pot supports. It is supported on the grate of the SCM exterior which itself has no pot supports (see Figure 7). This modified stove is referred to as a **Daallo** stove.

Both the original SCM and the Daallo stove have one significant shortcoming--they cannot be used with the **canjeero** pan. To correct this, we have proposed a design which has not yet been built. This stove also uses a metal insert but, unlike the **Daallo,** the insert itself has the grate built into it. The insert in effect becomes the stove and can accommodate the **canjeero** pan as well as small pots. For larger pots, the larger metal cylinder can be added over the insert or "inner stove" to reduce pot heat losses and recover more heat from the hot gases as they travel past the pot.

In addition to the metal and ceramic stove prototypes, two soapstone cookstoves that burn wood were built while we were at Ceel Buur. Ceel Buur is the site of large soapstone quarries and a cooperative where traditional soapstone charcoal cookstoves are made. These two cookstoves are shown in Figures 8 and 9. Both designs have a grate, optimum spacing between grate and pot, and a recess in which the pot sits. The first is an all soapstone stove utilizing a soapstone grate (SSW) while the other requires a metal grate (SSWMG). The principal drawback of soapstone stoves is their cost. Also, for the pots to be properly recessed within the stove, unusually large blocks of soapstone are required. These are relatively rare and therefore much more expensive than the smaller stones used in making traditional soapstone cookstoves. It may, however, be possible to build a stove by joining together pieces carved from two smaller stones.

Soapstone stoves are much more durable than ceramic ones, and can be very attractive. Thus, they may be in demand despite higher cost.

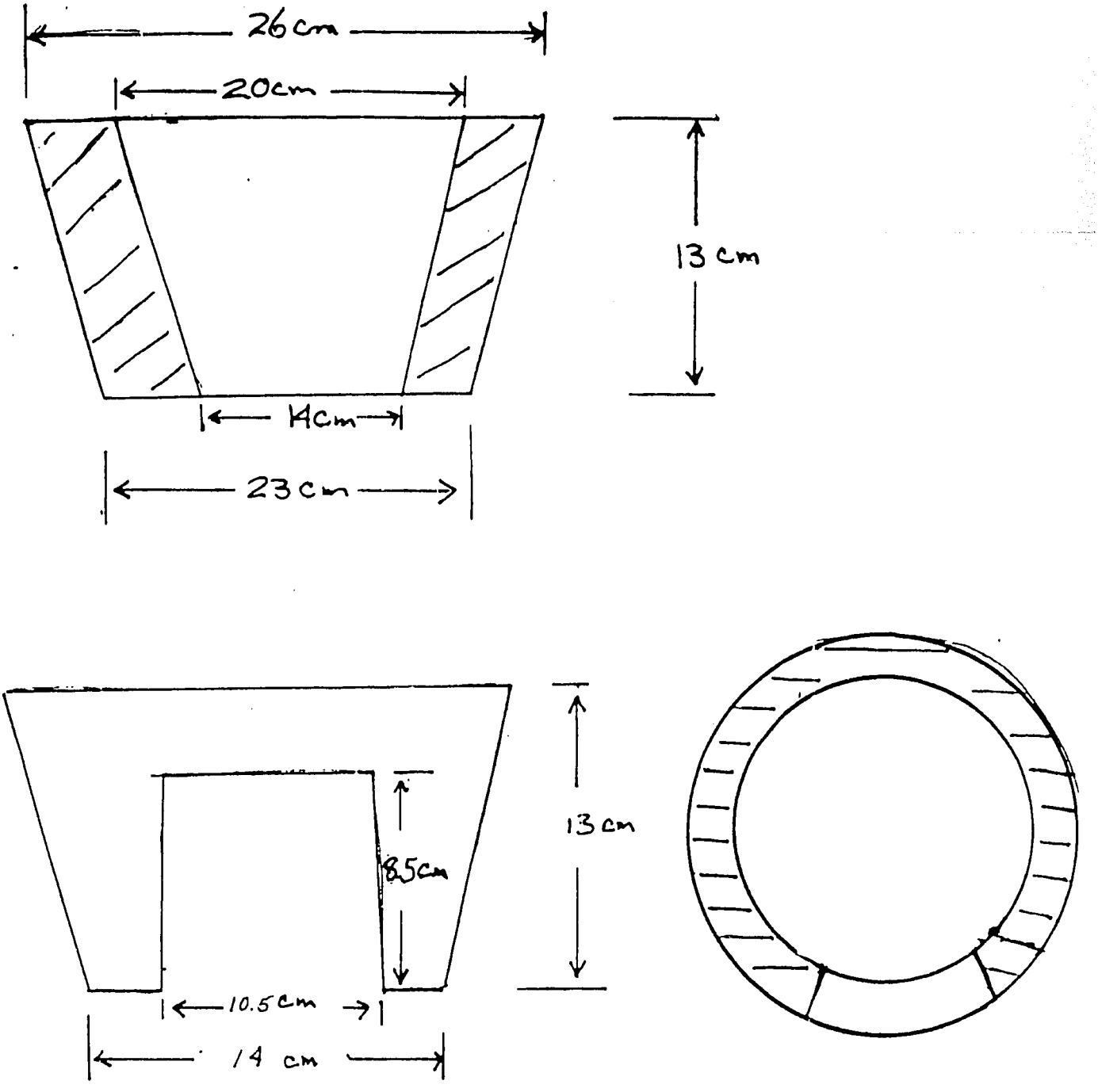

Minimum Area
for Firewood

$= 10.5 \times 8.5 \text{ cm}^2$

$= 89.25 \text{ cm}^2$

Figure 6

Soapstone Insert for SCM Stove

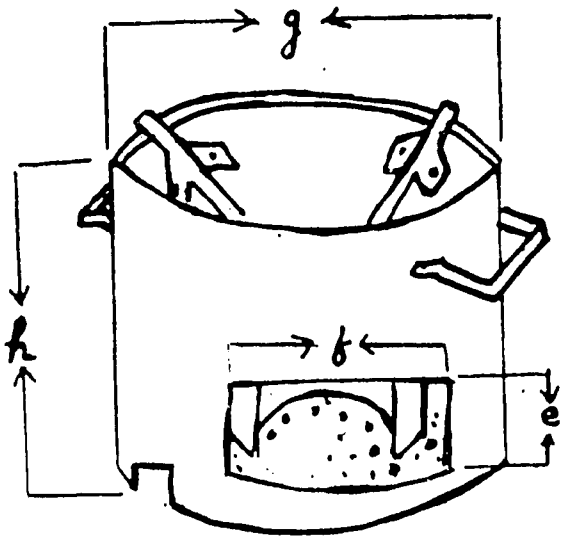

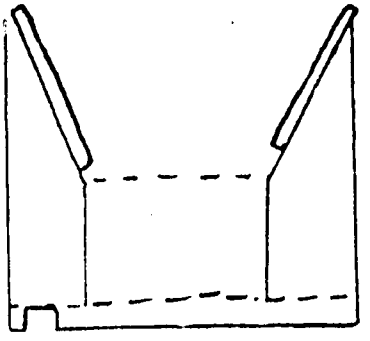

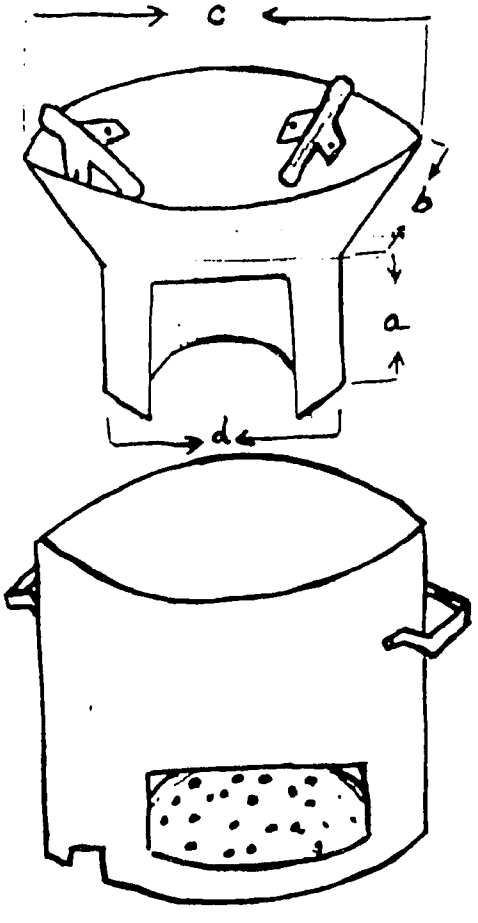

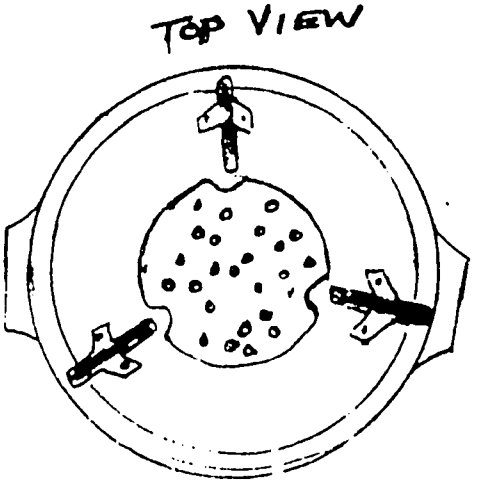

a = 11.5 cm
b = 9.5 cm
c = 28 cm
d = 16.5 cm
e = 7.5 cm
f = 14 cm
g = 30 cm
h = 21 cm

This is a Gau design; it was delayed in production--not yet tested.

Figure 7

Daallo Stove (Double-Walled)

All of the above-mentioned prototypes should be tested by performing Water Boiling Tests. In addition to their energy efficiency, each prototype should be rated according to other characteristics observed during the WBT. A preliminary stove scorecard such as that shown in Form 8 may be used to record this information and facilitate stove comparison.

Stove Production Capability

Ceramic cookstoves

Ceramic cookstoves offer the greatest potential for fuel savings at relatively low cost. The TCS or **Jima** stove ranked well in Water Boiling Tests, is capable of accommodating all pot sizes as well as the **canjeero** pan, and costs about 25 Somali Shillings ($1.50). The TCM or **Shabeelle** stove with a ceramic grate costs 30 Somali Shillings. An optional "cutaway" with this stove permits the use of a **canjeero** pan. The ceramic grates are not durable, but use of a sheet metal grate (such as CGM2) would double the cost of the stove to about 60 Somali Shillings ($3.50). All of these are much less expensive than the metal stoves described below.

The biggest problem in ceramic stove production is quality control. Many of the stoves made by VITA's Muqdisho (Mogadishu) potter are fired for too short a time and thus tend to be very fragile. Broken pieces are brown on the inside--indicating that the stove has not been fired all the way through.

Metal cookstoves

In Muqdisho, there are more than a dozen places where metalsmiths operate and at each location there are more than a dozen metalsmiths who work independently. Their tools are limited to hammer, snips, and punches. They buy new sheet metal stock wholesale, unlike metalsmiths in other parts of Somalia (such as Baydhabo and Qoryooley) and other countries (e.g., Kenya) where scrap metal is the primary resource. The dependence on new stock greatly increases the cost of sheet metal products made in Muqdisho.

The SCM stove and a few prototypes were built by Muqdisho metalsmiths. Initial estimates by various metalsmiths ranged from 230 Somali Shillings to 500 Somali Shillings. Later, after a few prototypes had been built, they could be bought for 190 Somali Shillings. Muqdisho metalsmith estimates of the price of the double-walled **Daallo** stove ranged from 350 Somali Shillings to 500 Somali Shillings. Economies are possible by going to metalsmiths in other towns, because of

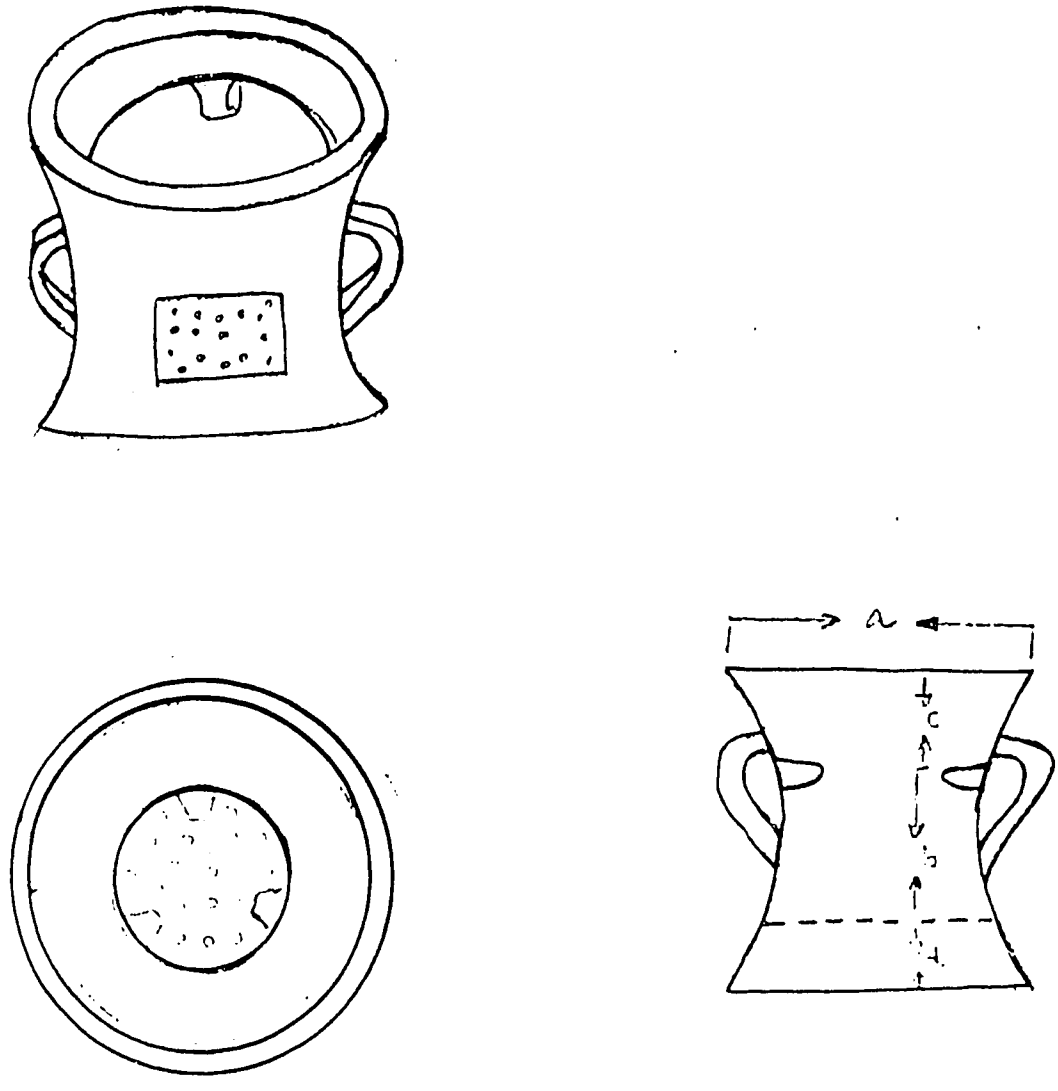

a = 23 cm
b = 11 cm
c = 5 cm
d = 5 cm

Figure 8

All-Soapstone Wood Stove with Built-in Soapstone Grate (SSW)

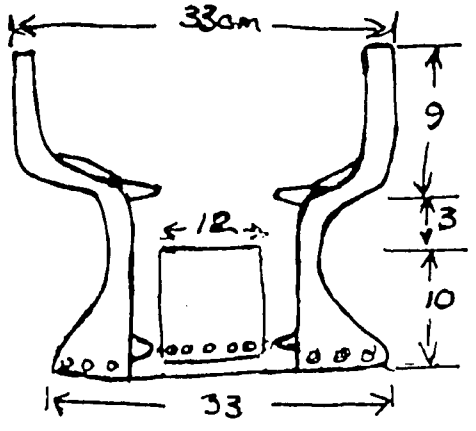

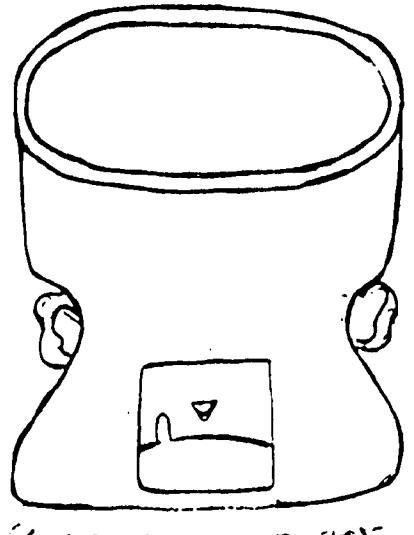

Figure 9

Soapstone Wood Stove with Metal Grate (SSWMG)

lower labor costs and the use of scrap metal. Smiths visited in Baydhabo and Qoryooley use scrap metal.

One of the reasons for the high labor cost--accounting for about half of the total price--is the method of production. Parts are joined together by bending and overlapping seams and rivetting--a time consuming operation. Welding would considerably reduce production time; however, because the metalsmiths do not currently have their own welding equipment, this alternative is even more expensive.

Soapstone cookstoves

Soapstone cookstove prototypes developed by VITA are even more expensive than metal stoves. The Ceel Buur soapstone cooperative is capable of making high quality stoves at relatively high production rates. However, their high cost will make finding markets for these stoves a major difficulty.

Field Tests and Extension

Among the cookstove prototypes, improved ceramic stoves are closest to the point where they can be field tested. Field tests are intended to provide feedback on the use of the stove and data on fuel economy under actual cooking conditions. Surveys of cooking in Somalia have been carried out by VITA in several urban and rural locations. Given this background of data, it would be advantageous to introduce the new stoves within some of these communities. After the new stove users have become familiar with the stoves, a Kitchen Performance Test (KPT) should be carried out. The procedure involved in a KPT is described in the Provisional International Standards (VITA, 1982) and is a part of the procedure used in a recent cooking survey to obtain fuel consumption data (Smale et al., 1984).

The KPT will take advantage of the data collected in the earlier Smale survey. In addition, we propose a variation on the KPT, i.e., the use of a control group. A pool of eligible households is selected from the Smale survey and approached for participation in the KPT (and in any associated stove extension program). Half of the respondents are placed in a control group and the others in a test group. Stoves are given (exchanged, etc.) to the households in the test group. During an initial week the cooks familiarize themselves with the use of the new stove. They are then interviewed to obtain qualitative information about the stove. Data should be collected on the performance of the stoves from the user's perspective, using a simple questionnaire based on experience from the Cali Mataan stove user survey and the various

surveys of cooking practices (VITA/Somalia, 1983). The information sought from the respondents should include the characteristics noted in the preliminary stove scorecard (see Form 8) plus additional comments volunteered by the cooks. The fuel use measurements for the KPT are then recorded for both the households in the test group and those in the control group who continue to use their traditional stoves. The individual house data are recorded on a form such as Form 6.

There are two periods of consumption data for each household--one collected during Smale's earlier survey and the other from the forthcoming survey following the introduction of new stoves. Since there are two groups (the control group and the test group), there will be four sets of data (two groups x two periods). All four sets of data are compiled on a form such as Form 7.

III. CHARCOAL STOVES

Background

Charcoal is the traditional cooking fuel in urban areas of Somalia, especially among upper income households. Traditional charcoal stoves are made of soapstone or metal; some are built into table tops in kitchens. There are several sizes of soapstone stoves which are similar in shape (Figure 10). They are made at the soapstone cooperative in Ceel Buur where the stone is quarried. A popular size soapstone stove costs 220 to 250 Somali Shillings in Muqdisho. Metal charcoal stoves, popular in Northern Somalia, are made from a standard kerosene can (Figure 11). A tabletop charcoal stove consists of a metal grate inserted into a cement tabletop which has an opening for air entry. Ceramic charcoal stoves are also occasionally used in Somalia but are not as durable as metal or soapstone stoves.

The conversion of wood to charcoal is energy inefficient. Improved efficiency in charcoal use would therefore bring about significant wood savings. Since the wood for charcoal production comes from rural areas, reduced charcoal use in urban areas would increase the availability of wood in rural areas.

An indication of the potential for charcoal savings in cooking can be obtained from VITA's surveys of charcoal use in Muqdisho and wood use in Lower Shabeelle. VITA's survey of charcoal consumption in 30 households in each of three Muqdisho neighborhoods showed relatively high consumption--averaging about 5 kilograms per household per day (Smale et

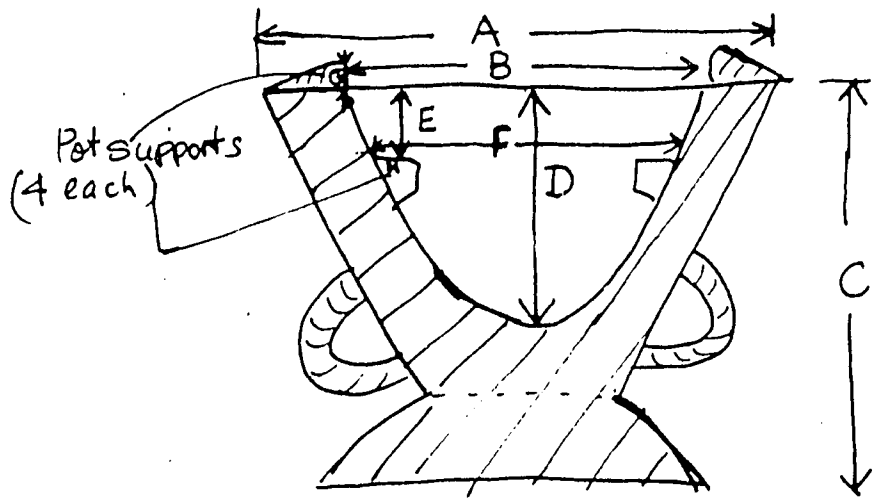

Traditional Soapstone Small (TSS)

A	B	C	D	E	F	G	H
29	22	19-21	11.5	3	20	2	2.5

Pot size: Maximum: None (20 centimeters on lower pot supports)

Minimum: 17 centimeters

Production Price (F.O.B. Ceel Buur): 70 Somali Shillings
In Muqdisho: asking 200 Somali Shillings (one-piece stove is 600 Somali Shillings)

Traditional Soapstone Large (TSL)

37	30	25	15	4	28	2	2.5

Pot size: Maximum: None (27.5 centimeters on lower pot supports)

Minimum: 26 centimeters

Production Price (F.O.B. Ceel Buur): 220 Somali Shillings

In Muqdisho: asking 500-600 Somali Shillings

Figure 10

Traditional Soapstone Stoves (TSS) (TSL)

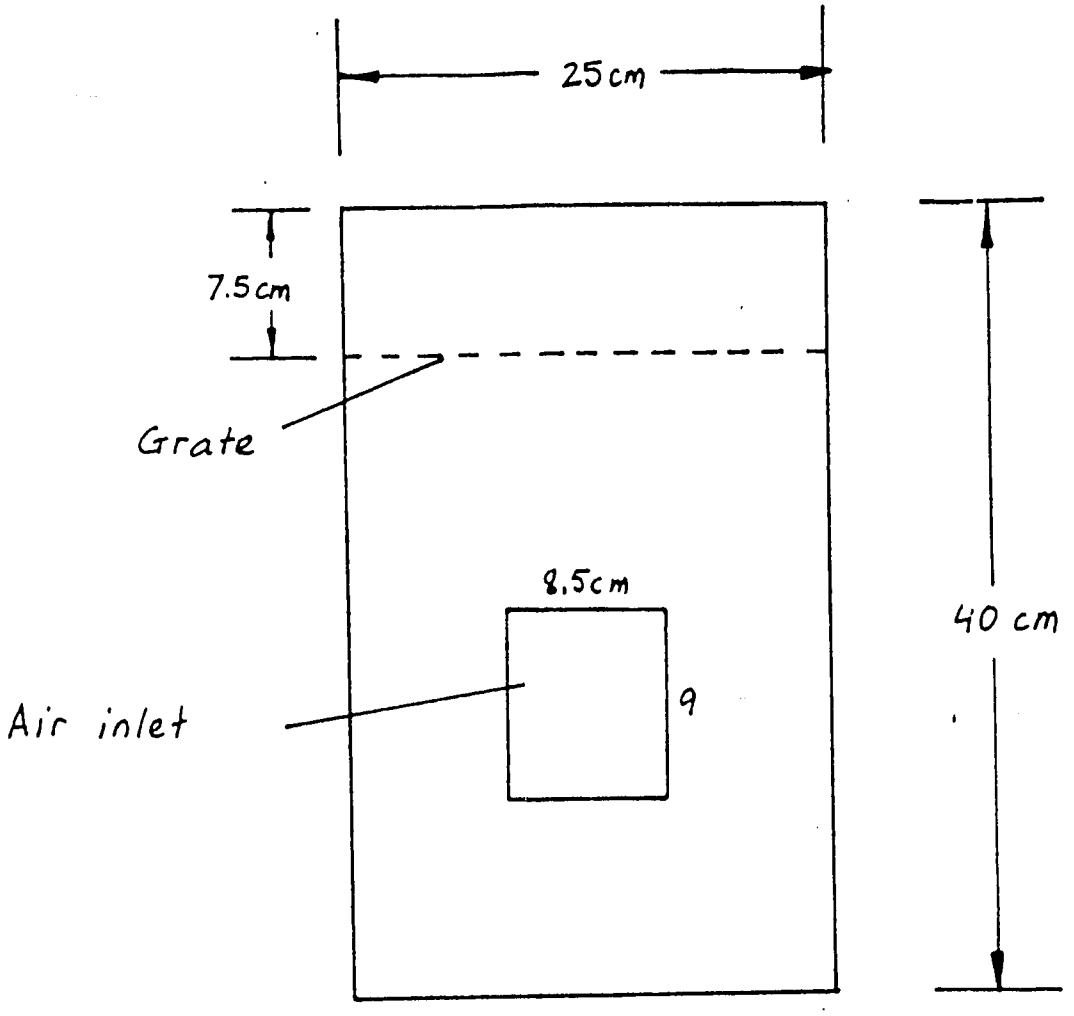

Grate made by interlacing strips of sheet metal; this unit had 64 holes each about 1 cm^2 in area.

Air inlet is sheet metal flap that can be adjusted to control air inflow. Not present in all such stoves.

Pot dimensions: Maximum: No limit. Minimum: None if it sits on charcoal; 26 centimeters if it sits on rim.

Figure 11

"Kerocan" Kerosene Can Charcoal Stove

al, 1984) In equivalent dry weight of wood, this would be 7.5 kilograms per household per day. By comparison, the survey in Lower Shabeelle reported wood consumption of 7.4 kilograms per household per day. Assuming an average moisture content of 15 percent (wet basis), this amounts to an equivalent dry weight of wood use of 6.3 kilograms per household per day. Household sizes in the Muqdisho and Lower Shabeelle surveys were comparable, 7.6 and 7.5 persons, respectively. Thus, on an equivalent dry weight of wood basis, Muqdisho consumption is 7.5/6.3 or 1.2 times larger than that of Lower Shabeelle. However, charcoal stoves are typically twice as efficient as open wood fires or traditional woodstoves, so that for comparable cooking tasks charcoal stoves should consume half as much on an equivalent dry weight of wood basis. (However, if one takes into account the energy wasted in the production of charcoal, then charcoal stoves are less efficient than wood stoves.) The discrepancy with this expected result is 1.2/0.5 or 2.4, i.e., Muqdisho charcoal consumption is about 2.4 times as much as it would be if cooking practices were the same as in Lower Shabeelle. A part of the discrepancy is no doubt due to differences in diet but a major part of the problem is probably the result of wasteful practices.

Comments from stove users indicate that the charcoal left over after cooking is not extinguished but continues to burn. In this way, ignition is easier--no kerosene or matches are needed. This means of stove operation is very much akin to the function of a continuous pilot in gas stoves where a match is not needed for ignition. The pilot in American gas stoves accounts for half of the total gas used by the stove.

Another comment on charcoal use was that any charcoal fragments remaining (at the end of the day, for example) are not re-used because they are thought to be of poor quality.

The findings on cooking practices and charcoal use in Muqdisho consumption need to be verified through detailed and continuous observations of a few households. The information at hand suggests that there is no perceived shortage of charcoal. These practices are in marked contrast to those in traditionally fuel-scarce societies. In India, not only is leftover coal extinguished with water immediately after cooking but even small particles of leftover coal are re-used by mixing them with dung, making them into balls, and drying them in the sun. The apparent lack of interest in charcoal conservation could be a major obstacle in the introduction of fuel-efficient charcoal cookstoves.

A factor that could help in the introduction of fuel-efficient charcoal cookstoves is the high cost of the less efficient charcoal stoves currently being purchased. Since the stoves are already expensive, the somewhat higher cost of

a fuel-efficient model should not be perceived by purchasers as unduly burdensome. Consequently, the maximum acceptable price for a charcoal cookstove is considerably higher than that of a wood-burning cookstove. Another factor that could spur the introduction of alternative stoves would be the presence of other desirable features in addition to fuel efficiency, such as ease of ignition.

Indications of Relative Performance

Water Boiling Tests were carried out on the traditional kerosene can stove, two sizes of soapstone stoves, a traditional ceramic, and a prototype UNICEF (Nairobi) **Umeme** sheet metal stove. These were all available for testing in Muqdisho in December 1983. Two soapstone stove prototypes, built in December and tested in January 1984, are described in the following section on Prototype Development.

The efficiency of a stove is very dependent on the air supply for combustion. For this reason, the stoves were tested under different operating conditions. For instance, in the low-power phase of the test, the heat output and fuel combustion rate can be significantly reduced by decreasing the air supply for combustion. The kerosene can stove and the **Umeme** have adjustable air shutters. The **Umeme,** in addition to having an air shutter, has a bent metal rod spacer which may be placed below the pot. The combustion can be slowed down considerably if the spacer is not used. Without the spacer, the pot rests directly on the rim around the charcoal. The normal operating condition is with the air shutter wide open in the high power phase and almost closed during the low-power phase.

The Water Boiling Test data are shown in Table IV. The **Umeme** was tested under four conditions but there was only one test each for two of these conditions. Pending further measurements, the conclusions are tentative. For the high-power phase, there were four tests with the pot supported on the spacer and four without the spacer. The PHU-HP values are considerably higher with the spacer (averaging 33.4 percent versus 22.9 percent), presumably because the additional air space for combustion products to escape also allows more combustion air to be drawn in, and leads to rapid heat transfer to the pot. The low-power performance, as characterized by GSC-LP, appears to be considerably worse with the spacer, by a factor of 3 or 4.A feature such as the spacer thus has opposite effects on the high and low-power performance of the stove. The test findings emphasize the importance of air supply on the performance of charcoal stoves.

Even without the pot-support spacer, the UNICEF-designed **Umeme** showed better high-power performance than the tradi-

tional stoves. The relatively few tests on the traditional stoves placed their PHU-HP between 16 and 20 percent. The traditional stoves appear to differ significantly in their low-power performance. The traditional ceramic stove (admittedly with only one test) and the kerosene can stove appear to lead the pack of charcoal guzzlers with a GSC-LP about five times higher (i.e., worse) than the **Umeme** without the pot-support spacer.

The smaller, more popular size traditional soapstone stove (TSS) showed considerably better low-power performance than the ceramic or kerosene can stoves, but was only half as efficient in GSC-LP as the **Umeme** without the spacer. It was however more efficient than the **Umeme** used with the pot-support spacer.

The larger traditional soapstone stove (TSL) is comparable in PHU-HP to the TSS but was less efficient in low power operation.

More tests will be necessary to make accurate comparisons but our tentative conclusions are that in low-power operation, the traditional soapstones stoves are considerably more efficient than the traditional ceramic and kerosene can stoves and comparable to the **Umeme**. In high power operation, the **Umeme** is more efficient than the traditional stoves.

Prototype Development

The principal goal of our prototype development efforts were to improve efficiency while controlling stove cost. The traditional ceramic stove is inexpensive and it would be hard to beat its cost (about 25 Somali Shillings). However, ceramic stoves are not likely to be durable when used with charcoal, and no improved ceramic stove was developed during this period. The kerosene can stove costs about 150 Somali Shillings and appears to be inefficient. Our efforts to improve this stove were limited to the development of a ceramic insert to fit around the charcoal of the grate and thereby reduce heat loss from the sides of the stove (see Figure 11).

TABLE IV

CHARCOAL STOVES: SUMMARY OF WATER BOILING TEST DATA

Stove	Test Number	Gross Specific Consumption (GSC)			Percent Heat Utilized (PHU)		
		Overall	HP	LP	HP	LP	Overall
Umeme with pot flush on ring (no air space) air shutter closed for low-power	1	0.124	0.060	0.054	26.9	27.9	27.4
	2	0.133	0.073	0.046	22.6	40.4	28.8
	3	0.128	0.073	0.041	22.4	44.5	29.5
Umeme with pot support, air shutter closed for low-power	4	0.298	0.073	0.191	40.9	21.0	28.1
Umeme with pot flush on ring, air shutter wide open throughout	5	0.275	0.113	0.126	19.8	23.4	21.5
Umeme with pot support, air shutter wide open throughout	6	0.189	0.041	0.132	41.2	27.0	31.3
	7	0.303	0.095	0.169	31.5	21.6	26.0
	8	0.418	0.088	0.271	19.9	21.3	20.8
TSS - Traditional soapstone, small	1	0.163	0.085	0.058	18.1	38.8	25.4
	2	0.228	0.103	0.094	17.0	27.4	21.3
	3	0.192	0.086	0.085	19.8	25.2	22.2
TSL - Traditional soapstone, large (Farshaxan)	1	0.305	0.140	0.087	19.1	48.2	29.4
	2	0.259	0.092	0.120	20.5	37.2	28.2
	3	0.381	0.117	0.161	19.5	45.8	30.6
Traditional ceramic	1	--	0.116	--	16.1	--	--
	2	0.730	0.169	0.400	19.9	21.3	20.8
Kerosene can	1	0.447	0.111	0.270	18.5	19.2	18.9
	2	(Modified test configuration--not comparable)					
	3	0.488	0.125	0.258	16.6	27.2	22.2

TABLE IV (cont'd.)

CHARCOAL STOVES: SUMMARY OF WATER BOILING TEST DATA

Stove	Test Number	Gross Specific Consumption (GSC)			Percent Heat Utilized (PHU)		
		Overall	HP	LP	HP	LP	Overall
1PSS-one piece soapstone, air inlet closed in low-power phase	1	0.306	0.103	0.142	20.3	35.5	27.4
	8	0.680	0.103	0.416	18.7	31.5	26.5
	9	0.915	0.067	0.692	35.9	27.9	29.8
	10	0.341	0.129	0.188	26.4	9.2	16.9
	11	3.119	0.119	1.905	24.0	39.4	32.3
	12	--	0.146	--	26.9	40.1	34.6
	13	0.842	0.102	0.483	26.7	42.6	35.9
1PSS-one piece soapstone, air inlet wide open throughout	2	0.467	0.104	0.252	21.4	35.4	29.0
	3	0.526	0.089	0.367	20.8	42.8	33.7
	4	0.525	0.084	0.330	20.9	33.4	28.8
	5	0.725	0.063	0.521	28.9	35.3	33.5
	6	0.918	0.141	0.493	16.2	33.8	25.6
	7	0.961	0.105	0.597	23.5	34.1	30.1
2PSS-two piece soapstone, air inlet wide open throughout	1	0.468	0.090	0.290	20.8	27.5	25.0
	2	0.596	0.072	0.410	22.9	31.0	28.5
	3	0.582	0.099	0.321	22.1	42.1	33.1
	4	1.368	0.109	0.824	24.4	39.1	33.3
	5	1.900	0.127	1.230	27.4	28.1	27.9
	6	1.171	0.096	0.763	33.4	35.0	34.4
	7	1.827	0.108	1.115	23.3	41.0	34.1
2PSS-two piece soapstone, air inlet closed in low-power phase	8	0.802	0.095	0.479	35.3	41.3	38.9
	9	0.726	0.110	0.377	24.9	47.2	36.5

Two soapstone stove prototypes were developed in December 1983. The intent was to improve the high-power efficiency of the stove by adding a grate, and reduce pot heat losses by recessing the pot within the stove. Both concepts were borrowed from the **Umeme** design. How the low-power performance would be affected is not known.

The two stoves are essentially the same shape and size--the main difference being in their method of construction. In order for the pots to be recessed within the stove body, the stove has to be large. Consequently, the stone that needs to be quarried is also large and in fact larger than most stones commonly available. Thus, making the stove out of one piece of stone requires unusually large stones and is very expensive. An alternative is to make the stove by joining together two pieces, using smaller and more commonly available stones.

Two prototypes--a one piece and a two piece stove--were built. They are referred to as 1PSS and 2PSS, respectively (see Figures 12 and 13). Both stoves have air supply openings below theirgrates, making it easier to fan the fire and maintain ignition of the stove than in conventional stoves.

Water Boiling Test data for the 1PSS and 2PSS stoves are shown in Table IV. These stoves have no air shutters for control of air inflow. However, wooden blocks were cut to fit into the air opening for test purposes. The air opening was blocked in the low-power phase of some of the tests. There were 13 tests of the 1PSS and nine tests of the 2PSS. Of the 13 1PSS tests, seven had the air inlet closed in the low-power phase and six had it open. In seven of the 2PSS tests, the air inlet was wide open throughout while in two others it was closed. The PHU-HP of both stoves is significantly better than that of the traditional charcoal stoves and perhaps somewhat better than that of the **Umeme** used without the pot-support spacer. The **Umeme's** high-power performance with the spacer is much better than that of the 1PSS or the 2PSS. Average PHU-HP for 1PSS and 2PSS are 23.9 and 26.1 percent, respectively.

In their low-power performance, however, the prototypes fall far short of the mark. Both stoves perform worse in the low-power phase than the traditional stoves or the **Umeme**, irrespective of whether the air inlet was open or closed.

One reason for the poor low-power performance of the prototypes appears to be the rapid burning rate of charcoal. The charcoal burning rate in the low-power phase was several times faster for the 1PSS and 2PSS stoves than for the other stoves (with the possible exception of the kerosene can stove).

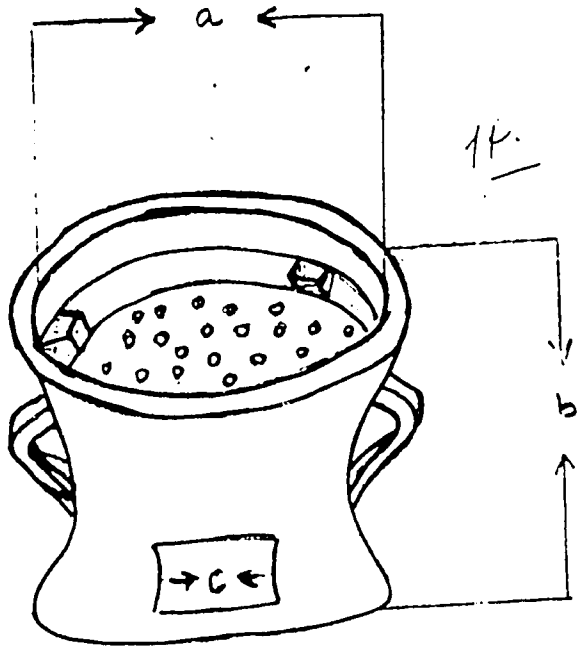

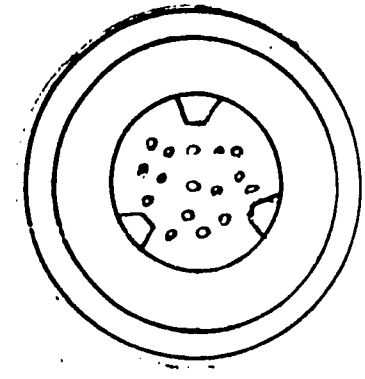

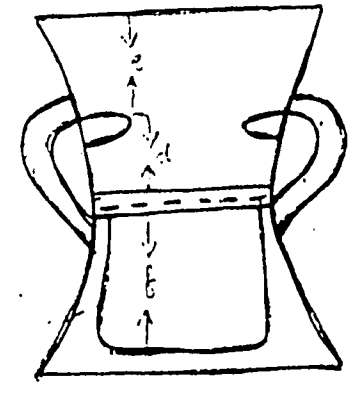

a = 28 cm
b = 24 cm
c = 11 cm
d = 9 cm
e = 5 cm
f = 10 cm

Pot Sizes:

Maximum: 24 centimeters; Minimum: 16 centimeters

(By scooping out the inside above pot support by 1 centimeter all around, could accommodate pots as big as 26 centimeters)

Problems:

Requires large block of stone--difficult to obtain and likely to be expensive.

Figure 12

One-Piece Soapstone Charcoal Stove (1PSS)

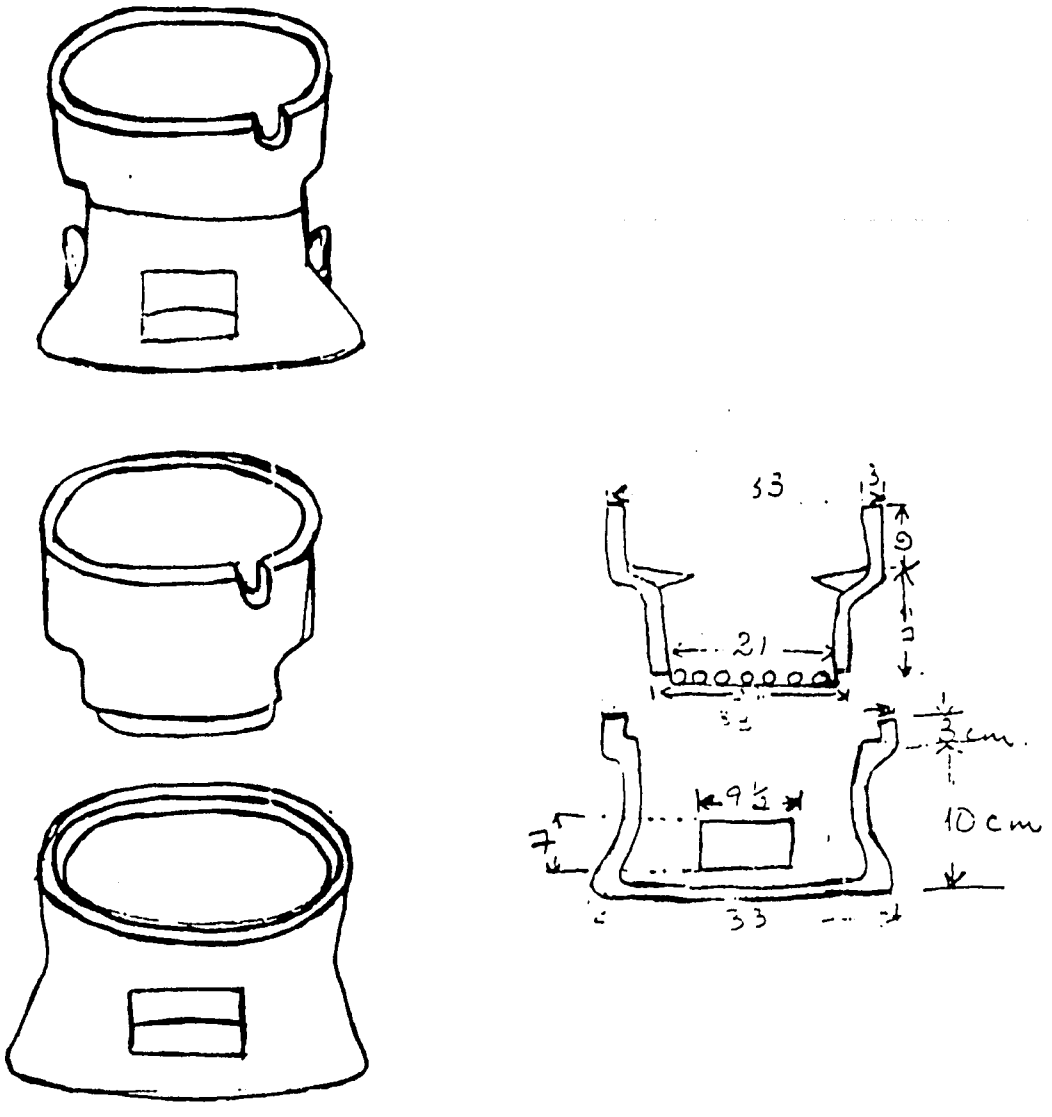

Pot Sizes:

Maximum: 20 centimeters; Minimum: 12 centimeters

(By scooping out the inside above pot support by 1 centimeter all around, pot diameter as large as 22 centimeters may be accommodated)

Problems:

Limited to small pots; area of holes in grate too small--may limit combustion.

Figure 13

Two-Piece Soapstone Charcoal Stove (2PSS)

Further design changes for soapstone stoves might include reduced size of combustion chamber and smaller openings in the grate. These developments may not be feasible however, because the modified stoves would be quite expensive, probably comparable to the 1PSS or 2PSS. Our prototypes cost about 700 Somali Shillings each in Ceel Buur but later negotiations reduced the cost estimate of the 1PSS stove to 350 to 450 Somali Shillings. Muqdisho prices would be substantially higher.

A less costly alternative would be to add a grate and air holes to a traditional soapstone stove (TSS) in order to improve its high-power performance, hopefully without lowering its low-power performance. A metal grate has been cut to shape but no tests had been carried out as of January 1984.

The **Umeme** prototype built in Muqdisho costs 530 Somali Shillings (US$30), considerably more than its Kenyan counterpart (US$6). No other metal prototypes were built in December 1983. The **Umeme** design would be difficult to out-perform. The challenge is to built it more cheaply.

Stove Production Capability

All prototype stove models were artisan built and therefore capable of local production. The chief problem appears to be high cost.

Soapstone cookstoves

In Somalia, about 150 craftsmen are engaged in the production of a variety of items made from soapstone such as incense holders, ashtrays, and several sizes of cookstoves. Demand for these products is high.

The stones for cookstoves are approximately shaped when they are quarried. The rest of the work is done at the cooperative's workshop. A skilled artisan can carve six standard-sized stoves a day.

Although no measurements are made during production, the finished dimensions of the stoves are relatively uniform. We measured 10 stoves of one model. The outside diameter averaged 38.0 centimeters with a standard deviation of 1.25 centimeters. The inside diameter averaged 30.0 centimeters with a standard deviation of 1.17 centimeters, while the overall height had a mean and standard deviation of 28.2 and 1.48 centimeters, respectively. Thus, the level of artisan skill should not be a limiting factor in the production of stoves where dimensions are critical.

A more significant limitation is the size of the stone needed. Traditional stoves are roughly conical in shape and thus require only one large surface. Stoves large enough for pots to be recessed into them, such as the 1PSS and 2PSS prototypes, will require a block of stone with six large surfaces. The 1PSS required a block 35 x 35 x 24 centimeters and was located with some difficulty. Even the two-piece 2PSS required large blocks of 35 x 35 x 18 centimeters and 35 x 35 x 15 centimeters. The relative scarcity of large blocks and the extra work involved in making large stoves are reflected in a substantially increased cost. It appears unlikely that soapstone stoves large enough for cooking pots to be recessed into them can be built in significant numbers.

Traditional soapstone stoves are presently made in large quantities in a well-organized cooperative. It appears that the production rate can be increased to keep up with the growing demand for these and similar stoves. Ultimately, however, dwindling supplies of soapstone may slow production.

Field Testing and Extension

At present, no prototype is suitable for promotion. The only possible exception is the **Umeme** if it can be produced cheaply in a town other than Muqdisho where production costs are high. Another problem hampering charcoal stove extension is disclosed by the results of the charcoal consumption survey in Muqdisho. The survey reveals the existence of both wasteful habits and unusually high consumption.

These data suggest that the potential for charcoal savings through technical means (such as the introduction of a more efficient cookstove) is small. Without any motivation to conserve, conservation is unlikely to be successful. However, charcoal conservation may have significant potential in areas of the country where fuel price pressures are being felt. Charcoal stove promotion should be initiated only in these communities, particularly where the apparently inefficient kerosene can stove is popular.

IV. PRINCIPAL FINDINGS AND RECOMMENDATIONS

Wood Stoves

Finding: Water Boiling Tests demonstrated that several prototype ceramic stoves and the short cylindrical metal stove (SCM) were more fuel-efficient than the three-stone fire (3ST), the traditional ceramic stove used in Lower Shabeelle (TCLS), or the traditional ceramic-in-bucket stove (CBS). The SCM and improved ceramic stoves are discussed below. However, more baseline information is needed on the traditional stoves and the three-stone fire.

Recommendation: Conduct more Water Boiling Tests on the 3ST, TCLS, and CBS stoves.

Finding: One area not adequately convered in VITA's exhaustive survey of cooking practices in Somalia is the amount of food cooked in different households, and the corresponding pot sizes. Clearly, this is an intrusive measurement but should be taken for a few households to aid in the interpretion of Water Boiling Test data.

Recommendation: Observe cooking practices in a few households and record quantity of food cooked and water used, pot sizes, household size, fuel use, and stove characteristics. Use these data to develop controlled cooking tests, and to calculate expected fuel use in cooking based on Water Boiling Test data.

Metal wood stoves

Finding: Metal stoves are far more expensive than the new ceramic ones. The least expensive of the metal stoves (SCM) costs 190 Somali Shillings compared with 30 Somali Shillings for ceramic stoves. Nevertheless, metal stoves can be serious competitors because they are much more durable than ceramic ones. Also the nature of metalsmithing compared to ceramics suggests that it would be easier to control dimensions and maintain high performance in a metal stove.

The metal SCM or **Taleh** stove has excellent high-power performance but relatively poor low-power performance. Apart from its inability to accomodate **canjeero** pans, it also has a very high surface temperature making it hazardous to children. The surface temperature can be lowered, and **canjeero**

pans accommodated through design changes, as in the case of the double-walled **Daallo** stove (see Figure 7). However, this stove will be even more expensive because of the additional material and labor requirements. At its price it would be affordable only to upper income households, many of which use charcoal rather than wood. One possible market for the SCM or the **Daallo** stove is commercial cooking such as tea shops and small restaurants where wood is used.

Recommendations:

(a) Continue development of the **Daallo** stove to determine optimum dimensions. Identify potential users of this type of stove, and carry out field tests to obtain user feedback and measure fuel savings relative to traditional cooking.

(b) Continue the search for alternate production schemes (e.g., use of scrap metal) to reduce the cost of metal stoves. Examine the extent of entrepreneurial capability for making the manufacture and sale of metal stoves fall within the existing market structure.

Ceramic wood stoves

Finding: Ceramic stoves are inexpensive, and the fuel-efficient models are only slightly more expensive than ceramic stoves already in use in several parts of Somalia. One ceramic stove developed by VITA/Somalia--the TCS or **Jima** stove--appears to have good performance in both high and low-power operation. Another stove that performed well in Water Boiling Tests is the NTCNGS. This stove cannot accommodate a **canjeero** pan, however. Keeping the dimensions unchanged, the TCS and NTCNGS stove designs were modified in two ways--a grate was added and a cutaway at the top permitted a **canjeero** pan to be used. The resulting new models are known, respectively, as the TCM or **Shabeelle** stove and the CGM stove. Either of these stoves can be built with a ceramic or a metal grate. Use of a metal grate, however, doubles the cost of the stove (60 Somali Shillings versus 30 Somali Shillings).

Recommendation: The TCS (with no grate), the TCM, and the CGM stoves (both with ceramic grates) should be field tested in several locations, i.e., Muqdisho, Lower Shabeelle, Luuq, etc.

Finding: Although the TCS, TCM, and CGM stove designs have demonstrated fuel savings compared to traditional stoves in Water Boiling Tests, the designs are not yet optimized. Nor do we know how to match the stoves to pot size and size of household. To gain further insight into these areas, additional Water Boiling Tests are necessary.

Recommendation: Pick one of the ceramic stoves that has a small coefficient of variation in its performance (as indicated by Water Boiling Test data); repeat Water Boiling Tests with different pots and with different amounts of water in the pot to determine the effect of these variables on stove performance.

Finding: The dimensions of ceramic stoves could be important to their fuel economy. Several questions are relevant: How reproducible can a potter make the various dimensions of the stove? To what extent can the dimensional variability be reduced by using appropriate templates? How much shrinkage occurs with firing? These questions lead to two recommendations.

Recommendations:

(a) Measure key dimensions of several stoves of the same design, before and after firing. The stoves should be from several batches. Key dimensions include outer and inner diameter at the top of the stove; diameter at the pot supports (i.e., largest diameter pot that will sit directly on the supports); vertical distance from top of grate to top of pot supports; and overall height. The results should be recorded as means and standard deviations, grouped by batch. If appropriate, record data from before and after firing to determine change of dimensions.

(b) Develop templates to aid in the construction of stoves with correct dimensions. Evaluate the effectiveness of the template by making the measurements in (a) above. Modify templates if necessary.

Soapstone wood stoves

Finding: Traditionally, soapstone cookstoves are rarely used in Somalia, and there are no well-established markets into which an efficient soapstone stove might be readily introduced. Soapstone stove prototypes were built in December

1983, and are expected to be comparable in cost to metal stoves. As of January 1984, Water Boiling Tests had not been carried out on these stoves. If they are found to be as efficient as the metal stoves, then they may be targeted to the same markets. Current indications are that they are likely to be less efficient than metal stoves.

Recommendation: Carry out Water Boiling Tests on soapstone stove prototypes.

Charcoal Stoves

Finding: It is difficult to reconcile the relatively high consumption of charcoal recorded in VITA's cooking survey and the charcoal consumption rates measured in our Water Boiling Tests. It is therefore important to monitor cooking patterns in a few households in more depth.

Recommendation: Observe cooking practices in a few households and record quantity of food cooked and water used, pot sizes, household size, fuel use, and stove characteristics, by meal. These data should be compared to corresponding Water Boiling Test data in order to reconcile the apparent differences in consumption rate. Controlled cooking cycles for testing charcoal stoves should be developed.

Finding: More baseline data are needed on the fuel use characteristics of traditional stoves. Moreover, charcoal stoves appear to be left in use for periods of time with no pots on the stove. The fuel consumption rate in this condition should be determined.

Recommendation: Carry out more Water Boiling Tests on the kerosene can charcoal stove; also measure fuel combustion rate when there is no pot on the stove. Repeat the measurements for a stove equipped with the ceramic insert designed to confine the firebox. Carry out Water Boiling Tests on traditional ceramic charcoal stoves.

Finding: In testing charcoal stoves we feel that it is particularly important to use specific consumption rather than percent heat utilized to characterize low-power performance. For instance, in several cases, (e.g., TSL), the low-power percent heat utilized values were high because large quantities of water evaporated during the simmering phase. However, this is not really useful heat and the specific consumption

shows the low-power performance of the stove to be poorer than that of the TSS.

More Water Boiling Test data are also needed for the Umeme, and some more on the traditional soapstone stoves TSS and TSL. Present indications are that the **Umeme** is the most efficient, but the TSS is also quite respectable in performance. The kerosene can stove is considerably less efficient. The prototype soapstone stoves 1PSS and 2PSS are less efficient than the Umeme and the TSS. Modifications such as a smaller firebox and the addition of an air shutter to control air supply for combustion might lead to improved performance. Control of air supply appears to be important to reduce full use during the low-power phase of stove use. The **Umeme** is considerably more expensive than TSS. A metal stove design similar to the **Daallo** double-wall metal wood stove might offer a simpler, less expensive alternative to the **Umeme.** These circumstances lead to the following set of recommendations for the development and dissemination of charcoal stoves.

Recommendations:

(a) Carry out more Water Boiling Tests on the **Umeme.**

(b) Carry out at least two more WBTs on each of the TSS and the TSL.

(c) Adapt the TSS with a grate and air holes below the grate. Air holes should point down into the stove to keep ash from falling out.

(d) Modify the soapstone prototypes 1PSS and 2PSS to make smaller fireboxes and to control air supply. Carry out WBTs with the prototype(s).

(e) Develop a double-wall metal stove along the lines of the **Daallo** stove for use with charcoal. Carry out WBTs with the prototype.

(f) Improved stoves should not be introduced to replace the use of the TSS stove which is already fairly efficient. Rather, dissemination efforts should be directed at households using the less efficient kerosene can stove.

Further developments and dissemination efforts will depend on the results of the findings of the tests recommended above.

APPENDIX A

INTERPRETING THE RESULTS OF WATER BOILING TESTS CARRIED OUT USING THE 1982 PROVISIONAL INTERNATIONAL STANDARDS

A set of procedures for testing the efficiency of wood-burning cookstoves was developed at a meeting of experts hosted by VITA in Arlington, Virginia, in December 1982 (VITA, 1982). Of the three types of tests described in this document, Water Boiling Tests (WBT) are defined as "short, simple simulations of standard cooking procedures....They are used for a quick comparison of the performance of different stoves or the performance of the same stove under different operating conditions....Test results are expressed in terms of wood consumption and time required." An example of a data and calculations form for water boiling tests is given on page 11 of the 1982 Provisional International Standards (VITA, 1982). The form contains all the collected data but does not indicate which is the way of normalizing wood consumption. The only normalized index shown is the standard specific consumption (SSC), defined as equivalent dry wood consumed (kg) per unit of water evaporated from the first pot. This index is calculated for both high and low power phases and is one of the two indices to be reported in the Test Series Reporting Form (VITA, 1982 page 13). The other index is a consumption ratio which is of no relevance to single pot stoves.

The problem with using SSC as an index is that credit is given <u>only to the water evaporated</u>. In the high power phase of the WBT, a major part of the energy (usually more than half) is used to heat the water to boiling point, and the remainder is used for evaporation. In normalizing wood consumption to the weight of water evaporated, we are disregarding the quantity of water that was actually heated to boiling. Thus, the index does not differentiate between 200 grams of water evaporated from a pot which initially held two liters of water and a pot which held five liters.

For the low-power test, the SSC index is even more misleading. This phase simulates an hour of simmering. For cooking involving simmering, the amount of water boiled away does not aid cooking. As long as the water is maintained at the boiling point, the cooking time is unaffected by how much water was boiled away. This is understood in the Standards document, whose introduction states that "These standards are based on a broader description and justification of efficiency than Percentage of Heat Utilized (PHU). They interpret

evaporation as a measure of energy wasted, not energy used (see VITA, 1982 Appendix I, Concepts of Efficiency)." However, these sentiments are not reflected in the use of SSC for measuring the low-power performance of the stove.

Appendix I of the Standards document defines various efficiency concepts. Two quantities are of particular significance--the cooking efficiency and specific consumption.

Cooking efficiency is defined (VITA, 1982 page 46) as:

$$C.E. = \frac{\text{heat absorbed by the food}}{\text{heat consumed by fuelwood}}$$

and specific consumption is defined as:

$$S.C. = \frac{\text{mass of consumed fuelwood}}{\text{mass of cooked food}}$$

In section 6 of Appendix I (VITA, 1982 p. 48), the document discusses "Efficiencies in WBTs." Here it notes that during simmering, cooking efficiency is zero because the food (water) remains at the same temperature. Specific consumption remains finite and is thus a preferred index. For the low power phase of the WBT, specific consumption can be defined as:

$$SC\ (WBT) = \frac{\text{mass of consumed fuelwood}}{\text{mass of water remaining at the end of the test}}$$

For the high-power test we are interested in measuring the total heat delivered to the pot, including the heat needed to evaporate water. Here, Percent Heat Utilized (PHU) is a convenient normalization. It would be defined as:

$$PHU = \frac{\text{sensible plus latent heat gained by the water in the pot}}{\text{fuelwood energy consumed}}$$

(We prefer to use the expression "fuelwood energy consumed" instead of "heat consumed by fuelwood," the expression used in the Standards document. Both refer to the chemical energy content of the fuelwood consumed less the energy content of residual charcoal.)

PHU appears to be the most convenient index of performance for the high-power test and SC for the low-power test. Using two different indices to characterize the two phases of the test is awkward, and makes it impossible to express the per-

42

formance of the combined high-power and low-power tests. We propose that the results of Water Boiling Tests be expressed in terms of both PHU and SC for each phase of the test as well as the complete test. However, in interpreting the results, one should pay more attention to PHU for the high-power test and SC for the low-power test.

A form for recording WBT data measured in individual tests had already been designed by Mohamed Hassan and was used during our tests (see Forms 1 (a) and 1 (b)).

Another form has been designed for recording quantities calculated from individual test data. Each line of the form corresponds to a single WBT. This is an extra-wide form which is convenient for use with a microcomputer spreadsheet program. The columns of data are as follows: (left to right):

Duration of tests

From ignition:

HP
LP

From pot addition:

HP
LP

Water Evaporation

HP
LP

Gross Wood Consumption (g)

HP
LP
Total

Net Wood Consumption (g)

HP
LP
Total

Gross Specific Consumption

HP
LP
Total

43

PHU (%)

HP
LP
Overall

Gross Wood Consumption Rate (g/min)

HP
LP
Overall

Water Heating Rate (Watts)

HP
LP
Overall

Forms 2 and 3 were designed for compiling data based on a series of Water Boiling Tests for a given stove and operating condition. Form 2 shows basic data describing the test conditions while Form 3 shows the numerical data based on consumption measurements.

Forms 2 and 3 summarize the performance of the stove/operating condition derived from Water Boiling Tests. They are comprehensive but do not make it easy to compare one stove/operating condition with another. For comparing different stoves/operating conditions we choose to show only the two most important parameters--the PHU for the high-power test and the specific consumption for the low-power test. A more efficient stove is characterized by a high value of the high-power PHU and a low value of the specific consumption at low power. A simplified format useful for comparing different stoves and/or operating conditions is shown in Form 4.

In comparing stove/operating condition A with stove/operating condition B if the high-power PHU of A is higher and its low-power SC is lower, then clearly A is more efficient than B. If, however, A is better than B at high power and worse at low power or vice versa then rating one against the other becomes difficult. A meaningful comparison can only be made on the basis of specific cooking tasks. If the cooking is done primarily at high power, the high-power PHU will be more important in determining overall efficiency. Similarly, if a substantial amount of the cooking involves simmering, the low-power SC is going to be more relevant. Fortunately, Water Boiling Test data can be used in a more quantitative way to compare the performance of different stoves for specified cooking tasks.

Estimating Fuel Consumed for Typical Cooking Situations from WBT Data

The fuelwood (or charcoal) that would be consumed in a specified cooking operation can be estimated explicitly from Water Boiling Test data. The method is illustrated in Table III of the Standards document (VITA, 1982, p. 51) using hypothetical test data. Here we present a data form and calculation procedure for using results from a series of Water Boiling Tests to estimate fuel consumption for a specified cooking task. Relevant data from each test are collected in the data form shown (see Form 5). The data are separated into high and-low power performance. For the high-power part we record the weight of water at the start and end of the test, from which we calculate the amount evaporated. Assuming that all of the evaporation takes place after the water reaches the boiling point, we calculate an evaporation rate. We also record the time it took for the water to boil.

Fuel consumption for wood is expressed as the gross wood consumption rate. The gross wood consumption rate is the difference between the wood weights at the start and end of the test. We use the term "gross" to signify that no credit is taken for any charcoal remaining in the stove at the end of the test. This is in keeping with Somali practice where the charcoal remaining is typically not utilized for subsequent cooking. In other places, net consumption may be more relevant. The weight of wood consumed is converted to equivalent dry weight by adjusting for the moisture content. The gross wood consumption rate is then the gross wood consumption divided by the test duration (from ignition to end of test). For the low power phase of the test, the same parameters are recorded except for "time to boil" which is not relevant.

For charcoal the procedure is similar but simpler. The fuel consumption is the difference in the weight of charcoal at the start and the end of the test. There is no moisture adjustment necessary.

After the appropriate data have been entered onto Form 5, the mean values are computed. The quantities used in the calculation procedure are labelled "a" through "f" in Form 5.

Consider a cooking situation which involves bringing the food and water to a boil and then simmering for "S" minutes. The quantity of food and water remaining at the end of the simmering is "W" kilograms. The amount of water evaporated during the simmering phase:

$$G = \frac{S \times e}{60} \text{ kg}$$

Therefore the initial weight of food and water = W + G.

The time to boil is proportional to the initial weight of food and water:

$$H = \frac{W + G}{a} \times c \text{ minutes}$$

The wood consumed in bringing the pot to a boil:

$$J = \frac{H}{60} \times d \text{ kg}$$

The wood consumed in "S" minutes of simmering:

$$K = \frac{S}{60} \times f \text{ kg}$$

Total wood consumed = J + K kg

Algebraically, this can be expressed as:

$$\begin{aligned} \text{Total wood consumed} &= J + K \\ &= \frac{Hd}{60} + \frac{Sf}{60} \\ &= \frac{W + G}{a} \times \frac{cd}{60} + \frac{Sf}{60} \\ &= \frac{W + \frac{Se}{60}}{a} \times \frac{cd}{60} + \frac{Sf}{60} \end{aligned}$$

i.e. total wood consumed $= \frac{(60W + Se)cd}{3600a} + \frac{Sf}{60}$ (expressed in kg)

The procedure is illustrated through the following example:

WBT numbers 2, 3, and 4 of stove TCS are used. The relevant data are shown in Form 5 (b).

a = 2.5kg
b = 0.88 kg/h
c = 29.3 minutes
d = 0.602 kg/h
e = 0.382 kg/h
f = 0.324 kg/h

46

Consider a cooking situation involving boiling and simmering for 30 minutes with a final weight of cooked food and water = 4.0 kg.

Thus, S = 30 minutes and W = 4.0 kg.

Total wood consumed

$$= \frac{60W + Se}{3600a} \times cd + \frac{Sf}{60}$$

$$= \frac{60 \times 4 + 30 \times 0.382}{3600 \times 2.5} \times 29.3 \times 0.602 + \frac{30 \times 0.324}{60}$$

$$= 0.493 + 0.162 = 0.655 \text{ kg}$$

In principle, since the high-power and low-power performance in any given test are related, it would be more appropriate to run the cooking simulation separately on the performance of each test rather than on the averaged performance parameters. This will yield an estimate of fuel consumption for each test from which an average (and a standard deviation) can be calculated.

In the above "cooking" sample, the wood consumption for the tests 2, 3, and 4 would be 0.673, 0.561 and 0.621 kilograms respectively with an average 0.618 kilograms which is somewhat smaller than the 0.655 kilograms calculated from averaged performance. Note that calculations based on individual tests will also yield a standard deviation of the estimated wood consumption in the cooking simulation. Because of the additional calculations necessary, calculation based on individual tests are impractical without a computer.

47

APPENDIX B

MEMORANDUM

TO: Hank

FROM: Gautam

SUBJECT: Computerizing WBT Data

DATE: December 24, 1983

As described in the interim report, the data obtained from Water Boiling Tests will be subjected to a wide range of calculations in order to determine a variety of useful parameters related to the stove performance. However, the input parameters are relatively few and the algorithms used are straightforward. It will therefore seem worthwhile to write a simple Basic program which first prompts for the few input parameters, does the necessary calculations and prints the input and processed data in tabular format as presented in the interim report. The two forms of particular relevance are the extra-wide table where each line corresponds to a single test, and Form 5(a) in Appendix A used to estimate cooking performance from WBT data. Here, individual tests are columns which for the computer program could easily be transposed into rows and the rows could then become additional columns of the two-page wide table. The width of the table becomes immaterial because the entire width can be stored in memory and printed out in convenient one-page wide chunks.

In fact, the entire table could possibly be done on Visicalc with less pain (than formatting tables using BASIC).

At the moment, I don't see any need to computerize the processing of WBT series data, partly because it will involve more complicated file handling, etc. The individual test data is just the right difficulty for Mohamed Hassan to learn computing without bashing his head against the wall.

APPENDIX C

HOUSEHOLD SELECTION FOR KITCHEN PERFORMANCE TEST IN LOWER SHABEELLE (NON-REFUGEE)

(Based on memorandum to Hank Cauley, December 23, 1983)

Melinda and I went through the Lower Shabeelle non-refugee data that showed a worse relationship to the number of people in the household than all other data sets. Anyway, Unit #5 107-133 seemed to belong to one group excluding households 101-106 where the data seemed to be artificial, and 1340-139, from a different population with substantially lower consumption.

From 1070-0133, the median household size is seven; first quartile at five, and third quartile at 10. I picked households between four and 12 and calculated a standard deviation of the daily fluctuation in wood consumption within each household. I noticed that the coefficient of variation (standard deviation/mean) values were typically between 0.1 and 0.15 for units 1070-0125 with a few below and above this value. However, for units 1260-0133, they were all below 0.1 and averaged 0.05. This seems very suspicious because #125 is also the changeover from one set of enumerators to another. The coefficients of variation for 1260-0133 all seem unusually low as far as I can recall from these data. I am therefore inclined not to include these households for a Kitchen Performance Test (KPT). This is contrary to what I had originally intended--which was to select households with small coefficients of variation.

The list of eligible households (of right sizes) between units 107 and 125 is attached (see Table C1). They divide as follows:

Sigaale - 6 households
Golweyn - 8 households

We should try to find about 10 volunteer households from this set, hopefully even numbers from both Sigaale and Golweyn (e.g., 4 and 6) and divide them randomly into two groups--a control and a test group.

I looked through the questionnaires for the households with coefficients of variation (#127-133). These households are all in another village (Buulo Mareerto) where the cooking pattern may be different and account for the low coefficients of variations. Also, the enumerators seemed very careful and noted additional comments, etc. It may well be that these

data show low coefficients of variation because they are exceptionally good data. I have therefore appended the six eligible households to my list. Four or all six of these households should also be selected for KPT--again divided randomly between test and control groups.

Thus, there will be a pool of 20 households from which to find volunteers--equal numbers in each group (control and test) from each village.

50

TABLE C1

Household Selection for Kitchen Performance Test

UNIT	QUESTIONNAIRE CODE	TOWN
108	BI2	Sigaale
109	BI3	Sigaale
110	BI4	Sigaale
111	BII1	Sigaale
112	BII2	Sigaale
114	BII4	Sigaale
116	C1	Golweyn
117	C2	Golweyn
118	C3	Golweyn
119	C4	Golweyn
120	C5	Golweyn
121	C6	Golweyn
123	C8	Golweyn
124	C9	Golweyn
The following have surprisingly low coefficients of variation from one day to the next, and are otherwise satisfactory:		
127	D3	Buulo Mareerto
128	D4	Buulo Mareerto
129	D5	Buulo Mareerto
130	D6	Buulo Mareerto
132	D8	Buulo Mareerto
133	D9	Buulo Mareerto

Source: Data file SHEBNR

5A

APPENDIX D

FORM 1(a)

WOOD STOVE
WATER BOILING TEST
DATA FORM

Test Number _____ Location _____

Date _____ Air Temperature _____ Wind _____

Stove _____ Relative Humidity _____

Tester _____ Stove Condition _____

Weight of Wood		Charcoal Remaining	Quantity of Water		Water Temperature		Time			
Initial	Final		Initial	Final	Initial	Final	Ignition	Pot Added	Water Boiled	End Test

STOVE AND POT DESCRIPTION

REMARKS

FORM 1(b)

CHARCOAL STOVE

WATER BOILING TEST

DATA FORM

Test Number _____ Location _____

Date _____ Air Temperature _____ Wind _____

Stove _____ Relative Humidity _____

Tester _____ Stove Condition _____

Weight of Charcoal		Quantity of Water		Water Temperature		Time			
Initial	Final	Initial	Final	Initial	Final	Ignition	Pot Added	Water Boiled	End Test

STOVE AND POT DESCRIPTION

REMARKS

FORM 2

VITA/SOMALIA WATER BOILING TEST SERIES BASIC DATA

Stove Name: _____ Material: Ceramic/Metal/Soapstone
Other _____

Brief description of stove features: _____

_____

Fuel: Wood/Charcoal Test numbers _____ to _____

Name(s) of tester(s): _____

Testing period (dates) from _____ to _____

TEST CONDITIONS

Air temperature: Max. = _____°C; Min. = _____°C; Mean = _____°C

Stove location: Outside sheltered on _____ sides; Inside

FUEL CHARACTERISTICS (Wood Only)

Moisture content (dry basis):

Max. = _____%; Min. = _____%; Mean = _____%

Typical length _____cm and diameter _____cm

Species (if known) _____

MEASURING DEVICES

Instrument	Range	Scale length or accuracy	Type, manufacturer
Balance No. 1	_____kg	_____cm	_____
Balance No. 2	_____g	_____cm	_____
Thermometer	_____°C	+/- _____	_____
Other: _____	_____	_____	_____

POT CHARACTERISTICS

Type: Cylindrical aluminum/other: _____

Diameter = _____cm; Height = _____cm; Capacity = _____ liters

Empty weight = _____kg Lid used for test: Yes / No

Water quantity in test = _____ liters or _____ kg

FORM 3

VITA/SOMALIA WATER BOILING TEST SERIES CONSUMPTION DATA

Refer to Form 2 for additional information of stove and test conditions

Total Number of Tests _____

	Mean	Standard Deviation	Coefficient of Variation	Standard Error of Estimation of Mean	95% Confidence Interval of Mean
Test Duration					
(from ignition) HP	_____	_____	_____	_____	_____
(from re-ignition) LP	_____	_____	_____	_____	_____
Test Duration					
(from pot addition) HP	_____	_____	_____	_____	_____
(from pot addition) LP	_____	_____	_____	_____	_____
Gross Wood Consumption (EDW, g)					
HP	_____	_____	_____	_____	_____
LP	_____	_____	_____	_____	_____
Total	_____	_____	_____	_____	_____
Net Wood Consumption (EDW, g)					
HP	_____	_____	_____	_____	_____
LP	_____	_____	_____	_____	_____
Total	_____	_____	_____	_____	_____
Gross Specific Consumption					
HP	_____	_____	_____	_____	_____
LP	_____	_____	_____	_____	_____
Overall	_____	_____	_____	_____	_____

53

FORM 3 (Cont'd)

	Mean	Standard Deviation	Coefficient of Variation	Standard Error of Estimation of Mean	95% Confidence Interval of Mean
PHU Including Evaporation					
HP	_____	_____	_____	_____	_____
LP	_____	_____	_____	_____	_____
Overall	_____	_____	_____	_____	_____
Wood Consumption Rate (g/min)					
HP	_____	_____	_____	_____	_____
LP	_____	_____	_____	_____	_____
Ratio HP/LP	_____	_____	_____	_____	_____
Water Heating Rate (W)					
HP	_____	_____	_____	_____	_____
LP	_____	_____	_____	_____	_____
Ratio HP/LP	_____	_____	_____	_____	_____

96

FORM 4

VITA/SOMALIA COMPARISON OF STOVE OPERATING CONDITIONS BASED ON WATER BOILING TEST DATA

Fuel: _____

Common features of stove and operating conditions for all tests on this comparison sheet (fill in as appropriate):

Stove: _____

Pots: _____

Water quantity: _____

Operating conditions: _____

Other: _____

Stove	Variable Operating Conditions	High Power PHU		Low Power SC	
		Mean	95% Confidence Interval	Mean	95% Confidence Interval

FORM 5(a)

VITA/SOMALIA

WATER BOILING TEST (WBT) DATA FOR CALCULATING COOKING PERFORMANCE

Stove name: _____ Fuel: _____

Pot: _____

HIGH-POWER PERFORMANCE							
	Test Number					Mean	Standard Deviation
	1	2	3	4	5		
Initial water (kg)						a=	
Final water (kg)							
Evaporation*(kg/h)						b=	
Time to boil (min)						c=	
Gross wood consumption rate (EDW, kg/h)						d=	
LOW-POWER PERFORMANCE							
Initial water (kg)							
Final water (kg)							
Evaporation (kg/h)						e=	
Gross wood consumption rate (EDW, kg/h)						f=	

* Assumes all evaporation takes place after water reaches boiling point.

FORM 5(b)

EXAMPLE OF COMPLETED FORM 5

WATER BOILING TEST (WBT) DATA FOR CALCULATING COOKING PERFORMANCE

Stove name: TCS (Ceramic) Fuel: Wood

Pot: _____

HIGH-POWER PERFORMANCE							
	Test Number					Mean	Standard Deviation
	1	2	3	4	5		
Initial water (kg)	2.5	2.5	2.5	2.5	-	a= 2.5	
Final water (kg)	-	2.375	2.26	2.21	-		
Evaporation(kg/15 minutes)	-	0.125	0.24	0.29	-		
Evaporation*(kg/h)	-	0.5	0.96	1.16	-	b= 0.88	0.34
Time to boil (min)	-	43	18	27	-	c=29.3	12.7
Gross wood consumption rate (EDW, kg/h)	-	0.435	0.747	0.625	-	d=0.602	0.157
LOW-POWER PERFORMANCE							
Initial water (kg)	-	2.375	2.26	2.21	-		
Final water (kg)	-	2.025	1.840	1.835	-		
Evaporation (kg/h)	-	0.35	0.42	0.375	-	e=0.382	0.035
Gross wood consumption rate (EDW, kg/h)	-	0.305	0.368	0.299	-	f=0.324	0.038

* Assumes all evaporation takes place after water reaches boiling point.

59

FORM 6

VITA/SOMALIA KITCHEN PERFORMANCE TEST (KPT) HOUSEHOLD LEVEL DATA

Household Number _____ Family Name _____

Location _____

Month and Year of Tests _____

Number of household members H= _____

Fuel used for tests: wood / charcoal

Other fuels used during test period:

	Fuel	Use
a.		
b.		
c.		

FUEL MEASUREMENTS

Date	Total Fuel Remaining in Inventory Area (kg)	Fuel Added to Inventory Area (kg)	Daily Fuel Consumption (kg/day)	Specific Daily Consumption (kg/person/day) F=C/H
Day 0	(none)	(A)		
Day 1	(B)		C=	
Day 2				
Day 3				
Day 4				
Day 5				
Day 6				
Day 7				
Day 8	(B)	(none)		

60

FORM 7

VITA/SOMALIA KITCHEN PERFORMANCE TEST (KPT) SERIES DATA

Fuel: Wood / charcoal Test supervisor: _____

Testing location: _____ Region: _____

Type of household: refugee camp / non-refugee rural / urban non Muqdisho / Muqdisho

Testing periods:

(1) _____ ; _____ (2) _____ ; _____
(month, year) (season) (month, year) (season)

Names of stoves compared: (1) _____ (old) (2) _____ (new)

Number of households in each group: _____

SPECIFIC DAILY CONSUMPTION (kg/person)

CONTROL GROUP STOVE 1 THROUGHOUT	Mean:	(A) _____	(C) _____
	Standard Deviation:	(S1) _____	(S3) _____
	Coefficient of Variation:	_____	_____
	Standard Error of Estimation of Mean:	_____	_____
	95% Confidence Interval:	_____	_____
	Total Number of Households:	(n1) _____	(n3) _____

		Stove 1	Stove 2
TEST GROUP (STOVE 1/ STOVE 2)	Mean:	(B) _____	(D) _____
	Standard Deviation:	(S2) _____	(S4) _____
	Coefficient of Variation:	_____	_____
	Standard Error of Estimation of Mean:	_____	_____
	95% Confidence Interval:	_____	_____
	Total Number of Households:	(n2) _____	(n4) _____

COMPARISONS

$$\% \text{ Reduction SDC from Stove 1 to 2 (unadjusted)} = \frac{B - D}{B} \times 100$$

$$\% \text{ Reduction SDC from Stove 1 to 2 (adjusted)} = \frac{BxC - AxD}{BxC} \times 100$$

$$\text{t-value of reduction in SDC} = \frac{B - D}{\left(\frac{(S2)^2}{n2} + \frac{(S4)^2}{n4}\right)^{1/2}}$$

Degrees of freedom = n2 + n4 - 2

Level of significance of reduction in SDC (from t-table) = (see VITA, 1982)

61

FORM 8

VITA/SOMALIA STOVE SCORECARD (PRELIMINARY)

Name of stove _____ Material: ceramic / metal / soapstone
other _____

Brief description of stove features: _____

_____

Fuel: wood / charcoal
Estimated retail price: _____ Somali Shillings
(In equivalent US$ _____)

High-Power Performance (PHU)

POOR	FAIR	GOOD	EXCELLENT

0 10 15 20 25 30 40 50

Low-Power Performance (GSC)

Kitchen Performance (SDC) kg/person/day

Range of stove surface temperatures (above ambient) when it is hottest (°C)

EXCELLENT	GOOD	POOR

0 30 70 100

Range of pot sizes (diameter in cm):

10 20 30 35

Ease of initial ignition:

Ease of sustaining ignition:

Perceived lack of fire risk (from flames):

Durability:

Speed of cooking:

Ability to cook all foods:

Smoke:

Appearance:

Discussion:

REFERENCES

"Cali Mataan Stove User Survey Questionnaire." VITA/Somalia, 1983.

"Cali Mataan Survey Final Report." VITA/Somalia, 1983.

Cauley, H. A. "Evaluation of Action Aid Mud Stove Pilot Project, Sections 1, 2 and 3, Sabacad Camp, NW Region." VITA/Somalia Memorandum, September 11, 1983.

____. Monthly Reports 1 - 5, May 1, June 1, July 1, August 1, September 1, 1983, VITA/Somalia.

____. "National Woodstove Program VITA/NRA/USAID Semi-Annual Report No. 1," VITA/Somalia, September 30, 1983.

Geller, H. S. "Prototype Metal and Mud Wood-Burning Cookstoves for Botswana." Associates in Rural Development Report, May 1983.

____. "Wood Stove Consultancy for the Botswana Renewable Energy Technology Project." Associates in Rural Development Report, May 1983.

Geller, H. S., and G. S. Dutt. "Measuring Cooking Fuel Economy." Wood Fuel Surveys. UNFAO/Rome, 1983.

Ouedraogo, I., G. Yameogo, and S. Baldwin, "Lab Tests of Fired Clay and Metal One-Pot Chimneyless Stoves." IVE/CILSS/VITA, February 1983.

Smale, M. "Trip Notes, Lower Shabelle." VITA/Somalia, September 1, 1983.

Smale, M. et al. "Cooking Practices and Fuelwood Consumption in Selected Sites of Lower Shabeelle, Banaadir, and Gedo Regions." VITA, February 1984.

"Testing the Efficiency of Wood-Burning Cookstoves--Provisional International Standards." VITA, Arlington, Virginia, December 1982.

"VITA Cooking Practices and Fuel Consumption Survey." VITA/Somalia, September 1, 1983.

"VITA Wood Stove Program--Sub-Project Description." VITA/Somalia, 1983.

REFERENCES (Cont'd.)

Yameogo, G., P. Bussman, P. Simonis, and S. Baldwin. "Comparison of Improved Stoves: Lab, Controlled Cooking, and Family Compound Tests." IVE/THE Eindhoven/GTZ/CILSS/VITA, May 1983.

Yameogo, G., I. Oeudraogo, and S. Baldwin. "Lab Tests of Fired Clay Stove, the Economics of Improved Stoves, and Steady State Heat Loss from Massive Stoves." CILSS/VITA, October 1982.

GLOSSARY

Stoves (Charcoal)

Kerocan	Kerosene Can Stove
1PSS	One Piece Soapstone Stove
2PSS	Two Piece Soapstone Stove
TSL	Traditional Soapstone Stove (Large)
TSS	Traditional Soapstone Stove (Small)
Umeme	Sheetmetal Stove (UNICEF/Nairobi Design)

Stoves (Wood)

CBS	Ceramic Bucket Stove (traditional ceramic stove built into metal bucket)
CGM	Non-template Ceramic Stove with Metal Grate (modification of earlier design)
Daallo	Double-walled Sheet Metal Stove (modification of SCM)
FCM	Foundry Cylindrical Metal Stove (similar to SCM but made with heavier guage metal)
FHIL	Food for the Hungry International-designed Ceramic Stove (Large)
FHIS	Food for the Hungry International-designed Ceramic Stove (Small)
NTCG	Non-template Ceramic Stove with Ceramic Grate
NTCNGL	Non-template Ceramic Stove without Grate (Large)
NTCNGS	Non-template Ceramic Stove without Grate (Small)
SCM	Short Cylindrical Metal Stove (also called Taleh Stove)
SSW	All Soapstone Stove with Built-in Soapstone Grate
SSWMG	Soapstone Stove with Metal Grate

3ST	Three-stone Fire (Traditional)
TCLS	Traditional Ceramic Stove, Lower Shabeelle
TCM	Template Ceramic Stove with Metal Grate (also called Shabeelle Stove; modification of CGM)
TCS	Template Ceramic Special Stove with Ceramic Grate (also called Jima Stove)

Testing Terminology

C	Celsius
CM	Centimeter
EDW	Equivalent Dry Weight
G	Gram
GSC	Gross Specific Consumption
HP	High Power (Phase of Water Boiling Test)
KG	Kilogram
KPT	Kitchen Performance Test
LP	Low Power (Phase of Water Boiling Test)
PHU	Percent of Heat Utilized
SC	Specific Consumption
SDC	Specific Daily Consumption
WBT	Water Boiling Test

66