PD-AAU-473

Project Planning Assistance

:o the

Ministry of Construction & National Housing

QUARTERLY REPORT NO 5

1 Jan 1984 - 31 Mar 1984

Richard M. Beardmore
613-0205-S-00-3001

CONTENTS

I. Introduction 1

II. Modus Operandi 2

III. Work Accomplished 3

IV. Issues Requiring Resolution 8

V. Proposed Work Program 8

Annexes

A. User's Guide to the Project Financial Planning System

B. Computer Model of Concrete Block-Making Process

C. Memo on Financial Control of Professional Fees

D. List of Allottees at P/F in February 1984

E. Summary Report on HG Program in Zimbabwe

INTRODUCTION

This report covers the activities of the Project Planning Advisor during the fifth full quarter of the implementation of the Limited Scope Grant Agreement for Technical Assistance to the Ministry of Construction & National Housing.

It should be noted that on 3 January 1984 the former Ministry of Housing was merged with the Ministry of Construction to form the new combined Ministry of Construction & National Housing (MCNH).

MODUS OPERANDI

The joining of the former ministries of Construction and Housing under Cde Mubengegwi signals approval at the highest level of the policy to emphasize the role of the public sector construction industry in the national economy. There are already indications that all government construction of single-storey buildings will be entrusted to some form of brigade. That is, it is likely that facilities such as schools and clinics will also now have to be built by brigade managed either by the Local Authorities or, indeed, even by the Ministry itself.

The sudden merger has diverted the attention of decision makers in Housing from day-to-day matters to those of defining the roles, functions, and structure of the combined portfolio. Over the past two months various departments have been physically moved from the Earl Grey building down to the Stables, as the offices of Construction are affectionately known. By the first week in April, all former MOH officers and advisors will have relocated. The combination of "merger meetings" attended by Dep Sec level officials and the physical movement of staff has created some element of disruption in the flow of work. The attempt to hold regular weekly meetings on USAID-related projects has not been as sucessful as hoped.

Nevertheless I have been able to maintain some continuity in the work as "co-ordinator". However this co-ordination has really only been achieved over technical matters within the TSD. Financial concerns such as issuing funds to Harare to keep Parkridge going rest with the Admin/Finance Department. Liaison with them has been difficult because of the Dep Sec's heavy schedule and his hesitancy to delegate decison-making powers to sub-ordinates. As we approach the end of the financial year, greater attention will be given to disbursing funds and less ambiguity will surround the amounts to be disbursed. This ambiguity also affects Marondera and Kadoma, both of which have been ready to receive funds since last November if not earlier.

WORK ACCOMPLISHED

The following description of work accomplished follows the terms of reference of my contract. Reference should be made to the Work Program contained in last quarter's report.

1. Assist MCNH to establish systems for project identification, feasibility analysis, and selection.

The Project Financial Planning System, develped as a manual method of documenting and analyzing the financial aspects of community development projects (See QR3 Annex A), was computerized in the process of preparing the PDP for the Second USAID HG Loan. Refer to section III of QR4 for a brief description of the system. A User's Guide was prepared this quarter to more fully explain the operation of the system. See Annex A to this report.

A computerized costing model of the process of making concrete blocks was developed this quarter to assist the Ministry to evaluate the efficiency of various block-making operations being established by Local Authorities under current MCNH policy to bolster public-sector construction efforts. See Annex B. An assessment of the efficacy of a Local Authority's block-making set-up is required as part of all applications for borrowing powers to determine the overall feasibility of a project for which loan funds are sought. The model uses MULTIPLAN to display all the relevant resources and their respective costs, combining them to produce the unit price of a block ex works. In practice, production processes in a number of towns exhibit performance standards far below those advocated by the model. The major problems stem from a) lack of incentives for the labour force who are permanent employees of the LA, and b) lack of supervision to ensure that the concrete is properly mixed. Annex B contains assessments for Kwekwe and Gweru. Intensive investigations have begun into Harare's block-making operations as a result of their proposed price of $0.45 per block compared with the private sector price of $0.35.

2. Co-ordinate with other donors to ensure rational use of scarce resources.

Orders for all commodities to be procured in the USA have been placed by USAID/Harare. During the quarter, the following items were received:

Canon NP400 photocopier

Facit 8111 electronic typewriter

Photographic equipment from Justesens

All goods received so far have been is serviceable condition except for the Bell & Howell RM850 slide/sound projector which had obviously received a swift kick in the side since its dispatch from Justesens. The USAID Mission is pursuing the matter.

The consignment from Brodhead-Garrett is still awaited. The typewriter and photographic equipment are now being used on site at the Parkridge / Fontainbleau project. The copier remains at MCNH HQ.

3. Provide recommendations to MCNH based on analysis of critical constraints in the low-cost shelter delivery system.

Recommendations were made in respect of the concrete block-making operations being established around the country, including the four towns involved in the HG Program. See item 1 above and Annex B.

Bottle-necks encountered in the cadastral survey of Parkridge/Fountainbleau has led to consideration being given to alternative methods of plot demarcation in future projects. A paper on this subject is being prepared and will be finalized during the next quarter. The problem revolves around the insufficient number of qualified land surveyors in the country, the difficulty in installing infrastructure without disturbing cadastral beacons, and the requirement that all stands be fully beaconed before allocation.

Under current MCNH policy, all houses must have a properly constructed "wet core" consisting of toilet, shower, and wash basin, with the first two items located in separate rooms and sufficient space left over to eventually accommodate a full-size bath tub. Several allottees at P/F have requested house plans which offer a more modest wet core with provision for expansion. An indicative house plan with such an arrangement is being prepared for consideration by the Ministry with a view to modifying the policy. Final details will be include in next quarter's report.

Recommendations were made concerning the manner in which accounting records were being kept on expenditures incurred in respect of consultants engaged on Parkridge/Fontainbleau. See Annex C.

4. Assist with developing monitoring and evaluation systems.

No major tasks were undertaken on this item. However information on the subject was passed to the City of Harare in response to a request from the Department of Community Services. Their monitoring systems appear well geared to track physical progress on allocations and loan disbursements. See Annex D for a typical report on the beneficiaries who received plots during the month ending 29 February 1984.

Financial monitoring of MCNH expenditure and disbursements is continuing with the use of the PFPS. See Annexes A and E.

5. Assist with project implementation.

I continued to co-ordinate all techncial activities within the Ministry. A summary progress report on all components of the HG program is presented below.

1. Parkridge / Fontainbleau Phase I

A. Project Delivery Plan

The revised document of 26 January 1984 was approved by USAID. They advised the Ministry in their letter dated 26 March 1984 that authority had been given to the escrow agents in New York to release US$ 2 million. A further US$ 2 million would be released upon USAID's receipt of a) confirmation that GOZ counterpart contribution had been budgeted for, b) a list showing income distribution of allottees to date at P/F, and c) evidence that the unliquidated advance of Z$ 558,000 had been spent. MFEPD to contact the escrow agent to arrange for disbursement.

B. Allocations

A total of 819 stands had been allocated as of 28 March 1984. The average daily rate of allocations has risen to about 50 per day with distinct peaks immediately after pay day. All stands that have been cadastrally surveyed have been allocated. The Site Team is now allocating unbeaconed stands which nevertheless can be identified from provisional General Plans. The Surveyor-General has instructed two land surveyors to carry out beaconing in Phase I. A third will be instructed in April 1984. It has become evident that the rate of allocations will always exceed the rate of beaconing. This will require close liaison between the Site Team, John Burrows, the Surveyor General, and MCNH if mistakes are to be avoided in identifying stands for purposes of drawing up Agreements of Sale with beneficiaries.

C. Loan Programme

A programme of cash loans to allottees is under way with the disbursement of the first cheques to plot developers taking place in the last week of March. Demand for loans is currently low.

D. House Construction

Several stands are being cleared of grass and numerous foundations are being dug. Setting out of houses is taking place under the supervision of Building Liasion Officers (BLO's). About 250 model house plans have been sold.

E. Administration Centre

This complex is virtually complete except for the surfacing of the stores yard. Handover from MCNH to COH is set for 2 April 1984. Site staff are to occupy the buildings on April 14 1984.

F. Funding

COH has requested funds in the amount of Z$ 4.7 million to support further project activity. MCNH is expected to disburse this money in the first week of April.

G. Project Oversight Committee

The fifth POC meeting was held on 22 March 1984. Minutes are being prepared by Cde Sibanda of the Policy Department.

H. Infrastructure

JBP are continuing to prepare a set of "as-built" drawings for services in Phase I. They are also preparing additional and amending layouts for plots affected by poor soil conditions. They have been advised of the minimum and maximum size of plots to include in this exercise. Tenders for the servicng of the shopping centres were advertised in the Herald on 23 March 1984. Construction is expected to start in mid-May at an estimated cost of Z$ 635,000.

2. Parkridge / Fontainbleau Phase II

A. Project Delivery Plan

The PDP for this phase was completed and approved by MCNH on 29 March 1984. It was transmitted to MFEPD on that date. A copy is to be sent to COH for their review.

B. Infrastructure

JBP has been requested to supply MCNH with a programme for the completion of infrastructure in Phase II. According to the current programme all works were to be complete at the end of March. At the present rate of stand allocation in Phase I, GOH could preceed with stands in Phase II as early as June 1984, two months ahead of schedule. COH is to approach MCNH re: drainage at the south end of Phase II near units 5 and 6 South. The resolution of the problem is tied to the proposed developent of the Crowborough Farm as a residential area in a few years time.

3. Secondary Towns

A. Project Delivery Plans

The PDP referred to in 2.A above covers these three projects. A copy of the relevant portions of the PDP will be sent to each town for their information and review.

B. Funding

Applications for borrowing powers for Marondera and Kadoma were recevied on June 30 1983 and Novemeber 15 1983 respectively. They have both been approved by TSD and should now be referred to MLGTP, if this has not already been done. MCNH has Z$ 345,000 this year for these three schemes, some of which may be disbursed to enable the constructrion of infrastructure to begin before the end of the financial year.

C. Infrastructure

Engineering designs for the Chinhoyi scheme's infrastructure were informally submitted to TSD by the Town's engineering consultants for review and comment. A meeting to be arranged with the Town Engineer and Sir MacDonald & Partners in early April to discuss.

D. Visits to Secondary Towns

A visit was made to Chinhoyi on 23 January with the Director, TSD to review all housing operations of the Municipality, including progress on the HG program. A detailed review of the on-going brigade efforts was made and several recommendations made to the Town Clerk. It appeared as if there was a critical lack of supervision on site, both at the block slab and on the construction site itself. There were indications that cost targets were not being met, with unit costs exceeding the budget by as much as Z$2,000, i.e., 40%. There seemed to be very little control on the use of materials on-site. Chinhoyi's brigade had expanded to a level of over 200 workers with deleterious results on the labour budget. To date, the town has not submitted any formal documents in respect of the HG program. The information in the draft PDP was based on informal submissions from the towns engineering consultants and discussions with Municipal officers. A rather inauspicious beginning in Chinhoyi.

4. External Evaluation of USAID Efforts at MCNH

An evaluation of the USAID HG program, involvement in the UNDP/MCNH pilot projects at Kwekwe and Gutu, and the program of technical assistance to MCNH was carried out from 20 February to 8 March. Ms Barbara Washington from AID/W and consultant Eric Peterson spent three intensive weeks collecting information pertaining to all three areas of concern. Their report is awaited.

6. Assist MCNH to determine need for short-term TA

No action this quarter.

7. Prepare draft TORs for short-term TA

No action this quarter.

8. Participate in forward planning

I undertook the finalization of the PDP for the second loan based on comments from Ministry officials. The document was based on my planning report submitted as Annex A of QR3. There was no particiaption by the Ministry in the actual preparation of the Plan, i.e., no counterpart involvement.

ISSUES REQUIRING RESOLUTION

The Second PDP contains Z$8 million worth of work requiring GOZ counterpart funding, all of which is above and beyond the requirement of the Implementation Agreement. This sum includes Z$ 3,458,000 to cover the cost of building rental accomodation on 10% of all serviced plots, in keeping with MCNH policy. It also includes Z$ 4,650,000 deemed to be required to allow all allottees to draw down the maximum loan of Z$ 3100. TheMinistry has insisted on the inclusion of the items because they are "policy". It is maintained that it is MFEPD's problem to find the necessary funding. It is well known that MFEPD is concerned about the growing commitment required by GOZ to provide counterpart funding for donor-aided projects. To date they have not requested MCNH to reduce their requests for funds. Rather they talk in terms of re-scheduling the project, i.e., delaying implementation until such time as the local funding becomes available. This is an issue which USAID/Harare and RHUDO should take up with MFEPD in the course of making discrete inquiries into the progress achieved in reviewing the document.

PROPOSED WORK PROGRAM

1. Finalize paper on alternative procedure for surveying stands.

2. Finalize proposal for step-wise development of wet core within a four-roomed house.

3. Review engineering design of Chinhoyi services with Municipality and Consultant Engineers.

4. Continue co-ordination of technical activities of MCNH.

5. Attend Ninth USAID Conference on Housing in Africa in Dakar, Senegal, with Mr Bera, Chief Mechanical Engineer of the former Ministry of Construction.

Annex A

USER'S GUIDE

PROJECT FINANCIAL PLANNING SYSTEM

FOR

LOW-INCOME COMMUNITY DEVELOPMENT SCHEMES

Technical Services Department

Ministry of Construction & National Housing
Harare Zimbabwe

March 1984

9

CONTENTS

1.	INTRODUCTION	1
2.	SYSTEM DESCRIPTION	1
	a. Financial Control Chart	2
	b. Capital Budget	3
	c. Financing Plan	4
	d. Cash Flow	5
	e. Implementation Schedule	6
	f. Monthly Charges	7
3.	CHANGES IN PROJECT DESIGN	8
4.	SOME SUMMARY TABLES	8

10

1. INTRODUCTION

This guide explains how to use the Project Financial Planning System for the documentation, analysis, and monitoring of the financial aspects of housing projects sponsored by the Ministry of Construction & National Housing.

The system produces four inter-related tables concerning financial control, capital budgeting, financing plans, and cash flows for each project. Two additional tables are produced showing monthly charges payable by project participants and the proposed implementation schedule for the project. The process of "designing" the financial framework of a project requires developing these tables in an iterative or cyclical manner whereby successive approximations of affordable shelter solutions are estimated and used as a basis for capital budgeting, finance planning and projecting cash flows or disbursements.

The system uses an Apple IIe microcomputer with 64 kilobytes of memory, two disk drives, a wide carriage dot matrix printer and a CP/M operating system. The computer program is based on the use of Microsoft's **MULTIPLAN** electronic spreadsheet software package.

The operation of this system presupposes a knowledge of how to use **MULTIPLAN** on an Apple IIe computer. Reference should therefore be made to Microsoft Corporation's **Microsoft Multiplan for the Apple IIe Manual** as required.

Note: The following trademarks are registered and represent copyrighted software products which are commercially available. **CP/M** is a registered trademark of Digital Research and **MULTIPLAN** is a registered trademark of Microsoft Corporation.

2. SYSTEM DESCRIPTION

The Project Financial Planning System (PFPS) consists of a set of inter-related tables displaying different aspects of the financial framework of a project. The information contained in the tables can be displayed at different levels of detail and summary tables can be used to aggregate financial information about a number of different projects.

The relationships between these tables for a single project are illustrated in Figure 1.

Four tables are interlinked by the computer in such a way that a change in the financial information on the Financial Control Chart automatically induces a corresponding change in the Capital Budget, the Financing Plan, and the Cash Flow. Two additional tables are interlinked manually with these four tables: the Implementation Schedule and the Table of Monthly Charges. These relationships will become more clear after describing the nature of each table in detail.

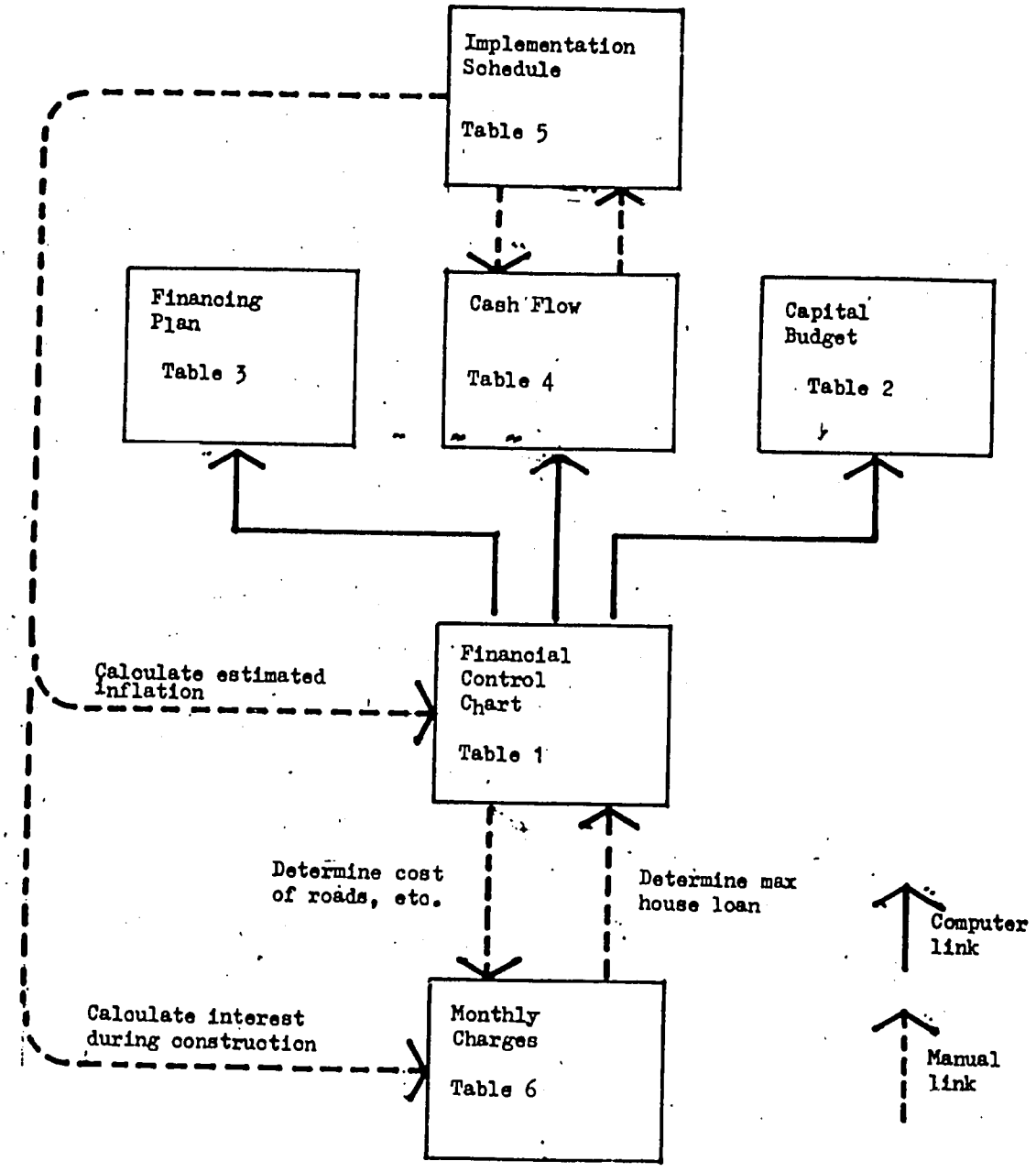

FIGURE 1. Relationships between tables for a single project

a. Financial Control Chart

The heart of the system is the Financial Control Chart (FCC). Table 1 illustrates a typical FCC for a hypothetical project.

This table displays the elements of a project at their greatest level of detail. A project element could be a specific contract for a particular piece of infrastructure, a commission given to a specific consultant, or any other item of work. Project elements, grouped by components, are described using up to 30 characters in column 1 of the FCC. Column 2 contains the estimated total cost of the element in Z$ at a specific point in time. Column 3 records the amount spent on each item up to the end of the previous financial year. Column 4 displays what sum of money has been allocated for expenditure in the current financial year. Columns 5 through 11 record actual expenditure in the current year. Column 12 displays expenditure to date since the beginning of the project. The bottom line of the FCC records the exchange rate to be used to convert donor funds into Zimbabwe currency. Note that the FCC itself does not display units of foreign currency but stores the exchange rate merely for use in calculating the conversion needed in other tables.

TABLE 1. Nyameni Financial Control Chart

PROJECT COMPONENT	ESTIMATE Z$	SPENT TO 30.6.83	ALLOCATION 83/84	SPENT 83/84 TO 31.12.83	MONTHLY EXPENDITURE JAN 84	FEB 84	MAR 84	APR 84	MAY 84	JUN 84	OVERALL EXP TO DATE
A. LAND											
1. Acquisition	31,000										0
2. Survey	35,000										0
Sub-total	66,000	0	0	0	0	0	0	0	0	0	0
B. PRIMARY INFRASTRUCTURE											
1. Roads & stormwater drains	47,000										0
2. Bulk water supply	33,600										0
3. Trunk sewer & treatment	40,000										0
Sub-total	140,600	0	0	0	0	0	0	0	0	0	0
C. SITE SERVICING											
1. Roads & drains	530,000										0
2. Water & sewers	420,000										0
3. Tower / street lights	140,000										0
Sub-total	1,090,000	0	0	0	0	0	0	0	0	0	0
D. HOUSE CONSTRUCTION											
1. Capital for house loans	2,889,200										0
2. Construction of rental	515,000										0
Sub-total	3,404,200	0	0	0	0	0	0	0	0	0	0
E. COMMUNITY FACILITIES											
1. Primary school	350,000										0
2. Secondary school	820,000										0
3. Health centre	40,000										0
4. Market / Toilet	40,000										0
5. Admin / community	250,000										0
6. Demonstration houses (6)	21,000										0
Sub-total	1,561,000	0	0	0	0	0	0	0	0	0	0
F. TECHNICAL ASSISTANCE											0
1. Project administration	88,000										0
2. Professional fees	0										0
Sub-total	88,000	0	0	0	0	0	0	0	0	0	0
TOTAL EXCLUDING CONTINGENCIES	6,349,800	0	0	0	0	0	0	0	0	0	0
G. CONTINGENCIES											
1. Physical	265,100										0
2. Price (inflation)	795,300										0
Sub-total	1,060,400										0
GRAND TOTAL	7,410,200	0	0	0							0

Assumes an exchange rate of 0.92 to the Z$

b. Capital Budget

The Capital Budget Table displays the estimated total cost of each project component broken down into sub-components or even elements. Generally the list of items is not as detailed as that given in the Financial Control Chart. Where responsibility for executing the works is divided between two or more agencies, column 2 will identify these authorities using a 3- or 4-letter abbreviation, e.g., MCNH, COH. The final two columns give the estimated total cost of each item in the list in Zimbabwe dollars and the units of foreign currency (where applicable). All figures displayed in this chart are derived electronically from the FCC.

Refer to pages 271 - 272 and 302 - 305 of the **MULTIPLAN** Manual for an explanation of the way in which tables are linked to one another. Figures in Z$ are copied from the supporting table whereas figures in units of foreign currency are calculated as the product of the Z$ amounts and the exchange rate given in the FCC. Sub-totals in the Capital Budget are calculated by the computer when processing the Table for display on the monitor. Figures which are sub-totals in the FCC but which are displayed as a summary line item in the Budget are copied from the FCC.

TABLE 2. Nyameni Capital Budget[1]

July 1983 prices

PROJECT COMPONENT	ESTIMATE Z$	ESTIMATE US$
A. LAND		
1. Acquisition	31,000	28,520
2. Survey	35,000	32,200
Sub-total	66,000	60,720
B. PRIMARY INFRASTRUCTURE		
1. Roads & stormwater drains	67,000	61,640
2. Bulk water supply	33,600	30,912
3. Trunk sewer & treatment	40,000	36,800
Sub-total	140,600	129,352
C. SITE SERVICING		
1. Roads & drains	530,000	487,600
2. Water & sewers	420,000	386,400
3. Tower / street lights	140,000	128,800
Sub-total	1,090,000	1,002,800
D. HOUSE CONSTRUCTION		
1. Capital for house loans	2,889,200	2,658,064
2. Construction of rental	515,000	473,800
Sub-total	3,404,200	3,131,864
E. COMMUNITY FACILITIES		
1. Primary school	350,000	322,000
2. Secondary school	820,000	754,400
3. Health centre	60,000	55,200
4. Market / Toilet	60,000	55,200
5. Admin / community	250,000	230,000
6. Demonstration houses (6)	21,000	19,320
Sub-total	1,561,000	1,436,120
F. TECHNICAL ASSISTANCE		
1. Project administration	88,000	80,960
2. Professional fees	0	0
Sub-total	88,000	80,960
TOTAL EXCLUDING CONTINGENCIES	6,349,800	5,841,816
G. CONTINGENCIES		
1. Physical	265,100	243,892
2. Price (inflation)	795,300	731,676
Sub-total	1,060,400	975,568
GRAND TOTAL	7,410,200	6,817,384

*Assumes an exchange rate of 0.92 to the Z$

c. Financing Plan

The Financing Plan shows what components of a project are financed by the various sources of funds, e.g., Government, donor agency, local authority, building society, etc.

Column 1 displays the components or elements of the project grouped by source of funds. Columns 2 and 3 show the amount of each item funded by the source in Z$ and units of foreign currency respectively. Column 4 displays the percentage each source of funds contributes to the project. As with the Capital Budget table, the figures in the Financing Plan are copied automatically from the FCC when the computer is getting ready to display the Plan.

TABLE 3. Nyameni Financing Plan

SOURCE OF FUNDS	TOTAL Z$	TOTAL US$*	PERCENT
1. USAID HG PROGRAMME			
A.2 Land survey	35,000	32,200	
C Site servicing	1,090,000	1,002,800	
D Capital for house loans	2,889,200	2,658,064	
E Community facilities	1,561,000	1,436,120	
Subtotal	5,575,200	5,129,184	75%
2. GOVERNMENT OF ZIMBABWE			
B Primary infrastructure	140,600	129,352	
D Rental housing	515,000	473,800	
O Contingencies	1,060,400	975,568	
Sub-total	1,716,000	1,578,720	23%
3. MUNICIPALITY OF MARONDERA			
A.1 Land acquisition	31,000	28,520	
F Technical assistance	88,000	80,960	
Subtotal	119,000	109,480	2%
GRAND TOTAL	7,410,200	6,817,384	100%

*Assumes an exchange rate of 0.92 to the Z$

d. Cash Flow

The fourth inter-related table is the Cash Flow. This table can be thought of as a Financing Plan with a time dimension.

Column 1 resembles that of the Financing Plan except that it has two additional sub-total rows for each source of funds. Column 2 reflects the estimated total costs given in column 2 of the FCC. Column 3 shows expenditure to date as given in column 12 of the FCC. Column 4 displays the unspent balance of each item expressed in thousands of Z$. It is calculated as the difference between columns 2 and 3, divided by 1000. The remaining columns are reserved for the forecast expenditure of the balance of each item over the period shown, given in quarters. These figures are inserted by the system operator who needs to consult the proposed Implementation Schedule. The sum of all the forecast figures in any given row starting in Column 5 should add up to the figure in Column 4. The column at the extreme right hand side of the chart is displayed on the monitor only and is used as a check column to ensure that the horizontal totals are correct before printing the chart.

TABLE 4. Nyameni Quarterly Cash Flow

SOURCE OF FUNDS	TOTAL Z$	EXPENDITURE 31.12.83	BALANCE (000's)	FY 83/84 3	FY 83/84 4	FY 84/85 1	FY 84/85 2	FY 84/85 3	FY 84/85 4	FY 85/86 1	FY 85/86 2	FY 85/86 3	FY 85/86 4
1. USAID HG PROGRAMME													
A.2 Land survey	35,000	0	35	35									
C Site prep & servicing	1,090,000	0	1,090		270	270	270	280					
D Capital for house loans	2,889,200	0	2,889				412	412	412	412	412	412	417
E Community facilities	1,561,000	0	1,561				312	312	312	312	313		
Sub-total	5,575,200	0	5,575	35	270	270	994	1,004	724	724	725	412	417
Cumulative forecast for FY				35	305	270	1,264	2,268	2,992	724	1,449	1,861	2,278
Cumulative forecast for project				35	305	575	1,549	2,573	3,297	4,021	4,746	5,158	5,575
2. GOVERNMENT OF ZIMBABWE													
B Primary infrastructure	140,400	0	141	70	70								
D House construction Construct rental	515,000	0	515			171	171	173					
G Contingencies	1,060,400	0	1,060		150	150	150	150	150	150	148		
Sub-total	1,716,000	0	1,716	70	220	321	321	323	150	150	148	0	0
Cumulative forecast for FY				70	290	321	642	965	1,115	150	310	310	310
Cumulative forecast for project				70	290	611	932	1,255	1,405	1,555	1,715	1,715	1,715
3. HARONDERA MUNICIPALITY													
A.1 Land acquisition	31,000	0	31	31									
F Technical assistance	88,000	0	88			11	11	11	11	11	11	11	11
Sub-total	119,000	0	119	31	0	11	11	11	11	11	11	11	11
Cumulative forecast for FY				31	31	11	22	33	44	11	22	33	44
Cumulative forecast for project				31	31	42	53	64	75	86	97	108	119
GRAND TOTAL	7,410,200	0	7,410	136	490	602	1,326	1,330	885	885	891	423	428
CUMULATIVE FORECAST FOR FY				136	626	602	1,928	3,244	4,151	885	1,781	2,204	2,632
CUMULATIVE FORECAST FOR PROJECT				136	626	1,228	2,554	3,892	4,777	5,662	6,558	6,981	7,409

16

e. Implementation Schedule

Figure 1 shows two tables which are manually linked to the preceding four financial tables. The Implementation Schedule has already been mentioned in connection with the Cash Flow. Column 1 of the Schedule displays the project components expressed as activities. The estimated start date, duration, and completion date of each activity is plotted by month in the form of a bar or Gantt chart. This chart becomes the basis for estimating the amount of interest which may be expected to accrue during the construction period. This sum, though not an actual disbursement of cash, is required in the calulation of the plot development cost in order to recover the full cost of developing stands from the beneficiaries. The Schedule can also be used to estimate the effect of price inflation on the cost of the works, information which can be fed back into the Budget table to refine the estimated total cost of the project.

TABLE 5. Nyameni Implementation Schedul

PROJECT COMPONENT		FY 83/84 QUARTER				FY 84/85 QUARTER				FY 85/86 QUARTER			
		1	2	3	4	1	2	3	4	1	2	3	4
A. LAND													
1. Acquisition	X												
2. Survey			XXX										
B. PRIMARY INFRASTRUCTURE													
1. Roads & Stormwater drains		XXX	XXX	XXX									
2. Bulk water supply		XXX	XXX	XXX									
3. Trunk sewer & treatment		XXX	XXX	XXX									
C. SITE SERVICING													
1. Roads & drains				XXX	XXX	XXX	XXX						
2. Water & sewers				XXX	XXX	XXX	XXX						
3. Tower lights						XXX	XXX						
4. Electricity						XXX	XXX	XXX					
D. HOUSE CONSTRUCTION													
1. Aided self-help units						XXX	XXX	XXX	XXX	XXX	XXX	XXX	XXX
2. Rental units					XXX	XXX	XXX						
E. COMMUNITY FACILITIES													
1. Primary school						XXX	XXX						
2. Secondary school							XXX	XXX	XXX				
3. Health centre								XXX	XXX	XXX			
4. Market / toilet						XXX	XXX						
5. Admin / community centre								XXX	XXX	XXX			
6. Demonstration houses (6)					XXX								
F. TECHNICAL ASSISTANCE													
1. Beneficiary selection				XXX	XXX								
2. Plot allocation					XXX	XXX							
3. Stores operation						XXX	XXX	XXX	XXX	XXX	XXX	XXX	XXX
4. Technical advice						XXX	XXX	XXX	XXX	XXX	XXX	XXX	XXX
5. Staff training				X	X	X	X	X	X	X	X	X	X
6. Monitoring & evaluation				X	X	X	X	X	X	X	X	X	X

f. Monthly Charges to Beneficiaries

The second table manually linked to the Financial Control Chart is the Monthly Charges Table. This chart computes the monthly cost of the various shelter solutions offered in a project. These charges include repayments on plot and construction loans as well as monthly service charges for water, sewerage, refuse removal, etc. Where the choice of a shelter option is governed by affordability, this table can be used to determine the maximum construction loan affordable by a household earning the maximum eligible income. This is done by specifying the proportion of household income which should be spent on housing and related services. The amount of money left over each month after paying for plot and service charges can be used to amortize a loan for house construction. The terms of the loan dictate how much money can be borrowed. This calculation has a bearing on how much capital will be required to fund all construction loans. This effects the FCC which in turn effects the three other dependent tables.

TABLE 6. Nyameni Monthly Charges

Annual interest	9.75		
Years to repay plot	30	CRF(PLOT)	0.008592
Years to repay loan	25	CRF(LOAN)	0.008911

ITEM	Plot only	Plot & ave loan	Plot & max loan
A. Plot and loan charges			
1. Average plot cost	577.00	577.00	577.00
2. Amount of building loan	0.00	2275.00	3100.00
3. Sub-total (1+2)	577.00	2852.00	3677.00
4. Deposit paid	28.85	28.85	28.85
5. Loan to repay (3-4)	548.15	2823.15	3648.15
Monthly loan payments	4.96	25.23	32.58
B. Service charges			
1. Homeownership admin charge	0.00	0.00	0.00
2. Sewerage	2.65	2.65	2.65
3. Refuse removal	1.00	1.00	1.00
4. Minimum water charge	3.70	3.70	3.70
5. Supplementary charge	2.50	2.50	2.50
Total monthly service charges	9.85	9.85	9.85
C. Total monthly cost (A+B)	14.81	35.08	42.43
D. Minimum required income per household	53.84	127.57	154.30

18

3. CHANGES IN PROJECT DESIGN

By now the linkages between tables will have become more clear. The real value of the PFPS is demonstrated when there is a requirement to change one or more figures in the FCC. Such changes come about because of refinement in cost estimates, fluctuation of exchange rates, delays in the execution of work, and many other reasons. In addition there may be a need to explore alternative policy options on the basis of "what if?" questions. What if we introduce a deposit on construction loans? What if interest rates on construction loans were increased to 12.5%? What would the effect of these changes be on the financial design of the project? The PFPS, being a financial model of the project, allows the planner to investigate proposed policy changes such as these quickly and accurately. Changing a figure in column 2 of the FCC automatically leads to a recalculated total on the Chart as well as corresponding amendments to the three other computer-linked tables. Understanding the logical relationship between the tables is necessary to investigate the effect of changes. Sometimes the impact of a change is first identified in the Monthly Charges Table (i.e., increase interest rate on house loans) or Implementation Schedule (i.e., delay start of project by 6 months). This would necessitate some manual calculations before the relevant change could be made to the FCC, as discussed in the last section.

4. SOME SUMMARY TABLES

Where a number of individual projects are funded from the same source or are part of the same programme, it is often useful to create tables which summarize this information. **MULTIPLAN** and the PFPS allow for the construction of such tables. Figure 2 illustrates schematically how this is achieved with respect to the Financing Plan. The sub-totals in the individual Financing Plans are linked to the main entries on the summary Plan.

TABLE 7. Summary Project Financing Plan

	HARARE		MARONDERA		KADOMA		CHINHOYI		TOTAL	
	Z$	US$	Z$	US$	Z$	US$	Z$	US$	Z$	US$
USAID HG PROGRAM	13,668,143	12,574,492	5,575,200	5,129,184	5,422,570	4,988,764	2,508,000	2,307,360	27,173,913	25,000,000
GOVERNMENT OF ZIMBABWE	11,398,857	10,484,948	1,714,000	1,578,720	1,578,000	1,451,760	750,000	690,000	15,442,857	14,207,428
LOCAL AUTHORITY	433,000	398,360	119,000	109,480	32,000	29,440	56,000	52,256	640,000	589,536
TOTAL	25,500,000	23,460,000	7,410,200	6,817,384	7,032,570	6,469,964	3,314,000	3,049,616	43,257,570	39,796,964

Assumes an exchange rate of US$ 0.92 to the Z$

19

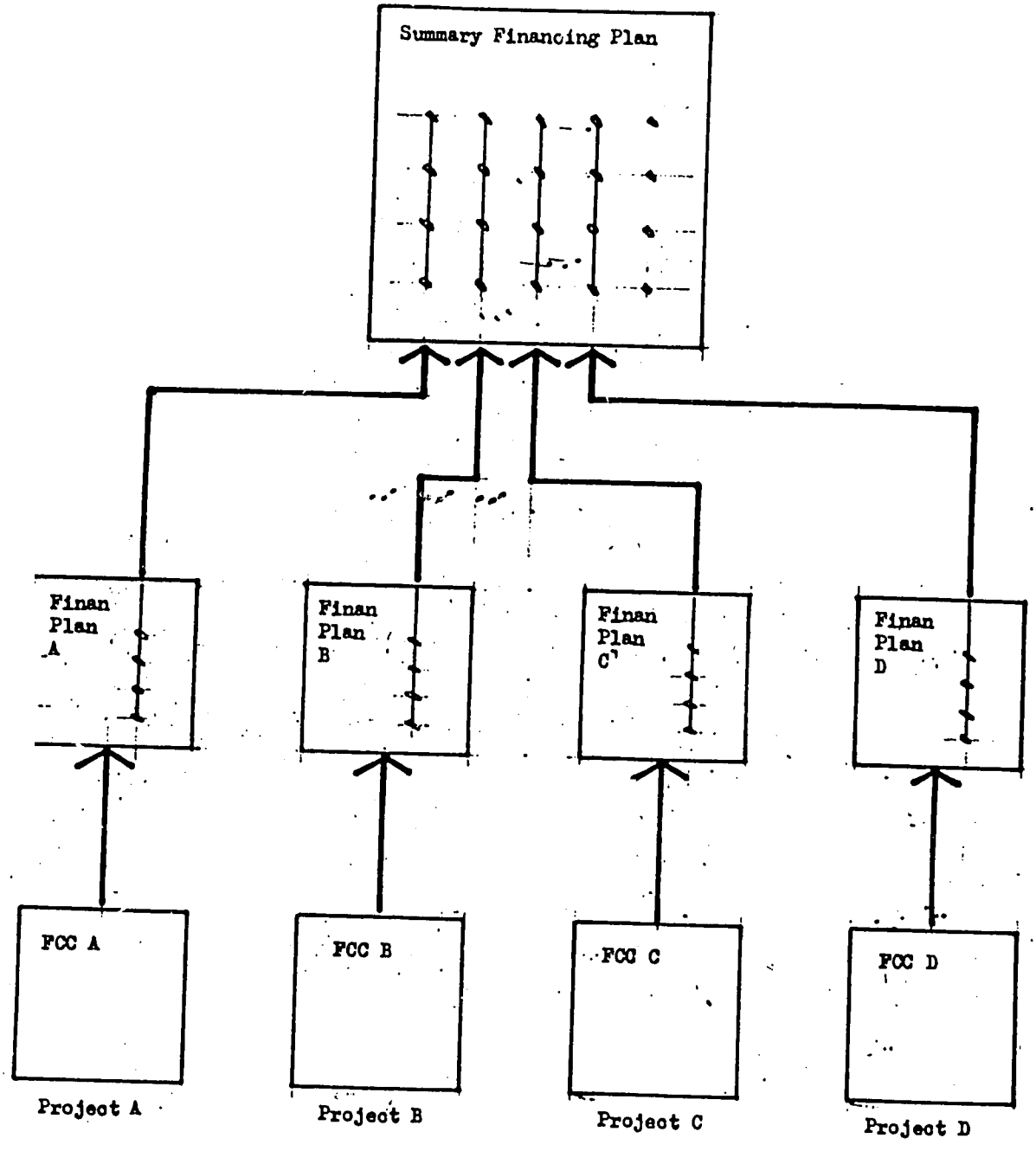

FIGURE 2. Relationships between project tables and summary table

A MODEL OF CONCRETE BLOCK MAKING PROCESS: 'FOUR MACHINE' SET-UP

5 MAR 1984

Objective: To determine unit production cost of 115mm block in year 1 given parameters of semi-automative process as follows

1. SCOPE OF OPERATIONS

How many blocks required (including wastage)?	1,260,000
How many blocks per year	1,260,000
How many working days per year?	210
How many blocks per actual working day?	6,000

2. SITE ESTABLISHMENT & MAINTENANCE

A. Capital costs		Tot cost	Life(yr)	AC
a. Access roads		0	10	0
b. Security fencing		0	10	0
c. Security lighting		0	8	0
d. Water connection & reticulation		0	20	0
e. Sewer connection & reticulation		0	20	0
f. Working area (slab)		5,000	40	125
g. Covered area for plant		0	20	0
h. General store & office		0	20	0
i. Toilets & changing rooms		0	20	0
j. Power supply & distribution		0	20	0
Total		5,000		125
Annual maintenance cost (Z) in Year 1	0	0%		1,500
TOTAL SITE ESTABLISHMENT & MAINTENANCE				1,625

3. PLANT REQUIREMENT & MAINTENANCE

A. Capital costs	Qty	Unit cost	Tot cost	Life(yr)	AC
a. Block making machines	4	4,000	16,000	10	1,600
b. Molds 115mm	4	520	2,080	3	693
c. Pan mixers (size:7/5)	4	4,400	17,600	10	1,760
d. Trollies, platform	4	260	1,040	10	104
e. Loose tools	1	500	500	1	500
f. Dumpers	0	0,000	0	5	0
g. Other					
Total			37,220		4,657
Annual maintenance cost (Z) in Year 1	2%				744
TOTAL PLANT REQUIREMENT & MAINTENANCE					5,402

4. ANNUAL LABOUR REQUIREMENT

A. Wages & salaries	Qty	Rate/hour	Rate/m	AC
a. Brigade foremen (20% of his time)	1	5.75		2,705
b. General workers	35		115.00	48,300
c. Fitters	0	5.60		0
d. Clerks (10% of his time)	1		165.00	198
e. Others	0	0.00		0
Total	37			51,203
B. On-costs				
Pension & other emoluments	54%			27,650
Insurances				500
Petrol, oil, & lubricant				0
Protective clothing				1,110
Central administration				1,200
Sundry other expenses				400
Total				30,960
TOTAL LABOUR REQUIREMENT				81,662

5. MATERIAL REQUIREMENTS

Net volume of block calculated as follows

Gross volume	1	115	450	225	0.01164
Less volume of two voids	-2	43	185	225	0.00358
Net volume of a 115mm block					0.00806

Recall number of blocks per year	1,260,000
Therefore volume of concrete per year in cubic metres	10,161

Assume mix of 1:7:3 and 38 sacks cement per cubic metre

Material	Ratio	m3	sacks	rate	AC
Cement	13.92	1,414.36	42,431	2.88	122,320.09
Sand	100.00	10,160.64		14.30	145,297.15
Aggregate	40.00	4,064.26		14.05	57,102.80
TOTAL ANNUAL COST OF MATERIALS					324,720.04

6. WATER CONSUMPTION

Daily useage			
employees	37	0.005	0.19
curing blocks			16.93
mixing concrete			5.81
Total daily useage			22.93
Total monthly useage			450.51

Cost	rate	qty	cost
First 18 cubic metres	0.155	18	2.79
Next 054 cubic metres	0.180	54	10.00
Balance	0.222	385	85.36
Monthly cost			98.23
TOTAL ANNUAL COST OF WATER			1,178.77

7. ELECTRICITY CONSUMPTION

Monthly costs			
Block-making machines	4	10.00	40.00
Pan mixers	4	100.00	400.00
Total monthly cost			440.00
TOTAL ANNUAL COST OF ELECTRICITY			5,280.00

8. SUMMARY COSTS

Site establishment & maintance	1,625	0.3%
Plant requirement	5,402	1.1%
Labour requirement	81,662	17.4%
Materials	324,720	69.1%
Water	1,179	0.3%
Electricity	5,280	1.1%
Sub-total	419,876	
Finance charges (9.75% pa)	40,938	8.7%
Contingencies (2%)	9,216	2.0%
Total annual costs	470,030	100.0%
Recall total blocks produced	1,260,000	
UNIT COST OF ONE BLOCK EX WORKS	0.373040	
UNIT COST OF ONE BLOCK EX WORKS (assuming 5% wastage)	0.392673	

21

8

M E M O R A N D U M

TO : THE DIRECTOR
H. MAGDON - ISMAIL

FROM : PROJECT PLANNING ADVISOR
R.J. BEARDMORE

REF: HC/HAR/4/16
HC/KWE

DATE : 16 MARCH 1984

BLOCK PRODUCTION AT KWE KWE

I have reviewed the costing exercise carried out on Kwe Kwe's block making set up and make the following comments.

If KweKwe's production target is 5 000 blocks per day as stated, they will require four machines. The analysis makes reference to three only.

The calculation of the unit labour cost of $0.062 per block checks with our computer model.

As with the Gweru analysis, the reduction factor in quantities of materials seems too great. The volume of unmixed materials, viz, 0.0221m³ cement, 0.05m³ pit sand and 0.10m³ of slag should, when mixed together, produce enough concrete for 15 blocks, not 10 as shown. This suggests material costs per block of $0.1447, rather than $0.1960 as shown in the analysis. This cost could be further reduced if the sand - cement mix, currently 1 : 7, were made leaner. C + CI state that 1 : 85 is acceptable for blocks used externally.

Our computer model predicts an ex works price of $0.2356. See attached print out. This low price is attributable to the extraordinarily low cost of sand and slag.

The unit price of $0.3200 given in the analysis assumes that the block will be transported to the site, i.e. it is not an exworks price. This would be fair enough if Kwe Kwe has the capacity to transport blocks to the site as demanded by beneficiaries. If not, beneficiaries should pay an ex works price and arrange for their own transport. Otherwise bottlenecks will develop as everyone will expect delivery to site by Municipal transport. An ex works price could conceivably be as low as $0.24 as suggested above.

/OTJ

22

A MODEL OF CONCRETE BLOCK MAKING PROCESS: 'FOUR MACHINE' SET-UP IN KWEKWE

Objective: To determine unit production cost of 115mm block in Year 1 given parameters of semi-automative process as follows

1. SCOPE OF OPERATIONS

How many blocks required (including wastage)?	1,240,000
How many blocks per year	1,240,000
How many working days per year?	210
How many blocks per actual working day?	5,800

2. SITE ESTABLISHMENT & MAINTENANCE

A. Capital costs	Tot cost	Life(yr)	AC
a. Access roads	0	10	0
b. Security fencing	0	10	0
c. Security lighting	0	0	0
d. Water connection & reticulation	0	20	0
e. Sewer connection & reticulation	0	20	0
f. Working area (slab)	5,000	40	125
g. Covered area for plant	0	20	0
h. General store & office	0	20	0
i. Toilets & changing rooms	0	20	0
j. Power supply & distribution	0	20	0
Total	5,000		125
Annual maintenance cost (%) in Year 1	0%		1,500
TOTAL SITE ESTABLISHMENT & MAINTENANCE			1,625

3. PLANT REQUIREMENT & MAINTENANCE

A. Capital costs	Qty	unit cost	Tot cost	Life(yr)	AC
a. Block making machines	4	4,000	16,000	10	1,600
b. Molds 115mm	4	520	2,080	3	693
c. Pan mixers (size:7/5)	4	4,400	17,600	10	1,760
d. Trollies, platform	4	260	1,040	10	104
e. Loose tools	1	500	500	1	500
f. Dumpers	0	8,000	0	5	0
g. Other					
Total			37,220		4,657
Annual maintenance cost (%) in Year 1	2%				744
TOTAL PLANT REQUIREMENT & MAINTENANCE					5,402

4. ANNUAL LABOUR REQUIREMENT

A. Wages & salaries	Qty	Rate/hour	Rate/m	AC
a. Brigade foremen (20% of his time)	1	5.75		2,705
b. General workers	35		115.00	48,300
c. Fitters	0	5.48		0
d. Clerks (10% of his time)	1		165.00	198
e. Others	0	0.00		0
Total	37			51,203
B. On-costs				
Pension & other emoluments	39%			19,969
Insurances				500
Petrol, oil, & lubricant				0
Protective clothing				1,110
Central administration				1,200
Sundry other expenses				600
Total				22,779
TOTAL LABOUR REQUIREMENT				73,982

5. MATERIAL REQUIREMENTS

Net volume of block calculated as follows

Gross volume	1	115	450	225	0.01164
Less volume of two voids	2	43	185	225	0.00358
Net volume of a 115mm block					0.00806

Recall number of blocks per year	1,240,000
Therefore volume of concrete per year in cubic metres	10,161
Assume mix of 1:7 and 30 sacks cement per cubic metre	

Material	Ratio	m3	sacks	rate	AC
Cement	19.22	1,952.00	58,564	2.80	164,041.50
Pit sand	45.00	4,572.29		1.00	4,572.29
Slag from Zisco	90.00	9,144.58		0.50	4,572.29
TOTAL ANNUAL COST OF MATERIALS					173,186.08

6. WATER CONSUMPTION

Daily useage			
employees	37	0.005	0.19
curing blocks			16.93
mixing concrete			5.81
Total daily useage			22.93
Total monthly useage			458.51

Cost	rate	qty	cost
First 18 cubic metres	0.155	18	2.79
Next 56 cubic metres	0.180	56	10.08
Balance	0.222	385	85.36
Monthly cost			98.23
TOTAL ANNUAL COST OF WATER			1,178.77

7. ELECTRICITY CONSUMPTION

Monthly costs			
Block-making machines	4	10.00	40.00
Pan mixers	4	100.00	400.00
Total monthly cost			440.00
TOTAL ANNUAL COST OF ELECTRICITY			5,280.00

8. SUMMARY COSTS

Site establishment & maintace	1,625	0.6%	0.0014
Plant requirement	5,402	1.9%	0.0045
Labour requirement	73,982	26.2%	0.0618
Materials	173,186	61.4%	0.1447
Water	1,179	0.4%	0.0010
Electricity	5,280	1.9%	0.0044
Sub-total	240,653		
Finance charges (6.09% effect	15,874	5.6%	0.0133
Contingencies (2%)	5,531	2.0%	0.0046
Total annual costs	282,058	100.0%	0.2356
Recall total blocks produced	1,240,000		

UNIT COST OF ONE BLOCK EX WORKS	0.223855
UNIT COST OF ONE BLOCK EX WORKS (assuming 5% wastage)	0.235637

M E M O R A N D U M

TO : The Director/TSD

FROM : Project Planning Advisor
R.M. Beardmore

REF : HC/HAR/4/16
HC/GWM

DATE : 19th March, 1984

RE : BLOCK PRODUCTION AT GWERU

I have reviewed the costing exercise carried out on Gweru's block making set up and make the following comments.

It would appear that labour costs are systematically under estimated whereas material costs are over estimated.

Labour costs per unit are underestimated because :

i) It has been assumed that one set - up will produce 2 000 blocks per day (versus 1 500 more realistically).

ii) No allowance has been made for labour on-costs such as pension, bonus, etc. normally due to permanent municipal employees.

I calculate the labour element in one block to be $0.0715 compared with $ 0.025 used in the analysis. See attached model print out.

Material costs are over-estimated owing to an erroneous assumption about the ratio of the volume of unmixed materials to that of the mixed concrete. It has been assumed that the unmixed volumes of raw materials for 15 blocks (given as 0.0714 m^3 of pit sand, 0.1428 m^3 of river sand and 0.0221 m^3 of cement totalling 0.2363 m^3) will reduce in bulk when mixed to produce 0.1209 m^3 of concrete, a reduction factor of 48%. According to C + CI, the reduction factor for this 1 : 10 mix should be 32%. That is 0.2363 m^3 of unmixed materials should produce 0.1606 m^3 of concrete, sufficient for 19.9 blocks and not 15 blocks. I therefore calculate material costs per unit to be $ 0.2064 and not $ 0.2646 as has been used in the analysis.

Interestingly enough these two adjustments to the figures for labour and material cancel each other out. Therefore my calculations and those of the analysis conclude that blocks ex work should cost $ 0.31 - 0.33 each.

Gweru Council should aim to produce 3 000 units per day with its two - machine set up. If they require as many as 4 000 blocks per day they will need another machine.

It should be noted that whereas transport was mentioned at the beginning of the exercise, this item was dropped later on and therefore all costs are ex works.

/ppm

A MODEL OF CONCRETE BLOCK MAKING PROCESS: 'TWO MACHINE' SET-UP IN GWERU

Objective: To determine unit production cost of 115mm block in Year 1 given parameters of semi-automative process as follows

1. SCOPE OF OPERATIONS

How many blocks required (including wastage)?	630,000
How many blocks per year	630,000
How many working days per year?	210
How many blocks per actual working day?	3,000

2. SITE ESTABLISHMENT & MAINTENANCE

A. Capital costs	Tot cost	Life(yr)	AC
a. Access roads	0	10	0
b. Security fencing	0	10	0
c. Security lighting	0	8	0
d. Water connection & reticulation	0	20	0
e. Sewer connection & reticulation	0	20	0
f. Working area (slab)	5,000	40	125
g. Covered area for plant	0	20	0
h. General store & office	0	20	0
i. Toilets & changing rooms	0	20	0
j. Power supply & distribution	0	20	0
Total	5,000		125
Annual maintenance cost (%) in Year 1	0%		1,500
TOTAL SITE ESTABLISHMENT & MAINTENANCE			1,625

3. PLANT REQUIREMENT & MAINTENANCE

A. Capital costs	Qty	Unit cost	Tot cost	Life(yr)	AC
a. Block making machines	2	4,000	8,000	10	800
b. Molds 115mm	2	520	1,040	3	347
c. Pan mixers (size:7/5)	2	4,400	8,800	10	880
d. Trollies, platform	2	260	520	10	52
e. Loose tools	1	500	500	1	500
f. Dumpers	0	8,000	0	5	0
g. Other					
Total			18,860		2,579
Annual maintenance cost (%) in Year 1	2%				377
TOTAL PLANT REQUIREMENT & MAINTENANCE					2,956

4. ANNUAL LABOUR REQUIREMENT

A. Wages & salaries	Qty	Rate/hour	Rate/m	AC
a. Brigade foremen (20% of his time)	1	5.75		2,705
b. General workers	19		115.00	24,220
c. Fitters	0	5.60		0
d. Clerks (10% of his time)	1		165.00	198
e. Others	0	0.00		0
Total	21			29,123
B. On-costs				
Pension & other emoluments	39%			11,358
Insurances				500
Petrol, oil, & lubricant				0
Protective clothing				630
Central administration				1,200
Sundry other expenses				600
Total				13,688
TOTAL LABOUR REQUIREMENT				42,811

5. MATERIAL REQUIREMENTS

Net volume of block calculated as follows					
Gross volume	1	115	450	225	0.01164
Less volume of two voids	2	43	185	225	0.00358
Net volume of a 115mm block					0.00806
Recall number of blocks per year	630,000				
Therefore volume of concrete per year in cubic metres	5,080				
Assume mix of 1:10 and 30 sacks cement per cubic metre					

Material	Ratio	m3	sacks	rate	AC
Cement	13.20	670.60	20,118	2.83	56,934.13
Pit sand	45.06	2,286.14		9.24	21,123.97
River sand	90.00	4,572.29		9.94	45,448.54
TOTAL ANNUAL COST OF MATERIALS					123,506.64

4. WATER CONSUMPTION

Daily useage			
employees	21	0.005	0.11
curing blocks			8.47
mixing concrete			2.90
Total daily useage			11.48
Total monthly useage			229.50

Cost	rate	qty	cost
First 18 cubic metres	0.155	18	2.79
Next 56 cubic metres	0.180	56	10.08
Balance	0.222	156	34.52
Monthly cost			47.39
TOTAL ANNUAL COST OF WATER			568.70

7. ELECTRICITY CONSUMPTION

Monthly costs			
Block-making machines	2	10.00	20.00
Pan mixers	2	100.00	200.00
Total monthly cost			220.00
TOTAL ANNUAL COST OF ELECTRICITY			2,640.00

8. SUMMARY COSTS

Site establishment & maintnce	1,625	0.9%	0.0027
Plant requirement	2,956	1.6%	0.0049
Labour requirement	42,811	22.7%	0.0715
Materials	123,507	65.6%	0.2064
Water	569	0.3%	0.0010
Electricity	2,640	1.4%	0.0044
Sub-total	174,107		
Finance charges (6.09% effect	10,603	5.6%	0.0177
Contingencies (2%)	3,694	2.0%	0.0062
Total annual costs	188,404	100.0%	0.3148
Recall total blocks produced	630,000		
UNIT COST OF ONE BLOCK EX WORKS	0.299054		
UNIT COST OF ONE BLOCK EX WORKS (assuming 5% wastage)	0.314794		

NOTES ON A MEETING WITH CITY OF HARARE ON COSTING OF CONCRETE BLOCK PRODUCTION ON THURSDAY, MARCH, 1, 1984 AT MCNH CONFERENCE ROOM, EARL GREY AT 9.30 A.M.

PRESENT:

MS. A. HOVIK	MCNH
MR. R. BEARDMORE	MCNH
MR. JEWELL	MCNH
MR. I. FIELDEN	COH
MR. I. GOW	COH
MR. COPPLETON	COH
MR. CONNOLLY	COH
MR. S. BAIS	COH

1. Purpose of Meeting

It was agreed that the purpose of the meeting was to review the costing exercise on the production of concrete blocks prepared by COH officials with a view to agreeing on a reasonable unit price.

2. Assumptions

COH outlined the following major assumptions on which their calculations were based:

(a) Establishment of a new block making slab would involve minimal costs since they would use the slabs for a school building and storage of materials etc could be provided in a house.

(b) They would use 4 semi-automative machines and 2 10/7 mixers each with a dumper to transport concrete to a central location for distribution to mixers by wheel barrow. Each set-up would produce 1200 blocks per day for 250 days in a year (There would be no loss to rainy days because the slabs would be covered).

(c) Materials delivered to site were priced as follows:-

	Warren D	Crusher Station
Cement	$2,92 / sack	$2,87 / sack
Sand	$15,92 /m³	$13,47 /m³
Aggregate	$12,76 /m³	$10,82 /m³

Allow 2% for wastage. The mix was 1: 2.5 : 5.5

(d) Finance charges calculated on acquisition of plant only.

(e) The volume of a block is 0.01067m³ because the voids do not go right through the block.

2/.....

26

(f) Each set-up required 14 - 18 brigade workers deployed as follows:

Mixer loaders	3
Mixer operator	1
Wheelers	4
Machine operator	1
Machine assistant	1
Stackers/Curers	4 - 8

In addition two dumper operators are required as well as a full time foreman and site clerk.

Workers are employed on a 45 hour week over 5 days at a basic monthly wage of $121,09. Labour on-costs amount to 54% including an anticipated wage rise of 15%.

3. Unit Prices

COH Officials said the unit cost of a block ex works varies from $0,42 to $0,46 depending on the amount of labour used. Whereas material costs and overheads were relatively static, labour inputs on the other hand were "variable and difficult" and has a great effect on the final unit price.

4. Labour Requirements

MCNH Officials said the COH's assumptions about labour requirements were virtually double what the "Metfab" manufacturers' recommended. Moreover the use of dumpers meant double handling of the mix before it got to the machines. Finally MCH queries the number of men needed to stack blocks after they had been cured on the slab for 2 days. COH officials replied that labour productivity was very difficult to control and that Council regulations prevented effective disciplinary action or the use of material incentives.

5. Follow-up Action

MCNH Officials requested a copy of the City's calculations for closer scrutiny. COH officials said they would send them once they had been finalised. There was therefore no agreement on the unit price of a block. Further discussions on the basis of a written costing document are required.

R. BEARDMORE/LL.
8th March, 1984

Annex C

MEMORANDUM

TO: DIRECTOR, TSD

FROM : PROJECT PLANNING ADVISOR
R. BEARDMORE

REF: HC/HAR/4/3

DATE: 11th January, 1984

FINANCIAL CONTROL OF PROFESSIONAL FEES

During the course of setting up financial control charts for Parkridge Fontainbleau I have had occasion to examine the records dealing with payments to consultants appointed by TSD. A number of questions were raised as follows:-

As you know the system requires a "TSD Z" form to be completed for every fee certificate in respect of each appointment. For example John Burrow has been commissioned to work on P/F. They have been given a number of appointments in connection with P/F, i.e. project management, engineering design and site supervision. Each appointment requires an annual allocation for funds against which fees are paid. Each appointment is given an "E.P.A. NO." e.g. 18A, 18B and 18C in the case of John Currow. It appears that for several months now fee notes for each of these appointments have been mixed together and allocated under different EPA Nos. As a result we are having difficulty in Monitoring expenditure against each appointment.

The second issue, one not foreseen when the system was established, concerns the split of fees between Phases of P/F. For example, JBP's project management fee covers Phase I and II but our records doe not reflect this. The difficulty here is one of allocating this cost between phases for cost recovery purposes, i.e. how much is added to plot costs in each phase to be passed on to beneficiaries? There is a similar difficulty with Ascon Soil Laboratory's fees.

A third issue concerns that fact that there are a number of services which we have paid for which are not professional services as such but are nevertheless part of the cost of the works. For example, grass cutting for $20,000. Perhaps security services ($51,857 to date) is another.

I recommend the following action be taken to rectify this situation:

(1) A special exercise be undertaken to clarify all "EPA" expenditure incurred to date in P/F once and for all into the proper categories. Perhaps Cdes Bhargava and Mkuku could do this.

(2) When (1) is complete we assess each account to determine revised "estimated to total cost" figures to be inserted into the budget and used for financial control purposes. We should then assign a percentage of each "multi-Phase" fee estimate to each Phase, i.e. say for example JBP's project management fee is split between Phase I and II on basis of number of plots or cost of infrastructure or other system.

(3) Cde. Bhargava becomes familiar with all categories for P/F and marks all future fee notes accordingly before they are processed for payment, thus allowing relevant officers to use the proper clarifications when preparing "TSD Z" and payment vouchers.

Until such time as this exercise is done we will be constrained to monitor expenditure of fees by consultant and not by appointment, with a resultant decrease in financial control. We can discuss.

28

Annex D

RETURN NO 2

PARKRIDGE/FONTAINBLEAU: ALLOCATION RETURN: MONTH ENDING 29 FEBRUARY 1984

Stand No	Plot * Size A	Plot * Size B	Current Household Income $	Age of Allottee	No of Dependants (dissemonly)	Loan Entitlement
2896	-	1	$175,00	38	2	3230,00
2164	1		$80,00	42	2	294,00
2151	1		$140,00	49	4	2148,00
2154	1		$154,00	44	4	2457,00
2161	1		$133,12	49	5	1839,00
2163	1		$155,61	44	2	2457,00
2152	1		$154,92	43	7	2457,00
2155	1		$136,09	50	2	2148,00
2157	1		$143,00	43	4	2148,00
2156	1		$154,92	65	6	2457,00
2158	1		$ 99,00	47	6	912,00
2153	1		$142,00	48	2	2148,00
2162	1		$147,42	36	5	2457,00
2170	1		$ 90,00	54	6	603,00
2165	1		$136,09	46	1	2148,00
2168	1		$150,00	56	5	2457,00
2167	1		$147,00	52	2	2457,00
2169	1		$115,00	52	3	1221,00
2166	1		$132,00	46	7	1839,00
2308	1		$150,00	54	4	2457,00
Totals C/Fwd	19	1	$2735,17	958	79	40334,00

	Stand No	Plot Size A	Plot Size B	Household Income $	Age of Allottee	No Of Dependants	Loan Entitlement $
B/Fwd		19	1	2735,17	958	79	40334,00
	2301	1		$131,00	32	7	$1839,00
	2305	1		$152,00	46	3	$2457,00
	2304	1		$ 76,10	45	4	294,00
	2306	1		$171,09	44	7	$3075,00
	2298	1		$150,28	62	-	$2457,00
	2311	1		$153,01	47	8	$2457,00
	2310	1		$135,37	39	3	$1839,00
	2307	1		$150,41	37	7	$2457,00
	2294	1		$140,01	48	6	$2148,00
	2309	1		$115,00	67	4	$1221,00
	2297	1		$ 80,00	46	5	$ 294,00
	2300	1		$115,00	52	5	$1221,00
	2312	1		$160,00	39	7	$2766,00
	2299	1		$157,00	39	3	$2766,00
	2303	1		$165,69	45	4	$2766,00
	2295	1		$165,09	40	5	$2766,00
	2302	1		$115,00	48	5	$1221,00
	2321	1		$169,00	40	5	$3075,00
	2317	1		$144,79	49	4	$2148,00
	2318	1		$120,00	41	4	$1530,00
	2320	1		$136,09	41	5	$2148,00
	2354	1		$173,33	52	3	$3075,00
	2319	1		$138,66	41	3	$2148,00
	2296	1		$135,85	44	5	$1839,00
	2351	1		$155,57	37	7	$2457,00
	2349	1		$105,00	41	2	$ 912,00
	2350	1		$157,00	45	4	$2766,00
	2328	1		$141,00	46	2	$2148,00
	2353	1		$149,00	47	5	$2457,00
	2323	1		$130,00	50	7	$1839,00
	2324	1		$153,00	37	3	$2457,00
	2352	1		$127,00	32	4	$1839,00
	2348	1		$117,00	35	4	$1530,00
TOTAL C/Fwd		52	1	$7319,51	2412	229	$108746,00

	Stand No	Plot Size A	Plot Size B	Household Income $	Age of Allottee	No of Dependants	Loan Entitlement $
B/Fwd		52	1	7319,51	2412	229	108746,00
	2327	1		$145,99	39	3	$2148,00
	2326	1		$147,00	[illegible]	5	$2457,00
	2322	1		$ 98,00	59	1	$ 912,00
	2332	1		$150,00	36	[illegible]	$2457,00
	2333	1		$143,00	46	5	$2148,00
	2325	1		$100,00	62	1	$ 912,00
	2346	1		$154,92	57	6	$2457,00
	2341	1		$148,20	44	1	$2457,00
	2338	1		$157,00	55	5	$2766,00
	2340	1		$148,62	39	3	$2457,00
	2331	1		$155,48	43	4	$2457,00
	2347	1		$125,06	52	3	$1530,00
	2336	1		$156,00	42	6	$2766,00
	2335	1		$142,00	42	5	$2148,00
	2339	1		$125,06	52	5	$1530,00
	2334	1		$136,33	54	5	$2148,00
	2337	1		$155,61	62	2	$2457,00
	2344	1		$147,25	60	4	$2457,00
	2343	1		$142,00	37	5	$2148,00
	2345	1		$135,80	41	2	$1839,00
	2342	1		$175,80	44	4	$3230,00
	2876	1		$114,40	41	5	$1221,00
	2877	1		$127,01	47	4	$1839,00
	2884	1		$153,10	46	5	$2457,00
	2686	1		$125,08	48	3	$1530,00
	2883	1		$162,80	36	4	$2766,00
	2923	1		$130,00	31	3	$1839,00
	2921	1		$173,00	36	5	$3075,00
	2922	1		$160,63	35	-	$2766,00
	2881	1		$135,37	47	6	$1839,00
	2882	1		$136,09	37	1	$2148,00
	2885	1		$153,84	42	4	$2457,00
	2880	1		$131,56	44	4	$1839,00
Total C/Fwd	-	65	1	12011,60	3942	352	180403,00

	Stand No	Plot Size A	Plot Size B	Household Income $	Age of Allottee	No of Dependants	Loan Entitlement $
B/Fwd		85	1	12011,60	3942	352	180403,00
	2879	1		$159,55	34	2	$2766,00
	2928	1		$136,09	42	5	$2148,00
	2927	1		$158,55	52	5	$2766,00
	2929	1		$142,48	44	6	$2148,00
	2926	1		$141,66	54	8	$2148,00
	2924	1		$128,96	57	5	$1839,00
	2862	1		$136,09	36	3	$2148,00
	2865	1		$119,50	40	4	$1530,00
	2864	1		$136,09	64	5	$2148,00
	2861	1		$167,70	52	1	$3075,00
	2863	1		$151,00	28	3	$2457,00
	2870	1		$122,00	48	6	$1530,00
	2860	1		$133,75	44	5	$1839,00
	2859	1		$161,67	42	4	$2766,00
	2868	1		$125,06	37	7	$1530,00
	2867	1		$148,85	40	3	$2457,00
	2866	1		$113,00	52	5	$1221,00
	2872	1		$134,33	45	2	$1839,00
	2875	1		$158,22	52	2	$2766,00
	2874	1		$168,68	42	1	$3075,00
	2878	1		$136,09	49	6	$2148,00
	2858	1		$151,36	46	2	$2457,00
	2871	1		$106,00	52	5	$1221,00
	2925	1		$160,00	45	7	$2766,00
	2918	1		$160,25	36	3	$2766,00
	2887	1		$153,11	46	8	$2457,00
	2890	1		$136,09	34	5	$2148,00
	2853	1		$175,00	39	2	$3230,00
	2916	1		$136,40	45	5	$2148,00
	2920	1		$141,66	52	4	$2148,00
	2856	1		$122,80	48	2	$1530,00
	2855	1		$146,46	40	5	$2457,00
	2854	1		$157,00	42	5	$2766,00
TOTAL C/Fwd		118	1	$15926,61	5421	493	254841,00

3V

	Stand No	Plot Size A	Plot Size B	Household Income $	Age of Allottee	No of Dependants	Loan Entitlement $
B/Fwd		118	1	$15926,61	5421	493	$254841,00
	2889	1		$169,67	44	7	$3075,00
	2857	1		$175,71	49	2	$3230,00
	2917	1		$140,00	42	3	$2148,00
	2894	1		$144,33	43	5	$2148,00
	2915	1		$132,00	35	-	$1839,00
	2914	1		$162,00	47	4	$2766,00
	2895	1		$136,09	42	6	$2148,00
	2911	1		$154,92	38	4	$2457,00
	2910	1		$150,94	33	5	$2457,00
	2891	1		$131,40	58	2	$1839,00
	2159	1		$142,00	38	4	$2148,00
	2160	1		$155,57	43	2	$2457,00
	2899	1		$157,00	42	5	$2766,00
	2907	1		$157,74	44	6	$2766,00
	2906	1		$151,10	44	2	$2457,00
	2905	1		$147,33	37	7	$2457,00
	2904	1		$160,43	44	3	$2766,00
	2902	1		$142,00	48	4	$2148,00
	2901	1		$136,09	35	3	$2148,00
	2898	1		$136,09	41	6	$2148,00
	2897	1		$142,00	43	4	$2148,00
	2888	1		$144,69	35	3	$2148,00
	2903	1		$ 85,00	36	4	$ 294,00
	2892	1		$175,93	51	4	$3230,00
	2900	1		$149,37	35	4	$2457,00
	2913	1		$143,00	41	3	$2148,00
	2912	1		$128,14	37	4	$1839,00
	2893	1		$157,00	48	3	$2766,00
	2851	1		$105,40	55	4	$ 912,00
	2842	1		$155,58	35	4	$2457,00
	2850	1		$167,96	49	6	$3075,00
	2845	1		$148,62	45	6	$2457,00
	2844	1		$ 80,00	54	[illegible]	$ 294,00
TOTAL C/Fwd		151	1	$20691,71	6832	626	$329434,00

	Stand No	Plot Size A	Plot Size B	Household Income $	Age of Allottee	No of Dependants	Loan Entitlement $
B/Fwd		151	1	$20691,71	6832	626	$329434,00
	2852	1		$151,00	43	5	$2457,00
	2848	1		$169,99	38	4	$3075,00
	2847	1		$155,57	41	3	$2457,00
	2849	1		$148,62	41	2	$2457,00
	2787	1		$136,09	36	3	$2148,00
	2788	1		$148,46	45	6	$2457,00
	2789	1		$147,33	35	5	$2457,00
	2790	1		$127,33	48	4	$1839,00
	2792	1		$148,65	40	5	$2457,00
	2791	1		$148,02	49	6	$2457,00
	2793	1		$136,09	42	2	$2148,00
	2794	1		$128,96	61	7	$1839,00
	2798	1		$136,09	32	4	$2148,00
	2799	1		$155,57	35	4	$2766,00
	2800	1		$127,80	48	7	$1839,00
	2801	1		$154,92	45	3	$2457,00
	2802	1		$147,42	49	3	$2457,00
	2803	1		$155,61	44	2	$2457,00
	2795	1		$125,05	36	-	$1839,00
	2784	1		$149,00	45	6	$2457,00
	2786	1		$134,81	46	2	$1839.00
	2785	1		$132,00	46	4	$1839,00
	2779	1		$162,69	37	3	$2766,00
	2780	1		$129,70	49	3	$1839,00
	2781	1		$142,30	44	4	$2148,00
	2783	1		$158,77	41	5	$2766,00
	2782	1		$147,42	49	3	$2457,00
	2778	1		$162,68	45	5	$2766,00
	2777	1		$154,92	40	3	$2457,00
	2776	1		$142,00	44	5	$2148,00
	2775	1		$173,00	45	7	$3075,00
	2773	1		$128,59	36	4	$1839,00
	2774	1		$ 80,00	37	3	$ 294,00
Total C/Fwd		184	1	$25,438,16	8244	758	$404335,00

	Stand No	Plot Size A	Plot Size B	Household Income C	Age of Allotee	No of Dependants	Loan Entitlement
B/Fwd		184	1	$25438,16	8244	750	$404,335,00
	2769	1		$151,71	46	2	$2457,00
	2770	1		$154,92	48	8	$2457,00
	2765	1		$125,05	42	4	$1530,00
	2809	1		$163,10	52	5	$2766,00
	2768	1		$149,00	49	5	$2457,00
	2805	1		$138,92	59	5	$2148,00
	2804	1		$147,22	47	4	$2457,00
	2743	1		$155,61	46	4	$2766,00
	2772	1		$142,00	44	1	$2148,00
	2808	1		$136,09	39	5	$2148,00
	2766	1		$118,00	51	5	$1530,00
	2767	1		$136,09	39	1	$2148,00
	2771	1		$147,42	30	3	$2457,00
	2740	1		$144,48	48	7	$2148,00
	2741	1		$136,09	36	4	$2148,00
	2821	1		$136,09	35	5	$2148,00
	2818	1		$146,50	35	2	$2457,00
	2817	1		$159,90	37	6	$2766,00
	2814	1		$170,00	32	3	$3075,00
	2816	1		$175,41	60	5	$3230,00
	2815	1		$162,00	47	5	$2766,00
	2813	1		$154,92	32	2	$2457,00
	2660	1		$162,68	38	2	$2766,00
	2811	1		$127,02	48	4	$1839,00
	2812	1		$168,14	32	6	$3075,00
	2659	1		$136,09	29	3	$2148,00
	2661	1		$121,09	30	2	$1530,00
	2657	1		$165,00	42	2	$2766,00
	2810	1		$136,09	38	4	$2148,00
	2655	1		$154,92	37	3	$2457,00
	2652	1		$142,00	54	3	$2148,00
	2653	1		$136,09	38	3	$2148,00
	2654	1		$144,00	64	3	$2148,00
TOTAL B/Fwd		217	1	$30281,60	9648	804	$482172,00

	Stand No	Plot Size A	Plot Size B	Household Income $	No of Allottee	No of Dependants	Loan Entitlement $
B/Fwd		217	1	$30281,80	9648	884	$482172,00
	2658	1		$138,67	37	3	$2148,00
	2656	1		$157,43	37	5	$2766,00
	2651	1		$136,09	42	4	$2148,00
	2643	1		$139,00	34	2	$2148,00
	2824	1		$136,09	53	3	$2148,00
	2642	1		$142,00	55	3	$2148,00
	2641	1		$132,00	43	4	$1839,00
	2649	1		$155,68	36	3	$2457,00
	2650	1		$136,00	37	1	$2148,00
	2648	1		$159,99	37	4	$2766,00
	2742	1		$136,00	56	-	$2148,00
	2833	1		$157,00	41	5	$2766,00
	2828	1		$142,00	42	4	$2148,00
	2832	1		$131,40	63	2	$1839,00
	2831	1		$158,38	55	4	$2766,00
	2837	1		$142,00	41	2	$2148,00
	2836	1		$148,00	54	4	$2457,00
	2839	1		$174,00	63	5	$3075,00
	2840	1		$134,55	32	3	$1839,00
	2841	1		$136,00	32	4	$2148,00
	2835	1		$136,09	55	5	$2148,00
	2834	1		$142,00	52	2	$2148,00
	2830	1		$ 90,00	43	4	$ 603,00
	2829	1		$148,85	62	3	$2457,00
	2838	1		$162,68	30	3	$2766,00
	2825	1		$145,10	43	4	$2148,00
	2823	1		$157,00	44	4	$2766,00
	2819	1		$136,09	36	5	$2148,00
	2820	1		$115,00	44	3	$1221,00
	2807	1		$146,77	N/K	7	$2457,00
	2827	1		$154,86	48	2	$2457,00
	2822	1		$136,09	44	3	$2148,00
	2806	1		$136,09	65	1	$2148,00
TOTAL C/Fwd		250	1	$34 980,70	11104	995	$555837,00

	Stand No	Plot Size A	Plot Size B	Household Income $	Age of Allottee	No of Dependants (children)	Loan Entitlement $
B/fwd		250	1	$34 980,70	11104	995	$555 837,00
	2919	1		$142,00	38	3	$2 148,00
TOTALS		251	1	$35 122,70	11142	998	$557 985,00
Add Totals from previous month							
Grand Total		251	1	$35 122,70	11142	998	$557,985,00
Average	-	-	-	$139,00	44	4	$2,223,00
Highest	-			$175,98	67	8	$3,230,00
Lowest				$76,10	28	NIL	$294,00

* **NOTE:** Plot 'A' = -299m²
Plot 'B' = 300m²+

DATE. ....

Annex E

MEMO

To: Director

From: Project Planning Advisor

Ref: F/3/49

Date: 27 March 1984

Progress on USAID-funded Schemes

Please find attached a copy of the above report as requested in your memo of 23 March 1984 for your further action.

PROGRESS REPORT

ON

HOUSING SCHEMES FUNDED BY USAID HOUSING GUARANTY LOANS

Ministry of Construction & National Housing

P. Bag 7755 Causeway Harare

27 March 1984

Summary

The Ministry of Construction and National Housing has embarked upon four projects funded by USAID's Housing Guaranty Program, totalling Z$ 72,7 million.

All schemes are based on the "sites and services" model with beneficiaries selected from the poorer half of the urban populations in which they live. All stands are fully serviced with roads, stormwater drainage, water supply, and water-borne sewerage reticulation. Households have a choice of how to build their houses according to the three modes of construction approved by the Ministry: brigades, self-help, or co-operatives. Allottees are eligible for financial and technical assistance in the form of loans in cash and/or kind and technical services from the site team administered by the Local Authority. All schemes make provision for community and commercial facilities such as schools, clinics, admin offices, etc.

The largest of the four projects is being implemented at Parkridge / Fontainbleau in Harare in two discrete but overlapping phases. A detailed description of Phase I is given in the revised Project Delivery Plan dated 26 January 1984. This phase, valued at Z$ 29,5 million, is well under way with 4104 stands serviced under the direction of the Ministry. The City of Harare began allocation of stands on 6 February 1984 since when they have disposed of 600 to eligible households earning a mean income of Z$ 143 per month. The balance of the stands will be allocated between now and August 1984. The City of Harare is currently mounting a programme to construct community facilities by means of their municipal building brigade. The scheme is planned to be complete by June 1985

The second phase of Parkridge / Fontainbleau, valued at Z$ 25,5 million, is also in progress. Contracts for infrastructure were awarded in early 1983 and 3264 stands are expected to be ready for allocation by the time those in Phase I have been disposed of. The programme for the construction of community facilities will dove-tail with that for Phase I as well. Phase II is planned for completion in June 1986. Details of this project can be found in the Draft Project Delivery Plan dated 22 March 1984, extracts of which are attached.

The remaining three USAID HG-funded projects are located in the secondary towns of Marondera, Kadoma, and Chinhoyi. These schemes, still in the planning stage, are valued at Z$ 17,7 million and involve a total of 2500 serviced stands and loans. Sites have been allocated in all three towns and physical plans have been prepared by the Provincial Planning Office, Mashonaland. Engineering designs for infrastructure services have been completed by the Local Authorities. Applications for borrowing powers from Marondera and Kadoma were received by the Ministry in July 1983 and November 1983 respectively. Further details of these three schemes are contained in the Draft PDP referred to above, relevant extracts of which are attached.

46

PARKRIDGE / FONTAINBLEAU PHASE I

Up-dated extract from the Revised Project Delivery Plan of 26 January 1984 describing project outputs and physical and financial progress as of March 1984.

4. PHYSICAL OUTPUTS

The physical outputs of the project comprise:

- 4,104 fully serviced plots (served by roads, water, water-borne sewerage, and electricity); 3178 of less than 300 square meters, 908 of between 300 square meters and 500 square meters, and 18 of more than 500 square meters area.

- 3,694 homeownership housing units of various initial sizes, all to be progressively extended to a minimum of four rooms; 410 rental housing units.

- 4 primary schools.

- 1 secondary school.

- 1 central shopping area, including infrastructure servicing.

- 3 "local" shopping areas, including infrastructure servicing.

- bus termini and laybys.

- 1 project administration centre, including materials store, finance offices, loan offices, administration offices, and training centre.

- 1 major North-South access road.

- improvement to the Bulawayo-Harare Road along the northern boundary of the Phase I site.

- trunk electrical supply.

- trunk water supply.

- trunk sewerage main.

5. REVIEW OF CURRENT PROJECT STATUS, EXPENDITURE, AND PROGRESS

The current status of this project is as follows:

5.1 Physical Outputs

o **Land Servicing Programme:** The land servicing programme, in both its on-site and off-site aspects, is virtually completed. 4,104 plots have been serviced with access roads, individual water connections, and water-borne sewerage connections. On-site electrical reticulation is well underway. Distributor and feeder roads are virtually complete, and trunk water and sewerage mains have been installed.

Installation of infrastructure to service shopping areas has not yet begun. It is anticipated that following tendering in March 1984, a contract will be let to carry out servicing of all shopping areas.

o **Project Administration Centre:** Construction of the project administration centre, comprising a materials store and yard, administration offices, loan offices, finance offices, and a training centre, is well underway. Construction is approximately one month behind schedule, due primarily to problems encountered initially with stabilizing sub-grades for foundations and floors. At the end of March 1984 all works were 98% complete with occupation by the City site team expected on 14 April 1984. Site works remain to be done. Site administration staff were established on-site in mid-November using temporary office space in rental houses. Most administrative aspects of the project can be handled from these temporary offices. However, initial operation of the site materials supply programme will be hampered by lack of adequate site establishment. While a limited range of materials in small quantities may be offered from a temporary store, full operation of the on-site materials supply programme will not begin until completion of the store currently under construction. It is not anticipated that initial lack of a full range and volume of materials on-site will delay house construction, since it is expected that demand for materials will be limited in the first months after initial plot allocations, and since the construction loans offered to beneficiaries will be available to them in both cash and materials.

o **Community Facilities:** City of Harare officials are preparing designs for the first of several primary schools to be built in Phase I. They have been advised that utilization of some form of brigade approach will be required.

5.2. Project Expenditure

Work-in-Progress expenditure on Parkridge-Fontainbleau Phase I as of 29 February, 1984, is set forward in the table on the following page.

PARKRIDGE / FONTAINBLEAU PHASE I FINANCIAL CONTROL CHART DATE: 29 FEB 04

PROJECT COMPONENT	REV EST (87/03)	SPENT TO 30.6.03	ALLOCATION 03/04	SPENT 03/04 TO 31.12.03	MONTHLY EXPENDITURE JANUARY 04	FEBRUARY 04	MARCH 04	APRIL 04	MAY 04	JUNE 04	OVERALL EXP TO DATE
A. LAND											
1. Acquisition (COH)	201,335	201,335	0	0	0	0	0	0	0	0	201,335
2. Survey	127,000	100,000	27,000	5,200	970	370					106,556
Sub-total for A	328,335	301,335	27,000	5,200	970	370	0	0	0	0	307,891
B. PRIMARY INFRASTRUCTURE											
1. Roads & storm drains	0	0	0	0	0	0					0
2. Bulk water supply	241,500	230,000	11,500	0	0	0					230,000
3. Sewers	0	0	0	0	0	0					0
4. Electricity	0	0	0	0	0	0					0
Sub-total for B	241,500	230,000	11,500	0	0	0	0	0	0	0	230,000
C. SITE SERVICING											
1. Roads & drains											
Unit 1N, 1S (05/02)	701,000	562,000	219,000	122,605	0	0					684,605
Unit 2 (18/02)	1,139,000	500,000	639,000	408,359	0	43,155					951,514
Unit 2X, 3, 4 (22/02)	1,111,416	553,000	558,416	407,403	0	0					960,403
Sub-total for R&D	3,031,416	1,615,000	1,416,416	938,447	0	43,155	0	0	0	0	2,596,602
2. Water & sewers											
Unit 1S (06/02)	430,000	332,000	98,000	13,230	0	0					345,230
Unit 1N (07/02)	494,000	330,000	164,000	76,584	0	0					406,584
Unit 2 (19/02)	420,000	289,000	141,000	0	0	0					289,000
Unit 2X, 3, 4 (23/02)	1,121,056	795,000	326,056	234,960	0	0					1,029,960
Sub-total for W&S	2,475,056	1,746,000	729,056	324,774	0	0	0	0	0	0	2,070,774
3. Tower / street lights	454,750	292,000	162,750	0	0	0					292,000
4. Electricity	1,709,400	674,845	194,250	0	0	0					674,845
5. Landscaping & parks	0	0	0	0	0	0					0
6. Street / plot numbers	12,250	0	12,250	0	0	0					0
7. Shopping areas servicing	435,500	0	435,500	0	0	0					0
Sub-total for C	8,318,372	4,327,845	3,150,222	1,263,221	0	43,155	0	0	0	0	5,634,101
D. HOUSE CONSTRUCTION											
1. Capital for house loans	11,451,400	170,475	6,427,000	0	0	0					170,475
2. Construct rental (MOH)	2,311,236	0	1,000,000	0	0	0					0
3. Construct rental (COH)	512,745	174,005	337,940	300,000	0	0					474,005
Sub-total for rental	2,823,981	174,005	1,337,940	300,000	0	0	0	0	0	0	474,005
Sub-total for D	14,275,381	345,480	7,764,940	300,000	0	0	0	0	0	0	645,480
E. COMMUNITY FACILITIES											
1. Primary schools											
PS2 & PS3	700,000	0	700,000	0	0	0					0
PS5 & PS8	700,000	0	0	0	0	0					0
Sub-total for PS	1,400,000	0	700,000	0	0	0	0	0	0	0	0
2. Secondary schools (1)	875,000	0	0	0	0	0					0
3. Health centre	550,000	0	550,000	0	0	0					0
4. Markets / toilets / shops	172,200	0	172,200	0	0	0					0
5. Administrative complex											
Building works (25/03)	540,340	74,089	474,251	80,000	0	81,074					235,163
Equipment	230,429	0	230,429	0	0	0					0
Sub-total for Admin.	770,769	74,089	704,680	80,000	0	81,074	0	0	0	0	235,163
6. Demonstration houses (68)	0	0	0	0	0	0					0
7. Fencing (40/02)	49,402	49,402	0	0	0	0					49,402
8. Other works	0	0	0	0	0	0					0
Sub-total for E	3,825,731	123,571	2,127,160	80,000	0	81,074	0	0	0	0	284,645
F. TECHNICAL ASSISTANCE											
1. Project admin (by COH)											
Salaries	195,000	0	65,000	0	0	0	0	0	0	0	0
On-costs	195,000	0	65,000	0	0	0	0	0	0	0	0
Sub-total for admin	390,000	0	130,000	0	0	0	0	0	0	0	0
2. Professional services											
JBP proj manage (1BA)	46,000			7,200	17,945	1,200					26,345
JBP design (1BB)	235,000			0	0	0					0
JBP supervision (1BC)	95,000			24,432	0	5,592					32,025
Ascon soil tests (1BF)	120,000			31,881	0	13,671					45,552
Site security (25A)	40,000			4,798	0	3,399					8,197
Other services	30,000			0	0	0					0
Sub-total for prof fees	564,000	450,000	114,000	70,312	17,945	23,842	0	0	0	0	542,119
Sub-total for F	954,000	450,000	244,000	70,312	17,945	23,842	0	0	0	0	542,119
TOTAL EXCLUDING CONTINGENCIES	27,945,319	5,770,191	13,326,022	1,710,741	18,915	148,469	0	0	0	0	7,444,316
G. CONTINGENCIES											
1. Physical	406,942										
2. Price (inflation)	1,147,719										
Sub-total for G	1,554,661										
GRAND TOTAL	29,500,000	5,770,191	13,326,022								
Funded/executed by COH	1,104,000	376,140	447,940	300,000	0	0	0	0	0	0	676,140
Funded by GOZ											
Executed by MOHW direct	7,432,794	4,034,571	3,390,223	1,410,741	18,915	148,469	0	0	0	0	5,620,696
Executed by COH direct	19,408,445	1,347,400	9,460,459	0	0	0	0	0	0	0	1,347,400
Contingencies	1,554,661										

PARKRIDGE / FONTAINBLEAU PHASE II AND SECONDARY TOWNS

Extracts from the Draft Project Delivery Plan for the Second USAID HG Loan:

Table 1.1 summarizes the physical components of each scheme

Table 1.6 summarizes the estimated total costs of each component of each scheme

Part 2 describes Parkridge / Fontainbleau Phase II, also known as Parkridge East. A location map and proposed schedule for implementation are given.

Part 3 describes the scheme at Marondera, located at the site of the old Nyameni township. A map and implementation schedule are attached.

Part 4 describes the Kadoma scheme located at the Waverely site close to the centre of town. The implementation schedule is the same as that for Marondera.

Part 5 describes the Chinhoyi scheme situated near the Chinhoyi stream. The implementation schedule is same as that for Marondera.

TABLE 1.1 PHYSICAL COMPONENTS BY TOWN

TOWN / SITE NAME	HARARE Parkridge East	MARONDERA Nyameni	KADOMA Waverley	CHINHOYI Stream Site
Total area of site (hectares)	275	89	81	40
Distribution of plot sizes				
Area (m^2)				
less than 199	324	0	0	0
200 - 299	2940	0	0	411
300 - 399	0	837	896	89
400 - 499	0	127	19	0
over 500	0	71	31	0
Total	3264	1035	946	500
Non-residential stands				
Primary schools	6	1	2	1
Secondary schools	3	0	1	0
Health centres	1	1	1	1
Local shopping centres	2	1	1	1
Light industrial areas	1	1	1	1
Admin office complexes	1	1	1	1

NOTE: Not all non-residential facilities provided for in the physical plans are funded in this project

For details of plot mix in each sub-project see tables 2.1, 3.1, 4.1, & 5.1

TABLE 1.6 ESTIMATED TOTAL PROJECT COSTS BY TOWN

COMPONENT	HARARE		MARONDERA		KADOMA		CHINHOYI		TOTAL	
	Z$	US$	Z$	US$	Z$	US$	Z$	US$	Z$	US$
A. Land acquisition & surveying	454,000	417,680	66,000	60,720	47,000	43,240	64,800	59,616	631,800	581,256
B. Primary infrastructure	1,880,140	1,729,729	140,600	129,352	0	0	0	0	2,020,740	1,859,081
C. Site servicing	6,472,388	5,954,597	1,090,000	1,002,800	1,290,000	1,186,800	657,000	604,440	9,509,388	8,748,637
D. House construction	11,310,908	10,406,035	3,404,200	3,131,864	3,232,570	2,973,964	1,645,000	1,513,400	19,592,678	18,025,264
E. Community facilities	2,952,800	2,715,840	1,561,000	1,436,120	1,355,000	1,246,600	438,000	402,960	6,306,000	5,801,520
F. Technical assistance	800,000	736,000	88,000	80,960	50,000	46,000	72,000	66,240	1,010,000	929,200
SUB-TOTAL WITHOUT G.	23,869,436	21,959,881	6,349,800	5,841,816	5,974,570	5,496,604	2,876,800	2,646,656	39,070,606	35,944,958
G. Contingencies	1,630,564	1,500,119	1,060,400	975,568	1,058,000	973,360	438,000	402,960	4,186,964	3,852,007
TOTAL	25,500,000	23,460,000	7,410,200	6,817,384	7,032,570	6,469,964	3,314,800	3,049,616	43,257,570	39,796,964

Notes: For details of each component per town see tables 2.2, 3.2, 4.2, and 5.2

Assumes an exchange rate 0.92 per Zimbabwe dollar

PART 2 : HARARE (PHASE II) SUB-PROJECT

2.1. Parkridge East project design

The sub-project to be implemented in Harare is a continuation of the project funded under HG loan 613-HG-001. It is Phase II of the Parkridge/ Fontainbleau Housing Scheme and is known as Parkridge East. See Figure 2.1 for the location of the site. A total of 3264 serviced residential stands and associated community and commercial facilities will be developed on the 275 ha site. See Figure 2.2 for the project site design layout drawn up in conformity with guidelines outlined in Section 1.4. A complete list of items funded under the project is given in Table 2. .

A distinguishing feature of this phase of the Parkridge/Fontainbleau housing scheme is the presence of the major district centre which will serve the whole projeot. Provision is made in the site plan for district-level facilities such as a supermarket, cinema, health clinic, post office, petrol station, fire and ambulance facilities, police station, Dairy Marketing Board depot, etc. See Table 2.1 for an approximate land use profile.

2.2. Review of current status of Parkridge East

All site layout designs have been completed. Consulting engineers reporting to MOH have produced all necessary tender documents for roads and stormwater drainage and water and sewerage reticulation. Tenders were invited and six contracts for on-site works were awarded between February 1983 and May 1983 and are all well advanced. One off-site contract was awarded in June, 1983 and is in progress. Physical and financial progress monitoring of these works is under way. See table 2.5. for a summary of actual expenditure to date on the project.

All programmes relating to land servicing by COH, land allocation, house construction, community and commercial facilities, and manpower training are being planned but have not yet started. The policies and procedures adopted will be the same as those employed on Phase I of Parkridge/Fontainbleau. Refer to the current revised PDP for Phase I dated 26th January, 1984.

2.3. Parkridge East Finances

Tables 2.2 to 2.6 inclusive give details of the proposed financing and implementation schedule of the Parkridge East Scheme. The estimated total cost of the works is Z$25,500,000 (US$23,460,000) of which USAID will fund Z$13 668,000 (US$12 574,000) or 54%.The average price of a serviced residential stand is Z$755 (US$725) and is affordable by all households earning Z$76 (US$70) or more per month, i.e. 85% of all households in Harare. See Table 2.3. The maximum BL of Z$3,100 (US$2 850) is sufficient to acquire materials for a four-roomed house including electrical fittings at July 1983 prices. This maximum loan is affordable by households earning the median urban household income of Z$175 (US$161). Implementation of the scheme is expected to be completed by the end of FY 1985/86.

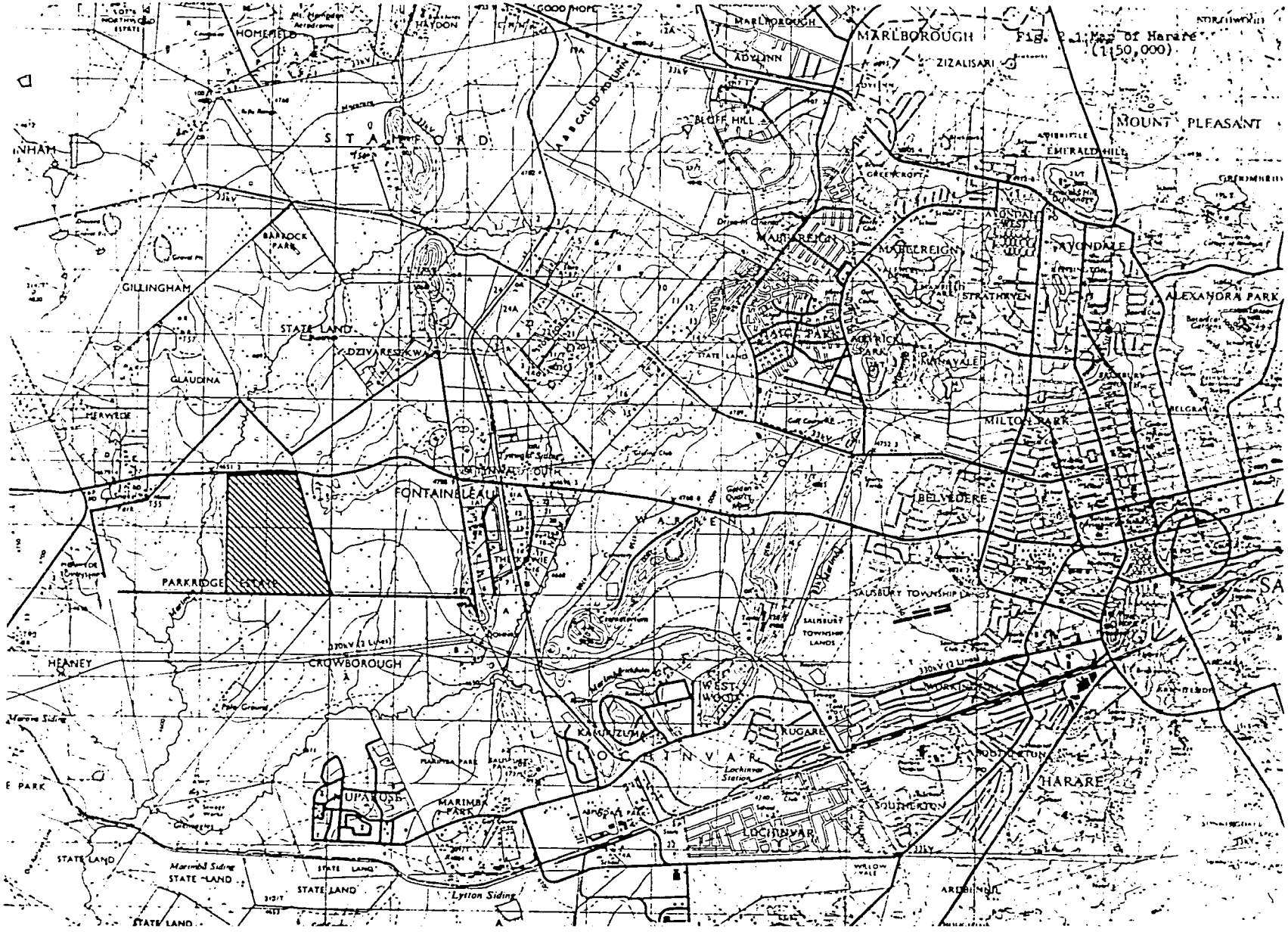

Fig. 2.1 Map of Harare (1:50,000)

MAINRIDGE/FONTAINBLEAU PHASE II FINANCIAL CONTROL CHART DATE: 29 FEB 84

PROJECT COMPONENT	REV EST (87/83)	SPENT TO 30.6.83	ALLOCATION 83/84	SPENT 83/84 TO 31.12.83	MONTHLY EXPENDITURE JANUARY 84	FEBRUARY 84	MARCH 84	APRIL 84	MAY 84	JUNE 84	OVERALL EXP TO DATE
A. LAND											
1. Acquisition	233,000	233,000	0	0	0	0					233,000
2. Survey	221,000	178,000	43,000	19,027	970	370					198,375
Sub-total for A	454,000	411,000	43,000	19,027	970	370	0	0	0	0	431,375
B. PRIMARY INFRASTRUCTURE											
1. Glen High road (47/82)	1,590,140	0	1,590,140	443,649	87,020	82,000					632,645
2. Bulk water supply	290,000	0	290,000	0	0	0					0
Sub-total for B	1,880,140	0	1,880,140	443,649	87,020	82,000	0	0	0	0	632,645
C. SITE SERVICING											
1. Roads & drains											
Unit 7, DC (31/82)	1,241,250	506,000	735,250	249,990	0	175,673					951,581
Unit 5, 6S (33/82)	859,960	0	859,960	369,298	110,297	45,656					445,251
Unit 4H, 8 (35/82)	431,655	0	431,655	227,355	104,910	44,608					376,873
Sub-total for R&D	2,732,873	506,000	2,226,873	846,541	215,207	265,937					1,793,705
2. Water & sewers											
Unit 7, DC (32/82)	499,410	299,000	200,410	166,743	4,723	0					470,466
Unit 5, 6S (34/82)	942,765	0	942,765	384,689	44,282	0					456,971
Unit 4H, 8 (36/82)	574,090	0	574,090	385,039	0	43,113					428,952
Sub-total for W&S	2,016,265	299,000	1,717,265	937,271	71,005	43,113					1,356,389
3. Tower / street lights	340,000	0	275,000	0	0	0					0
4. Electricity	1,275,000	0	690,000	0	0	0					0
5. Street / plot numbers	12,250	0	0	0	0	0					0
6. Unit 6 shopping centre	76,000	0	0	0	0	0					0
Sub-total for C	6,472,388	805,000	4,909,138	1,743,032	286,212	309,050	0	0	0	0	3,144,094
D. HOUSE CONSTRUCTION											
1. Capital for house loans	9,107,000	0	0	0	0	0					0
2. Construct rental units	2,203,100	0	0	0	0	0					0
Sub-total for D	11,310,900	0	0	0	0	0	0	0	0	0	0
E. COMMUNITY FACILITIES											
1. Primary schools (5)	1,750,000	0	0	0	0	0					0
2. Secondary schools (1)	770,000	0	0	0	0	0					0
3. Health clinic	150,000	0	0	0	0	0					0
4. Market / Toilet (2)	95,000	0	0	0	0	0					0
5. Admin / community (1)	187,000	0	0	0	0	0					0
Sub-total for E	2,952,000	0	0	0	0	0	0	0	0	0	0
F. TECHNICAL ASSISTANCE											
1. Project admin (by COH)											
Salaries	100,000			0	0	0					0
On-costs	100,000			0	0	0					0
Sub-total for admin	200,000	0	0	0	0	0	0	0	0	0	0
2. Professional services											
JBP proj manage (10A)	550,000	404,070	59,000	7,290	17,945	1,290					433,215
BCHOOP eng design (1H)				26,150	0	0					26,150
JBP supervision (10C)				26,433	0	5,592					32,025
Ascon soil tests (10F)				31,880	0	13,671					45,551
Site security (25A)	0	21,130		4,798	0	3,399					29,327
Sub-total for prof fees	550,000	420,000	59,000	96,441	17,945	23,842					566,268
Sub-total for F	750,000	420,000	59,000	96,441	17,945	23,842	0	0	0	0	566,268
TOTAL EXCLUDING CONTINGENCIES	23,819,434	1,644,000	6,091,270	2,322,929	392,155	415,290	0	0	0	0	4,774,382
G. CONTINGENCIES											
1. Physical	794,964										
2. Price (inflation)	885,600										
Subtotal for G	1,680,564										
GRAND TOTAL	25,500,000	1,644,000	6,091,270	2,322,929							
Funded/executed by COH	433,000	233,000	0	0	0	0	0	0	0	0	233,000
Funded by GOZ											
Executed by MCHH direct	7,184,270	1,411,000	5,636,270	2,322,929	392,155	415,290	0	0	0	0	4,541,382
Executed by COH direct	16,200,158	0	1,255,000	0	0	0	0	0	0	0	0
Contingencies	1,680,564										

Exchange rate Z$ to US$ 0.92

TABLE 2.5 PARKRIDGE / FONTAINBLEAU PHASE II IMPLEMENTATION SCHEDULE

PROJECT COMPONENT	AGENCY	FY 82/83 Quarter 1	2	3	4	FY 83/84 Quarter 1	2	3	4	FY 84/85 Quarter 1	2	3	4	FY 85/86 Quarter 1	2	3	4
A. LAND																	
1. Acquisition	COH	X															
2. Survey	MCNH		XXX						XXX	XXX							
B. PRIMARY INFRASTRUCTURE																	
1. High Glen road	MCNH					XXX	XXX	XXX	XXX								
2. Bulk water supply	COH						XXX	XXX	XXX								
C. SITE SERVICING																	
1. Roads & drains	MCNH			XXX	XXX	XXX	XXX	XXX									
2. Water & sewers	MCNH			XXX	XXX	XXX	XXX	XXX									
3. Tower / street lights	COH								XXX	XXX	XXX						
4. Electricity	COH									XXX	XXX	XXX					
5. Landscaping & parks	COH																
6. Street / plot numbers	COH									XXX							
7. Shopping areas servicing	MCNH								XXX	XXX							
D. HOUSE CONSTRUCTION																	
1. Capital for house loans	COH											XXX	XXX	XXX	XXX	XXX	XXX
2. Construction of rental	COH										XXX	XXX	XXX	XXX	XXX	XXX	
E. COMMUNITY FACILITIES																	
1. Primary schools (5)	COH										XXX	XXX	XXX	XXX	XXX	XXX	
2. Secondary schools (1)	MCNH											XXX	XXX	XXX	XXX		
3. Health centre	COH												XXX	XXX	XXX		
4. Markets / toilets	COH										XXX	XXX					
5. Administrative office	COH									XXX	XXX						
F. TECHNICAL ASSISTANCE																	
1. Project administration	COH																
Beneficiary identificati									XXX								
Beneficiary selection										XXX	XXX						
Plot allocation											XXX	XXX					
Stores operation								XXX	XXX	XXX	XXX	XXX	XXX	XXX	XXX	XXX	XXX
Technical advice										XXX	XXX	XXX	XXX	XXX	XXX	XXX	XXX
Staff training									X	X	X	X	X	X	X	X	X
Monitoring & evaluation									X	X	X	X	X	X	X	X	X
2. Professional services	MCNH	XXX	XXX	XXX	XXX	XXX	XXX	XXX	XXX								

PART 3 - MARONDERA SUB- PROJECT

3.1 Nyameni Project design

The proposed project site was agreed after discussion with the Local Authority. The site comprises a total area of some 88 ha located between 2 and 3 km south of the Marondera Town Centre to the west of the Ruzawi Road. See figure 3.1

The site falls within the Municipal area and is owned by the local authority. A portion of the site is currently zoned for high density housing and the remainder for rural use.

The site is bounded on the north by institutional uses including two new school sites, on the east by the main link to town, The Ruzawi Road, and on the west by a river which flows roughly parallel to, and 1 km to the west of the Ruzawi Road. To the south no immediate site constraints exist and it is in this direction that future expansion of the scheme would be expected to occur. Surrounding land uses to the south and east are generally agricultural uses or unused land, while further to the west an area of low density residential housing exists.

The site itself has a number of important characteristics which play a significant role in determining the proposed pattern of development for the scheme.

The site is bisected by the proposed alignment of the town's ring road. The approximate alignment of this reservation follows the line of a high voltage power-line crossing the southern part of the site from east to west. Although this road may only be developed in the long term future it is necessary to pto protect the reservation from other development, and to plan for the future integration of the ring road with the proposed site circulation network.

On the western side along the river line very wet vlei areas occur which prohibit building construction within about 70m to 100m of the river. A large area of vlei also extends in a north-east direction from the river into the centre of the site.

These areas of wet land are unsuited for residential use, but offer opportunities for development of open space and recreational uses. Housing areas should therefore take as much advantage as possible of the remaining drier land.

A further feature of the site is the existence of well wooded areas comprising mature indigenous trees. The main woodland area lies in a belt immediately west of and roughly parallel to the Ruzawi Road. This woodland has the potential for providing a very attractive environment for the housing scheme and it is considered important that development be directed to conserve as much of the woodland, particularly the larger trees, as possible.

As undeveloped parkland these area run the risk of denudation. It is therefore preferable that large stands be provided in these areas on the assumption that, although some trees will go to make way for building, residents are likely to appreciate the advantages of preserving some of the mature trees in their own gardens.

The proposed layout is shown in figure 3.2.

The proposed development comprises approximately 1 000 stands, 70% of which are north of the proposed ring road. If future expansion is envisaged to the south of this scheme, then the 300 houses south of the ring road would logically integrate with later development.

3.2. Review of current status

All preliminary site planning is complete and an application to Ministry of Local Government and Town Planning for approval of the scheme under section 160 of the Urban Councils Act was made in September, 1983. The Marondera Municipal Council has applied to Ministry of Local Government and Town Planning for the necessary borrowing powers to finance the scheme. The Town Engineer is proceeding with detailed engineering design of the services. Detailed planning of the house construction programme remains to be done.

3.3. Nyameni Project Finances

Tables 3.2 to 3.6 inclusive give details of the proposed financing and implementation schedule for Marondera's project. The estimated total cost of the works is Z$7,410,000 (US$6,817,000) of which USAID will fund Z$5,575,000 (US$5,129,000) or 75%. The average price of a serviced residential stands is Z$577 (US$530) and is affordable by all households earning Z$54 (US$49) or more per month, i.e. 90% of all households in Marondera. See Table 3.4. The Maximum BL of Z$3,100 (US$2,850) is sufficient to acquire materials for a four-roomed house including electrical fittings and is affordable by people earning Z$154 (US$141) per month . Implementation of the project is expected to be completed by the end of FY 1985/86.

Fig. 3.1 Map of Marondera (1:50,000)

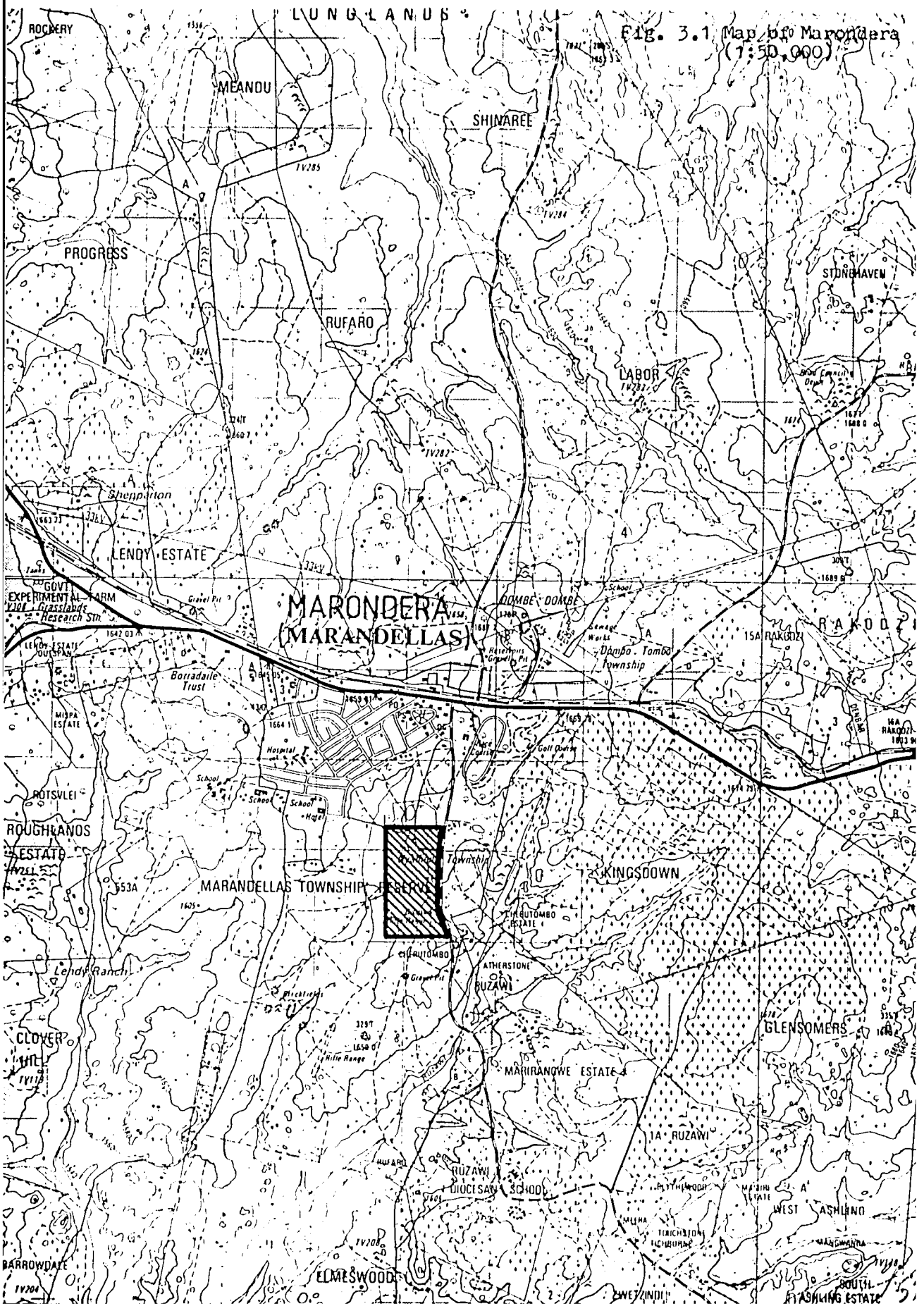

TABLE 3.5 NYAMENI IMPLEMENTATION SCHEDULE

PROJECT COMPONENT	FY 83/84 QUARTER 1	2	3	4	FY 84/85 QUARTER 1	2	3	4	FY 85/86 QUARTER 1	2	3	4
A. LAND												
1. Acquisition	X											
2. Survey			XXX									
B. PRIMARY INFRASTRUCTURE												
1. Roads & Stormwater drains		XXX	XXX	XXX								
2. Bulk water supply		XXX	XXX	XXX								
3. Trunk sewer & treatment		XXX	XXX	XXX								
C. SITE SERVICING												
1. Roads & drains				XXX	XXX	XXX	XXX					
2. Water & sewers				XXX	XXX	XXX	XXX					
3. Tower lights						XXX	XXX					
4. Electricity						XXX	XXX	XXX				
D. HOUSE CONSTRUCTION												
1. Aided self-help units						XXX	XXX	XXX	XXX	XXX	XXX	XXX
2. Rental units					XXX	XXX	XXX					
E. COMMUNITY FACILITIES												
1. Primary school						XXX	XXX					
2. Secondary school							XXX	XXX	XXX			
3. Health centre								XXX	XXX	XXX		
4. Market / toilet						XXX	XXX					
5. Admin / community centre								XXX	XXX	XXX		
6. Demonstration houses (6)					XXX							
F. TECHNICAL ASSISTANCE												
1. Beneficiary selection				XXX	XXX							
2. Plot allocation					XXX	XXX						
3. Stores operation						XXX	XXX	XXX	XXX	XXX	XXX	XXX
4. Technical advice						XXX	XXX	XXX	XXX	XXX	XXX	XXX
5. Staff training				X	X	X	X	X	X	X	X	X
6. Monitoring & evaluation				X	X	X	X	X	X	X	X	X

PART 4 - KADOMA SUB-PROJECT

4.1 Waverley Project Design

The proposed project site was agreed after discussion with the local municipality. The site comprises a total area of some 80 ha located between 0,5 and 1,5 km south-east of the Kadoma Town Centre. Of this area, some 57 ha is owned by the municipality, while the remainder is the subject of proposed acquisition from Zimbabwe National Railways. See figure 4.1

The site is part of the eastern portion of the town located between the rail line (which acts as a bit of a communications barrier between east and west) and the Mshuma River. This area of town is currently less developed than the western side of the town and is generally zoned for industrial and residential uses. The project site itself, however, is well suited to low-income residential use because of its close proximity to the town centre and the industrial area.

The immediate surrounds of the project site comprise residential stands, and vacant or agricultural plots.

The site itself has no very prominent natural features, being fairly gently sloping open land in character, but becoming wet towards the river.

One noteable constraint on the proposed development is the existing north west to south-east grid pattern of the site's existing peripheral roads and this suggests that the internal layout should logically adapt to a rectilinear pattern. This has been achieved by the use of internal loop roads with short cul-de-sac branches. While maintaining the basic grid structure, the housing pattern has been carefully modified to create small housing clusters, grouped around small cul-de-sac heads which act as semi-private spaces. This layout combines the mobility afforded by a grid pattern (particularly for the pedestrian) with the safety and security of protected group spaces around which small numbers of houses are clustered. See figure 4.2

Additional small open spaces suitable for kicking a ball around are located within close proximity to all households.

As a central focus for the housing scheme a commercial complex is proposed which will accommodate any community facilities, market, bus station, offices and service industry stands. Adjacent to this centre, the school site and its buildings will be suitable for use for community functions after school hours. The buildings in the commercial centre face north onto the main road. The focus of activity is the centrally located bus terminus and market place. Service access is from the rear.

The Waverley scheme provides adequate land for 2 primary schools and a secondary school, to be developed as required. The high proportion of space allocated for community facilities reflects the reservation of land for these 3 school sites within the scheme. See Table 4.1

4.2. Review of current status

The Waverley project site plan was produced by the Mashonaland Provincial Planning Office in February 1983. A full Council of Kadoma approved the plan and authorized its submission to the Ministry of Local Government and Town Planning for approval under section 160 in March 1983. The prooess of acquiring the northern 22.8 ha from the National Railways of Zimbabwe is in hand with transfer expected in April 1984. It is intended to commence installation of the infrastructure services at the southern end of the site in January 1984 using direct labour. Detailed planning of the house construction programme remains to be done.

4.3. Waverley project finances

Tables 4.2 to 4.6 inclusive give details of the proposed financing and implementation schedule for Kadoma's project. The estimated total cost of the works is Z$7,032,000 (US$6,469,000) of which USAID will fund Z$5 422,000 (US$4 988,000) or 77%. The average price of a serviced residential stand is Z$551 (US$506) and is affordable by households earning Z$61 (US$56) per month or more, i.e. 88% of all of Kadoma's households. See Table 4.4. The maximum BL of Z$2,900 (US$2,670) is sufficient to acquire materials for a three roomed house excluding electrical fittings and is affordable by households earning Z$155 (US$142) per month. Implementation of the project is expected to be complete by the end of FY 1985/86.

Fig. 4.1: Map of Kadoma (1:50,000)

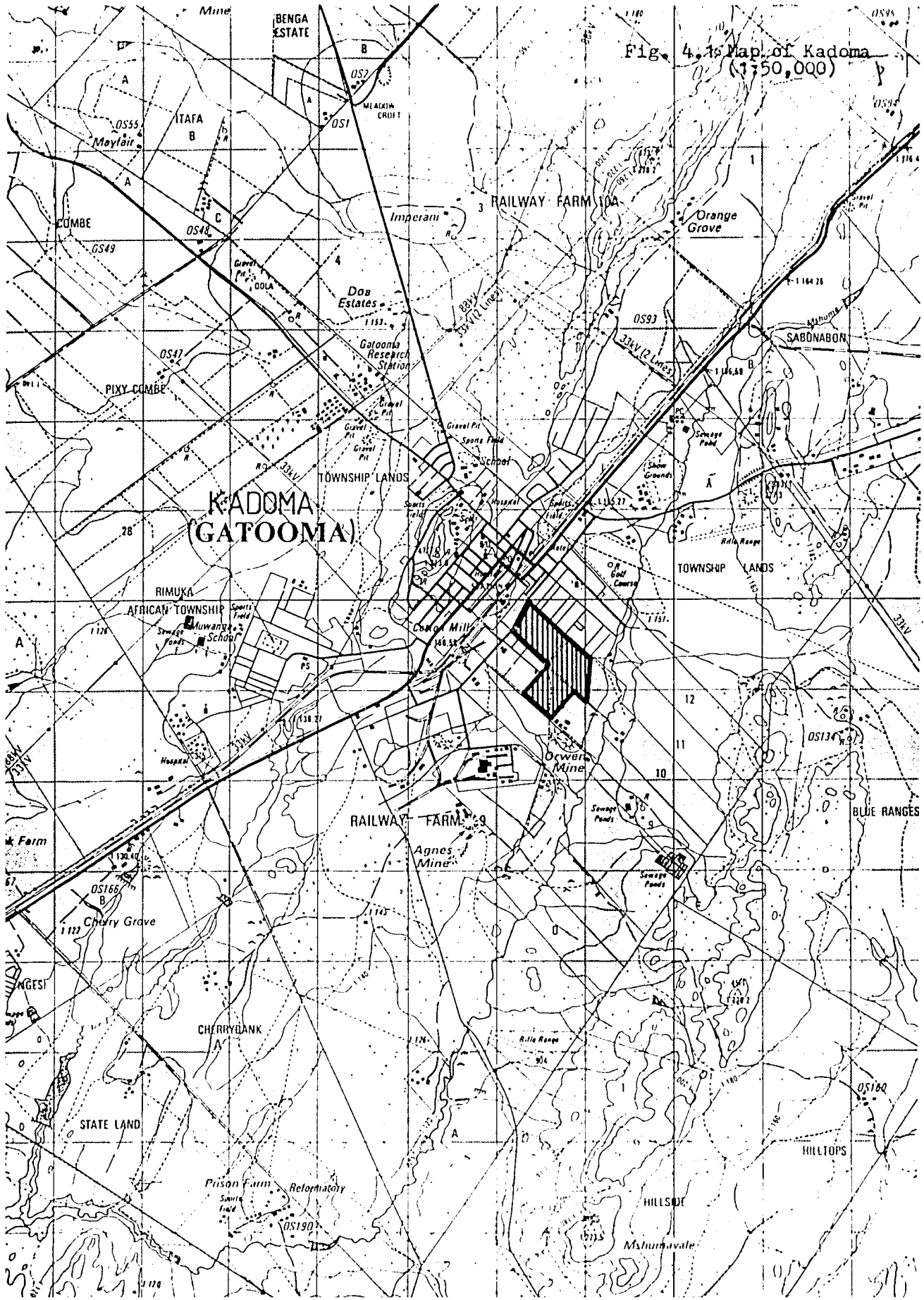

PART 5 : CHINHOYI SUB-PROJECT

5.1. CHINHOYI STREAM PROJECT DESIGN

The proposed site of the 500 stands scheme was agreed after discussion with the Local Authority. The total site comprises an area of 64.4 hectares located between 1.0km and 1.5km east of Chinhoyi Town Centre. All land is owned by the municipality and is being developed as a scheme for a total of 900 stands, of which the first 400 (Phase I) is being funded by GOZ and does not form part of the USAID HG program. The remaining 500 plots, designated Phase II, are to be funded by USAID.

The site is part of the eastern portion of the town located immediately south of the Chinhoyi Stream, west of an ESC wayleave, and east of the Gadzema Road. It is suited to low-income residential use because of its proximity to the town centre and the industrial area. See figure 5.1. The site itself has no very prominent natural features except for a distinct slope northward to the Stream.

See figure 5.2. for the site layout plan.

5.2. REVIEW OF CURRENT STATUS

Phase I of Chinhoyi Stream project, entirely funded by GOZ is already underway. The Town Engineer is installing infrastructure services and constructing brigade-built houses The Municipality has instructed their engineering consultants, Sir MacDonald and Partners to do the detailed engineering design of services for Phase II, the USAID funded portion and this work is now complete. The land surveyor has completed surveying the plots. Detailed planning of the house construction programme remains to be done. The CMC resolved to borrow the necessary funds from MOH and the intention to do so was gazetted in early October, 1983.

5.3. CHINHOYI STREAM PROJECT FINANCES

Tables 5.2 to 5.6 inclusive give details of the proposed financing and implementation schedule for Chinhoyi's project. The estimated total cost of the works is Z$3,314,000 (US$3,049,000) of which USAID will fund Z$2,508,000 (US$2 307,000) or 76%. The average price of a serviced residential stand is Z$500 (US$460) and is affordable by households earning Z$74 (US$68) per month or more, i.e. 90% of all households in Chinhoyi. See Table 5.4. The maximum BL of Z$2,550 (US$2,350) is sufficient to acquire materials for a two room house excluding electrical fittings and is affordable by households earning Z$155(US$143). Implementation of the scheme is expected to be completed by the end of FY 1985/86.
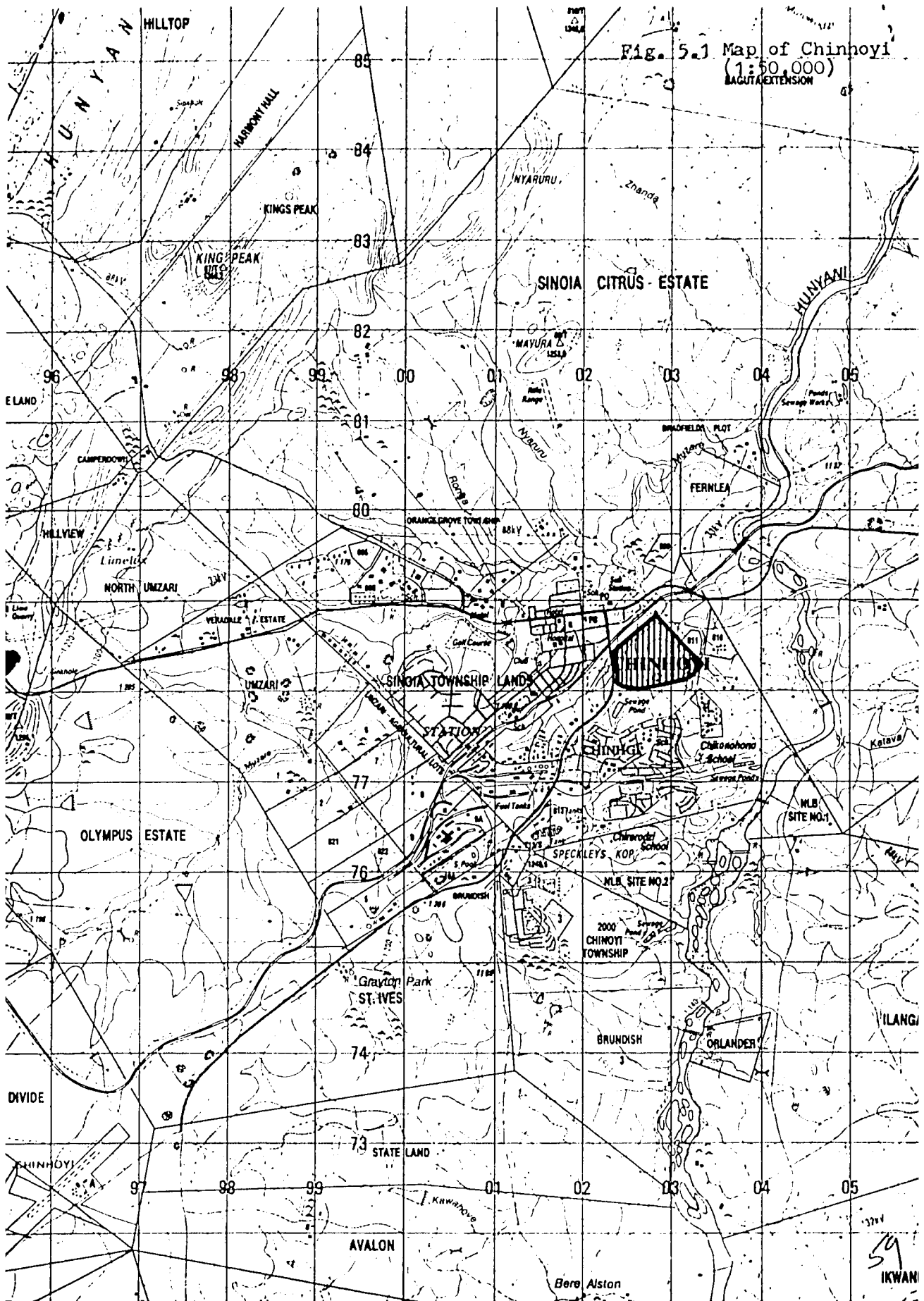
Fig. 5.1 Map of Chinhoyi (1:50,000)