STUDY FOR FEASIBILITY OF UTILIZING THE AID-OWNED SURPLUS SCADA SYSTEM IN THE HASHEMITE KINGDOM OF JORDAN FOR THE WATER AUTHORITY OF JORDAN

prepared by

Laramore, Douglass and Popham
and
Gilbert/Commonwealth International, Inc.
(Subcontractor)

for

U. S. Agency for International Development

IQC OTR-1406-I-00-5043 W.O. No. 2
PROJECT No. 278-0234

APRIL 1986

PD-AAT-240

ISN-44802

Gilbert/Commonwealth International, Inc. engineers and consultants

P.O. Box 1498, Reading, Pennsylvania 19603/Telephone 215-775-2600, Cable Gilasoc/Telex 836-431

April 23, 1986

USAID/Jordan
Washington, DC 20523

Attention: Mr. Emile Sahoury,
Project Officer

RE: AID-Owned Surplus SCADA System
IQC No. OTR-1406-I-00-5043-00
Work Order No. 2
Project No. 278-0234

Gentlemen:

Enclosed are five (5) copies of the final report "Study for Feasibility of Utilizing the AID-Owned Surplus SCADA System in the Hashemite Kingdom of Jordan". This report has been prepared by Gilbert/Commonwealth International, Inc. under a subcontract agreement with Laramore, Douglass and Popham, the prime contractor under the subject I.Q.C.

LDP and GC II appreciate having had the opportunity to serve USAID on this assignment. We believe that the recommendatons in the report will be found to be in the best long term interests of USAID and WAJ.

Very truly yours,

R. T. Kase

R. T. Kase
Director of Special Projects

RTK:myb

cc: R. Kramer, LDP (w/copy of report)
AID Center for Development Information & Evaluations (w/2 cc of report)

CONTENTS

SECTION	TITLE	PAGE
1.0	INTRODUCTION	1-1
1.1	BACKGROUND	1-1
1.1.1	The Figeh Project	1-1
1.1.2	AID Purchase of SCADA Equipment	1-3
1.1.3	Study of Figeh SCADA Application to the Water Authority of Jordan System	1-4
1.1.4	WAJ SCADA - Dispatching Objectives	1-4
1.2	DISPATCHING SYSTEMS	1-5
1.2.1	Components of a Dispatching System	1-5
1.2.2	Definitions	1-7
2.0	AID-OWNED SCADA EQUIPMENT	2-1
2.1	INTRODUCTION	2-1
2.2	EQUIPMENT DESCRIPTION	2-1
3.0	WAJ WATER SYSTEM	3-1
3.1	SUMMARY OF WAJ WATER SYSTEM	3-1
3.2	SITE VISITS	3-9
4.0	STUDY METHODOLOGY	4-1
4.1	APPROACH TO DETERMINING SCADA MONITORING AND CONTROLS	4-1
4.2	CRITERIA FOR WATER SYSTEM MONITORING AND CONTROL	4-2
4.2.1	RTUs	4-3
4.2.2	RTU Points	4-4

CONTENTS (Cont'd)

Section	Title	Page
5.0	WAJ SCADA REQUIREMENTS	5-1
5.1	ESTIMATES OF RTU's and TRU POINTS	5-1
5.2	SUMMARY OF TOTAL RTU AND RTU POINTS REQUIRED	5-3
5.3	APPLICATION OF AID OWNED SCADA EQUIPMENT	5-3
6.0	COMMUNICATIONS CONCEPTS	6-1
7.0	SCADA SYSTEM COST ESTIMATE	7-1
7.1	INTRODUCTION	7-1
7.2	SCADA SYSTEM	7-2
7.3	COMMUNICATIONS SYSTEM	7-5
7.4	WATER SYSTEM	7-5
7.5	DISPATCHING SYSTEM	7-8
8.0	RECOMMENDATIONS	8-1
8.1	APPROACH	8-1
8.2	"CAN IT BE USED"	8-1
8.3	"SHOULD IT BE USED"	8-3
8.3.1	Feasibility of a Dispatching Center	8-4
8.3.2	Implementation Schedule	8-5
8.3.3	Capacity of AID-Owned SCADA Equipment	8-5
8.3.4	Age of AID-Owned SCADA Equipment	8-7
8.3.5	Project Cost	8-7
8.4	RECOMMENDATIONS	8-8

CONTENTS (Cont'd)

Section	Title	Page
TABLES		
3-1	Population of Kingdom and Population Served by WAJ	3-2
3-2	WAJ Water System Facilities - For Monitoring and Controlling at Dispatching Center - Combination of Facilities in WAJ System	3-4
3-3	Summary of WAJ System Facility Potential for SCADA	3-6
5-1-1 to 5-1-8	RTU and RTU Point Count Estimates by Region and Governate	5-4 to 5-12
5-2	RTU and RTU Point Count Estimate - All WAJ Regions	5-15
7-1	Example SCADA Contract Package	7-2
7-2	Cost Estimates for WAJ SCADA Systems	7-4
7-3	Comparison of SCADA System Costs - Figeh & WAJ	7-6
FIGURES		
2-1	Arrangement of SCADA Equipment - Figeh Project	2-2
3-1	Hashemite Kingdom of Jordan - Governates and WAJ Regions	3-2

CONTENTS (Cont'd)

Section	Title	Page
FIGURES (Cont'd)		
6-1	Communications System - Combustions and Alternative Approaches	6-3
8-1	Implementation Schedule	8-6
APPENDICES		
A	Definitions	
B	RTU Point Requirements by Facility and Function.	
C	Sample Work Sheets - RTU Point Estimates	

5

INTRODUCTION

1.1 BACKGROUND

1.1 The Figeh Project

In 1981, as one element of a five-part improvement program, the Etablisement Public des Eaux de Figeh (Figeh) awarded three contracts for construction of pumping stations and a dispatching system.

The three contracts were:

Contract A — Pumping Stations and Dispatching Center: Construct buildings and supply and install mechanical and electrical equipment including work to install and connect RTUs to distribution system facilities. The Engineer's cost estimate for the dispatching center building and to install and connect RTUs was $1,255,000 plus LS 4,485,000.

Contract B — Dispatching System: Supply and install a Supervisory Control and Data Acquisition (SCADA) system including dual computers with peripherals, remote terminal units (RTUs), software, miscellaneous associated equipment, and services for system startup and training of Figeh staff. The basic contract price was $4,744,023 plus LS 2,398,303.

Contract C — Communications Sub-system: Supply and install radios at RTU sites, at Figeh headquarters and at master repeater station, battery power supplies at remote sites, cable connections to RTUs and to water system control points near RTUs, and services for system startup and training of Figeh staff. The basic contract price was $3,232,074 plus LS 4,400,069.

At the time the project was bid the offical rate of exchange was LS3.9 = $1.00.

Certain works in the Figeh distribution system required to make the overall Dispatching System operational had already been or were being installed under distribution systems improvement contracts. These included pressure regulating and control valves, pressure recorders and flow-meters which were to be connected to RTUs and radios installed under Contracts B and C. Connections to these system control and recording points were to be made under Contracts A or C.

The dollar costs of the three contracts were funded under a United States Agency for International Development (USAID) loan to the Government of the Syrian Arab Republic and through a project agreement with Figeh.

In late 1981, Contracts B and C were awarded to one United States (U.S.) contractor. In 1982, Contract A was awarded to a government-owned Syrian contractor. Work on all three contracts started in September 1982.

Through October 1983, the US contractor had ordered most of the equipment for Contracts B and C. He was working on hardware integration tests of the computer and RTUs in preparation for software integration to be followed by a full factory acceptance test followed by shipment to Syria.

Final assembly and testing of radios for Contract C had been postponed for several months waiting a Syrian government decision on the allocation of a radio frequency band.

1.1.2 AID Purchase of SCADA Equipment

In November 1983, following major incidents straining US/Syrian relations, the US Congress passed legislation cutting off nearly all USAID capital project funds to Syria, including dollar funds for the Figeh contract for the Dispatching System. When Figeh was not able to show any alternate source for dollar funding, the US contractor stopped work and submitted claims to USAID for work completed and not paid for, termination costs and other costs he felt were due for work in progress.

USAID retained Gilbert Associates, Inc., the design consultant for the Figeh Dispatching System to determine the value of the work completed on Contract B as of November 1983 based on contract milestone payment terms. Other amounts claimed by the contractor resulting from contract termination would be handled under a separate claim procedure.

At some time in late 1984 or early 1985, USAID purchased from the U.S. contractor the SCADA hardware including the two computers, substantial peripheral equipment and thirty seven RTUs. The equipment was located at a subcontractor's facility in Atlanta, Georgia. USAID also paid for several items of software which have direct application to the SCADA system but whose present license agreement needs further investigation. USAID also paid the contractor for partial development of the water system operating software that would only have application to the Figeh system. In addition, USAID also paid for a substantial part of the engineering design required from the contractor for the Mimic Board, air conditioning, UPS system, etc. that would not have use on another project.

Since the contractor had not billed for several items (UPS system, diesel generator, air conditioning equipment, mimic board, and similar items) USAID did not pay for or purchase these items in the

payment made for work done prior to November 1983. It is likely that the U.S. contractor has costs for many of these items in his outstanding claim to USAID for costs or commitments made to suppliers of this equipment prior to November 1983.

The SCADA equipment and software owned by USAID is described in detail in Section 2 of this report.

1.1.3 Study of Figeh SCADA Application to the Water Authority of Jordan (WAJ) System

USAID wishes to dispose of the SCADA equipment and software it has purchased from the US contractor. The Water Authority of Jordan (WAJ) has expressed an interest in obtaining the equipment as part of a SCADA Dispatching System it is planning for the water supply system of Jordan. Following this expression of interest, USAID, under an Indefinite Quantity Contract (IQC) with Laramore, Douglass and Popham (LDP) authorized a study to determine the technical and practical feasibility of using the AID-owned surplus system in Jordan. Gilbert/Commonwealth International, Inc. (GCII), a subcontractor to LDP having designed and supervised construction of the Figeh Dispatching System, was selected to perform the study.

1.1.4 WAJ SCADA - Dispatching Objectives

WAJ's expectations from the study are consistent with the objective and work-scope of USAID in its Work Order to LDP. A refinement of the objective is to determine the extent to which the SCADA equipment could support parts of Jordan, particularly Greater Amman, should it be determined that the AID-owned SCADA equipment does not have the capacity for the entire country. In either case, the need for additional SCADA hardware and software should be indicated in the study.

1.2 DISPATCHING SYSTEMS

1.2.1 Components of a Dispatching System

Dispatching Systems are composed of three major elements, the SCADA system, the Communications system, and the addition of RTU compatible interface features to the operating water system components with the wiring from the water system components to the RTU. The following description of each component is to clarify further sections of this report and to avoid misunderstandings in terminology, particularly as related to the AID-owned SCADA equipment and equipment needed to complete the SCADA system.

A SCADA System is composed of:

- The central processing unit (CPU)
- Main memory
- Disc drive
- Loggers
- CRT display system
- System console
- Other associated hardware required for the complete system configuration
- The special application software specific to running the computer with its associated hardware
- Software designed specific to the operation of the system for which the dispatching system is being developed
- RTUs which are located at points in the operating system from which status reports and/or control functions are required for improving management and control of the operating system.

Depending on the particular project and the breakdown of contract packages, the SCADA contract package can include ancilliary equipment such as UPS (uninterruptable power supply), air

conditioning, and fire protection equipment. System startup and training of owner-personnel and an inventory of spare parts are normally included in the SCADA System contract package.

Based on this description of a SCADA system, it is appropriate to make the following point - AID owns SCADA equipment which is part of a SCADA system. AID does not own a complete SCADA system.

The Communication System can have substantial variations in its physical components depending not only on the type and make-up of the project, but also the availability and reliability of existing telecommunications systems and topography within the service area of the operating agency to be covered by the Dispatching System.

Communications System components will include all or some of the following equipment and materials:

- Remote radio terminal units at very high frequencies in the range of 950 to 2000 MHz band when line of site transmission is possible.
- Remote radio terminal units in the 150 to 450 MHz band when line of site is not available (this band not normally available due to demands with higher priorities).
- Battery power supplies and antenna required for radio operation.
- Cable connections from operating water system facilities to be monitored and controlled to the RTUs and between RTUs and the radio or the telephone system which connect to the public or private telecommunications system tied back to the computer.

When radio communication is not practical or suitable, a telephone wire system becomes an integral part of the Dispatching System's Communication System. While in some cases this system component is added at relatively low cost, it will have annual operating costs that become part of the Dispatching System cost. Analysis of monitoring and controlling requirements is necessary to minimize this annual cost.

The third element in a Dispatching System is the special requirements at the facilities to be monitored or controlled. Additional electric contacts, switches, motor-operated valves, flow-meters, pressure and level controls, etc. must be added to existing units or the units up-graded to provide the RTU compatible interfaces and the physical interconnections required for the management and control capability of a computerized Dispatching System.

1.2.2 Definition of Terms

To supplement these descriptions of the components of a Dispatching System for water supply facilities, a listing of the definition of many of the terms and acronyms used in this report is included in Appendix A.

1.3 ACKNOWLEDGEMENTS

Gilbert/Commonwealth International, Inc. acknowledges with appreciation the helpful attitude and support provided by many persons from the U.S.A.I.D. Mission in Jordan and from the President and staff of WAJ. This support was shown by all with whom we met and worked during the project team's stay in Amman including the WAJ staff at numerous facilities visited to familiarize the team with WAJ operations. We wish to especially acknowledge the support of the following:

USAID	WAJ
Bernard E. Donnelly, Chief Engineer	Eng. M.S. Kilani, President
Wm. A. Libby, Deputy Chief Engineer	Abdelrahman Omari, Director Developing Department
Emile Sahoury, Project Officer	Bassan S. Al-Tal, Deputy Director, Design and Planning Department
	Mohammed L.A. Zu'bi, Public Relations Mgr.
	Eng. Ma'in Boab

2.0 AID-OWNED SCADA EQUIPMENT

2.1 INTRODUCTION

The components of the SCADA system available from USAID are listed below with a description of each item provided. Figure 2-1 depicts the arrangement of the equipment as it was planned for the Figeh Water Supply Project. The figure illustrates a complete computer/control room. The hardware items that are not part of the AID-owned equipment are indicated by a line through them.

Equipment List

	Quantity
- Line Printer, HP 26085	1
- Disc Drive, HP 7920	2
- Programmer I/O Terminal HP 2545A	2
- Dual Master Cabinet equipped with Dual HP 2111F Computer (CPU)	4
- Color Graphic CRT, HP 3055	4
- Character/Graphics Printer, Centronics 704	2
- Magnetic Tape Drive, HP 7970E	1
- Remote Terminal Unit - Large, MFR 3010	9
- Remote Terminal Unit - Small, MRP 3050	28

2.2 EQUIPMENT DESCRIPTION

The following are brief descriptions of the AID-owned SCADA equipment:

a. Line Printer, Model HP 26085

The line printer is a free-standing device capable of printing 320 lines per minute. The printer will be utilized as a

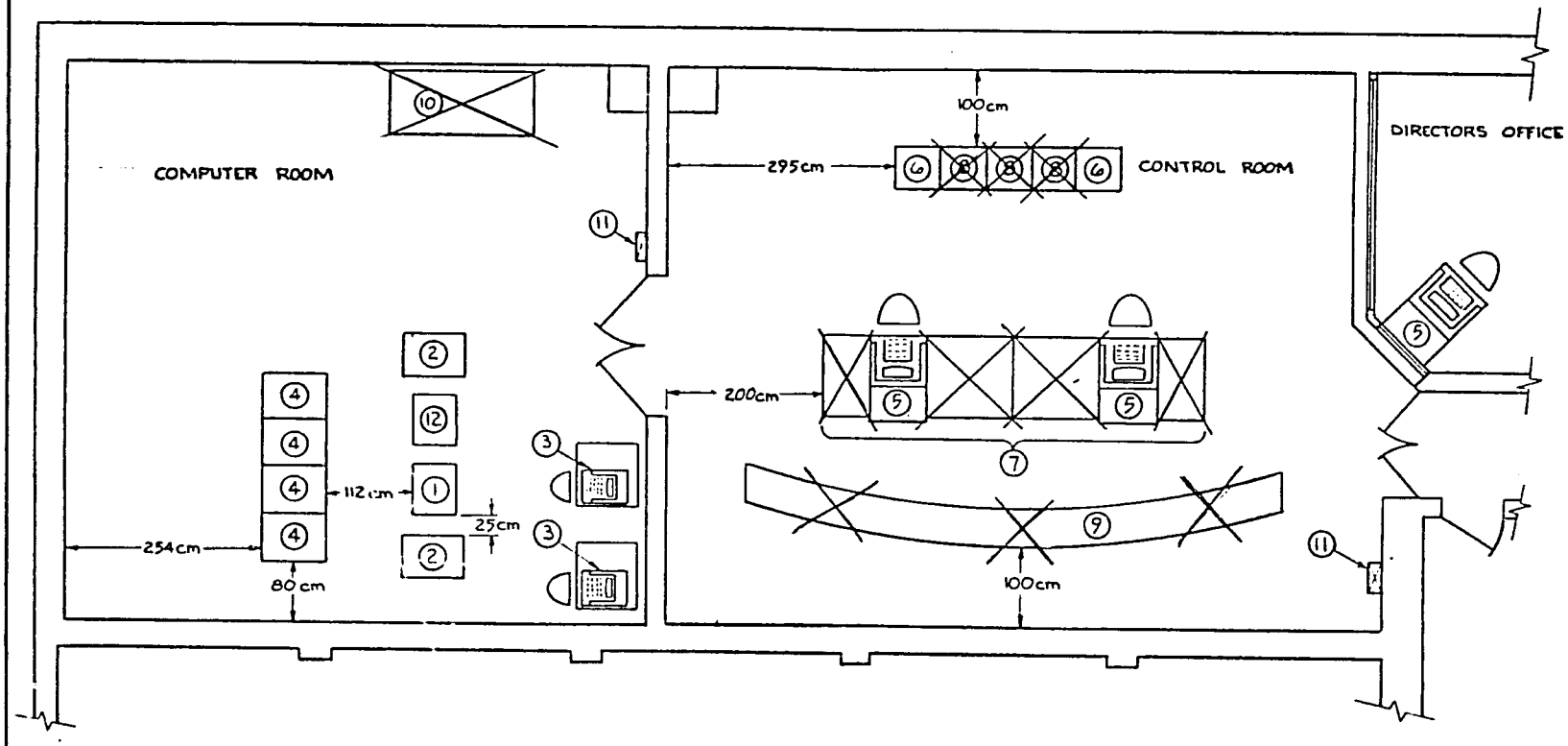

ITEM	DESCRIPTION	QTY
1.	LINE PRINTER, HP 26085	1
2.	DISK DRIVE, HP 7920	2
3.	SYSTEMS CONSOLE (PROGRAMMERS I/O), HP 2645A	2
4.	DUAL MASTER SATATION CABINETS EQUIPPED WITH HP 2111F COMPUTERS	4
5.	COLOR GRAPHIC CRT (OPERATORS I/O) HPM 3055	3
6.	LOGGER, CENTRONICS 704	2
7.	~~ACS MODULAR COLSOLE~~	1
8.	~~CABINET HOUSING FOR TREND RECORDERS~~	3
9.	~~MIMIC BOARD~~	1
10.	~~AIR CONDITIONING UNIT~~	1
11.	~~UPS DISTRIBUTION PANEL~~	2
12.	MAGNETIC TAPE DRIVE HP, 7970E	1

FIGURE 2-1

DISPATCHING CENTER
SCADA EQUIPMENT
COMPUTER & CONTROL ROOMS FLOOR PLAN

14

computer system development tool by engineers and programmers and as a backup printer for the character graphics printer.

b. Disc Drives, Model HP 7920

Disc drives are 50 megabyte, fixed platter, dual port. Two disc drives are provided with the system. The disc drives are interconnected to each CPU with each drive assigned as a primary unit to one CPU. The on-line CPU updates the data base of disc drive of the standby CPU.

c. Programmer I/O, Model HP 2645A

The Programmer I/O unit is a desk-top terminal with keyboard, black and white CRT, and an integral thermal printer. The unit will be utilized by engineers and programmers to adjust system parameters, input new programs, initiate and monitor system diagnostics, and monitor system performance. There are two Programmer I/O units with one for each CPU.

d. Central Processing Unit (CPU), Model HP 1000 series 2111F (2)

This is a mini-computer with 256Kb high speed memory expandable to 1.2MB of high speed memory. The dual units are provided with automatic failover to the standby unit upon any detection of a failure of the on-line unit.

e. Dual Master Cabinet

This unit contains the CPU, the interface cards to the system peripherals, and the communication line buffers for the RTUs.

f. Color Graphics CRT, Model HP 3055 (4)

The CRTs have 19 inch diagonal screens with multifunction keyboards. They are the operator's interface with the system, having graphics, trending, alarming, control, and altering of selected system parameters capability.

g. Character/Graphics Printer, Centronics Model 704 (2)

The printer is a free-standing device capable of printing 180 characters per second with graphics capability. The system has two printers provided: one assigned as an alarm printer which outputs each alarm that is processed by the CPU; the second assigned as a logger to output periodic systems logs, and print out operator initiated actions. The printers also perform as backups to each other.

h. Magnetic Tape Drive, Model HP 7970E

The tape drive is a 45 inch drive with a transfer rate of 1600 bits per second. It is utilized for down-loading the system software to the processor, saving/retrieving historical data, and saving routines being developed for the system.

i. Remote Terminal Unit (RTU), Models MPR 3010 and MPR 3050

These units are the interface with water system operating equipment. Each unit is complete with control and monitoring capability and communications modem. Control is via dry contact rated at 10 amps; monitoring is via contact or analog input. Thirty-seven RTUs are part of the AID-owned equipment. Card cages can be added to the RTUs to expand their input/output capabilities to match WAJ requirements. This will need to be investigated on an individual RTU basis.

3.0 WAJ WATER SYSTEM

3.1 SUMMARY OF WAJ WATER SYSTEM

The Water Authority of Jordan is responsible for potable water supply to the whole of the Hashemite Kingdom of Jordan. Elements of the water systems under its control extend approximately 450 kilometers from north to south and 150 kilometers from east to west. The major facilities and population served are located in the northwest corner of the Kingdom in Greater Amman and Irbid.

WAJ headquarters are in Amman. The water system is administered through ten regions corresponding closely to the eight governorates of the Kingdom. Table 3-1 shows total population and populaton served by WAJ in the WAJ administration regions, although population served in rural areas was not available by region. The approximate boundaries of the administrative regions and the are shown on Figure 3-1.

The regional water systems serve approximately 90 percent of the Kingdom's population.

The water systems within tne WAJ regions include all or most of the following water system components: boreholes (wells), springs, pumping stations, reservoirs, chlorination stations, and transmission and distribution pipelines with the normal ancilliary equipment.

In December 1985, the Kingdom's first public water treatment plant was brought into service. The Zai water treatment plant, with a capacity of 5,000 M^3/H, is part of the Deir Alla project which brings water from the East Ghor Canal in the Jordan River Valley through several pumping stages, treatment, and a terminal reservoir to serve Greater Amman.

TABLE 3-1
POPULATION OF KINGDOM AND POPULATION SERVED BY WAJ

	GOVERNORATE	WAJ REGION	NON-RURAL AREAS		RURAL AREAS	
			POPULATION	POPULATION SERVED	POPULATION	POPULATION SERVED
NORTH	IRBID (1)	IRBID	238,620	219,040	492,890	418,950
	MAFRAQ	MAFRAQ	41,690	33,610		
MIDDLE	AMMAN	AMMAN	1,105,000	965,900	462,510	416,260
	ZARQA	ZARQA	420,000	399,000		
	BALQA(1)	BALQA	44,510	41,960		
KARAK	KARAK(1)	KARAK/ TAFILA	56,230	49,680	112,490	101,240
SOUTH	MA'AN	MA'AN	20,760	19,440	38,710	40.750
	MA'AN	AQABA	50,000	40,000		
	TOTALS		1,976,870	1,768,630	1,108,640	975,160
	TOTALS	POPULATION OF KINGDOM				3,085,510
	TOTALS	POPULATION SERVED BY WAJ				2,743,790

(1) WAJs Jordan River Valley Region includes westerly portions of these Governorates.

FIGURE 3-1
HASHEMITE KINGDOM OF JORDAN
GOVERNORATES & WAJ REGIONS

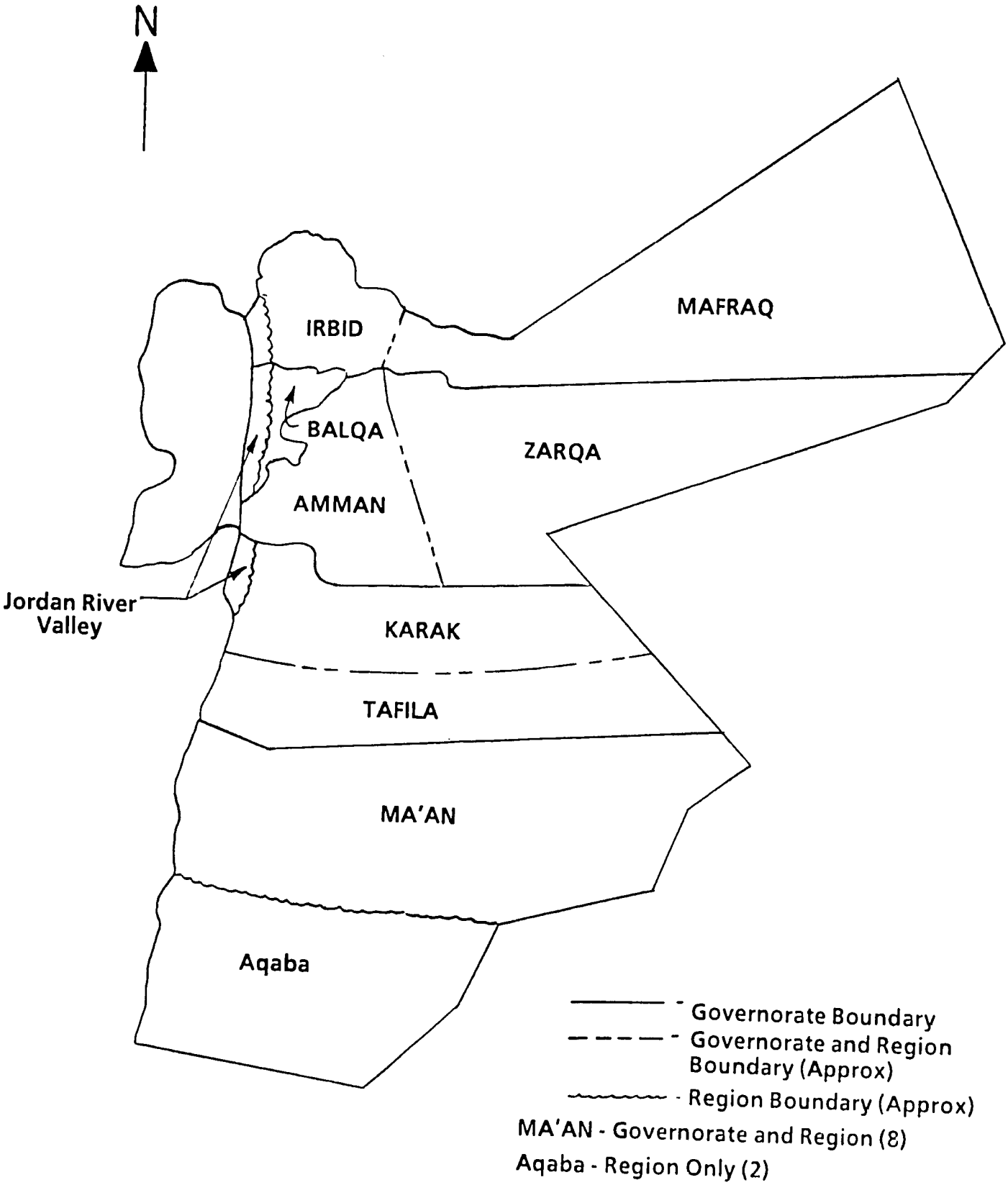

A second water treatment plant is under construction in Irbid. The plant will treat water from existing boreholes at Wadi El Arab. Plant capacity will be 2,000 M^3/H.

The size of the regional water systems vary substantially from the largest in the Amman region to the smallest in the Tafila region. All regions, however, have some or all of the water facilities that can be monitored and controlled from a central Dispatching Center. Implementation of a Dispatching System program might delay connection of small systems until larger systems with higher priorities, justified by feasibility studies are connected.

The water system of Greater Amman, due to the number of its pressure zones, multiple water sources, and pumping stages is the WAJ system that can most likely justify a Central Dispatching Center. The addition of the Deir Alla project water has added substantially to the need for controls to integrate the gravity flow from Deir Alla to the pumped supply of the boreholes and springs. The ability to reverse direction of water sources and to combine water sources at times of changes in availability from any source, requires a high level of operational control and management to provide the reliability and quality of water supply required for the large population served in the greater Amman area.

Table 3-2 lists the types of facilities in the WAJ systems that should be considered for control and montoring by a Dispatching Center. The extent to which these facilities would be covered by SCADA system will depend on their size; impact on supply and quality; benefits that can be obtained by the monitoring and control; and cost of providing the hardware, software, communications and operating system improvements to provide the monitoring and control.

Table 3-2 also lists combinations of supply-type facilities that currently make up the WAJ system. In Table 3-3, which lists numbers

TABLE 3-2

WAJ - WATER SYSTEM

FACILITIES FOR MONITOR AND CONTROL AT DISPATCHING CENTER

SUPPLY FACILITIES

BH	-	Boreholes (Well)
BPS	-	Booster Pump Station
CHL	-	Chlorination Station
ET	-	Elevated Tank
PS	-	Pump Station
RVT	-	Reservoir - Transmission (as at Swaqa)
RVD	-	Reservoir - Distribution
SRV	-	Reservoir - Service, mainly as supply to a PS or BPS
SRVD	-	Reservoir - Service also serving as direct supply to distribution system
WTP	-	Water Treatment Plant

DISTRIBUTION FACILITIES

FM	-	Flow Meter
PR	-	Pressure Recorder
PRV	-	Pressure Reducting Valve

COMBINATIONS OF FACILITIES IN WAJ SYSTEM

BH	RVD
BH/BPS/CHL	RVD/BPS/ET
BH/RVT/CHL	SRV/BPS/CHL
BH/SRV/PS	SRV/PS
BH/SRV/PS/CHL	SRV/PS/CHL
BPS	
RVD	

of facilities, the totals reflect the facilities such as PS, SRV, and CHL at a common site as separate units. However, in nearly all instances the combined facilities would use a single RTU for communicating to a Dispatching Center. Also, while in most cases BHs may be remote from their control point, as at Azraq, they will be included with the larger facility to decrease the total number of RTUs required.

The estimated number of each type of facility within the administrative regions of WAJ is summarized on Table 3-3. This table is not intended as an indication of the number of facilities that should be tied to a Dispatching Center or the number of facilities that can be handled by the AID-owned SCADA system. It is meant only to convey the relative size and complexity of the water system in each region and the potential number of facilities to be controlled.

Particular note should be made that for the distribution system facilities, the listings are estimates only. This is to provide an allowance for these facilities until specific location and numbers of each type of facility are determined from a hydraulic model analysis of the entire system in the greater Amman area. Final numbers of facilities for the distribution system can have a substantial percentage variation from the allowances given in Table 3-3.

The numbers of each type of facility in Table 3-3 are also qualified for the following reasons:

- Dry boreholes are not included
- Small reservoirs no longer in service are not included
- In a few instances, very small isolated operating systems serving under 100 persons are not included.

TABLE 3-3

SUMMARY OF WAJ WATER SYSTEM FACILITY POTENTIAL FOR SCADA

WAJ REGIONS(S)	Boreholes & Springs BH	Pump Stations PS	Booster Pump Stations BPS	Chlorination Stations CHL	Service Reservoir SRV	Distribution Reservoir RVT	Transmission Reservoir RVD	Service & Distribution Reservior SRVD	Elevated Storage Tank ET	Water Treatment Plant WTP	Distribution System Mon/Con Pt. PRV PR FM	Totals
IRBID/MAFRAQ	28	9	11	14	7	1	-	5	-	1	-	76
AMMAN/ZARQA	78	12	17	15	8	18	2	1	2	1	100*	254
BALQA	6	7	3	4	3	-	1	2	-	-	-	26
KARAK	6	4	1	3	4	4	-	-	-	-	-	22
TAFILA	-	-	-	-	-	2	-	-	-	-	-	2
MA'AN	10	3	-	3	-	3	1	3	-	-	-	23
AQABA	19	1	-	2	1	2	2	-	-	-	-	27
JORDAN RIVER VALLEY	17	-	1	7	1	16	-	-	-	-	-	42
TOTALS	164	36	33	48	24	46	6	11	2	2	100	472

*Estimated Required

Table 3-3 was prepared from discussions with WAJ personnel and from the following drawings furnished by WAJ:

- Plot Plan of Kingdom - Scale 1:200,000 Location Map of Water Authority Facilities. Prepared by WAJ

- Greater Amman Comprehensive Development Plan Scale 1:25,000 Location Map of Water Facilities in Greater Amman. Prepared by Joint Technical Team for Municipality of Amman - Dar Al Handasah, Consultants

- Pressure Zone Schematic with Reservoirs by Pressure Zone, Reservoir Capacities and Elevations. Prepared by WAJ

- Schematic of Main Facilities in Greater Amman with Reservoirs, Pumping Stations and Interconnections of Pressure Zones. Prepared by WAJ.

As shown on Table 3-1, the Greater Amman area, if considered to be the non-rural areas of Amman and Zarqa Governorates, represents approximately 50 percent of the Kingdom's population served by WAJ water systems. From Table 3-3 it can be seen that this same area has 54 percent of the water system facilities in the Kingdom that might be considered for monitoring and controlling should an extended dispatching system be determined to be feasible. In Section 5, where SCADA RTU requirements for WAJ administrative regions are summarized, the Greater Amman area is shown to require the same high proportional share of the RTUs needed if consideration is given to control and monitoring the water systems in the entire Kingdom.

The high proportion of water facilities and RTUs required to supply water to Greater Amman should not be surprising in view of the large population served, the numerous water sources, and the large number of pressure zones caused by the area's multi-mountain topography.

This high proportion of facilities in Greater Amman and the cited reasons for their existence also very pointedly shows that if there is a priority approach to providing a dispatching system for monitoring and controls where costs are most likely to be justified by benefits, it should start with Greater Amman.

3.2 SITE VISITS

To provide GCII's technical team with background on the WAJ water system, WAJ personnel briefed the team on February 2. WAJ staff and GC II's team made site visits on February 3, 4, 5, 6 and 8, 1986, to facilities in Greater Amman, the Deir Alla Project, the south to Qatranah, the north to Jerash, and the east to Azraq. Each day's trip included visits to several facilities. These visits gave the team a much better understanding of the operation of the various parts of the water system than would have been possible by looking only at drawings of the system.

4.0 STUDY METHODOLOGY

4.1 APPROACH TO DETERMINING SCADA MONITORING AND CONTROLS

Key factors in determining the technical feasibility of using the AID-owned SCADA equipment in managing the water system of the Water Authority of Jordan are: the magnitude of the special application software program needed to perform closed loop control of the water system; and the limits to the RTUs and RTU points that can be handled by the AID-owned SCADA equipment compared to the RTUs and RTU points required by the WAJ water system. In gross terms the present limits on the AID-owned system are:

- 128 RTUs
- 14,000 RTU points
- Requirements for memory and time to process closed loop control systems.

The determination of technical feasibility therefore must start with establishing the number of RTUs and RTU points required to monitor and control the WAJ water system. Inherent in this determination is policy decision concerning the types and level of facilities and degree of system monitoring and contol that is considered necessary to effect an overall improvement to the management of the water system. For this study a broad application of monitoring and control has been considered as reflecting WAJ's current position that dispatching control and monitoring should cover the entire Kingdom.

The following part of this section presents initial criteria for locating RTUs and setting RTU points based on

- The criteria used in the Figeh project, where similar facilities make the criteria applicable

- Discussions with WAJ staff related to level of monitoring and control that WAJ would prefer in an initial phase of Dispatching System operation

- Site visits to several WAJ operating water system facilities by GCII's technical team during their visit to Amman, and presentations on the background, facilities, and operations by WAJ staff during the technical team's visit.

4.2 CRITERIA FOR WATER SYSTEM MONTORING AND CONTROL

Water system facilities have many operational features that, if monitored and controlled with adequate information, can improve the efficiency, quality, economics, reliability, and safety aspects of operating the water system. In many instances closed loop operations can reduce operating personnel or minimize the chances of operator error. Computers connected to monitoring and control points in the water system have made possible the transmission, recording, and evaluation of large amounts of information in very short periods of time. This enables operators and managers to improve the water system operation in many areas not previously possible or possible only at high operating costs, particularly in labor.

Criteria are presented for locating RTUs and determining RTU points for the following water system facilities:

- pumping stations
- booster pump stations
- reservoirs
- chlorination operations
- boreholes
- major springs
- distribution systems
- flow meters

- pressure recorders
- pressure reducing/control valves.

Water treatment plants have not been included in the above listing as the only plants which currently would be affected are the Deir Alla project, which is well monitored and controlled internally, and the Wadi Al Arab plant which is under construction. However, the 246,000 cubic meter terminal treated water reservoir of the Deir Alla project will be monitored in the same manner as other reservoirs with gravity discharge to the water system. It is recommended that treatment plant influent flow, treatment flow rate and discharge rate of treated water should be monitored at the Dispatching Center.

4.2.1 RTUs

RTUs would be located at all major water system facilities such as pump stations, chlorination stations, reservoirs, and selected boreholes. Where a pumping station, chlorination station, and reservoir are part of an overall operating facility, as at Ain-Ghazal and many other sites in Greater Amman, one RTU would be used if the number of points required by the total facility does not exceed the capacity of the RTUs available from USAID or that would be purchased by WAJ to add those required for the WAJ water system.

RTUs would not be furnished at every borehole. Selected boreholes based on WAJ priorities and the size and critical nature of a borehole supply may justify RTUs at some borehole locations. Boreholes in certain areas, such as Swaqa, Qatrane, and areas with similar concentrations of boreholes, may be monitored and controlled from the pump station or reservoir to which they discharge. This type of monitoring and control would follow the approach currently in use at the Azraq Pumping Station and reservoir site. At Azrag, cable between each borehole to a central borehole and from the central borehole to the Azraq Pumping Station provide for remote

start-stop of each borehole from the pumping station. Further automation and control from the Dispatching Center for the communications system are outlined in Section 6.0.

Some boreholes, where isolated, and/or with low capacity, would continue in operation as at present. They would not have their own RTU but would be controlled from another facility with an RTU. Their flow would be included as part of aggregated flows from other boreholes discharging to the same reservoir or pumping station.

The final locations of RTUs for the distribution system would be adjacent or near to distribution system pressure recorders, flow meters, and pressure reducing/control valves. The number and final location of many of these RTUs will only be determined from the output of a distribution system hydraulic model which WAJ is planning to put out for consultant tender in the next few months.

In some cases, an RTU may handle only one distribution system measuring device, but experience has shown that in many cases two or three of these devices will be close enough to be served by one RTU.

Some pressure reducing valves are already in place in the distribution system and others will be installed in the near future. These PRVs have been added mainly as a result of continuing interconnections of the Deir Alla Project to the Greater Amman water system. Therefore, in determining the number of RTUs required for the distribution system, allowance should be made for existing measuring devices, known planned devices, plus an allowance for devices that will be identified through the hydraulic analysis of the distribution system.

4.2.2. RTU Points

Data to be acquired from remote locations is defined in the form of point counts for each RTU. In the monitoring and control of water systems, three types of points are used.

A status input (DC IN) is a point that has one or more discreet states. This type of point may be used for device status indications such as an on/off position.

Digital control outputs (DC OUT) actuate interposing relays to operate field devices such as pump motors, motor operated valves or circuit breakers.

Analog input is a point that is represented by a variable analog signal. Analog signals may be used to measure pressure, flow, or any varying measurement.

RTU points for the monitoring and control of a particular piece of equipment or measurement of a particular parameter can vary from one to more than ten. The total points required for a facility such as a pumping station are made up of the points required to monitor and control the parts that make up the pumping station. These parts include the number of pumping systems (number of separate final discharge locations of a group of pumps), number of pumps, type of pump controls, flow measurement, power sources, etc. Therefore, an initial estimate of RTU points can be made by determining the make-up of the pumps station's parts, influent and discharge condition, etc. The estimate also considers desired or necessary monitoring and controlling of the parts that are beneficial for improving operations and management of the water system. This same approach can be used for each type of water system facility.

The RTU points recommended for the types of facilities in the WAJ water system are listed in the following part of this section. A listing of the specific points by the type of facility and the facility's parts are given in Appendix B.

Pumping Stations

- Each pumping system (group of pumps discharging to a common location) - 6 points.

- Each pump - 6 points

- Each Motor Operated Valve on Pump Discharge - 8 points

- Each separate power source - 6 points plus 1 point for each transformer

- Each flow control transfer or diversion valve in the internal pumping station piping or exterior yard piping (see following paragraph) - 8 points

- Each emergency generator facility (where applicable) -4 points.

The above point count provides for one flow meter measurement on each pumping system discharge. If pumping station influent piping has more than one source or influent flow can be diverted to other pumping stations, the distribution system, reservoirs, etc., each separate flow shall be measured and each valve providing separation or diversion of flow shall be monitored and controlled. In these cases the following points should be added:

- Each flow meter - 1 point
- Each control valve - 8 points.

Reservoirs

- Each power supply if reservoir is not near to and part of a pumping station operation - 1 point

- Each reservoir water level indicator - 1 point

- Each pumping system discharging to the reservoir (does not apply to boreholes unless specifically established by borehole capacity) - 8 points

- Each influent flow line flow meter - 1 point

- Each influent line control valve - 8 points.

As described under pumping stations, where flow from reservoirs is split at the reservoir for discharge to more than one pumping station and/or direct discharge to the distribution system, each discharge should have a separate flow meter and motor operated control valve. Interconnecting piping on influent and discharge piping to divert flows from one line to another should also have motor operated control valves. For reservoirs that do not discharge to a nearby pumping station and that have long discharge lines, monitoring of abnormal flows that could occur due to a pipeline break should be monitored. For these monitoring and control conditions, add:

- Each flow meter - 1 point
- Each control valve - 8 points
- Each abnormal flow indication - 1 point.

Chlorination Stations

Chlorination stations are in most cases associated with either a pumping station, a large reservoir or both of these. The RTU points for the chlorination station can be added to the other facility's RTU

- Each chlorination room (assume room is separately enclosed and has own entrance) - 3 points

- Each chlorinator - 7 points

- Each scale - 1 point.

Boreholes

- Each borehole - 5 points.

Boreholes with booster pumps and/or chlorination facilities will have additional points depending on the number of booster pumps, conditions of discharge to system and type of chlorination.

Booster Pump Stations

Booster pump stations have the same components as pumping stations and therefore the same approach to assigning RTU points.

Springs

- Each spring - 1 point.

Springs already have electrodes for low water level cutoff of pumps.

Distribution System

- Each system pressure reducing valve installation - 23 points.

This assumes a standardization of WAJ's present approach to use parallel PRVs with two pressure recorders and one flow meter where PRVs required.

- Each system pressure recorder - 1 point

- Each system flow meter - 1 point.

Water Treatment Plants

- Each plant - 3 points.

Since the two water plants have their own internal monitoring and controls, it is felt that at this time the Dispatching Center should only receive pumped flow rates reaching the plants, flow rate of treatment through the plant and pumped flow rates from the plant.

SECTION 5.0 WAJ SCADA REQUIREMENTS

5.1 ESTIMATES OF RTU'S AND RTU POINTS

After discussions concerning the scope of the water system that WAJ wished to have considered for monitoring and control through a Central Dispatching Center, estimates were prepared on the number of RTUs and RTU points that will be required to provide the data input and output necessary for the desired scope.

Using the approach described in Section 4, Study Methodology, the large majority of the water systems components in the Kingdom were evaluated as to number of RTUs and RTU points that would provide a level of monitoring and control similar to that planned for the Damascus water system.

This evaluation did not consider the benefit/cost implications of including each of the water system components in a Central Dispatching Center project. It addressed how each component might be monitored and/or controlled if connected to a Central Dispatching Center. As noted in Section 3, certain very small systems and small distribution reservoirs no longer in service were not included in determining the estimated number of facilities in each region. These facilities were also not considered for RTUs or RTU points in the estimate of the total Kingdom requirements. A more detailed feasibility or conceptual design study would likely reduce the RTUs required based on benefits to be derived versus cost to add monitoring and control to each segment of the water system. Conceptual and final design will also likely vary the number of RTU points required for specific facilities as a more thorough evaluation is established.

In arriving at the total RTUs and RTU points for Greater Amman, a significant number of RTUs had to be estimated to allow for monitoring and control points in the distribution system. These

RTUs would provide data from pressure reducing and control valves, pressure recorders, and flow meters. Several pressure reducing valve installations are already in place and many more are planned as a result of the Deir Alla Project supply reversing flow directions to the distribution system and supplying water by gravity from the highest pressure zone. However, many additional valves, recorders, and flow meters are likely to be installed at critical distribution system locations. These locations will finally be identified by a hydraulic model network analysis that is currently being prepared by WAJ and the World Bank for consultant tenders. If this project is tendered in mid-1986, information on locations of additional points where RTUs will be required is not likely to be available until the third or fourth quarter of 1987.

However, to allow for the outcome of a hydraulic analysis, a provision for 50 RTUs for the distribution system has been made for Greater Amman. It was also assumed that the 50 RTUs would serve a mix of 50 pressure reducing valve installations, 25 pressure recorders, and 25 flow meters with an average of two units per RTU.

To calculate the estimated RTU points at each facility assigned an RTU, the GCII team and staff from WAJ reviewed schematics of connections and interconnections at each site, numbers and types of equipment associated with the facility, and a basic approach to how the equipment and the facility should be monitored and controlled. A point count by major components of each group of facilities was then prepared based on the points shown for each facility in Appendix B. Points were added for equipment or operations that were not currently in place but were felt necessary for proper monitoring and control. In a few cases, special conditions required consideration of adding or deducting a minor number of RTU points from the standard points determined by application of the points shown in Appendix B.

Work sheets were prepared for each major facility type to record the types of equipment and operations to be monitored or controlled. In most cases groupings of facilities were possible and RTU points were combined on a single RTU. Samples of the work sheets used for each facility are found in Appendix C. Copies of work sheets for the entire Kingdom have been provided to WAJ.

Summary sheets of RTU's and RTU points required for the WAJ Regions were prepared from the individual work sheets of each facility or groups of facilities at the same site. The summary sheets combine Irbid-Mafraq Regions and Amman-Zarqa Regions. The summary sheets are Tables 5-1-1 through 5-1-8. They use the designations of facilities shown on Tables 3-2 and 3-3 to identify the groups of facilities located at the same site which are covered by the RTU and RTU points considered for that site. Tables 5-1-1 through 5-1-8 also identify the number of each of the three types of points required for the RTU. RTUs should be selected and designed internally not only for total points but also for point types. RTUs have been subdivided into large and small units based on the total number of each type point and the total points.

5.2 SUMMARY OF TOTAL RTU AND RTU POINTS REQUIRED

Table 5-2 summarizes the RTUs and RTU points by the WAJ regions. With the allowance for distribution system RTUs, Greater Amman requires 60 percent of the estimated RTUs and 55 percent of the estimated RTU points needed for the entire Kingdom.

5.3 APPLICATION OF AID OWNED SCADA EQUIPMENT

The AID-owned SCADA equipment could be used for Greater Amman since the RTUs and the RTU point capability of the CPUs is above the RTU and RTU point requirements of Greater Amman where Greater Amman is considered the Amman and Zarqa Regions and Governorates. There does remain, however, the uncertainty of whether the allowance of distribution system RTUs will prove adequate.

TABLE 5-1-1
RTU - RTU POINT COUNT ESTIMATE
REGION - IRBID AND MAFRAQ
GOVERNORATE - IRBID AND MAFRAQ

RTU NO.	LOCATION	POINT COUNT				FACILITIES INCLUDED	RTU SIZE
		DC IN	DC OUT	ANALOG	TOTAL		
1	Ez-Zaatary PS	136	38	18	192	SRVD/PS/CHL	L
2	Sumayya PS	97	31	9	137	SRVD/PS/CHL	L
3	Um-El-Lulu	74	17	10	101	SRV/BPS	L
4	El-Aquip Wells	22	13	1	36	SRV/PS	S
5	Km 111	36	15	4	55	BPS	S
6	Km 134	41	6	6	53	BPS	S
7	Dhuleil	86	26	7	119	BH/SRV/PS/CHL	L
8	Deir El Kahf BPS	42	7	8	57	SRV/BPS/CHL	S
9	Sabha Well	46	11	6	63	SRVD/BPS/CHL	S
10	Ed-Dajaniya	22	5	3	30	BPS	S
11	Hufa	82	16	11	109	SRVD/BPS/CHL	L
12	Sabda	67	14	7	88	SRVD/BRS/CHL	L
13	Hakama BPS	19	5	3	27	BPS	S
14	Samad BPS	49	10	7	66	SRV/BPS	S
15	Ras Munif RVD	18	3	3	24	RVD	S
16	Ain El Tannour	39	10	4	53	SRV/PS	S
17	Qairrawan Spring	53	14	4	71	PS	S
18	Shawahed	90	27	10	127	BH/SRVD/PS/CHL	L
19	Ain El Hamman	63	17	6	86	BH/SRVD/PS/CHL	L
20	Suweillha Well	52	10	6	68	BH/RVD/BPS/CHL	S
21	Ain El Deek Spring	41	10	4	55	PS/CHL	S
22	Sakib Spring	61	15	7	83	PS/CHL	L
23	Wadi Al Arab WTP	-	-	3	3	WTP	S
	TOTALS	1,236	320	147	1,703		14 Small 9 Large

RTU's 1 to 10 - Mafraq Region
RTU's 11 to 23 - Irbid Region

TABLE 5-1-2 (1)

RTU - RTU POINT COUNT ESTIMATE

REGION - AMMAN AND ZARQA

GOVERNORATE - AMMAN AND ZARQA

RTU NO.	LOCATION	POINT COUNT				FACILITIES INCLUDED	RTU SIZE
		DC IN	DC OUT	ANALOG	TOTAL		
1	Qatraneh	50	12	10	72	BH/SRV/PS	S*
2	Swaqa	61	31	8	101	BH/RVT/CHL	L*
3	Azraq	107	45	9	161	PS/CHL	L
4	Zarqa	57	18	6	81	SRV/PS/CHL	S*
5	Yajuz	62	24	11	97	SRV/PS/CHL	L*
6	Yajuz BPS	60	15	10	85	SRVD/BPS	L
7	Ruseifa BH	43	15	9	67	BH	S
8	Hashimiya	48	12	5	65	RVD	S
9	Wadi El Seer	77	26	12	115	SRV/PS/CHL	L*
10	Qastal	171	65	21	257	BH/SRV/PS/CHL	L*
11	Shmeisani	84	26	15	125	SRVD/PS	L*
12	Tadj	154	51	31	236	BH/SRV/PS/CHL	L
13	Ain Ghazal	199	58	24	281	SRV/PS/CHL	L*
14	Ras El Ain	169	36	36	241	SRV/PS/CHL	L
15	Khaw	85	26	9	120	SRV/BPS	L*
16	Deir Alla RVT	27	6	7	40	RVT	S*
17	R2 (Amra Hotel)	63	13	8	84	RVD/BPS/ET	L
18	R4	17	3	5	25	RVD/BPS	S*
19	R7 (Marka)	34	6	11	51	RVD/BPS/ET	S*
20	R13	36	9	9	54	RVD	S*
21	R14	55	9	12	76	BPS/RVD	S
22	R16	18	3	3	24	RVD	S*
23	R17	49	10	6	65	BPS/RVD	S*
24	R18	27	6	6	39	RVD	S*
25	R19	27	6	6	39	RVD	S*
26	Khilda	36	9	8	53	RVD	S*
27	El Qweisima	27	6	7	40	RVD	S*
28	El-Waha	35	9	8	52	BPS	S*
29	5th Circle	19	5	5	29	BPS	S*
30	El Hadadeh	34	14	7	55	BPS	S*
31	El Homranieh	19	5	4	28	BPS	S*
32	Um-El-Heran	57	15	15	87	BPS	L
33	Sahab	34	3	7	44	BPS/RVD	S*

TABLE 5-1-2 (2)
RTU - RTU POINT COUNT ESTIMATE
REGION - AMMAN AND ZARQA
GOVERNORATE - AMMAN AND ZARQA

RTU NO.	LOCATION	POINT COUNT				FACILITIES INCLUDED	RTU SIZE
		DC IN	DC OUT	ANALOG	TOTAL		
34	Faisaliya	19	5	4	28	BPS	S*
35	Um-El-Bassatin	37	11	7	55	BPS	S*
36	Madaba	68	17	12	97	SRVD/BPS/CHL	L
37	Bani-Hamideh	40	7	4	1	BPS/RVD	S*
38	Ruseifa	65	26	5	96	BH/RVD/PS	L*
39	BH33 - Racing Club	101	41	11	153	BH/BPS	L*
40	El Muhajareen	50	12	5	67	BH/SRV/BPS	S*
41	Ras El Ain	36	10	4	50	BH	S*
42	M4	17	8	4	29	BH/CHL	S*
43	Musherfeh	18	3	3	24	RVD	S*
44	Shaheed	18	3	3	24	RVD	S*
45	Batrawy	18	3	5	26	RVD	S
46	Awajon 21 & 22	45	16	8	69	BH	S*
47	El Jabal-El Abyad	18	3	3	24	RVD	S
48	Dabuk	32	7	3	42	BPS/RVD	S*
49	Abu Nusseir	18	3	3	24	RVD	S
50	1000 Reservoir	18	3	3	24	RVD	S
51	Suweilleh	18	3	3	24	RVD	S
52	Deir Alla WTP	-	-	3	3		S
	SubTotals	2,667	779	443	3,889		
53 to 102	Various locations in Distribution System	600	300	300	1200	50 - PRV, 25-PR, 25-FM	50 S
	TOTALS	3,267	1,079	743	5,099		86 Small 16 Large

RTU's 1 & 2 - Karak Region
RTU's 3 to 8 - Zarqa Region
RTU's 9 to 102 in Amman Region

* Potential Use of AID-Owned RTU's

TABLE 5-1-3

RTU - RTU POINT COUNT ESTIMATE

REGION - BALQA

GOVERNORATE - BALQA

RTU NO.	LOCATION	POINT COUNT				FACILITIES INCLUDED	RTU SIZE
		DC IN	DC OUT	ANALOG	TOTAL		
1	Ashrieah	51	12	6	69	BH/SRV/PS/CHL	S
2	WI	43	9	4	56	BH/RVT/PS	S
3	Ain Hazeer Spring	48	13	6	67	PS/CHL	S
4	Baqurieh Spring	35	7	4	46	SRV/PS	S
5	Salt-Main PS	114	25	13	152	PS/BSP/BPS/CHL	L
6	Yazidiya	47	11	4	62	BH/SRVD/PS	S
7	Um Attieh Well	32	9	4	45	BH	S
8	Ain El Azraq	47	12	5	64	SRV/PS/CHL	S
9	Fuheis BPS	59	12	9	80	SRVD/BPS	L
		476	110	55	641		7 Small 2 Large

TABLE 5-1-4
RTU - RTU POINT COUNT ESTIMATE

REGION - KARAK
GOVERNORATE - KARAK

RTU NO.	LOCATION	POINT COUNT				FACILITIES INCLUDED	RTU SIZE
		DC IN	DC OUT	ANALOG	TOTAL		
1	Sultan	59	18	5	82	PS/BPS/SVR/CHL	L
2	Ghuweir	95	29	10	134	BH/SRV/PS/CHL	L
3	Ain-Sara	45	12	7	64	SRV/PS/CHL	S
4	Aiń-Sara BPS	47	9	4	60	SRV/BPS	S
5	Thallaseh	18	3	3	24	RVD	S
6	Muta	59	12	7	78	PS/RVD	L
7	Abu Hammur	17	3	3	23	RVD	S
8	El-Mar	18	3	3	24	RVD	S
		358	89	42	489		5 Small 3 Large

TABLE 5-1-5

RTU - RTU POINT COUNT ESTIMATE

REGION - TAFILA

GOVERNORATE - TAFILA

RTU NO.	LOCATION	POINT COUNT				FACILITIES INCLUDED	RTU SIZE
		DC IN	DC OUT	ANALOG	TOTAL		
1	Tafila - 3 Reservior	3		6	9	RVD	S
2	Atatah	18	3	3	24	RVD	S
	TOTALS	21	3	9	33		2 Small

TABLE 5-1-6

RTU - RTU POINT COUNT ESTIMATE

REGION - MA'AN

GOVERNORATE - MA'AN

RTU NO.	LOCATION	POINT COUNT				FACILITIES INCLUDED	RTU SIZE
		DC IN	DC OUT	ANALOG	TOTAL		
1	Tahona Wells	25	10	4	39	BH/RVT	S
2	Ma'an RVD	19	6	6	31	RVD	S
3	Nijil PS	80	21	8	109	BH/SRVD/PS/CHL	L
4	El Qa'	84	25	8	117	BH/SRVD/PS/CHL	L
5	Mureighe	54	14	6	74	BH/SRVD/PS/CHL	S
	TOTALS	262	76	32	370		3 Small 2 Large

TABLE 5-1-7

RTU - RTU POINT COUNT ESTIMATE

REGION - AQABA

GOVERNORATE - MA'AN

RTU NO.	LOCATION	POINT COUNT				FACILITIES INCLUDED	RTU SIZE
		DC IN	DC OUT	ANALOG	TOTAL		
1	Qa Ed Desi W5	31	19	2	52	BH	S
2	Qa' Ed Desi RVT	33	9	3	45	BH/RVT	S
3	Wadi El Yutum	59	24	9	92	RVT/BH/CHL	L
4	Fertilizers RVD	19	6	6	31	RVD	S
5	El Quweira	64	14	6	84	BH/SRVD/PS/ CHL/RVD	L
6	Aquaba Low RVD	28	9	6	43	RVD/RVD	S
	TOTALS	234	81	32	347		4 Small 2 Large

TABLE 5-1-8

RTU - RTU POINT COUNT ESTIMATE

REGION - JORDAN RIVER VALLEY

GOVERNORATE - IRBID, BALQA, & KARAK

RTU NO.	LOCATION	POINT COUNT				FACILITIES INCLUDED	RTU SIZE
		DC IN	DC OUT	ANALOG	TOTAL		
1	Wadi Rajib	32	10	4	46	BH/RVD	S
2	Abu Zighan	51	14	8	73	BH/RVD/RVD	S
3	Mukibeh Al Foqa	18	3	3	24	RVD	S
4	Mukibeh Al Tahta	39	11	7	57	BH/RVD	S
5	Wadi Jariah	28	8	4	40	BH/RVD/CHL	S
6	Sulikhat Spring	28	8	4	40	BH/RVD/CHL	S
7	Sulikhat Well	28	8	4	40	BH/RVD/CHL	S
8	Wadi Al Arab Spring	3	2	-	5	BH	S
9	North Shuneh	25	6	4	35	RVD/CHL	S
10	Wadi Al Arab Well No. 5	28	8	4	40	RVD/BH/CHL	S
11	Krimeh Well	24	7	3	34	BH/RVD	S
12	?	51	5	6	62	BPS/SRV/RVD	S
13	Sakneh	21	5	3	29	BH/RVD	S
14	Al Rauda Well	18	3	3	24	BH/RVD	S
15	Ghor Al Safi	31	10	4	45	BH/RVD/CHL	S
16	Ghor Al Mazraah	28	8	4	40	BH/RVD/CHL	S
	TOTALS	453	116	65	634		16 Small

RTU's 1 & 2 - Balqa Region
RTU's 3 to 14 - Irbid Region
RTU's 15 & 16 Karak Region

TABLE 5-2
RTU - RTU POINT COUNT ESTIMATE

ALL WAJ REGIONS

WAJ REGIONS(S)	POINT TYPES				RTU'S		
	DC IN	DC OUT	ANALOG	TOTAL	SMALL	LARGE	TOTAL
IRBID/MAFRAQ	1236	320	147	1703	14	9	23
AMMAN/AZRQA	2367	1079	743	5089	86(1)(2)	16(2)	102(3)
BALQA	476	110	55	641	7	2	9
KARAK	358	89	42	489	5	3	8
TAFILA	21	3	9	33	2	-	2
MA'AN	262	76	32	370	3	2	5
AQABA	234	81	32	347	4	2	6
JORDAN RIVER VALLEY	453	116	65	634	16	-	16
TOTALS	6307	1874	1125	9306	137	34	171

(1)Twenty-eight AID owned RTU'S could be modified to fit a WAJ RTU location.
(2)Nine AID owned RTU'S could be modified to fit a WAJ RTU location.
(3)Includes an allowance of fifty RTU'S for known and anticipated distribution system requirements.

The RTU capacity of the CPUs might be expanded but the desirability of modifying the CPUs which are already six years old and no longer manufactured, is not a desirable start for a project of this type.

Assuming the RTU estimate for Greater Amman is essentially correct, there is limited expansion available in the CPUs for new facilities in Greater Amman or for extending the SCADA system into other regions.

The AID-owned SCADA CPUs in their current configuration cannot handle the water systems of the entire Kingdom. Internal modifications may be possible but would be costly and would provide a non-standard CPU. As will be shown in Section 8, the CPUs would probably be eight to nine years old before being put into full service.

The AID-owned RTUs have the ability to be modified to fit specific RTU conditions and requirements for Greater Amman. All but one RTU would need modification to fit the estimated points required by a Greater Amman facility. The possible match of AID owned RTUs to RTUs for Greater Amman is shown in Table 5-1-2.

When AID purchased the SCADA equipment, they also paid for certain programs related to the operation of the CPU. The extent to which AID has ownership of these programs is not well defined. These programs could become part of the cost to WAJ should it be determined in WAJ's interest to obtain the AID owned SCADA equipment.

The remaining AID owned SCADA equipment such as loggers, CRTs, printers etc. could be used in Jordan. While they too would be about eight years old before being put in use, the improvements in this type of equipment is not as pronounced as the improvements that have been made in CPUs in the same period.

From the foregoing paragraphs, it can be seen that under certain conditions, the AID-owned SCADA equipment could be used in Jordan particularly if restricted to Greater Amman. GC II's recommendation on whether the equipment should be used is given in Section 8 of this report.

6.0 COMMUNICATIONS CONCEPTS

The communications system is a major component of an operating dispatching system, providing the means for effective and rapid status and control signals to be transmitted between the water system components and the dispatch system main control center.

A major portion of the communication network should be dedicated telephone lines. This requirement is based on a review of the WAJ facilities and their location, from conversations with WAJ staff, observing the topography, and other factors affecting the selection of the means of communication. WAJ staff members have indicated that the telephone lines in the Greater Amman area are conditioned to 9600 bits-per-second and those lines in the other governorates are conditioned to 2400 bits-per-second. The communications modems in the AID-owned computer system and RTUs are four-wire devices with a transmission rate of 1200 bits-per-second. Therefore, the telephone system is suitable for use as part of the communications system.

Alternatives and combinations of communications medium that will be considered for the system would be line-of-sight radio, data concentrators, common telephone pairs for multiple RTUs signal convertor modulators, and low frequency transmission. The combinations and alternative for the communication system are illustrated in Figure 6-1.

The data concentrator would be applicable at regions such as Aqaba and Ma'an where there are several RTUs with a few points each. The data concentrators would collect and send commands as required by the control center between the control center and RTUs. The communication between the control center and concentrator would be by two conductors or on a wide-band radio channel. Separate communication channels would then be provided from the concentrator to the RTUs. The concentrator would have two advantages for this application. One, it can reduce the number of RTU addresses of the CPU. Two, data can be multiplexed and sent to the CPU in concentrated form.

Another alternative would be to transmit data to multiple RTUs over common telephone lines for a portion of the route. Then, at a distance from the control center, at a telephone exchange, dedicated telephone lines could be selected for each RTU. The common telephone line approach would decrease the number of lines and telephone authority leasing charges.

Dial-up modems are an option that may be considered in the communication system for selected sites. The dial-up modem would be applicable at sites where limited transfer of data would be necessary, such as at boreholes where stop/start operations were to be performed on occasion and no additional data transfer would be required. With a dial-up modem, the telephone line would only be engaged with the control center when sending a command or receiving confirmation of the operation.

In selected locations in the Kingdom, it may be advantageous to communicate from a reservoir by a radio communication channel. The RTU would be located at the borehole or reservoir. The radio communication channel would be between there and another station, where a telephone line would be secured for the remainder of the distance to the control center, or would communicate directly to the control center. The hilly terrain in the vicinity of Amman is not conducive to radio transmission as a primary means of communication for the dispatching system.

At facilities where a reservoir level is needed for the dispatching system a transducer for level frequency transmission would be installed along with an analog to frequency modulation converter. The frequency modulated signal would be transmitted over a pair of wires to an RTU location where the signal would be converted to an analog signal input to the RTU.

A survey will be needed throughout the region in which a SCADA system is to monitor and control the water system to optimize the economic and reliability features of the communications system.

FIGURE 6-1
COMMUNICATIONS SYSTEM
COMBINATIONS & ALTERNATIVE APPROACHES

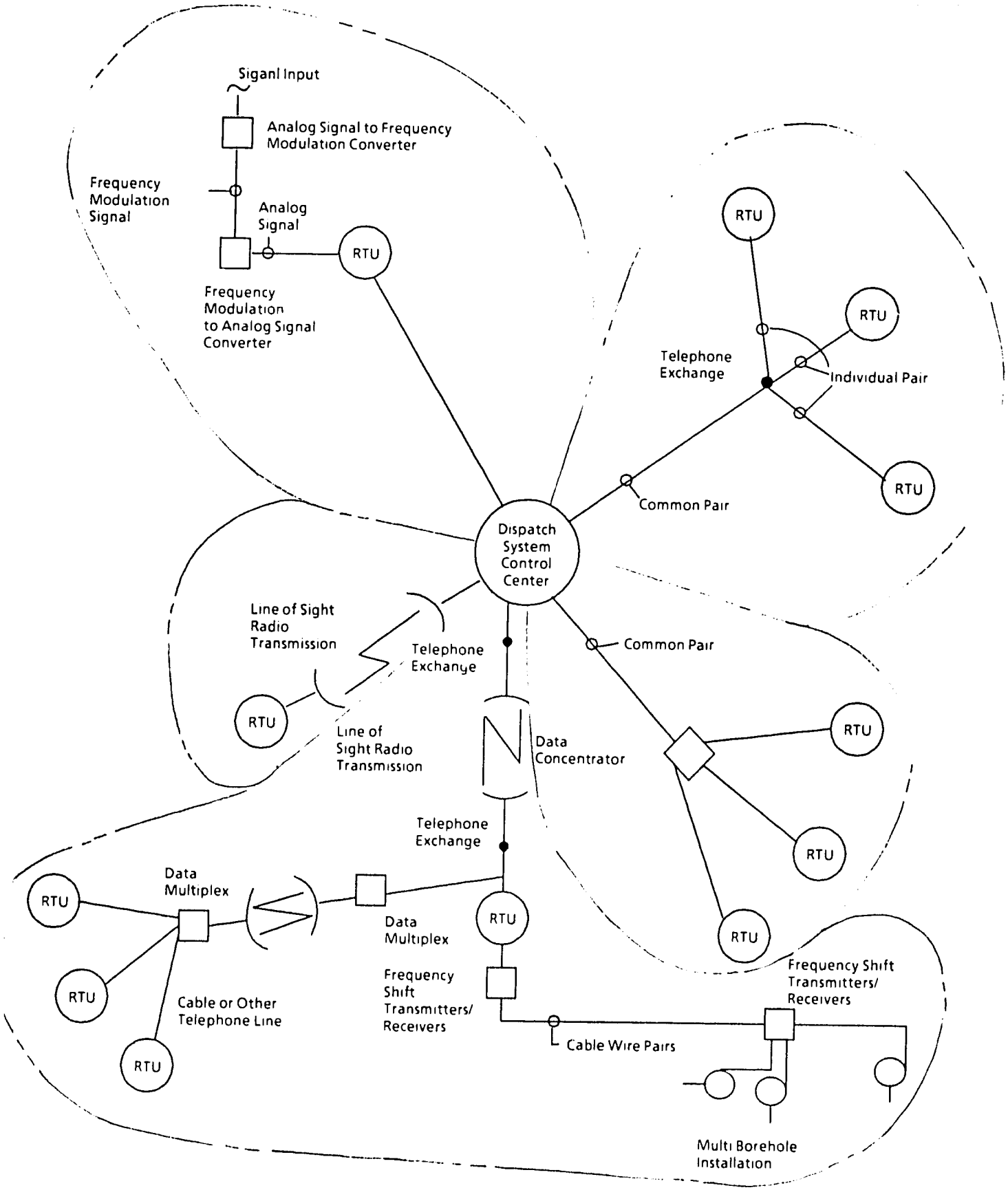

SECTION 7.0 SCADA SYSTEM COST ESTIMATE

7.1 INTRODUCTION

As noted in Section 1.2, a SCADA system represents only one of three major cost components of an operating Dispatching System where the Dispatching System covers the entire works required to provide the monitoring and control of a large number of physical or process operations often spread over a substantial geographic area. The other major components of a Dispatching System are:

- A communications system between the dispatching center and the remote sites where operations are to be monitored and controlled.

- The operating primary devices and facilities which are to be monitored and controlled and in particular the features which permit them to send data and receive and respond to remote directions and controls.

In relative terms, the communications system and the additions and upgrading of the operating facilities will each usually be less costly than the SCADA system.

To provide a functioning SCADA system, a substantial amount of ancillary equipment, software, and services are required in addition to the SCADA hardware. Table 7-1 shows the line items of cost required for the Figeh SCADA system and notes the items that GCII understands to be part of the AID-owned equipment. These same items of equipment and services would also likely be costs in a WAJ SCADA system, although the contract packages could be arranged differently.

TABLE 7-1

EXAMPLE SCADA CONTRACT PACKAGE (1)

		% $ COST	% LOCAL COST	AID OWNED EQUIPMENT
1.	Central Processing Unit	10.2	-	X
2.	Main Memory	In 1	-	X
3.	Bulk Memory	4.7	-	X
4.	Peripherals	2.9	-	X
5.	CRT Display System	5.8	-	X
6.	Loggers	0.7	-	X
7.	Hard Copy Device	In 6	-	X
8.	Strip Chart Recorders	1.1	-	X
9.	Mimic Board	2.7	-	
10.	Master Station	2.7	-	X
11.	Remote Terminal Units	14.9	-	X
12.	RTU Test Equipment	0.5	-	
13.	Software	13.2	-	Partial
14.	Documentation	1.7	-	
15.	Spare Parts & Test Equipment	4.3	-	
16.	Five Year Expendables	0.9	-	
17.	Computer and Control Room A.C.	0.4	-	
18.	Uninterruptable Power Supply	1.0	-	
19.	Fire Protection Equipment	0.4	-	
20.	Engineering Services	8.7	-	
21.	Training in USA	4.4	-	
22.	Transportation and Insurance	3.3	7.1	
23.	Installation and Field Acceptance	4.9	49.0	
24.	Availability Acceptance Test	1.9	19.1	
25.	Operational Assistance	2.9	12.3	
26.	Guarantee Period Assistance	2.9	12.3	
27.	Management Missions to Site	1.9	0.2	
		100.0	100.0	

(1) Building to receive equipment not included; RTU connections to communication system and primary devices by others; overheads, risks profit and other markups spread through all items.

7.2 SCADA SYSTEM

GCII has used the cost items included in the Figeh SCADA system contract to develop a prefeasibility level cost estimate for SCADA systems for Jordan and for Greater Amman. Adjustments to the Figeh pricing have been made for current costs of CPUs, the higher number of RTUs required, and the more extensive water operations software required due to the more complicated operations of the WAJ systems. All items covered by Table 7-1 have been considered as required for a WAJ SCADA system.

The SCADA system cost estimate has been made assuming that WAJ will proceed without the AID-owned equipment followed by the estimated reduction in cost for the equipment that could be replaced by the AID-owned equipment.

Cost of the SCADA system using AID-owned equipment has been calculated using assumed prices for the AID-owned equipment as zero dollars and $1,500,000.

The cost estimates for the alternatives are shown on Table 7-2.

Table 7-2 shows that if the AID-owned equipment were to be used by WAJ, its maximum price should be less than $1,350,000 for any cost savings to accrue to WAJ. However, in view of the capability of current CPUs and other equipment, the price advantage of using the AID-owned equipment even if furnished at no cost to WAJ, may be offset by other factors as discussed in Section 8.0.

Of particular note in this cost estimate is the present availability of micro-computers at one-quarter to one-third the cost of the Figeh CPUs but with double the RTU capacity and memory and with faster instruction cycle time.

TABLE 7-2

COST ESTIMATES OF SCADA SYSTEMS FOR WAJ(1)

	GREATER AMMAN	KINGDOM
All New System	$ 6,946,000	$ 8,910,000
	JD 313,000	JD 368,000
With AID-Owned Equipment	$ 7,090,000	$ 9,245,000
(AID Price - $1,500,000)	JD 313,000	JD 368,000
With AID-Owned Equipment	$ 5,590,000	$ 7,745,000
(AID Price - Nil)	JD 313,000	JD 368,000

(1) Costs do not include Engineering Services of WAJ and Consultant.

Table 7-3 is a summary comparison of the SCADA system costs for the Figeh Damascus project and as estimated for Greater Amman. The Comparison is given to indicate the reasonableness of the Greater Amman SCADA system estimate. While CPU costs have decreased other costs have had some increases. The WAJ system also requires many more RTUs and a much more costly development for water system operation software than was required by the Figeh system.

7.3 COMMUNICATION SYSTEM

Section 6.0 describes several conceptual alternatives to the development of a communication system that would tie together a SCADA System and the WAJ water system operations. It is not in the scope of this study to estimate the cost of the communication system.

The cost of the communication system can be estimated in a feasibility study or conceptual design of a total Dispatching System project. At that time it will be necessary to evaluate and optimize the possible alternative communication methods available.

It can be anticipated for broad budget considerations and depending on the approach to contract packaging that the communications system cost will be in the order of one-third to two-thirds the cost of the SCADA system cost.

7.4 WATER SYSTEM

The final elements of an operating dispatching system are the operating water system facilities that are to be monitored and/or controlled at the dispatching center. The types and number of these facilities are described in Sections 3 and 5.

For the large majority of WAJ facilities, it will be necessary to add equipment or to ugrade existing equipment in order to provide

TABLE 7-3

COMPARISON OF SCADA SYSTEM COSTS

OWNER	FIGEH	WAJ
Cost Basis	Firm Bid - November 1981	Prefeasibility Cost Estimate - March 1986
Cost(1)	$ 4,745,000 LS 2,398,000	$ 6,946,000 JD 313,000
Area Served	Damascus	Greater Amman
RTU's	37	101
RTU Points	1584	5095
Complete Dispatching System (US$ Equivalent)	$ 12,400,000	$ 19,300,000

(1) Costs do not include costs for communication system or for operating system additions and upgrading.

the desired monitoring and control of the facility. The number of facilities in the Kingdom that could be monitored and controlled approach 500, with approximately half being in the Amman/Zarqa Regions. With individual equipment items, such as pumps, needing several additions or upgradings, the total number of additions or upgradings required will be several times the number of facilities listed in Table 3-3.

For example, a pump station having 13 pumps with four pumping systems could require the addition of 13 motor operated valves with new status contacts and remote local control switches, four new pressure recorders. The pump station could require flow meters and control valves all of a type with provisions to send or receive data from the facilities RTU.

The cost of each specific addition or upgrading to the water systems facilities will vary in the range of $100 to $10,000. The lower cost will cover additions to motor switches and the higher cost will cover items such as WAJ's standard pressure reducing valve installation.

When the scope of the water system to be covered by a dispatching system is determined, a detailed bill of quantities should be prepared to estimate the cost of additions and upgrading the water system facilities. A preliminary indication of the number of items required can be developed by WAJ from the RTU Point Count work sheets.

The total cost of water system additions and upgradings for budget purposes should be considered as 20 to 50 percent of the SCADA system costs.

7.5 DISPATCHING SYSTEM

In terms of broad budget considerations, a complete dispatching system for Greater Amman is likely to cost $14,000,000 and JD 1,840,000. A dispatching system for the Kingdom is likely to cost $17,800,000 and JD 2,165,000.

These total costs are given to indicate the order of magnitude of costs that WAJ must consider if they proceed with a dispatching system. They also indicate that a SCADA system, and more importantly the AID-owned SCADA equipment, is but a small part of the total system and total cost required to have an operating dispatching system.

SECTION 8.0 RECOMMENDATIONS

8.1 APPROACH

In its evaluation of the AID-owned SCADA system (equipment) for use in Jordan, GCII developed its recommendations from two concepts:

- Can the equipment be used
- Should it be used (is it in the best interest of WAJ to obtain and use the AID owned equipment).

The first consideration, can the equipment be used is more straight forward than the second and the answer is already indicated in Section 5. The answer to the second consideration is more difficult with not all aspects of the answer as easily given in objective terms.

GCII has evaluated all aspects of the "should" consideration as objectively as possible with WAJ long-term interests as the criteria for reaching its recommendation.

8.2 "CAN IT BE USED"

As stated in Section 5, the AID-owned SCADA equipment can with modifications to the RTUs and possibly to the CPUs, be used as part of the SCADA system for Greater Amman. The AID owned SCADA CPUs would definitely need modification if it is WAJ intent to start with a SCADA and dispatching system serving the entire Kingdom. The ability and the advisability of trying to stretch the CPU capacity to serve the entire Kingdom is questionable. The requirement for memory as fixed "overhead" in the CPUs capacity for the water system operation software would be substantial for the entire Kingdom. This would also limit WAJ's ability to add new facilities because of growth and system expansion.

In either case, to serve Greater Amman or the entire Kingdom, WAJ would have to add the hardware items required for a complete SCADA system that are not part of the AID-owned SCADA equipment. Hardware and software integration, including integration of the AID-owned equipment will be required prior to shipment of the hardware. These milestone activities were not reached with the AID-owned equipment at the time the Figeh project was stopped.

Water system operating software and other non-hardware items as listed on Table 7-1 would need to be added to a SCADA contract package. WAJ would also determine whether non-SCADA hardware, such as the UPS, emergency generator, etc., should be part of the SCADA system contract package.

A typical project time table to implement a Dispatching Center Program using the AID-owned equipment is shown on Table 8-1.

Figure 8-1 assumes that WAJ will have to go through competitive tendering in the selection of a technical consultant and a turnkey contractor. If either competive tendering stage can be waived, the total period for implemention could be reduced by approximately nine months.

A first look at the elapsed time for project implementation may give the impression that the schedule is overly conservative. It may be possible to reduce the schedule by six to twelve months maximum but GCII's experience indicates this type schedule is realistic where outside funding and therefore outside approvals are required at nearly every milestone.

The Figeh dispatching system actual project schedule would have covered 99 months from the issuance of the RFT to consultants to the scheduled turnover of an operating system to Figeh. Probably 24 months of this total period was due to the need to rebid the contracts because of initial lack of interest and competition. It

was also due to the extended periods in Syria between contract signing and the contract effective dates caused by the requirement to receive approval of the Syrian High Economic Committee. However, after accounting for these time periods the project schedule would still be 69 months or approximately the schedule as shown on Figure 8-1.

Figure 8-1 also presents a schedule for the hydraulic analysis of the Greater Amman distribution system. An important part of the dispatching system design will be the location of distribution system facilities, which should be monitored and controlled from the dispatching center. The parallel schedules indicate that information from the hydraulic analysis should be available at the time it is needed in the dispatching system Feasibility- Preliminary Design Phase.

In summary, subject to the conditions mentioned, the AID owned SCADA equipment could become part of a SCADA system for Greater Ammman and possibly for the entire Kingdom, although the latter would be stretching the capability of the CPU even with an expanded capacity.

The time period to implement a full program even using the AID owned equipment is not likely to be less than four and one-half years under ideal circumstances. If competitive tendering is necessary it is more likely to require nearly six years.

8.3 "SHOULD THE AID OWNED SYSTEM BE USED"

The apparent, if not obvious, advantages of WAJ accepting the AID-owned SCADA equipment are its current availability and possible cost savings. The amount of the savings would depend on the agreement that would be negotiated between WAJ and AID.

However, as indicated previously, even during or after obtaining the AID-owned SCADA equipment, WAJ will have to proceed with a major

program to provide all the other services and contract for the procurement and installation of not only the AID-owned SCADA equipment but substantial other equipment. This equipment, and installed costs, and services will be ten to fifteen times the value of the AID-owned SCADA equipment.

It is also unlikely that obtaining the AID-owned SCADA equipment will substantially shorten the time to place a dispatching center on-line. The detailed studies of feasibility might, at WAJ option, be decreased, but if outside funding is required cutting back in this effort might not be acceptable.

With the need to go into all the details of the WAJ water systems, there is little difference between the two options in the calendar time required to provide the technical services to reach the milestone of tendering for turnkey contracts. As stated, the only cuts in schedule could come from direct selection of a consultant or turnkey contractor but neither of these options is likely to be allowed either by WAJ or a lending agency procurement policies.

The following are considerations, some of which are advantages for not using the AID equipment but rather proceeding in a program that would still lead to a WAJ dispatching center.

8.3.1 Feasibility of a Dispatching Center

The Greater Amman water system has elements of operation and numerous facilities that are likely to justify a dispatching center. Other parts of the Kingdom's water system may not be as easily justified at the present time.

A feasibility study phase will permit more attention to expansion requirements for the Dispatching System based on WAJ's current master planning. This consideration was not able to be given much attention in the time allowed for this study.

A feasibility study to establish and justify benefits will also define priorities and support requests for outside funding if it is required.

This step, possibly with a different level of emphasis on feasibility and priorities, should be considered even if the AID-owned SCADA equipment were used. Therefore, the impact of a feasibility study on total schedule for either option is minimal.

8.3.2 Implementation Schedule

The total time period to implement a program with or without the AID-owned SCADA equipment is not likely to vary more than six months. The milestone activities shown in Figure 8-1 will be essentially the same for either option.

As shown on Figure 8-1, the dispatching center program also needs input from the planned Greater Amman hydraulic network analysis before the total system can be designed and costed.

8.3.3 Capacity of AID-Owned SCADA Equipment

The WAJ water system for Greater Amman will stretch the capacity of the AID-owned CPUs. Although special adaptations of the CPUs may be possible at WAJ's cost, the development and improvement of mini-computers since the equipment selection for the Figeh project in 1980 can provide equipment of greater capacity and capability at about the same cost of the Figeh equipment.

As already noted, the RTUs can be modified for use in Jordan at relatively low cost. Other peripheral equipment has adequate capacity for WAJ needs. However, several items manufactured by Hewlett Packard would need additions or modifications to be compatible with other CPUs if other CPUs are used in the initial dispatching center or added at a later time.

SCHEDULE FOR DISTRIBUTION SYSTEM NETWORK ANALYSIS

ACTION ACTIVITY	MILESTONE ACTIVITY	MILESTONE DATES
Consultants Prepare Tenders	WAJ authorizes TOR for Consultant Tender for Hydraulic Network Analysis	May 1, 1986
WAJ evaluates Tenders, selects Consultant, negotiates, awards, establishes LOC, etc	WAJ Receives Consultants' Tenders	July 1, 1986
	Effective Date of Consultant's Contract	Nov 1, 1986
Consultant prepares hydraulic model and performs hydraulic analysis		
(At approximately month 15 to 16, Consultant furnishes locations of Distribution System facilities for SCADA to SCADA Consultant)		
WAJ reviews & comments on Draft Report	Consultant submits Draft Report	Nov 1, 1987
Consultant revises Draft Report	WAJ furnishes comments to Consultant	Jan 1, 1988
	Consultant submits Final Report	Feb 1, 1988

ASSUMPTIONS:

1. Outside Kingdom financing participation required
2. Outside financing participant as AID or World Bank will require formal competitive Tenders for Consultants and Turnkey Contractor
3. Outside financing participant will require some level of a benefit/cost approach on which to base its financial participation
4. Outside financial participant will be involved in WAJ selection review and approval cycles shown here as "by WAJ"

SCHEDULE FOR DISPATCHING CENTER

MONTHS	MILESTONE DATES	MILESTONE ACTIVITY	ACTION ACTIVITY
0	May 1, 1986	WAJ authorizes preparation of TOR for Dispatching Center Consultant	
1			
2			
3	Aug 1, 1986	WAJ authorizes notice for Consultants to Tender	WAJ prepares TOR
4			
5	Oct 1, 1986	WAJ receives Consultants' Tenders	Consultants prepare Tender
6			
7			WAJ evaluates Tenders, selects Consultant, negotiates, awards, establishes LOC, etc
8			
9	Feb 1, 1987	Consultant contract effective for Feasibility Report	
10			
11			
12			Consultant preparews Feasibility Study with Preliminary Design, Benefit/Costs, Phased Implementation, etc
13			
14			
15			
16			Input received from Distribution System Network Analysis
17	Oct 1, 1987	Consultant submits Feasibility Study to WAJ	WAJ reviews, approves report; negotiates design and supervision phases of
18			
19			
20	Jan 1, 1988	Consultant's contract effective for Design Phase	Consultant's services, authorizes LOC, etc
21			
22			
23			Consultant prepares specifications and contract documents for Turnkey Contractors and with WAJ prequalifies TK Contractors
24			
25			
26	July 1, 1988	Consultant submits Spec's & Doc's to WAJ	
27			
28	Sept 1, 1988	WAJ authorizes notice for TK Contractor's Tenders	WAJ reviews & approves Doc's for issue to TK Contractors
29			
30	Nov 1, 1988	WAJ receives TK Contractors' Tenders	TK Contractors prepare bids
31			
32			
33			WAJ evaluates Tenders, selects TK Contractor, negotiates, awards, establishes LOC, etc
34			
35	Apr 1, 1989	TK Contractor effective date & Consultant's contract effective for Construction Phase	
36			
37			
38			
39			
40			
41			
42			
43			
44			
45			
46			
47			
48			
49			
50			
51			TK Contractor purchases and installs equipment, trains personnel, tests, and starts up Dispatching Center
52			
53			
54			
55			
56			
57			
58			
59			
60			
61			
62			
63			
64			
65	Oct 1, 1991	WAJ Final Acceptance	
66			
67			
68			
69			Optional - TK Contractor Operational Training assistance if required by Contract (Time to be determined say 1 year)
70			
71			
72			
73			
74			
75			
76			
77	Oct 1, 1992	End of Guarantee Period	

FIGURE 8-1
IMPLEMENTATION SCHEDULE

8.3.4 Age of AID-Owned SCADA Equipment

Based on the schedule in Figure 8-1, specifications for the complete dispatching center project will not be prepared until early 1988. At that time the AID-owned SCADA equipment will have been based on concepts and Figeh system requirements made eight years earlier. While the system selected was appropriate for the Figeh project, the improvements in the SCADA equipment items and particularly the CPUs, indicate that the WAJ Dispatching System should be evaluated for its own needs and priorities based on the best equipment system available at the time final equipment specifications are being prepared.

As noted in Section 7, microcomputers available today have capacities four times the capacity of the AID-owned CPUs but cost one-quarter to one-third the price.

Possibly the greatest concern related to the age of the AID-owned CPUs and probably reason for WAJ to plan its own system around new equipment, is the common practice of computer manufacturers to normally provide service and manufacture spare parts for ten years after they stop the manufacture of any computer model. If this normal practice should apply to the AID-owned CPUs, WAJ could expect service and spares for only about two years after the CPUs become operational.

8.3.5 Project Cost

As stated in Section 7, GCII estimates a complete dispatching system for Greater Amman will cost approximately $19,300,000 (U.S. dollar equivalent) and $24,000,000 (U.S. dollar equivalent) for the entire Kingdom. Being prefeasibility type estimates, these estimates can be expected to have variations in the order of ±25 percent. The estimates do, however, show that the AID-owned SCADA equipment is only a small part of the total costs that WAJ will incur when it

commits itself to a central dispatching system for any substantial part of its water system.

On the Figeh Project, the SCADA System Contract was approximately 43 percent of the dispatching system total costs. The AID-owned equipment at its stage of completion and integration represented approximately 13 percent of the total Figeh costs. With the addition of three times the number of RTUs, much larger of facilities to be monitored and controlled, larger communications network required to connect the facilities to the dispatching center, and general cost increases that have occurred since the Figeh project was bid, the value of the AID-owned equipment will be a smaller percentage of the total project costs in Jordan, probably somewhat less than 10 percent.

A further consideration is the probability that WAJ would be required in the interest of uniformity of RTUs and the need to take advantage of system integration already completed by the existing system integrator, loose the benefits that would result from open bidding for the remaining RTUs and the water system operation software. It should be noted that the cost of the additional RTUs and the software development for Greater Amman is estimated to be 10 to 15 percent higher than the value of the AID-owned SCADA equipment.

8.4 RECOMMENDATIONS

GCII has evaluated the technical and practical feasibility of using the AID-owned surplus SCADA equipment in Jordan. Based on this evaluation, it has determined that it would be technically possible to use the AID-owned surplus SCADA equipment as part of a SCADA system serving Greater Amman. For reasons discussed in this report, it is not felt that it is practical, feasible, or in the overall best interest of WAJ to obtain the AID-owned equipment and then develop a complete dispatching system around this equipment.

GCII, therefore, recommends that the AID-owned surplus SCADA equipment should not be used in Jordan by WAJ.

This recommendation is based on the following considerations:

a. The Greater Amman water system will stretch the capacity of the AID-owned CPUs with little room for expansion within Greater Amman or to nearby regions.

b. The AID-owned CPUs will be eight years old by the time tenders would be sought for the balance of the project. Improvements and the development in CPUs in that period make available more powerful equipment which will provide capability for growth in the system and would be more suited to WAJ's current and projected requirements. Service and spare parts may only be available for two years after the system becomes operational.

c. Using the AID-owned equipment is likely to minimize competitive bidding on substantial cost items such as additional RTUs and water system operation software that will be required in the SCADA system contract package.

d. Not using the AID-owned equipment will not have a substantial impact on the schedule for putting a dispatching system into operation.

e. The value of the AID-owned equipment is substantial; it represents about 10 percent of the estimated cost of the overall cost of a total dispatching system facility. However, the conditions under which WAJ could take ownership of the equipment have not been established. In view of the limited capacity and age of the CPUs, the potential for limiting competition on some additional SCADA system components, and since use of the AID-owned equipment will not substantially improve the schedule for placing a dispatching system into

operation, the possible maximum 10 percent savings should be kept in the perspective of the total project cost. SCADA feasibility determinations, priorities for implementation, and the availability of much better equipment should be considered of more importance in WAJ's planning.

f. The water systems operated by WAJ vary substantially in complexity, size, number of facilities, and distance from Amman, the location proposed for a dispatching center. There would appear to be a benefit/cost basis for a dispatching system for Greater Amman. The benefit/costs for other remote areas is not as certain. Alternatives need to be considered including the no-action possibility for some areas. Priorities and schedule for implementation where feasible need to be established.

An example of a possible alternative is the use of distributed processing systems in some regions to monitor and control the water systems in the region. Particular data required for management direction of operations could be transfered to the central computer to minimize operational requirements and data processing in the central computer. Operational monitoring and control would be provided from the regional distributed processing system although some set point operations could be "downloaded" from the central computer.

GCII recommends that WAJ will be best served by a feasibility study which makes the determinations noted in the two preceding paragraphs. A dispatch system for WAJ can be designed based on the best equipment available at that time that is suited to WAJ current and projected requirements. This is preferable to a system that would be fit around the AID-owned equipment with possible compromises to adapt to the capability and capacity of the AID-owned equipment.

DEFINITIONS

ACCUMULATOR	-	A device containing a register which stores a quantity. When a second quantity is delivered to the device, it forms the sum of the quantity standing in the register and the second quantity, and stores the result in the register.
ALPHANUMERIC	-	Characters which may be either letters of the alphabet, numerals, or special characters.
ASSEMBLER	-	A method-system of instruction and subroutines that integrates relevant data into a computer program.
ASSEMBLY LANGUAGE	-	The operational language used in a specific machine-oriented computer program.
AVAILABILITY	-	The fraction of time that the complete system is actually capable of performing its mission.
BAUD RATE	-	A unit of signaling speed derived from the duration of the shortest code element. Speed in baud is the number of code elements per second. A baud may contain one or more bits.
BULK STORAGE	-	Fixed or moving head discs used for storage of programs and data.
BUFFER	-	Intermediate storage area between two systems with different access times.
COMPILER LANGUAGE	-	A computer language system made up of various sub-routines that have been evaluated and compiled into one routine.
CONSOLE	-	The dispatcher's work station consisting of the various elements of the man/machine interface, packaged into a single, large, desk-like unit. Also contains voice communication equipment, writing and storage space, as required.
CORE MEMORY	-	Storage device consisting of ferromagnetic cores with the capability of reading and entering data.
CALCULATED VALUE	-	A variable whose magnitude is determined by a mathematical formula utilizing some other calculated or telemetered value(s).

CPU	-	Central Processing Unit - That portion of a computer that consists of the arithmetic and logic unit, central control unit, main memory, and input/output control units.
CRT	-	Cathode Ray Tube - An electronic tube and all its associated hardware that can produce a visual image on the display surface of an electron beam tube from digital information.
DATA	-	A collection of facts, numeric and alphabetic characters, etc., which is processed by a computer.
DATA BASE	-	A group of facts of statistics related to a specific system.
DATA SET (DS)	-	A modulator/demodulator for converting between serial, digital data and frequency shift key (FSK) tones for transmission on a leased telephone line.
DBM	-	Power level in decibels with reference to a power of one milliwatt.
DEAD BAND	-	The range through which a measured signal may vary without initiating a corrective command.
DE-BUG	-	To determine the correctness of a computer routine by locating any errors and correcting them.
DECIBEL (db)	-	A unit used to measure and compare gains, losses and signal levels on a logarithmic scale.
HARD COPY	-	A document produced in easily readable format, duplicating the contents of a CRT screen.
HARDWARE	-	The mechanical, magnetic, electrical and electronic devices incorporated into the system.
HUMAN ENGINEERING	-	Designing equipment or systems with the abilities and limitations of the human operator in mind.
INTEGRATION	-	The putting together of the hardware and software into a viable control system.
INTERFACE	-	The means used to link components in a control system.
INTERRUPT	-	A means for an external device or process to gain attention from the CPU.
INVERTER	-	An electronic or electromechanical device which changes d-c to a-c.

I/O	-	Input/Output - Pertaining to all hardware and activity that transfers information into or out of a computer.
KEYBOARD (KBD)	-	Associated with the CRT for data entry and similar operations. Includes special function keys for control and data entry.
KEYBOARD SEND/ RECEIVE (KSR)	-	A teletypewriter or CRT terminal used for programming and running diagnostics on the main CPU's.
LIBRARY	-	An organized collection of standard and proven routines and sub-routines which may be incorporated into larger routines.
LIMITED GRAPHIC DISPLAY	-	A CRT presentation in which alphanumeric and special symbols are generated by a dot matrix as part of a raster. These characters can be positioned arbitrarily in a fixed, rectilinear coordinate system constituting the screen of the CRT.
LINK	-	Coding that connects two separately coded routines.
LOAD	-	To place data into internal storage.
LOGGER	-	A printing device used to record alarms, logs and other pertinent operating information, and program listings.
MAGNETIC TAPE	-	A storage system utilizing magnetic spots (bits) on coated plastic tape.
MALFUNCTION	-	A failure in operation.
MEMORY	-	Internal storage.
MESSAGE	-	A group of words, variable in length, transported as a unit.
MODEM	-	Acronymn for MOdulator - DEModulator.
MTBF	-	The mean time between failures of a repairable item of hardware computed from its design considerations, historical data and from the failure rate of its parts for the intended conditions of use.
MTTR	-	The mean time required to repair a repairable item of hardware computed from design considerations, historical data, and the time required to repair or replace its parts.

OFF-LINE	-	Any period of time during which the digital system is not performing its designated functions. Tasks accomplished on equipment not part of the dispatch system.
ON-LINE	-	Any period of time during which the digital system is performing its designated functions. Tasks performed on the dispatch system without interference with normal, periodic or demand functions.
OVERLAY	-	A technique for bringing routines into high speed memory from some other form of storage during processing so that several routines will occupy the same storage locations at different times.
PARAMETERS	-	Any specific characteristics of a system.
PATCH	-	Section of coding inserted into a routine to correct a mistake or alter the routine.
PERIPHERAL DEVICES	-	Equipment which is not an integral part of the basic unit or system, but works in conjunction with it.
PROGRAM	-	A plan for the solution of a problem.
PROGRAMMER	-	A person who prepares instruction sequences without necessarily converting them into the detailed codes.
REAL-TIME	-	Processing or computations performed on a time scale comparable to the related physical process, or the actual time period during which a physical process transpires, or, with no protracted delay in the accomplishment of a system task.
REDUNDANCY	-	Any deliberate duplication or partial duplication of equipment to decrease the probability of system failures.
REGISTER	-	The hardware for storing one or more computer words.
REFRESH RATE	-	The rate at which the buffers associated with the CRT's are updated.
RTU	-	Remote Terminal Unit - That portion of the system which measures and converts physical quantities to number sequences for transmission, receives and converts signals in digital form to a form usable by Company equipment, and notes and transmits the status of Company equipment.

'SCADA'	-	Acronym for Supervisory Control and Data Acquisition.
SCAN	-	To send a command to a piece of hardware requesting that specified sensors be connected to measuring equipment and a digital count value or a binary digit be generated and transmitted to the Master Computer. The computer processes the received data point-by-point in logical sequence, and stores the data for future use.
SNAPSHOT	-	A record or records of all system variables stored for future reference.
SOFTWARE	-	Programs or routines which instruct the operations of computer(s) and the supporting documentation which describes them.
SPOOL	-	Acronym for Simultaneous Peripheral Output On-Line.
SUBROUTINE	-	The set of instructions necessary to direct the computer to carry out a well defined mathematical or logical operation.
SURGE	-	A sudden, temporary increase in current or voltage in a circuit.
TELEMETRY	-	The science of measuring quantities, transmitting the measured values to a distant station, and there interpreting, indicating or recording the quantities measured.
TELETYPE (TTY)	-	A keyboard send/receive (KSR) device used at remote manned sites for hard copy communications.
UPS	-	Acronym for Uninterruptible Power Supply. Generally made up of a battery bank with associated battery chargers and inverters.
VALIDITY	-	Correctness, especially the degree of the closeness by which the iterated results approach the correct results.

APPENDIX B

RTU POINT REQUIREMENTS BY FACILITY & FUNCTION

FUNCTION NAME	POINT TYPE DC IN	DC OUT	ANALOG	SENSOR INFO
PUMPING STATIONS				
Power Supply (each)				
1. Low Voltage	x			
2. High Voltage	x			
3. Transformer Fail (each)	x			
4. Ground Fault	x			
5. Over Current	x			
6. Control Power Failure	x			
7. Reverse Phase	x			
Pumping System (each)				
1. Remote-Local Sel. Sw. in Remote	x			
2. Remote-Local Sel. Sw. in Local	x			
3. Auto-Manual Sel. Sw in Auto	x			
4. Auto-Manual Sel. Sw in Manual	x			
5. Pump System Discharge Pressure			4 to 20ma	g/CM^2
6. Discharge Flow			4 to 20ma	M^3/H
7. Anti-Water Hammer System	x			
Pumps (each)				
1. Pump No. Start		x		
2. Pump No. Stop		x		
3. Pump No. Running	x			
4. Pump No. Off	x			
5. Pump No. Fail	x			

FUNCTION NAME	POINT TYPE DC IN	DC OUT	ANALOG	SENSOR INFO
Motor-Operated Valves (Pump Discharge)(Each) (1)				
1. M.O.V. No. Opened	x			
2. M.O.V. No. Closed	x			
3. M.O.V. No. Fail	x			

(1) assumes M.O.V. Open and Close controls will be handled by pump Open and Close control.

Valves in Pump Station Building or Yard Piping to Split, Divert or Control Flows (each)				
1. M.O.V. No. - Open		x		
2. M.O.V. No. - Close		x		
3 M.O.V. No. - Stop		x		
4. M.O.V. No. - Opening	x			
5. M.O.V. No. - Closing	x			
6. M.O.V. No. - Opened	x			
7. M.O.V. No. - Closed	x			
8. M.O.V. No. - Position			4 to 20ma	0 to 100%
9. M.O.V. No. - Fail	x			

- Flow Meters for measurment of influent flows from more than one location or after split of discharge from a pumping system (each).

Emergency Generator				
1. Emergency Generator Running	x			
2. Emergency Generator Off	x			
3. Emergency Generator Fail	x			

FUNCTION NAME	POINT TYPE DC IN	DC OUT	ANALOG	SENSOR INFO
RESERVOIRS				
Power Supply (each)				
1. Low Voltage (2)	x			
(2) If reservoir is part of another facility with power supply, this point not required.				
Water Level Indicator				
1. Water Level			4 to 20 ma	M
Pump Controls				
1. Reservoir Level Too High	x			
2. Stop Pump During Night	x			
3. Start Pump During Night	x			
4. Stop Pump During Day	x			
5. Start Pump During Day	x			
6. Reservoir Level Too Low	x			

- Flow Meters and motor-operated control valves at reservoir will have same number of RTU points as at Pumping Station

BOREHOLES (WELLS)				
1. Pump Start		x		
2. Pump Stop		x		
3. Volts AC	x			
4. Low Level Trip	x			
5. Pump Running	x			

FUNCTION NAME	POINT TYPE DC IN	DC OUT	ANALOG	SENSOR INFO

Boreholes with Booster Pumps or Chlorination - add points to fit configuration of these facilities.

BOOSTER PUMP STATIONS

Similar to Pumping Stations.

SPRINGS

1. Water Level			4 to 20 ma	M

CHLORINATION STATION

Chlorine Room (each)

1. Cl Storage Room Door Opened	x			
2. Cl Storage Room Door Closed	x			
3. Cl Leak	x			

Chloring Scale (each)

1. Cl Scale	x			

Chlorinators (each)

1. Chlorinator Running	x			
2. Chlorinator Off	x			
3. Chlorinator Fail	x			
4. Chlorinator Dose Increase		x		
5. Chlorinator Dose Decrease		x		
6. Chlorinator Dose Stop		x		
7. Chlorinator Flow			4 to 20 ma	M^3/SEC

FUNCTION NAME	POINT TYPE DC IN	DC OUT	ANALOG	SENSOR INFO
PRESSURE REDUCING VALVES - DISTRIBUTION				
Assumes 2 - PRVs, 2 PR & 1 FM at each location				
Operation				
1. Remote-Local Sel. Sw in Remote	x			
2. Remote-Local Sel. Sw in Local	x			
PRV (each)				
1. M.O.V. - Open		x		
2. M.O.V. - Close		x		
3. M.O.V. - Stop		x		
4. M.O.V. - Opening	x			
5. M.O.V. - Closing	x			
6. M.O.V. - Opened	x			
7. M.O.V. - Closed	x			
8. M.O.V. - Position			4 to 20 ma	0 to 100%
9. M.O.V. - Fail	x			
Pressure Recorder (each)				
1. Distribution Pressure			4 to 20 ma	g/cm^2
Flow Meters (each)				
1. Distribution Flow			4 to 20 ma	M^3/H
FLOW METERS - DISTRIBUTION				
1. Distribution Flow			4 to 20 ma	M^3/H

FUNCTION NAME	POINT TYPE DC IN	DC OUT	ANALOG	SENSOR INFO
PRESSURE RECORDERS - DISTRIBUTION				
1. Distribution Pressure			4 to 20 ma	g/cm^2
WATER TREATMENT PLANTS				
1. Influent Flow (Pumped Rate to Raw Water Tanks)			4 to 20 ma	M^3/H
2. Treatment Flow			4 to 20 ma	M^3/H
3. Plant Discharge Rate (Pumped Rate to Terminal Reservoir)			4 to 20 ma	M^3/H

Gilbert/Commonwealth
209 E Washington Avenue Jackson, MI 49201

CALCULATION SHEET

REV.

CLIENT/OWNER		FILING CODE
USAID/WAJ - SCADA		JOB NO.
CALC. BY/DATE (SIGNATURE)	SUBJECT POINT EST.	SHEET OF
CHECKED BY/DATE (SIGNATURE)	BOREHOLES	BOOK NO.

Region: AMMAN

B.H. Location/Area: QASTAL Govern: AMMAN RTU:

B.H. Identification Nos. 4, 5, 11, 14, 15, 16, 17

B.H. Pump to: Qastal SRV.

ITEM	UNITS	PTS. REQ'D PER UNIT	EST. PTS. DC IN	DC OUT	ANAL
Boreholds	7	Units X 3 (DC IN) 2 (DC OUT)	21	14	
Flow Meters (B.H. Groups to P.S. Supply Reserv.		Units X 1 (ANAL.)			
		~~(Sub)~~ Total	21	14	

Special B.H.'s

RTU Provided -
Use other available RTU -

Discharge Control Valves w/Sel. Sw		Units X 5 (DC IN) 3 (DC OUT) 1 (ANAL.)			
Flow Meters		Units X 1 (ANAL.)			
		(Sub) Total			

B.H.'s with Booster Pumps

Booster Pumps or Large Booster Pumps		Units X 3 (DC IN) 3 (DC IN) 3 (DC OUT)			
		(Sub) Total			

Chlorination at B.F. or B.S.

Chlorination		Units X 2 (DC IN)			
		TOTAL PTS.			

FORM CAI/DCP 112 (9/78)

Gilbert/Commonwealth
209 E. Washington Avenue, Jackson, MI 49201

CALCULATION SHEET

REV.

CLIENT/OWNER		FILING CODE
USAID/WAJ - SCADA		JOB NO.
CALC. BY/DATE (SIGNATURE)	SUBJECT POINT EST	SHEET OF
CHECKED BY/DATE (SIGNATURE)	RESERVOIR SRV	BOOK NO.

Reservoir: QASTAL
Location: QASTAL

Region: AMMAN
Govern: AMMAN
RTU:

ITEM	UNITS	PTS. REQ'D PER UNIT	DC IN	DC OUT	ANAL
Low Voltage		Units X 1 (DC IN)			
Water Level Indicator & Pump Controls	/	Units X 8 (DC IN) 1 (ANAL)	8		/
Influent Flow Meter(s)		Units X 1 (ANAL)			
Influent Control Valve(s)		Units X 5 (DC IN) 3 (DC OUT) 1 (ANAL)			
Influent Control Valve Set Sw.		Units X 4 (DC IN)			
Discharge Control Valve(s)		Units X 5 (DC IN) 3 (DC OUT) 1 (ANAL)			
Discharge Control Valve Set Sw.		Units X 4 (DC IN)			
Discharge Flow Meter(s)	/	Units X 1 (ANAL)			/
Other o					
o					
o					
o					
o					
o					
		TOTAL PTS.	8		2

FORM CAI/DCP 112 (9/78)

Gilbert/Commonwealth
209 E. Washington Avenue, Jackson, MI 49201

CALCULATION SHEET

REV.

CLIENT/OWNER		FILING CODE
USAID/WAJ - SCADA		JOB NO.
CALC. BY/DATE (SIGNATURE)	SUBJECT POINT EST.	SHEET OF
CHECKED BY/DATE (SIGNATURE)	PUMP STATION	BOOK NO.

STATION: QASTAL
LOCATION: QASTAL

Region: AMMAN
Governate: AMMAN

RTU:

ITEM	UNITS	PTS. REQ'D PER UNIT	DC IN	DC OUT	ANAL.
Power Sources(s)	2	Units X 7 (DC IN)	14		
Influent Control Valves(s)	See Other	Units X 5 (DC IN) 3 (DC OUT) 1 (ANALOG)			
Influent Flow Meter(s)	—	Units X 1 (ANALOG)			
Pumping System(s)	4	Units X 4 (DC IN)	16		
Pumps with MOV or PNOV	9	Units X 6 (DC IN) 2 (DC OUT)	54	18	
Discharge Flow Meter(s)	3	Pump Sys Units X 1 (ANALOG)			3
System Discharge Press.	3	Pump Sys Units X 1 (ANALOG)			3
Discharge Control Valve(s)	3	Units X 5 (DC IN) 3 (DC OUT) 1 (ANALOG)	15	9	3
Water Hammer Systems	3	Units X 1 (DC IN)	3		
Other o Interconn - Swaqa Supply to SRV Inlet	1	Units x 5 (DC IN) x 3 (DC OUT) x 1 (ANALOG)	5	3	1
o Inlet Yard Piping-MOV	5	Units x 5 (DC IN) 3 (DC OUT) 1 (ANALOG)	25	15	5
o Pressure Recorders	2	Units x 1 (ANALOG)			2
TOTAL PTS.			132	45	17

FORM CAI/DCP 112 (9/78)

Gilbert/Commonwealth
209 E Washington Avenue Jackson, MI 49201

CALCULATION SHEET

REV.

CLIENT/OWNER		FILING CODE
USAID/WAJ - SCADA		JOB NO.
CALC. BY/DATE (SIGNATURE)	SUBJECT POINT EST.	SHEET OF
CHECKED BY/DATE (SIGNATURE)	BOOSTER P.S.	BOOK NO.

Region: AMMAN
Govern: AMMAN
RTU:

Name: 5TH CIRCLE
Location: 5TH CIRCLE

Boosts Flow From:

To :

ITEM	UNITS	PTS. REQ'D PER UNIT	EST. PTS. DC IN	DCOUT	ANALOG
Power Source	1	Units X 7 (DC IN)	7		
Reserv. Water Level & Pump Controls	—	8 (DC IN) Units X 1 (ANAL.)			
Influent Flow Meter(s)	1	Units X 1 (ANAL.)			1
Influent Control Valves(s)	—	Units X 5 (DC IN) 3 (DC OUT) 1 (ANAL.)			
Pump System(s)	1	Units X 4 (DC IN)	4		
Pumps with MOV	1	Units X 6 (DC IN) 2 (DC OUT)	6	2	
System Discharge Press	1	Units X 1 (ANAL.)			1
Discharge Flow Meters	1	Units X 1 (ANAL.)			1
Discharge Control Valves	1	Units X 5 (DC IN) 3 (DC OUT) 1 (ANAL.)	5	3	1
Other o Influent Pressure Gage	1	Units x 1 (ANALOG)			1
o Discharge Control Valve Selector Switch		Units x 4 (DC IN)	4		
		TOTAL PTS.	26	5	5

FORM CAI/DCP 112 (9/78)

45

Gilbert/Commonwealth
209 E. Washington Avenue, Jackson, MI 49201

CALCULATION SHEET

REV.

CLIENT/OWNER		FILING CODE
USAID/WAJ - SCADA		JOB NO.
CALC. BY/DATE (SIGNATURE)	SUBJECT POINT EST.	SHEET OF
CHECKED BY/DATE (SIGNATURE)	CHLORINATION	BOOK NO.

CHLORINATOR SITE: QASTAL PS REGION: AMMAN

LOCATION: QASTAL GOVERN: AMMAN RTU:

ITEM	UNITS	PTS. REQ'D PER UNIT	EST. PTS. DC IN	DC OUT	ANAL
Chlorine Room(s)	1	Units X 3 (DC IN)	3		
Chlorine Scale(s)	1	Units X 1 (DC IN)	1		
No. of Chlormators	2	Units X 3 (DC IN) 3 (DC OUT) 1 (ANAL.)	6	6	2
		TOTAL PTS.	10	6	2

FORM CAI/DCP 112 (9/78)

Gilbert/Commonwealth
209 E. Washington Avenue, Jackson, MI 49201

CALCULATION SHEET

REV.

CLIENT/OWNER		FILING CODE
USAID/WAJ - SCADA		JOB NO.
CALC. BY/DATE (SIGNATURE)	SUBJECT POINT EST.	SHEET OF
CHECKED BY/DATE (SIGNATURE)	SYS PRV/CONTROL VALVE	BOOK NO.

REGION*	LOCATION	RTU NO.	DC IN	DC OUT	ANALOG
	o EACH UNIT		12	6	5

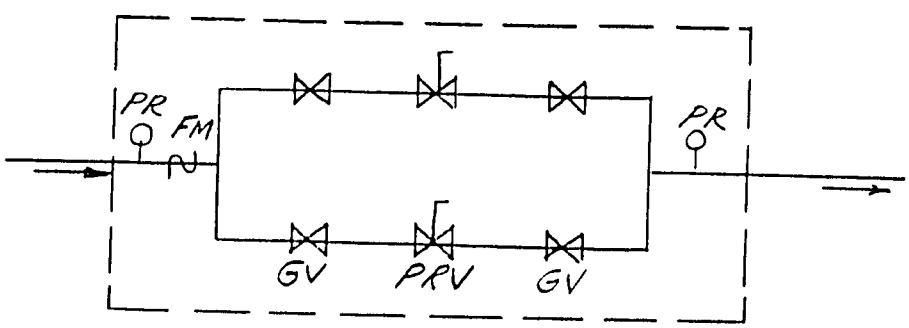

* One region per sheet.
Group System Valves with other Control Valves, Flow Meters and Pressure Recorders by District & Proximate Locations to Reduce Number of RTU's.

FORM CAI/DCP 112 (9/78)

Gilbert/Commonwealth
209 E. Washington Avenue, Jackson, MI 49201

CALCULATION SHEET

REV.

CLIENT/OWNER		FILING CODE
USAID/WAJ - SCADA		JOB NO.
CALC. BY/DATE (SIGNATURE)	SUBJECT POINT EST.	SHEET OF
CHECKED BY/DATE (SIGNATURE)	SYS FLOW METERS & SYS PRESS RECORD	BOOK NO.

SYS. FLOW METERS

REGION	LOCATION	RTU NO.	DC IN	DC OUT	ANALOG
	o EACH UNIT				1

SYS. PRESSURE RECORDERS

	o EACH UNIT				1

FORM CAI/DCP 112 (9/78)

A8