PD-AAQ-916
ISN 35885

PRELIMINARY PLANNING STUDY FOR PUSPIPTEK ENERGY RESEARCH LABORATORY

REPORT OF U.S. DEPARTMENT OF ENERGY TEAM

JULY, 1980

PREPARED FOR

ASIA BUREAU

U.S. AGENCY FOR INTERNATIONAL DEVELOPMENT

WASHINGTON, D.C.

PRELIMINARY PLANNING STUDY FOR PUSPIPTEK ENERGY RESEARCH LABORATORY

REPORT OF USDOE TEAM

Team Members:

Richard M. Adams
Argonne National Laboratory

Roland A. Beck
U.S. Department of Energy

Sabri Ergun
Lawrence Berkeley Laboratory

Marvin Miller
Massachusetts Institute of Technology

George Warfield
Solar Energy Research Institute

DOE Coordinator:

Donald C. Foster
Office of International Affairs

July, 1980

ACKNOWLEDGMENT

In the course of a short three-week visit it was not possible to make an in-depth, detailed study of all aspects of the Indonesian energy and resources. However, our work was made easier by the preparations which had been made for our visit and by the excellent briefings and discussions which had been arranged.

The staff of the AID mission in American Embassy in Jakarta was extremely helpful, and we are especially grateful to Mr. William Littlewood for his help, his advice and his patience.

While it is not possible to name all our Indonesian colleagues who contributed so much to making our visit pleasant and productive, we do wish to extend our thanks to Minister B. J. Habibie for his support, understanding and gracious acceptance of our draft report. Thanks also are due to Harsono Pusponegoro, Director of the Technology Development Department of BPPT, for putting at our disposal the resources of his department and for the many arrangements made on our behalf. And last we would like to extend our very special thanks to Dr. Soedjana Sapiie and his many colleagues who arranged and accompanied us on the visits and participated in the discussions. Their knowledge, enthusiasm and many kindnesses collectively, and Dr. Sapiie's personal contributions, were very sincerely appreciated.

EXECUTIVE SUMMARY

The following recommendations are based on the goals and objectives given in Section I of the report:

Section II. Energy Planning Group

A. Establish an energy information system.

B. Assess the possibility for decreasing the level and changing the pattern of future fuel use in Indonesia by inter-fuel substitution, improved end-use efficiency in equipment and processes, and conservation.

C. Develop the capability for taking institutional, social and environmental factors into account in energy planning.

D. Resources.

1. Three-four senior people plus three-four junior people to start--eventually expand to 15-20 total.

2 As time permits, send all member abroad for training for periods of 3 months to 2 years.

Section III. Training and Education

A. Provide on-the-job training assignments abroad.

B. Provide post-graduate scholarships in-country.

C. Provide post-graduate scholarships abroad.

D. Provide opportunities to attend institutional meetings and conferences.

E. Institute series of seminars and lecture courses.

Section IV. Coal Research and Development

A. Coal gasification studies should be given high priority, leading to building a small versatile gasification "pilot plant" (process development unit) at PERL.

B. Second priority should be given to study of coal liquefaction leading ultimately to building a small, versatile liquefaction plant at PERL.

C. Emphasis should be given to developing means of making metallurgical coke from Indonesian coal, supporting the activity now in progress at Ombilin.

D. Other research and development activities should relate to the conversion of oil-fired power plants to coal or coal/oil mixtures, and to coal/water slurry transport.

E. Resources

1. These programs could be started with 8 scientists and engineers and 16 support personnel, and ultimately level off at 30 professionals and 70 support personnel.

2. Direct training experience abroad for at least four senior engineers in both gasification and liquefaction would be desirable before designing and building such facilities at PERL.

Section V. Biomass Energy Programs

A. An evaluation should be made of the agricultural and forest residues available.

B A complete study should be made of the problems and possibilities of developing energy farms.

C. A complete assessment should be made of energy forms and patterns of use to guide the selection of conversion technology.

D. An evaluation should be made of the various biomass use options such as the following:

1. Char production for cooking.
2. Methane from biomass fermentation.
3. Direct combustion for power or electricity generation.
4. Gasification of biomass.
5. Direct liquefaction of biomass
6. Production of alcohol from sugar or starch-bearing crops.
7. Multi-purpose or combinational approaches.
8. Direct combustion for household use.

E. Resources

1. In the first year it is recommended that 10 staff scientists/engineers and 4 technicians be made available to carry out the recommended research and development. In the second year 16 staff and 22 technicians should be added, and in the third year another 16 staff and 28 technicians.
2. The total cost of equipment over the three year period may be as much as $2.5 million.
3. Two standard laboratory areas about 25 x 42 ft in area, and one high bay laboratory area 40 x 50 x 25 ft high are recommended.

Section VI. Direct Solar Conversion Program

A. It is recommended that the solar program consist of four parts, some of which is now on-going:

1. The photovoltaic program should cover photovoltaic applications, panel assembly, cell fabrication and cell testing.

2. The thermal conversion program should consist of studies of crop and fish dryers, solar stills, dessicant cooling and solar ponds.

3. A biodigester program should be pursued. (This is also covered under item V D2).

4. A rural energy center program should be developed which concentrates on using photovoltaics, biodigester, wind or any combination of these, for rural use.

B. Resources

1. The recommended staff would consist of 30 professionals (6 seniors and 24 juniors).

2. A total of about 650 m^2 office and laboratory space is recommended.

3. The roof of the laboratory building should be designed to accommodate solar hardware and systems for testing purposes.

4. A fenced-in field of 20 x 20 meters is recommended for solar pond tests.

5. The above recommendations would entail a budget of about $120,000 per year.

General Observations

A. To implement all of the activities recommended above at the levels of support suggested would require that a staffing level of about 86 senior staff and about 156 junior support personnel should be reached in about 3-5 years.

B. Capital expenditures only for laboratories and supporting equipment for the recommended activities (exclusive of coal gasification or liquefaction "pilot plants") would amount to about $3,000,000 in the first 3-5 years.

C. It is assumed that the highest priority will be given to beginning to acquire the best possible energy library. This is considered crucial for the success of the Laboratory.

D. Experience in other countries indicates that the best and most rapid research progress is made by an organization where the highest possible percentage of senior personnel are full-time staff members, compensated at a level to attract and hold the most competent scientists and engineers.

INTRODUCTION

At the request of the U.S. Agency for International Development, the U.S. Department of Energy organized a team from government and private organizations to assist the Indonesian government in a preliminary planning study for the PUSPIPTEK Energy Research Laboratory (PERL).

The preliminary planning study was expected to form the basis for:

a. Project Definition - formulating clear operational concepts.

b. Preliminary Plan Formulation - a framework for further development.

To accomplish these objectives, the team was charged with the following statement of work:

a. Define the purpose and objectives of the laboratory;

b. Identify the principal programmatic foci of the laboratory;

c. Estimate the physical plant and equipment as well as staffing requirements;

d. Consider the possible relationships of the laboratory with other governmental and non-governmental technical institutions;

e. Prepare a tentative estimate of the costs of initial laboratory development if certain choices are made.

The team spent 3 weeks in Indonesia from March 1 to March 21, 1980. During this time visits were made to, and extensive discussions held with personnel of:

a. Lemigas

b. Directorate General of Energy

c. Research Center for Electricity (PPMK)

d. Bandung Institute of Technology (ITB)

e. Indonesian Institute of Science (LIPI)

f. Mineral Technology Development Center

g. Gajah Mada University

h. Institute for Agricultural Research (IPB)

i. Ombilin Coal Mine

j. Water Hyacinth Biodigester Project

ENERGY POLICY

Government policy is oriented toward the development of both underutilized conventional sources such as coal, hydropower and natural gas, as well as nonconventional sources such as solar power, geothermal and biomass. In the near term, oil resources will be explored and tapped more extensively; in the medium term (to 1989) the focus will shift to increasing utilization of energy sources, particularly coal, developed in the diversification program; and in the long term conservation will be emphasized, and nuclear power is being considered.

Government policy also reflects the attempt to balance energy resource exploitation for both export and domestic use with the need to preserve an adequate resource base for future economic growth. In order to encourage the development of alternate energy resources, the Energy Research Laboratory has been established as part of the Agency for Development and Application of Technology (BPPT) to carry out the missions described in the section of this report on Goals and Objectives. The Laboratory will be located on the site of the National Center for Research, Science and Technology (PUSPIPTEK).

ENERGY RESOURCES

Overall, an analysis of domestic energy demand is difficult because 80% of the Indonesian population lives in rural or semi-rural areas where firewood furnishes most if not all of local energy needs. Many Indonesians live without electricity; few can afford petroleum products except for kerosene for cooking. No exact figures are available on the consumption of firewood, but the size of the demand and its negative impact on Java's forested

areas has forced the government to establish a reforestation program. In the paragraphs below summarizing the Indonesian energy situation, consumption figures refer to the urban residential demand, and industrial and transportation fuel and power requirements. A 1975 estimate of total energy demand by sector listed 43% consumed by transportation, 35% by households, and 22% by electricity generation and industry.

1. Petroleum

Indonesia is the second largest oil producer in South and East Asia with an average output of 1.4 - 1.7 million bpd. Estimates of Indonesian oil reserves are between 10 and 11 billion barrels. About 330,000 bpd, or 20% of total daily production, are consumed domestically. Approximately 30% of Indonesia's oil is produced offshore, a sector which has grown rapidly since the first offshore well came on-stream in 1973. Indonesia appears to have a good potential for future discoveries since a large portion of offshore areas are still unexplored.

2. Hydropower

Hydropower supplied 532 MW, or 12% of the 4400 MW total (state plus private) electricity production in 1976. Most hydro generation plants were built as multi-purpose projects combining flood control, irrigation and electricity generation tasks. Ninety percent of installed hydroelectricity capacity is located on Java. More than 90% of the remaining hydroelectric potential of 31,000 MW is outside of Java, in Irian Jaya, Sumatra and Kalimantan. The government has in recent years turned toward the installation of micro-hydro-electric projects to produce power in rural areas away from the main supply centers. About 80 KW of electricity production were added from this source in 1976.

3. Natural Gas

Indonesia has proved reserves of natural gas estimated at 3,471 trillion cubic feet, most of this in reservoirs near Bontang in East Kalimantan and Aceh in North Sumatra. In the past most natural gas has been flared or vented, but the amount of output currently flared has been reduced to about 48% of the approximately 550 million cubic feet of gas produced in 1977. Indonesia has invested in a number of natural gas utilizing projects, including two large LNG plants at the locations mentioned above as well as petrochemical, fertilizer and power generation plants.

4. Coal

Reserves are estimated at 12,582 million metric tons, but much of this is in the form of high volatile content bituminous coal and lignite. The best deposits of anthracite and bituminous coal are located in South Sumatra. Production from Indonesia's two main fields at Ombilin and Bukit Asam, Sumatra, amounted to 230,000 metric tons in 1977. Most of this is used domestically. The government is strongly convinced that coal resources must be developed and put to use in power generation to substitute for generating facilities that are oil-fired at the present time. To this end, the govenment has obtained financing for the expansion and rehabilitation of the facilities at the two major fields and a transport system to supply coal to power plants on Java. According to the new energy program, production for the early 1980's will exceed 2 million metric tons annually.

5. Nonconventional Sources

The Indonesian government is seriously interested in developing the energy potential in its numerous geothermally active areas as well as investigating the applicability of solar, wind and biomass energy sources to the

energy needs of the outlying islands. A 30 MW pilot geothermal power project has been constructed at Kamojang, Java.

6. Electric Power

Total electric power generation capacity amounted to about 4400 MW in 1976 of which about half was produced by the PLN, the state electricity enterprise. Captive power plants supplied the remainder. About 2/3 of electricity supplies came from oil or gas fired thermal power plants or diesel generators. Almost all industries rely upon their own generating facilities in large part due to the unreliability of the PLN distribution systems and service. Some 70% of the electricity is generated on the island of Java, the other 30% being spread among the other islands. It is planned that by 1989 the whole of Java will be on a single interconnected grid.

OVERVIEW

The energy problems faced by Indonesia are unique and complicated by unusual geographic and demographic factors. With a population estimated to be about 140,000,000, Indonesia is the fifth most populous country in the world. Although there are about 1000 populated islands (out of a total of more than 13,000) in the country, the bulk of the population is found on the four largest (Java, Sumatra, Kalimantan, Sulawesi), and in fact more than 60% of the total population lives on the island of Java, the smallest of the four. Further, some 80% of the population lives in rural villages, of which there are estimated to be about 60,000, with about 75% on Java alone. However, this situation is changing with increasing urbanization.

After evaluation of the information available to the team members, including the results of our field visits and discussions, it became evident that Indonesia's two energy needs are at opposite ends of the spectrum, namely, to provide small disperse energy sources suitable for rural areas, and to

utilize its large deposits of coal to reduce the domestic demand on petroleum. Clearly, therefore, the orientation of the Energy Research Laboratory toward coal gasification and liquefaction, and the development of biomass and solar energy resources is appropriate.

The report which follows presents the team's views of the objectives of the Laboratory, its recommendations for research programs, and physical plant, equipment, staffing and cost estimates. If these recommendations are implemented, the Laboratory should produce results which are responsive to the energy needs of rural Indonesia and should also make significant economic contributions in the substitution of coal for oil.

In addition to the obvious areas of energy production, conversion and storage, there are three other aspects of energy R & D which should not be overlooked: conservation, and economic and social implications. Research leading to improvements in any of these is likely to have significant impact on the others. Clearly, the Laboratory must be fully cognizant of, and competent in, these areas, although they were not specifically within the purview of the team. Also, geothermal energy resources in Indonesia could be extensive, but this too was not included in the team's mission. Nevertheless, the identification and development of such resources should be pursued.

The omission of any given line of research from this report should not be construed to mean that it is to be excluded from consideration. It was not possible in the limited time available to explore in depth all possible avenues of research in the three major program areas, coal, biomass and solar. While the recommended research projects are those which we believe to be of greatest importance to Indonesia, it is possible that other promising projects

will emerge in further laboratory definition studies. Thus, this report should be considered to be a planning document which suggests the principal initial programmatic research foci for the laboratory.

SECTION I

GOALS AND OBJECTIVES

In the following sections of this report, recommendations are made for various activities which we believe should constitute the research, development and demonstration projects of the PERL. These recommendations are based on our understanding of the goal and objectives of the Laboratory. As given below, these goals and objectives represent a summary of many discussions, both formal and informal. We believe they are appropriate and define very well the missions of the Laboratory.

1. Undertake a broad-based program of interdisciplinary and mission-oriented hardware research, development, and demonstration (R, D + D).

Emphasis should be placed on those techniques which utilize abundant, indigenous resources and have the potential for a significant amount of value-added from local manufacture. Thus, in the near and mid-term at least, such technologies as fusion, solar power satellites, OTEC, MHD and oil shale do not merit research support, although the Laboratory should keep abreast of the global state-of-the-art in the entire spectrum of technologies relating to energy production, conversion, and utilization. This can be accomplished by evaluating the relevant international literature, and by occasional attendance at international conferences; the former points to a requirement for superior library facilities with strong links to information banks outside Indonesia.

Large-scale commitments to particular realizations of a given technology should be avoided. International research on energy--particularly on alternatives to traditional uses of fossil fuels-- is in a state of flux, and important breakthoughs can be expected. Thus, the emphasis should be on pilot

projects within a given generic energy discipline, rather than "locking-in" a major fraction of the Laboratory resources to, for example, a specific solar photovoltaic technology, a specific scheme for coal liquefaction, liquid fuel from a particular biomass resource, or the like. The role of the Laboratory should be to provide "getting started" resources; that is, seed funds to encourage work in a variety of promising areas, not to become a demonstration ground for new technologies which have not been proven internationally.

2. Conduct comprehensive and objective policy studies and assessment of alternate energy strategies.

The overall objective of energy research planning can be briefly stated: given some broad development goals as, for example, achieving a certain per capita economic growth rate and level of equity in income distribution, then to determine what options Indonesia has for meeting the energy demand implied by these goals, and to assess the relative costs and benefits of these options.

In this work, it will be important to give due weight to opportunities for decreasing energy demand as well as for increasing energy supply; that is, research aimed at increasing the productivity of a Btu of energy should receive at least as high a priority as development of new fuel resources. Also, due account must be taken of energy "quality"; that is, not all Btus of energy are the same: some have more value, are more useful than others. For example, the laws of thermodynamics tell us that a Btu of high temperature heat can do more work than a Btu of low temperature heat. Thus, in deciding on appropriate energy sources for Indonesia, not only quantity, but also quality, as well as concentration, reliability, environmental impact, and ease of transport should be considered.

3. Expand educational and training opportunities in relevant energy areas and develop the manpower with the skills and experience necessary to deal with energy problems

The Laboratory cannot, of course, take over the role of the universities in Indonesia in the task of building a strong educational base, specifically in disciplines relevant to energy. However, it should provide funds to support energy research by graduate students and staff, either at the universities or, in cases where the necessary expertise or equipment is lacking, at the PUSPIPTEK Energy Research Laboratory (PERL) itself. In addition, there should be opportunities for the in-house staff to obtain hands-on expertise at leading energy research centers abroad. On their return, these individuals would be expected to share their expertise via lectures and in-house training courses for staff and other interested parties. To the extent that a particular foreign institution offers a wide range of superior training opportunities, it may be desirable to establish a special relationship with it, encompassing inter-change of personnel on a regular basis working on projects of mutual interest. In general, however, staff should be sent to and, as necessary, consultants drawn from a variety of institutions.

4. Communicate research results to potential users, especially in energy-intensive industries, and promote the transfer of new technologies into practice

The overall purpose of the Laboratory is to contribute to the goal of providing adequte supplies of energy for Indonesia now and in the future. However, its effectiveness will be limited unless there is a full and free interchange of ideas and results with all other organizations in Indonesia that have interests and responsibilities related to energy. This would include the organizations represented on the Technical Committee of Energy Resources as well as

the Ministry of the Environment and possibly others. The liaison function should be formalized and specific individuals assigned the responsibility for its implementation.

5. Contribute to public dissemination of energy related data and the furtherance of informed dialogue on key energy issues

In addition to forging a strong link to other energy professionals, it is important to raise the consciousness of the lay public concerning the importance of energy research to Indonesia's future prosperity, and to describe the activities of the laboratory in this regard. A specific goal would be to develop educational programs to encourage energy-conserving behaviour.

SECTION II

ENERGY PLANNING GROUP

During the next fifty to one hundred years the world faces two overlapping energy supply transitions: one from the present dominant use of oil to an increasing dependence on coal, coal-derived liquids and gases and unconventional fossil fuels, and the other to a growing role for various solar and nuclear options. Whatever the source, it is clear that the real cost of energy will increase, so that methods of improving the efficiency of its use will also be of increasing importance. Although a large degree of global and regional coordination will be needed to effect these transitions smoothly, such efforts must build on country-specific energy technology assessments which take into account individual needs, uses, and resources.

In Indonesia, the PUSPIPTEK Energy Research Laboratory should play the leading role in planning for the increasing role of new energy sources and the efficient use of both new and traditional sources with due regard to environmental impacts and the particular needs of both the rural and the urban populations. Given the pivotal role that energy plays in society, it is both inevitable and proper that other organizations in Indonesia, both governmental and non-governmental, will also share some of the energy concerns of the Laboratory.

In carrying out the activities recommended below, it is assumed that the information systems, evaluation and planning, and resource assessment functions will be closely coordinated with activities of other Indonesian government entities in order to avoid unnecessary duplication. Of course, these functions would also be expected to be responsive to and coordinated with, the national energy policy. Further, the results of the assessments and evaluation studies would serve to guide the research and development activities of the Laboratory.

A. Recommended Activities

1. Establish an Energy Research Information System

The results of energy modelling studies which seek to determine how future energy demands can be met will be misleading without an accurate and complete data base. This would include the latest information on international energy research and development, as well as estimates of the renewable energy resource potential in Indonesia; e.g., biomass in all forms, wind and hydro. The Laboratory should collect, evaluate, process and store this class of data for easy access, and where deficiencies exist, it should commission country-wide or site-specific surveys. In addition, arrangements should be made with other information banks in Indonesia to provide ready access to other relevant data; e.g., basic geological information, the results of surveys of energy demand and consumption patterns, and measures of the health and environmental effects associated with energy production and use.

Energy information systems have been developed in the U.S. and other countries, and assistance from abroad should be sought in obtaining and modifying the required software and hardware for use in Indonesia. Local institutions and capabilities should also be used whenever possible.

2. Assess the possibilities for decreasing the level and changing the pattern of future fuel use in Indonesia by inter-fuel substitution, improved end-use efficiency in equipment and processes, and conservation, without adverse effect on economic growth and employment

This task will involve a variety of separate studies and assessments which are built on the knowledge of:

(a) the state of the art and projected trends in new energy production and conversion technologies; e.g., solar photovoltaic, coal liquefaction, geothermal and advanced nuclear.

(b) the associated resource base in Indonesia; e.g., quantity and quality of solar insolation, biomass, wind, and uranium resources.

Examples of such studies are:

(a) the relative merits of displacing oil for transport by coal liquefaction, conversion of natural gas to methanol, or energy plantations;

(b) the current economics and future trends in providing off-grid rural electrification by either diesel generation or by an integrated system involving a multiplicity of renewable resources; e.g., photovoltaics, solar ponds, and biogas digesters;

(c) whether smokeless coal derived from small mines in Java and/or local biomass should be developed to displace firewood and kerosene for rural needs;

(d) whether future base-load electrical capacity for Java should be provided by coal or nuclear energy;

(e) the potential fuel savings if cogeneration of electricity with process heat or steam is widely introduced in industry.

In performing these studies the members of the planning group will interact strongly with the relevant staff in the hardware-oriented groups in the Laboratory, other institutions in Indonesia, and if need be, will seek assistance from experts outside Indonesia, especially in the near term. However, after all basic data is collected and advice considered, the goal must be to produce <u>objective, independent assessments</u> as a guide to providing direction for the Laboratory's program.

3. <u>Develop the capability for taking institutional, social and environmental factors into account in energy planning</u>

Technical solutions to energy problems often have limited impact because of their failure to take into account the important institutional, environmental,

and social factors. For example, it will be necessary to have knowledge of:

(a) institutional barriers to linkage of local producers of cogenerated electricity with the central grid;

(b) social barriers to the efficient use of new energy sources and systems in rural areas; e.g., the use of night soil in biogas digesters;

(c) the effects of coal conversion operations on water quality and availability;

(d) the urban consumer response to electric rate reform and removing the subsidies on gasoline coupled with more efficient public transport.

The skills needed to carry out these tasks require training in: political science, social science, ecology and urban planning. While it is not necessary to have all these skills represented on the in-house staff, the staff should have funds to obtain advice in these areas as necessary.

B. Manpower Requirements and Immediate Tasks

Three or four senior people with a like number of junior people could form the nucleus of the planning staff; eventually it may be expanded to a size of 15-20. It is recommended that all members of the group be sent abroad in rotation to work at institutions with recognized expertise in the energy policy and assessment area for a period of 3 months to 2 years, depending on the available opportunities abroad and their program responsibilities in Indonesia. In the near term, it is recommended that a senior planner be sent to work for a year with a recognized planning group which has an academic affiliation; e.g., the Center for Energy Policy Research of the Energy Laboratory at the Massachusetts Institute of Technology, and another senior individual be sent to the U.S. for 3 months to become acquainted with the energy information systems which have been developed at a variety of institutions; e.g., the Argonne and Oak Ridge National Laboratories and the National Technical Information Service.

SECTION III

TRAINING AND EDUCATION

One of the most urgent tasks facing the new PUSPIPTEK Energy Research Laboratory (PERL) will be to obtain and develop an adequate number of trained scientists and engineers. Although there are technical personnel with appropriate scientific background in some of the universities and some of the research institutes, their number is small and it would cripple the work of these organizations if many of their staff were to join PERL. Thus, it will be necessary to provide training for most of the personnel in order to build up the technical staff of the Laboratory. Further, it will be necessary periodically to provide opportunities for advanced training abroad and attendance at regional and international meetings and conferences in order to keep the staff up-to-date with current advances in pertinent fields. The visiting Team suggests that a training and development program should include the following elements:

1. On-the-job training assignments abroad

To the extent possible, support should be provided for current senior staff members to participate in on-going research programs in the U.S. national laboratories or other suitable research centers. Such support would provide all travel and living costs for periods from 6-12 months. These appointments should begin as soon as possible on a rotating basis, and be continued as long as necessary but probably at least for the next five years.

Training assignments in the various areas such as biomass, solar energy, coal research, systems analyses and energy policy studies could be arranged through USAID and US DOE to suit the requirements of specific individuals.

2. Post-graduate scholarships in-country

A limited number of graduate scholarships providing all costs should be

granted annually on a country-wide competitive basis for graduate studies at suitable Indonesian universities such as ITB, IPB, ITS, Gajah Mada. Upon completion of the degree work, the graduates would be expected to work at PERL for at least 3 years for Masters degrees, and 5 years for PhD degrees.

3. Post-graduate scholarships abroad

A limited number of full (all costs) or partial (travel and living costs) graduate scholarships for either the MS or PhD degree abroad should be granted annually on a country-wide competitive basis for Indonesian university graduates. The "Universities Abroad" should include the Asian Institute of Technology and appropriate ASEAN universities as well as universities in developed countries. After receiving the degree, graduates would be expected to work at PERL for a length of time to be established.

4. Use of Consultants

In the early years while the Laboratory is supporting training assignments abroad, it would be advisable to consider the use of consultants from developed countries as short-term employees. Assignments on the order of a few months or more would be of enormous benefit in speeding the development of the various programs, as well as providing additional staff training in-country. The expertise so acquired would supplement the Laboratory's research and development capabilities in a major way.

Although not a function of the Energy Research Laboratory, the attainment in a reasonable time of the necessary numbers of trained personnel implies an immediate government commitment to upgrading the staff, facilities and equipment of Indonesian universities. It also implies a concerted effort to encourage greater interest and involvement in scientific and technical fields of study. Further, since the bulk of the world's technical literature and conferences is in English, proficiency in the English language should be a requirement for PERL staff members or candidates.

After a trained staff has been assembled and is pursuing an on-going research program, it is necessary that the staff members be provided opportunities to keep current on development in their respective fields in other parts of the world. It is recommended elsewhere that the best possible library, staffed by trained technical library staff, be assembled at PERL. While this is a necessity and will provide one means of keeping informed via the technical literature, it is also necessary to provide opportunities for at least the senior staff members to attend international or regional meetings, because it is at such meetings that valuable exchanges of information and views take place. Thus, means should be provided for a certain number of staff to attend annually the appropriate international scientific and technical conferences held abroad.

Other means of keeping the staff informed should also be considered. These include:

a. Weekly seminars--each week one staff member could report on the research he has in progress. This includes staff engaged in hardware, software and policy studies.

b. Visiting seminar speakers--these could be professors from universities, staff scientists from other institutions or staff from universities associated with various aspects of energy.

c. Visiting scientists from abroad--visiting scientists in Indonesia on other missions could be invited to give a seminar talk if their field is related in some way to the work of the Laboratory.

d. Lectures given by senior staff--senior staff members could give courses on site (at PERL) for the junior staff members in areas of interest to the missions of the Laboratory.

SECTION IV

COAL RESEARCH AND DEVELOPMENT

The nation of Indonesia is particularly fortunate in having large reserves of oil, gas, and coal. However, it is unfortunate that, as in the rest of the world, the reserves of oil are being depleted at a much greater rate than are the coal reserves. At present (1979 figures), 98 percent of Indonesia's domestic energy requirements are being supplied by oil and gas and less than one percent by coal. While oil will dominate the energy field for the next few decades, at the end of that time, Indonesia and much of the rest of the world will, of necessity, turn to coal as a major source of energy.

It is, thus, not too early to begin immediately to plan the coal research and development program for the PUSPIPTEK Energy Research Laboratory (PERL). There are several meaningful areas of coal research now being pursued and planned in Indonesia. Selected staff personnel should begin as soon as possible to survey the work now in progress at various research centers and, working closely with their personnel, decide and agree upon which of these projects could best be handled at PERL. The carbide, activated carbon, metallurgical coking work, etc. (see below) are candidates for such consideration. This procedure would also provide an excellent opportunity for personnel selection for the institute. Some of this work will be bench scale and could be moved fairly easily to PERL when and if deemed advisable. A program for a gasification "pilot plant" (see below) could also be developed during this planning stage and would, for

example, include evaluation of various Indonesian coals for suitability for the gasification process to be selected. Initially the design, construction and operation of a pilot plant gasifier would provide valuable experience, and new process research and testing of innovative ideas would be undertaken after the research personnel are thoroughly versed in the basics of coal processing and after smooth reliable operation of the pilot plant has been achieved.

Coal is, of course, most efficiently used in direct combustion. Indonesian coals, being low in sulfur and ash contents, can be burned directly in conventional furnaces without the need of the costly sulfur and ash removal equipment needed to satisfy the environmental regulations in the United States and other parts of the world.

Thus, the use of such new technologies as fluid-bed combustion do not appear urgent for Indonesia and hence research and development work in this area could have a low priority. The technical staff of the laboratory, however, will want to keep current with the literature and developments in this field, should circumstances change.

It is our understanding that it is the Government's policy to emphasize the use of coal for future thermal power generation plants in order to release additional oil production for export. In addition to this policy, however, consideration should be given, whenever practical, to retro-fitting

existing oil-fired power plants for coal-firing. Even the possible use of coal/oil mixtures should be considered as another means of reducing oil consumption. Some research and develpment in this area might be justified and necessary if existing technology is not directly applicable to the Indonesian situation.

Another area of study that could prove profitable relates to the substitution of coal or coal-derived gas for meeting refinery fuel requirements now satisfied with oil. It has been roughly estimated that this requires 15000 BPD of oil. Releasing this oil for export would realize over $100 million per year additional revenue.

The use of low-, medium-, or high-calorie gas derived from coal will assume great importance for Indonesia and for the world in the decades to come. Low and medium calorie gas can be used for local heating or for combined-cycle power plants. Medium calorie gas can be used as feedstock for methanol or ammonia plants, for combined-cycle power plants, or for making high calorie gas suitable for pipeline transmission. It also can furnish the synthesis gas for indirect coal liquefaction (SASOL process for example) and for the hydrogen required in direct coal liquefaction.

Several different coal gasification technologies are either currently available or in the process of development for commercialization. Because of the importance of coal gasification for Indonesia's future, it is

recommended that top priority in coal research be given to coal gasification. It is further recommended that this program be oriented toward building a small coal gasification "pilot plant", or process development unit (PDU), at PERL as soon as possible. The term PDU is used to mean a facility larger than bench scale, but less sophisticated than a U.S.-style pilot plant. What is intended is a unit versatile enough to study various gasification processes and large enough to be able to obtain useful data at the process level. It is visualized that this unit could be built in the U.S. at a cost of about $2 million, and possibly for less in Indonesia using local supplies where possible.

Liquefaction of coal to supply transportation fuel and to replace the domestic home use of kerosene can also be a significant part of the energy picture for Indonesia in the decades ahead. Coal can be liquefied by Indirect or Direct processes. Indirect Liquefaction involves gasifying coal with steam and oxygen to produce a synthesis gas (or syngas) mixture of carbon monoxide and hydrogen. These gases are then reacted with each other catalytically to produce a synthetic crude and a mixture of marketable chemicals. This is done in the SASOL process in South Africa. In a second indirect liquefaction process, the coal-derived syngas mixture can be used to produce methanol which is, of course, suitable as an automotive fuel or as a domestic fuel to replace kerosene.

Direct liquefaction processes involve raising the ratio of H/C (0.7/1) in solid coal to the point (2.0/1) where the coal becomes an oil. This

can be done by reacting the coal directly with hydrogen at elevated temperatures and pressures. Fairly recent research has resulted in the development of three promising direct liquefaction processes: the Solvent Refined Coal (SRC), H-Coal, and Donor Solvent processes.

Direct liquefaction is considered to be less expensive than the two-step indirect process, and because of this, two 6000-7000 tons per day demonstration plants using the SRC-I and SRC-II processes are currently being designed for construction in the U.S. Each will produce 18,000 to 20,000 barrels of oil equivalent per day.

Because of the importance of coal liquefaction, it is recommended that strong consideration be given to building at the appropriate time a second coal conversion "pilot plant" for studies of direct liquefaction. If subsequent developments in the energy and petrochemical field appears to justify it, then still later a second coal liquefaction plant could be built to study indirect liquefaction, following either the SASOL concept or the methanol synthesis.

One of the major constraints to fuller utilization of Indonesian coals appears to be the matter of coal transportation. Good work is being done in using belt conveyors in rugged terrain at Ombilin, but for longer distances, consideration could be given to the possibility of coal/water slurry pipelines. One such line has been carrying coal for several years for a distance of 275 miles to a power plant in the Southwestern U.S.

Some research time might profitably be spent on this interesting technology to determine its applicability to Indonesia. Pipelines for coal slurry transport up to over 1000 miles over mountainous terrain are being proposed in the U.S.

Another important phase of coal research in Indonesia should be directed toward development of means of making metallurgical coke from Indonesian coal--for both ferrous and non-ferrous metal production. This work, however, may probably be more appropriately placed in the Metallurgical Research Institute. In addition to providing for studies aimed toward the manufacture of metallurgical coke, other important areas of current research should not be neglected. Included in this would be continuation and extension of the work on calcium carbide manufacture, the production of smokeless fuels to replace wood and kerosene for domestic use, as well as the improvement of means of producing commercial activated carbon. These areas would provide opportunities for meaningful bench scale research studies.

In summary then, it is recommended that a coal gasification "pilot plant" be the focal point of the initial experimental activities. A direct coal liquefaction "pilot plant" should be the second unit, and later, possibly, an indirect liquefaction plant. Other research and development activities could relate to the conversion of oil-fired power plants, to coal or coal/oil mixtures, and to coal/water slurry transport.

Analytical laboratory equipment would, of course, be a requisite part of the pilot plant complex.

Personnel to manage, plan, operate the pilot units, do the chemical and physical analytical work, analyze the pilot plant data, etc. could level off at about 30 scientists and engineers and about 70 support personnel for construction, maintenance, clerical, and stenographic work.

It is recommended that the above discussed equipment and personnel be acquired during a 4 - 5 year period. This would allow the orderly development and orientation of the employees and a reasonable rate of equipment procurement and installation. An important part of personnel training would result from their participating in the planning, design, and construction of the pilot units as each is authorized.

Specific details of laboratory layout, equipment and cost for these coal research programs are given in Appendix A.

SECTION V

BIOMASS ENERGY PROGRAMS

I. INTRODUCTION

The use of biomass as a source of energy is not new. For millenia wood was the only source of energy that man was able to utilize for various purposes ranging from cooking or heating to smelting operations. Even today wood is being used extensively for such purposes. The renewed interest in biomass as a source of energy stems from the gradual depletion of fossil fuels, as well as the wood in forests, as a result of population increase, rapid industrialization, etc. Equally important is that it is a renewable source of energy, provided its cultivation and utilization are balanced or well managed.

Quite often Indonesia is referred to as the biomass paradise. The annual agricultural and forest residues in Indonesia amount to about 17 million metric tons. Rice hulls (5.7) constitute the largest residue, followed by bagasse (3.1), logging and sawmill wastes (2.5), coconut wastes (2.4), rubber wastes (1.9), and oilpalm wastes (1.5). Assuming that 330 liters of oil can be obtained from a ton of residue, the total residue corresponds to a theoretical maximum of about 35 million barrels of oil per year, in excess of current energy consumption in Indonesia. It is, of course, unrealistic to assume that every ounce of agricultural waste produced yearly can be collected and converted solely to oil. Nevertheless the potential of biomass residues as a source of energy is obvious.

Equally important is the potential of energy farms in Indonesia. The very mention of energy farms creates a concern about food supplies based on the anticipation that a significant amount of land must be set aside for energy crops at the expense of food crops. Such a concern is unwarranted as long as the energy derived from biomass is not intended for urban centers nor diverted to heavy industry not related to farming or food processing. Under these constraints the ratio of land required for energy crops to that of food crops would be less than one sixth.

Fundamental to developing sound biomass energy research and development programs, is the evaluation of available resources and the development of usable processes. To be successful, it is also necessary that these processes be culturally and socially acceptable and easy to construct, maintain, and use. In carrying out its technical programs, the Laboratory must also keep clearly in mind the non-technical aspects on which success or failure can hinge.

II. RECOMMENDED RESEARCH PROGRAMS

A. Assessment of Agricultural Residues

Although statistical information is available regarding the estimates of yearly crop and forest residues, the information is not sufficiently detailed to serve as a firm data base for estimating biomass residue reserves. The information must be quantitative regarding the amount, the moisture and ash content, size distribution of lots (e.g., it is not sufficient to classify as small or large), storage and spoilage characteristics, transportation options, distance to villages or food processing centers, etc.

It is recommended that a project be initiated by two agricultural engineers to obtain quantitative data regarding agricultural residues. Inasmuch as Institute Pertanian Bogor (IPB) is the leading educational institute for agriculture and has shown interest in biomass utilization, it would be advantageous for the PUSPIPTEK Energy Research Laboratory (PERL) and IPB to develop a working relationship whereby IPB could be provided with grants to undertake specific projects.

In addition, it is recommended that two scientists be assigned (one being an agricultural engineer) to initiate the necessary laboratory work associated with this project. The anticipated laboratory work would involve analytical determination of moisture content, ash content, calorific value, proximate and ultimate analyses peculiar to forest and crop residues, e.g. lignin, cellulose, sugar, starch, oil and latex contents. Information about the laboratory and equipment needs is given in Appendix B. The challenging aspects of this project concern:

1) Development of a methodology for resource estimation.
2) Determination of pertinent productivity parameters.
3) Establishment of viable procedures for residue collection, transportation and storage.
4) Selection of residue processing centers.

B. Development of Energy Farms

It is clear that energy farms in highly populated lands should be confined to marginal land and/or to land set aside for forest, watersheds, etc. for ecological reasons. This project involves the following tasks:

1) Selecting sites available for energy farming or energy forestry.

2) Identification of bioenergy crops and the productivity parameters of each crop.

3) Development of experimental plots for growth studies.

4) Assessment of techniques for planting, harvesting, transporting and storing.

5) Selection of bioenergy crop processing centers.

6) Selection of conversion technology.

This project is similar in nature to Project A and requires roughly similar expertise, and hence, could be implemented through a cooperative program with IPB. If two scientists (one botanist) are assigned to this Project it should speed the establishment of a bioenergy technology in Indonesia.

In fact, there already has been great interest shown in growing several crops for energy purposes. One project, already under study, is the growth of water hyacinth to produce methane via biodigestion. Another one concerns the growth of pedylanthus, an oil or latex bearing plant. The third one concerns the growth of sweet potatoes, rather than the sagova grown in Brazil, to produce ethanol via sugar fermentation and distillation. The current efforts should be pursued with greater intensity in order to be able to set a target date for resource availability if the related process development activities should progress to the point where building a test or demonstration facility would be desirable. Firm data on annual growth per hectare, nutrient and water requirement (if any), labor and land costs should be carefully collected. The various plants chosen for investigation

should be grown in suitable locations in lots of sufficient size for such data collection.

C. Evaluation of Basic Energy Requirements

It is obvious that a country must have a sufficiently large renewable biomass resource that can be utilized for conversion into energy in order to develop a genuine interest in the development of "biomass-to-energy techologies." Equally important, however, is the quantitative assessment of energy forms and utilization patterns. Such an assessment should guide the selection of conversion technology(ies). For this reason the importance of evaluating basic energy requirements cannot be overemphasized.

Energy for cooking demands (now either firewood or kerosene is used predominantly), rural electrification demands for food processing and other light industry (such as ceramic kilns, smelters etc.) are now the major concern. If marginal lands are used as energy farms, we may add the energy for pumping or irrigation requirements. Cooking, for example can be done by using firewood, charcoal, biogas, kerosene, or electricity. Besides environmental, safety and health considerations, the concern over how much land is required for a particular energy form may have much influence on the choice of conversion technology. Projects A and B examine the surces and availability of bioenergy. Project C examines where and in what final form the energy is needed. With guidance provided by results obtained in carrying out the projects, it becomes easier to develop a research development and demonstration (RD&D) program to establish a biomass conversion technology.

This project would be expected to be carried out by the Energy Planning Group, but is included in this section as an example of the close interdependence of the studies to be performed by that group, and the direction of the research programs. Two engineers should be sufficient for this study, at least in the early phases, and close coordination should be maintained with Projects A and B.

D. Research, Development, and Demonstration Investigations

This collection of projects will eventually constitute the core of the PERL biomass program. The future direction of these investigations will, of course, be influenced by the results obtained in at least the first two activities recommended above. Some of these investigations are already being pursued and support for them should be continued and expanded. The others should be initiated as soon as possible.

1. Char Production for Cooking. Such a program has been initiated at ITB with a grant from USAID. As we understand, the current project will eventually go through a demonstration stage at a plant where rice hulls will provide the energy requirements of the rice processing plant. We recommend that PERL follow this project:

a. by providing support for the demonstration stage, if needed; and,
b. by arranging the utilization of this technology for as many rice processing plants as possible, if the results of the demonstration efforts are encouraging and until a better technology is developed and proved.

2. Methane via Biomass Fermentation. This is an ongoing project in Indonesia with great promise. This activity appears to be confined to the uses of the water hyacinth. Whereas the cost and performance of a digester is very important to the viability of this bioenergy option in Indonesia, equally important is the determination of the amount of energy which can be produced per unit of land area. For this reason we attach great importance to Project B. Inasmuch as a 1,000 liter digester is available at the site of a pond where water hyacinth is grown, it is possible to combine the studies of growth potential with that of digestion rate potential. The advantages of a well coordinated multi-purpose project needs no elaboration.

Regarding digester design and performance, it has been brought to our attention that methane production rate falls off during the rainy season. This was attributed to the fact that the average air temperature during the rainy season is lower than in the dry season. This can be compensated for by burning a small portion of the product gas and pushing the hot gas through a coil immersed in the digester to maintain the proper temperature. It is clear that there is room for innovation in developing a biomass digestion technology specifically suited for Indonesia and other tropical countries. We recommend that this project be given a high priority and suitable support. A modest first goal might be to supply the cooling and electricity needs for the school situated at the water hyacinth research station.

3. Direct Combustion for Power or Electricity Generation.

This route was popular at the beginning of the 20th century but fell into disuse with discoveries of coal, oil and natural gas fields. However, it is not a lost technology. In the United States alone, the amount of power generated from logging, lumber and paper mill residues is estimated to be about two quads (2×10^{15} Btu/year). This corresponds to about 1 million barrels of oil per day, or 8 to 10% of the total crude consumption in the United States.

Utilization of wood waste by direct combustion techniques is well practiced by Georgia-Pacific, and this technology should be investigated for potential application in Indonesia.

4. Gasification of Biomass. Gasification of biomass is receiving a great deal of attention in the United States, and in the Scandinavian countries largely because cost estimates indicate that the gas produced will be cheaper per calorie than any other fuel that can be obtained from biomass, e.g., ethanol, methanol, oil, char, gasoline, etc. There are at least five institutions (Pacific Northwest Laboratories, Battelle-Columbus, Texas Tech. University, University of Missouri at Rolla, University of West Virginia) which are actively engaged in R & D activity in this field. Sweden and Finland are also engaged in building demonstration units. Our recommendation is that PERL assign at least one (preferably two) chemical engineer(s) to make a "State of the Art Study" in this field. Such a study by an Indonesian engineer or team could be conveniently conducted in the United States as part of an on the job training assignment. Whereas the intensity of the interest shown in gasification may indicate that it is a promising

avenue, the multiplicity of the efforts suggest that the ultimate path is not necessarily clear.

5. Direct Liquefaction of Biomass. Although the cost per calorie of oil produced by direct liquefaction of biomass is greater than that of gas produced from biomass (i.e. $6/million Btu vs $4/million Btu), storage and transportation considerations make oil more attractive than gas in many applications. In the United States there are a few institutions engaged in research on biomass liquefaction and there is a biomass liquefaction test facility (BLTF) located at Albany, Oregon (construction completed January 1977).

Recently biomass liquefaction received a great deal of attention because of moderate success achieved in developing a liquefaction process developed at the University of California, Berkeley. A "State of the Art in the United States Report" with particular emphasis on the LBL process is available. Our recommendation is that PERL assign two chemical engineers to make a "State of the Art Study" with particular emphasis on what should be done in Indonesia. Such a study may conveniently be conducted during an observation or training mission. We do not recommend that Indonesia build a BLTF unless special circumstances dictate.

6. Alcohol from Sugar of Starch Bearing Crops. Every credible economic feasibility study made in the United States indicates that, in terms of net calories, alcohols will be more expensive than the steam that can be produced by direct combustion, or the biogas that can be obtained by biomass gasification, or the oil that

can be synthesized by direct liquefaction of biomass. However, it would be unwise to dismiss any option of converting biomass to a synthetic fuel on the basis of economic feasibility studies made in another country where climatic conditions and labor and materials costs are radically different than those in the country under consideration. For this reason we recommend that Indonesian engineers make a critical state of the art study, preferably during a training mission in the United States, in order to chart the course of future activity in Indonesia.

7. Multi-purpose or Combinational Approaches. It is recognized that while producing char from biomass it is inevitable that some gas and tar are produced. Similarly, there is a byproduct of direct liquefaction processes. It is often possible to control the relative amounts of the byproducts to meet the market demands. Decisions in this regard can be made on the basis of market analysis and process cost analyses.

8. Direct Combustion for Household Use. Some work on the development of more efficient methods of direct combustion is already being done at IPB. This work, involving primarily more efficient stove design, could be expanded to include more efficient burning techniques, (chipping, etc.) and possibly more controlled burning techniques. It could also include the study of other potentially burnable biomass residues.

SECTION VI

DIRECT SOLAR CONVERSION PROGRAM

A. Introduction

This section deals with direct conversion of solar energy to heat or electricity and the technologies presently associated with these two conversion processes. It will not be concerned with the conversion of biomass into solid, liquid or gaseous fuels, except for the conversion of animal and human waste to methane.

Specific details of personnel resources, and equipment, materials, and costs for the recommended programs are given in Appendix C.

B. Recommended Programs

We have used several criteria in addition to the staff development as the basis for our recommendation.

- o Staff resources should not be expended in acquiring expertise or know-how in technologies which may become obsolete in a few years.
- o Projects should not be undertaken which require sophisticated and expensive equipment, or which require very extensive professional staff development before they can be initiated, or which are already being studied aggressively in the developed world.
- o Projects should lead as rapidly as possible to Indonesian production of energy or significant parts thereof.

1. Photovoltaic Program

Photovoltaics is a very rapidly evolving technology whose costs will drop significantly in the near future. Because the cost of electricity from diesel generators will rise with increasing fuel prices, photovoltaics may well serve as a source of electricity for Indonesia's rural electrification program. Thus, it is recommended that PERL undertake photovoltaic projects to develop staff capability in this area. However, the projects must be chosen carefully.

The production of photovoltaic cells involves relatively high technology which may change rapidly in the future. While practically all commercial cells available today are made from either single crystal or polycrystalline silicon, there is extensive research on other materials (amorphous silicon, gallium arsenide, cadmium sulfide and zinc phosphide for example) and on newer cell configurations (e.g. electrochemical cells) from which cells using much less basic material may be produced by continuous processing. It is quite possible that these newer developments will supplant silicon technology for large scale, low-cost photovoltaic production.

At the other end of the spectrum, photovoltaic applications will be essentially independent of the basic material of the cell or its configuration. As one moves through the spectrum from applications to the basic material technology there is a gradual increase in the probability that the technical basis for each step will become obsolete.

For these reasons, the photovoltaic program should stress first the application end of the spectrum to develop expertise in system design, treating the photovoltaic array as a black box with known input and output characteristics. This part of the program should concern itself with load-matching, power, conditioning and control, network design, and maintenance problems.

At the same time, the program should include projects for developing know-how and expertise to backstop a future photovoltaic industry in Indonesia. The question is how far toward the outer limit of the spectrum these projects should extend. This limit is dictated by present commercial practice.

Projects should include panel assembly from completed cells and performance and life tests on these panels. They should also include cell fabrication, but only starting from commercial silicon wafers. Ideally the fabrication should not include junction formation on the wafers, for this is a part of the cell technology which is very specific to silicon. However, as a practical matter it is not possible to purchase silicon wafers which have been processed only through junction formation and not beyond.

A final project should develop cell test facilities and the expertise to operate these facilities and interpret the results. A sophisticated solar simulator is not essential at this time. The facility should be such that it can give comparative tests from cell to cell rather than absolute characteristics.

The program should not concern itself with the technology for silicon production, purfication, single crystal growth, or ingot slicing into wafers, which are specific to silicon and may be irrelevant for a future photovoltaic industy in Indonesia.

Neither should the program study fundamental photoelectron interactions within the cell, nor the dynamic behavior of electrons and holes after excitation. These studies require sophisticated equipment and a professional competence achieved only after several years of basic studies and works in the field. These studies are being made by very competent professionals in the developed world. This Laboratory would always be in a catch-up mode in this area and could make no really significant contributions to it. Furthermore, such studies and the competence that would result from them are not necessary to nurture a photovoltaic industry in Indonesia.

2. Thermal Conversion Program

The technology for direct conversion of solar radiation into heat is less sophisticated than photovoltaic technology. It is based on the well-established sciences of thermodynamics, heat transfer and fluid flow. There is no need for basic research at PERL in these sciences, per se.

Rather, the program should concern itself with developing optimized conversion devices and systems for specific applications under Indonesian

conditions, and which use as much indigenous or locally produced material as is practical. Device optimization is the most critical aspect of the program. There has been a tendency to make solar devices essentially by intuition. While such devices may serve a short-term, limited function, they are generally wasteful of material resources. This waste is of no real consequence if only a few devices are produced, but it becomes intolerable if devices are produced on the large scale needed to make a significant impact on the energy technologies used in Indonesia.

It is important to stress that the program should be concerned with optimum design, not with the highest possible efficiency or the longest possible lifetime.

To be specific, it is recommended that the thermal program should be concerned, initially, with crop and fish drying, solar stills for water treatment, dessicant cooling systems and exploratory work in solar ponds.

The need for crop drying under controlled conditions is well recognized. The thermal group at PERL should collaborate in this project with people at IPB, who are experts in crop characteristics and the dynamics of crop drying, to develop optimized dryers for each crop. Concurrently, life tests on possible materials for construction should be conducted in different regions of Indonesia in collaboration with local universities.

Similar projects should be initiated for fish drying, also in collaboration with IPB.

Solar stills are fairly simple devices which can be used to upgrade the quality of potable water in rural areas. Projects to develop optimized stills are quite straightforward.

Recent work in Israel and elsewhere has indicated that salt gradient solar ponds can be a cost effective method for producing and storing heat which can then be used for different applications. Since ponds are relatively simple devices which can be constructed quite easily, it would be advantageous for PERL to develop expertise in this technology.

The rationale for dessicant cooling studies will be presented after we explain why we have not recommended the study of other thermal technologies at this time.

Projects for developing flat plate collectors for domestic hot water should not be undertaken unless an energy use survey for both urban and rural domestic hot water consumption demonstrates that there can be a significant saving of conventional fuel by going solar.

Similarly, work on concentrating collectors should not be started until there is ample evidence from more extensive insolation measurements around Indonesia that the diffuse component of the solar radiation is sufficiently low to make concentration feasible.

Unless concentration is feasible, little attention should be given to solar powered thermal engines. With the output temperatures available from flat plate collectors, the Carnot efficiency of a heat engine

can be no greater than about 14%. Practical system efficiencies based on these heat engines would be of the order of 2 to 3% at best.

There is a need for space cooling, primarily in urban areas and for icemaking and refrigeration in rural and fishing villages. It is attractive to look to solar powered refrigeration systems.

One possibility is to use a solar powered heat engine to drive an ordinary compressor system. However, from the previous discussion of these heat engines it follows that the efficiency of this approach would be very low.

A second possibility is the absorption refrigeration system in which the input heat to drive the system could be supplied by solar. However, these systems require input temperatures which can be achieved only by evacuated tube collectors--rather sophisticated and expensive devices--or concentrating collectors. In addition, they usually require cooling towers for the condenser and these would be rather ineffective in the high relative humidity of Indonesia.

A third system, which has shown promise in tests in hot humid areas such as Kuwait, is the dessicant cooling system in which the dessicant is either periodically or continuously regenerated with solar input. It is for this reason that we have recommended a dessicant cooling project.

3. Biodigester Program

While biodigesters are not usually considered direct solar conversion devices, this program is recommended here to ensure that it receives attention because it will be useful as a component for the rural energy center program which is already underway.

Emphasis in these studies should be directed toward developing a low cost system using local materials (the family scale digesters in the Peoples Republic of China, in which there are over 4.5 million in operation, cost approximately US$30 to construct). Studies should also be made of the optimum operating temperature for the devices, proper maintenance procedures, the most effective way to supply the input to the digester, and the overall system for using the methane produced.

4. Rural Energy Center Program

Depending upon the resources available, the energy needs of rural villages may well be supplied by a hybrid system which is a combination of renewable energy technologies.

Rural energy centers have several advantages. They make better use of all the available resources, they can produce a more uniform output, and they can be built as a unit, essentially in one enclosure, which can be operated and maintained by a few villagers given this responsibility.

For these centers to be cost effective, it is necessary that the mix of sources be tailored to the individual villages. In the proposed

program it is recommended that attention be given to the methodology for studying particular villages to determine the proper mix and control procedures for the different units, to interconnections between the units, and to the distribution network for the whole system.

Thought should also be given to including a central potable water supply (of treated water if necessary) in the energy enclosure.

APPENDIX A
Details of Laboratories, Equipment and Cost for Coal Research Program

Physical Equipment

The attached sketch, Attachment 1, indicates one manner in which the Coal Research facilities could be set up. The building would provide offices, analytical laboratories, and bench-scale research and control laboratories to support the pilot units. The unenclosed pilot plant area would provide for an ultimate maximum of four pilot units. Area A would accommodate the first to be built: a 5-10 ton per day coal gasification unit. It would be complete with the necessary coal storage area and grinding equipment; an oxygen supply system and the usual utilities supplying steam, electricity, and fuel gas. A more detailed description of the pilot plant facility is included as Attachment 2 along with an estimated total cost. Attachment 3 is a block diagram of some of the essential elements of the pilot plant.

The analytical and testing laboratory furnishings and equipment listed in Attachment 4 could be installed in a building space area of 3000 to 3600 square feet. The analytical work could be handled by three chemists and five technicians. Attachment 5 is a suggested layout for the laboratory.

No attempt has been made at estimating the cost of the building for the laboratory and for office space for research personnel, or for the locker-rooms, warehouse, etc. since both the assigned office space per man

and the construction costs must be done on a basis appropriate to Indonesian standards. It is strongly recommended that individual offices be provided for each research person, or at most that no more than two technical people be assigned to an office. The "bull-pen" or open-type of office accommodations for research scientists and engineers should be avoided since it lowers significantly the productivity and creativeness of the individual.

Personnel

The initial staff of about 24 technical people would include eight senior scientist and 16 junior level technical graduates. These should be selected as soon as possible so that they can participate in the planning and design activities as described later. It is anticipated that the level of 30 scientists and 70 support personnel be acquired by the end of 4 or 5 years, at which time construction of additional pilot plants would be considered and the research, development, and training programs would be expanded to their ultimate level of activity.

Procedure

It is suggested that as soon as possible an invitation be published to submit proposals for the planning, design, and construction of the coal research facilities. The proposal would provide that the initial staff work side by side actively participating on a full-time basis with the selected contractor's personnel in all stages of the pilot plant project from planning through to construction and initial operations. In this way the staff personnel will be thoroughly educated in pilot unit operations

and prepared for active research and development work and in the planning of new pilot units as required.

It is suggested that the bid invitation be submitted to those engineering and construction companies with proven records of achievement in coal conversion technology. This would include (but not be restricted to) such organizations as: Fluor, Bechtel, Parsons, Holt, Braun, Badger, Foster-Wheeler, etc. (addresses given in Attachment 6) to name a few. The essence of the contract should be active participation by the PERL personnel in the total pilot plant project from beginning to end, including planning, design, procurement, and installation of the analytical, test, and support laboratories.

ATTACHMENT 1.

A SUGGESTED PLOT PLAN

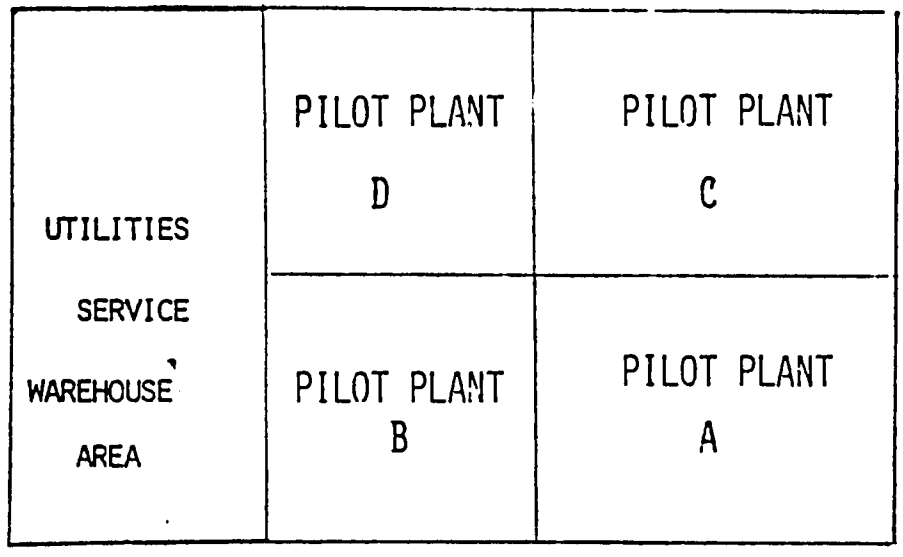

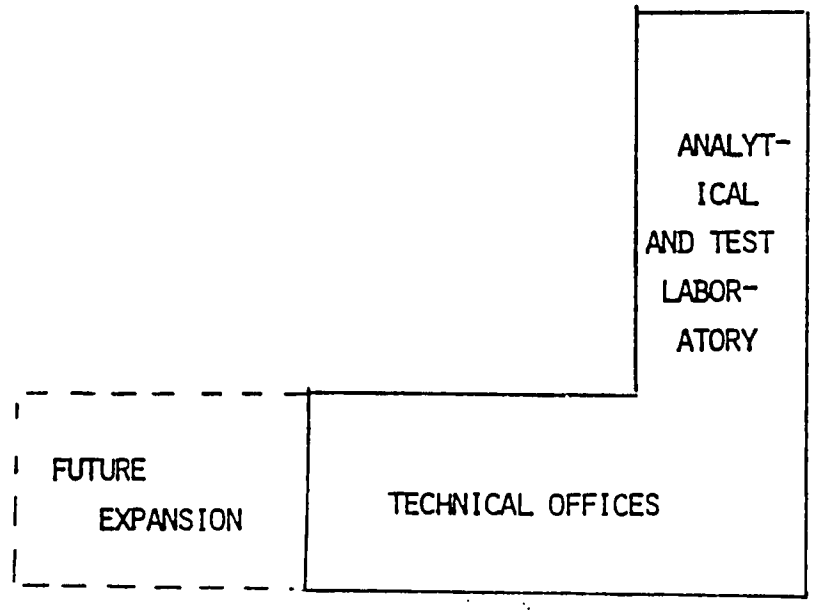

ATTACHMENT 2.

COAL GASIFICATION PILOT PLANT

Capacity--6 tons of coal per day (500 pounds per hour). Facility would include provision for unloading coal by truck into storage area, a crusher and a ball mill grinding system including a cyclone separator and bag-house filter. This would be followed by a pulverized coal storage bin. A gasifier could have either a dry feed or a slurry-feed system. The former would require pressurized lock-hoppers while the latter would require slurry preparation tanks and slurry charge pumps with agitated slurry holding tank. Provision for using either pure oxygen or pressurized air in the gasifier with coal and steam would be needed. The pressurized refractory-lined generator vessel would be equipped with a lock-hopper ash-receiving system. Downstream equipment would include a quench vessel, a venturi or other particulate removal device, a gas cooler, a high-pressure knock-out pot, recycle waterheater, flash tanks etc. for the carbon removal system. The original pilot plant would not need to include sulfur-removal, shift-conversion, or CO_2 removal. These elements could be added later as experience in running the basic gasifier plant is acquired. This plant could be built in the United States for an estimated $2.1 million, exclusive of utilities. This figure is based on 1979 $US.

About 50,000 to 60,000 square feet of land should be designated as the pilot plant area. This would accommodate the coal unloading, storage, crushing and grinding equipment, and three pilot units with their necessary utilities and services.

ATTACHMENT 3.

COAL GASIFICATION PILOT PLANT

BLOCK DIAGRAM SHOWING MAJOR COMPONENTS

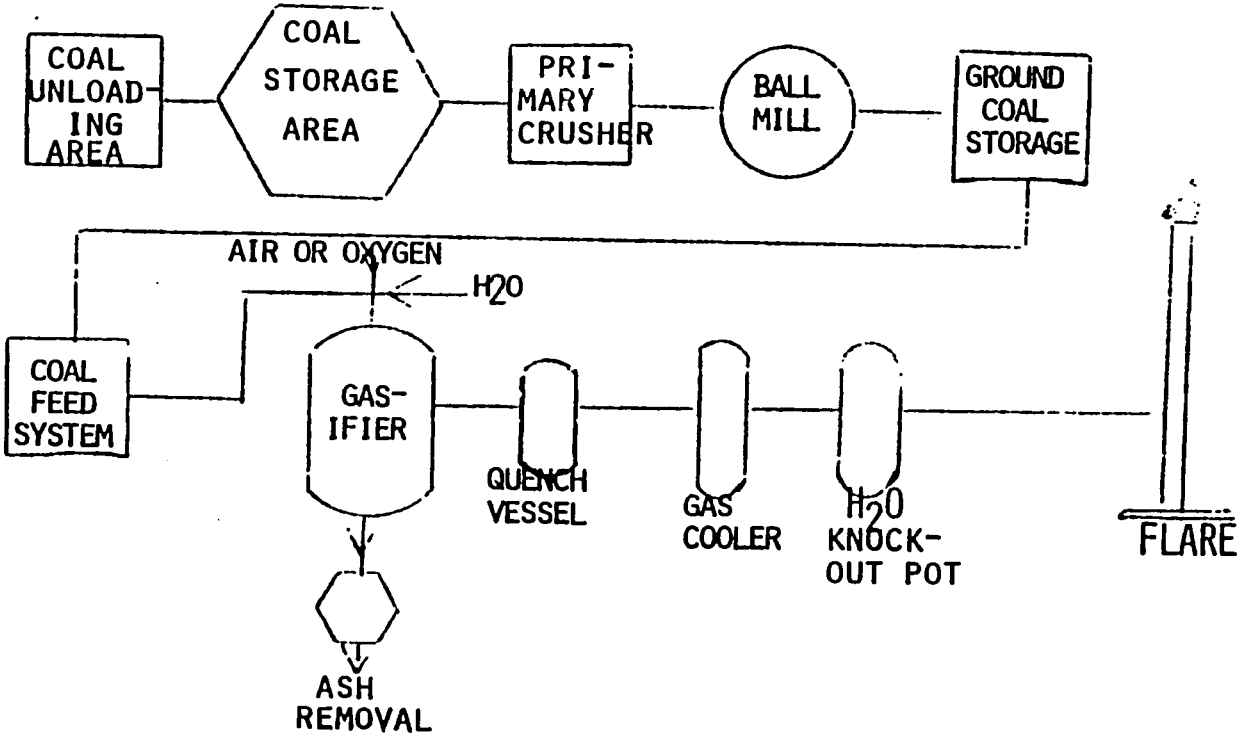

ATTACHMENT 4.

RECOMMENDED LABORATORY EQUIPMENT TO SUPPORT

SIX-TON PER DAY COAL GASIFICATION PILOT PLANT AT INERI

ASTM Distillation Unit.....$1100

pH Meter.....$350

Specific Ion Meter.....$1000

Electrodes for CN,S,NH_4Cl.....$400

Conductivity Meter.....$300

Dissolved Oxygen Meter.....$400

Optical Microscope.....$1500

C-H Analyzer.....$1500

Kjeldahl N Analyzer.....$500

Sulfur Analyzer.....LECO.....$10000 (instantaneous)
or EACHKA.....$400 (slow)

Calorimeter..... $3600

Ash Fusion Point Apparatus.....$1000

Atomic Absorption Ash Analyzer.....$25000

Gas Chromatograph Thermal Cond. $10000
Flame Ionization & Photomet.....$15000

GC Integrator-Calculator.....$7000

Dionex Ion Chromatograph.....$20000
(Anions and Cations in H2Oppm)

Centrifuges (1 small, 1 large).....$1400

Analytical Balance.....$2500

Vacuum Oven.....$500

Laboratory Oven.....$600

Muffle Furnace.....$800

Four Hot Plates.....$400

Three Magnetic Stirrers.....$450

Lab Ball Mill.....$300

ASTM Sieves (8-mesh to 325).....$400

Three Variac Heaters.....$360

Heating Mantles.....$300

Infra-Red Analyzer (Organic.....$15000
Composition of Coal Extracts)

Additional Equipment such as ringstands, burette stands, tongs, forceps, clamps, tubing, lab carts, dessicators, brushes, bunsen burners, mortars and pestles, etc. $2500

Beakers, flasks, graduated cylinders, separatory funnels, burettes, condensers, wash bottles, pipettes, crucibles, centrifuge tubes, thermometers, volumetric flasks, etc. $5000

Laboratory benches and usual furniture, two fume hoods, de-ionized water apparatus, utilities such as air, gas, vacuum, water, refrigerator for samples, dishwasher, balance table, titration stand, etc. $5000

The above-suggested equipment and laboratory furniture would cost approximately $125,000 or $135,000 depending on whether the EACHKA or the more expensive LECO sulfur analyzer were selected.

ATTACHMENT 5.

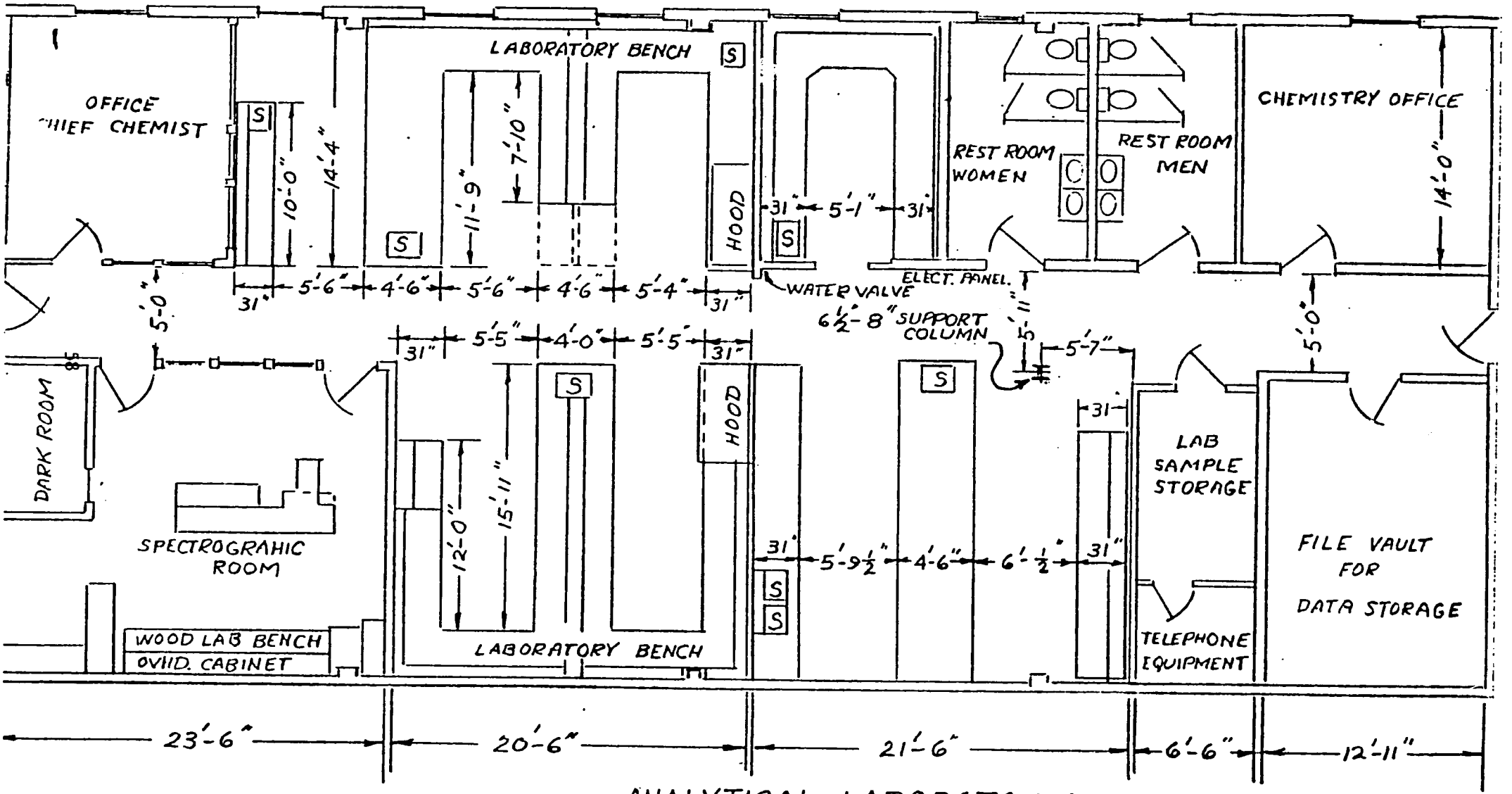

ANALYTICAL LABORATORY

ATTACHMENT 6

SUGGESTED ENGINEERING AND CONSTRUCTION COMPANIES

The Badger Company, One Broadway, Cambridge, MA 02142

Bechtel, 50 Beale St., San Francisco, CA 94119

Ben Holt Co., 201 S. Lake St., Pasadena, CA 91101

C. F. Braun & Co., Alhambra, CA 91802

Fluor Corp., 3333 Michelson Dr., Irvine, CA 92730

Foster-Wheeler Energy Corp., 110 S. Orange Ave.,
Livingston, NJ 07039

Ralph M. Parsons Co., 100 Walnut St., Pasadena, CA 91124

APPENDIX B

Details of Laboratories, Equipment and Costs for Biomass Energy Research Program

Three biomass processing laboratories are envisioned. The first to be completed should be an analytical laboratory capable of analyzing and characterizing various biomass materials and products. The second laboratory should be a batch equipment laboratory where biomass conversion options can be tested in batch experiments. The last laboratory to be put into operation should be a process evaluation laboratory which would be used to test promising biomass conversion processes in continuous bench scale equipment.

It is assumed that equipment procurement, installation, and shake down will begin simultaneously for all three laboratories and that the laboratories will be completely operating within two years after the buildings are completed.

This appendix is divided into two parts. In the first section each laboratory and the equipment to be used in it is described. The two-year laboratory equipment installation span is divided into four six month periods. Equipment to be installed in each laboratory in each semi-annual period is indicated. The second section deals with manpower and funding requirments. Procurement of equipment is expected to begin one year before the buildings are completed and extend over the two year installation period. The cost of personnel and laboratory buildings have not been included. Expenditure on equipment in each laboratory is also given by six month periods over the three year procurement period.

LABORATORIES AND EQUIPMENT

I. Analytical Laboratory

A. Building Facilities

Size: Rooms: 25 ft x 42 ft

Facilities: Power: 110 vac, single phase

Water:

Steam: @ 30 psig

Natural Gas: @ 100 psig delivery pressure

Air: @ 50 psig delivery pressure

Benches: Laboratory benches with chemical resistant tops; total length about 50 ft

B. Equipment

1st Six Month Period		Quantity
1.	Elemental analyzer for C, H, N, S and O analysis (Perkin-Elmer or equivalent)	1
2.	Research gas chromatograph with flame ionization and thermal conductivity detectors, temperature programmable, dual column and continuous integrator.	1
3.	Vacuum pumps	3
4.	Vacuum ovens with heating up to 300° C	2
5.	Air-draft oven with heating up to 300° C	1
6.	Analytical balance	1
7.	Top Loading balance	1

2nd Six Month Period		Quantity
1.	Bench top fume hoods	2
2.	Walk-in fume hood	1
3.	Soxhlet extractors with heating mantles	8
4.	Rotary vacuum evaporators	2
5.	Vacuum pumps	2
6.	Melting point, density, and viscosity apparatus (standard ASTM)	1 ea.
7.	Centrifuge	1
8.	Ph Meters	2
9.	Vapor pressure osmometer	1
10.	Brookfield viscometer	1
3rd Six Month Period		
1.	Standard ASTM distillation column	1
2.	High performance liquid chromatograph - with variable U.V. and visible spectrometer	1
3.	Oil bath heater and shaking mechanism for sample heating to 300° C	1

II. Batch Experiments Laboratory

A. Building Facilities

Size: One room 25 ft x 42 ft

Utilities: Power: 110 vac, single phase

Water:

Steam: @ 30 psig

Natural Gas: @ 100 psig delivery pressure

Air: @ 50 psig delivery

Benches: Laboratory benches with chemical resistant tops; total length about 30 ft

B. Equipment

1st Six Month Period		Quantity
1.	Bench tops fume hoods	3
2.	Walk-in fume hood	1
3.	Tubular bomb reactor with molten salt bath 1/2" x 6" tubes and vibrator (to be fabricated)	
4.	Laboratory glassware	-

2nd Six Month Period		
1.	300 ml Parr Instruments reactor (rated to 2,500 psig) with stirrer, heater and controller	1
2.	350 ml Autoclave Engineers Reactor with motor, stirrer, heater, and controller rated to 5,500 psig (SS316)	2
3.	Bomb calorimeter for heating value determination (Parr Instrument Co.)	4
4.	One gallon reactor with motor, stirrer, heater, and controller rated to 800 psig (Bench-scale Equipment Co.)	1

3rd Six Month Period		
1.	Pressure Transducers rated at 500, 1,000 and 3,000 psig	4 ea.
2.	Multipoint Recorders with input ranges for J & K Thermocouples, 4-20 mA and 1-5 volts	2
3.	Thermocouples and thermocouple selector switches, plugs and receptacles	several
4.	PID controllers for 110 V, with output of 4-20 mA and thermocouple input	2
5.	Zero angle fired controllers, with 4-20 mA input and 110 V 45 amp output	2
6.	Valves, tubing and fittings	-

		Quantity
7.	One liter Autoclave Engineers Reactor with stand, stirrer, heater and controller rated to 5,500 psig (SS316)	1
8.	One gallon Autoclave Engineers Reactor with stand, stirrer, heater, and controller rated to 3,500 psig (SS316)	1
9.	Pressure indicators	2
10.	Temperature indicators	2
11.	Valves, tubing and fittings	-

4th Six Month Period

1.	Gas analysis chromatograph with FID and TC detector and two columns from Carle Equipment Co.	1
2.	Silicone Oil Heating System with pump, immersion heaters (6), and double pipe heat exchangers (6) oil storage and dump tanks (2) valves and fittings. System to be fabricated from parts	1
3.	Wire mesh baskets for holding solid catalysts. To be fabricated	6
4.	Full scale plastic models of reactors for observing mixing and agitation	5
5.	Micro-combustion apparatus - made of quartz with gas collection and sampling ports, collection pots, and continuous weighing of feed cell	1
6.	Micro-pyrolysis apparatus - made of glass with tubular furnace. The pyrolysis cell would be connected to a vacuum line with sample collection ports and a mercury displacement (Toeppler) pump for gas volume measurement	1

III. Process Evaluation Laboratory

A. Building and Facilities

Size: One room, 40 x 50 ft floor area, 25 ft high

Utilities: Power, 110 VAC three phase. Water: Steam: @ 30 psig. delivery pressure

Natural Gas: @ 100 psig delivery pressure Air: @ 50 psig delivery pressure

Benches: Laboratory benches with chemical resistant tops; total length about 25 ft Work benches with wood tops; total length about 10 ft

B. Equipment

1st Six Month Period		Quantity
1.	Bench top fume hoods	2
2.	Glass-lined reactor with heater, stirrer, and controllers. 10 gallon capacity with an air or oxygen blower and gas sparging system	1
3.	Feed tanks 55 gallons with stirrer.	10
4.	Weigh scale with timer for periodic weight recording 800 lb capacity	3
5.	Product hold tanks, 55 gallons with stirrer and start up heaters and ventilation	10
6.	Recirculating pumps 15 gpm, positive displacement pumps (Monyo Pump Co.) with variable speed water and controller. Discharge pressure 150 psig, 316-type stainless steel	4
7.	Tubular heat exchanger, double pipe, 316-type stainless steel	6

2nd Six Month Period

1. Continuous bench-scale process evaluation unit with hot-air recirculation heater. This system would comprise: a) a high pressure reciprocating pump rated to 3,000 psig and 12 gph; b) a coiled tube reactor of one gallon capacity enclosed in a mild sheet steel annulus; c) a hot air (or nitrogen) recirculation system consisting of a blower and an electric heater together with flexible ducting; d) two pressure let-down vessels each of 2 gal. capacity and rated to 5,500 psig (Autoclave Engineers or Pressure Product Industries); e) two gas compressors, diaphram type (Withey); f) all associated valves and fitting including a pressure — 1

Quantity

let-down valve, four let-down pot selection and drain valves and various check and relief valves; g) all associated control equipment including a hot-air temperature controller, recirculation loop back pressure controller, gas flow rate measurement and control equipment (Brooks mass flow meter) pressure transducer and thermocouple read-out; heat tracing temperature controllers; exit gas flow controller; let-down pressure controller; dry gas meter.

The system would operate in a once-thru mode for both gas and feed. Product would be collected in one let-down vessel and then the next. The first let-down vessel would be drained while the second was being filled.

2. Center-feed vacuum distillation column including a heated feed tank, or reboiler, an overhead condenser, a 10 ft length of packed column, overhead and bottoms product collection pots, a cold trap system and a vacuum pump. The control system would include a solenoid valve for reflux proportioning, thermocouples at varous points and a reboiler heat input and temperature controller. 1

<u>3rd Six Month Period</u>

1. Electrical furnace heated reactor for continuous bench-scale process evaluation unit. The continuous process evaluation unit would be improved by adding to it an electrical furnace heated reactor. This reactor would consist of a coiled tube pre-heater placed in a box-type electric furnace and a tubular reactor consisting of four vertical sections of pipe. Each of the four sections would be heated by split-type electrical furnaces. The 1

Quantity

reactor would include thermocouples at various points, heater controllers and pressure relief valves. The system would be piped such that either the air-heater or the electrical furnace heated reactor could be used.

2. Gas recycle system for continous bench-scale process evaluation unit. The continous process evaluation unit would be further improved by adding a synthesis gas recycle loop. the off-gases from the let-down vessel would be recycled, mixed with make-up gas and fed to the reactor. The recycle loop would include an amine and light oil scrubber system. A recycle gas compressor, two high pressure gas scrubber vessels would need to be added together with associated piping and valves. 1

3. Continuous heterogeneous catalyst evaluation system for liquid and slurry feeds. This system would comprise: a) high pressure slurry feed pump; b) one liter autoclave reactor fitted with a catalyst basket; c) two one gallon pressure let-down vessels rated to 5,500 psig; d) two gas compressors, diaphram type; e) all associated valves and fittings including a pressure let-down valve, valves for let-down pot selection, drain valves and various check and relief valves; f) all associated control equipment including reactor heater temperature controller, slurry recirculation loop back pressure controller, gas flow rate measurement and control equipment, pressure and temperature indicators, heat tracing temperature controllers exit gas flow controller, let-down pressure controller and dry gas meter. The system would operate in a once-through mode for both liquid (or 1

Quantity

slurry) and gas feed. Product would be collected alternately in each of the two let-down vessels with the other vessel being drained.

4th Six Month Period

1. Incorporation of 'Berty' reactor into continuous heterogeneous catalyst evaluation system. The continuous heterogeneous catalyst evaluation system would be improved by adding a Berty reactor to it. The system would be piped so that either the catalyst basket reactor or the Berty reactor could be used. In addition to the Berty reactor an auxiliary gas compressor, reactor temperature indicator and controller and associated valves and fittings and piping would be added. 1

2. Continuous bench-scale pulping unit with refiner (Asplund Defibrator). This unit comes complete with system for feeding solid biomass, hydrolysis or pulping liquid injection, collection pot, screw feeder, and electric or steam jacketed heater and associated controls. 1

3. Fixed or fluidized bed gasifier. This unit would operate at atmospheric pressure. It would include a gas blower, a natural gas pilot system, a biomass feeder, two cyclones for solids separation and gas collection and analysis equipment. It is advised that this unit be designed and fabricated by an engineering firm and shipped ready for installation. 1

FINANCIAL AND MANPOWER REQUIREMENTS

Procurement of equipment is expected to begin one year before the buildings are completed and to continue until the end of the two year installation period. The funds needed for equipment in each six month period over this three year span are shown in Table I. The numbers are total requirements for all three laboratories and include the purchased cost of all items listed earlier. Transportation and delivery charges are not included.

The cost figures given are in terms of 1980 U.S. dollars. While they are based on our procurement experience, they must, nevertheless, be considered to be estimates only.

TABLE I: THREE-YEAR EXPENDITURES FOR PROPOSED LABORATORIES

PERIOD	COST (1980 U.S. $)
1st Year	
1st Six Months	400,000
2nd Six Months	850,000
2nd Year	
1st Six Months	350,000
2nd Six Months	400,000
3rd Year	
1st Six Months	420,000
2nd Six Months	120,000
TOTAL	$2,540,000

The manpower requirements for procurement, installation, and shake down of equipment are given in Table II. The manpower is broken into engineering and technical staff. Engineers would be involved in the selection and purchase of equipment. They would also make process and instrumentation drawings for various equipment, and supervise and help with the installation and commissioning of equipment. The technical staff would do all the piping and installation work.

It is assumed that up to four instrumentation engineers will be available for consultation on an 'as needed' basis. This instrumentation staff is not included in these aggregates.

TABLE II: THREE-YEAR MANPOWER REQUIREMENTS FOR PROPOSED LABORATORIES

PERIOD	SCIENTISTS/ENGINEERS	TECHNICIANS
1st Year		
1st Six Months	4	2
2nd Six Months	6	2
2nd Year		
1st Six Months	8	8
2nd Six Months	8	14
3rd Year		
1st Six Months	8	14
2nd Six Months	8	14
TOTAL	42	54

APPENDIX C
Details of Personnel, Laboratories, Equipment and Cost for Solar Program

A. RESOURCES

1. Professional Staff - 30*

Senior Scientists or Engineers - 6

- Overall program director
- Manager for photovoltaic devices
- Manager for power engineering
- Manager for thermal program
- Manager for biodigester program
- Manager for rural energy center program

2. Junior Staff - 24

Photovoltaics	10
Thermal conversion	7
Biodigesters	3
Rural energy centers	4

3. Space Requirements

Offices	250 m^2
Laboratories	400 m^2

- Roof of the building should be available for deploying and testing solar hardware and systems.
- Fenced-in field for solar pond tests 20 x 20 meters.

* This staff should come from the present BPP Teknologi solar group.

B. SOLAR LABORATORY DETAILS

I. Phototovoltaic Laboratory

A. Cell and Module Processing

It is assumed that the process will only be carried back to the junction diffusion stage, not to the materials preparation and wafer production. The process will start with the purchase of Boron doped wafers. At the same time, to enable the Laboratory to carry on Steps 2 and 3 in parallel with Step 1, it is also recommended that wafers with the junctions already processed be purchased.

Step 1

Diffusion p-type - by means of diffusion furnace, 3" wafers in $POCl_3$

Equipment & Materials Needed	Possible Source	Est. Cost
1. Diffusion Furnace 4 Tubes 76 mm. (3") Capability	Tempress Thermco Corso-Gray	$ 60K
2. Doped (Boron) Wafers (76 mm.) 1,000 @ $5 each	Applied Solar Energy Corp. Motorola Arco Solar Solarex	$ 5K
3. Gases & Chemicals	(Assume local supply)	$ 10K
4. Characterization Equipment Resistivity 4 Point Probe	K&S Tencor	$ 15K
Microscopes C-V System	Bausch & Lomb Princeton Applied Research Hewlett-Packard	$ 10K
P-N Meter	Solid State Measurement, Inc. Tencor Veeco Keithley	$ 3K

Step 2

Metallization

Two methods are suggested: 1) Screen printed which has potential for low cost in manufacturing; and 2) evaporated thin film which is versatile

Equipment & Materials Needed	Possible Source	Est. Cost
1. Screen Printer	AMI-Pressco Welltek	$ 12K
2. Inks and Supplies	AMI-Pressco DuPont	$ 5K
3. Infrared Furnace	Radiant Technology Inc.	$ 15K
4. Thin Film Evaporator	Veeco Varian Edwards	$ 15K
5. Supplies and Materials (Acids, chemicals, metals)	Local	$ 10K
6. Thickness Probe	Dektak Sloan Tencor Alpha Step	$ 15K
7. Solder Pots, Solder, Flux	Kester	$ 2K
8. Doping/AR spinner	Headway Rsch. Inc.	$ 7K
9. Junction Diffused Wafers 1000 @ $10 per wafer	See Step 1-2	$ 10K

Step 3

Encapsulation and Testing

Equipment & Materials Needed	Possible Source	Est. Cost
1. Solar Simulator	Oriel Xenon Corp Spectrolab	$ 12K
2. Electronic Load	Spectrolab	$ 5K
3. X-Y Recorder	Hewlett-Packard	$ 3K
4. Materials (Wire, Encapsulant, Glass, Frames)	Local Dow Corning (for encapsulant)	$ 10K
5. Pottant Dispensers	Hull Corp.	$ 10K

6.	Vacuum Equipment	Scientific Products Company	$ 10K
7.	Curing Oven	Scientific Products Company	$ 10K
	Grand Total		$ 250K

It is assumed that completed modules will be tested outdoors on the roof of the building.

This processing procedure will produce 3" diameter cells with 12% efficiency at 0.5V and 0.547 watts/cell.

The module will consist of 60 cells to give 15 volt output and 33 watts.

B. Photovoltaic Systems

This will be standard electrical engineering and electronics experimental set-ups. Thus no detailed equipment list is needed here. But it is highly recommended that all systems applications be at the dc level to minimize power conditioning. Commercial dc refrigerators, T.V.s, etc., are becoming available.

II. Solar Thermal Laboratory

A. Crop Dryer Studies

Equipment & Materials	Possible Source	Est. Cost
1. 24 Channel, 10" Strip Chart Recorder, 0-100°C	Leeds & Northrup	$2400
2. Millivolt Recorder, 0-50 mV Range 15 Channel	Leeds & Northrup	$2400
3. 5,000 Ft, 24 Gauge, Type T Copper Constantan with Nylon over Nylon Insulation	Leeds & Northrup	$ 600
4. Thermocouple Junction Tool for Use on 22-24-30 Gauge Wire	Leeds & Northrup	$ 200
5. Numatron for Thermocouple Output	Leeds & Northrup	$ 465
6. Pushbutton Selector Switch for Numatron	Leeds & Northrup	$ 190
7. Pyrometer, Eppley Model 848	Eppley Labs	$ 600

8.	Pyrheliometer Model NIP	Eppley Labs	$ 900
9.	Two Recorders for Eppley Instruments 6 1/2 Strip Chart @ $1760	Leeds & Northrup	$3520
10.	Two Integrators for Eppley Instruments @ $700	Leeds & Northrup	$1400
11.	Event Recorder Model 292-4	Rustrak	$ 165
12.	Air Flow Instruments 3 Model 2000, Range 0-.5" WC 3 Model 2000, Range 0-3.0" WC @ $30	Magnehelic	$ 180
13.	Two Manometer Air Units Range .1-1" WC @ $40		$ 80
		Total	$13100

B. Domestic Hot Water

Equipment & Materials		Possible Source	Est. Cost
1.	Four Flowmeters @ $80	Dwyer	$ 320
2.	Storage Tanks	Local	?

This list is to indicate type of equipmet and order of magnitude of cost for initial purchase. If more detailed ordering information is needed, it can be supplied.

Space: As specified in the report.