PD-AAN-035
ISN 20907

9310831/62

SPECIAL REPORT

EVALUATION OF LOW-COST EXTRUSION COOKERS FOR USE IN LDC'S

Departments of Agricultural and Chemical Engineering
and Food Science and Nutrition
Colorado State University
Fort Collins, Colorado 80523

July, 1978

LEC REPORT 5

LEC REPORT PUBLICATIONS

No. 1. Low-cost Extrusion Cookers, International Workshop Proceedings, June 2-5, 1976

No. 2. Evaluation of Low-cost Extrusion Cookers for Use in LDC's, (Annual Report 1977) April 1977

No. 3. Evaluation of Low-cost Extrusion Cookers in Sri Lanka, (Special Report) July 1977

No. 4. Evaluation of Low-cost Extrusion Cookers for Use in LDC's, (Annual Report 1978) July 1978

No. 5. Mechanical Evaluation of Brady Crop Cooker #206, (Special Report) July 1978

No. 6. Evaluation of Low-cost Extrusion Cookers for Use in LDC's, (Annual Report 1979) July 1979

No. 7. Low-cost Extrusion Cookers Second International Workshop Proceedings, January 15-18, 1979

No. 8. Effect of Extrusion on Calorie Density of Cereal and Cereal/Legume Blends, (Special Report) May 1980

Publications available from:

Department of Agricultural and Chemical Engineering
Colorado State University
Fort Collins, Colorado 80523

Reprinted January 1981

SPECIAL REPORT

Mechanical Evaluation of Brady Crop Cooker #206

by

J. L. Smith
J. D. Kellerby
R. E. Tribelhorn

Departments of Agricultural and Chemical Engineering
and Food Science and Nutrition
Colorado State University
Fort Collins, Colorado 80523

July, 1978

Published by:

Colorado State University

Fort Collins, Colorado 80523

This publication was made possible by a cooperative agreement, #12-17-07-8-1725-X, between Colorado State University and the U.S. Department of Agriculture, Office of International Cooperation and Development, with funding provided by the Agency for International Development, Office of Nutrition.

Special Report

Departments of Agricultural and Chemical Engineering

and Food Science and Nutrition

Colorado State University

Mechanical Evaluation of Brady Crop Cooker #206

Reported by: J. L. Smith
R. E. Tribelhorn
J. D. Kellerby

INTRODUCTION

The purpose of this report is to discuss the durability and reliability of the Brady Crop Cooker #206. In actual use, the Brady cooker has clearly demonstrated its capability to produce the kind and quality of products desired. However, several questions have been raised concerning its suitability and adaptability for continuous operation.

The Brady is one component of a materials handling and processing system. Reliability and maintenance requirements of the Brady must therefore be considered in view of similar criteria for other components which are also commonly used in the system. To secure needed data, a survey was conducted of manufacturers and suppliers of various components. Information on the useful life, maintenance and repair costs were obtained, and are discussed in the last section of this report.

Obviously, any machine can have infinite life if preventative and required maintenance are performed when needed, and the costs are economically and/or legally justified. A classic example of this situation in the

commercial airliner. In a more practical sense, however, repairs, maintenance, etc., must be considered in terms of costs, expected economic life and timeliness required for functional performance of the machine. In other words, the costs of maintaining an operational machine must be considered in terms of its cost per unit output or pound of product produced, the value added to the product, and the cost of not having the process available for certain time periods. Data contained in the survey section of this report can be used to estimate operating and maintenance costs for extruders and related equipment.

From the maintenance point of view, durability and reliability and/or the life of the machine are considered in three categories. They are:

1. Routine or preventative maintenance.--This normally includes lubrication and minor adjustments to components for wear. It is usually done by the machine operator every few hours.
2. Minor overhaul.--This includes cleaning, replacement of expendable parts and adjustments for wear. This is usually done by the machine operator or a mechanic at 1,000 to 2,000 hour intervals.
3. Major overhaul.--This includes complete disassembly and replacement of major components including bearings. It is usually performed by a skilled mechanic at 10,000 hour or greater intervals.

Most engineers consider routine maintenance the most critical of the above three categories. It is normally performed by a person having limited skills, and who may, due to boredom or for other reasons, not perform required tasks unless closely supervised. Therefore, any machine modification that can be made to reduce routine maintenance is usually cost effective.

The durability of a machine must also be considered in terms of its intended purpose and the user community. This particular point explains the present design and maintenance schedule for the Brady cooker. For example, the Brady was designed for use on an American farm. In this application, the Brady would be operated by an individual who was very familiar with machinery and extremely conscious of the need for routine maintenance. Further, the operator would also be the owner in most situations. Another feature, in this regard, is that the Brady would seldom be run for more than a few hours; i.e., three or four since this is actual time available between the farmer's meals. Routine maintenance would be performed each time the machine was operated.

In summary, the Brady cooker, as with any machine, can be made to have an infinite life. The important point, however, is to consider the specific application for the machine, and determine a reasonable time interval for specific maintenance or minor modifications that can be made to reduce maintenance. In the judgment of the authors, reasonable maintenance for use of the Brady cooker to process food products in developing countries would be as follows:

1. Routine maintenance.--Routine maintenance should be eliminated or reduced. Automatic lubrication should be provided, if possible.
2. Minor overhaul.--Minor overhaul should be limited to thorough cleaning, tightening of all bolts and clamping devices and possibly resurfacing of wear surfaces such as the screw. This maintenance should be accomplished at intervals of 1,500 to 2,000 hours.
3. Major overhaul.--Major overhaul should be accomplished at intervals of approximately 10,000 hours. The machine should be completely disassembled, major components, such as the screw, cone and bearings, should be replaced if required.

LOW-COST COOKER EXTRUDER DESIGN

Cooker-extruders are relatively simple machines. They consist of a power train, barrel, screw, die, feed mechanism and control mechanism. Design details of each of these components are discussed in the following section along with recommendations for minor modifications, where applicable.

The analysis can be divided into two general categories. First, there are modifications which should be made of the machine for all potential uses. These include hardening of the screw flights, selection of different material for the cone and the changes in the hydraulic system. The second category includes parts or components that could be improved with minor modifications and would thereby improve the reliability of the machine for use in developing countries. These include the following:

1. Eliminate all 1/2-inch bolts to prevent an accidental replacement with 13-mm bolts.
2. Redesign or eliminate the hydraulic system and replace with alternative conveyors and an alternative feed mechanism.
3. Redesign the bearing and bearing housing weldment. This modification will facilitate improved or automatic lubrication.
4. Provide a safety device to prevent damage to the machine if plugging occurs.
5. Relocate components in the drive train to reduce loads on universal joints.
6. Replace the temperature measuring device and add a temperature sensor in the screw feed section to detect impending plugging.
7. Redesign the frame.

It must be emphasized that the suggested modifications are relatively minor and inexpensive. If all suggested changes were made, cost of the machine would increase no more than a few hundred dollars. This would be more than offset by reduced maintenance and increased reliability.

DISCUSSION OF SUGGESTED MODIFICATIONS

Hardness of Wear Surfaces

Wear surfaces on the screw were checked for hardness using a Rockwell "C" test device. Several hardness tests were made along the axial length of the screw at locations on both the helix and root as shown in Figure 1. Tests were conducted on both a new rotor and a rotor with approximately 150 hours of use. Average values are summarized in Table 1.

Table 1. Rotor Hardness

Rotor	Root Hardness	Helix Hardness
New	16.2	32.6
Old	21.0	42.7

Specifications for surface conditions and their correlation to the Rockwell scale are given below.

Moderate abrasion - Severe impact		Rc 44-50c
Severe abrasion - Moderate impact		Rc 58-60c
Severe abrasion - Moderate impact		Rc 63-68c

A comparison of the measured values of Table 1 with the above data indicated that the factory-built screw was too soft to fit into the classification of moderate abrasion. In order for the extruder screw to have a 1,500-2,000 hour life as stated earlier, it was decided that a severe abrasion-moderate impact hardness would be necessary (Rc 58 or higher). Tests in Sri Lanka, extruding CSB-type products, indicated that a rotor rebuilt with a Rc 60 hard-surface welding rod lasted several thousand hours.

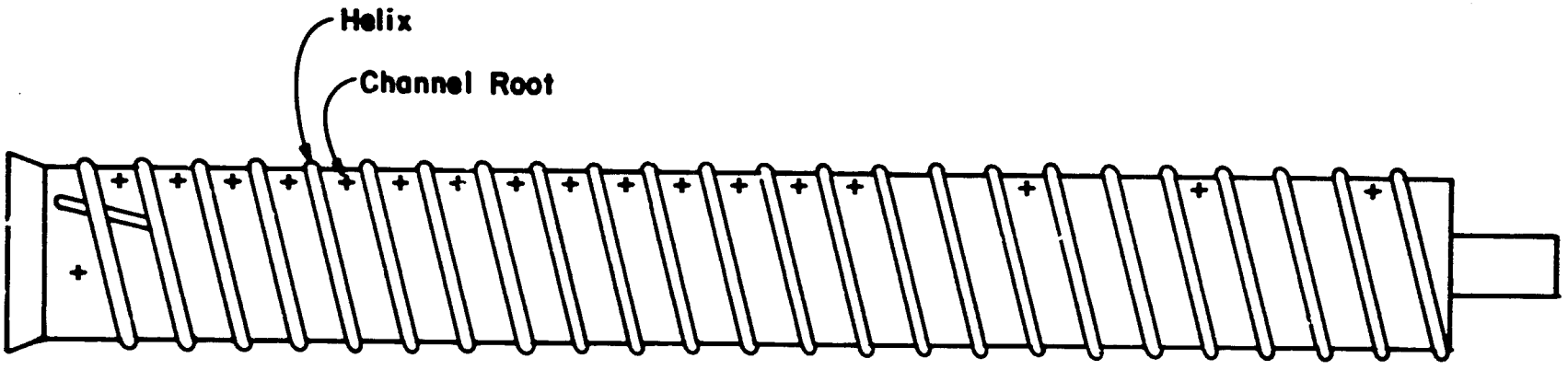

Figure 1. Brady sc :w rotor, showing the helix and channel root locations at which hardness tests were ma

Two extruder cones were also examined for hardness: one cone with a minimum of 100 hours, and one with a minimum of 5 hours. Tests locations are shown in Figure 2 and results are given in Table 2.

Table 2. Cone Hardness

Point number	New cone Rc no.	Old cone Rc no.
1	59	51
2	59	48
3	58	47
4	55	54
5	62	45
6	64	44
7	49	32
8	45	41
9	60	43
10	58	41
11	60	24
12	60	28
Ave.	57.5	41.5

Comparison of the results indicated that the cone annealed with time due to long term heat exposure. Since resistance to wear is directly related to the hardness of the material, the annealing affect caused an acceleration of wear with time.

The solution to the problem of insufficient surface hardness would be proper material selection and treatment at the time of manufacturing. A higher alloy steel such as 4140 or 4350 could be selected. Special hardening techniques could be used if a greater surface hardness was required.

Hydraulics of Brady

The hydraulic system of the Brady was designed for use in areas where external power is not available (other than diesel engine or farm tractor).

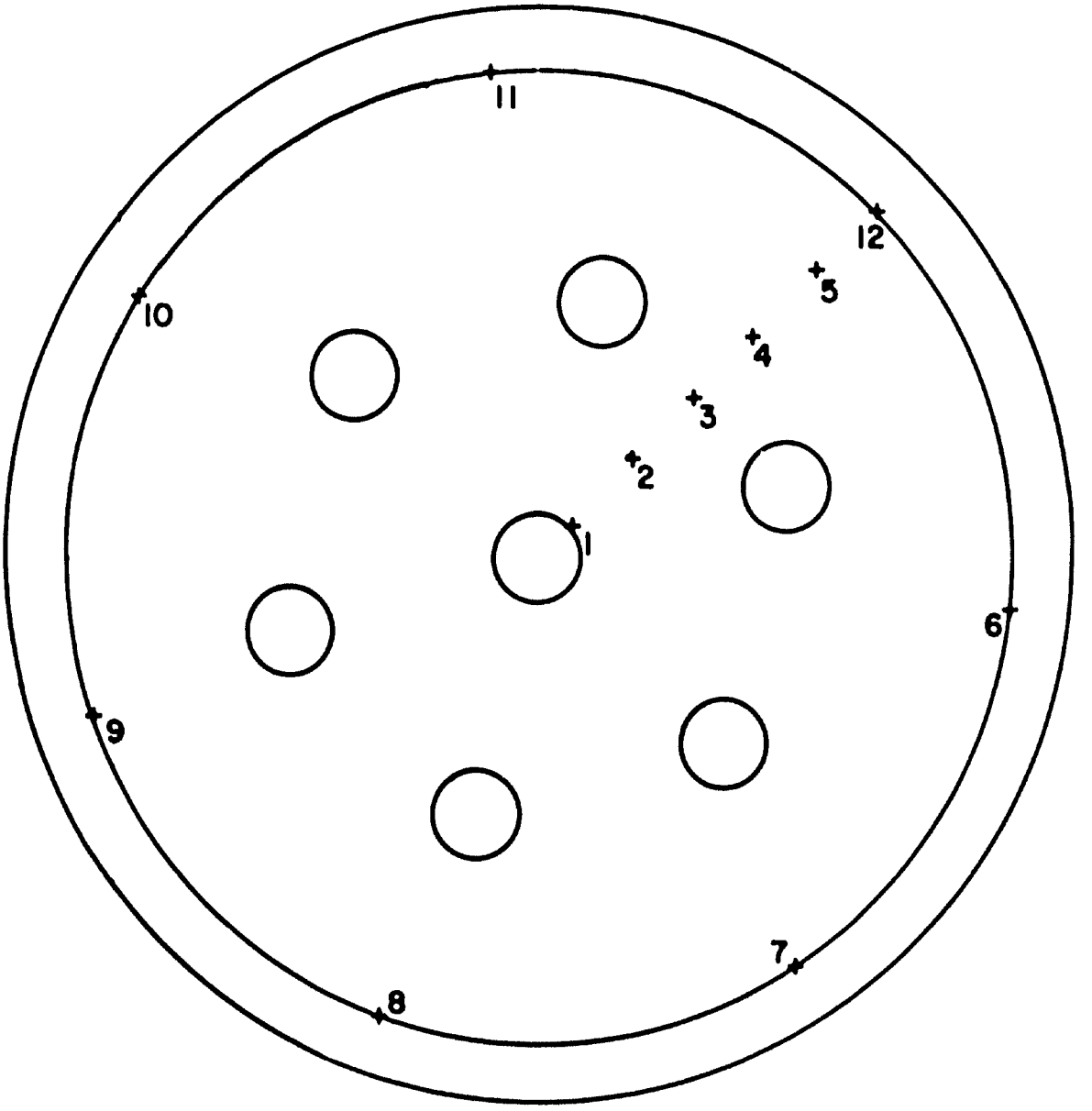

Figure 2. Vertex end view of the extruder cone, showing the hardness test locations from the center bolt hole to the small perimeter of the cone surface.

Hydraulics are used to power three components:

1. Output auger
2. Injector auger
3. Hopper feed auger.

When using the Brady for remote demonstration sites, all three components are useful due to the lack of other facilities. Conversely, the only component needed for in-plant use is the injector auger which feeds the extruder screw.

The hydraulic system on the Brady has several items requiring modification.

1. The output auger is coupled to the system by quick disconnects. Incorrect uncoupling could cause fluid contamination which would accelerate the wear of all components.
2. The flow control valve (controlling the injector auger) is oversized for the application resulting in low sensitivity. The valve can be opened to a marking of 10 on the control panel; however, maximum flow is reached at the number 3 on the panel.
3. The hydraulic circuit should be redesigned to incorporate a priority valve to divide flow between the feed and output auger motors. This would provide hydraulic fluid at full system pressure to both motors, thereby assuring more continuous operation under varying loads. The priority flow would be directed to the output motor. In this mode, flow would be directed to the output auger motor at the expense of flow to the feed auger in extreme load situations.
4. The components were selected for intermittent duty. The pump and motor should be replaced with components rated for continuous operation.

It would be beneficial to eliminate the hydraulic system completely for a continuous operation. This could be accomplished by substituting an electrical

vibratory feeder for the present injector auger. A new hopper would also have to be designed to accommodate the vibratory feeder. This design change would have a secondary beneficial effect on the operation of the extruder. That is, transition plugging could be easily overcome by making the transition between hopper and screw accessible for manual cleaning with a pliable tool.

Bearing Housing Weldment

The bearing housing weldment is the total support for the rotor on the Brady. The bearing must be capable of withstanding radial loads and resisting the maximum thrust load applied by the screw during operation. Current life expectancy for the weldment is approximately 1,500 hours prior to a major overhaul. A direct comparison can be made with other extrusion equipment in the last section of this report where bearing life expectancy is generally the life of the extruder.

The bearing housing was designed so the lubrication point does not permit adequate application to the front bearing (which is subjected to heat during extrusion). For this reason, an additional grease passage was drilled into the housing so that adequate lubrication could be provided to the bearing. The modification is shown in Figure 3.

Other modifications that could be made to this assembly are to replace present bearings with heavier duty bearings and/or install an automatic lubrication system. These changes may require other modifications to the machine because of space limitations.

Replacing the present bearings with heavier duty bearings would be limited by space in the present housing. Heavier duty bearings would require more internal space to support and house them than is available in the present housing.

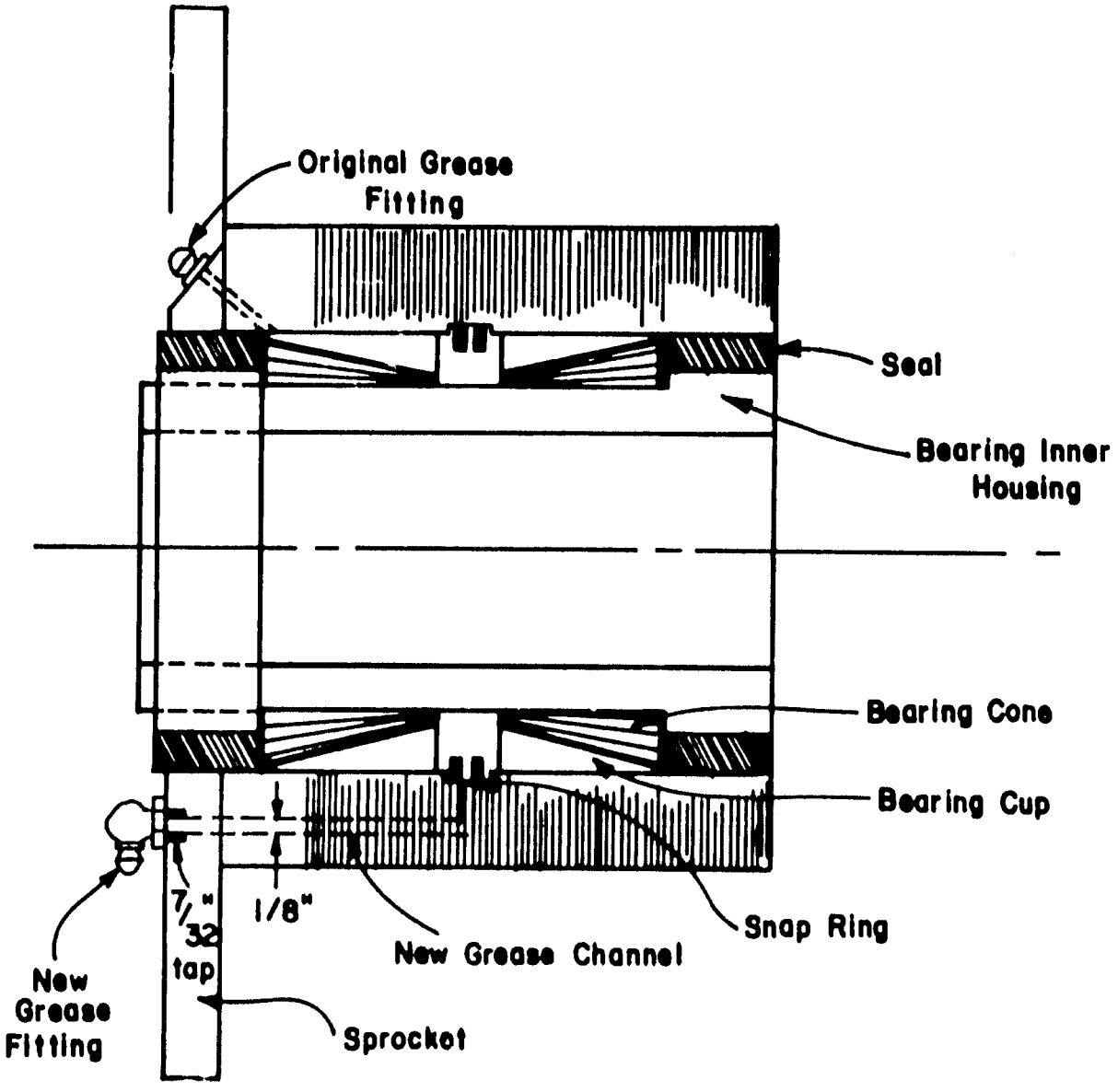

Figure 3. Brady extruder front bearing, showing the new grease channel and fitting added as a modification.

Automatic lubricators are pressure operated systems with control circuits that can be adjusted to lubricate specific points at selected intervals. Automatic lubrication is impossible with current design, as the weldment must be rotated to adjust the discharge orifice opening. Modification or removal of the front panel of the cowling may also be necessary for automatic lubrication. The present bearing housing design with modification of the front bearing for lubrication and regular maintenance is a reasonable compromise. However, redesign of the housing to accommodate heavier bearings and automatic lubrication would probably be cost effective for continuous operation in developing nations.

Cone Bolts

The present design utilizes 1/2 inch, Grade 5 machine bolts to attach the cone to the rotor. These bolts have adequate strength; however, they physically resemble 13-mm bolts and accidental use of a 13-mm bolt would damage the threads in the rotor. The problem can be remedied by increasing the bolt size to 9/16 inch, a size which does not have a metric equivalent.

Drive System

The drive train supplied with the Brady consists of one double universal PTO shaft designed to carry a maximum of 100 hp at 540 rpm or 150 hp at 1,000 rpm. The shaft was designed for agricultural applications where the machine runs intermittently and maintenance is performed between runs.

Disadvantages of the present drive train are listed below.

1. The universal joints cannot be automatically lubricated during operation.
2. The universal joints are susceptible to continuous and peak loadings which reduce the life of the bearings in them.
3. A safety device to protect the extruder from excessive loadings is not included in the drive train.

Two immediate changes which could be made are:

1. Interchange the double universal PTO shaft and gear reduction unit in the drive train sequence.
2. Replace the double universal PTO shaft with a heavier duty shaft.

Replacing the PTO shaft to incorporate heavier components has been investigated. However, this method is costly and does not provide overload protection.

Interchanging the PTO shaft and gear reduction unit offers a potential solution. In the present drive train, illustrated in Figure 4, the speed is reduced with a corresponding increase in torque before the power is delivered to the PTO drive shaft. Wear of components is primarily related to torque; therefore, interchanging the location of the drive shaft and gear reduction units would, by increasing rotational speed and reducing torque, reduce wear. In the proposed design, the gear reduction would become a part of the Brady as shown in Figure 5. Although this solution does not incorporate a safety device, the rapid fall-off of torque with speed reduction provides a built-in safety feature. It would also be possible to attach the motor to the gear reduction unit using a flexible coupling. This would reduce space requirements and eliminate the PTO. However, more precise location of the motor relative to the gear box would be required.

A safety device could be added by attaching the gear reduction to the Brady as described previously, and connecting the engine drive shaft to the reduction unit with a multiple "V" belt drive. This modification is shown in Figure 6. The "V" belts would provide a built-in safety feature due to their tendency to slip at high torques.

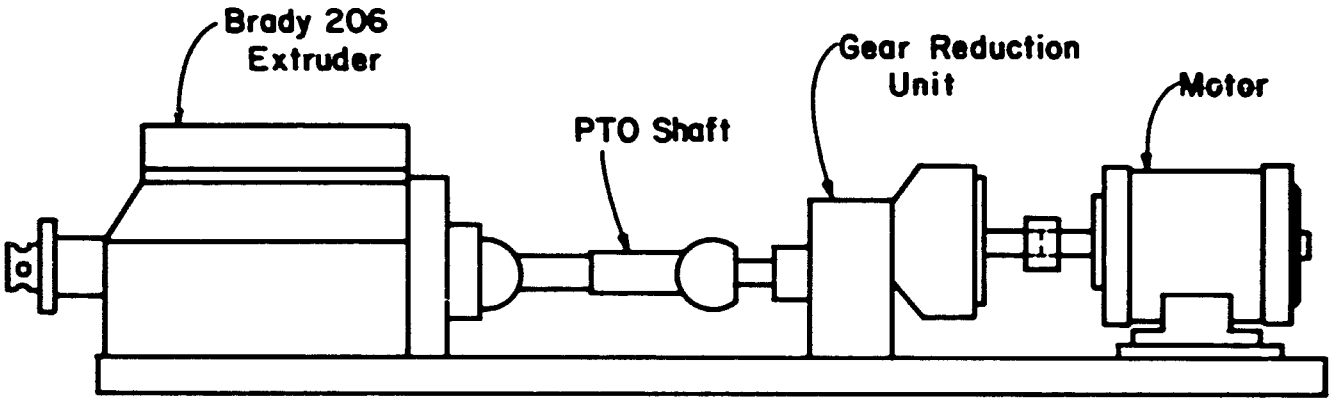

Figure 4. Drive train used with Brady 206 extruder in current installations.

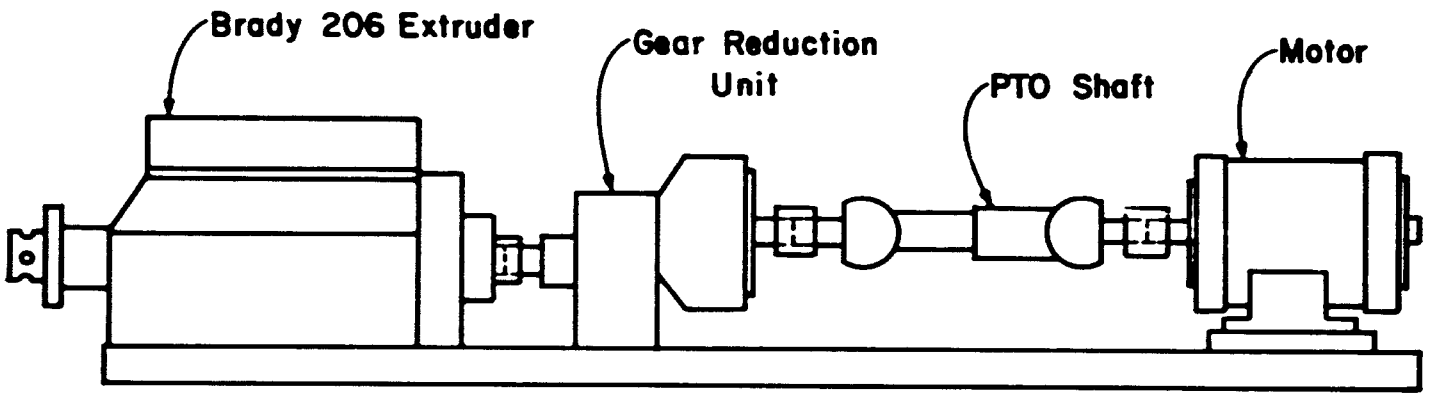

Figure 5. Drive train for Brady 206 extruder with gear reduction unit installed at the input to the extruder.

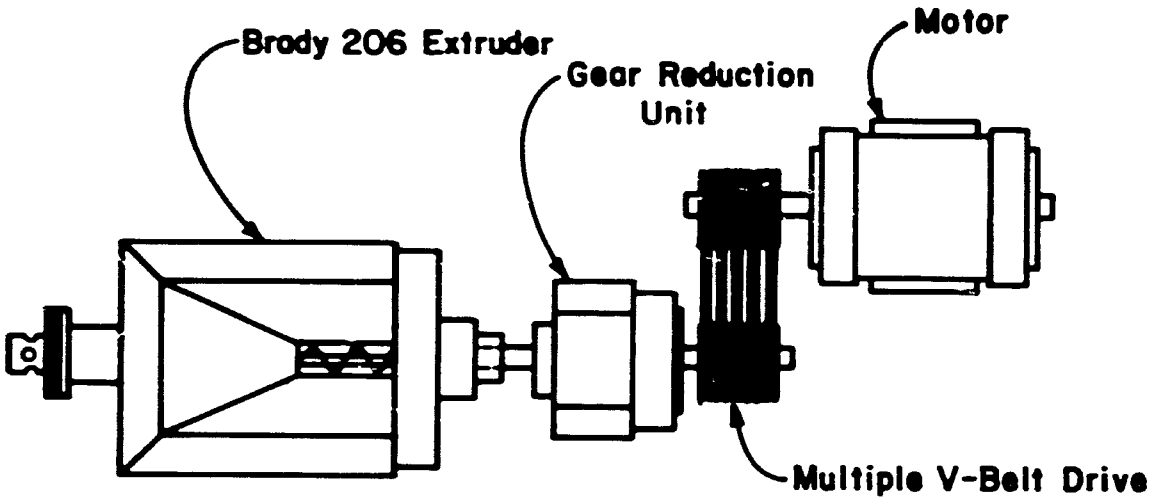

Figure 6. Drive train for Brady 206 extruder with a multiple V-belt arrangement used to transmit power to the gear reduction unit at the input to the extruder.

Temperature Sensors

A capillary-type temperature probe and gauge is furnished with the Brady. There are several problems associated with this gauge.

1. The gauge does not have capability to read above 325°F.
2. The sensitivity of the gauge is low and considerable lag time occurs between adjustment of the extruder and changes in the gauge reading.
3. Accuracy is low.

A surface-type thermometer has been used to overcome some of the problems mentioned above. Although this sensor has sufficient accuracy, foreign material lodges in the sensor coils with time, causing erroneous readings.

Two solutions can be considered:

1. Thermocouples.
2. A more durable thermometer.

A standard bimetallic thermometer would be an improvement, however, the location of the sensor on the barrel is critical. If not placed properly, the temperatures would be read incorrectly.

A copper-constantan thermocouple with sensing device could be installed at minimal cost. High sensitivity and accuracy would be possible, thus reducing operational problems.

The temperature sensor should be retained in the feed section of the screw. Location of a temperature sensor in this region allows detection of impending plugging and permits stopping the flow of input material or the extruder before it becomes plugged. The sensor could be connected to an alarm system to alert the operator and/or directly to the controls

on the power source to automatically stop operation. A standard bimetallic thermometer would be suitable for the detector system sensor.

Frame

Aesthetically, the Brady could be improved with more rigid framework to support the extruder in a manner similar to more expensive models. Use of larger structural members would provide a sturdier supporting framework, easier installation, and give the appearance of a more durable machine.

Design Summary

Various components crucial to continuous operation of the Brady have been examined. Without minor alternations, the Brady is not suitable for continuous operation. The required components can be altered simply to make the extruder suitable for continuous operation; however, some changes would require revision of the current machine.

In summary, the main factors which limit capability of the Brady to operate continuously are lubrication, bearings and the bearing housing weldment. By altering the lubrication and with regular routine maintenance, the Brady could be expected to perform satisfactorily in continuous operation.

The following modifications, although not required, are recommended for future development of the Brady low-cost extrusion cooker.

1. The complete cowling should be removed from the machine, and a special hopper designed to accommodate a vibratory feeder. This would eliminate the hydraulics.
2. The bearing housing weldment should be redesigned to accommodate heavier bearings and the automatic lubrication and the rotor. Modification of the method of orifice adjustment could also then

be reviewed. The purpose of the later modification would be to provide finer adjustment than is currently possible and wider orifice opening to facilitate cleaning. These suggestions are not related to durability.

3. The drive train should include a multiple "V" belt to transmit power from the engine drive shaft to the gear reduction unit. The reduction unit should be coupled directly to the Brady. The multiple "V" belt would absorb shock loading transmitted from the extruder and could be designed to provide overload protection.
4. Temperature sensors should be replaced with more reliable components and/or added to detect impending plugging.

SURVEY OF LEC SYSTEM COMPONENTS

Manufacturers and users were surveyed to determine reasonable estimates of equipment reliability and maintenance costs. The survey included all components that are or could be used in a LEC system. Components included in the survey were:

1. Bucket elevators
2. Screw conveyors
3. Belt conveyors
4. Feeders
5. Vibratory screens
6. Decordicators
7. Extruders
8. Milling machines
9. Dust collectors
10. Blenders

Selection of manufacturers was based on the reputation of their equipment. Emphasis was placed on manufacturers who produce continuous duty type equipment, but the survey included a broad spectrum of equipment quality. Manufacturers and users selected were asked to respond to the following questions based on 24-hour, continuous operation of their equipment.

1. What is the expected useful life of the equipment?
2. What time period will be machine operate before a major overhaul is required?
3. What would be the cost of a major overhaul as a percentage of capital cost?
4. What are the annual maintenance costs as a part of capital costs?

All responses were carefully examined to insure that reasonable values were obtained from the analysis. The following guidelines were used:

1. Any response of "infinite" was discarded as unrealistic.
2. Extremely low responses were discarded based on experience.
3. Average values were weighted more heavily to reflect a group of similar responses.

Average results of the survey are shown in Table 3 along with the range of responses. The large variation reflected in the range of responses was expected due to the sample selected.

Experience with and/or projections from LEC systems in current use are compared with average survey values in Table 4. In most cases, the LEC equipment is near the average value, and falls within the range of values given in Table 3. The major exception is the low-cost Brady extruder Model #206.

Table 3. Survey Summary of Manufacturers Contacted Regarding Equipment Durability

Equipment item	Number of responses	Normal life expectancy*, yrs.			Time for major overhaul, yrs.			Cost of major overhaul, % capital invest.			Annual maint. cost, % capital costs		
		Min.	Max.	Wt. Ave.	Min.	Max.	Wt. Ave.	Min.	Max.	Wt. Ave.	Min.	Max.	Wt. Ave.
Bucket elevators	3	20	∞	20	5	8	5	15	35	30	2	10	5
Screw conveyors	8	5	25	10	5	25	10	20	50	50	5	16	10
Belt conveyors	7	10	25	10	1	4	2	20	80	40	1	25	5
Feeders													
a. Vibratory	2	15	∞	15	3	15	10	NR	NR	10	5	5	5
b. Screw	3	18	∞	30	2	10	10	10	10	20	1	10	10
Vibratory screens (grain cleaners)	5	8	50	15	5	10	5	20	100	30	5	10	5
Decordicators	3	15	30	20	5	5	5	15	50	15	2.5	20	10
Extruders	7	10	∞	10	1	2	1	10	33	25	5	100	40
Milling													
a. Pin	3	20	50	40	2	50	5	10	50	15	3	5	10
b. Hammer	5	10	50	15	1	10	5	4	40	20	5	10	16
Dust collectors (pulsing bag filters)	3	15	20	15	15	20	15	100	100	100+	1	5	2
Blenders (horizontal batch mixer)	4	20	30	20	20	30	20	60	100	100	2	5	5

*24 hour continuous operation

Table 4. Comparison of LEC System with Manufacturers' Estimate

Equipment item	Normal life expectancy* yrs.		Time for major overhaul, yrs.		Cost of major overhaul, % capital invest.		Annual maint. cost, % capital costs	
	Survey	LEP**	Survey	LEP**	Survey	LEP**	Survey	LEP**
Bucket elevators	20	25	5	8	30	30	5	5
Screw conveyors	10	5	10	5	50	50	10	5
Belt conveyors	10	10	2	2	40	50	5	5
Feeders								
a. Vibratory	15	15	10	15	10	10	5	5
b. Screw	30	40	10	10	20	20	10	10
Vibratory screens	15	20	5	5	30	25	5	5
Decordicators	20	15	5	5	15	15	10	2.5
Extruders	10	5	1	1	25	33	40	60
Milling								
a. Pin	40	40	5	2	15	10	5	3
b. Hammer	15	10	5	10	20	40	10	10
Dust collector (pulsing bag)	15	15	15	15	100	100	2	2
Blender (horizontal batch mixer)	20	25	20	25	100	70	5	5

*24 hour continuous operation

**LEP = low-cost extrusion plant

The LEC, Brady Model #206, compares more favorably with industrial models based on actual annual costs per ton of capacity. These are shown in Table 5 along with values obtained from the survey. Both extruder types have similar annual maintenance costs, but the LEC has a much lower initial cost. It must be noted, however, that the percentage of down time and the cost of down time is not included in the analysis. Increased down time would increase maintenance costs per ton of output. On the basis of the available information and survey data, it can be concluded that the LEC is more appropriate than the industrial type for the proposed uses to manufacture low-cost nutritious foods in developing countries. Minor modifications of the LEC, as discussed previously, should result in additional cost savings and further increase its reliability. The purpose of those suggestions was to reduce maintenance costs and reduce down time. It is the opinion of the authors that the few hundred dollars in capital cost required for the modifications would be more than compensated by reduced maintenance costs.

Table 5. Comparison of the Brady Extruder and an Industrial Extruder

Criteria	Extruder	
	Low-cost	Industrial
Initial cost (US$)	10,000	80,000
Capacity (tons/hr)	0.5	1.5
Life (years)	5	10
Major overhaul period (years)	1.3	2
Approximate cost of overhaul (US$)	1,125	14,000
Approximate annual maintenance (US$)	2,400	3,000
Approximate maintenance cost over 10 years (US$)	32,600	100,000
Approximate average yearly cost (US$)	3,260	10,000
Approximate average yearly cost (US$/ton capacity)	6,530	6,600