5220139/53

DRAFT FOR COMMENTS
5/29/81

PD-AAJ-769

Evaluation of

USAID Honduras Agricultural Research Project
No. 522-0139

with

The National Agricultural Research Program

Evaluation
of
USAID Honduras Agricultural Research Project
with
the National Agricultural Research Program

SUMMARY

The purpose of this evaluation is to study the present situation of PNIA's multidisciplinary on-farm research, assess the progress made to date, and recommend how the funds remaing in the AID grant can be best utilized during the remaining two years of the project. A total of approximately 100 working days were applied to the evaluation by a six man interdisciplinary team. Over 80 documents were reviewed, 75 people were interviewed (including 20 farmer research collaborators), and three of the seven regions were visited. A meeting chaired by the PNIA director, was held with the regional coordinators and heads of the commodity projects. The team members were able to attend most of the sessions of the annual PNIA reunion held in La Esperanza from April 20th - 24th, 1981.

I. ISSUES

Organizational Structure

An analysis of the organizational structure in which PNIA functions reveals that there are two lines of authority reaching the investigators working in the decentralized regional offices. Both lines of authority originate from the minister. One line goes to the regional directors and then to the regional research coordinators. The other line goes first to the director general of agricultural operations, and then to the director of PNIA who deals directly with the regional research coordinators. In theory, the director of PNIA provides technical direction, while the regional directors provide executive direction. In practice, however, the regional directors control their respective research programs and are able to redirect activities as they see fit. The result is a less efficient national research program. Continuity in research is often interrupted, commodity projects that extend over more than one region are implemented differently, national policies are applied with a regional bias, and national priorities are changed to meet regional needs.

There is no simple solution to this problem. Better PNIA planning--integrated with both short and long range regional plans--will help. Improved communication between the National Director and the regional directors and between the regional research coordinators and their respective regional directors is essential. This also holds for the heads of the national commodity programs in their relationship with the regional directors where commodity testing is taking place.

Administrative Problems

A no less serious problem, however, is the low priority given to research. The research budget is only 2.5 per cent of the Ministry's budget, while that of extension is 20 per cent. Further, the problem of disbursements for the program is related to the small size of the research budget. Delays in disbursing funds for operation expenses can completely frustrate a research effort which must act in sunchronization with the farming cycle. At the present time, many PNIA staff members have not yet had their contracts for 1981 renewed. Others have not been reimbursed for travel and per diem since July 1980. This is a grave situation which not only impedes efficiency but demoralizes staff. A quick solution to this problem is imperative or PNIA will suffer the loss of many of its most qualified people and the continuity of on-going research project.

II. RESULTS

Research Priorities of PNIA

The research progress of the PNIA can best be understood by reviewing the specific research goals for each commodity program and the long range continuity of the research effort toward those established priorities. This evaluation measures the general effectiveness of the total program, even though it was not possible to analyze the entire number of experiments conducted on-farm.

During the last three years, the PNIA has addressed the research priorities for the basic grains listed in Table 1. The measurable products of PNIA technology generation take the form of new crop varieties with high yield potential, which have been released by the commodity programs for national distribution, and more localized technical recommendations for planting dates, fertilization, and pest control. There have been significant advances in both areas.

High Impact Technology

Improved crop varieties represent a long-term investment of component research into a single product that has the potential for greatly increasing farm production, on-farm employment, farm incomes, and national production in a relatively short period of time. Although appearing very simple on the surface, the development of an improved variety possessing favorable characteristics such as a shorter plant height to prevent lodging, disease resistence, a crystalline grain endosperm to prevent post-harvest storage losses, and an earlier maturation period to expand its adaptability into regions with limited rainfall, requires many cycles of selection and genetic manipulation. Previous research models geared to developing crop varieties which yield well under ideal agro-ecological conditions have given way to newer on-farm testing research models which assure regional adaptation and farmer acceptance.

In this respect, PNIA commodity programs have produced several varieties which have a high impact potential due in part to their higher yield potential (Table 2) and in part to their resistence to diseases and plant lodging. In addition to the development of new varieties, PNIA commodity programs have improved the plant characteristics of existing commercial varieties. The best examples of this are the successes in increasing husk length in the maize variety Hondureña Planta Baja and reducing the plant height of the variety Sintetico Tuxpeño. The commodity programs are also studying traditional varieties such as the bean varieties Cuarteño and Cincuenteño and the Sorghum variety Peloton. Many of the short season ICTA maize varieties also show great promise for the drier regions of the country and for double-cropping maize in regions with adequate soil moisture during the postrera season.

Research on Potential Problems

Agricultural research is inherently a dynamic process. New forms of diseases, climatic changes, and insect epidemics require research technicians to constantly look ahead. In 1979 a serious outbreak of Babosa (Vaginulus plebeius) in the major bean producing regions of the country caused a significant decrease in bean production and a consequent increase in bean prices throughout the country. Experimental data on the chemical control of Babosa using the insecticide Cytrolane (mefosflan) have consistently shown positive results. Studies on the refinement of doses and application techniques are rapidly leading to general technical recommendation for Babosa control.

A similar situation exists with Downy Mildew (Cenicilla) Sclerospora sorghi in maize and sorghum. This potentially disastrous disease was first noticed in Honduras in 1972. Since then it has spread widely to all regions of the country, and has been documented to decrease maize yields by up to 30%. It must be noted that Sintético Tuxpeño, the most commonly used commercial maize variety in Honduras is highly susceptible to Cenicilla. Research into the control of Cenicilla has taken two forms. Plant breeders began screening materials introduced from CIMMYT, El Salvador, and Guatemala in 1979 seeking Cenicilla tolerant or resistant maize varieties to cross back with existing commercial varieties. This breeding effort and subsequent on-station and on-farm testing has lead to the development of the maize variety PNIA RM2, which combines Cenicilla tolerance with satisfactory yield performance. Research was also begun on chemical control of Cenicilla. These efforts have shown substantial decreases in the indidence of Cenicilla when maize seed is treated with the fungicide Ridomil. In this way PNIA research is one step ahead of a very serious hazard to basic grain production and farmer well-being in Honduras. To conquer this disease research must continue.

Research on Long-Run Productivity

Serious consideration must be given to maintaining and increasing productivity. This is being done on a regional level in Honduras through PNIA studies on cropping systems, soil conservation, and fertilization. Careful agronomic and economic evaluation of fertilizer experiments has resulted in regional fertilizer recommendations which often differ from the universal recommendations by national credit lending institutions.

Because limited resource Honduran farmers are caught between escalating fertilizer prices on one hand and increasing population pressure on the land on the other hand, the PNIA research emphasis is shifting toward green manure crops and soil conservation techniques. Zero-tillage, for example, reduces input cost because crop and weed residues are incorporated into a surface mulch rather than burned. Weed regrowth is then controlled by herbicides until the mulch is adequate to restrict weed growth. At that point, the mulch also serves to conserve soil moisture, decrease soil temperatures, and increase the organic matter content of the surface soil horizon. These natural benefits all enhance soil productivity.

Technology Transfer Mechanisms

As PNIA has gained experience in on-farm research and the ICTA/PNIA methodology of socio-economic analysis by region and sub-region, the relationship and interaction between researchers and extension agents has expanded. Extension personnel and the farmers themselves are therefore more actively involved in the experimental process from the initial experimental design and selection of variables to the final harvest and evaluation of results. In this way, farmer's technical needs and socio-economic constraints are better understood by research personnel while at the same time the transfer of relevant technical information to the farmer is enhanced. The PNIA/ICTA methodology also utilizes farmers in the final stages of technology screening to obtain the necessary parameters for anticipating the economic impact of the new technology.

III. RECOMMENDATIONS

Reprogramming Priorities

The team recommends that the funds remaining in the USAID/Honduras project be used to consolidate the progress made to date in establishing a multidisciplinary on-farm research capability within PNIA. To accomplish this objective, the AID funds would be most effectively used in the following four areas.

1) To provide logistical support to the on-farm researchers,

2) To reorganize the national technical support unit,

3) To assist the commodity research teams in responding to farmer needs as identified through on-farm work, and

4) To develop the planning capacity of PNIA.

Logistical Support for On-Farm Researchers

For the researcher to conduct on-farm research, it is essential that he have operating expenses to maintain and use a vehicle, to cover per diem, and to conduct farm trials (hiring of day workers, inputs, tools).

Recommendation: The team recommends that the AID project provide logistical support to the on-farm researchers up to that amount which PNIA is providing.

Reorganization of Technical Support Unit

Effective on-farm research requires multidisciplinary technical support. The National Technical Support Unit should be reorganized. A minimum of six disciplines should be represented in the unit including plant pathology, entomology, agricultural economics, biometrics, soil management, and weed control. They should be located in that zone where they can do their most effective work but should meet regularly to help plan, direct, and evaluate the problem. These positions should be filled as soon as possible. PNIA should determine the qualifications of each of these specialists and begin recruiting. Preference should be given to Honduran technicians. If they are not able to be attracted to the program because of remunerative problems, foreigners should be approached.

Recommendation: It is recommended that AID funds be used to contract personnel for the National Technical Support Unit. The salaries for Honduran and foreigners should be comparable, based of course on training and experience. Also logistical support should be provided so that the members of the unit can respond to requests outside the region where they work and reside. The amount of logistical support should not excede the contribution of the GOH. The Support Unit should prepare an in-service training program indicating the kinds of courses, the number of participants, and the duration. It is recommended that AID funds cover the cost of training up to the amount of $150,000. Also it is recommended that equipment needed by the specialists be procured and two vehicles purchased up to a total cost of $25,000.

Enhancing Commodity Research's Responsiveness

In order to effectively generate new varieties in response to the needs of the farmers, the plant breeders require laboratory equipment. For example, both the rice and maize breeders based at the Guaymas station have no equipment in their laboratories. This lack of laboratory facilities greatly impedes their work. Short term technical assistance should be used to identify the minimum essential equipment for the breeders.

Recommendation: It is recommended that the equipment be purchased but only after careful coordination with other donor who are supplying resources to PNIA.

In addition, the plant breeders are using a micro-computer which was purchased with PNIA funds. They have a few software analytical programs and are making limited use of the computer. They would benefit from some technical assistance to assess their needs, develop other software and make contacts with others using micro-computers to analyze agronomic and economic data.

Recommendation: The team recommends that short-term technical assistance be provided to assist PNIA researchers to develop new programs and acquire appropriate accesories.

Long and Short Range Planning

The effectiveness of the AID funds will depend on the planning capability of PNIA. The annual operational plans are insufficient. There are no long range plans. Planning has not yet been institutionalized in PNIA. A planning system needs to be developed which takes into consideration the particular situation of PNIA and the human resources available. The system should be approved by the appropriate authority and implemented. It should be a simple system. For example, the long range plan would consist of ten year quantifiable objectives and the global budget for each of the next ten years. An intermediate plan would coincide with the sectoral five year plan, would have quantifiable objectives, and be budgeted by line items for each of the five years. Annexed to the five year plan would be a staffing projection by specialization. The operational annual plan would fit into these plans and would be detailed as to activities, personnel, and budget. The annual plan should include monitoring and evaluation.

Recommendations: It is recommended that the appropriate authority in the Ministry of Natural Resources require that PNIA prepare these plans for his review not later than August 31, 1981. It is also recommended that long term technical assistance be obtained in designing a planning system for PNIA and in developing long, medium, and short term plans. A sub-contract with an international center such as CATIE, CIMMYT, or CIAT may be the easiest way to procure these services, which would be covered under the AID funds.

TABLE 1 Research Priorities for Basic Grain Commodity Programs

earch Classification	COMMODITY			
	Maize	Beans	Rice	Sorghum
Agronomy				
Fertilization	N-P-K	Phosphorus	N-P-K	N
Crop Maturity	Early maturity	Early maturity		
Weed control	No-tillage	No-Tillage	Herbicides	
Plant Characteristics	Husk length	Pods shouldn't touch ground		
	Shorter height	Type 2 growth habit		Less photosensitiv
Seed Characteristics		Disease free		
Other	Open pollenated			Planting date with maize
	Crystaline Endosperm			Bird problems
				Cutting
Plant Protection				
Disease control	Sclerospora Sorghi	Bean Common Mosaic Virus	Pyricularia oryzae	Sclerospora Sorghi
	Helminthosporium Maydis			
	Puccinia Sorghi			
Insect control	Spodotera frugiperda			Contarina Sorghi
	Diatrea sp.	Empoasca Krameri		
		Vaginulus plebeius		

TABLE 2. PNIA Improved Varieties

Commodity Program	Variety Name	Varietal Characteristic	Yields (TM/ha.)		
			Commercial Variety*	Improved Variety	% Increas
Maize	Guayape B102	Cenicilla, Tolerant; white grain	Sintetico Tuxpeño o Hondureña	6.34	2.1
	Guaymas B101	White grain	Plant Baja:	6.51	4.8
	Guaymas A501	yellow grain	6.21	6.35	2.3
Beans	Acacia 4	Red bean; resistance to BCMV	Zamorano 0.73	1.70	132.9
Rice	4440	Pyricularia Resistant	CICA 9: 3.87	4.32	11.6

rage yields for traditional varieties grown under typical farm conditions in Honduras would be significantly lower.

TABLE OF CONTENTS

		Page
SUMMARY		
I.	Introduction	1
	Objective of the Evaluation	1
	Evaluation Team Methodology	1
	Key Issues to be Addressed	2
II.	Background of Project	5
	The Beginnings of Multidisciplinary On Farm Research	5
	Initial Phase of the Project	5
	Current Situation	6
	Rationale for Project Approach	6
	Importance of Small and Medium Size Farmers	8
III.	Organization	10
	Structure	10
	Resources	14
	Organizational Options	17
IV.	Operations	19
	Planning	19
	Administration	20
	Activities	21
V.	Research Results	26
	Research Results by Commodity	26
	High Impact Technology	27
	On-farm Research Progress	28
	Conclusions	31
VI.	Recommendations	33
	Logistical Support for On-farm Researchers	33
	Reorganization of Technical Support Unit	33
	Enhancing Commodity Research's Responsiveness	34
	Long and Short Range Planning	34
	Secondary Recommendations	35

Appendices

A. Written Material and Documents Reviewed by the Evaluation Team
B. List of Individuals Contracted During Evaluation
C. Figures and Tables
D. On-farm Research Methodologies
E. Progress Towards a Concensus on Methodology

List of Tables

1. Names of Individuals Holding Key Administrative Positions in SRN: 1977-81 3
2. Basic Grain Production Targets and Production Estimates 7
3. Basic Grain Production by Farm Size 8
4. PNIA Budget 14
5. PNIA Budget in Real Purchasing Power 15
6. PNIA Staffing 16
7. PNIA Experiment Stations 21
8. Distribution of PNIA Technical Personnel 22
9. Percentage of Research on Varietal Improvement 23
10. Percentage of Research Conducted On-farms 24
11. Research Priorities for Basic Grain Commodity Programs 27
12. PNIA Improved Varieties 28
13. Trials Summary -- Comayagua Region 29
14. Yield Performance of Improved Maize Varieties 29

Figures

1. a. SRN -- Line of Authority: Minister to Regional Directors 11
b. SRN -- Line of Authority: PNIA Chief to Regional Resource Coordination 12
c. SRN -- Line of Authority: National Commodity Project Chief and Regional Commodity Project 13

2. PNIA Staffing Pattern 17

3. Honduras -- Agricultural Regions 23

Table 1

Names of Individuals Holding Ken Administrative Positions in the National Agricultural Research Program in Honduras: 1977 - 1981

POSITION	Name of Individuals holding position, by year				
	1977	1978	1979	1980	1981
Minister	Callejas	Callejas	Callejas	Callejas	Castillo
Vice-Minister (Efraín Díaz Arrivillaga)	Guillermo Sevilla	Guillermo Sevilla	Guillermo Sevilla	Guillermo Sevilla	Miguel Angel Bonilla
Operations Director	Arturo Galo	Arturo Galo	Arturo Galo	Iván Madrid	Manuel Valladares
Operations Sub-Director	Iván Madrid	Iván Madrid	Iván Madrid	Francisco Martínez	F. Martínez
					M. Romero Tróchez
					Celeo Osorio
Director, South Region Choluteca	Roberto Paz	Roberto Paz	Roberto Paz	Roberto Paz	?
Director, Comayagua	Humberto Gaeckel	Humberto Gaeckel	Humberto Gaeckel	Humberto Gaeckel	Francisco Rodas
Director, North San Pedro Sula	Javier Williams	Javier Williams	Guillermo Maradiaga	Guillermo Maradiaga	Roberto
Director, Central East Danlí	Fausto Cáceres	Fausto Cáceres	Adolfo Sevilla	Adolfo Sevilla	Fausto Cáceres
Director, North East Olancho	Mario Dacarett	Mario Dacarett	Mario Dacarett	Mario Dacarett	Padgett
Director, Atlantic Coast	Julio Gonzalez	Julio Gonzalez	Victor Dacarett	Victor Dacarett	Victor Dacarett
Director, West	Jorge Abastidas	Jorge Abastidas	Joaquín Fernandez	Joaquín Fernandez	José L. Palomo
Chief, Extension Program	Francisco Martínez	Francisco Martínez	Julio Gonzalez	Julio Gonzalez	Gerardo Robleda
Chief, Human Resources Program	Elías Sanchez	Elías Sanchez	Raúl Paz	Raúl Paz	Raúl Paz
Chief, Seeds Program	Rafael Díaz	Ottoniel Viera	Ottoniel Viera	Ottoniel Viera	Rafael Martínez
Chief, Soils Program	F. Martínez	F. Martínez	René Medina	René Medina	René Medina
Chief, Research Program	Antonio Silva	Antonio Silva	Mario Contreras	Mario Contreras	Antonio Silva
Research Coordinator, South	Armando Badía	Roberto Hernández	Roberto Hernandez	Armando Badía	Leslie Rápalo
Research Coordinator, Comayagua	Amado Suazo	Amado Suazo	F. Rosales	F. Rosales	Gerardo Reyes
Research Coordinator, North	Roberto Cáceres	Roberto Cáceres	J. J. Osorto	M.A. Bonilla	J. J. Osorto
Research Coordinator, Central East	Federico Ramos	Federico Ramos	Hector Fernández	Gerardo Reyes	Orly García
Research Coordinator, North East	José Oset	José Oset	Abilio Cruz	Elio Durón	Elio Durón
Research Coordinator, Atlantic Coast	-	-	Roberto Ortíz	Henelio Maradiaga	Héctor Aguilar
Research Coordinator, West	-	-	E. Enamorado	Miguel Sosa	Roberto Cáceres/Jorge
Chief, Corn Project	Luis Brizuela	Luis Brizuela	J. J. Osorto	J. J. Osorto	J. J. Osorto
Chief, Sorghum Project	Rigoberto Nolasco	R. Nolasco	R. Nolasco	R. Nolasco	Miguel Soler
Chief, Rice Project	Mauricio Rivera	Mauricio Rivera	Rolando Rubí	N. Reyes	N. Reyes
Chief, Beans Project	Federico Ramos	Federico Ramos	Otto Tercero	Otto Tercero	Federico Ramos
Chief, Yucca Project	Walterio Cáceres	Walterio Cáceres	Antonio Irías	Antonio Irías	?
Chief, Potato Project	David Aguilar	D. Aguilar	D. Aguilar	D. Aguilar	D. Aguilar
Chief, Vegetable Project	Freddy Maradiaga	F. Maradiaga	F. Maradiaga	F. Maradiaga	Renán Funez
Chief, Soya Project	Roberto Cáceres	Luis Bustamante	José R. Ramírez	J. R. Ramírez	R. Ramírez
Chief, Sesame Project	Gilberto Vasquez	Gilberto Vasquez	Marcial Rodríguez	Marcial Rodríguez	?
National Research Asst. Harvesting			Roduel Rodríguez	Roduel Rodríguez	Roduel Rodríguez
National Research Asst. Cattle			Omar Toro	Omar Toro	Omar Toro
National Research Asst. Regional			Adán Bonilla	Adán Bonilla	Adán Bonilla
National Research Asst., Chief Central Unit			Franklin Rosales	Franklin Rosales	Rafael Rodriguez

production constraints is essential to setting station research priorities. Communications between the two types of researchers is indespensable. The ideal is mutual participation in the work that each is doing. This issue will be addressed in the Section IV below entitled Operations.

II. BACKGROUND OF PROJECT

The Beginnings of Multidisciplinary On-farm Research

The on-farm multidisciplinary research work began in May of 1977 almost two years before this Project was initiated. A young Honduran who received his doctorate in plant pathology returned to work in PNIA. He interested collegues from his university who had done their dissertation work together at CIMMYT in Mexico to join him in establishing a new approach to agricultural research in Honduras. Over the next six months, an interdisciplinary team was formed with these and other highly qualified research technicians.

It was a difficult beginning because of indecisiveness regarding PNIA's leadership. Issues that went unresolved were the location of the Central Technical Support Unit (UNAT) and the naming of its director. There was opposition to the new approach particularly by those who were already familiar with and using an on-farm approach which had originated at CIMMYT. Most of the proponents of the new approach were trained at CIMMYT where they had learned that the CIMMYT on-farm approach which was being used in Honduras was no longer recommended by CIMMYT. They were constantly challenged as they attempted to introduce the new approach.

The Initial Phase of the Project

In January of 1978, a report on agricultural research in Honduras was published by IADS. This report influenced A.I.D.'s conceptualization of the Project which was approved with grant funding for $1,900.00 in September of 1978. The specific objective of the Project was to establish multidisciplinary on-farm research teams in all seven regions of the country. The Project primarily made available technical assistance funds to hire specialists.

During the initial period, two important publications were prepared by PNIA. One, the Documento Basico (I-4), details the organizational structure of PNIA. The other, the Guia Methodologica (II-6), describes the methods to be used in conducting on-farm research beginning with the diagnostic stage through farm testing and validation stages. The UNAT program to train the on-farm research teams was developed.

Two other entities were also experimenting with on-farm testing. The Maize and Bean Project (PROMYF) assisted by CIMMYT and CIAT was active in the northern and eastern part of the country. CATIE was working in the San Pedro Region using an approach which was basically the same as PNIA.

Toward the end of 1980, problems began to surface in PNIA. The foreign technicians had been leaving and were not replaced. The national program/regional implementation dilemma and the salary crisis with the loss of highly qualified nationals became critical issues.

Current Situation

It is important that the analysis and recommendations that emerge regarding PNIA's organization and operations be looked upon in the framework

of the political and economic circumstances presently prevailing. Honduras is in a period of transition from a military government to a democratically elected consititutional government. Politics and not development has become the primary concern. In addition, the economic situation of the country is critical. Revenues are down particularly because of decreased income from export crops. The SRN has had an across-the-board cut in budget. PNIA operating expenses have been drastically reduced. Annual personnel contracts have not be renewed. Reimbursements for approved travel expenses have not been made. There is little indication of government support for the research program.

This critical situation affects the research program at a time when work of the recent past starts to pay off in terms of new technologies with potential of substantially augmenting production of basic grains by target farmers. The political and economic difficulties of the GOH and SRN may seriously affect a program that depends on stability of well trained personnel to maintain the continuity of complex research. These factors are basic to institutionalizing a system capable of generating, testing, and transfering technology that is effective in increasing farmer income, employment and output.

Rational for the Project Approach

A complex set of social and economic factors in Honduras provide a strong rational for trying to reach the majority of farmers with more effective agricultural technology, thereby enhancing their employment and income opportunities.

Population growth rates in Honduras are among the highest in Latin America. The 1980 population of slightly over three million is expected to more that double by the year 2000. The rural population represents some 66 percent of the total and has a very high incidence of rural poverty. Studies carried out for the 1978 USAID Agricultural Assessment identified two small-farm target groups: independent farm households of less than 35 hectares per farm, and all reform-sector farms. This study concluded that in 1978 only 16 percent of this target group had an income above the "poverty line," defined as having a 1969 income of over $150.00 U.S. per capita (I-6, Annex K). A very large portion of the estimated 120,000 landless rural households are also considered to be below this poverty line.

Faced with problems of low income, rural as well as urban consumers have also been confronted with relatively rapidly rising basic food prices. Since the base year of 1966, the general price index in Honduras has gone up 232 percent (through the end of 1980) while the market basket of food prices has increased 257 percent (I-9, p. 23). A comparison of prices of selected items in the food basket has shown that the prices of corn, beans, and rice have risen between 134 and 167 percent between 1966 and 1977; prices for milk and eggs rose only 40 percent and those for meat, bread, and cooking oils rose some 80 percent (I-12, p. 7). It is difficult to identify precise causes of these rising basic grain prices, although on the demand side population growth is a major factor. Income growth is not likely to be important as real increases in income have been modest, at best. In the past two years high prices for basic grains in Nicaragua and El Salvador may have also stimulated unofficial exports, thus increasing demand for Honduran staples.

On the supply side, with the exception of rice, production targets for basic grains were not met in the GOH Five Year Plan 1974 - 78. As shown in Table 2, 1978 production levels were significantly below the 1978 targets for corn, beans and sorghum. Rice production did surpass the target level in 1978, although substantial imports were required in 1975 through 1978 to meet domestic requirements. Also shown in this Table are 1979, 1980, and 1981 estimates of actual production, and the GOH target estimates of demand and production for 1983. These figures indicate that basic grain supply increases will likely again fall short of anticipated levels. It is difficult to assess the likelihood and precise impact of this without studying more carefully the assumptions used for the GOH demand projections and examining more carefully the precision of the actual production estimates. Yet it does appear likely that the general price level of basic grains will continue to increase rather rapidly as a result of reduced supplies, assuming importas are not used to depress prices.

TABLE 2. BASIC GRAIN PRODUCTION TARGETS AND PRODUCTION ESTIMATES
(In Thousand Metric Tons)

	Production					
	Target[1] 1978	Actual[1] 1978	Actual[2] 1979	Estimate[2] 1980	Forecast[2] 1981	Target[3] 1983
Corn	472	417	343	358	400	541
Rice	30	32	32	26	27	53
Beans	56.2	35	38	38	42	60
Sorghum	55.9	42	37	34	36	49

1/ Source: GOH Plan Nacional de Desarrollo 79-83 (I-10, p. 5)

2/ Source: US Agricultural Attache Report (I-7)

3/ Source: GOH Plan Nacional de Desarrollo 79-83 (I-10, p. 16)

Another important factor justifying this project is the decline in Honduras traditional exports of basic grains to other Central American Countries which has reduced foreign exchange funds. This exchange deficit problem is especially acute now that there are simultaneous domestic shortfalls that must be made-up by imports. Data in Tables 1-4 of Appendix C show clearly that the favorable export position for corn and beans in the middle and late 1960s has been completely reversed in recent years. In 1980, imports of corn (64.118 MT) and beans (2,802 MT) reached all-time high records; imports have been forecast to be even higher in 1981. And while it can be argued that there are unofficial exports of corn and beans to selected neighboring countries, it is not plausible that these are of the magnitude of

exports during the 1960's. Hence it is likely that any efforts to reduce unofficial exports could go only part way in making up Honduras' current deficits in corn and beans.

Importance of Small and Medium Size Farmers in Domestic Grain Production

The current production situation underscores the importance of working with small and medium size farmers in order to improve their farm income situation and to expand the supply of basic grains for rural and urban consumers. Table 3 below shows the basic grain production by farm size.

Table 3. BASIC GRAIN PRODUCTION BY FARM SIZE

Size of Farm Ha.	% of Farms	% of Area	Percentage of Total Production			
			Maize	Beans	Rice	Sorghum
Less than 5	64	9	41	41	27	47
5 to 10	14	8	15	16	14	17
10 to 20	10	10	13	15	14	13
20 to 50	8	17	14	14	18	10
Greater than 50	5	56	17	14	27	13
Total	100%	100%	100%	100%	100%	100%

Source: Agricultural Census of 1974, sited in (1-12 p. 29)

While farms of 50 hectares and more occupy 56 percent of the farm land in Honduras, they produce less than 20 percent of the basic grains. (Rice is an exception with 27%). The USAID small farmer target population is defined as those farms of less than 35 hectares. Even with his small size limit, substantially more than 50 percent of the supply of basic grains are produced by small farmers. Moreover, studies have shown that an average of 70 percent of on-farm income for these size farmers comes mostly from basic grain crops (I-6, Annex K). These studies show that farms in the five to 35 hectare size range sell about 50 percent of their grain production and retain the rest for home use. Farms of less than five hectares sell only about one third to one fourth of their crop. Thus by helping develop more effective basic grain production technology for small and medium farmers to lower costs, expand output, or both, the Project is attacking problems of lower income as well as reduced supply of basic consumer food items.

III. Organization

Structure

Agricultural and livestock research falls within the domain of the Secretariate of Natural Resources (SRN). The research program (PNIA) is one of nine programs under the director general of agricultural operations who reports directly to the minister. The PNIA is headed by a chief and his deputy with a small staff consisting of an administator, an assistant administrator, and secretaries all of whom are stationed in the ministry. Reporting directly to the chief of PNIA are the regional research coordinators, the chief of each commodity project, and the chief of the support unit (UNAT) all of whom based outside the ministry.

The research program is implemented at the regional level under the direction of the regional research coordinator. The coordinator is responsible for integrating the station and on-farm research and supervising any commodity project work in his region.

An analyis of this decentralized organizational structure reveals that there are two lines of authority reaching the researchers working at the regional level. Both lines of authority originate from the minister. One line (see figure 1a) goes to the regional directors and then to the regional research coordinators. The other line (see figure 1b) goes first to the director general of agricultural operations, and then to the chief of PNIA who deals directly with the regional research coordinators. In theory, the chief of PNIA provides technical direction, while the regional directors provide executive direction. In practice, however, the regional directors control their respective research programs and are able to redirect activities as they see fit. The result is a less efficient national research program. Continuity in research is often interrupted, national policies are applied with a regional bias, and national priorities are changed to meet regional needs.

The commodity projects are probably most seriously affected by this overlapping structure because they are not geographically confined to one region. The chief of each commodity project is located in the region where he can do his most effective work. In theory, they are responsible for directing commodity research at the national level but in practice are confined to the region where they assigned (See figure 1c) and have little contact with the commodity research work in other regions.

The UNAT had a similar problem in that it is physically located in Region 2 but responsible for providing technical assistance in all regions of the country. The UNAT had concentrated its effort most recently on the training program in Region 2 which obviated the problem. The problem will reappear particularly if the training program is to be carried out in the different regions and if the UNAT will be required to provide technical assistance to all the regions.

On the positive side, implementation of the research program through the regional directorates of the SRN does facilitate coordination with other agricultural programs. Relations with the extension program (PNEA), for

FIGURE 1A

SECRETARIATE (MINISTRY) OF NATURAL RESOURCES
Line of Authority: Minister to Regional Directors

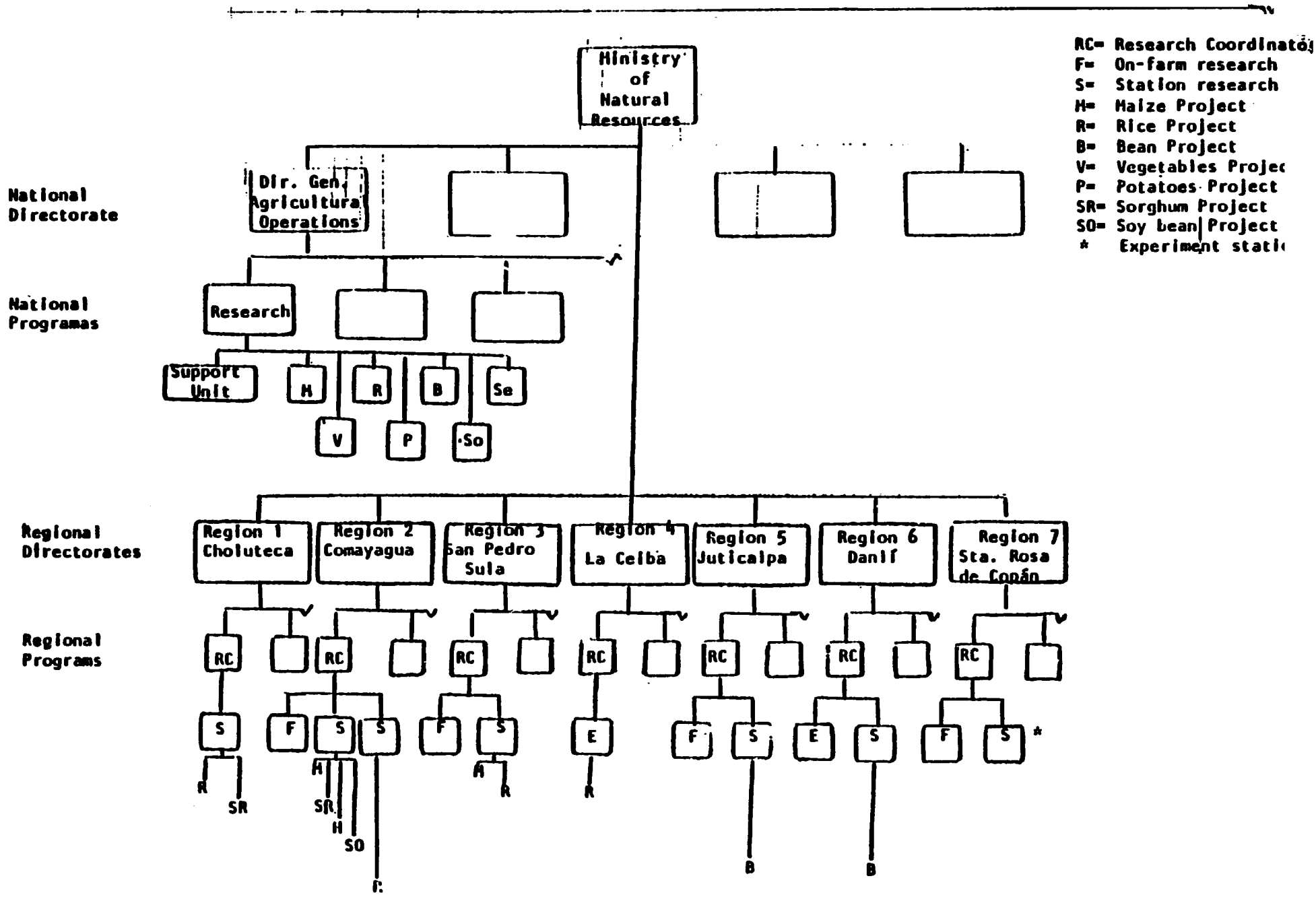

FIGURE 1B

SECRETARIATE (MINISTRY) OF NATURAL RESOURCES
Line of Authority: PNIA Chief to Regional Research Coordinator

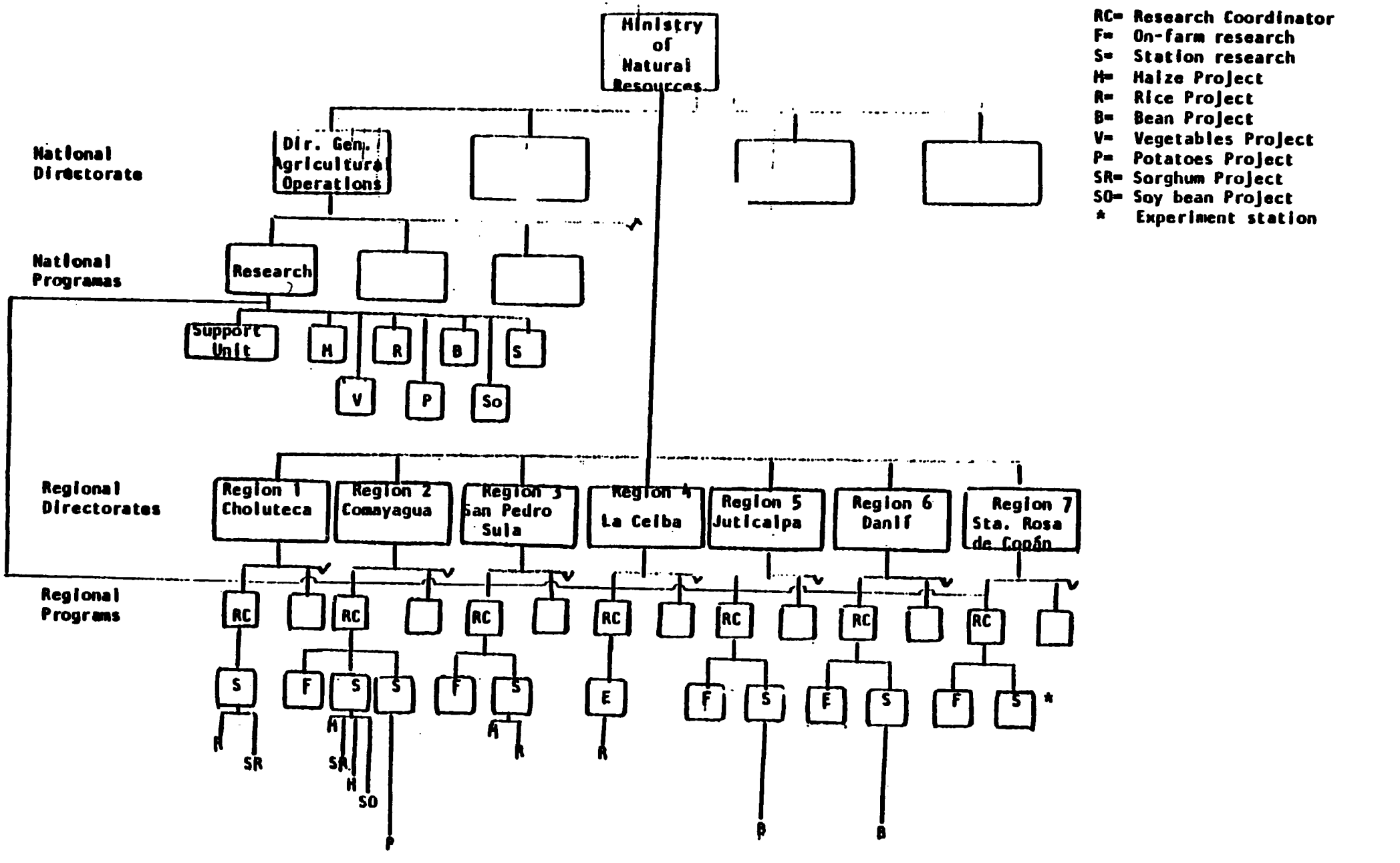

FIGURE 1C

SECRETARIATE (MINISTRY) OF NATURAL RESOURCES

Line of Authority: National Commodity Project Chief and Regional Commodity Project Reserchers

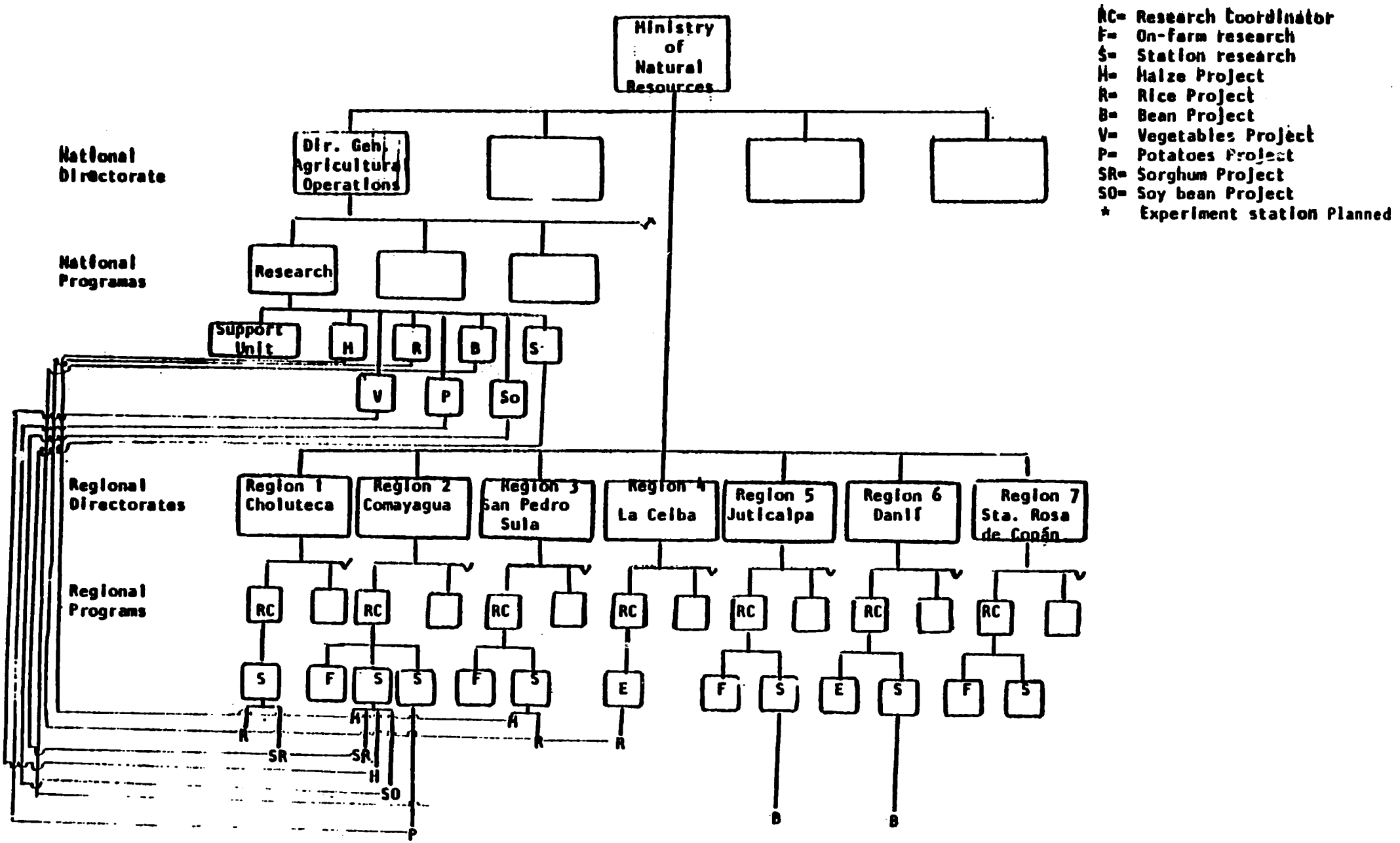

example, are favored particularly by the on-farm research approach. Coordination should be maintained and strengthened by securing participation of extension agents in the on-farm research process beginning with the diagnostic stage. The model suggested in the PNIA report of September 1980 (V-3) should be adopted as standard operating procedure. The working relation already established between research and extension in the Regions 4 (La Caibu) and 5 (Juticalpa) are examples of how effective joint efforts among these two programs of the SRN can be. Another example where coordination is facilitated through regional implementation is with the seed program (PNS) in Region 3 (San Pedro Sula).

Resources

The GOH's present contribution to research has increased steadily over the past several years to an amount slightly over a million dollars for the current year (See Table 4). Research, has only received about

Table 4. PNIA BUDGET

Year	Funds
1976[1]	$ 413,630
1977[1]	619,165
1978[1]	797,205
1979[1]	818,605
1980[2]	950,000
1981[2]	1,182,400

Sources: 1 (Rosales, XI-5, p. 6)
2 Personal communication, chief of PNIA

2.5 percent of the MNR's budget as compared to extension which receives approximately 20% of the MNR's budget. In real terms, however, the budget has not increased. Using the Consumer Price Index (CPI), the GOH's contribution to research in 1978 dollars has actually dropped for the two intermediate years and for this year has barely passed the value of three years ago (See Table 5).

TABLE 5. PNIA BUDGETS IN REAL PURCHASING POWER

Year	GOH Contribution in Constant 1978 Prices
1978	$ 797,205
1979	722,828
1980	727,700
1981	798,120*

* Estimate based on rate of inflation for 1981 equal to 1980.

The GOH has been able to obtain assistance from international donors in amounts equal to or surpassing the national contribution to PNIA. In 1980, PNIA received $950,000 from outside sources. PNIA estimates that over a $1,000,000 will be obtained for the current year. This estimate does not include grant funds from the AID project which have not yet been incorporated into PNIA's current budget estimate pending review of the project's progress.

Budget support from international donors includes the International Development Association (IDA) of the World Bank and the Inter-American Development Bank (IDB) and from bilateral donors includes the Canadians, the Swiss, and the Chinese (Taiwan).

In 1979, IBD loaned the GOH $8 million to complete a second phase of strengthening SRN's technical and institutional capabilities in each of the nine programs of the SRN, e.g., research, extension, animal health, and seed production. The IDB has obtained approximately 50% of these funds from the European Economic Community. Disbursements are scheduled to begin in 1981. These resources will be used for improvement of facilities and land and for purchase of equipment and inputs for trials.

The PNIA also works with CIMMYT, CIAT, and CATIE. CIMMYT and CIAT have supplied germ plasm, complementary technologies, and training. CATIE has a resident cropping systems agronomist stationed in Region 2 (Comayagua) who concentrates his efforts in the higher altitudes areas around La Esperanza.

The PNIA professional staff at the end of 1980 consisted of 64 technicians and two administrative types. This is twice the number of people employed by PNIA in 1977. The increase, however, is due mainly to contractual arrangements with individuals rather than by increasing the direct hire positions. Table 6 compares the personnel situation of 1977 with 1980.

TABLE 6. PNIA STAFFING*

Date	National		Regional							Total
	Direction	Tec. Support	#1	#2	#3	#4	#5	#6	#7	
1970										
Direct-hire	1	5	4	6	9	0	3	5	0	33
1980										
Direct-hire	2	2	7	5	10	2	3	5	1	37
Contract	2	2	0	4	3	4	9	3	2	29
Total	4	4	7	9	13	6	12	8	3	66

* Sources - PNIA Operational Plan for 1977, IADS Report - 1978, and List of Technical and Administrative Personnel - 1980.

While it is encouraging to see that the number of technicians has doubled, it is disappointing that there are only four new direct hire positions. To meet the objective of the Project, eight new positions should be created each year to do the on-farm multidisciplinary research. Contracting is a poor substitute for creation of new positions, since there is no assurance that the person contracted will remain beyond a year. Eight permanent PNIA positions should have been established to absorb the 1979 and 1980 graduates of the on-farm research training. Half of these graduates have been given contracts, the rest have left the program.

About two-thirds the people on contract depend on external sources for their funding, and the remaining one-third on national funding. Contracting is attractive to some because a higher salary can be negotiated as compared to that of the direct hire positions. There are few fringe benefits. And although the contracts are renewable, few renew them more than once. The result is a high turnover of personnel. PNIA is losing many of the people in whom it has invested scarce resources to train.

It is not only the contracted arrangement but also the low salaries which aggravate the high turn over of personnel. Research by it nature requires highly qualified technicians. The salary structure of SRN does not compensate adequately for the education and experience of the more highly qualified technical people. Unless salary adjustments can be made, these highly qualified people will continue to be lost to the private sector.

The most recent PNIA staffing plan (XIII, 5) calls for 68 technicians, 45 of which have been identified. Of the 68, 10 are in supervisory positions, 23 in commodity work at the experiment stations, 30 in on-farm research and six on the technical support unit. Of the latter six positions, only the plant pathologist's position was filled. Figure 2 illustrates the staffing pattern and number of people in each position. The intention is to fill the 23 vacancies through contracts funded from sources other than the PNIA budget. At least 10 of the remaining 45 identified technicians need to have their contracts renewed this year.

The contracting mode is not appropriate to a research program which require stability and long term continuity. Neither is the present salary

FIGURE 2

PNIA STAFFING PATTERN

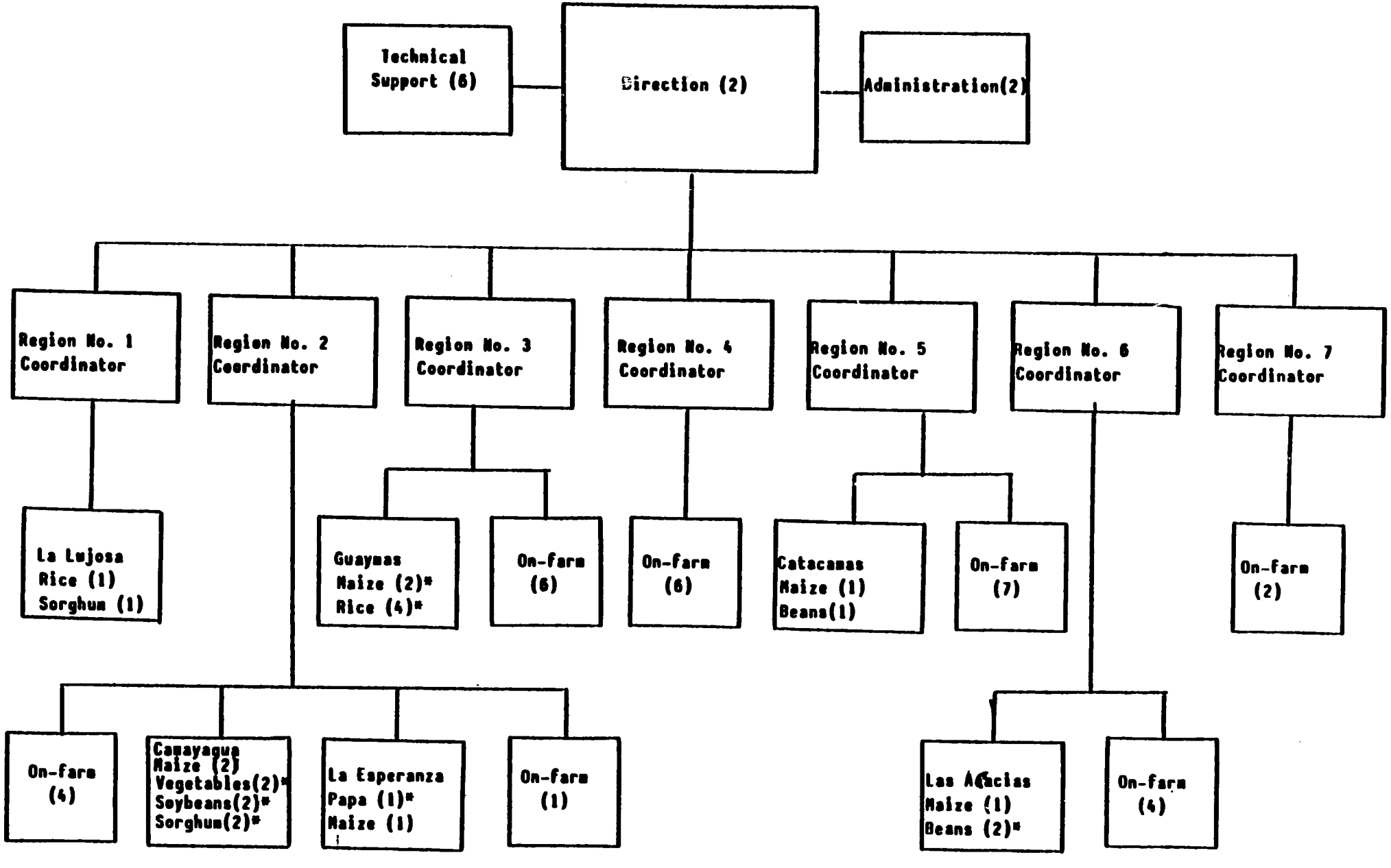

* Indicates that one of these researchers also function as national chief of project for this commodity.

structure sufficient to attract and retain the kinds of qualified people required for agricultural research. These are key issues that need to be resolved if PNIA is to do its work effectively.

Organizational Options

PNIA differs from most research organizations in Latin America in that it is not an autonomous decentralized institute but rather a "program" within the SRN. As such it does not have independence of operation and is subjected to overall SRN influences and pressures at the national level and particular influences and pressures at the various regional levels. As a result PNIA effectiveness depends largely on personalities and relationships among those in management roles.

The ideal would be to reorganize PNIA as an autonomous organization which would allow sufficient independence particularly with respect to technical decision making. Autonomy would provide control over its budget, allow for adjusting the salary scale to compensate adequately for the highly qualified people that are needed, and coordinate research efforts that overlap regional boundaries. Autonomy is not a pressing issue at this time because of the smallness of the program. If research is to impact on agricultural and livestock production, the program will have to be expanded. Autonomy would then become an important consideration.

Under the present circumstances, PNIA should take the initiative to compensate for the weakness in the organizational structure. Communications must be improved between the chief of PNIA and the regional directors. One way to improve communications is by involving the regional directors in the planning process. The present planning system is inadequate. There is no long range research plan and the annual operational plan is incomplete and is not sufficiently integrated into the regional director's plan. Another way to improve communications is to distinguish between technical and administrative direction. This could be accomplished by redefining the role of the UNAT as the source of technical direction for the program. This would mean that the UNAT appear on the organizational chart between the PNIA chief and the respective regional research coordinators. The leadership of PNIA has a decisive contribution to make in compensating for the present organizational weaknesses.

IV. OPERATIONS

Planning

The National Development Plan (PND) is the basis on which PNIA prepares its annual operational plan. The current PND covers the year 1979 to 1983. The annual planning cycle begins with an updating of information contained in the PND which is prepared by the Directorate for Sectoral Planning (DPS). The Director General of Agricultural Operations (DGOA), using this information, formulates policy and budgetory guidelines for the current year. Each program, e.g. PNIA, PNE, then developes its annual operational plan.

PNIA's 1981 operational plan was not completed as of April 30, 1981. The budget component of the plan, however, had been prepared before the end of the year and had been approved although with severe reductions.

The planning process which is supposed to be followed by PNIA is found in the Documento Basico. The process begins simultaneously at the regional and national (commodity project) levels in the month of July with an estimation of budget needs and a preliminary operational plan. From August to November, a technical analysis of each regional plan takes place. In February, once the budget is approved, the regional plans are consolidated into a national operational plan at the annual PNIA meeting. The director of the PNIA has until April 30 to approve with the advice of the Technical Advisory Committee the operational plan and budget for the current year.

Two documents which are to assist in formulating the annual plans are the Regional Characterization and Diagnosis Document which is revised each year in June and the Indicative Plan which is made current each August. The Indicative Plan is the long range plan (five to ten years) for research.

In addition to detailing the planning process, the Documento Basico identifies each person who has responsibility for elaborating, reviewing, or approving the operational plans. Thus, the head of the UNAT, the regional coordinators, and the heads of commodity projects are all responsible for elaborating preliminary operational plans for their respective areas of competence. The PNIA chief is responsible for integrating these plans into the national research plan.

In practice, very little of this process is applied. The Documento Basico has never been officially approved. Characterization and Diagnosis Documents have not been prepared for all regions. And where they have been are usually specific to a zone within the region. Only a few have been updated.

Conceptually, it would be hard to argue against the planning system as described in the various PNIA documents. The system could work but it must be adapted to the constraints that PNIA faces as a research institution. It must consider the available intellectual and physical resources. The present system is too time consuming for the limited staff which is already overextended.

PNIA should begin by developing a long range plan. The work initiated two years ago and published in draft under the title Plan Indicativo was too ambitious. A less detailed and more generalized approach would suffice. The

information should be collected regionally and integrated into a general plan which establishes objectives, priorities, and strategies and estimates the budget and personnel needs.

An intermediate plan coinciding with the five-year PND should also be developed. This plan should specify research objectives and resource requirements for each year. A five year plan would lend continuity to the program and argue against annual budgetary cuts.

It would appear that the process for developing the annual operational plan as described in the Documento Basico is not realistic. It is too time consuming and as such has not been fully implemented. The operational plan that results is inadequate. It is apparent that PNIA could use some assistance in developing a planning system that would not tax its technicians unduly and yet accomplish its purpose of guiding the on-farm and station research activities in a mutually supportive manner.

Administration

PNIA financial administration is complex because of the various sources of funds for the program. A staff of two have responsibilities for administrative matters. The evaluation team concerned itself with only one aspect of administration which directly affected the research program and that was the control of operating expenses other than salaries at the regional level.

Once PNIA's annual budget is approved, funds for operating expenses are disbursed to each region. The regional director and not the regional research coordinator has control over these funds. He may arbitrarily allocate them from one program to another as he sees fit. The regional directors feel that this flexibility is good for the total regional program and that on balance each program get its share in the long run. The research people almost unanimously disagree and cite example after example of where decisions of the regional director have impeded their work to the point at times of frustration. This was particularly true of the on-farm researchers who were not given gasoline quotas or per diems in order to do their field work.

In February 1981, the Vice-Minister informed all regional directors that the funds allocated to the research program would henceforth be controlled by the national program office. In late March, the chief of PNIA advise the regional directors of the procedures to be followed to implement the Vice Minister's directive but it was too soon to see the effects of the change. The team considers it important that the funds budgeted for research are used for research, but withholds judgement as to the means being used to ensure that they are. The team believes that it is not merely a question of controlling the funds but also of the amount of the funds. It is essential for those doing on-farm research to have not only sufficient but also timely resources to accomplish their field work.

There is a similar problem in regional implementation of the program and that is the question of personnel. The regional director has authority to hire and fire the research staff working in his region. The PNIA chief has no administrative control over his personnel other than those who work directly for him in the national office.

Activities

Research activities of PNIA are organized at the national level according to major commodities. Each of these crop specific projects is based in one or more of the six experiment stations as shown in Table 7. On-farm regional research normally involves crops from several national commodity programs according to the agro-ecology of each region and sub-region.

Table 7. PNIA EXPERIMENT STATIONS

Station	Location	Elevation (m)	Area (ha)	Areas of Investigation*
Catacamas	Region No. 5 (Eastern) Olancho, Valle de Catacamas 440 15			Maize, beans, sorghum, rice vegetables, soybeans, peanuts
Comayagua	Region No. 2 (Central-west occidental) Comayagua, Valle de Comayagua	600	70	Vegetables, sorghum, rice, beans, soybeans, castor beans, peanuts
Las Acacias	Region No. 6 (Cental-east) El Paraiso Valle de Jamastran	450	54	Beans, maize, sorghum, soybeans, peanuts
Las Esperanza	Region No. 2 (Central-west) Intibuca	1,800	18	Potatoes, maize
La Lujosa	Region No. 1 (Southern) Choluteca, Choluteca	60	140	Sorghum, rice sesame, maize, soybeans
Guaymas	Region No. 3 (Northern) Yoro, Valle de Sula	60	120	Maize, rice, vegetables, soybeans, cassava

* Crops are arranged in order of importance within the region. The crops that are underlined indicate that the national project chief is working at the station.

The concentration of the Maize, Rice, and Cassava (presently inactive)* Commodity Projects in the Guaymas Experiment Station near San Pedro Sula (Figure 3) gives this region a special importance from the standpoint of basic grain production. A similar situation exists with the Comayagua Experiment Station, which is not only the principal site for the Vegetable, Sorghum, and Soybean Commodity Projects, but is also the key region

for breeding work in early maturing maize varieties and Cenicilla (Sclerospora sorghi) resistance. The construction of a seventh experiment station is planned for 1981 in the Western Region near Santa Rosa de Copan.

Table 8 shows that the Maize and Rice Projects together account for almost half of the top level technical personnel assigned to the Commodity Projects. The Northern (San Pedro Sula) Region and the Central-West (Comayagua) Region which includes La Esperanza have the greatest concentration of commodity personnel.

Table 8
Distribution of PNIA Technical Personnel - Commodity Programs (1980-81)

Commodity	Station					Total
	Guaymas	La Lujosa	Las Acacias	Comayagua	La Esperanza	
1. Maize	2-2			2	0-1	4-5
2. Beans			2-2			2-2
3. Rice	4-4	0-1				4-5
4. Sorghum		0-1		2-2		2-3
5. Soybeans				1-2		1-2
6. Vegetables				1-2		1-2
7. Cassava	1-0					1-0
8. Sesame		1-0				1-0
9. Potato					1-1	1-1
TOTAL*	7-6	1-2	2-2	6-8	1-2	17-20

* Figure on right is number of personnel proposed for 1981, on left actual number of personnel in 1980.

Since the commodity projects focus most of their research effort on varietal improvements, the international agricultural research centers play a critical role in supplying germplasm, training nationals, and providing technical assistance. CIAT is active in the National Bean Project in Danli and CIMMYT has a long history of involvement with the National Maize Project. More recently CIP has supported the National Potato Project in La Experanza, and ICRISAT has begun to work more closely with the National Sorghum Project in Comayagua. Historically, most of this technical backstopping has centered around on-station varietal screening, hybridization, and foundation seed production. During the last five years the PNIA emphasis on varietal improvement has declined. The PNIA operation plan for 1981 calculates that 56% of the experiments will deal with varietal improvement which is 15% less than the 1977 Plan (Table 9).

FIGURE 3. HONDURAS - AGRICULTURAL REGIONS

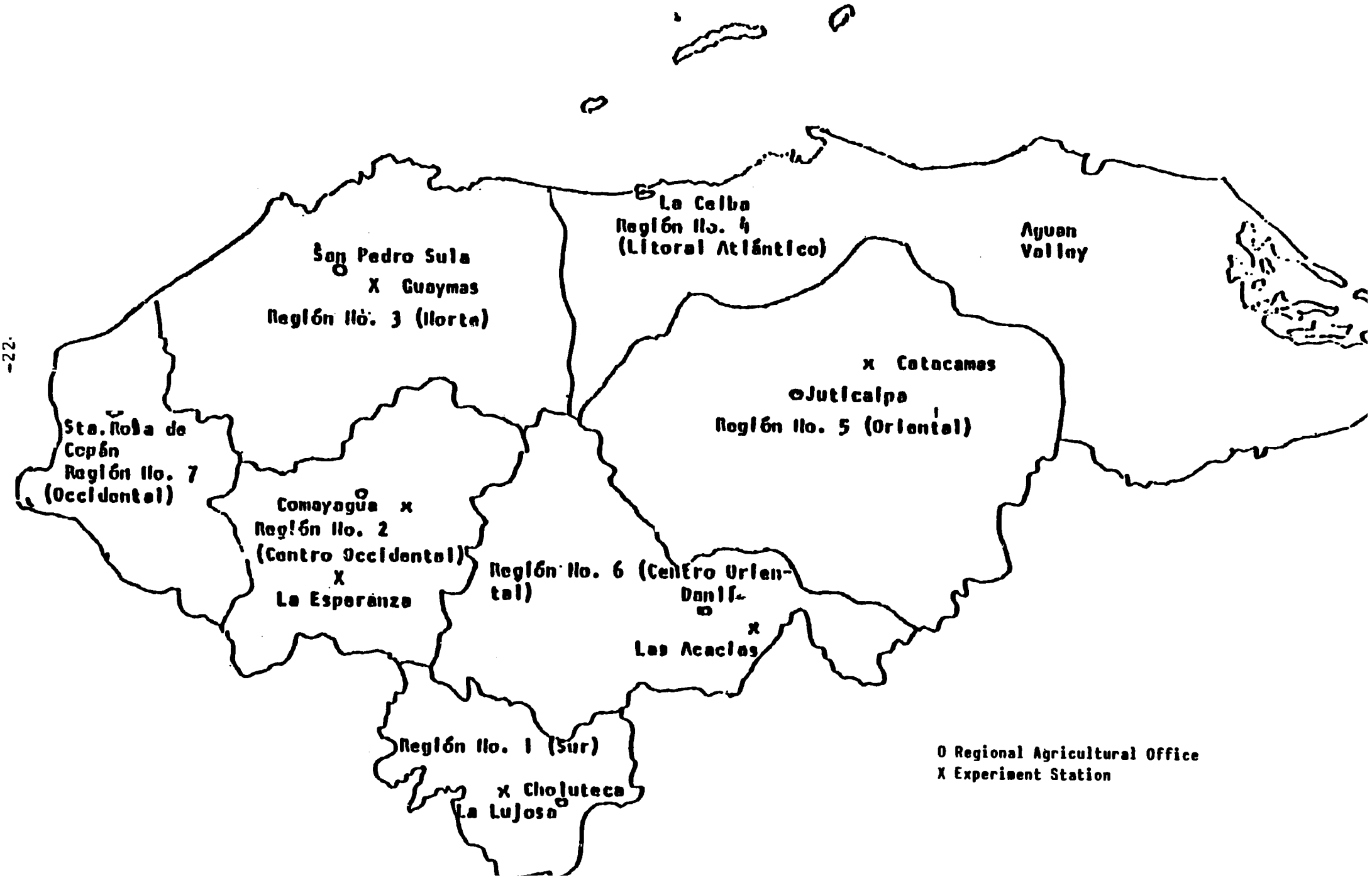

Table 9. PERCENTAGE OF RESEARCH ON VARIETAL IMPROVEMENT (1977-1981)

← Commodity Program	1977	1978	1979	1980	1981 → Year
Maize	76.1	91.8	47.3	55.5	58.6
Beans	70.3	80.9	35.8	45.5	52.1
Rice	72.1	82.1	54.1	46.2	57.5
Sorghum	84.7	83.8	54.5	30.8	72.1
Vegetables	47.3	53.2	2.9	40.7	23.1
X % for all Commodities	70.6	78.5	44.9	48.2	56.1

Although on-farm research has been conducted in every region of the country except in Danli and Choluteca. The work of these researchers involves more than simply validating the regional varietal adaptation of commodity program releases. It also attempts to identify farm level production constraints and establish research priorities. The researchers work in conjunction with local extension agents to generate and transfer technology that is appropriate to the needs of the small and medium farms.

New varieties, inputs, and cropping practices must be evaluated using economic as well as agronomic criteria in order to assure integration with the farmer's system. This requires a sequence of on-farm experiments to fine tune technological recommendations, generate sufficient information on which to base an agro economic analyses, and test technological components under farmer management. Although the PNIA experience in on-farm research is limited, momentum for this approach appears to be growing (Table 10).

Table 10. PERCENTAGE OF RESEARCH CONDUCTED ON-FARMS (1980-1981)

Year	Commodity Program					X %
	Maize	Beans	Rice	Sorghum	Vegetables	
1980	29.1	70.5	67.6	61.6	35.6	47.1
1981	74.7	87.8	81.8	57.2	53.8	77.1

A consistent PNIA on-farm research methodology that can be applied uniformly across a broad spectrum of agroecological conditions and commodity programs is still in the evolutionaly stage. (See Appendix E) This is due in part to a long history of station research with a regional varietal-testing outreach program. This traditional research extension model was modified by a series of on-farm research trials in maize and beans organized under the PROMYF program, which itself evolved over time to the present Basic Grains Program. This research extension model is supported by the international centers as a means of getting research off the experiment stations and into the "real world" production environment. It is a high-impact model designed to maximize the efficiency of a given number of field researchers and

extension agents. It has not involved farmers directly in the decision-making process or in generating technology that is appropriate to the farmers' specific needs and socio-economic constraints. The Basic Grains Program continues to develop technological packages for significant and dramatic yield increases, while the latest PNIA research model closely resembles that used by ICTA in Guatemala.

Since the traditional, PROMYF, and latest PNIA model continue to function in a complex maze of research interactions, it is not surprising that there is confusion among the research staff especially those just coming into the program. This methodological uncertainty is indirectly reinforced by the various sources of foreign technical assistance which includes CIMMYT, CIAT, AID, IICA, IDB, CATIE, Swiss Government, CIID and the Peace Corps. Of these external influences, CATIE has played a key role in supporting cropping systems research and multidisciplinary farming systems characterization which is similar to the PNIA model.

V. RESEARCH RESULTS

In order to measure PNIA effectiveness on a national scale, it is necessary to first define the specific research goals at the commodity level, and then approach the subject on research continuity over time for each of the established research priorities. Unfortunately, since the documentation of research results is sketchy and since success within the PNIA commodity and regional programs is measured more on the quantity rather than the quality of experiments, this analysis can only look for general trends based on information obtained from the personal files of some of the key people who are currently with the program.

Research Results by Commodity

Although it was not possible to quantify the precise number of experiments conducted over time, on and off the various experiment stations, Table 11 lists the major research priorities for each commodity. The two major outputs of a research program are the crop varieities with high yield potential released by the commodity programs for national distribution and the more local technical recommendations for planting date, fertilization, and pest control. The PNIA has been successful in generating both types of technology.

From the standpoint of varietal improvement in maize, researchers have attempted to incorporate several key features into commercial varieties. These include Downy Mildew (Cencilla) Scleros pore sorghi resistance, shorter plant height to prevent lodging, a crystalline grain endosperm to prevent post-harvest storage losses, and good ear coverage to reduce ear rot and insect damage in the field. The National Maize Project is also seeking to develop maize varieties for specific ecological zones through research at three different research stations, corresponding to the tropical north coast, the more arid central regions, and the higher evaluations in the Intibuca Department.

With the exception of resistance to Bean Common Mosaic Virus (BCMV), selection criteria for varietal improvement in the National Bean Project have centered primarily on traditional yield components in red bean varieties. The Bean project just received another shipment of red bean variety lines from the germplasm center at CIAT. The present shipment contains 299 lines which are all in the F_4 to F_7 stages of development. CIAT has also had close ties with the National Rice Project in the development of high yielding rice varieties with resistance to Pyricularia Oryzae, while ICRISAT and Texas A&M University have supplied germplasm for improving grain sorghum yields and grain tanning content to minimize bird damage.

TABLE 11 RESEARCH PRIORITIES FOR BASIC GRAIN COMMODITY PROGRAMS

Research Classification	Commodity			
	Maize	Beans	Rice	Sorghum
Agronomy				
Fertilization	N-P-K	Phosophorus	N-P-K	N
Crop Maturity	Early maturity	Early maturity		
Weed Control	No-tillage	No-tillage	Herbicides	
Plant Characteristics	Husk length	Pods shouldn't touch ground		
	Shorter height	Type 2 growth habit		Less photo-sensitive
		Disease free		
Seed Characteristics	Open pollenated			
Other	Crystaline endo-sperm			Planting date with maize
				Bird prob-lems
				Cutting
Plant Protection				
Disease Control	Schlerospora Sorghi	Bean Common Mosaic Virus	Pyricularia oryzac	Sclero-pora Sorghi
	Helminthosporium Maydis			
	Puccinia Sorghi			
Insect control	Spodotera frugiperda	Empoasca Krameri		Contarina
	Diatrea sp.	Vaginulus plebeius		

High Impact Technology

PNIA commodity programs have produced several varieties, which have a high impact potential due in part to their higher yield potential (Table 12 and in part to their resistance to diseases and plant lodging. In addition to the development of new varieties, PNIA commodity programs have improved the plant characteristics of existing commerical varieties. The best examples of this are the successes in increasing husk length in the maize variety Hondurena Planta Baja and reducing the plant height of the variety Sintetico Tuxpeno. The commodity programs are also studying traditional varieties such as the bean varieties Cuarteno and Cincuenteno and the Sorghum variety Peloton. Many of the short season ICTA maize varieties also show great promise for the drier regions of the country and for double cropping maize in regions with adequate soil moisture during the postrera season.

Table 12 PNIA IMPROVED VARIETIES

Commodity Program	Variety Name	Varietal Characteristic	Yields (TM/ha) Commercial Variety*	Improved Variety	Percent Increase
Maize	Guayape B102	Cenicilla tolerant white grain	Sintetico Tuxpeno o Hondurena	6.34	2 1
	Guaymas B101	white grain	Plant Baja:	6.51	4.8
	Guaymas A501	yellow grain	6.21	6.35	2.3
Beans	Acacia 4	red bean; resistance to BCMV	Zamorano 0.73	1.70	132.9
Rice	44-40	Pyricularia resistant	CICA 9: 3.87	4.32	11.6

*Average yields for traditiional varieties grown under typical farm conditions in Honduras would be significantly lower.

On-Farm Research Progress

Although attempts to institutionalize the modified PNIA research model into the newly restructured PNIA were begun in late 1977, the incorporation of the new methodological concept into ongoing regional research activities was not uniform throughout the country. The regional integration of the on farm research orientation was inhibited to a large extent by the deeply entrenched traditional research model which has been in use for several decades by the commodity programs. As a result there was a transition period in the PNIA history during which the PNIA methodology spread out of the Comayagua region into commodity program territory. To illustrate this expansion and at the same time to present the PNIA regional situation as it now exists, it would be useful to focus on research in several regions of the country.

The first on-farm research teams were organized out of the Comayagua regional agricultural research office. Three teams, each containing from three to four members each, conducted on-farm research as part of an in-service training program in three nearby sub-regions with distinct farming systems. Table 13 lists the number of on-farm trials conducted in each sub-region during the period 1978-80 as well as the specific on-station experiments which supported the on-farm work. It is evident that as experience in on-farm work was gained by the field researchers, few trials were lost and less emphasis was placed on varietal improvement.

Many of the lessons learned in using the PNIA on-farm research methodology were first experienced in Comayagua and later found to be valid for other regions of the country. Perhaps the major finding concerned the lack of yield stability of improved varieties which were basically derived from the same genetic parent material over many farm sites (Table 14). During on-station selection under optimum growing conditions, these varieties consistently

outyielded the local variety. However, in on-farm research the yields of improved varieties were statistically superior to that of the local variety in only one out of eight experiments, and the improved varieties were found to be highly susceptible to Cenicilla, which was observed on 75 percent of the farms. Insufficient husk length on the improved varieties also resulted in a greater incidence of grain loss in the on-farm trials because they were not compatible to associate planting with sorghum and because the husk did not protect the grain from birds. This led to the conclusion that the role of native sorghum varieties in the farming systems around Comayagua was to provide forage during the dry post-rainy reason. Feedback of this information into the National Sorghum Project has lead to a change in selection criteria for improved varieties and to more attention being given to improvement of native varieties.

Table 13. TRIALS SUMMARY - COMAYAGUA REGION 1978-80

Variable	La Paz			El Rosario			San Jeronimo		
	78	79	80	78	79	80	78	79	80
On-Farm Trials	30	14	17	25	8	13	10	12	20
Station Trials (related to on-farm)	3	2	2	0	3	3	0	0	1
Number Farms	8	5	11	8	5	8	5	4	9
% Trials Lost	39.4	22.2	26.3	56.0	27.3	6.3	0	0	9.5
% Station Research (related to On-farm)	9.1	12.5	10.5	0	27.3	18.8	0	0	4.8
% On-Farm Research	90.9	87.5	89.5	100.0	72.7	81.2	100.0	100.0	95.2
% On-Farm Research (Varietal Improvement)	70.0	37.5	35.3	84.0	27.3	0	50.0	25.0	30.0
Station Trials	69		171						

Table 14. YIELD PERFORMANCE OF IMPROVED MAIZE VARIETIES IN COMAYAGUA (1978).

Variety	Range of Yields (TM/ha) On-Station	On-Farm	Average On-Farm Yield Over 10 Sites (TM/ha)
Hondurena Planta Baja	4.22 - 4.63	0.47 - 2.42	2.07
Tlaltizapan	3.89 - 5.46	0.25 - 2.45	2.15
Local Variety	1.93 - 2.24	0.15 - 2.01	1.36

On-farm research to evaluate varietal resistance and chemical control of diseases and insects was inconclusive due to the fact that it was impossible to control the pathogen and apply it evently over all treatments. In many cases there was no incidence of Cenicilla or attack of Babosa in trials aimed at discovering adequate controls. In other cases only a few replications or individuals plots were affected. As is expected in on-farm research, some trials were also lost due to incorrect planting dates, farmer mismanagement, or damage by grazing animals. In some cases, the farmer harvested the crop before the researcher had time to collect data on crop. But even in trials in which researchers were successful in controlling experimental variables, the analysis and interpretation of results was faulty. In those experiments repeated over many sites, the lack of computer sophistication prevented researchers from conducting an overall statistical analysis and making a final global statement of results.

For this reason it was impossible to make general recommendations based on multilocation varietal or fertilizer experiments. Fertilizer, insecticide, and herbicide experimental results were also limited by the lack of an economic analysis to determine costs and benefits at the farm level. Conclusions from research conducted on fertilization were further limited by the use of fertilizer formulas rather than individual fertilizer elements.

The extension of on-farm research activities spread to other regions in 1979 as graduates of the first in-service training program undertook their duties in areas outside of Comayagua. The Olancho region was one of the first areas to benefit from the incorporation of the PNIA on-farm research methodology, and it is perhaps the best example of this ongoing concept as of the date of this evaluation. Research in the Olancho region has confirmed the yield potential and disease resistance of the improved varieties released by the commodity programs. The bean variety Acacia 4 was found to outyield the commercial variety Zamorano in multilocation trials. The rice variety 44-40 performed similarly in comparison to the commercial variety CICA 9, and it was noted that although the yields of the maize variety Guayape B-102 were not superior to the commercial variety Sintetico Tuxpeno, the new variety did not lodge and therefore suffer a severe loss of plant population. Recommended chemical control of Babosa in beans and weeds in rice were also confirmed, but some questions were raised about the milling properties of the new rice varieties and their lack of acceptance by farmers. However, the most noteworthy results of the extension of the Comayagua experience into Olancho, were in the form of economic analysis of results and the immediate application of zero-tillage techniques to basic grain production.

On-farm research in the La Esperanza area has fluctuated over the past three years due to personnel changes. Continuity has been maintained to some degree by the presence of the CATIE resident and the cropping systems research and socio-economic sampling that he has encouraged. In 1980, the research focus was again turned to experiment station work to refine technological components for on-farm cropping systems experiments in 1981. In spite of personnel turnovers and lack of continuity, the La Esperanza region has the necessary ingredients for adapting the research methodology gained from the Comayagua experience to local on-farm research. In addition to PNIA on-farm research, similar activities are being realized in the La Esperanza region by the Frontier Development Project financed by the Swiss government. In 1979 this project realized 25 on-farm experiments on eight farms.

The most recent extension of the PNIA methodology through the spread of Comayagua in-service training graduates occurred in the Litoral Atlantico Region in 1980. Because of the lack of an experiment station in this region and a very recent history of organized research, the new researchers were assigned to subregional extension service offices out of which they were to work as half-time researchers and half-time extensionists. Much of the first year's activities were concerned with subregional socio-economic characterization and diagnostic analysis to identify the factors limiting agricultural production and define ecological zones and establish research priorities. The research teams complete dependence on the national commodity projects for seed and experimental designs for regional variety trials did not allow adequate testing over all ecological regions or seasons. If the communication problems with the commodity programs, as well as mobility and material supply problems, can be resolved, priority should be given to this region because of its great agricultural potential.

Conclusions

The foregoing analysis of the PNIA research effort indicates that on-farm research is becoming accepted as essential to the agricultural research process in testing new varieties and generating improved technologies for the target population, i.e., the small traditional farmers and the agrarian reform groups. Most of the commodity researchers consider on-farm work as an important phase of their research. The on-farm researchers are depending more and more on the commodity researchers and involving them in the field activities. Consensus as to the methodology for conducting on-farm research has not yet been reached. But the sharing of on-farm research experiences is helping to formulate a distinctive PNIA methodology (see Appendix E).

The on-farm research capability of PNIA that is developing is not exactly that which was envisioned in the Project design. The intent of the Project was to train multidiscplinary teams to conduct on-farm research. Experience has shown that what is needed are not teams but individuals trained to do on-farm research. Supporting these individuals, a multidisciplinary team is needed to provide assistance in the diagnostic, testing, or analytic stages of on-farm research. The technical support unit (UNAT) is in fact the multidisciplinary team which responds to the specific needs of individuals doing on-farm research. The research stations then do not have to "support multidisciplinary teams" as prescribed in the project design but rather the

commodity specialists should work with the individuals who are doing on-farm research which includes their specific commodity. To some extent this is already occurring and gradually becoming a standard operating procedure.

For PNIA to conduct on-farm research in all seven regions, at least 28 people need to be trained and hired. PNIA has developed the capacity to train on-farm researchers at the rate of eight per year. The GOH has not created new positions within PNIA to absorb these graduates. Some have been contracted but this is a tenuous arrangement with no assurance of employment beyond a year. If the Project is to achieve its purpose, i.e., to expand Honduras' agricultural research capacity to alleviate the technological constraints faced by small traditional and agrarian reform farms (I, 3), the GOH must create six to eight positions a year until a minimum of 28 on-farms research positions are filled.

Since the present budgetary crisis precludes the creation of new positions, every effort should be made to renew the contracts with those individuals who have already been hired under this mode and to obtain funding from outside sources so that this year's graduates of the on-farm research training program can be contracted. This should be seen, however, as a temporary solution of a problem which will only be resolved by the creation of direct-hire positions once the present crisis has passed.

On-farm research can only be conducted in fields representative of the different farming conditions of the areas. This means that the researchers need reliable transportaton to reach their test sites. This usually requires four-wheel traction vehicles which can penetrate areas away from paved roads and can carry the necessary inputs for the locals. Operating and maintaining these vehicles adds to the costs of conducting on-farm research. Funds have evidently been insufficient to allow the on-farm researchers the mobility required to do their work efficiently. Unfortunately, PNIA's current operating budget has been drastically reduced. Unless resources are available to mobilize adequately the researchers, the on-farm testing will be severley curtailed.

VI. RECOMMENDATIONS

The following recommendations are based on the premise that the GOH is committed to allocate sufficient resources to PNIA in order to conduct effective agricultural research. This means that the GOH will have to increase the number of direct hire professional positions to at least 78 (See I, I p 51.). An increase of six to eight professionals a year is feasible considering the in-service training capacity of the UNAT. Increasing the number of staff, however, would require proportionally greater increases in PNIA's budget as compared to the budgets of other programs. The GOH's commitment, therefore, would mean that research is given a high priority in the SRN.

The tenuous situation of the transitional government and the general economic malaise make it difficult to obtain such a commitment at this time. Some assurance must be found, however, before reprogramming decisions are made regarding the funds remaining in the Project. One way to obtain this would be to develop a long range plan which would show what has to be done, how it will be done, and what resources are needed to carry it out. The approval or at least concurrence by the Minister of SRN would suffice until a more formal commitment is obtained. Preparing a plan would require two to three months time. The decision has to be made now, however, because the research cycle is about to begin. Another way, therefore, would be for the SRN to resolve the issue of the unsigned personnel contracts. By renewing or issuing contracts equal or greater than the number that were negotiated last year with PNIA researchers, the GOH would indicate its present commitment to the research program. On the basis of this, reprogramming decision could be made.

The decisions that should be made now in order to maintain the momentum of the research relate to a) provision of logistical support to the on-farm researchers, b) reorganization of the UNAT, and c) assistance to the commodity researchers so that they can more effectively respond to farmers' needs as identified through on-farm work.

Logistical Support for On-Farm Researchers

For the researcher to conduct on-farm research, it is essential that he have operating expenses to maintain and use a vehicle, to cover per diem, and to conduct farm trials (hiring of day workers, purchase of inputs, tools). The current PNIA budget has been severely curtailed on these items.

Recommendation: The team recommends that funds from the AID project be used to provide logistical support to the on-farm researchers up to that amount which PNIA is providing.

Reorganization of Technical Support Unit

Effective on-farm research requires multidisciplinary technical support. The UNAT should be reorganized. A minimum of six disciplines should be represented in the unit including plant pathology, entomology, agricultural economics, biometrics, soil management, and weed control. They should be located in that zone where they can do their most effective work but should meet regularly to help plan, direct, and evaluate the problem. These positions should be filled as soon as possible. PNIA should determine the

qualifications of each of these specialists and begin recruiting. Preference should be given to Honduran technicians. If they are not able to be attracted to the program because of remunerative problems, foreigners should be approached.

Recommendation: It is recommended that AID funds be used to contract personnel for the UNAT. The salaries for Honduran and foreigners should be comparable, based of course on training and experience. Also logistical support should be provided so that the members of the unit can respond to requests outside the region where they are assigned. The amount of logistical support should not excede the contribution of the GOH. The UNAT should prepare an in-service training program indicating the kinds of courses, the number of participants and the duration. It is recommended that AID funds be used to cover the total cost of the training program. Also it is recommended that equipment needed by the specialists be procured and vehicles be purchased or repaired to provide them with adequate mobility.

Enhancing Commodity Research's Responsiveness

In order to effectively generate new varieties in response to the needs of the farmers, the plant breeders require laboratory equipment. For example, both the rice and maize breeders based at the Guaymas station have no equipment in their laboratories. This lack of laboratory facilities greatly impedes their work. Short term technical assistance should be used to identify the minimum essential equipment for the breeders.

Recommendation: It is recommended that the equipment be purchased but only after careful coordination with other international donors who are supplying similar type resources to PNIA.

In addition, the plant breeders in Region 3 (San Pedro Sula) are using a micro-computer which was purchased with PNIA funds. They have a few software analytical programs and are making limited use of the computer. They would benefit from some technical assistance to assess their needs, develop other software and make contacts with others using micro-computers to analyze agronomic and economic data.

Computer facilities should also be established in Region 2 (Comayagua). These two regions (San Pedro Sula and Comayagua) have the necessary infrastructure (electricity) and technical personnel for documenting and recording experimental data. Training in statistical and economics analyses, data interpretation, and research documentation can be built around these facilities. Computers on the order of the Hewett-Packard 9815A with Impact Printer 9871A would facilitate a move rapid analyses of data.

Recommendation: The team recommends that short-term technical assistance be provided to assist PNIA researchers to develop new programs and acquire appropriate equipment.

Long and Short Range Planning

The effectiveness of the AID funds will depend on the planning capability of PNIA. The annual operational plans are insufficient. There are no long range plans. Planning has not yet been institutionalized in PNIA. A planning system needs to be developed which takes into consideration the particular

situation of PNIA and the human resources available. The system should be approved by the oppropriate authority and implemented. It should be a simple system. For example, the long range plan would consist of ten year quantifiable objectives and the global budget for each of the next ten years. An intermediate plan would coincide with the sectoral five year plan, would have quantifiable objectives, and be budgeted by line items for each of the five years. Annexed to the five year plan would be a staffing projection by specialization. The annual operational plan would fit into these plans and would be detailed as to activities, personnel, and budget. The annual plan should include monitoring and evaluation.

Recommendation: It is recommended that the appropriate authority in the SRN require the PNIA prepare these plans for his review not later than August 31, 1981. It is also recommended that long term technical assistance be obtained in designing a planning system for PNIA and in developing long, medium, and short term plans. A sub-contract with an international center such as CATIE, CIMMYT, or CIAT may be the easiest way to procure these services.

Secondary Recommendations

As a final note, the evaluation team suggests a number of recommendations which we believe would improve the efficiency and effectiveness of the on-farm research work.

a. On-farm research should stake out (at harvest) and measure a given section of the farmer's crop rather than attempt to simulate farmer technology as an experimental treatment. These measurements should be made as close to the experimental area as possible and relicated according to the number of replications involved in the experimental design.

b. Statistical analyzes should be made on similar experiments on a regional level (i.e. over many site and years). Economic area analysis should also be attempted.

c. Commodity programs should stick to varietal improvement and leave agronomic component tailoring to regional on-farm researchers (i.e. no more packaged experiments radiating out of experiment stations for PROMYF style evaluation).

d. Forage value of sorghum in maize and sorghum systems should be studied from crop-livestock FSR perspective. Less emphasis should be placed on irrigated grain sorghum for commercial grain production and more should be placed on optimizing economic returns from grain/feed mixture.

e. Commodity Program directors should be assigned a full-time assistants to be trained in conducting and supervising on-station research, so that the directors are free to travel in other regions and participate more directly in on-farm research. Provisions for travel expenses must also be considered.

f. UNAT Technical Assistance should be decentralized to improve backstopping of both commodity and on-farm research and enhance the multidisciplinary concept of PNIA methodology.

g. Trainees should be trained in the region where they will eventually be assigned. They should also be required to write up experimental results as practice for future documentation.

h. Experiments in which there were statistically significant differences between treatments should be given special attention. In the past, too much time was spent on experiments in which there were inconclusive results or in which it was impossible to control experimental variables. Stress the idea that the number of experiments conducted over time is not as important as quality of the information derived from the experiments.

i. Soil analysis is necessary for accurate interpretation of fertilizer experiments. Fertilize trials should focus on response to an individual fertilizer element rather than a formula.

j. At the risk of diluting the PNIA effort nationally, the support of the non-basic grain commodity programs (yucca, vegetables, soybeans, sesame, etc.) is essential if FSR is to provide alternatives to break the vicious cycle of "basic grain production poverty."

k. A study should be conducted to determine the economic importance of Cenicilla, Babosa, Soil Conservation, and Post-Harvest Grain Loss.

l. PNIA should closely supervise the research which is underway in the integrated rural development projects of Guayape, PRODERO, and Marcala. PNIA may be able to benefit by technical assistance funded by these projects.

m. Scholarship for commodity program personnel should be awarded (screened and approved) by PNIA headquarters and not unilaterally by commodity programs in conjunction with the International Centers.

n. Emphasis should be put on evaluating the characteristics and stability parameters of native crop varieties.

APPENDIX A

WRITTEN MATERIALS AND DOCUMENTS REVIEWED BY EVALUATION TEAM

I. BACKGROUND DOCUMENTS

1. IADS, Agricultural Research in Honduras - Tegucigalpa, 1978. 100 pp.

2. E.J. Wellhqusen, A Review of Proposed Agricultural Research and Development Programs in Honduras, Dec. 8 and 9, 1977.

3. USAID, Agricultural Research Project Paper - Honduras USAID - 1978. 50pp.

4. SRN-PNIA, Programa Nacional de Investigacion Agropecuaria, Documento Basico (Modificado 1980) 1979-1983 32 pp.

5. USAID-Honduras, Agriculture Sector Assessment for Honduras, August 1978.

6. USAID-Honduras, Ag. Sector Assessment for Honduras, Annexes.

7. USDA-Ag. Attache Report. Honduras Agricultural Situation 1980-1981.

8. USAID-Small Farmer Cropping Systems-CATIE Project Impact Evaluation #14, 1981.

9. Clark, Joe (ROCAP Regional Economic Advisor), Honduras: Macro-Economic Assessment, November 20, 1980 30 pp.

10. CONSUPLANE - Plan Nacional de Desarrollo Agropecuario, 1979-1983.

11. P.N.U.D. (Programa de las Naciones Unidas para el Desarrollo) Informe Sobre la Asistencia Tecnica y Financiera Otorgada a Honduras Durante 1979, Julio 1980.

12. Secretaria de Recursos Naturales, Diagnostico de Granos Basicos, Tegucigalpa, Honduras, Diciembre 1979, 280 pp.

13. Secretaria de Recursos Naturales, Programa Nacional de Granos Basicos Tegucigalpa, Honduras, Marzo, 1980, 80 pp.

14. Secretaria de Recursos Naturales, Plan de Trabajo para la Ejecucion Del Programa Nacional de Granos Basicos, para el ano 1981. Tegucigalpa, Honduras, 6 de abril de 1981 26 pp.

15. Secretaria de Recursos Naturales, Departamento de Planificacion Sectorial. Resumen Estadistico Agropecuario, 1960-1976 Tegucigalpa, Honduras 1977 180 pp.

16. PNIA Annual Operational Reports - 78, 79, 80, 81.

17. SRN - Proyecto de Investigacion y Extension Agropecuaria - Modificationes al Informe Inicial para el Prestamo BID-555/SF-HO. Tegucigalpa, Honduras, Junio 1980.

II. TRAINING DOCUMENTS

1. Alvaro Diaz, Un ano de Trabajo en Ensayos de Finca y una Experiencia de Capacitacion en Servicio en el Programa de Investigacion Agropecuaria, 3/32/79.

2. SRN-PNIA - Unidad Central, Manual de Actividades de Capacitacion en Servicio, Comayagua, 1980 (Resumen de experiencias de capacitacion durante 1978 y 1979), 12 pp.

3. Mario Nunez y Alvaro Diaz, Informe Anual de Capacitacion en Servicios, Tegucigalpa, Dec. 1980, (Para el ano 1980), 57 pp.

4. SRN-PNIA - Unidad Central, Proyecto de Capacitacion en Servicio del PNIA para 1981, Tegucigalpa, Dec. 1980 10 pp.

5. Dan Galt, Memorando para Mario Contreras sobre Metodologia de la Investigacion.

6. SRN-PNIA, Guia Metodologica para Investigacion en Finca, 1979.

7. Miriam Narvaes, Registros en Finca, Septiembre 29, 1980.

III. PNIA ADMINISTRATIVE MEMORANDA AND OPERATIONAL PLANS

1. Secretario de Agricultura - Honduras, Memorando: Reestructuracion del Programa de Investigacion Agropecuaria, Feb. 17, 1978.

2. Antonio Ramon Silva, Memorando No. PNIA-179-80: Problemas Que Requieren Una Pronta Solucion. 24 de Octubre, 1980.

3. Varios Tecnicos del PNIA, Memorando No. PNIA-202-80: Propuesta De Reestructuracion Del Programa Nacional De Investigacion Agropecuaria, 20 de Noviembre de 1980.

4. Miguel Angel Bonilla, Sub Secretario, Memorando No. SS-092-81: Definicion del PNIA. 20 de Febrero de 1981.

5. Antonio Ramon Silva, Memorando No. PNIA-055-81: Implementacion Memorando No. SS-092 Del 20 de Febrero de 1981. 9 de Marzo de 1981.

6. Bonilla - Oleson letter, 9/11/81. USAID Project files.

7. Oleson - Bonilla letter, 27/11/81. USAID Project files.

8. Silva - Oleson letter, Dec. 1980, USAID Project files.

9. Janssen - Silva letter, February 1981, USAID Project files.

10. USAID Cable: Evaluation of Project No. 522-0139. Feb. 1981.

11. DSB Evaluation Team - Scope of Work for Evaluation/Case Study - Honduras.

Agricultural Research Project No. 522-0139. April 1981.

IV. RESEARCH/EXTENSION LINKAGES

1. Waugh y Crisostomo Modelos de Transferencia de Tecnologia Agricola, presentado en el Curso de Arroz, Guaymas 17 Marso, 1981.

2. Waugh y Crisostomo - Calendarios de Ejecucion de Seminarios y Talleres en Olancho, 27 Marzo, 1981.

3. Ing. Julio San Martin (Extensionista Agricola) Documento Informativo sobre Cenicilla En Maiz y Sorgo, Febrero, 1981, Olancho.

4. Enlace Tecnologico Entre Investigacion y Extension, pp. 5 (from Waugh's Document: Calendario de Ejecucion de Seminarios y Talleres — Danli).

5. Proyecto de Enlace Tecnologico Entre Investigacion y Extension en la Region de Olancho, DAR No. 1980, 3 March, 1981, 6 pp.

V. CENTRAL SUPPORT UNIT REPORTS

1. Torchelli y Narvaez, Los Granos Basicos en su Aspecto Economico (Version Preliminar), Tegucigalpa, enero, 1980, 100 pp.

2. Nicolas Mateo, Programa Anual de Actividades para 1980, Obervaciones y Comentarios.

3. SRN-PNIA, Funcionamiento del Programa Nacional de Investigacion Agropecuaria y su Integracion en su Sistema Tecnologico, Tegucigalpa, Honduras, Sept. 1980, 115 pp.

4. Nicolas Mateo, CIID-SRN-CATIE. Informe Final sobre Proyecto Sistema de Cultivos en Honduras, Comayagua, Honduras Mayo 1, 1980 24 pp.

5. Robert Waugh - El Desarrollo De La Investigacion Agricola En El Sector Publico De Honduras, 25 de Abril de 1981. 13 pp.

6. SRN-PNIA, Trabajos y Ensayos de Finca; 1978 (1979), Comayagua, 1979.

7. Miriam Narvaez, Analisis Economico: Registros de Finca, Comayagua Ano Agricola 1979/80. SRN-PNIA, June 1980.

8. Miriam Narvaez, Continuidad de los Registros en Finca. Memo # 51 to Adan Bonilla. Sept. 8, 1980. 7 pp.

VI. RESULTS OF INFORMAL AND FORMAL SURVEYS

1. Alvaro Diaz y Joshua Posner, "Plan Indicativo de Investigacion Agropecuaria a Nivel Nacional" (Perspectiva de 5 y 10 anos) Tegucigalpa, 1978, 34 pp, (draft).

2. Fernandez, Ordonez, Ramos y Peairs, Diagnostico del Cultivo de Frijol en tres Regiones de Honduras, 1978.

3. Mateos, Diaz y Nolasco, El Sistema Maiz y Maicillo en Honduras, 1980.

4. PNIA - Olancho Region. Resultados del Sondo Hecho en Tres Areas de la Region de Olancho, 1981 pp.

5. Robert. D. Hart. Caracterizacion Inicial de la Region de La Esperanza, Intibuca, Honduras. Turrialba; Costa Rica 1980, 81 pp.

6. Mario Contreras, Metodologia de la Investigacion, (memo de D. Galt), 8 pp.

7. D. Galt, Resumen de Las Encuestas de Comayagua, 1978, 30 pp.

8. SRN-PNIA UNAT, Analysis y Resultados de las Encuestas sobre Preparacion de Suelos en La Paz, y Consercacion de Suelos en El Rosario, Comayagua, Tegucigalpa 1979. 37 pp.

VII. RESEARCH RESULTS

1. See V (5).

2. Frank Peairs, Informe Tecnico (Parte 1) de Sistemas de Produccion en la Zona de El Rosario, Comayagua, 1979. 31 de enero, 1980. pp. 8.

3. Juan Aeschlimann, Informe Anual, 1979. 31 de enero, 1980. pp. 8, (Memo No. 258-80 PNIA).

4. D. Galt, Resumen de las Encuestas de La Esperanza, Intibuca, 1978, 10/79.

5. SRN-DARNO, Raul Valle, Ensayos de Cero Labranza, 27 febrero, 1981.

6. Leonel Sanchez y Roberto Aleman. Resumen de Los Resultados Obtenidos en el Campo Experimental y Fincas de Agricultores Durante los Anos 1979-1980 en el Cultivo de Arroz. pp. 18.

7. SRN-PNIA, Hector Fernandez, Reg. Control Oriental. Informe Anual de Labores, 1978, Danli 1979.

8. Robert Hart. Las Primeras 24 Semanas de un Estudio de Caso en Yojoa - Honduras y un Sistema de Finca en Yojoa, - Honduras: Informe Preliminar, CATIE - Turrialba, CR, 1977. 18 pp.

9. Rodreguez, Roduel Hector Aguiles, Carlos Bonilla 1980. Subproject Maices Precoces y Resistencia a Cenicilla, Informe Final 1979.

10. Evaluacion de Varieda des Resistentes a Cenicilla en Dos Localidades de la Zona de La Paz.

11. Evaluacion de Niveles de Nitrogeno (Procedente de dos fuentes) y Fosforo en Maiz - 3 localidades de la Zona de La Paz.

12. Bonilla, Carlos and Rodeuel Rodriguez. 1980. Subprojecto Marces para Regiones de Precipitacion Marginal y Control Integral de Cenicilla, 25 pp.

13. Evaluacion del Insecticida Mefosflan (Cytrolane) en el Control de la Babosa La Paz. 3 pp.

14. Evaluacion de Dos Ensayos de Arreglas Espaciales x Fertilizacion y Marejo del Sorgo en la Canicula de la Zona de Lejamani. 5 pp.

15. Evaluacion de Variedades de Arroy en Tres Localidades de la Zona de San Jeronimo 1980 5 pp.

16. Evaluacion de Niveles de Fertilizacion en Tres Localidades de la Zona de San Jeronimo 1979. 4 pp.

17. Evaluacion del Control Quinico de Maleyas en Arroz por Espaciamiento entre Hileras en Dos Localidedes de San Jeronimo. 4 pp.

18. Evaluacion de Variedades Recolectadeas en el Valle de Comayagua. 1979.

19. Rendimento y Caracteristicas de 14 Variedades Precoces Evaluadas en la Estacion Experimental de Comayagua.

20. Rendimiento y Caracteristicas de 10 Variedades Precoces en Los Mangós, Comayagua.

21. Rendimiento de 25 Variedades de Maiz Evaluadas en Tres Techas de Siembra sen la Estacion Experimental de Courayagua.

22. Porcentage de Plantas Enfermas de Cenicilla Encontradas en 5 Teches de Siembra Diferentes en la Estacion Experimental de Comayagua.

23. Reaccion a Cenicilla de Materiales Arangados de Guatemala.

24. Reaccion a Cenicilla de Fuentes de Resestencia.

VIII. EVALUATIONS AND CONSULTANT END-OF-TOUR REPORTS

1. SRN-PNIA, Evaluacion de Programa Nacional de Investigacion Agropecuaria, Feb. 1980 Informe de la Comision Evaluadora, Waugh, Laird, Martin, Fumagalli, and Ruiz.

2. USAID-Honduras, Project Evaluation Summary - Honduras Agricultural Research Project, Feb. 1980.

3. Joshua Posner, Informe Final de Trabajo, Nov. 6, 1979 7 pp.

4. Juan Carlos Torchelli, Informe Final del Especialista en Analisis Economico, Convenio SRM-IICA-IDA-628-HO Tegucigalpa, Dec., 1980 8 pp.

5. Franklin E. Rosales, Situacion (DIAGNOSTICO) del Sistema Nacional de Investigacion Agronomica en Honduras, San Jose, Costa Rica, Dec. 1980 25 pp.

6. Alvaro Diaz, Informe Final - Convenio SRN-IICA-IDA-628-HO Area de Investigacion Agricola, (periodo abril 1979 - Dec. 1980).

7. Dan Galt - Final Report on Work in Honduras 12/79 11 pp.

8. Frank Peairs. Resumen Trimestral de Actividades. Oct.-Dic. 79 Comayagua 14 Dic. 1979. 4 pp.

IX. CURRENT PROPOSALS AND DIAGNOSTIC DOCUMENTS

1. USAID-Telegram - Evaluation of Honduras Agricultural Research Project Terms of Reference.

2. SRN-PNIA, Ejucucion Plan Financiero - Convenio de Donacion AID 522-0139, Tegucigalpa, March 31, 1981 6 pp.

3. Roduel Rodriguez, Coordinador Unidad Central PNIA, Propuesta para Reorganizacion de la Unidad Nacional de Apoyo Tecnico UNAT Comayagua, April 11, 1981 10 pp.

4. Carlos Crisostomo - Proyecto de Enlace Tecnologico entre Investigacion Agropecuaria, Abril, 1981.

5. Antonio Silva, Lineamientos Generales del Programa de Investigacion Agropecuaria, Abril, 1981.

6. Hector Aguilar (Coordinador Regional Litoral Atlantico) Un Nuevo Enfoque Metodologico para la Investigacion Regional en el Litoral Atlantico. Abril, 1981.

7. SRN - Direccion Agricola Regional # 4.
Coordinacion Regional de Investigacion Agricola, Elaboracion de Proyectos de Investigacion. Without a date, although probably in 1981.

APPENDIX B

LIST OF PERSONS CONTACTED DURING THE EVALUATION

Name	Position	Location
Miguel Angel Bonilla	Vice Minister, SRN	Tegucigalpa
Jose Montenegro	Special Assistant to the Minister	Tegucigalpa
Antonio Silva	Chief, PNIA	Tegucigalpa
Norberto Urbina	Sub-Chief PNIA	Tegucigalpa
Mario Contreras	Former Chief, PNIA	El Zamorano
Miguel Angel Avila	Director of Personnel, SRN	Tegucigalpa
Jaime Villatoro	Administrator, PNIA	Tegucigalpa
Robert Waugh	PNIA Advisor, Rockefeller Foundation	Tegucigalpa
Carlos Crisostomo	PNIA Technical Advisor	Tegucigalpa
Alvaro Diaz	Former Head, PNIA/UNAT, Training Program	Tegucigalpa
Miriam Narvaez	Economist, PNIA	Tegucigalpa
Maria Magdalena Garcia	Sector Planning, SRN	Tegucigalpa
Francisco Zepeda	Sector Planning, SRN	Tegucigalpa
Rafael Martinez	Chief, Seed Processing, PNS	Tegucigalpa
Julio Rolando Giron	Honduran Institute of Agricultural Marketing (IHMA)	Tegucigalpa
William Janssen	RDO/USAID/Honduras	Tegucigalpa
Charles Oberbeck	Agricultural Research USAID/Honduras	Tegucigalpa
Howard Steele	Marketing Coordinator USAID/Honduras	Tegucigalpa
Luis Zelaya	Planning USAID/Honduras	Tegucigalpa
	Director, Human Resources, SRN	
Francisco Rodas	Director, Region 2	Comayagua
Roduel Rodriguez	Coordinator, UNAT, PNIA	Comayagua
Nicolas Mateo	Resident Advisor, CATIE	Comayagua
Gerardo Reyes	Research Coordinator, Region 2	Comayagua
Juan Aeschliman	On-farm Researcher, La Paz	Comayagua
Gerardo Petit	On-farm Researcher, El Rosario	Comayagua
Jorge Luis Hernandez	Supervisor, Farm Records, San Jeronimo	Comayagua
Lidia de Carranza	Supervisor, Farm Records, El Rosario	Comayagua
Ventura Calderon	Farmer, El Rosario	Comayagua
Tulio Donaire	Farmer, El Rosario	Comayagua
Hermogenes Castaneda	Farmer, El Rosario	Comayagua
Leonardo Machado	Farmer, El Rosario	Comayagua
Juan Isaula	Farmer, La Paz	Comayagua
Gustavo Angel Barriaga	Farmer, Asentamiento Piedras Azules San Jeronimo	Comayagua
Concepcion Barreda	Farmer, Asentamiento San Antonio de de la Cuesta	Comayagua

Humberto Padilla	Farmer, San Antonio de la Cuesta	Comayagua
Maximo Santos	Farmer, San Antonio de la Cuesta	Comayagua
Antonio Lezama	Farmer, San Antonio de la Cuesta	Comayagua
Rigoberto Nolasco	Chief, Sorghum Project (now studying)	Comayagua
Jorge Trejas	Research Coordinator - La Esperanza	La Esperanza
Johann Sleber	Harvest Technology Project, Swiss Government	La Esperanza
Alfredo Montes	Horticulturist, CATIE	La Esperanza
Franklin Osorio	Biometrician IHCAFE	La Esperanza
Florencio Arriaga	Farmer, La Esperanza	La Esperanza
David Aguilar	Chief, Potato Project	La Esperanza
Robert Paz	Director Region 3	San Pedro Sula
Juan Jose Osorto	Chief, Corn Project	San Pedro Sula
Napoleon Reyes Discua	National Director, Rice Project	San Pedro Sula
Elio Duron	Research Coordinator, Region 5	Olancho
Mario Nunez	Former Training Coordinator UNAT, PNIA	Olancho
Leonel Sanchez	Agronomist, PNIA	Olancho
Fausto Caceres	Director, Region 6	Danli
Federico Ramos	Chief, Bean Project	Danli
Hector Aguilar	Research Coordinator Region 5	La Ceiba
Mario Palmas	Agronomist, PNIA	La Ceiba
Jose Maria Torres	Agronomist, PNIA	San Pedro Sula
Fernando Wu	Rice Specialist, China Mission	San Pedro Sula
David Hall	Peace Corps Volunteer, Rice Project	Guaymas
Gordon Straub	Extension, USAID/Honduras	Tegucigalpa
Stephen Wingert	Deputy RDO, USAID/Honduras,	Tegucigalpa

APPENDIX C

TABLES

1. Honduras Corn Imports and Exports: 1965-1981
2. Honduras Bean Imports and Exports: 1965-1981
3. Honduras Rice Imports and Exports: 1965-1981
4. Honduras Sorghum Imports and Exports: 1965-1981
5. PNIA Research Plan for 1977
6. PNIA Research Plan for 1978
7. PNIA Research Plan for 1979
8. PNIA Research Plan for 1980
9. PNIA Research Plan for 1981

Table C1. Honduras Corn Imports and Exports: 1965-81
In Metric Tons

Years	Imports (1)	Exports (2)	Balance (2) - (1)
1966	1,105	44,757	+ 43,652
1967	802	25,456	24,654
1968	1,969	44,168	42,199
1969	223	14,724	14,501
1970	384	15,013	14,669
1971	378	13,252	12,874
1972	2,922	8,294	5,372
1973	309	1,645	1,336
1974	368	213	- 155
1975	42,986	195	-42,791
1976	665	17,447	16,782
1977	12,813	516	-12,287
1978	26,302	-	-26,302
1979 1/	7,469	379	- 7,090
1980 1/	64,118	1	-64,118
1981 2/	70,000	-	-70,000

Source: Anuario de Comercio Exterior, D.G.E.C.: Quoted in (1-12, p. 56)

1/ Central Bank Economic Analysis Division
2/ Estimate by U.S. Agricultural Attache Report, Jan. 31, 1981 (I-7)

Table C2. Honduras Bean Imports and Exports: 1965-81
In Metric Tons

Years	Imports (1)	Exports (2)	Balance (2) - (1)
1966	731	16,497	15,766
1967	109	16,646	16,537
1968	61	21,778	21,717
1969	48	17,812	17,764
1970	2	9,268	9,266
1971	3	12,387	12,384
1972	4	10,842	10,838
1973	172	989	817
1974	97	6,133	6,076
1975	386	3,373	2,987
1976	4	-	- 4
1977	151	-	- 151
1978	2	-	- 2
1979 1/	324	30	- 294
1980 1/	2,802	-	-2,802
1981 1/	7,000	-	-7,000

Source: Anuario de Comercio Exterior, D.G.E.C: Quoted in (1-12, p. 58)

1/ Central Bank Economic Analysis Division
2/ Estimate by U.S. Agricultural Attache Report, Jan. 31, 1981 (I-7).

Table C3. Honduras Rice Imports and Exports: 1965-81
In Metric Tons

Years	Imports (1)	Exports (2)	Balance (2) - (1)
1966	7,916	170	- 7,746
1967	4,033	234	- 3,799
1968	7,258	2,080	- 5,178
1969	9,142	30	- 9,112
1970	9,703	-	- 9,703
1971	2,521	-	- 2,521
1972	4,030	-	- 4,030
1973	2,064	-	- 2,064
1974	1,269	-	- 1,269
1975	11,081	-	- 11,081
1976	1,344	-	- 1,344
1977	5,028	-	- 5,028
1978	8,337	-	- 8,337
1979 1/	5,734	-	- 5,734
1980 1/	4,078	-	- 4,078
1981 2/	2,000	-	- 2,000

Source: Anuario de Comercio Exterior, D.G.E.C: Quoted in (1-12, p. 59)

1/ Central Bank Economic Analysis Division
2/ Estimate by U.S. Agricultural Attache Report, Jan. 31, 1981 (I-7).

Table C4. Honduras Sorghum Imports and Exports: 1965-81
In Metric Tons

Years	Imports (1)	Exports (2)	Balance (2) - (1)
1966	275.1	-	- 275.70
1967	1,451.4	-	- 1,451.4
1968	285.8	-	- 285.8
1969	46.8	-	- 46.8
1970	434.5	-	- 434.5
1971	5.2	-	- 5.2
1972	4.7	-	- 4.71
1973	23.9	-	- 23.9
1974	5.8	2,463	2,457.2
1975	21.1	-	- 21.1
1976	14.5	8,117	8,102.50
1977	4.1	-	- 4.1
1978	12.9	-	- 12.9
1979 1/	37.0	-	- 37.0
1980 1/	66.0	-	- 66.0
1981 2/	0	-	0

Source: Anuario de Comercio Exterior, D.G.E.C: Quoted in (1-12, p. 60)

1/ Central Bank Economic Analysis Division
2/ Estimate by U.S. Agricultural Attache Report, Jan. 31, 1981 (I-7).

Table C5. PNIA Research Plan for 1977

Research Focus	#Trials by Commodity Program					
	Maize	Beans	Rice	Sorghum	Veg.	Total
Varital Improvement	51	38	49	50	26	214
Agronomy	16	16	19	9	29	89
Total	67	54	68	59	55	303
%Trials on Varietal Improvement	76.1	70.3	72.1	84.7	47.3	70.6

It was not possible to distinguish between on-farm and on-station research from the format of the PNIA Plan Operative Nacional, 1977.

Table C6. PNIA Research Plan for 1978

Research Focus	#Trials by Commodity Program					
	Maize	Beans	Rice	Sorghum	Veg.	Total
Varital Improvement	78	38	69	62	41	288
Agronomy	7	9	15	12	36	79
Total	85	47	84	74	77	367
%Trials on Varietal Improvement	91.8	80.9	82.1	83.8	53.2	78.5

It was not possible to distinguish between on-farm and on-station research from the format of the PNIA Plan Operative Nacional, 1978.

Table C7. PNIA Research Plan for 1979[1]

Research Focus	#Trials by Commodity Program						
	Maize	Beans	Rice	Sorghum	Veg.	Total	%Research Focus
Varital Improvement	87	31	53	35	1	207	37.2
Agronomy: Plant Protection	109	57	50	30	34	280	50.3
On-farm Var. Evaluation	25	3	13	2	0	43	7.7
On-farm Agronomy	16	4	6	1	0	27	4.8
Total	237	95	122	68	35	557	100.0
%Trials on Varietal Improvement	47.3	35.8	54.1	54.4	2.9	44.9	
%Trials On-farms	17.3	7.4	15.6	4.4	0.0	12.6	

1/ It is assumed that Lotes de Comprobacion, Ensayos Regionales, Evaluaciones, and Lotes Demonstrativos as listed in the PNIA Plan Operativo Nacional (1979) refer to on-farm research. Experiments listed as Mejoramiento and Agronomia are considered on-station research.

Table C8. PNIA Research Plan for 1980

Research Focus	#Trials by Commodity Program						
	Maize	Beans	Rice	Sorghum	Veg.	Total	%Research Focus
Varital Improvement	141	11	43	20	6	221	25.8
Agronomy: Plant Protection	141	22	16	20	32	231	27.0
On-farm Var. Evaluation	80	40	41	12	18	191	22.3
On-farm Agronomy	36	39	82	52	3	212	24.8
Total	398	112	182	104	59	855	100.0
%Trials on Varietal Improvement	55.5	45.5	46.2	30.8	40.7	48.2	
%Trials On-farms	29.1	70.5	67.6	61.5	35.6	47.1	

Table C9. PNIA Research Plan for 1981

Research Focus	#Trials by Commodity Program						
	Maize	Beans	Rice	Sorghum	Veg.	Total	%Research Focus
Varital Improvement	87	18	30	21	9	165	14.8
Agronomy: Plant Protection	23	11	11	2	13	60	5.4
On-farm Var. Evaluation	192	103	114	18	4	431	38.6
On-farm Agronomy	200	107	112	15	27	461	41.2
Total	502	239	267	56	53	1117	100.0
%Trials on Varietal Improvement	55.6	50.1	53.9	69.6	24.5	53.4	
%Trials On-farms	78.1	87.9	84.6	58.9	58.5	79.9	

APPENDIX D

ON-FARM RESEARCH METHODOLOGIES

The design and conduct of effective on-farm research presupposes a thorough understanding of farmers' constraints. On-farm research therefore requires data collection and analysis starting before and continuing during on-farm testing. Secondary sources provide the preliminary information. Soundings and surveys are used to gather site-specific information, and farm records give the socio-economic information. Importantly, these are all continuous data collection processes, because the new interventions will be required to meet the changing production systems.

Diagnostic Methodologies

1. Secondary Data Collection - The definition of a region begins with the compilation of information from secondary sources. The aim of this work is to cull from all availabe sources background material about the area. The topics of interest include farming techniques, yields, soil and rainfall data, topography, farm sizes, labor supply, imput use, market access, and farmer goals. The secondary sources for this information are various: national and agricultural censuses; experiment station records on soils, rain, temperature, and other natural factors, previous research and local histories.

The range of materials used in the preliminary description of a region depends naturally enough on the number of people availabe to review scattered sources. The rport prepared by the small team in Olancho presents typical farm size and number, as well as crop data, from the 1974 agrucultural census, with few other supporting materials. The Comayagua report, which was done by UNAT also used this census to determine where resources were used well and poorly by comparing specific towns to regional and national averages. In addition, agronomic factors - regional rainfall, soil maps - were compiled and used in orientation, but these materials were not included in the published reports. The description of La Esperanza, which involved 25 advanced students from CATIE, by contrast, included not only agronomic information but also materials on the industrial and commercial sectors, government services, urban and rural infrastructure, and other matters.

That only some secondary data are used in the initiation of farming systems research is in part a response to the need to get on with the work. Nonetheless, secondary data compilation can be a continuing process, with available secondary data being pulled together as time and manpower permit. In this regard, no source should be overlooked: agricultural census are a good first start, but climatological data, local histories, and ethnographies should be incororated into the data base. Otherwise, the scope of work of the materials is narrowly limited at the outset to very specific concerns, to number of farms by size and to crops and yields.

2. Soundings and Surveys - Rapid areal assessment complements secondary sources in the definition of regions and their production systems. There are two usual techniques for areal reconnaissance: soundings and surveys. A sounding is essentially a quick, qualitative assessment of production systems

within an area. The survey involves a representative sample and structured interview process for quantitative analysis on a specific topic. This distinction between sounding and surveys has evolved over time, so that what in the beginning were called surveys because they used a simple questionnaire format would perhaps now more properly be considered a sounding.

The aim of the sounding is to delimit homogeneous production area, to determine the most impirtant production systems there, and to define the probable limiting factors to increased productivity. Simply put, a production system is the combination of crops, in association or in succession, that farmers plant is one field in one year. Thus, corn with beans in relay is a system and corn incercropped with beans is another system. A homogeneous region encompasses the same major production systems. Further, topography, soils, rainfall, and temperature patterns - that is production potential - should be generally similar.

This information is collected by reconnaissance teams who note physical attributes, and speak informally with farmers and key informants. In the ICTA sounding method, pairs of interviewers, each with a different disciplinary specialization, canvass different areas each day, returning to a home base each evening to discuss findings. Although the period for the sounding will vary with the number of personnel available, given the territory to be covered, the sounding should be completed within three weeks if it is to serve its primary purpose of rapid areal assessment for the design of trials.

PNIA has conducted soundings in Comayagua, La Esperanza, and Olancho. In all three cases, the regions were preselected, but the zones - San Jeronimo, La Paz, and El Rosario in Comayagua, La Esperanza in Intibuca, and San Francisco de al Pal, Guarizama, and Manto in Olancho - were chosen only after a rapid reconnaissance of the regions was made in conjunction with extension. In each case, the reconnaissance helped define homogeneous zones. In Comayagua, for example, it was at first hoped that the entire area could be considered homogeneous. Trip to Ajiterique, Lejamani, La Paz, Yarumela, Las Flores, Comayagua, San Jeronimo, La Libertad, Agias Saladas, and El Rosario quickly demonstrated the heterogeneity of the area. Thus, for example, Yaramela was not included with La Paz because of different irrigation possibilities.

Within each homogeneous zone, the sounding focuses on agricultural practices. In both Comayagua and Olancho, the Sounding aimed to determine the major production systems and, within those, the management operations and technology of the farmers. Thus the sounding report for Olancho lists the major production systems as corn planted in May and beans planted in separate fields in October. For this syste, the teams inquired into predominant varieties, seed selection procedures or purchase, land preparation, planting techniques (including spacing and number of seeds per hole), weed control, insect control, fertilization, yields, transport and storage. Other systems - corn followed by beans, beans followed by beans, coffee, rice, and a few crops for household use, e.g., yucca, bananas, and sugar cane - were deemed of less importance, either because the system was not common in the area or because of the national emphasis on basic grains. The surveys in La Esperanza followed much this same strategy, but also examined briefly the overall regional economy.

The changing nature of agricultural production somewhat complicates the simple quantitative decision rule about the relative importance of particular cropping systems. To have maximum impact, farming systems research, which aims to fit interventions into ongoing systems, must work with the major cropping systems, defined numerically or economically. The quantitative decision rule, however, implies that what is both was in the past and will be in the future. In many areas, crops that were once extremely important have disappeared completely, while other crops have been introduced. At any point in time, a cropping system that is of minor importance even though it may later come to cominate the local economy. In short, the sondeo, as conducted by PNIA, might include a brief consideration of the succession of crops in an area, which could also serve as an indicator of the receptivity of the farmer population.

The unsystematic nature of soundings make mandatory a random selection process for interviews. In Olancho, four teams of four persons interviewed 78 key informants and farmers in 23 aldeas. This is an important innovation, for key information - storekeepers, truckets, extension agents - provide important information about regional conditions. But the kdy informant strategy cannot be extended to farmer interviews without introducing certain bises. To seek out community leaders for interviews, as the Olancho team recognized in its report, skews the farmer sample toward those producers who have more resources and, likely, distinct production systems. A random sampling process - almost catch as catch can - might better represent the range of farmers and their resources. In this way also, it would be possible to garner a preliminary idea of the manner in which cropping patterns vary with farm size in the area.

These matters of improvement aside, the sounding has well served its primary purpose of narrowing the major problems and possible interventions for field testing. Whereas almost all previous work dealt with field testing varieties of grains and tubers, on-farm work now deals with a wider range of agronomic practices, including crop combinations, planting times, spacing arrangements, fertilizer levels, and weed and insect control, as well as new varieties. These field tests all spring directly from the findings of the soundings, which indicated the major crops and problems and hence the major points of intervention. (See On-Farm Testing, below.)

Surveys are now conducted when quantified information is necessary to determine the prevalence of particular conditions. The aim is to gather information from a large number of farmers on a specifid topic, usually identified during the sounding, in order to assess the prevalence and economic importance of that problem area.

At the outset of the PNIA on-farm program, soundings and surveys were condiered sequential techniques in the determiniation of general conditions. (See figure D-1,) The sounding provided basic information on natural conditions and agricultural practices for areas where little was known. Thus the sounding oriented the design of the survey questionnaire, which would provide the details needed for planning purposes. For example, in Comayagua, once the sounding was completed, a questionnaire was drawn up, discussed in group, and pretested, whereupon the questionnaire was administered in early March. This questionnaire, which was a revision of one used earlier in La Esperanza, had six sections: a face sheet for general information; crops planted and the problems with each crop, the risk of each crop, and the use of

Figure D-1

FARMING SYSTEMS RESEARCH CALENDAR
Comayagua - 1978 (Primera Planting Season)

	January	February	March	April	May	June	July	August	September
1. Preparation of survey instrument	1	17							
2. Conduct of sounding	10	17							
3. Testing of survey instrument		20 25							
4. Modification of survey instrument		22	1						
5. Conduct of survey			6 17						
6. Preliminary analysis of survey data and design of field trials			20 22						
7. Selection of farmers for: a. field trials (4-5/researcher) b. farm records (8-12/researcher)				23 1					
8. Implementation of farm record program			3						March 31, 1979 →
9. Implementation of field trials				1				30	
10. Analysis of survey				15			31		
11. Analysis of farm records to refine field trials				1					March 31, 1979 →
12. Preliminary analysis of field trials to modify next year's design								1	30
Peak labor demands	6 8 survey			1 31 planting	6-10	20-24 field visits	4-8	8-22	1 - 22 harvest

the maize plant in the field; a map of each farmer's three most important plantings; a crop system component, for each of the three crops, with a calendar, planting techniques, input use, and sale; a socio-economic component, including tool inventory, marketing, credit, and attitudes; and, a livestock component treating animals and their diseases. In La Paz, Las Flores, and San Jeronimo, the sample of farmers with less than 50 hectares of land was drawn using maps and farmer lists provided by INA. In El Rosario, which was not included on the INA lists, farmers were selected mostly by the fact that they were at home when the intervieweer went by. Twenty-eight interviews were done in La Paz, El Rosario, and Las Flores; 27 interviews were done in San Jeronimo.

The progression from sounding to survey was thought in the beginning to be ideal, but this methodological strategy was not used invariably. The sondeo, as a series of informal conversations with farmers and key informants, could be eliminated where sufficient background materials were available, as was the case in La Esperanza. Alternatively, the survey could precede the sounding, as happened in Olancho, where the 250 interviews simply overwhelmed the small staff. In fact, only 30 of these interviews, which were done in 1980, have yet been analyzed.

The use of a survey instrument for rapid areal assessment proved problematic for several reasons. First, the sample, even when carefully drawn, is in most cases too small for quantitative tests. Second, the questionnaire proved faulty even though it had been pretested. The information sheet failed to record age of farmer, marital status, number of children, and religion, which can be important factors in the individual's management of his farm. The questionnaire included an item on labor availability by month, but not one on whether the farmer actually hired labor. The maps provided important information, when the interviewer drew them, which was about half the cases. The cropping system section was formatted in a manner better suited for recording information than for eliciting it. And the socio-economic questions were limited to some (but not all) necessary marketing matters, along with a collection of individual items that ranged from whether the farmer worked independently or in a cooperative to whether he would try a new seed or wait for others to demonstrate it.

Third, and most importantly, the use of questionnaires necessitated tabulation and anlaysis of results, which required precious time during the initial stages of the program. The initial analysis of the Comayagua materials, which were collected in March 1978, was limited to determining which were the major cropping systems and problems in each subzone, so that the results could be used in the planning of farm trials for the agricultural cycle beginning in May. A fuller analysis was not completed until more than a year later, and even then, the analysis was limited to a tablulation of responses on each item. There was no attempt to intercorrelate items because the sample was small and the data messy.

In short, the survey approach had no advantages over the sounding approach and also required more time for analysis. For these reasons, soundings have come to be preferred over surveys for preliminary areal assessment.

Surveys can nonetheless provide detailed information on specific topics. To date, three surveys have been conducted: one on land preparation in La Paz

and soil conservation in El Rosario, and one on beans in Olancho and Danli. Perhaps because the surveys focus on particular topics, these analyses appear to treat interrelationshops between particular variables better than the sondeo reports. The land preparation survey, for example, notes that the amount of time necessary for land preparation varies with the extent to which the lands are used as pasture, which in turn affects the likelihood of ownership of oxen, which are important in land preparation. The soil conservation study, to cite another example, found that fertility, more than erosion, consituties a major current constraint on production. Such specialized studies will continue to be necessary to clarify ambiguities in the soundings and to provide detailed information on particular topics.

3. Farm Records: The socio-economic data are obtained from farm records of production activities over an extended period of time. Until the beginning of this year, farmers noted their daily activities on a schedule that was collected and compiled biweekly by a local research supervisor. Such records were maintained in El Rosaio, Lamani, San Jeronimo (Comayagua), La Paz (La Paz), and La Esperanza (Intibuca). A farm record system was attempted last year in Olancho, but failed; it is planned to reinstitute the system there this year.

The format of the original farm register, based on the ICTA model, proved voluminous and difficult. Consequently, the register was revised at the end of 1979. Each crop, as in 1978, is now recorded separately, and measures quantities are given in units common to the zone. Both the original and the present farm register cover amount of labor (hired vs. family) and use of inputs and machinery for each phase of the production process. A final section inquires into the quantity harvested, the amount stored and sold (and price).

This information provides a valuable check on the data collected in soundings and surveys. Actual farm management data permit analysis of technologies used and estimation of the costs of production, including the availability and use of hired labor. Further, over time, continuous series of farm records will facilitate careful assessment of the adoption of new technologies and their costs. Finally, such information is useful to the private and the public sector, particularly in pricing and credit policies. With actual farm record data, public officials and lenders can ascertain the return to particular crops under different combinations of inputs, which information is necessary for a rational planning and credit policy. To be reliable, this information must be gathered through daily record keeping. Recall data, whether gathered in sondeos or surveys, are notoriously incomplete and inaccurate.

To date, the analysis of farm registers has focused mostly on farm accounting, costs of production, and returns per manzana. These are important factors, but not the only ones. For planners it would be helpful if returns were computed per unit of labor, as well as per unit of land. The use of labor (family and hired) might be tabulated or graphed over time, so that periods of critical labor shortage might be pinpointed easily. Further, differences in technical practices might be discussed in terms of land-class size within the independent sector and in terms of independent and reformed sector, as well as in terms of levels of profitability.

The technical and economic analyses have not been well incorporated into the planning process for several reasons. The major findings of the technical analysis essentially duplicate those of the soundings, which provide the information in a much more timely manner. The economic analysis is strictly limited to profitability per unit of land, which may--or may not--be the critical factor for farmers. And, perhaps most importantly, the results are mostly reported in complex tables that themselves require trained analysis, when there is any synthesis of the materials at all.

If the socio-economic studies are to contribute importantly to the development of on-farm research, the analysis of farm records must be broadened and simplified. It is important, particularly for diachroic analysis which is a major value of continuous farm records, that the economic results be analyzed in terms of those social dimensions--family size (labor availability), land-class size, sector--that obtain in the region. The aim is to assess why people have as they do, which implies more than mere profitability. At the same time, the analysis must be reduced to just those factors that correlate with significant differences in the degree of innovation among farmers. The reduction and elimination of redundant factors in analysis will take time, but it will ultimately facilitate the full and clear exposition of results, which today is still wanting.

On-Farm Testing Methodologies

Asside from the incongrous research models which preceeded the forumlation of the latest version of the PNIA methodology, there appear to be two distinct schools of thought within the ranks of PNIA personnel on the research strategies. The first school of thought derives from the commodity programs which view on-farm experimentation as an integral stage of varietal evaluation leading to the release of improved varieties. (See Figure D-2) The opposite point of view is best exemplified in regions such as the Litoral Atlantico, which has no National Commodity Project based in its experiment station. In these regions, on-farm research is the principal means of evaluating technological alternatives, on of whic is the varietal element, toward expanded farm production and income. This does not imply a single step in a larger methodological process, but rather the center stage on which technology is made to answer to the specific needs of farmers ina given sub-region.

The commodity programs attempt to pass through the first four phases of the PNIA Methodological flow chart (See Figure D-3) in no more than three years. That is to say that from initial screening to varietal release to the Seed Multiplication Program is a three year process with one year of on-station and two years of on-farm evaluation. Commercial seed production may require a minimum of one year beyond the research phases before the improved variety actually enters commercial production. Two examples of this procedure refer to the release of the bean variety Acacia 4 and the improvement of husk length in the commercial maize variety Hondurena Planta Baja.

Varietal selections for an improved red bean variety began in 1977 and Acacia 4 was inaguratsd on Septeberm 30, 1980 after a series of on-farm studies in four separate departments of Honduras. Once the on-station screening was complete, regional on-farm trials were begun in 1978 in the second methodological stage of the PNIA flow chart. On-farm validation

Figure D-2: Contrasting Views of On-Farm Research Methodology

1. Commodity Program:

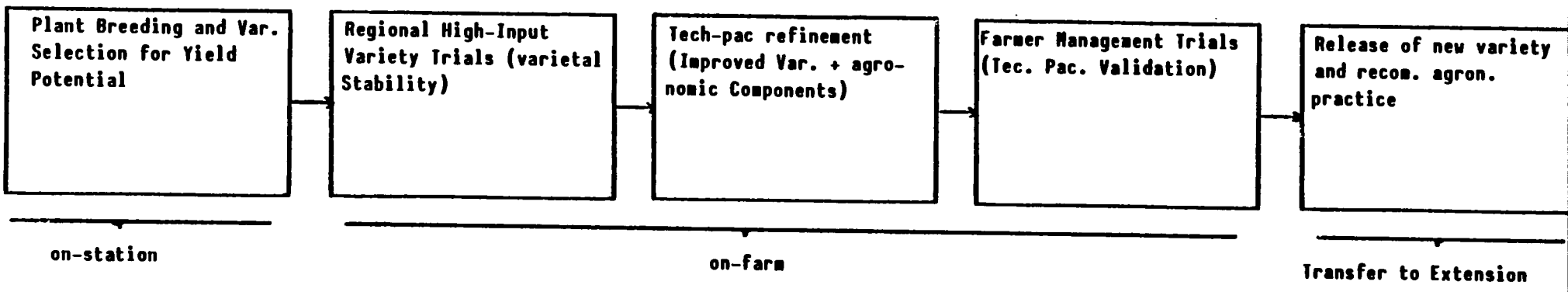

2. Regional (off-station):

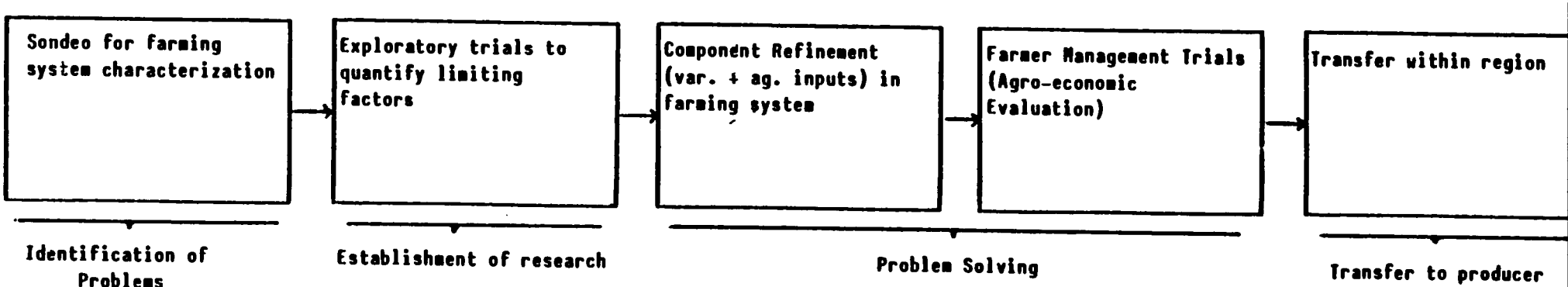

Note: This figure seeks to illustrate a conceptual difference that has not been previously documented. It is in no way an official representation of PNIA methodology.

continued with fewer varietal comparisons in the following stage before larger scale farmer evaluation was begun in late and repeated in early 1980. Results from the farmer trials are presented in Table below. the improvement of husk length on the commercial maize variety Hondurena Planta Baja was slightly more rapid, requiring one year of on-station and one year of on-farm research. Since it was already a well known and commonly used variety, this varietal improvement did not repeat the farm trials stage, going directly from on-farm validation to commercial seed production.

Results from Farmer Trials: Acacia 4 (1979-80)

Name of Farmer	Location	Planting Season*	Area Planted (has.)	Yield (TM/ha.)
1. Jaime Giron	Guarabuqui-Orica	79B	17.5	1.71
2. Jaime Giron	Guarabuqui-Orica	80A	1.4	2.93
3. Leonardo Rodriguez	El Pacon-Danli	79B	8.4	1.57
4. Leonardo Rodriguez	El Pacon-Danli	80A	0.7	2.11
5. Hector Diaz	Talanga	79B	5.6	1.57
6. Ramon Elvir	Valle de Sirea-Francisco Morazan	79B	28.0	1.86

Source: El Tiempo newspaper article dated February 24, 1981.

* A refers to the Primera planting season (June to August) and B refers to the Postrera planting season (October to December)

After the initial socio-economic and agro-ecological diagnosis is completed in regions in which on-farm research teams are working, exploratory trials are conducted to quantify the research priorities which had previouly been identified and to establish a working relationship between farmers, researchers, and extension agents. These preliminary on-farm experiments help to identify technical factors, which are restricting agricultural production. Later on-farm trials examine potential solutions, alternative cropping systems, and new agro-chemical inputs within the farmer's production environment. Since the on-farm research teams are in closer contact with the farmers throughout the process of technological generation, they are much more sensitive to the specific problem and needs of their clients. This results in a greater transfer of information directly to the producer.

On-farm research trials are backstopped by on-station experiments which are generally larger and have more sophisticated experimental designs requiring more complete control over experimental variables. On-farm research in Honduras has used Randomized Block Designs almost exclusively with the

FIGURE D-3 CONCEPTUALIZATION OF THE PHASES OF RESEARCH AND EXTENSION IN THE PNIA PROGRAM - APRIL 1981

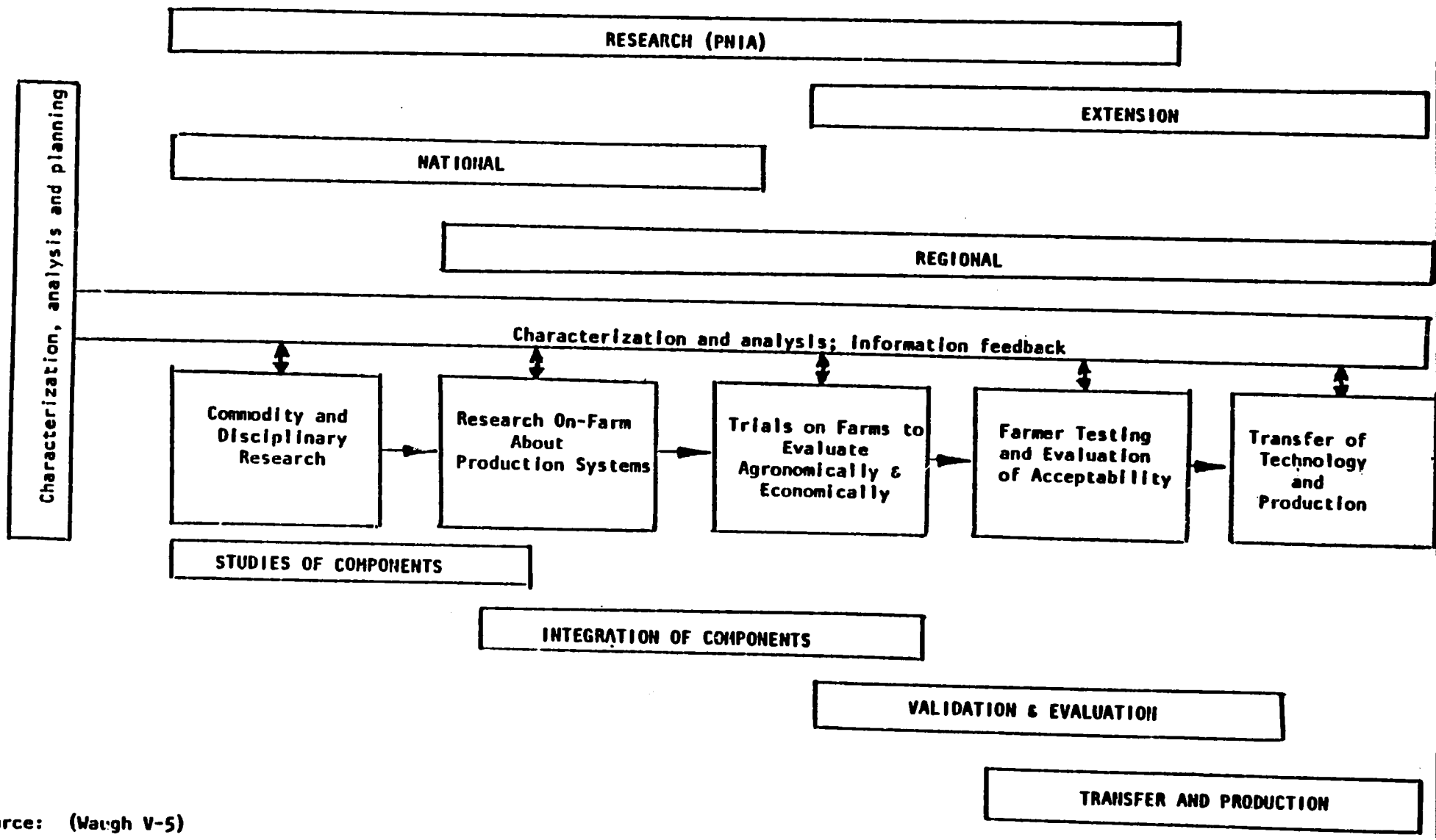

Source: (Waugh V-5)

exception of Factorial Designs for fertilization levels. Plot size and repetitions are held to a minimum under the correct assumption that the repetition of experiments over many sites is more important than large unweldy experiments in a few locations.

APPENDIX E

Progress Towards a Concensus on Methodology

The on-farm research which is conducted in six of the seven regions of the country does not follow the same methodology. But progress is being made in moving toward a concensus of what is the most effective way to identify and solve small farmer production problems. The general methodology is accepted (See Figure 3, Appendix D) but there are differences of interpretation. (See Figure 2, Appendix D.)

At the recent April PNIA annual meeting, interest in discussion the topic was so strong that extra evening sessions were held. This discussion focused on six aspects of the on-farm research process. Both station and on-farm researchers participated. The evaluators concluded that although concensus had not yet emerged, a methodology was evolving from the experiences of field practitioners which would eventually be adequate and appropriate to the Honduran situation.

The following is a summary of the discussion and conclusions reached as captured by the evaluation team:

1. Methodology and the Purpose of Characterization Efforts; The Use of Informal and Formal Survey Methods:

   There was general agreement that the primary purpose of characterization activities is to better identify client groups, their existing technology(s), and the problems with these. These type of activities should utilize as much existing secondary information as possible and avoid lengthy formal data collection, especially in the beginning. Emphasis was also placed on making characterization a dynamic on-foing activity to monitor the effectiveness of research and extension, as well as to monitor technical problems that may arise (i.e. insect infestations, new races of diseas pathogens, genetic degradation of commercial varieties, etc.).

2. Methodology for Identifying Limiting Factors in Agricultural Technology:

   Considerable debate here focused on the effectiveness of the complete Technological Package Minus (or plus) one method in contrast to simple factorial designs based on existing farmer technology.

   The Technology Package Minus One (TP-1) concept originated in the CIMMYT on-farm research strategy that was later incorporated in PROMYF activities. This strategy attempts to quantify the importance of each component of a high-input technology package by holding all other components at a given input level. In this way, an order of importance is established among the individual components (improved variety, fertilizer, insect control, disease control, weed control, planting density, etc.) in relation to their comulative effect on

yields. Thus researchers conclude the relative value of technical inputs in terms of increased income over costs. While this process provides data on which impressive claims are often made regarding the potential impact of a new variety or agrochemical input, it fails to adequately consider factor interaction and can therefore be tremendously misleading.

A similar situation arises when on-farm researchers attempt to evaluate limiting factors by adding individual technological innovations to a given farming system. New varieties in this case may fail, because of very low soil nutrient status, leading on-farm researcher to discard genetic material that might otherwise be potentially productive if fertilizer levels were increased slightly to economically feasible levels. On the other hand, high fertilizer rates introduced as a single experimental variable to an existing farming system may result in excessive vegetative growth of the farmer's variety, resulting in significant yield reduction due to plan lodging. The conclusion here would be that fertilization is not a limiting factor, when in fact correct dosages and application timing might result in significant agronomic and economic returns over cost. PNIA researchers are becoming aware of these experimental errors and are seeking a more efficient means of cross referenceing limiting factor information derived from characterization studies and surveys with that obtained in the more traditional limiting factor experimentation.

3. Stages of the Research Process: Strategies and Experimental Techniques:

As the PNIA researchers arrive at a general consensus on overall methodology, certain details remain unclear. For example, what is the chronological timetable between the individual stages in the methodological structure? How many farmer evaluation trials are necessary in a given region before sufficient confidence in a new technological innovation is secured? How many multilocation trials are necessary to measure varietal stability over sites and seasons? What is the optimum sampling technique and sample size for conducting sub-regional characterization studies? These and other related questions were not thoroughly discussed at the PNIA annual meeting and must await future clarification, once the more basic PNIA operational problems are resolved.

← 4. Use of Yield and Other Parameters to Judge Technology Results:

There was considerable concern that financial return and risk factors be included along with biological yield factors when evaluating trial results. At the same time, varietal improvement trials should stress plan maturity, lodging, insect tolerance, and other selection parameters other than simply yield.

← 5. Short and Long Term Planning:

It is impossible to evaluate the effectiveness and progress of a national research effort without established short-term and long-term

goals such as genetic resistance to a specific disease, chemical control of a given insect, or appropriate crop varieties for common intercropping systems. Technical assessment and regional research goals are as important as commodity program planning. In spite of personnel turnovers and operational limitations, PNIA researchers realize that research continuity is a direct function of long range planning.

6. Extension and Research Relations:

Considerable interest was expressed throughout the conference in developing closer working relations between extension and the on-farm research process. While no formal institutional models for achieving this integration were proposed, it is obvious that progress is being made in the regions on developing more effective working relations. One example of this is in the Litoral Atlantico region where researchers are assigned directly to extension agencies within the region to actively involve extension personnel in sub-regional characterization, problem identification, and on-farm research. In the Olancho region, researchers and extension agents work together in on-farm record keeping as well as in adaptive research.