PD-AAC 159

ISN = 367

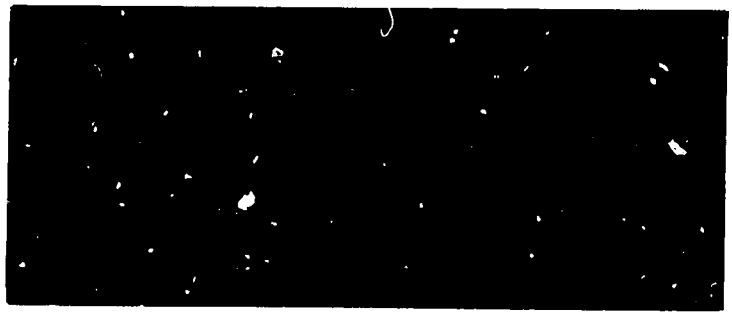

MASI

Multinational Agribusiness Systems Incorporated

PD-AAI-759

5260118005303

PARAGUAY

MINIFUNDIA CROP INTENSIFICATION
PROJECT

AGRIBUSINESS MANAGEMENT REPORT

USAID-CREDICOOP-MASI

Work performed under contract LAC-0118-C-00-1026-00

January 13, 1982

MASI Development Services
1901 N. Fort Myer Drive, #307
Arlington, VA 22209-1640

Telephone (703) 527-4300

Cable: MASIGROUP Arlington, Va

Telex: RCA 248646
Answerback IRAI

Project Director:

Walter A. Price, Manager
Rural Development Programs

Report Prepared by:

Mr. Steven Morgan
Agribusiness Management Specialist

TABLE OF CONTENTS

		Page
I.	INTRODUCTION	1
II.	PRODUCTION ENVIRONMENT AND PRODUCT QUALITY	3
	A. Climate	3
	B. Soil	6
	C. Water	10
	D. Varieties	12
III.	PRODUCTION PLANNING FOR THE MARKET	17
	A. Production Goals	20
	B. Classification Systems	23
	C. Competition	30
	D. Retail Marketing of Strawberries	32
	E. Use of Pliofilm Materials to Promote Marketability	40
	F. Retail Marketing of Pineapples	41
IV.	PROCESSING OF STRAWBERRIES, PINEAPPLES, BANANAS, AND TOMATOES	45
	A. Utilization of Non-Marketable Berries	45
	B. Processing Strawberries for the Commercial Markets	55
	C. Processing Tomato Products	62
	D. Manufacture of Fruit Products from Pineapple, Banana and Strawberry	77
ANNEX I		87

I. INTRODUCTION

This report summarizes the findings of the MASI Agribusiness Management Specialist who visited Paraguay during the period August 11-November 5, 1981. Terms of reference for this assignment were the following:

1. To advise the Marketing Department on ways to make marketing of tomatoes, strawberries, bananas and pineapples most profitable.

2. To assist the Marketing Department in identifying market outlets, both local and foreign.

3. To assist CREDICOOP in establishing sales policies, including setting of minimum sales levels, discounts for volume purchases, and prices.

4. To advise CREDICOOP in establishing short- and long-term production and credit policies based on market potentials, consumer preference, and other factors.

5. To assist CREDICOOP in identifying critical constraints to increase sales, and to propose measures to reduce these problems.

6. To assist CREDICOOP in selecting those varieties of fruits and vegetables which offer the best marketing prospects. Recommendations for varietal selections will be made jointly by the Market Analyst and the Production Specialist provided under the contract.

7. To advise CREDICOOP as to the most efficient means for coordinating the grading, transportation, packing and production presentation functions.

II. PRODUCTION ENVIRONMENT AND PRODUCT QUALITY

Characteristics of the production environment are important determinants in the quality of produce to be marketed. In this section, the influence of climate, soils, and water will be considered as they influence the quality of bananas, pineapples, strawberries, and tomatoes.

A. Climate

In general the climate of Paraguay is classified as subtropical-humid. A single dominating feature of the eastern part of Paraguay is the stream system of the Paraguay-Parana rivers, forming a great flood plain.

During the winter-spring period, the weather can change rapidly with low temperatures and frosts. A major frost occurred in Paraguay on June 17-18, 1981, causing major damage to banana, tomato, frutilla, and pineapple. A typical "winter" circulation pattern for South America is the movement of a high pressure system across Chile and Argentina on a southeasterly track. Once into Argentina the movement shifts to a northeasterly direction. Moderation of cold temperatures usually takes place over the Atlantic prior to reaching Brazil.

Periodically the high pressure system remains over land and moves in a more northerly track. This allows for the penetration of colder air into Paraguay and movement inward to Brazil's coffee producing region. Recently, the path of cold air entered southern Argentina

July 14, moving across the country on July 16, entering Paraguay July 17-18, prior to moving to Brazil.

Four to five light frosts are common per year in Paraguay, with a killing frost every 5 years on the average. Thus, the following comments should be made in regards to production-marketing:

1. Banana.

Mr. Maloney, MASI Packing and Marketing Specialist, has stated, "Paraguay does not have optimum weather for maximum growth, yield and quality". While bananas are grown in Paraguay, a great amount of additional effort is required to adopt proper cultural practices to improve yields and quality. A prior report indicates that a major constraint to marketing viability may be the financial feasibility at the farm level. The factor of periodic killing frosts could be a more limiting factor to larger scale commercialization by CREDICOOP.

Cold wind "burn" occurs when the fruit is exposed to near-freeze temperatures. This type of injury, coupled with improper handling, results in blackening large areas of the skin and reduction of the value of the fruit by more than 50%; yield potential is drastically reduced.

2. Pineapple.

The effect of the July freeze was dramatically observed during a trip to Arroyos y Esteros where a field of smooth Cayenne suffered severe damage. CREDICOOP had anticipated using this

farm as a possible seed source. On the same farm, the Abacaxi variety, while set back, would produce a marketable crop, at least in the local market during November-December. It would be advisable to follow up on the effect of the July freeze on yield and quality during harvest of the Abacaxi variety from this particular farm.

3. Tomato

Some 13 tomato fields were visited August 13-14 in the Quindy area. Plantings located on a concave plain, and those located in a lower elevation showed considerable frost damage to the foliage. At that time it was difficult to assess the damage to maturing fruit in the form of tissue breakdown (tomato production relates to hot, dry days and moderate night temperatures).

As of September 17th, tomato production was disappointing. There were indications that the frost effect has reduced yield and fruit size. Intermediate to full grown plants can absorb a number of light frosts, but will require the use of small smudging fires or protective plastic mulch liners to escape the effects of a hard frost.

4. Strawberry.

Strawberry has greater resistance to frost injury than tomato, pineapple, and banana. Nevertheless, vital plant parts are at or below the ground, and require some form of protection. Mulching with straw or plasticulture are forms of protection.

The practice of cultivating dry soil during periods susceptible to frost also must be avoided.

Because of the potential of killing frosts coupled with the longer cultivation period required to bring banana and pineapple to maturity, the investment in time and money by the small farmer should be of prime consideration to the CREDICOOP marketing department. While crops like tomato and pepper are also subject to severe frost, investment time to replace a planting is much less than banana and pineapple. A protected transplant nursery can always be maintained until the threat of frost has passed. Strawberry, tomato, and pepper are recommended as the first market crops to be developed into an active production and commercialization program.

B. Soil

The soils of Paraguay are reasonably fertile. The eastern one-third of the country is an extension of the old basic, complex rock of southern Brazil, covered with thick beds of red sandstone, into which lava, diabases and basalts of volcanic origin have intruded. Westward the ancient shelf is covered by a more recently deposited alluvium (the eastern region is a gently rolling, well-watered area of good grasslands and forests sloping towards the Rio Paraguay). Across the river to the west extends the Chaco, a vast piedmont type plain made up of unconsolidated sands, silts, and clays that have come down from the Andes.

The Paraguay Project Paper LAC/DR: 79-14 states that "...in general, soils have good physical characteristics for cultivation, predominant texture being sandy loam or sandy with drainage ranging from good to excellent".

While the soils are classed as generally deep, the pH acidity factor is quite low, with some problems of elemental deficiency. Where this situation exists, soils will be somewhat poor in fertility and will only react moderately to fertilizer application.

1. Banana

Banana plantings in Paraguay are observed to be under stress, resulting from nutritional, water, and cultural limitations. This condition forces early maturity, which in turn favors small fruit size and poor market quality. This type of fruit cannot compete in the market place.

2. Pineapple

Plantings show relatively poor plant size, and the effect of poor fertilization practices. Pineapple does have one advantage in that it will thrive on medium-drained, acid soils. Nutrition is required on a regular basis to develop large, marketable quality fruits.

The rooting system of pineapple is rather superficial and is susceptible to standing water. Pineapple subjected to poor drainage will appear for the most part healthy and sound on the exterior, but will show serious brownish discoloration in

streaks or in solid design when cut open by the consumer. Thus, a decided effect on marketability of the crop is related to soil quality.

Heavy soils make root penetration difficult, and result in unhealthy plants producing poor quality fruits. Sandy soils present the problem of excessive permeability, resulting in poor plant development and fruit quality during any prolonged water shortfall.

The plant prefers soils with an approximate pH of 5.0 and rich in nitrogen and potassium. The presence of high amounts of calcium and magnesium will adversely affect plant development, interfering with the absorption of iron, and causing chlorosis.

3. Strawberry

Plantings should be on well-drained soil. Strawberry should never be planted on compacted, calcareous soils. Because of the porous nature of the soil, the soil should never be worked for weed control or general cultivation prior to low temperatures or anticipated frost. A loose soil will induce "winter kill."

Best yield and berry quality are obtained on fertile, well-drained soils, but having high moisture retention capacity. In some cases it might be necessary to develop a soil builder (organic matter) that will increase water holding potential, in order to produce quality berries (manures, crop refuse, plowed under cover crops).

4. Tomato

To grow the perfect quality market tomato, information provided by soil testing is essential. The pH level and lime requirements are by far the most important consideration in testing. The tomato plant requires a deep loam to clay-loam soil with a pH of 6.0 to 7.0 for production of top quality fruit. Soils should be ploughed to no less than 18 inches in depth in order to promote a good root system and adequate plant size.

C. Water

Plant growth potential, fruit sizing, and final market quality and availability, all relate to water or the lack of water. References such as "rainfall is adequate and distributed evenly over the year accounts for Paraguay's ability to produce many agricultural crops" are misleading when specialized crops for marketing are involved.

Many factors contributed to poor cropping returns in 1981. However, a series of frosts, under-fertilization, poor cultural practices, and improper irrigation were among the most serious.

The banana plant in Paraguay yields small fruit size. Both tomato and strawberry plants are deficient in required supplemental irrigation. For example a deep rooted normal tomato planting requires 3-1/2 to 4-1/2 acre feet of water in order to develop full production potential. For strawberries to achieve high yield and uniformity of size, a constant supply of water must be available. Furrow or drip line irrigation is the best way to achieve production of a marketable product.

Pepper plantings suffered from the cold period and lack of adequate irrigation. Again, in order to achieve a good average fruit size for the market, pepper planting must be forced to total structure prior to flower setting. Pepper plants under stress (lack of water) will tend to bloom prematurely, thereby setting back plant growth and producing small peppers.

For tomato plants frequency of water application depends on the stage of growth of the vines, daily temperatures, humidity, air movement, light intensity, and soil type. Where the soil has been deeply plowed and is a clay loam, for example, a slow deep irrigation could hold for 12 to 14 days. With constant high temperatures and a sandy loam, irrigation will have to be more frequent.

Regardless of what method is used to apply water, the most frequent cause of blossom end rot, catfacing and irregular fruit is the unevenness of water supply.

Rains or frequent shallow irrigations will stimulate the development of roots in the layer of soil near the surface. The plants will then become adjusted to this regime. Then if this surface layer dries out, they may wilt. They may have developed few deep roots. Also frequent shallow irrigations, can gradually dry out the lower depths of the soil reservoir; this reservoir cannot be refilled by light applications. Thus, plants are restricted to a shallow depth of soil for both nutrients and water. Characteristic rooting depth for selected plants when there is no barrier to penetration are as follows: pepper, squash, and eggplant - 36 to 48 in.; tomato - more than 48 in.

D. Varieties

1. Banana

Fruit produced in Paraguay are small. The varieties Oro and Carape produce small lady-finger, minitype fruit for the internal market. Fruit size is as follows: Oro: 7-10 cm in length, and Carape, about 15 cm.

In Market No. 4 of Asuncion, the mid year price for a period of four years 1978-81 showed that Oro brought a better price on the market. Quality in the market is usually very poor due to extremely rough handling. For the local varieties, a recent estimate indicated that a stem of fruit averages about 20-22 lbs. For the Cavendish variety, Paraguay stem weight runs 50-60 lbs. In Central America, stem weight is 85-90 lbs.

2. Pineapple

There are numerous varieties of pineapple; six are considered of importance from a commercial standpoint for the world market:

a. Cayenne: the most widely planted variety, weighing 3-5 1/2 lbs., it has a high acid and sugar content. It is most excellent for the fresh market and the processing industry (Hawaii, Philippines, South Africa, and Australia).

b. Queen: Weighing 2 1/2-3 lbs. It is mild, and has less acid than Cayenne (Australia, Malaysia).

c. Sugarloaf: This name is applied to several closely related

varieties of globular shape, yellow-white flesh, and sweet, rich flavor (Mexico, Cuba).

d. Red Spanish: Red Spanish is square in shape, flesh is pale yellow, fibrous and aromatic. It weighs 3-5 lbs. and its taste is spicy and acid (Florida, Cuba, Puerto Rico).

e. Cabazoni: Also known as "Big Head," this variety weighs 5-10 lbs., has yellowish-white flesh and is grown mostly in Puerto Rico.

f. Pernambuco: Cylindrical in shape, Pernambuco has yellow-white flesh, is tender and juicy with a mild flavor, sweet and somewhat less acid than the Cayenne (grown primarily in Brazil).

Varieties grown in Paraguay are Abacaxi and smooth Cayenne. Class 1 Abacaxi weighs about 2 1/2-2 3/4 lbs. Fruit size can be rather small for other general classes on the market (averaging some 900 gm). For the present time, Abacaxi is the major variety grown in Paraguay. An effort is being made to increase plantings of smooth Cayenne in the country. Possibly this pressure to replace Abacaxi came from the processing sector. Smooth Cayenne is noted for its greater yield for processing - having less shell per fruit ratio than other varieties. Mexican and South American varieties are known for poor fruit utilization yield and for fibrous or woody" tissue. Of great importance, Abacaxi was observed to have less freeze injury than Cayenne or other varieties this past August.

3. Strawberry

The prevalent variety in Paraguay is known as either Margarita or Florida. It appears to be a small Florida No. 90 or a mixture. Efforts are underway to diversify by testing a Brazilian variety and Campinas#2712, and 6 varieties from California and Florida. The objective is to determine marketing and quality performance.

There is a great need to select varieties that will improve production of a firm, medium size berry that would have all the characteristics of quality in the fresh market and industrialization potential.

The prevalent variety on the market is small and ripens in an irregular manner. Approximately 1/3 of the berry tends to pick out green or yellowish-green. Essentially Margarita as produced in Paraguay is not an attractive fruit for the market.

The Ministry of Agriculture reports the introduction of new varieties such as Monte Alegre which is said to have good quality and is expected to produce 6 to 9 tons per hectare. This was compared to average Argentine production for the period 1970-1975 of about 3 tons per hectare. Using California varieties, Argentina production surged to 4.7 tons per hectare from 1975 to 1980.

The Tioga variety grown in Argentina is superior to Paraguayan varieties in terms of fruit size, uniformity, firmness, and

color. Tioga is also being planted as more or less the standard market variety in Uruguay.

Exceptional results have come out of the University of California strawberry breeding and testing program. Fresno, Tioga, Tufts, and the newer Toro, Aiko, and Cruz varieties have been developed. Generally, varieties newly released are more productive than the varieties they replace and have higher quality for both fresh market and processing.

4. Tomato

The following varieties can be expected to be found on the Paraguayan market: Santa Cruz and Noyomi (Nadomi). Additionally a small lot of Perita is observed in the market. Santa Cruz is also imported from Brazil and accounts for about 5% of total local sales. From 70-75% of exported sales to Argentina is Noyomi with Santa Cruz at 20%.

CREDICOOP has been informed on a number of occasions that the Buenos Aires market wants large, round tomatoes of the Noyomi type. Meanwhile the writer was informed that the market was fond of the firmness and quality of the Santa Cruz. For a 5-day period, the author observed that the auction floor handled about 1/3 Santa Cruz, 1/3 Platense, and 1/3 Noyomi.

While there is some problem with Platense due to color and non-uniformity, wholesalers in the Buenos Aires market boast about Platense as the "national tomato". Perita and other "pear

type" varieties were also found in the wholesale-retail markets.

In Uruguay, a large smooth variety called Marmonde is the main tomato in the fresh market, followed by Santa Cruz, Perita, and a few lots of Platense. Marmonde appears to be an old line variety, established for some time in the Montevideo market. Packed out, Marmonde is far more attractive than Platense, and of good uniformity. Marmonde should be considered for trial under Paraguayan conditions to determine its cultural requirements, holding ability, or level of anticipated cullage.

Petoseed Company of California provided CREDICOOP with 14 tomato and pepper varieties for trial under local conditions. For the present, a small number of plants are under general observation at the experiment station in order to determine late season - high temperature effects. The Peto varieties should be included in the expanded 1982 research trial.

III. PRODUCTION PLANNING FOR THE MARKET

CREDICOOP lacks experience in the area of production planning for the market. Prior to the end of the current production and marketing season, plans must be made for the 1982 program. For example, a meeting should be held in which field production and marketing sectors enumerate the problems which have been encountered and develop the necessary inputs to remove the constraints that occurred during 1981.

The following should be considered:

-- Determine the number of hectares of tomato and pepper to be produced;

-- determine if land and irrigation water are available to carry out production goals;

-- schedule plantings to take advantage of peak market demand in Buenos Aires. Estimated harvesting startup should be based on time of transplanting, variety, locale and site of planting, and cultural effects;

-- prepare estimated harvest calendar to assist marketing department in anticipating produce availability, amount, and time. This will allow the marketing department time to determine sales outlets. The harvest calendar schedule should be continually updated in accordance with changes in temperature and other factors;

-- once the estimated harvesting delivery date is known, it is the marketing department's responsibility to immediately classify, pack out and ship the produce to an available market.

Steps should be taken to discourage the overhead irrigation of berries by the current sprinkler system. The "hosing down" of berry plants is to a large degree responsible for fine sand and soil particles adhering to the fruit. Secondly, sprinkler run off is lost by the plants - with lessened plant growth and potential yield. Maximizing water availability maximizes berry size.

For the coming production year, plans should be made to provide for a drip irrigation layout to provide experience. It would be ideal to provide for the services of a water-irrigation specialist to (1) layout the drip system, (2) to examine the present irrigation application (and limitations) for berries, tomatoes, etc. and to recommend productive procedures, and (3) to survey water supplies and determine limitations.

The ideal time to lay out the irrigation system for strawberries would be after plowing and preplanting soil preparation. The plastic tape or tubing can be installed immediately prior to or after transplanting.

Drip systems offer several advantages including a 33% water savings overall, and approximately a 50% savings can be expected when compared with the furrow system.

Extensive experimentation and commercial application showed that a single drip line on a 40 inch wide plant bed with two rows of plants was successful. Later trials showed there was a great advantage in using two parallel drip lines on a 60 inch wide plant bed with four rows of plants on each bed. The four row bed increased the plant population from a maximum of 39,401 (8 inch plant spacing in the row) on the 40 inch wide 2 row bed to - 52,269 plants/A on the four row plant bed. The move alone increased yield/A from 8 to 10 additional rows. Yield under this system amounted to 60 Ton/A.

Presently it would appear that growers should install drip lines after pruning, just before mulching or setting up plastic sheeting, which is more difficult because of plant size - but does give better water distribution. It is obvious that water placement is important, especially when water quality is considered. The top of the bed, surface application with the water moving downward improves plant performance. This is only possible when polyethylene mulch is used.

This modification (bed shape and drip) allows the growing of strawberries in areas that are considered marginal, e.g., very light soils, very heavy soils, and soils on very steep hillsides.

A. Production Goals

For the period 1983-85, every effort must be made to arrive at a production goal that will provide adequate produce in order that CREDICOOP will establish viability in both the internal and export market. Particularly during the coming year, problems must be resolved, seed production accelerated, and technical inputs applied.

Recommendations for expansion of output for tomato, pepper, and strawberry follow:

	1980		1981	1982	1983	1984
Crops	No. Farms	Area	Ha.	Ha.	Ha.	Ha.
		Ha.				
Tomato	50	25	25	75	100	150
Pepper	-	-	-	25	35	45
Strawberries	-	-	-	10	22	50
Total	50	25	25	110	157	245

1. Tomato

Tomato production must be accelerated in order that CREDICOOP has a "voice" in the market. The number of hectares could be increased if CREDICOOP should utilize diversion produce in a small scale processing unit for puree and other tomato products.

In the author's opinion, peppers should have been included in the Paraguay project. Peppers are a "natural" when marketing tomatoes; market returns for peppers are for the most part greater than tomatoes. There was a definite scarcity and high price on the Buenos Aires market during an October visit.

2. Strawberries

Projections made in the preceding table are modest because there are a number of problems that must be corrected prior to any large land assignment for strawberries. Some 10 hectares would provide for a startup if all went well and the quality problem was resolved. A decision then could be made to expand to 50 hectares in 1984. A small processing unit may be required to utilize ripe, and marketing diversion berries.

3. Bananas

For immediate programming purposes, the domestic market offers the most attractive outlet for CREDICOOP bananas. Paraguayan bananas would not be competitive in the Buenos Aires market since they would have to compete with fruit of superior quality currently being imported from Ecuador, Panama, and Brazil. Uruguay is a large consumer of bananas and might be a prospective market, but competition from other supplier nations is also strong in Uruguay. Basic research is needed for correcting soil problems, examining the effect of nematodes, irrigation, and horticultural inputs. Perhaps this search will support farm adaptability tests to develop recommended practices that will result in improving yield and quality and fill the deficit that exists in the Paraguayan market. The big problem to be considered is the balance of production investment - financial benefit at the farm level, and the limitations of climate for banana production. The establishment of production plantings should follow a conservative approach prior to any 200 hectare program.

4. Pineapple

CREDICOOP should have no problems in marketing the production proposed in the Minifundia program. Marketing feasibility at the farm level and in the retail market appears to have good prospects. The price at the retail level for the Abacaxi variety is rather high, and there is a deficit in internal production, promising an open market. Abacaxi appears to be more hardy than the smooth Cayenne variety, but commands a lower price on the market.

As to preference between banana and pineapple within the Minifundia program, the chance for developing quality fruit would appear to be greater with pineapple than with banana. This would favor the export market to Argentina. The chances of freeze damage to pineapple is possibly a little less than with banana. The following recommendations apply to pineapple cultivation:

-- Establish seed beds immediately;

-- Apply modern pineapple production technique; and

-- Consider 50 hectare startup 1982-83.

B. Classification Systems

Classification of CREDICOOP produce must be improved. In general for three out of five marketing days, fruit quality and firmness from CREDICOOP was in the top of the Argentina market. Firm "pinton" from Paraguay provides for good interest from Argentine wholesale buyers.

Unfortunately for one day, the market was flooded with green tomatoes from Paraguay, including CREDICOOP. This situation was intensified by very cool weather in Buenos Aires, retarding maturity and in effect contributed to carry over of "green" produce. This was an ideal example in which the marketing sector was affected by apparent lack of harvest control or monitoring.

On the fifth and last day of the writer's visit to the market, the entire market was overburdened with advanced "pinton" and "madura". This was because of the prior "green maturity" in the market; the call went out to bring in "madura". This was a poor move on the part of the market manager for they had a backlog of ripening green fruit; the call for madura maturity further depressed the market.

Additionally, classification for size was poor throughout the market for the same day.

CREDICOOP should install a small mechanical grader for size sorting in the packing facility. The present method of classifying is inadequate:

- Accuracy in hand to hand classifying is very poor;

- there is excessive handling of produce from farm to the marketplace which encourages points of damage and reduces quality;

- receiving and packout is extremely wasteful and inefficient; and

- with the proposed acceleration in production the present method of classifying is particularly inadequate.

1. Sorting Units

A grading unit need not be sophisticated. The system could be purchased prefabricated and shipped to CREDICOOP for installation. A critical factor would be the makeup of the sizer belting, according to the number of sizes and diameters required (see figures 1 and 2 of Annex 1).

A fairly simple system would be as follows:

- A dry dump onto an adjustable speed inspection line. As the fruit is moved along the line, a number of workers remove all the cull fruit to throwout lines or boxes;

- after the cull line, the fruit enters the grader, where the three sizes are accurately sorted out by the grader belt;

- each grade size is diverted separately to a color (maturity) sort line where "green," "pinton" and "madura" is assigned by eye and directed to the correct hold bin for

packing out. In this system, the tedious and inaccurate hand sort for size is bypassed and color sort becomes much easier for the individual grade size diversion.

A small roller grader will be needed for the Santa Cruz and other pear or block shaped tomatoes in order to size grade this type of fruit. After grading out for size, the tomatoes could be diverted to the same color line/sort-bin/packout station used for the round varieties, or preferably a second color sort packout table could be constructed.

2. Sizing Equipment or Size Graders

Either roller or belt conveyors may be used to carry the fruit to sorters. From 3 to 5 (or more) persons work on either side of this unit and remove defective fruit and/or make other segregations when required.

Most packaging machines will handle "mature green", and vine ripe "pinton" tomatoes in considerable volume. However, packers of "pink" grade tomatoes prefer to have sorters or packers to size the fruits by hand and trained eye.

The writer has prepared a series of drawings to illustrate a number of line variations. The construction of inspection (sorting) and sizing belts varies with different manufacturers, but most machines are equipped with rubber covered or composition belts (see figures 1 and 2 of Annex 1).

As tomatoes reach the end of the sorting unit they then start over the sizing unit. A typical sizing unit consists of a series of three (or more) wide continuous belts which are perforated with round holes at regular intervals. The diameters of the holes in the three belts increase consecutively. The first removes the smallest tomatoes, the second the next largest size and the third a still larger size.

For the CREDICOOP classification system, the sizing unit belt would have the following hole diameters:

Variety Santa Cruz: (O) 5 cm. (P) 5.5 cm. (Xtra) 6.0 cm.
Variety Nadomi: (O) 6.5 cm. (P) 7.5 cm. (Xtra) 8.5 cm.

Further refinement can be incorporated within the system -- using an additional series of smaller sizing belts.

With either system the tomatoes are conveyed on belts carrying the separate sizes to packing bins. From a continuous belt packers select tomatoes for later placement in shipping containers, or they directly place fruit into shipping containers if the fruit is to be shipped without special packing.

3. Processing Diversion

CREDICOOP may wish to consider the diversion of small tomatoes from a poor market price and larger ripe sizes to a small processing unit for catsup or "salsa". Tomatoes can be diverted

off the sorting line with ease and accumulated for an efficient processing run.

4. Washing

Tomatoes are usually washed to improve appearance, remove soil, sand, and course abrasions. There is generally a "hopper" or "tank line" into which tomatoes from field containers are dumped by hand or automation.

From the wash tank tomatoes are moved on a floating basis by roller conveyor through the wash tank to an elevator system onto the "line". Spray jets can be employed for additional washing. Various trademark washing solutions can be used from time to time in the wash tanks. When chlorine solutions are used, the fruit is washed by fresh water sprays after leaving the tank. (Chlorine solution will work as a decay inhibitor).

Washing will assist sorters in detecting and removing defective tomatoes that otherwise might be missed.

5. Waxing -- Drying Process

Where tomatoes are waxed, they move from washer to waxing machine. A very thin coating of wax is applied by bath emulsion, spray or brusher. Waxing delays dehydration, shriveling and improves appearance. (Waxing is not necessarily an input for the CREDICOOP packing operation but a discussion stimulant.) Tomatoes then move through a drying process, accomplished by fans, brushes, and heat.

6. Sorting and Packing Bins

CREDICOOP can consider the following alternatives as a transition from its present grading system:

a. A dry dumping station that is well padded of canvas cloth or a changeable foam-rubber pad should cover the bottom and sides of the dump. The bottom must have a gentle fall or shape allowing a roller inspection line.

b. Workers will remove all cull fruit and trash from the inspection belt. The culls and trash must be weighed and recorded for weighback of produce adjustment.

c. Following inspection, the tomatoes go directly to the mechanical size grader.

d. As each size group is sorted out, tomatoes will be diverted to the conveyor system, taking the individual size group to a separate color-maturity sort line.

e. Workers will visually sort by hand for the maturity separation required, from the conveyor line to the proper bin.

f. Whereupon the packers on the opposite side of the line will simply pack out the boxes, from tomatoes that have been both size graded and color-maturity graded. Only one function will be adhered to by inspection-cullage, by machine, color sort, and by packer. Superior efficiency, quality, and responsibility can be developed and measured by the packing house supervisor.

The sorting and packing bin method may be used where no conveying machinery is available. The following design is suggested. A table-like series of bins is constructed of wood. The length of the combination sort and packing unit is determined by the number of sizes and maturity grades required. CREDICOOP classification is 0 plus 3 maturity ranges; Promedia plus 3 maturity ranges; and Extra plus 3 maturity ranges.

The packing bins are approximately 6 inches in depth at the back, 30 to 36 inches wide, and 36 to 48 inches from back to front, depending on the pitch (declivity of the floor of the bin, toward the packers). The bottom of the bin is usually made of wire netting of about 1 inch mesh, stretched tightly and covered with burlap or canvas. The sorting bins are commonly about 18 inches wide and 6 inches deep with canvas bottoms.

It is recommended that one unit be made for experience, and a second unit for the separation of the two tomato varieties in use. The ideal approach would be to install the sorting and packing bin and to set up a small mechanical sizing line, and transfer the fruit directly to sort-pack line for maturity packers. A washer-drier could be gradually added for an efficient tomato classification system (see Annex 1 table 3).

7. Lighting

The present lighting in the packing facility is inadequate for proper classification of tomatoes and other produce. For the present and in particular following installation of a

combination mechanical grader and manual sort packout line, lighting must be greatly improved for greater quality selection.

8. Space

The new packing facility - warehouse has an area of 1,000 square meters of floor space; the building was envisioned as a combination classification, refrigeration and ripening facility. The installation of refrigerated store rooms and walkway space would reduce by about 50% the total workable area for receiving, classifying, and packing.

The preliminary draft by Dr. Kramer, MASI Cold Storage Specialist, and the report on the CREDICOOP Refrigeration facility by Mr. Skinner and Mr. Robertson, USAID Cold Storage Specialists, show two separate refrigeration facilities. Each facility is to have four storage rooms. Each facility would occupy an area of 22 x 8 meters; there would be between the facilities a 6 meter aisleway, 22 meters in length.

C. Competition

Some 13 suppliers of tomatoes from Paraguay are identified in the Buenos Aires market. The suppliers are also CREDICOOP's competitors in the marketplace. Maximo Kank, Oro, El Paraguayo S A., and "Proa" are several of the main competitors. Maximo Kank, Oro, and El Paraguayo laid down some 9 to 11 thousand boxes on the market floor compared to CREDICOOP's 800-1,000 box laydown for a given auction date.

For "Proa" Promotora Agricola Industria Nacional, Asuncion, quality and packout, presentation was excellent on two market days.

A very important object for CREDICOOP's marketing department is to determine capacities and advantages that a marketing competitor may have, i.e. cultural efficiency, classification, quality, presentation, and (most important) marketing returns.

D. Retail Marketing of Strawberries

Once strawberries are available in large, attractive quantities they favorably market themselves for two reasons: consumers know it is the correct time of the year for potential quality and favorable juicing. For entrance into the export market this means usually an out of season offering riding into the higher income dollar market.

Measures must be taken to insure that nothing will detract from the promotion of sales:

- Because the product is fairly costly, keep the tables and containers clean.
- Watch for damaged or over handled product and promptly remove from any sales promotion or offering, especially if CREDICOOP is identified by product label.
- Do not stack any containers as those on the bottom are easily damaged.

1. Care

Short storage is the rule for maintaining fresh strawberries at best quality.

Strawberries at the retail-consumer level are very seldom kept more than five to seven days with refrigeration. Storage temperature must be held below 40 degrees F. (32 degrees is considered best with relative humidity at 90 - 95%).

Strawberries in the market are classified as a specialty line. Specialty lines include mushroom, mango, papaya and others. All are difficult to maintain in merchandising at the retail level and are considered as high risk sellers.

Additional high loss can be expected due to customer handling. 10 - 15% loss is expected due to customer manipulating and self sorting towards the bottom of the container to remove spoiled berries and to replace poor colored berries with full colored.

For berries, produce spoilage is much larger in small retail outlets than in larger markets due largely to less frequent customer turnover in the smaller store.

Because specialty lines absorb larger losses, the gross margin at retail level is usually pegged at 20 - 23% higher than "mainline" items. (Example: potato at 20 - 25%, berries at 40 - 45% g.m.).

On the other hand during the peak of the harvest season, in order to move berries, markets will use specialty items as a "sales leader" for special events, pre-holidays, etc. or to promote a complimentary product. In this case the specialty item (strawberry) becomes a "fast sales leader". Successful use of this technique requires knowledge of the market, time and experience to achieve rapid sales movement.

Strawberries have a short storage life. Without precooling and cold storage, fruit losses are rapid; gray mold rot and other diseases will spread through a container within two days. The writer has observed fully ripened berries to collapse completely in 24 days under high summer temperature. After a few days in storage, the fruit loses some of its bright color, tends to shrivel and deteriorates in flavor.

Deterioration is arrested by low temperature but after removal from storage, breakdown will proceed more rapidly than in freshly picked berries.

There are five important steps to maintain arrival quality and increase retail level profit:

a. Refrigerate at 32 - 35 degrees F.;

b. High humidity must be maintained;

c. Move from delivery trucks into cooler storage;

d. Package berries to make attractive to consumer; and

e. Use high impulse cover display, do not place in background - require high turnover to avoid shrinkage.

For most practical retention of quality at the consumer level, strawberries should be scheduled from cooler storage, and based on a planned one day turnover. At times, berries can be held successfully for a day or two at room temperature but sellers had better not count on this point. Any reserve must be kept below 40 degrees F.

A serious marketing problem exists with Paraguayan strawberries in that a considerable amount of sand and dirt is found on berries after harvesting. This problem for the most part is caused by a hand-portable sprinkling system commonly used to irrigate strawberries and tomatoes. The showering causes fine particles to splash onto foliage and berries. Upon drying the berry feels gritty -- an abrasive feel.

Strawberries covered with the clinging gritty particles are sold on the street corners and the Central Market. Additionally, the fruit is generally of very poor quality, green and poor colored berries are mixed together and in numerous cases the containers have a high proportion of actually rotten berries.

Offerings of very small, dirty and moldy berries were observed on two visits to the Central Market. Average price for a small basket was G 250 (US $1.70). In reality the berries should have been thrown away. A similar quality of berries was found in the street with an asking price of G 300, for the same small basket. None of the above berries in the writer's opinion is worth exporting to Argentina.

For the 1981 period, CREDICOOP has been asked to handle the commercialization for some 14 independent strawberry farmers. The Ministry of Agriculture indicates a benefit of some 30% return to the grower. A simulation prepared by Dr. Hopp indicates that financial feasibility at the farm level "is judged to be highly favorable".

It is interesting to note that the relationship between the production cost and sales price some six years ago provided an actual net of G 7.9/kg of berries to the grower. A simulation provided a positive differential of G 15.13/kg to the grower for 1981. The net investment return data will have to be strengthened by accumulating information from the contemplated growers affiliated with CREDICOOP this year.

For now, the problem relating to the removal of sand and dirt must be resolved if there is to be any success in the marketing of berries in the export market.

Obviously, the first consideration would be to remove the soil particles by washing or shaker vibration. A combination wash and vibration process would most probably be suitable for the removal of foreign material, provided the berries could be sold in a 24 hour period or were directed immediately to a precooler and refrigeration (32 - 35 degrees F.). Because of a lack of refrigeration facilities, the wash and vibration method is doubtful for fresh market berries. The alternative utilization of strawberries following the working procedure would be directed in canning or freezing processing. Unfortunately, the requirements are not as simple. The subject will be elaborated upon under processing procedures.

Because of poor knowledge as to how the Brazilian variety handles in washing, longevity, and quality retention, the following suggestions are made:

a. Freshly picked berries be sold directly on the local market in the following manner:

- Farmer sells to trucker. Trucker sells to retailer. Retailer sells to consumer. All berries are harvested, classified for quality and culled at the farm and "packed" directly into containers. (Commercial application).

- The use of polyethylene bags is not recommended unless retailers have refrigeration.

- Test package in wood, cardboard, plastic containers and polyethylene bags to determine cost, efficiency, effects of transportation, product retention and consumer preference.

b. Freshly harvested berries should be included in the following trial:

- Transported to the classification center as under commercial conditions.

- Sampling reclassification to determine fruit quality and percentage loss.

- The fruit be placed onto a shallow wood framed tray having a metal screened bottom; and a separate removable framed screen or lid (to prevent fruit from floating out of the tray during washing-immersion).

- Fruit is gently placed into the tray. The lid attached and the unit immersed into a tank of clean water several times with a good "flushing" action. Both fresh water and chlorinated water should be utilized in the trial.

- Following flushing, berries should be gently dumped onto a dry elongated tray that is suspended off the table (line) surface with a fan blowing directly onto the berries. Also moderate shaking is suggested to remove water droplets.

- Following the above procedure, berries are placed into the various containers for transport and observation.

While the above trial is limited by equipment deficiency, some quality evaluation relating to transportation, time and effect of noncontrol of climatic conditions would be obtained. The test packaging will also relate to the washing trial and product salability.

c. The first trial input as to distribution - handling and time of movement, should be held in Paraguay:

- Time, condition and temperature. Transportation in truck from classification center to Airport. Transfer and waiting time prior to departure.

- Manner of handling into cargo. Cargo temperatures and flight time.

- Arrival Buenos Aires. (Time, Temperature) Time for cargo discharge, customs clearance.

- Manner of handling, transportation-distance to market. (Time, temperature, condition upon arrival in market).

- Retail-consumer level. Market condition - regarding product. Time, temperature, condition at time of selling

Experience obtained from the first washing and marketing trial should provide for a decision for a second trial which would include an actual export trial to the Argentina market.

d. Utilization of approved preservatives might be considered, for the washing (immersion) trial. Surface mold on fresh strawberries may be checked by dipping into sanitation solutions. Four molds are known to be resistant to sodium benzoate. Sodium benzoate has a wide applicability as an anti-microbial agent (0.05 to 0.10%) and is permitted in artificially sweetened preserves, jellies, and syrups.

e. Proceed with alternate uses of berry production and product marketing evaluation.

E. Use of Pliofilm Materials to Promote Product Market ability

Strawberries are sold in Paraguay in various containers or from a loose mount of fruit from a basket or other container.

In the field the crop is harvested nearly 50% green and placed into baskets of 12 - 13 kg capacity, ungraded and not generally of good quality.

The sale of imported Brazilian produce in Asuncion in consumer packs at about two times the price of domestic ungraded fruit would indicate a market exists. For the fresh market sales, Paraguayan berries will have to at least meet the grade, packing and container presentation of the imported Brazilian strawberry.

Presentation is a prime factor in selling berries. Since the public has become more sanitation conscious, there is a trend to use a Saran, pliofilm cover in smaller container units. The use of a fine gauge transparent wrap on material not only provides for an attractive look of the product, but maintains freshness and holds berries from spilling out of the container. Pliofilms, Saran's, heat retractable films are ideal for unit wrappers and display.

Utilization of pliofilm.

Used for enclosing cheese, prepared meats, candies, etc., the material is transparent, tasteless, odorless, durable, moisture proof and yet permeable to carbon dioxide gas. It also has the ability to

absorb shocks of processing, transportation and marketing and molds will not grow on its surface.

Use of pliofilms will more than double the marketable life of soft mature peach at each temperature employed. Persimmon fruits wrapped remained marketable three weeks longer than non-wrapped fruit. In the case of vegetables, wrappers or top seal have been efficient in preserving original harvest quality and appearance. The fruit is marketable from two to ten times as long as crops not treated.

Small containers should be wrapped with Saran wrap pliofilm in holding and transportation tests for Paraguayan berries.

F. Retail Marketing of Pineapples

1. Care

Pineapples must be harvested at exactly the right stage because they do not get sweeter or riper once harvested. If harvested too soon they will lack sweetness. If they are picked too late, they will not hold up in transporting.

2. Good Quality

a. Fruit is plump, large and fresh in appearance.

b. Crown leaves fresh and deep green.

c. The "eyes" may be flat and near hollow.

d. Good fragrance is important but consumer preferences vary greatly.

3. Poor Quality

a. Fruit having dry, brown leaves, dull yellow appearance. The yellowish appearance is indicative of a flavor breakdown and acidity taste.

b. Positive bruised areas, softness with discoloration indicate internal decay.

c. "Eyes" that are dark and watery are bad indicators.

d. Unpleasant odor.

4. Merchandising

Prominent - rural type displays, or arrangements on a bulk bin provides the idea of harvest continuity directly to the customer.

Generally, all pineapples on the retail shelf should be mature and ready to eat.

Educating customers is most important when pineapples are involved. For example, the customer must be cognizant that "green" pineapples are just as ripe as yellow fruits. Thus color is not necessarily a sign of marketing maturity or ripeness.

CREDICOOP will most probably be concerned with supplying the local market -- thus, at least in the beginning, cold storage will not be an issue.

5. Containers

Presently large wood field boxes are used to ship pineapples from the farm to the retailer in Paraguay. Half bins might be considered in bulk shipping for direct selling.

In advanced marketing, van loads are already broken down into 1/2 and whole cartons and hold 20 and 40 lbs. of fruit. Upon arrival, pineapples can be sold directly from the box to consumer or removed from the carton and placed in sales offering.

The shelf life of fresh pineapple is not expected to exceed 12 to 14 days under optimum harvesting and transportation conditions.

6. The Market

For the present the development of the local market appears to be more advantageous than any immediate prospect for exporting pineapples to Argentina.

Pineapples from Brazil are present in the Paraguayan market for a period of up to three months as local production is limited during this period. Production scheduling may correct the deficiency. Price for pineapples during August - September is very high and quality is poor. Until a production source is developed on a steady available basis, and a quality pack is implemented, exportation to Argentina in competition with Brazil is highly debatable.

CREDICOOP should develop the production and marketing for the internal market. At present the movement through the market is that

the Cayenne and Abacaxi varieties are sold by the farmer directly to the wholesaler.

IV. PROCESSING OF STRAWBERRIES, PINEAPPLES, BANANAS AND TOMATOES

A. Utilization of Non-Marketable Berries

A certain percentage of sound berries delivered to the packing house are unsuitable for fresh market sales because of small size, misshapen, blemished, and broken fruit (under the best of conditions one can expect 8-10% diversion from the fresh market to processing). Such berries may be diverted for use in small lot home processing or in a community venture with a number of households favoring this option.

No green, discolored, or spoiled fruit is to be used. More advanced, ripe berries will result in a dark unattractive product.

White sugar must be used, because dark brown sugar will cook out a dark product.

The following procedures are for small family lots. The method of preparation cannot be related to larger commercial procedures. Prior to processing, all fruit must be stemmed, caps removed, the fruit thoroughly washed in clean cold water to remove sand, dirt, and insects.

First, definition of product:

Preserves are usually made from whole fruit or large pieces of fruit. For fancy preserves, the fruit should be firm ripe rather than a soft ripe stage.

Conserves are a mixture of fruits to which nuts can be added.

Marmalades, correctly made, have small pieces or thin slices of fruit in a jelly-like consistency.

1. Strawberry Preserves

   Makes three one-half pints per lot. Requires four cups of strawberries and three cups of sugar.

   Step 1: Add sugar to the berries, mixing gently in a four quart pan and allow to stand for 10 minutes.

   Step 2: Bring the berries to a smooth boil, stirring until the sugar is dissolved in the berry juice, and cook until the berries are tender (soft) - about 3 minutes. Allow the berries to stand overnight in the now syrupy mixture, in a cool place.

   Step 3: The next morning bring the mixture to a boil and cook for one minute, after boil.

Step 4: Cover the preserves and allow to stand for 2 minutes.

Step 5: Stir the hot preserves, then pour into hot, sterilized jars and seal with (1) screwtop-flange lid;
(2) Paraffin wax cap - after the preserves have cooled down enough to accept the hot melted wax. If carefully performed, the paraffin wax topping method will provide lasting sterilization.

2. Strawberry Jam

Makes six one-half pints per lot. Requires 8 cups of strawberries, 6 cups of sugar, and lemon juice.

When berries are ripe, add 1 to 1-1/2 tablespoons of lemon juice for each cup of crushed berries to make a firmer jam.

Step 1: Wash, drain, remove caps, crush berries, and measure out 8 cups.

Step 2: Add sugar to fruit. Cook slowly, until sugar dissolves.

Step 3: Boil rapidly until thick.

Step 4: Pour the boiling hot product into hot, sterilized jars and seal at once.

3. Non-cooked Jam

Makes four to five one-half pints per lot. Requires: 2 cups of strawberries mashed or thinly sliced, 4 cups sugar, 1/2 bottle of liquid pectin or 1 package of powdered pectin plus 1 cup of water.

Step 1: Combine berries and sugar. Allow to stand for about 20 minutes, stirring occasionally.

Step 2: If using powdered pectin, combine pectin and water in a sauce pan. Bring to a boil 1 minute, stirring constantly.

Step 3: Add pectin to the berries and sugar. Stir for about 2 minutes.

Step 4: Pour into clean jars immediately. Cover with clean lids, aluminum foil, or heavy waxed paper.

Step 5: Allow to stand at room temperature for one hour.

Step 6: Store in refrigerator, or freezer if glass designed to take freezer temperature.

4. Strawberry Jelly

To make good quality fancy jelly is an achievement. The method follows:

- Wash fruit carefully in clean water, discard all spoiled and discolored fruit.

- Crush fruit to start the juices.

- Extract the juice. For good jelly the fruit juices should not be diluted. Add only enough water to prevent heat scorching. (If the fruit should lack juice or be over-ripe dry, add up to 1/4 cup of water for each pound of fruit).

- Bring fruit to a boil rapidly until tender 10 minutes or more. Too much boiling will reduce the jelling strength.

- Pour the mixture into a four thicknesses of wet cheese cloth spread over a colander, or into a bag of one thickness of strong muslin. Bring the corners of cloth together, twist the bag to press out the juice.

Short boil method: must follow instructions on the pectin package. The boiling time is usually one minute and cannot be varied.

Long boil method: The fruit must be tested for pectin and acid, and add the amounts required. The ingredients are combined and boiled until the jellying point is reached.

Testing for Pectin:

Add 1 teaspoon of cooked fruit juice to 1 tablespoon of rubbing alcohol (70% alcohol). Stir slightly to mix. Fruit juice rich in pectin will form a jelly-like mass that can be picked up with a fork. Juices low in pectin will form only a few pieces of jelly-like material. Continue to add more pectin in the following manner - add 1 tablespoon of liquid pectin or liquefied pectin to 1 cup of fruit juice. Test again for pectin, repeat until enough pectin has been added. Measure the remaining juice and add the proper amount of pectin to juice.

Testing for acid:

For the making of good jelly, the fruit juice must contain enough acid. Compare tartness of the fruit juice with a mixture of 1 teaspoon of lemon juice, 3 tablespoons of water, and 1/2 teaspoon sugar. If the fruit juice is not as tart as the test mixture, add 1 tablespoon lemon juice to each cup of fruit juice.

Adding the sugar:

The amount of sugar used will depend on the amount of pectin and acid in the fruit juice. A good general rule to follow is to use about 3/4 to 1 cup of sugar for juice containing a high proportion of pectin. When the juice contains only a moderate amount of pectin, use 2/3 to 3/4 cup of sugar to 1 cup of fruit juice. If too much sugar is used, one will get a syrup instead of a jelly.

Cooking the juice:

Use a kettle that holds four to five times the amount of juice to be cooked (one cup of juice plus one cup of sugar makes 1-1/4 cups of jelly). Cook only 4 to 6 cups of juice at one time. Carefully measure the juice and pectin and place over heat.

When the juice comes to a boil, add the sugar and stir until the sugar is dissolved. Boil rapidly because long boiling when making jelly causes loss of color and flavor and destroys the jellying power of the pectin.

Testing for the jellying point (221 degrees F. at sea level):
In testing for a specific elevation, boil some water and note temperature at which it boils. Then add 9 degrees F. for the jellying point temperature. A candy thermometer is an excellent guide.

Remove jelly from the heat as soon as it reaches the jellying point. Let stand few minutes to permit foam to form. Remove foam carefully.

5. Making Strawberry Fruit Juices for Home Consumption

Important. Fruit juices preserved at home will keep their fresh flavor and attractive color if they are not heated excessively. Boiling, or heating below the boiling point for long periods, usually gives juices an unpleasant flavor.

Preparing the juice:

Heating makes juice extraction easier and deepens the color of the juice. Heating also inactivates enzymes, so that the juice retains a better quality.

Pressing the fruit:

Wash and crush well-ripened berries. Heat to 175 degrees F. Use cloth bags, clean muslin or canvas which is finely woven. This will yield clear juices, using light pressure during extraction.

Straining:

Following pressing, strain the juices through two to four thicknesses of clean, washed cheesecloth. Unwashed cheesecloth imparts an unpleasant flavor to the juice.

Adding sugar:

If the extracted juices need sweetening, add sugar, dissolving it thoroughly prior to heating the juice. If desired use one cup sugar to nine cups juice.

Pasteurizing:

(1) Double boiler method best retains the fresh flavor of the juice. Using a double boiler, fill the top part no more than 2/3 full of juice. Two pans may be used, a smaller one 2/3 full of juice set in a large pan partly filled with boiling water.

- Bring the water in the lower part of the double boiler to a full boil.

- Pour the juice, sweetened if desired with white sugar, into the top part of the double boiler, and place over the boiling water.

- Place thermometer in juice. Stir until a temperature of 190 degrees F. is reached. Remove the entire double boiler from the heat.

(2) Direct heat method yields juice with a cooked taste. Juice is brought to the simmering point or 195 degrees F. over direct heat. Stir juice gently while it is being heated.

Canning or Bottling:

- Use washed and sterilized (boiled) jars or bottles. Keep in hot water (just below the boiling point), until used. Scald or boil jar lids. Use bottles that can be sealed with crown type bottle caps. Use clean dry caps as purchased. Do not wash or scald the caps.

- Immediately fill each jar or bottle to the brim with hot juice (remove foam and replace with hot juice).

- Temperature of the juice should not drop below 185 degrees F. If this happens, set the double boiler over heat until the temperature again reaches 190 degrees F.

- If jars are used, tighten lids completely, and invert jars for 3 minutes. Cap bottles and turn upside down immediately for 5 minutes.

- Do not set the hot jars or bottles on a cold surface or in a draft. Objective: to keep the heat, sterility factor continuity and not break the seal.

Cooling jars or bottles: To retain color, reduce cooked taste.

- After inverting jars or bottles for the time directed, lower them into a large container of water which is just too hot to allow the hand to remain in it comfortably (120 degrees F.).

- After 5 minutes, pour out 1/3 of the water in the container and refill with cold water from the tap.

- Repeat after another 5 minute interval. Then place container under cold running water for another 5 minutes. Do not allow cold water to run directly into jar or bottle.

Juice will cool to the temperature of the cool water in from 20 to 30 minutes in bottles, and in 30 to 40 minutes in jars.

Store in a cool, dark, dry place. The cooler the storage temperature, the longer the juice will retain its fresh flavor, color and vitamin content.

B. Processing Strawberries for the Commerical Markets

The following procedure is believed to represent one of the most direct and standard practice as followed by the berry processing industry for cold-packing or freezing.

1. Harvest

Stawberries are harvested without caps in the field. The berries are hauled from the field to the freezer facility as quickly as possible. Caps are not removed from berries destined for the fresh market. Any accumulation of harvested berries in the field must be protected from the sun. Accumulated fruit at the factory makes for a continuous flow operation, but all fruit should be processed the same day it is harvested. Containers of berries are dumped into a washer unit. Rapidly running fresh water carries the berries to a bucket type elevator which in turn elevates the fruit to a flume of water carrying the berries onto a shaker grader.

2. Grading

The shaker grader causes the larger berries to roll down over slightly inclined slats, and then onto a belt moving at right angles to the shaker grader and are conveyed in front of a line of workers who sort out berries whose caps (hulls) have not been removed plus over ripe, green and damaged fruit.

Good fruit is conveyed into a barrel standing on a rocker. A worker rocks the barrel as the berries fall in from the conveyor

belt. He adjusts the flow of granulated sugar from a bin mounted on a frame over head - by means of a stop in a chute so that there is weighed amount of sugar in the proportion of 2 parts of strawberries to 1 part of sugar or at 3:1 proportion, etc., is uniformly mixed as the berries are following into the barrel from the sort belt.

The smaller berries (1-1/2 inches in diameter or less) roll through between the grader slats and fall into a flume of water conveying the fruit onto the next shaker grader. On the second grader, berries 1-1/2 inch to 5/8 inch diameter are separated, and pass on to a rubber belt (usually the industrial food inspection type), where defective berries and those with caps are removed by workers. Good berries are conveyed into a barrel standing on a rocker where they are mixed with a weighed amount of sugar as they fall into the barrel, in the same manner as the larger berries.

The uncapped fruit, which are picked off the inspection belt are collected and taken to tables where workers cut out the caps with spoons or small knives. The cut berries may be mixed with the lots prepared for slicing. When a barrel has been filled with sugared berries it is trucked to a scale where the barrel and contents are weighed, and the weight is adjusted to give the proper proportion of berries to sugar. The lock-type bit or head of the barrels is locked, and the following information is stenciled at the end of each large container: gross weight, net weight, sugar: berry proportion, code number, plus name and address of the packers.

3. Freezing

The filled barrels are rolled into a sharp freezer, in which forced air circulation is maintained, held at a temperature of approximately -10 degrees F. The following day the barrels are rolled into a 0 degree F. room and held one or two days in this room - after which the barrels are moved to a store room and held at 10 degrees F.

In order to facilitate freezing and to help mix the sugar and berries, the barrels are turned 1/3 turn everyday for 7 to 10 days. The frequent turning of the berries in the freezer is of prime importance; it helps to obtain a uniform mixture of fruit and sugar and hastens freezing.

The barrels are then stacked on end in a storage room and held at approximately 10 degrees F.

Food technologists differ concerning the best temperature to hold cold-packed strawberries. Some recommend 0 degrees F.; others recommend 10 degrees F. and others 12 degrees F.

For strawberries that are to made into preserves, texture is an important consideration. In heavily sugared packs, the fruit is not frozen absolutely solid at 10-12 degrees F. At 0 degrees F. the berries are frozen much better and harder, with greater breakdown of tissues resulting in the shriveling of the berries during thawing.

Low temperatures should be used for fruit to be made into jelly, jam, and ice cream. Higher temperatures (10-15 degrees) should be maintained for fruit to be used in making preserves provided storage period does not exceed six months at the higher temperature. In the trade, a considerable quantity of strawberries is also frozen in 30 to 50 lb. enamel-lined slip cover containers.

4. Quick Freezing Sliced Stawberries

Berries are cut into slices approximately 1/4 inch thick, mixed with sugar, and then packed in moisture proof parchment or cellophane type bags or pouches, placed in rectangular cartons holding approximately one pound of berries, and then quick frozen.

The process steps follow:

a. Harvested, capped strawberries are dumped into a washer-flume filled with highly agitated running cold water.

b. The water and the berries flow onto a shallow metal tank and then down a cascade of water.

c. Some of the berries strike a rapidly vibrating slat shaker and are moved down a short conveyor belt to sorting belt No.1.

d. The remaining berries fall into cascade of water, part of which falls on another slat shaker. The berries which strike the second slat move to sorting belt No. 2. The remainder fall into a cascade of water, some of which falls on another slat (No. 3).

e. These berries pass to sorting belt No. 3. The remainder of the fruit passes to sorting belt No. 4. The white rubber sorting belts are about 18 inches wide.

f. Workers sit on both sides of the belt and eliminate three classes of berries: (1) berries having caps; (2) green berries; (3) mushy, soft berries.

g. When the berries reach the far end of the sorting belts, they fall into the hopper of a slicing machine which cuts the fruit into slices about 1/4 inch thick. The sliced berries fall into large corrosion resistant metal pans. When nearly full the pans are placed on a scale showing a prearranged weight. The pans are passed onto workers, who add an amount of sugar equivalent to 1/5 of the weight of the berries.

h. The pan of sugared berries is placed in the hopper of a mixing machine which empties the berries into another hopper, turning them over simultaneously. The berries are passed first to one, two, three, and onto a fourth hopper

(all turning the fruit over). The mixture of berries and sugar is then placed in the hopper of an automatic filling machine.

i. The filling machine is adjusted to putting one pound of sugared berries into a moisture proof parchment bag standing in a rectangular carton.

j. The filled packages are then conveyed through a machine which heat seals the bag and stamps the code number on each carton.

k. The cartons are then heat sealed in moisture proof, transparent paper by machine. Approximately 40 packages are placed on a shallow metal tray (40 lbs. of fruit per tray). The tray is placed in a multiple freezing machine.

l. When the center of the carton reaches 0 degrees F., the freezer unit is unloaded; the cartons are packed in corrugated shipping containers holding 60 lbs. and immediately moved to storage maintained at 0 F. or below.

Proper Packaging

Proper packaging of product must be studied carefully for the best possible food preservation. Additionally, packaging should offer marketing eye appeal.

a. Materials must be specifically made for packaging foods for freezing and the technology understood so that exposure to low humidity will not affect the stored product.

b. Products must be protected from moisture losses, and in

most instances the packages must be heat sealed to insure product protection.

c. It is essential that cartons for freezing fruits be water tight, because liquid from the fruit may seep through the carton causing problems in the freezer.

d. Prevent contact of the product with air.

e. When packaging fruits, allowance must be made for an inch of headroom for expansion of liquid on or in fruits during freezing. If the allowance is not made, packaging will burst.

f. Some types of cartons and all the bag type liners require heat sealing to make them airtight.

g. Examples of cartons suitable for packaging frozen fruits:

End opening carton with moisture-proof cellophane bag liner.

Top opening ("Peters" type) carton with moisture proof cellophane liner.

"Sealrite" ice cream carton.

"Vapo can" container.

"Dacca" carton.

Tub shape "Lily-Tulip" carton.

C. Processing Tomato Products

Practically all tomato products consumed in Paraguay are imported from Brazil or Argentina. Natural tomatoes, catsup, and tomato extract are the principal imports. The major part of these products are consumed fresh when tomatoes are limited or when prices are high.

The sum of both illegal and legal importation of tomato products is estimated at US 300,000 dollars annually (1977). There is insufficient data to determine elasticity of demand. Unfortunately, there is an important lack of basic economic data to assist in determining small plant viability - importation.

One hundred and seven tons of sauces and preserves valued at US 170,000 dollars was legally imported; most were tomato products.

One metric ton of tomatoes having an average of 5 percent solids can be expected to yield the following amount of products:

730 kg of juice per ton
460 kg of puree per ton with 11 percent solids
190 kg of extracts (paste) 26 percent solids

A typical Paraguayan family of four purchases the small can of puree (200-250 grams) and this container size probably should be designated as the preferred size. Puree is more commonly used in Paraguay than

tomato paste. Tomato paste is also sold in the same size puree containers (200-250 grams), and in 350-400 grams, and 850 gram size. The large size is used by restaurants and institutions. (Reference - Dr. Anthony Stanley, INTN).

Tomato paste is the product resulting from the concentration by evaporation of water from pulped tomatoes - after the removal of skins and seeds. In today's commerce, it usually represents a concentrate in which the tomato solids have been erased from the natural 5-6 percent solids in the raw product to varied concentrator. The terms paste and puree today are used almost synonymously and in general is called "Tomato Concentrate."

International standards are noted as follows: puree applies to lower concentrations, while paste is used for concentrate of 28 percent or more:

Light tomato puree, minimum solids 11%

Medium tomato puree, minimum solids 15%

Heavy tomato puree, minimum solids 22%

Light tomato paste, minimum solids 28%

Medium tomato paste, minimum solids 36%

Heavy tomato paste, minimum solids 46%

The percent of solids is always given less added salt, sodium chloride cannot exceed 2 percent in 11%, 15%, and 22% minimum purees, 3% for 28%, and 36% minimum solids, 5% in 46% minimum solids.

The terms "double" and "triple" concentration as used in describing tomato pastes are not literal and in fact double concentration yields

approximately 1/5 and triple concentration 1/6. The weight of raw pulp, is somewhat less when related to the original weight of fruit before removal of skins and seeds.

1. Machinery, Equipment, Products, and Processes in the Manufacture of Tomato Products

In the manufacture of tomato products, tomatoes are received and are graded and weighed.

Sorting operations in the factory can be considerably eased by careful selection in the field. The quality of the raw material as it enters the factory largely determines the quality of the paste produced. The following considerations are important:

- color uniformity
- under/over-ripe fruit
- mold - insects
- excessive dirt - foreign material
- sanitation
- variety

Produce is emptied into tanks or flumes where they are flumed in water which has been centrifugally pumped. Then the fruit is discharged onto a conveyor which passes them under fresh water sprays.

Tomatoes are then manually sorted, trimmed, and inspected for defects.

Discharged into a crusher unit usually above a stainless steel tank for further disintegration through agitation and heat. When the peatinase of the tomatoes is destroyed, the disintegrated product is pumped to extraction units; the juice and pulp are screened separating juice, sauce, and residue. From this point on, each of the tomato products is prepared in a different manner.

2. Tomato Juice (see figure 4 of Annex 1)

Enter: field Brix 5.1 degrees Finish: Brix 5.6 degrees

a. Selection of Lots

A blend of varieties may be required in Paraguay to develop a product possessing good flavor and quality characteristics for juice. Lots having high pH should be avoided or blended with lots of lower pH to give a final pH of not more than 4.5.

CREDICOOP with the assistance of MAG should consider the development of a tomato variety screening program in order to improve on the two major marketing varieties now in use.

b. Preparation

Tomatoes drawn from the break tanks are pumped to two seprosivs

(0.023 screen) in series, the juice discharging from the first to the second. The resulting juice is collected for salting. (Viscosity 29-32 seconds range; 30-32 range desired.) Lower viscosities indicate need for checking and changing of extraction and preheat equipment.

c. Processing

System: still retorts. Fill at minimum temperature of 200 degrees F. No. 2 size (307x409) or smaller, 16 minutes at 220 degrees F.

System: A and B rotary cookers. 200 degrees F. minimum fill temperature.
No. 2 size container or smaller, 14 minutes at 212 degrees F.

System: flash sterilization at 240 degrees F. for 30 seconds if pH is under 4.3. At 245 degrees F. for 30 seconds if pH is 4.3 to 4.5. Fill at not lower than 200 degrees F. Seal and wash cans sealed containers in hot water (180 degrees F. or higher). Invert cans and hold not less than three minutes prior to cooling.

Thereafter, cans are discharged to a cable conveyor line, dried by air current, and transported to a labeling machine.

3. Catsup (see figure 5 of Annex 1)

Finish: Brix 14.54 degrees

Selection of Lots of Produce

Tomatoes for catsup should preferably be of high raw solids and have good consistency characteristics. Tomatoes of high pH may be added as final acidity is controlled.

a. Preparation

For catsup the preparation is very similar to the processing of tomato sauce. Juice material is identically concentrated to obtain required specific gravity or solids.

Tomatoes are drawn from the hot break tank and pumped to a single seprosiv unit (0.020 screen). The resulting juice is combined with the pulp from one pulper (0.045 or smaller screen using residue from the juice seprosiv above). The combined juice and pulp is comminuted (0.045 screen) before concentrating.

After mixing the ground, disintegrated spices, pepper, and other ingredients, the product is pumped through a high temperature short time pasteurization unit (a vacuum pan or 3 stage pasteurizer).

The catsup stock is pumped to a filler, filled into bottles previously washed and sterilized by machine, filled bottles are capped, washed in hot water, and processed.

Grade Specification Range: For specific gravity = 1.13 to 1.18; for total solids: 27.0 to 33.0 for viscosity F.M.C. units = 33-36, 40-44; Salt = 2.3 to 2.4%; Acid = 1.4 to 1.5

The makeup of a 400 gallon batch could be as follows:

Concentrated Stock, 292 gallons. Liquid sugar at 71 degrees Brix, 88 gallons. Vinegar 200 grain, 19.2 gallons. Salt, 80 lbs. Spice mix, 3 lbs. 10 oz.

Container fill-vacuum. For glass bottle. Recommended Average fill 14.1 oz. Vacuum range 22+.

b. Processing

The mixed batch is to be heated (in a tubular pre-heater) to 230 degrees F. - 235 degrees F., then de-aerated (using two inches of vacuum) and filling at 195 degrees F. Containers are to be held 30 seconds before cooling to 104 degrees F. maximum prior to any intent to case (store in boxes). Cases should be stored upside down.

4. Tomato Sauce (see figure 6 of Annex 1)

Finished: 7.2 degrees Brix

Prepared from a mixture of tomato residue and tomato juice. Tomato juice is to make up not less than 30% of this mixture. The mixture is subjected to concentration by heat. The use of an atmospheric vessel subjecting the product to heat and agitation, and by evaporation through vacuum pans and heat application to evaporate water.

Specifications for Finished Product

Specific gravity control range	1.040-1.0450
Viscosity control range	17-30 seconds
Salt control range	1.6-1.8%

When the product acquires the correct specific gravity, it is pumped into mixing tank(s) and mixed with ground, disintegrated peppers, salt, spices, and sugar in measured quantities to produce the correct soluble solids, gravity and product flavor.

The makeup of a sauce formula could be as follows:

Concentrated juice-residue mixture	200 gallons
Corn syrup (1) or dextrose (2)	2 gallons (1) or 20 lbs. (2)
Salt	28 lbs.

Microground Cayenne pepper	6 oz.
Disintegrated bell peppers	4 lbs.

The mixture is blended, pumped to a holding tank, moved by a sanitary positive displacement pump to process the product into a 3-stage high temperature short-time pasteurizer. The sterilized product is kept in holding tuber at about the same temperature previously attained, and coded.

The sauce is pumped to filling machines, canned, and sealed by a closing machine. The sealed cans are washed by a high temperature spray of water and then conveyed through a hot can holding pattern for 3 minutes for sterilization assurance. The cans are then spray cooled and the cooled cans are discharged to the cable conveyor line, and dried by forced air current prior to labeling.

Fills - Vacuum - For 8 oz. can size. Fill weight 8.1 oz. minimum vacuum 8 inches.

5. Whole Peeled Tomatoes

a. Selection of lots

Tomatoes, both round and pear types, should be selected for good color and size suitable for whole tomato packs. They should be ripe, firm, and have good peeling qualities. Lots running with high pH should be avoided.

b. Preparation

Peeling - Tomatoes may be steam or lye peeled (for lye peeling, a lye strength of 10-15% is sufficient).

Coring - Tough inedible cores are to be removed by hand. Over coring is to be avoided as it causes breakdown during subsequent handling.

Canning - Tomatoes are to be selected and filled into cans so as to meet drained weight and grade requirements. Over-filling should be avoided as this causes breakdown and may lead to spoilage from under processing.

c. Fills - Vacuums

Desired fill is 93% for can size

No. 303	16.11 oz.	10-15 inch vacuum
No. 2	19.59 oz.	10-15 inch vacuum

Salt is to cut out at 0.70% (+ 0.05% in finished product)

Calcium chloride for firming product can be added to give a 0.025% (+ 0.003%) added, calcium in finished product. Cans are then filled with tomato juice before closing.

d. Processing

Still retort system, using steam flow closing.

Continuous pressure cookers, using steam flow closing.

No. 2 1/2 size. 34 minutes at 230 degrees F.

A and B atmospheric cookers, steam flow closing.

Cook to center temperature of 206 degrees F. This requires about 37 minutes at 211 degrees F. for 2-1/2 and smaller sizes.

e. Tomato Puree

- Finish hot break pulp through 0.033 screen.
  1.07 specific gravity, and 1.066 specific gravity.

- Concentrate to required specific gravity.

- Fill at temperature of not less than 202 degrees F.

- Invert and hold hot for 3 minutes.

- Cool to not higher than 111 degrees F. before placing in a case.

f. Fills - Vacuums

Average 93% fill. Table weight 106 oz. Fill at 108.8 oz. with 5-12 vacuum. 1.07 specific gravity. 104 oz. Fill at 107.8 oz. 5-12 vacuum.

6. Tomato Paste

The sequence in the manufacture of tomato paste is practically the same all over the world. The fruit should be mature, sound with full color, and of a variety having good solids consistency.

a. Washing Unit and Sorting Line

Almost all maufacturers of washing equipment have produced tomato washers of basically similar design. One of the better methods is to dump into a receiving tank and then to convey the tomatoes to the production line by means of flumes. The transfer flumes can be considered as a pre-washer unit. Flumes now divert tomatoes into a second wash tank and either a rotating fruit pickup reel or a chain, rollers convey or take the tomatoes out of the tank to the sorting table. Sorters stand on either side of the line and remove the waste material.

b. Crushers

There are a number of crushing units, rollers, rotating beaters, some incorporate the crusher in the pulp heating assembly. The crushed tomatoes falling directly out of the breaking unit into the feed hopper of the heater. (manzine system.)

c. Pre-Heater

Heating in open tanks by steam coils is still carried out in some plants, but most have been replaced by tubular heaters.

d. Juice Extraction

The pulp, coarsely broken and pre-heated is then pumped to a series of "cyclone" units for screen finishing.

1. Evaporation

In the process of concentration of the pulp, several types may be used:

Single pass or recirculating - The product may be circulated by pumping and heat convection and the heat exchange surface may be tubes or cylinders.

A two-stage evaporation system - is essentially a batch process and is very versatile, for short production runs. The vapors from the vacuum pans (boules) are used as the heating media for

the vertical-tube pre-concentrator (termed as inverted double effect). Evaporation to 12% solids level takes place in the pre-concentration with little effect on the color of the pulp (despite fairly high temperatures) and after transfer to the vacuum pans, agitation by rotating paddler is applied and further concentration continues in the thickening paste.

Continuous evaporation system - This system is being carried out in more and more factories, having a number of advantages. Better flavor in the finished product due to lower temperatures employed through the concentration cycle (the maximum temperature in the final stage does not exceed 143 degrees F.).

Prominent systems are the Rossi and Catelli, and the Manzini systems. For example, the Manzini evaporator consists of a single cylindrical vessel which handles two evaporation stages. The first stage takes place in the upper part of the cylinder by circulation of the tomato pulp through a nest (calandrie) of tubes heated by the vapors from the second stage below. This pre-concentration takes place at a temperature of 40 degrees - 42 degrees C. and the juice collects by gravity in the lower part of this upper chamber. It is then drawn into the lower part of the vessel where the thickening pulp is made to circulate through a set of annular concentric walls heated by primary steam.

2. Steam

Circulation is forced by means of a specially designed centrifugal pump. The paddles of a rotary agitator revolve outside the heating walls and prevent dead areas forming when processing very thick products, and thus avoiding "burn-on".

Other evaporator systems: "Turbo-Film," Votator. Chemetron Corporation, "Taste," International Machinery Corporation, A.D.V. Computer Inc., A.K. Robins Proc. Machinery, F.M.C.

3. Pre-Heater Sterilizers and Fillers

After concentration, the tomato paste is transferred by pumping to the reservoir tank of the filler. From this tank the paste is pumped through heat transfer tubes to the filler nozzles and the temperature is raised to 194 degrees F. (these tubes may be heated by hot water or steam). When the nozzles are open the paste flows out into the cans. When closed, the paste returns through a special pipe to the storage reservoir.

For paste (larger size container) rolling cans under atomized water sprays is necessary to increase the rate of cooling.

D. Manufacture of Fruit Products from Pineapple, Banana, and Strawberry

1. Pineapple

The pineapple has its probable origin in Brazil or Paraguay. Although South America is the ancestral home, the pineapple in this area is relatively small compared to Hawaii, Malaysia, etc. Hawaii produces 80% of the world production of juice.

The major importing countries are the United States, Japan, Canada, Argentina, and various European countries.

Pineapple constitutes the second most important fruit in the world for processing. More than 600,000 tons are processed. Hawaii produces 50% of processed pineapple.

The United States alone consumes 80% of the Hawaiian whole ring canned production, and a large part of the production of Taiwan, The Philippines, and Malaysia.

a. Processing

Pineapple juice can be obtained from several places on the processing line:

- pressing the shell scrapings from the ginaca unit (which peels the pineapple and forms the cylinder from which the slices are made.

- from the prices from the canning line, from fruit too small for canning, and from drainage from the crushed pineapple operation.

The solid material is shredded by various machines and filtering aids added before going to a hydraulic press. The liquid material is heated to coagulate some of the solids and the resulting thin slurry is passed through a continuous centrifuge, removing most of the suspended solids, including the fibers and other small pieces.

Pineapples too small for canning may be peeled and pressed for juice by machines similar to those used for pressing out oranges, or they may simply be crushed, heated or pressed.

Juices may be homogenized to stabilize the slighty cloudy appearance.

b. Pineapple concentrate

Frozen pineapple juice concentrate is used both as a beverage base in 6 and 8 oz. cans and as an important ingredient in the manufacture of blended fruit drinks (e.g. pineapple - grapefruit).

Pineapple juice concentrate is juice that is concentrated in multiple - effect vacuum pans. Juice can also be concentrated in vacuum pans which operate at temperatures below 140 degrees F.

Fresh pineapple juice at approximately 12 Brix is concentrated to 60 - 65 Brix for remanufacturing purposes, or to 45 Brix for the retail market.

Bulk pineapple concentrate is used as an ingredient for mixing with citrus concentrate in the production of fruit blends. Pineapple concentrate is also used as an ingredient in the production of many types of canned fruit drinks.

A most popular combination has been a pineapple-grapefruit drink that has reached a volume on the world market, that is approximately that of single strength pineapple juice.

2. Banana

Approximately 1/2 of the bananas produced in the world are simply consumed as fresh fruit.

The more important canned banana products are listed as puree, in baby foods, bakery goods and in tropical fruit cocktail (usually a mix of pineapple, mango and banana). Bananas are also canned as drinks, slices, and as pastes.

Banana puree is usually processed in No. 10 cans or in 55 gal. drums by the aseptic canning process. Large quantities of puree are used in the manufacture of baby foods by "Gerbers," "Heinz," and other companies. Large quantities are also consumed by the ice cream and baking industry, mostly in the form of puree. One major cake maker, "Sarah Lee," imports only prime quality - whole peeled fruit in 55 gallon containers that are frozen and transported by cargo ship from Central America. Germany is a major consumer of bananas, fresh and processed.

a. Banana Puree

Raw material

Bananas are harvested when the internal cut flesh has a translucent appearance with a full banana flavor. Peeling yields depend on a number of factors, and varies from 57 to 67%.

Acidification and Vacuum steam blanching.

Peeled and trimmed fruit together with 0.4% by weight of citric acid and placed in a vacuum tumbler blancher. The vessel is evacuated using a 2-stage steam ejecter. The vacuum is then broken by admitting steam at 2 psi. This takes about 1/2 minute, the steam pressure is maintained for approximately 7 minutes to heat the puree to 200 degrees F. (93.5 degrees C).

b. Screw pressing

The pulp is now discharged from the vacuum tumbler blancher at 200 degrees F. into a preheated screw press, with screw running at 380 rpm and with a 25 psi air pressure on the solids discharge cone.

c. Canning

Puree is discharged from the screw press at 185 degrees F. (85 degrees C.) and filled directly into plain cans without leaving a head space. The cans are then inverted.

Mr. Robert Maloney provided the following summation relating to United Fruit Company's Banana marketing to processing sectors:

- Puree for U.S. and European markets is only prepared in La Lima, Honduras and Changuinola, Panama. From 5-8% of the total production from the two banana divisions are directed to the manufacture of puree. This represents approximately 75% of useable culls. 80% is shipped in 55 gallon drums, the remainder in No. 10 cans.

- Whole frozen bananas are packed out only in Honduras. Packed in plastic bags and then placed in 25 lb. cartons.

- Sliced banana in heavy syrup produced at La Lima and Changuinola. Packed in No. 10 cans.

- Producing a small amount of dried banana flake to use in orange-banana juice drink.

- In Golfito, Costa Rica, waste green bananas are converted to starch for glue for corrugated boxes.

- In Columbia, waste fruit (green) is reduced by high temperature and run through a dehydration mill to make cattle food.

3. Processing strawberry syrup

There is one plant in California that utilizes cull (sound) fruit, over ripe and green berries of sound quality - puree in a Rietz disintegrator, to which infusorial earth and a pectic enzyme are added. The mixture is allowed to stand for several hours or overnite to permit the enzyme to hydrolyze most of the pectin, resulting in a product that can be pressed out, pressed in a combination bag press and filter. (Harris press).

The juice is then concentrated at low temperature under vacuum to a light syrup.

The volatile flavor esters are condensed and concentrated to a highly flavored essence. About 1 gallon of essence is obtained for each 100 gallons of concentrate. The two are combined later at the point of use, which could be the preparation of fountain syrups, jellies, etc.

Volatile essence recovery is now a common practice in the manufacture of a number of fruits, including pineapple juice concentrate, concord grape. Essences of strawberry, apple etc. are available commercially.

Preparation of strawberry concentrate and product utilization.

Berries usually unsuitable for use in fresh market and frozen packaging may be used for making frozen strawberry juice concentrate for jelly manufacture. Concentrates permit accurate control in the formulation of jelly. Some lots of single strength juice tend to form more or less permanent gels during storage, and are difficult to disperse in making jelly. With concentrates, these gels are enzymatically prevented during processing.

Method:

The juice is prepared by pulping cold, sound, whole berries through a 1/4 inch screen in a hammer mill. Filter aid is added to the chopped berries in amounts of 3-10% and the slurry is pressed in a bag-type press (usually a 70-80% yield can be expected).

The cloudy press juice is immediately treated with pectic enzymes to degrade the pectic substances. This will permit production of a clear, stable juice and prevents jelling in the concentrated product. (This treatment consists of adding pectic enzyme to the juice in a concentrate of 0.5% and holding for 3 hours at 75 degrees F. The filter aid is added to a concentrate of approximately 0.25% and the juice is now clarified in a plate filter).

The clear depectinized juice should be concentrated as rapidly as possible to avoid deterioration of its color and flavor. When natural circulation evaporators are used (calandria heaters or external heat exchangers) the maximum boiling temperature should not be more than 100 degrees F., or a maximum B.P. of 1.9 inches Hg to avoid flavor and aroma deterioration.

In order to retain "full flavor", essences can be recovered and then mixed into the concentrate. Both should be packed in enameled plastic - lined bag containers, frozen and stored at 0 degree F. or lower (-18 degrees C.).

Special advantages to jelly makers:

Will obtain better color and flavor by using concentrates than in using single strength juice.

The use of fruit juice concentrate, not only eliminates much of the evaporation required, but permits continuous manufacturing of jelly by combining metered streams of fruit juice concentrate, sugar syrup, and pectin solution. In this process, sugar syrup is heated separately to a high temperature, thus the flavor and color of the concentrate are protected from heat damage by confining heat treatment to a minimum - no evaporation is required.

Frozen concentrate plus essence is particularly suitable for the continuous jelly manufacturing - line flow, producing excellent quality.

4. Manufacture of Fruit nectars, juices, A-D drinks from fruit concentrates.

Manufacture of the above can be made from fruit concentrates received in larger containers which are machine opened. Screened and pumped to a hold transfer unit to a stainless steel mixing tank. Pulp is mixed with citric acid and sugar solution (syrup or liquid sucrose), and water added.

The batch is mixed, and the pH, brix and viscosity are checked. The mixture is blended by "lightning" type units, and then pumped through a sanitary positive displacement pump to the same high temperature short time pasteurizer. The mixture is then sterilized and cooled in the same manner as above, and thereafter pumped to filling machines.

Containers are filled automatically, closed by machine after packing under vacuum. Containers are then washed, conveyed to the belt spray cooler and held in holding section and cooled. From this point, cans are discharged to the can label line, dried by air current and moved onto the labelling operation.

Equipment required, product reconstitution:

Industrial type container opener.

50 plus gallon dump tank with screen.

Waukesha 25 DO vari-drive pump.

250 gallon batch Kettler, with mixers No. 90.

Waukesha 55 DO pump. Vented cover.

250 gallon de-aerator and vacuum pump.

Waukesha 55 DO pump.

250 gallon Hold tank, with steam coil and controller.

FMC 6 valve juice filler with change parts.

Canco seamer with change parts. Model 601.

Automatic level control for de-aerator.

Flat top conveyors. Can washer. Spray cooler. Labeller.

Piping, valves, hydraulic and electrical controls.

Water requirement-200 gpm.

Steam requirement-800 lbs/hour average.

(1500 lbs/hr. at peak = 50 H.P.)

Will operate,

3 container sizes.

100 cpm. 800 lbs. fruit concentrate, weight per hour.

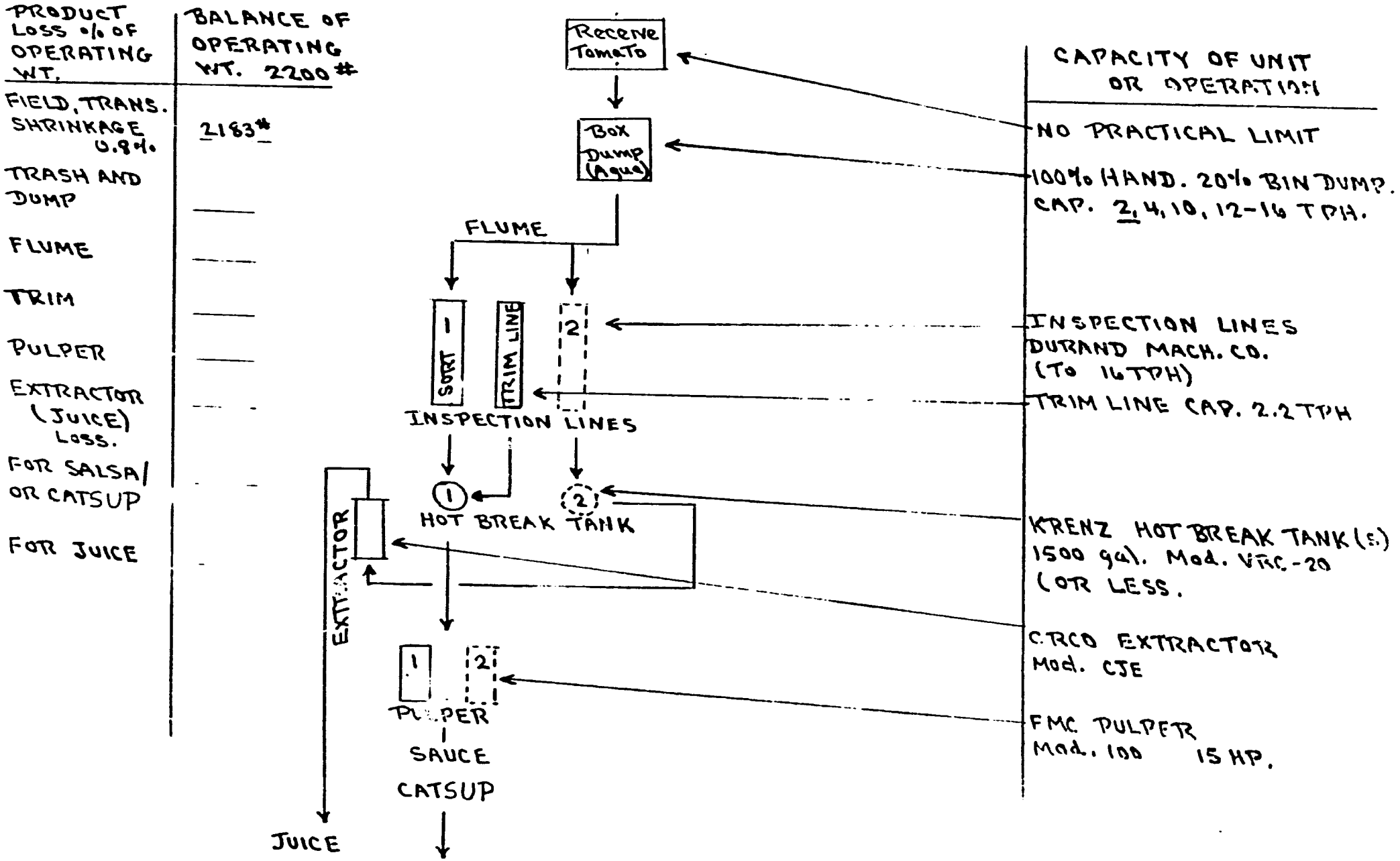

ANNEX I - Figure 1

Cull inspection, size sorting, maturity sort - packing Bin system for Fresh Market Tomato.

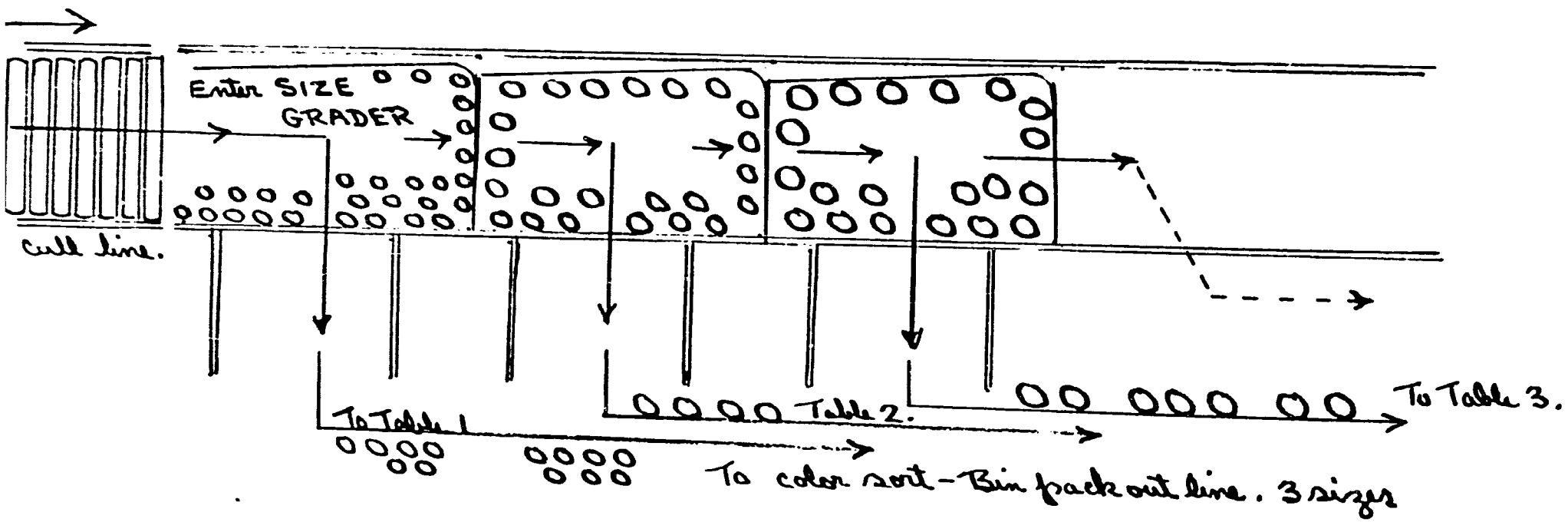

ANNEX I - Figure 2

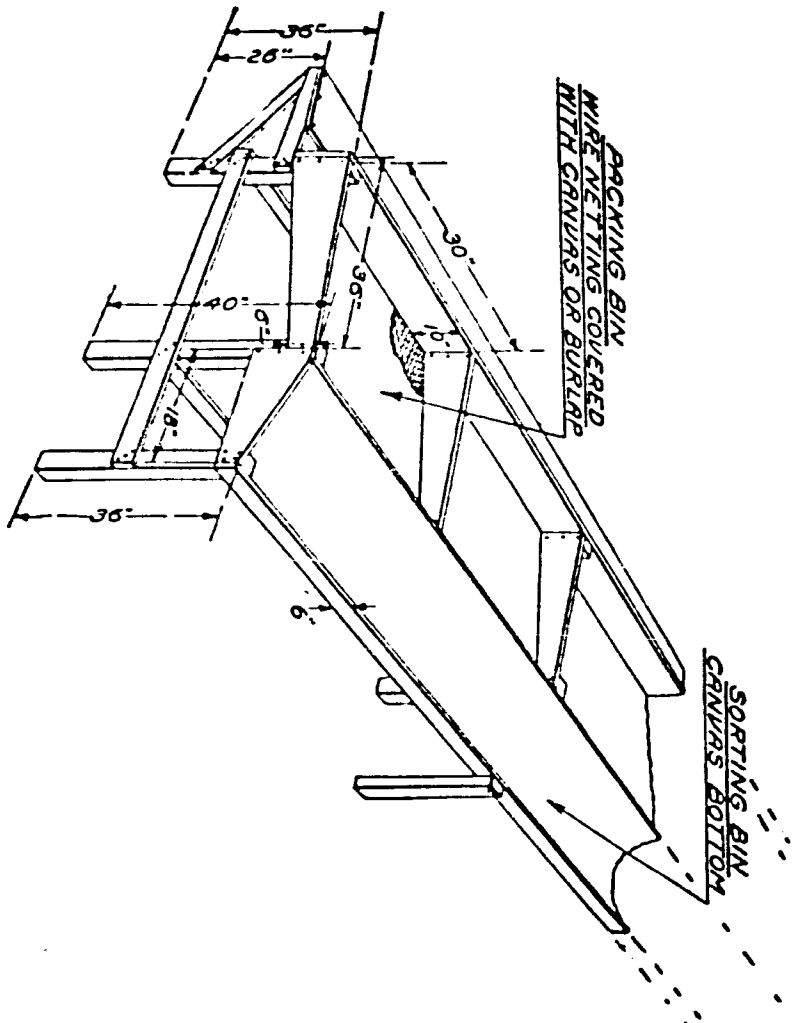

ANNEX I - Figure 3

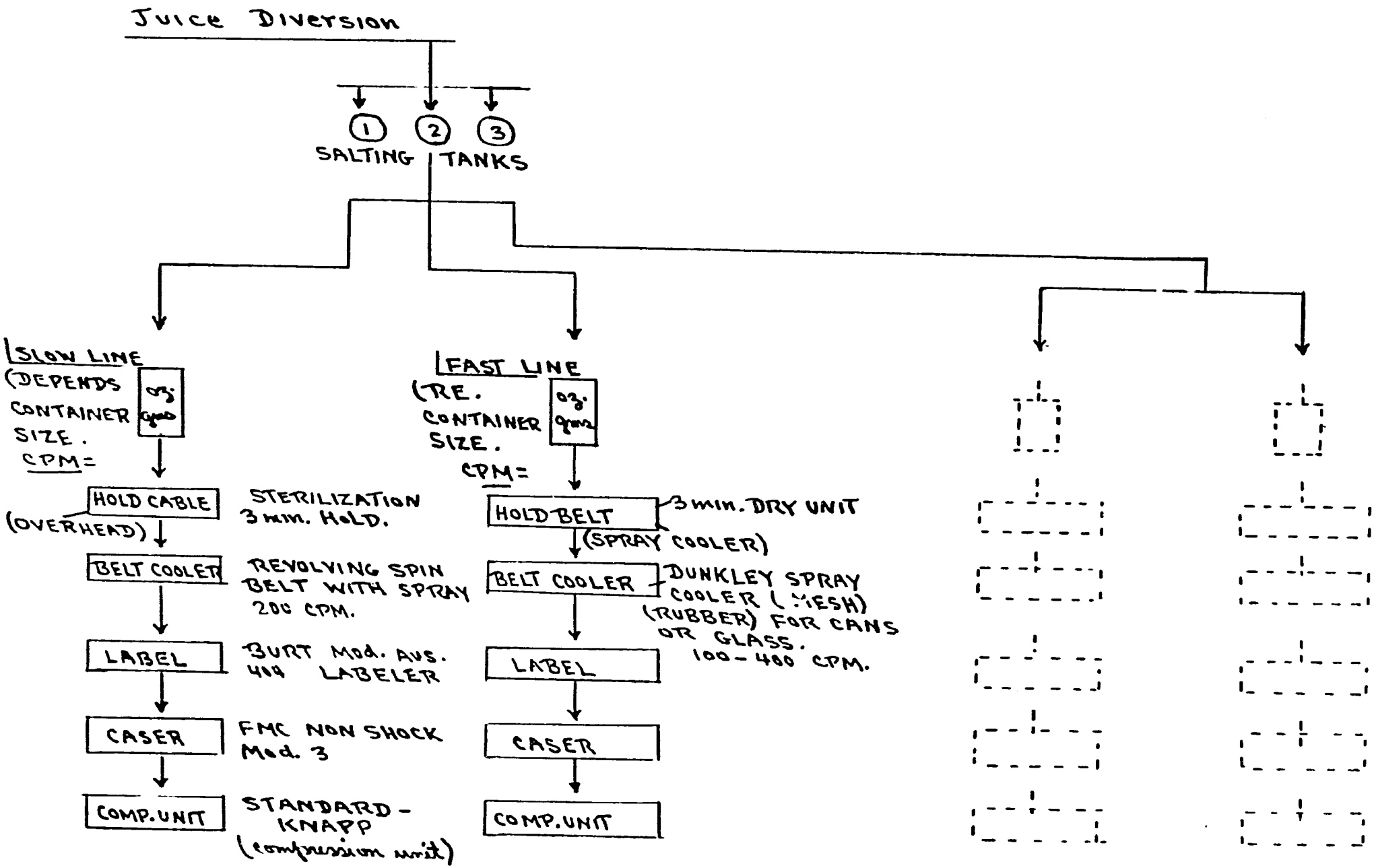

ANNEX I - Figure 4

CATSUP DIVERSION

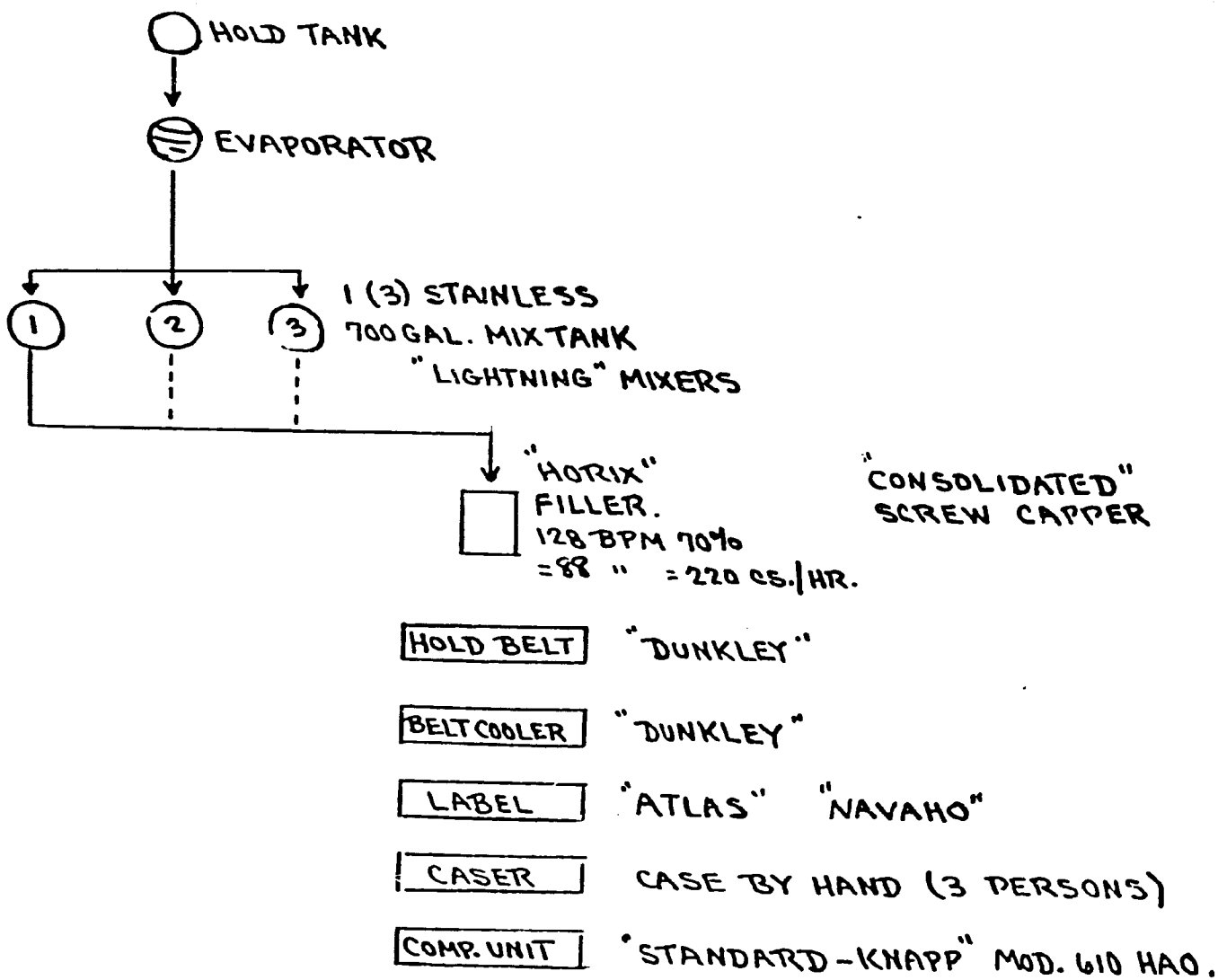

ANNEX I - Figure 5

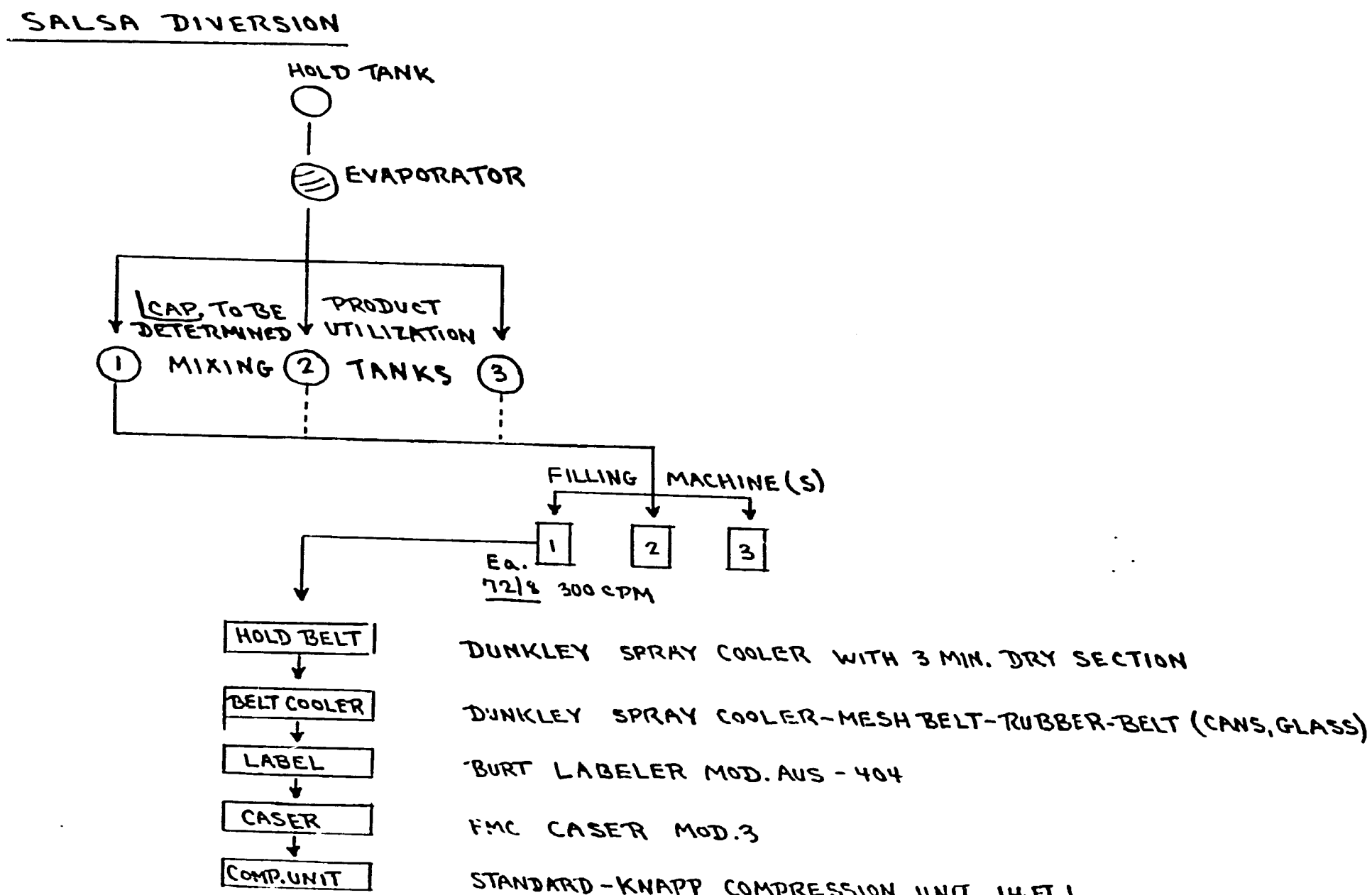

ANNEX I - Figure 6