PD-AAI-373
ISN 262

521-0124/42

UNCLASSIFIED

UNITED STATES INTERNATIONAL DEVELOPMENT COOPERATION AGENCY
AGENCY FOR INTERNATIONAL DEVELOPMENT
Washington, D. C. 20523

HAITI

PROJECT PAPER

FAMILY PLANNING OUTREACH

AID/LAC/P-085

Project Number:521-0124

UNCLASSIFIED

AGENCY FOR INTERNATIONAL DEVELOPMENT

PROJECT DATA SHEET

1. TRANSACTION CODE: A (A = Add, C = Change, D = Delete) — Amendment Number: _____

DOCUMENT CODE: 3

2. COUNTRY/ENTITY: Haiti

3. PROJECT NUMBER: 521-0124

4. BUREAU/OFFICE: LAC — 05

5. PROJECT TITLE (maximum 40 characters): Family Planning Outreach

6. PROJECT ASSISTANCE COMPLETION DATE (PACD): MM 09 DD 30 YY 86

7. ESTIMATED DATE OF OBLIGATION (Under 'B.' below, enter 1, 2, 3, or 4)
A. Initial FY 81 B. Quarter 4 C. Final FY 85

8. COSTS ($000 OR EQUIVALENT $1 =)

A. FUNDING SOURCE	FIRST FY 81 B. FX	C. L/C	D. Total	LIFE OF PROJECT E. FX	F. L/C	G. Total
AID Appropriated Total	480	373	853	6,745	2,870	9,615
(Grant)	(480)	(373)	(853)	(6,745)	(2,870)	(9,615)
(Loan)	( )	( )	( )	( )	( )	( )
Other U.S. 1.						
Other U.S. 2.						
Host Country			-	-	6,555	6,555
Other Donor(s)			-	720	1,090	1,810
TOTALS	480	373	853	7,465	10,515	17,980

9. SCHEDULE OF AID FUNDING ($000)

A. APPROPRIATION	B. PRIMARY PURPOSE CODE	C. PRIMARY TECH. CODE 1. Grant	2. Loan	D. OBLIGATIONS TO DATE 1. Grant	2. Loan	E. AMOUNT APPROVED THIS ACTION 1. Grant	2. Loan	F. LIFE OF PROJECT 1. Grant	2. Loan
(1) PN	444	440				9,615		9,615	
(2)									
(3)									
(4)									
TOTALS				-0-		9,615		9,615	

10. SECONDARY TECHNICAL CODES (maximum 6 codes of 3 positions each): 450 | 510 | 244 | 740

11. SECONDARY PURPOSE CODE: 534

12. SPECIAL CONCERNS CODES (maximum 7 codes of 4 positions each)

A. Code	BRW	BUW					
B. Amount							

13. PROJECT PURPOSE (maximum 480 characters)

To assist the GOH to establish a cost effective National Family Planning Program.

14. SCHEDULED EVALUATIONS
Interim MM 07 YY 83 | MM YY | Final MM 07 YY 85

15. SOURCE/ORIGIN OF GOODS AND SERVICES
☐ 000 ☒ 941 ☐ Local ☐ Other (Specify) _____

16. AMENDMENTS/NATURE OF CHANGE PROPOSED (This is page 1 of a _____ page PP Amendment.)

17. APPROVED BY
Signature: Harlan Hobgood
Title: Director, USAID/Haiti
Date Signed: MM DD YY 08 21 81

18. DATE DOCUMENT RECEIVED IN AID/W, OR FOR AID/W DOCUMENTS, DATE OF DISTRIBUTION
MM DD YY

AID 1330-4 (8-79)

UNITED STATES INTERNATIONAL DEVELOPMENT COOPERATION AGENCY
AGENCY FOR INTERNATIONAL DEVELOPMENT
WASHINGTON D.C. 20523

PROJECT AUTHORIZATION

Name of Country: Haiti

Name of Project: Family Planning Outreach

Number of Project: 521-0124

1. Pursuant to Section 104 of the Foreign Assistance Act of 1961, as amended, I hereby authorize the Family Planning Outreach project for Haiti involving planned obligations of not to exceed Nine Million Six Hundred Fifteen Thousand United States Dollars ($9,615,000) in grant funds ("Grant") over a five-year period from date of authorization, subject to the availability of funds in accordance with the A.I.D. OYB/allotment process, to help in financing foreign exchange and local currency costs for the project.

2. The project ("Project") consists of assisting the Government of Haiti ("Grantee") to establish a cost-effective national family planning program by implementing activities in the following areas: (i) management improvement; (ii) services improvement; (iii) community outreach; (iv) contraceptive retail sales; and (v) population policy stimulation.

3. The Project Agreement, which may be negotiated and executed by the officer to whom such authority is delegated in accordance with A.I.D. regulations and Delegations of Authority, shall be subject to the following essential terms and covenants and major conditions, together with such other terms and conditions as A.I.D. may deem appropriate:

a. Source and Origin of Goods and Services

Goods and services, except for ocean shipping, financed by A.I.D. under the Grant shall have their source and origin in the United States, in Haiti or in countries included in A.I.D. Geographic Code 941, except as A.I.D. may otherwise agree in writing. Ocean shipping financed by A.I.D. under the Grant shall, except as A.I.D. may otherwise agree in writing, be financed only on flag vessels of the United States, Haiti or countries included in A.I.D. Geographic Code 941.

b. Condition Precedent to Initial Disbursement

Prior to any disbursement, or to the issuance of any commitment documents under the Project Agreement, the Grantee shall, except as A.I.D. may otherwise agree in writing, furnish to A.I.D., in form and substance satisfactory to A.I.D., an operational plan for the first year of the Project, such plan to include:

(i) proposed staffing by the Grantee's Department of Public Health and Population ("DSPP") and its Division of Family Hygiene ("DHF") for each activity under the Project;

(ii) DSPP/DHF budgetary allocations for each activity under the Project;

(iii) planned disbursements for support for Action Familiale, financing of mini-projects (including prospective sub-grantees and activities to be supported) and research contracts (including prospective researchers and the type of research to be supported); and

(iv) an implementation plan outlining DSPP/DHF inputs for each activity under the Project.

c. Condition Precedent to Disbursement for Renovation

Prior to any disbursement, or to the issuance of any commitment documents under the Project Agreement, to finance renovation or rehabilitation of health facilities, the Grantee shall, except as A.I.D. may otherwise agree in writing, furnish to A.I.D., in form and substance satisfactory to A.I.D., information on the population to be served and/or any other basis for selecting each facility to be renovated or rehabilitated, a schedule for equipping and staffing each facility, the estimated cost and proposed contractor, the architectural plan and proposed physical modifications, and a brief description of the planned services which will ultimately be provided in the facility.

d. Covenants

Except as A.I.D. may otherwise agree in writing, the Grantee shall covenant and agree:

(1) to furnish at the beginning of each year of the Project to A.I.D., in form and substance satisfactory to A.I.D., a revised and updated operational plan, as described in section 3.b. above, for each such year, together with a report of the Project activities, expenditures and results for the year preceding each such year;

(2) to carry out Project activities in accordance with relevant United States legislation on family planning, as from time to time may be explained in Project Implementation Letters;

(3) that it will continue to provide sufficient annual budget allocations following completion of A.I.D. financing under the Project so as to assure continuity of the Project activities, including maintenance of Project funded equipment, supervision by health personnel of the activities which were funded under the Project, and salary support for key personnel;

(4) to consider all possible ways and means of progressively increasing its revenues available for family planning so as to lessen the dependence on external donor contributions; and

(5) to consider formulation of an official population policy giving family planning high priority in the context of improved family well-being and in the context of demographic goals.

Marshall D. Brown
Acting Assistant Administrator
Bureau for Latin America
and the Caribbean

Sep 26, 1981
Date

Clearances:

GC/LAC:BVeret: date 9/23
LAC/CAR:BKosheleff: date 9/
LAC/DR:ILevy: date 9/24/81

GC/LAC:GMWinterfeldt:9/15/81:x29182

PROJECT PAPER

FAMILY PLANNING OUTREACH

TABLE OF CONTENTS

	Pages
I. PROJECT SUMMARY AND RECOMMENDATIONS	
A. Recommendation	1
B. Summary Project Background	1
C. Summary Project Description	2
D. Summary Financial Plan	3
E. Project Development Committee	5
F. Issues	5
II. PROJECT BACKGROUND	11
A. Population Problem in Haiti	11
1. Problem Statement and Background	11
2. Project Strategy	20
B. USAID Assistance Strategy	21
1. Relationship to Mission CDSS Strategy	22
2. Relationship to Mission Programs	23
3. Other Donor Assistance	25
III. PROJECT DESCRIPTION	25
A. Goal and Purpose	25
B. Project Activities	26
1. Strengthen DSPP/DHF Program Management Capability	26
2. Improvement of the Quality and Quantity of Clinical Family Planning Services	32
3. Expansion of Community and Private Sector Support for Family Planning	48
4. Commercial Program	56
5. Population Policy	63
C. Beneficiaries	72
D. Anticipated End of Project Status	73

Pages

IV. PROJECT ANALYSES 77

A. Technical Analysis 77

B. Social Soundness Analysis 84

C. Institutional Analysis 91

D. Economic Analysis 101

E. Financial Analysis and Plan 110

V. PROJECT IMPLEMENTATION 120

A. Implementation Plan 120

B. Disbursement Procedures 122

C. Procurement and Contracting Procedures 122

D. USAID Monitoring Requirements 123

E. Evaluation Plan 125

F. Conditions Precedents, Convenants and Special Provisions 126

ANNEXES

A. Statutory and Other Exhibits

Exhibit 1. Section 611(e) Certification

Exhibit 2. Grantee's Application for Assistanc

Exhibit 3. Draft Project Authorization

Exhibit 4. Statutory Checklist

Exhibit 5. PID Approval Cable

Exhibit 6. Initial Environmental Examination

B. Logical Framework

C. Supplementary Program Data

1. Organization Charts

a. Existing
b. Proposed

2. Summary Results of DHF Community Program in 1980

3. Exhibits

D. Supplementary Financial Notes

1. Projected Title I Contributions of GOH Over LOP
2. GOH Salary Payments - Current
3. GOH Salary Payments - Future
4. A.I.D. Contributions to DHF Salary Payments

E. Background Notes on Economic Analysis

F. Executive Summary of Management Study of DHF

G. Porter Novelli Report on Focus Groups

H. CDC Report on Contraceptive Distribution and Logistics, June 30, 1981. (can be found in USAID/Haiti and LAC Bureau Files)

LIST OF TABLES

		Page
Table 1	Summary of Planned Financial Resources, Project 521-0124 FY 1981-1985	4
Table 2	The Components of Population Growth Rate in Haiti, 1970-1980	13
Table 3	Distribution of Health Facilities and MCH/FP Clinical Outlets by Geographic Region, 1980	16
Table 4	Facilities Offering FP/MCH Services and New FP Acceptors by Geographic Region, 1980	18
Table 5	Projected Cumulative Number of DSPP Facilities Providing Complete MCH/FP Services by year of Project	19
Table 6	Summary of AID Inputs by Sub-Activity and Year over Life of Project	27
Table 7	Strengthening FP Program Management Capability - Planned AID Inputs	31
Table 8	Schematic Representation of Five-Tiered Health Services System Model for Haiti	34
Table 9	Planned AID Inputs for Services Improvement by Activity (Not including VSC Activities or Contraceptives)	41
Table 10	Planned Support for Voluntary Surgical Contraceptive and Expected Outputs Over Life of Project.	45
Table 11	Total Planned AID Inputs for Services Improvement Over Life of Project	47
Table 13	Planned AID Inputs for Community Outreach Activities	55
Table 14	Planned AID Support for Establishing a Contraceptive Retail Sales Program	62
Table 15	Planned AID Inputs for Population Policy Development	71
Table 16	Estimated Couple Years of Contraceptive Protection Generated by Sub-Activity and Method Over Life of Project	75

		Page
Table 17	Planned Contraceptive Distribution by Sub-Activity and Commodity during Project Period 1982-1985	76
Table 17a	Institutional Linkages Within Health Districts	94
Table 18	Project Financial Plan - Inputs by Fiscal Year	111
Table 19	Summary of Planned Program Inputs by Sub-Activity over Life of Project	112
Table 20	Planned GOH Contributions to the National MCH/FP Program	115
Table 21	Planned Family Planning Outreach Obligations and Expenditures of AID Funds	117
Table 22	Comparison of AID and GOH Salary Support for the DHF over Life of Project	119
Table 23	Project Implementation Plan - Major Milestones, Documentation and Implementation Schedules	121

I. PROJECT SUMMARY AND RECOMMENDATION

A. Recommendation

The Project Committee recommends approval of a grant in the amount of $9,615,000 over a five-year life-of-project to assist the Government of Haiti (GOH) to establish a cost-effective national family planning program.

B. Summary Project Background

Haiti, with a population of 5.5 million and only 8,000 km^2 of cultivated land, faces the increasingly difficult task of building a modern nation. Accelerating population growth and reduced emigration possibilities increase population pressure on the land and confound the economic development hopes of Haitian leaders. Health measures such as malaria and yaws control and increasing use of vaccines against childhood diseases during the past 40 years have upset the traditional balance between births and deaths and increased demographic pressure. Having only its underdeveloped manpower resources, the tropical sun and the limited cultivable land as natural resources, Haiti remains an agricultural country. And yet, each year with erosion, deforestation and increasing population pressure on the land, the yields decline; more topsoil disappears into the sea; and food imports mount to feed the growing population.

---

* NOTE: USAID estimates the 1980 population of Haiti at 5.5 million persons. Since the 1971 census (4.3 million inhabitants) various surveys and projections have attempted to factor urbanization, migration, mortality and fertility into the population growth rate equation with obviously different emphases and results. Estimates both higher and lower than those used in this paper are commonly used. Until the 1982 census data is available, the demographic data used here should be viewed as an approximation, representing demographic trends. Thus, in the absence of definitive Haitian statistical data, the fugures throughout the project paper should be viewed as indicative and not conclusive.

In planning for national economic and social development, Haitians are becoming increasingly aware of the negative impact of continued population growth on achieving national development goals and objectives. Despite natural disasters, heavy outmigration, and poor health conditions, the rate of natural increase has nevertheless accelerated from less than 1.8 percent annually in the 1960's to 2.3% in 1981. Lack of access to convenient family planning services of adequate quality is a key problem which must be faced by the Haitian Government in its efforts to cope with population growth and to achieve national development goals. This project will address this problem by assisting the GOH to establish a cost-effective national family planning program by building upon an existing network of private and public organizations which provide basic services to the Haitian populace.

C. Summary Project Description

The proposed five-year project will cost an estimated $17,980,000.[1/] AID will provide $9,615 million in population grant funds, the United Nations Fund for Population Activities (UNFPA) will contribute $1.810 million and the GOH will provide $6.555 million as their contribution. The project goal is to assist the GOH to improve the health and the social and economic welfare of the Haitian poor. The purpose of the project, to assist the GOH to establish a cost effective national family planning program, will be accomplished through the following activiites:

1. improvement of the organization and management of the national family planning (FP) program;
2. improvement of the quality and quantity of maternal and child health and family planning (MCH/FP) services;
3. expansion of the participation of private and voluntary organization, other governmental and local community groups in providing MCH/FP services; and,
4. increase in the availability of contraceptives at reasonable prices through rural and urban commercial channels;
5. formulation of appropriate population and family planning policies.

1/A.I.D. is prepared to consider additional assistance under the commercial retail sales component of the project once the results of marketing research activities are known.

When the project has achieved its purpose, all government health facilities and an estimated 75% of private facilities will actively counsel and provide appropriate family planning services; integrated models of community health and family planning services will have been developed to serve 60% of the population; contraceptives and basic drugs will be available at reasonable subsidized prices throughout the country; and, the number of continuing users of effective contraceptive methods will be equivalent to 25% of target population (i.e. women aged 15-45 at risk of pregnancy).

The project will be implemented primarily by the Department of Public Health and Population (DSPP) and its Division of Family Hygiene (DHF). A discussion of the roles, responsibilities and interaction of the DSPP and DHF is found in the Institutional Analysis, Section IV C. The Project will finance the purchase of contraceptives, medical supplies and equipment, local salaries, per diem and transport costs, local and foreign training, reimbursement for voluntary surgical contraception, technical assistance, evaluation, operations research, information, education and communication (IEC) materials and skill development training and promotional expenses associated with family planning in general and may include expenses for a commercial contraceptive marketing program when detailed plans have been developed and approved.

D. Summary Financial Plan

The total cost of the project is estimated to be $17,980,000. AID will contribute $9.615 million or 54% of total project cost in grant funds; UNFPA will contribute $1.81 million or 10% of total project cost and the GOH will provide $6,555,000 or 36% to the total project. If adequate FY 1982 funds are available, USAID/Haiti plans to obligate $1.7 million to provide a carryover for the initiation of activities in FY 1983 prior to the obligation of FY 1983 funds. Because project implementation is planned by fiscal year, early fiscal year obligations are planned. This is discussed further in Part V, Project Implementation and shown in Table 21.

Table I which follows provides a summary of planned project inputs over the life of project.

Table 1

SUMMARY OF PROJECT 521-0124, PLANNED FINANCIAL RESOURCES, 1982-1985 1/
(In U.S. dollars)

A. U.S. Contribution

I. Bilateral Grant	1981/82	1983	1984	1985	LOP
A. Medical Supplies	71500	85800	99900	111100	368300
B. Equipment/Renovations	62800	59925	56770	55918	235413
C. Training	116910	114660	117870	102755	452195
D. Salaries	277037	232859	203950	179529	893375
E. Transport/Perdiem	209996	215704	208162	196962	830824
F. Allowances/Bonus/Fees	132880	174560	177530	183500	668470
G. Short-term Consultant	125000	86000	136700	75810	423510
H. Service Contracts	266500	312500	270500	195500	1045000
I. Evaluation/OR	26000	44000	102700	81930	254630
Total Bilateral Grant	1,288623	1,326008	1,374082	1,183004	5,171717
II. Centrally Purchased Contraceptives 2/	1,064377	1,342370	1,739523	2,041113	6,187383
Subtotal Planned AID inputs	2,353000	2,668378	3,113605	3,224117	11,359100
Plus Contingency 5%	-	125500	140900	144500	410900
Total AID Inputs	2,353000	2,793878	3,254505	3,368617	11,770000 3/
B. GOH Contribution	1,104198	1,464890	1,832248	2,153433	6,554769
C. UNFPA Contribution (Anticipated)	450000	460000	450000	450000	1,810000
GRAND TOTAL	$3,907198	4,718768	5,536753	5,972050	20,134769

1/ In addition, support from AID/W funded activities is estimated at $830,000.

2/ See Table 14 page 62 for a detailed breakdown of condoms, pills, foam tablets and copper clad IUD's to be ordered.

3/ The A.I.D. contribution is actually $9,615,000 since $2,155,000, representing estimated costs for Phase II (pilot testing) and Phase III (national extension) of the commercial retail sales component, were deleted from the project to await the results of marketing research activities. See Table 19 for a detailed financial plan.

E. Project Development Committee

1. USAID Staff

P.S. Gibson	- Population Officer
J.M. Russell	- Chief, Public Health Division
W.S. Rhodes	- Project Design & Coordination Division
F. Egi	- Program Division
R. Leonard	- Controller's Office
A. Fitzcharles	- Private and Voluntary Development Division
R. Gibson	- Regional Contract Service Officer

2. TDY Assistance

R. Corno	- Population Officer, LA/DR
A.C. Kubisch	- Program Analyst, BATTELLE
S.R. Schaeffer	- Capital Development Officer, LA/DR
D. Shapiro	- Economist, Penn State
J.N. Smucker	- Community Organization Specialist

F. Issues

1. GOH Political Commitment

As with most other projects in Haiti, the question of GOH commitment to this Project must be raised, even if it cannot be fully answered. In general, USAID/Haiti believes that GOH's political commitment to a national family planning program is growing and may well be greater now than at any point in the past. There is evidence that the urgency of the demographic situation in the country is beginning to be fully understood at the highest levels. In the President's April 7, 1979 statement on family planning, he called specific attention to "the benefits of birth control and the value of the concept of the small family in the context of balanced socio-economic development". His statement is considered by DSPP and DHF officials to constitute overall Presidential approval and support for their programs. Also, recent statements made by GOH officials to the U.S. Refugee Task Force concerning the great need to reduce fertility and population growth pressures in Haiti through effective voluntary family planning indicate that the problem is now receiving greater recognition and higher priority by the GOH. Although Haiti remains a Catholic country, the GOH appears increasingly willing to provide high-

level public support to a national family planning program of the type proposed in this project paper.

2. Budget Considerations

a) GOH Financial Commitment and Project Financed Salary Support

In spite of an increasing political commitment to a national family planning program, the willingness and ability of the GOH to increase its financial support to the program remains in doubt. The DHF, as noted has been funded in the past largely by external donors. As recently as 1981, the UNFPA and AID paid the salaries of most of the staff of the central DHF and until 1978 the UNFPA provided salary supplements to some 420 DSPP/DHF employees working in the MCH/FP area. In 1978 the GOH assumed payment of the salary supplements of approximately 350 of these field personnel, through the use of P.L. 480, Title I, local currency generations. The DSPP and the DHF clearly recognize the need for the GOH to assume an increasing portion of the operating costs of its programs. This recognition was dramatically reinforced in 1980 when the UNFPA abruptly cut its funding of the DHF in mid-year, nearly forcing extensive lay-offs and salary reductions. Only an AID authorizatio of additional use of GOH Title I funds to cover these costs prevented a substantial reduction in DHF operations.

The financial situation of the GOH is currently poor, and it is doubtful that the allocations of funds from the Public Treasury to support the necessary expansion of population and family planning activities warranted by the demographic situation (for the family planning program) can be increased adequately in the near future. Furthermore, the GOH has indicated it is unable to pay for project activities with loan funds. Loan financing for this project seems inappropriate since the GOH is not financially strong enough to repay such a loan. Thus, while this project will be entirely grant-funded, an increasing Haitian contribution to the basic core costs of the program as well as to the outreach activities is programmed. The financial weakness of the GOH makes it difficult for USAID/Haiti to insist upon its policy of not using project grant funds to pay salary or operating costs. As noted in the FY 1983 CDSS, this policy may be waived where such costs are associated with experimental outreach activities in critical areas such as family planning. The CDSS further notes that a phase-out plan for operating cost support

will be utilized in the family planning project, and the finaicial plan of this Project reflects that statement. Table 1 and Table 22 illustrate the USAID strategy to reduce project-funded salary support by over 10% annually throughout the life-of-the project, using FY 1982 as the base year.

USAID/Haiti considers family planning to be of such high priority and so critical to development in Haiti that the phasing-out of operating cost support will of necessity be more gradual than with any other AID-financed project in Haiti. The DSPP and DHF are fully aware of USAID's policy and strategy in this regard and have agreed to the plan for an eventual phase-out of AID project support for salaries and operating costs in all public health and population projects.

b) UNFPA Contribution

Due to the increasing concern that UNFPA may be unable to share this joint project, the design is such that this project will be free standing of UNFPA funding. If full funding were available from UNFPA, it would further enhance the project and the development of MCH/FP services. However, presently it appears that UNFPA's contribution to project activities may be 40% less than the planned amount ($3.1 million) or only $1.8 million. With the decrease in UNFPA assistance, the US becomes the largest donor to Haiti for population and family planning activities. This financial cutback has accelerated GOH involvement in MCH/FP. Support to the public health infrastructure provided by AID's RHDS project has helped absorb some of the funding cuts.

There is the strong probability that the UNFPA will stretch out its assistance to the Haitian MCH/FP program beyond the 1984 planned project completion. In the past UNFPA assistance has focused on expanding and improving the clinical facilities which provide MCH/FP services. The relatively generous support in the past for medical equipment and expendible MCH supplies and drugs will not be possible with the reduced funding. The UNFPA has already divested itself of the bulk of salary support for

DHF core staff, but continues to support headquarters operating expenses. USAID Haiti has urged the UNFPA to concentrate its limited funds on inputs complimentary to those provided by either this FP Outreach project or the RHDS project such as additional general clinical training, provision of Lippes loops, aerosol vaginal foam, and MCH drugs which are relatively expensive in the U.S. We conclude that even with reduced funding, UNFPA participation in the project is valuable and offers options and access to the UN family resources which complement the planned AID contribution.

c) Recurrent Costs

During the past seven years, 95% of the MCH/FP program has been donor funded. USAID/Haiti believes that salaries are the responsibility of the host country and this project's budget reflects both an annual decrease in AID project-financed salaries and an annual increase in salary contributions from the GOH national budget during the life of the project.

In reference to contraceptives, it is anticipated that adequate revenue will be generated from the commercial sales so that their cost can be eventually absorbed through the GOH program, although not within the life of this five-year project. In addition, some of the recurrent costs for salaries and operational expenses will be funded by GOH P.L. 480, Title I funds. (This is shown in Table 20 in Section IV E). However, given the level of poverty in Haiti and the lack of GOH resources, we can anticipate continued AID support and assistance to FP/MCH activities beyond this project, if funding is available.

3. DHF Managerial Capability

Questions have been raised as to (1) the management capability of DHF and (2) the possibility of using other private sector agencies to promote and manage this project. USAID/Haiti considers the DHF and its staff to be among the most professionally competent and dedicated of any GOH agency and believes that the DHF has the administrative capability as well as the technical expertise which is necessary to carry out this project. As to the possibility of using private sector agencies to manage the project it should be noted that, under Haitian laws, the DHF is delegated management responsibility and no Haitian private agency capable of undertaking this task is available.

4. Integration of the DHF Program into DSPP National Health System

The RHDS Project Agreement contains a condition precedent that prior to disbursement for project acitivities subsequent to Year Two, the Ministry of Health and Population (DSPP) must furnish plans and schedules for integrating the programs of the DHF, Malaria Control (SNEM) & the Bureau of Nutrition (BON) with the national health system administered by the DSPP. The financial integration of the BON has already begun with the recently amended RHDS Project and nutrition activities will be a part of the basic health services provided in rural areas. With respect to SNEM, after an extensive evaluation of the malaria control program, it was determined that a premature administrative merger of SNEM into the DSPP would cause dislocations to the program and impede current efforts which are reducing the high malaria incidence in Haiti. Therefore, USAID and the DSPP have agreed by Project Implementation Letter to postpone the integration of SNEM into the DSPP until the malaria incidence is at a significantly lower and more manageable level.

Regarding the DHF, it should be stated that this Division of the Ministry has never carried out a "vertical" or "parallel" program in the sense that SNEM has. Although MCH/FP activities have been almost completely funded by outside donors, the services have been and are now delivered through and by DSPP health personnel and facilities. The DHF is and will continue as a Division of the DSPP. In the past, due to the weaknesses in the Ministry's administrative and logistical systems, the DHF has taken on operational support tasks to assure the implementation of MCH/FP services in the regions and districts. The DHF anticipates being able to divest itself of these administrative tasks and to focus more exclusively on its MCH/FP policy planning and technical support roles as the Ministry's administrative support systems are substantially strengthened through the Rural Health Delivery System Project. In the past, the DHF has focused its efforts to expand and improve MCH/FP services on clinical services delivered in fixed facilities while innovating in the increased use of paramedicals and community involvement.

The training of health agents and community health workers by the DHF has demonstrated to the DSPP and the health community the value of preventive activities in combination with treatment facilities. During the next four years the DHF will continue its efforts to improve the quality and quantity of MCH/FP services available in Ministry of Health hospitals, health centers and dispensaries as a routine part of basic health services. As a normative technical division of the DSPP, the DHF should also continue its efforts to explore more effective means of developing MCH/FP services consistent with probable Haitian Governmental and private resources in the next 3-5 years.

To facilitate the fiscal integration of DHF activities with those of the DSPP, this project provides AID funding on a fiscal year basis matched by increasing annual GOH contributions for salaries and operating expenses. Since the RHDS project is helping the DSPP plan a unified procurement of drugs and expendible supplies, MCH drugs and supplies are not included in this project and DSPP dispensaries, health centers and hospitals will receive their MCH drugs and supplies henceforth through the improving DSPP logistics support program. By 1984 the vehicle repair system being developed with RHDS project support should be able to maintain and repair DHF assigned vehicles and only funds for maintenance and spare parts have been budgeted in FY 1984 and FY 1985. Integration of MCH/FP activities into the services routine has already begun at the regional and district level. Since regions and districts have been underfunded for the basic health tasks they must perform, resources channeled to them by the DHF for MCH/FP field supervision and training have been much appreciated. As budgets become decentralized the demands on the DHF for funding services and activities in peripheral areas will lessen. We conclude that integration is well underway and can only be fully accomplished when DSPP administrative support and service delivery structures are in place and functioning. Integration and the role and function of the DHF are more fully discussed in the Institutional Analysis section of this project paper.

II. PROJECT BACKGROUND

A. Population Problem in Haiti

1. Problem Statement and Background

Haiti is the poorest country in the Western Hemisphere. It is rural, agricultural and subject to the vagaries of its tropical climate which bring uncertain rains to its mountains and plains. Overexploitation and neglect of the land, natural disasters (hurricanes, floods, droughts) and constant, growing population pressure on the available cultivable land have left the agricultural resource base eroded and depleted. Population density approaches 700 persons per sq km of arable land, among the highest such ratios in the world.

Indicators at both the household and national level reflect the severe deprivation of the Haitian population.

- Life expectancy is 51 years and one in six children dies before its first birthday.
- Thirty-three percent of children under four years exhibit stunting.
- Eighty percent of the population is illiterate; only one of every thousand children who enter primary school is expected to complete high school.
- The amount of arable land per person is less than one hectare.
- Per capita income is $240.00 per annum; in rural areas, the average income is estimated to be approximately $40.00 per year.
- The growth rate of the capital city is 6.1% per annum, reflecting the heavy stream of migrants from rural areas seeking employment. Unemployment among new migrants to urban areas is at least twice that of city dwellers.

In response to the poverty and lack of opportunity, Haitians migrate at an estimated rate of 35,000 per year (the figure is probably closer to 45,000), often taking extraordinary personal risks to do so. Furthermore, current and projected demographic conditions confound efforts geared toward alleviation of this poverty. Continued high fertility at 40 births per 1000 places severe economic strain on the Haitian family. The youthful age structure (42% of the population is younger than 15) requires that each working age adult must provide not only for him/herself but also for a dependent. If the population which is now under 15 years of age experiences the same fertility rates as the previous generation, the country's population will double in twenty-six years. With the anticipated declines in mortality as health services expand, doubling time will decrease.

Population growth appears to be accelerating despite still high rates of infant and child mortality, significant emigration and declining fertility. Government projections are shown in Table 2. The seeming paradox of accelerating population growth in the face of declining fertility can be explained by improvements in health infrastructure and increased access to health care, (i.e. a decline in neo-natal tetanus, malaria and yaws), improved roads which permit food and people to move in response to localized shortages, an increased use of donated food to help the poorest survive when disaster strikes, and by a projected decline in emigration.

Table 2

THE COMPONENTS OF POPULATION GROWTH RATE IN HAITI, 1970-2000

Period	Crude Birth Rate	Crude Mortality Rate	Average Rate of Emigration	Growth	Average Annual Growth Rate
	(per 1000 pop)	(per 1000 pop)	(per 1000 pop)	(per 1000pop)	(Percent)
1970-1975	37.01	16.20	4.86	15.95	1.595
1975-1980	36.78	14.48	4.42	17.88	1.788
1980-1985	35.58	13.00	3.61	18.97	1.897
1985-1990	33.51	11.52	3.29	18.70	1.870
1990-1995	30.89	10.18	2.19	18.52	1.852
1995-2000	28.29	9.09	2.01	17.10	1.710

Haitian Institute of Statistics, 1980.

Although there is some evidence that population concerns have prompted the Government's greater focus on employment, rural development and primary education, there is presently no articulated national population policy. The President has issued statements over the last two years which recognize the deleterious effects of Haiti's population density and growth rates on economic development and family welfare. The President's wife recently visited Jamaica and her visit to the Jamaican Family Planning program was given wide publicity; subsequent press releases have stressed the need for a more aggressive government program to meet the demand and need for family planning services in Haiti. The Government is beginning to recognize that high emigration and mortality rates are not an appropriate nor adequate response to the high crude birth rate or the serious population pressures within Haiti. An articulated population policy will facilitate government planning in all sectors. The DHF has set its own target for reduction of the crude birth rate, yet without overt high-level government concurrence and support, this goal cannot be realized.

Inadequate access to convenient services remains a key problem impeding the widespread acceptance of family planning which is necessary to reduce population growth and achieve national development goals. Expanded voluntary use of modern contraception offers the chance both to stem growth (by reducing fertility) and to enhance the social and economic stability of the Haitian family while longer term development takes place. Demand exists: the problem is access to quality services.

a. Governmental Responses

In 1971, the Government of Haiti recognized family planning as a means of reducing infant and maternal mortality and authorized family planning services delivered in the context of family health. Population was added to the responsibilities of the DSPP and the DHF was created to develop and coordinate a national program of maternal and child health and family planning. Despite substantial progress since MCH/FP services

were first sanctioned by the government, effective access to family planning services does not yet exist. Table 3 presents the geographical distribution of family planning and health facilities throughout Haiti

Impediments to family planning access reflect the current state of development in Haiti, its history, culture and geography. Neither the government health system nor the many missionary facilities which are oriented to alleviating and treating illness are yet fully capable (in staffing and orientation) of effectively promoting and protecting health through MCH and FP, which are basically preventive services. The priority which the GOH places on health service delivery is not high: in 1978-79, only 6.1% of the development budget was spent on health. As much as 80% of health expenditures in Haiti are financed through foreign assistance, including PL 480 programs.

Planning and management in the health sector have, historically, been poor within the Haitian government. Few data are available to facilitate accurate planning and there are few technicians who are trained to exploit and recommend policies based on those statistics which are available. However, training is only part of the equation. Advancement and sense of participation in something worthwhile are as essential as are the tools to perform the task. Poor management, in terms of lack of delegation and poor cooperation and communication among technicians with varied skills, contributes to lack of motivation among government health workers. All of these factors have led to the concentration of government health facilities and staff in urban areas. It is the missionary and private voluntary organizations which provide 50-70% of the currently available health care in rural areas.

The DSPP and the DHF are aware of the limitations of the government health infrastructure in the delivery of family planning services. Foreign assistance permitted the expansion of MCH/FP which has occurred since the mid-1970's; however, this support has been inconsistent recently, further hampering program expansion. Since 1978, the DHF has been quietly

Table 3

DISTRIBUTION OF HEALTH FACILITIES 1/ AND MCH/FP CLINICAL OUTLETS 2/ BY GEOGRAPHIC REGION, 1980.

Districe/Region	1981 1/ Est Population	Total Private Mixed and DSPP Health Facilities								Facilities Offering	
		Dispensaries			Health Centers		Hospitals/HC with Beds				
		DSPP	Mixed	Private	DSPP	Mixed	DSPP	Private	Total	Only MCH	FP/MCH
National Total	5,500,000	146	34	115	41	23	25	19	403	83	119
South Region	1,120,000	30	17	17	21	2	5	1	93	7	39
North Region	755,000	28	7	23	7	4	3	1	73	22	33
Port-de-Paix	305,000	19	4	14	1	1	2	1	42	13	7
St. Marc	400,000	6	-	9	-	-	6	2	23	13	4
Gonaives	305,000	12	1	4	-	1	1	1	20	2	3
Hinche	275,000	12	-	7	2	-	1	-	22	3	3
Belladère	290,000	3	-	2	-	1	1	-	7	-	5
Jacmel	290,000	19	-	2	-	-	1	-	22	2	2
Petit-Goâve	325,000	6	-	4	2	2	1	-	15	2	5
West	390,000	3/	3/	3/	3/	3/	3/	3/	3/	4	10
Metro Area	985,000	11 3/	5	33	8	12	4	13	86	11	9

Source: Semiannual Report "Activities of MCH/FP"
Evaluation and Research Section, DHF, DSPP October 1980.

1/ USAID estimate
2/ Evaluation and Research Section, DHF, DSPP 1981
3/ West and Metro combined

exploring alternative means of extending MCH/FP services to the people through other governmental service networks, local community organizations and subsidized commercial contraceptive sales. The purpose of this project is to build on this base in order to assist the DSPP/DHF to establish a truly national family planning program which effectively will reach 60% of the population. The DSPP and DHF agree that a national program requires that private and governmental agencies, in and outside the health sector, work together to achieve comprehensive family planning coverage.

b. Demand for Family Planning

Despite substantial progress since MCH/FP services were first sanctioned by the government, widespread knowledge of and effective access to family planning services does not yet exist. Table 4 presents a summary table of family planning service outlets and new acceptors in 1980. Haitians are extremely health-conscious, therefore, as they become convinced of the safety and efficacy of modern contraceptive techniques through culturally relevant information, the use of FP services will increase. Table 5 projects the cumulative increase in DSPP facilities offering complete MCH/FP services by year of project.

According to the recently published results of the Haitian Fertility Survey, 17.7% of women aged 15-49 in union in 1977 were using traditional methods of contraception (e.g. withdrawal, douche, abstinence). Of women with 4-5 living children, 72.2% wanted no more children.

Operational research under the DHF's household distribution project in 1979 and 1980 found very high acceptor rates (up to 52%) from door to door canvassing.

These figures, though not conclusive, do suggest that there is a sufficient and increasing demand for family planning technology among both men and women in Haiti to justify a large scale delivery program.

Table 4

FACILITIES OFFERING FP/MCH SERVICES AND NEW FP ACCEPTORS BY GEOGRAPHIC REGION, 1980 (AS REPORTED TO DHF)

	Facilities Offering FP & MCH								New Acceptors	
	Only MCH	Hosp	HC w/beds	HC	Disp.	Total Clinical Facilities	FP Only FADH disp	FP Only Com. Councils	Men	Women
Haiti Total	83	13	13	11	82	119	63	194	59067	33776
South Region	7	2	5	2	30	39	4	29	6201	5326
North Region	22	1	2	2	28	33	16	87	5555	4691
Port-de-Paix	13	1	2	-	4	7	5	-	5173	2587
St. Marc	13	2	1	-	1	4	4	-	3225	1666
Gonaives	2	1	-	-	2	3	31	8	453	363
Hinche	3	1	-	-	2	3	5	16	4131	938
Belladere	-	1	-	1	3	5	3	20	1868	1003
Jacmel	2	1	-	-	1	2	2	14	1277	777
Petit Goave	2	1	1	1	2	5	2	-	1784	1024
West	4	-	1	1	8	10	6	20	4747	3390
Metro Area	11	2	1	4	2	9	13	-	24153	11011

Source: Evaluation and Research Section, DHF.

Table 5

PROJECTED CUMULATIVE NUMBER OF DSPP FACILITIES PROVIDING COMPLETE MCH/FP SERVICES

BY YEAR OF PROJECT

	FY 1982	FY 1983	FY 1984	FY 1985
Hospitals	13	13	13	13
Health Centers with beds	6	8	10	15
Health Centers without beds	14	20	30	41
Dispensaries	75	100	135	200
TOTAL	108	141	188	269

2. Project Strategy

Voluntary family planning offers Haitians the means of putting themselves in control of their lives and fertility. A successful national family planning program offers the Government of Haiti a cost-effective way to boost per capita income, increase literacy and improve health status, while reducing the negative results of continuing population growth,e.g. high unemployment, malnutrition, high infant mortality, need for food imports.

It is increasingly apparent that Haitians are aware that having more children threatens their precarious economic status. Contraceptive services (condoms, pills and foam) have been well-received in the Armed Forces dispensaries and in rural cooperatives and community councils, where comprehensive maternal and child health services are not yet available. This project is designed to extend and improve this access to family planning.

The project strategy is to build and expand upon an existing infrastructure of private and public facilities and networks delivering health, agriculture, education and social services to the Haitian population. The strategy involves private voluntary agencies, other non-health public agencies, the armed forces and the local communities themselves to create awareness of and support for family planning. Family planning will become an integral part of all preventive maternal and child health services. However, since access to and utilization of MCH services in fixed facilities is limited, the project will explore, develop, and refine alternative methodologies for broadening access to services, including making contraceptives (and perhaps other basic health products) available through commercial networks at modest prices. The proposed interventions have already been tested on a pilot scale or have been part of the current services package. The Haitian program has now evolved to a stage in its development which permits the planning and execution of family planning activities on a truly national scale.

B. USAID Assistance Strategy

1. Relationship to Mission CDSS

In its most recent Country Development Strategy Statement(CDSS), USAID/Haiti identified population density and continuing population growth as critical impediments to economic development and efforts to improve health status in Haiti. Increasing access of Haitians to family planning services is seen as a major means of improving and protecting the health status of the most vulnerable groups--fertile women and children under three years of age. Family planning is also a means of strengthening the Haitian family both economically and socially so that it can participate more directly in the national development process. The Mission strategy is also to strengthen the basic rural preventive health infrastructure and reduce mortality, morbidity and malnutrition; family planning services are an integral element of these basic services. AID's Rural Health Delivery System Project (RHDS - 521-0091) is aimed at extending basic health services into rural areas by investments in physical plant, by training community level paramedical staff, by improved management of the health system and by designing more effective support systems for transport and drug supply.

Our strategy calls for collaboration with the UNFPA and other donors in assisting the Government of Haiti to implement its national plan. AID family planning assistance will focus on outreach and the management systems necessary to effectively enlarge Haitian access to family planning services, whether through the health system or through other service networks. This Family Planning Outreach Project will support Haitian efforts to make family planning services available through the health services framework where appropriate or by utilizing other more direct means of enlarging access to services. By utilizing already existing services networks of the Armed Forces, ONAAC, the Department of Agriculture, the commercial marketing system or radio and mass communication, all segments of the Haitian community can be mobilized to support the national program. This multifaceted approach to family planning is consistent with Mission development strategy to reduce population pressure and to strengthen local institutions.

2. Relationship to Mission Programs

AID's participation in rural FP outreach services began in 1975. The AID first-phase project (521-0071) focused on training, information and education, and program supervision. AID funds were also used for constructing and equipping training centers in Port-au-Prince and Croix-des-Bouquets as well as salary supplements for clinic staff in a pilot clinic in the Cul-de-Sac. In December 1976, Project 0071 was extended through CY 1977 to enable the planning and preparation of a larger more comprehensive follow-on project with the beginning of a shift in emphasis away from clinically-based services. During the period 1975-78, an active information, education and communication (IEC) program was launched. Radio programs, film showings and articles on family planning were published. Three training teams were formed to train health agents and "matrones" (traditional birth attendants).

In FY 1978, Project MCH/FP II (521-0087) was initiated to expand MCH/FP services. This project was ambitious. In retrospect the Project did not adequately recognize the weakness of the government health infrastructure and the vulnerability of the DHF to shifts in donor funding. A joint UNFPA/AID/PAHO/GOH program evaluation in mid-1979 pointed out the serious weaknesses in the MCH/FP clinical delivery system. Direct line authority for all health care services including MCH/FP rests with the District Medical Officer. Management improvement activities will upgrade their skills. The 1979 evaluation team report made a series of recommendations for DHF actions aimed at improving MCH/FP services in the context of DSPP health services infrastructure.

By 1980 the MCH/FP program had extended services into all districts and regions of Haiti. Some 123 health facilities (85% of which were part of the DSPP service network) provided complete MCH/FP services. Some 197 rural community councils in 7 different districts had active programs in FP and MCH. In these communities approximately 25% of the women aged 15-45 accepted contraceptives while about 50% of the men accepted condoms. (In several communities 40% of women at risk were contracepting). With the help of the Johns Hopkins PIEGO program, three to four doctors have been trained and certified in voluntary surgical contraception (VSC) techniques each year.

Despite this progress, as 1981 began, the DHF was increasingly aware that significant progress in family planning was happening outside DSPP facilities. The AID financed RHDS Project (0091) which will strengthen the DSPP ability to guide and manage the development of rural health services was just beginning. Its implementation will provide the necessary incentives and practical experience to enable the DSPP to shift from a largely clinical, urban-oriented program providing curative services to Port-au-Prince and a few other urban centers to a program emphasizing the delivery of preventive health care in rural areas through paramedical personnel working out of numerous small dispensaries and the local communities. The principal objective of the RHDS Project is to support the development of a community health service basedon dispensaries and the outreach of health agents. The RHDS project should result in a significant decrease in morbidity and mortality rates; it should reduce the birth rate, increase life expectancy at birth, decrease infant and maternal mortality rates, and reduce the incidence of malnutrition, especially among children. Its second objective is to bring about major improvements in the DSPP's management and administrative capability so that the DSPP will be able to provide the necessary support and leadership within the framework of a regionalized health service. Tangible improvements in basic MCH/FP services from the RHDS project are still twelve to eighteen months away.

C. Other Donor Assistance

The creation of the DHF was intended to structure and coordinate the relatively large sums of money being contributed by foreign donor agencies for family planning activities in Haiti. Initially the United Nations Fund for Population Activities (UNFPA) took the lead in providing funds ($746,000 during the period 1972-74) for pilot activities in the two public maternity hospitals in Port-au-Prince. The UNFPA designated the Pan American Health Organization (PAHO) as the implementing agency to oversee and monitor implementation of their program (UNFPA 4900).

In March 1974, a program evaluation by a UNFPA/DHF joint team concluded that the objectives of the pilot program had been met and a five-year program extension was developed. Initially services were to be extended to smaller urban areas outside the capital (April 1974 - December 1975). Then, during the period January 1976 - June 1979, the program expanded to rural areas using the existing rural health structure but also employing community outreach workers (community agents) and mobile clinics. Presently, in addition to Haiti's FP/MCH program, UNFPA also contributes to basic statistics and demographic analysis in two projects with the Ministry of Plan. The International Planned Parenthood Federation (IPPF) initiated a small contraceptive retail sales program in 1978 based on condom machines with rather disappointing results. The existence of broad-scale free distribution, the fragility of the condom machines used and lack of advertising were cited as reasons for the decline in average sales per machine from 75 pieces per month in 1978 to 35 in 1980. The DHF launched an over-the-counter program for sales of vaginal foam tablets in pharmacies in December 1980 with IPPF assistance. Pharmacy personnel were trained but there was no public promotion or advertising. Contraceptive marketing specialists provided by AID/W recommended a marketing survey before further expansion so as to more carefully design an expanded commercial program. Because of financial problems, IPPF has terminated its support.

III. PROJECT DESCRIPTION

A. Goal and Purpose

The goal of this project is to assist the Government of Haiti to improve the health and the social and economic welfare of Haitians and particularly of poor Haitian families. AID project support is aimed at achieving a substantial and sustained reduction in family size while improving health status. This is to be accomplished by a significant increase in the availability of high quality family planning information and services. This AID project compliments support to be provided by the UNFPA to assist the DSPP/DHF to implement an integrated national program of maternal and child health and family planning. It is also an important element of the overall AID health sector strategy and will constitute an adjunct to the Rural Health Delivery System Project, which aims at increasing access to basic preventive and curative health services in rural areas. The project also aims at assisting the GOH to develop appropriate development policies which respond to demographic dynamics, resource availabilities and basic human needs.

The project purpose is to assist the Government of Haiti to establish a cost-effective national family planning program by the end of project. The DSPP and its Division of Family Hygiene, which has been delegated responsibility for planning and coordinating all MCH/FP activities in the country, will be the primary implementing agencies of the Haitian Government. The establishment of an effective program will involve the coordination of five different sets of activities leading to achievement of five closely related but discrete sub-purposes. These are:

1) to improve the organization and management of public FP programs, so that they are results oriented, flexible and within Haitian means to support;

2) to improve the quality and quantity of MCH/FP services available to Haitians;

3) to expand community support for and participation in the provision of MCH/FP services by informing and actively motivating private and voluntary groups, non-health sector governmental agencies, community action councils and other Haitian service networks.

4) to increase the availability of contraceptives at reasonable prices through rural and urban commercial channels;

5) to design and articulate appropriate population and family planning policies and programs.

Each sub-purpose and the activities necessary to achieve it are discussed in a subsequent section. Each contributes to the achievement of the project purpose and interacts synergistically with the other sub-purposes. This articulation of sub-purposes and activities will facilitate more effective management and monotoring of project implementation. Table 6 shows a summary of planned AID inputs by sub activity.

B. Project Activities

1. Strengthen DSPP/DHF Program Management Capability

The Division of Family Hygiene has been able to launch and develop a broad spectrum of activities aimed at increasing the access of the people to FP information and services. Despite large foreign inputs, the program which has been clinical in focus, has been able to reach less than 10% of the eligible women. Where community outreach or vertical approaches have been tried in outreach programs, such as in the armed forces, results have been extraordinarily high. To transform these more innovative programs into an efficient national program will require modern management techniques and careful planning. Improved use of services statistics and streamlining of the information and decision-making systems are necessary. U.S. assistance aimed at improving program management will consist of short-term consultant assistance and in-country training. This assistance will complement assistance being provided by the RHDS project to improve the management of and the capacity of the DSPP to deliver services.

Table 6

SUMMARY OF AID INPUTS BY SUB-ACTIVITY

AND YEAR OVER LIFE OF PROJECT

Sub- Activity	FY 1981/82	FY 1983	FY 1984	FY 1985	LOP
1. Management Improvement (See Table 7)	$ 263,426	$ 188,658	$ 224,549	$ 167,490	$ 844,123
2. Services Improvement (See Table 10)	930,599	1,040,003	1,097,830	1,144,046	4,212,478
General FP Clinical (See Table 8)	771,191	847,193	879,479	915,734	3,413,597
Voluntary Surgical Contraception (See Table 9)	159,408	192,810	218,351	228,312	798,881
3. Community Outreach (See Table 11)	448,507	611,119	770,955	909,428	2,740,009
4. Contraceptive Retail Sales (See Table 12)	441,441	585,691	572,628	573,773	2,173,533 1/
5. Policy Development (See Table 13)	57,250	85,875	152,643	96,157	391,925
6. Contraceptive stock reserve/ orders	$ 211,777	157,032	295,000	333,223	997,032
Total Project	$ 2,353,000	$ 2,668,378	$ 3,113,605	$ 3,224,117	$ 11,359,100
Plus 5% Contingency	-	$ 125,500	$ 140,900	$ 144,500	$ 410,900
Grand Total AID Planned Inputs	$2,353,000	$2,793,878	$3,254,505	$3,368,617	$ 11,770,000

1/ The total A.I.D. contribution is actually $9,615,000 since $2,155,000, representing estimated costs for Phase II (pilot testing) and Phase III (national extension) of the contraceptive retail sales component, were deleted from the project to await the results of marketing research activities. A.I.D. is prepared to consider additional assistance under this component once the marketing research has been completed. See Table 19 for a detailed financial plan.

Planned activities aimed at management improvement are qualitatively more important than their dollar value. A baseline of information and recommendations for improving the DHF organizationally resulted from the May 1981 management appraisal team fielded by Westinghouse Health Systems under an AID/IQC. (An Executive summary of the management appraisal is in Annex F.) To move into improved management modalities, certain operational elements and administrative practices must become institutionalized. Improved use of service statistics will be a cornerstone of management improvement. Presently, masses of numbers are collected throughout the DSPP and collaborating health facilities. These numbers are summarized and receive partial analysis. With expanded analysis these statistics could contribute to improved management, if they could be collected and analyzed in a timely fashion. Planning for services is largely from the top down based on intuitive reasoning rather than on information gathered for decision-making. As program initiatives are expanded and efforts to streamline support systems move forward, an effective management information system will be essential. The organizational structure of the DHF, like that of the DSPP must be rationalized to support improved program management. A first step in organizational diagnosis has been made. A plan for consolidating the management of health support systems in the DSPP is being developed. Already it appears a planned shift to centralized generic drug procurement will provide financial benefits to the growing health services. Rationalization of the support services to eliminate duplication and maximize efficient utilization of existing DSPP service networks will characterize the next three years.

In order to prevent dislocations in on-going service programs the consolidation of administrative support systems must be carefully planned and phased. Modifications underway in the RHDS project will enable the DSPP to better manage the health system, but the DSPP does not yet have the administrative capability to adequately support services in peripheral areas. This project will provide consultant assistance to the DHF to assist in streamlining operations while extending and

improving FP/MCH services within the DSPP structure. We have estimated consultant assistance in the following areas:

Service statistics collection and analysis	4 person/month	$40,000
Personnel planning and job assessment	1 person/month	10,000
Management information specialist	1.5 " "	15,000
Rationalization of service specialist	2.5 " "	25,000
Organizational analysis and Diagnosis	4 " "	40,000
Management techniques	6 " "	60,000

French speaking expert consultants will be identified after detailed scopes of work have been developed with the DHF/DSPP. Consultants will focus on training and staff development. Once the scope of work and appropriate consultant candidates have been identified, USAID will contract for the work through a series of small contracts. Since several DSPP officials have already benefitted from advanced management training, we plan to involve them as well as other consultants in FP program management seminars and workshops. Seven months of additional short-term U.S. participant training in family planning program management is planned at institutions such as the University of Connecticut and University of North Carolina. Over the life of the project fifteen in-country management seminars focusing on the FP/MCH program and administrative management skills will assist in the strengthening of program implementation throughout the country.

Critical to a functioning management information system are operational research findings which verify or suggest more propitious program directions. The DHF with the assistance of operations research (OR) funds from AID/W and technical assistance from Columbia University will explore over the next 3 years the parameters under which community based programs can be expanded within the framework of rural FP/MCH services. This activity builds on a prior small scale OR household distribution project. The centrally funded OR activity will contribute to the DSPP/DHF capability to perform operations research. This bilateral project will also assist in strengthening the OR

capability but in a more focused emphasis on program management and operational analysis. For specifically OR activities we have budgeted a total of $157,418 ($84,310 for local research costs, $ 13,108 for DHF research Staff and $ 60,000 allocated for short-term consultant efforts).

Other inputs will include equipment such as a word processor with a bookkeeping capability that will enable DHF management to routinize many repetitive tasks. Modest operations research and studies aimed at simplifying management and program support will help to determine management issues such as supervision levels, minimum information requirements, appropriate delegation and decentralization, optimum staffing etc. A financial summary of AID inputs for the strengthening of F.P. program management is provided in Table 7.

Table 7

STRENGTHENING FP PROGRAM MANAGEMENT CAPABILITY-PLANNED AID INPUTS

	FY 82	FY 83	FY 84	FY 85	LOP TOTAL
I. AID DIRECT PAYMENT					
A. Commodities	$15,000	$ 1,100	$ 2,299	$ 1,864	$ 20,263
B. U.S. Training	10,000	5,500	12,100	6,655	34,255
C. Short Term Consultants	80,000	50,000	30,000	30,000	190,000
D. Allocated IEC	2,500	2,500	2,500	2,500	10,000
Sub-Total	$107,500	$ 59,100	$ 46,899	$ 41,019	$ 254,518
II LOCAL COST REIMBURSEMENT					
A. Salaries	$97,579	$ 69,211	$ 62,153	$ 55,164	$ 284,107
B. Evaluation/Operations Research	5,000	5,500	60,500	13,310	84,310
C. In-Country Training	3,000	4,500	4,500	7,500	19,500
D. Per Diem	37,697	37,697	39,497	39,497	154,388
E. Transport	12,650	12,650	11,000	11,000	47,300
Sub-Total	$155,926	$ 129,558	$ 177,650	$ 126,471	$ 589,605
Total Planned AID Inputs	$263,426	$188,658	$224,549	$167,490	$844,123

2. Improvement of the Quality and Quantity of Clinical Family Planning Services

The project will build upon and expand the services base developed during the past five years in collaboration with public and private health sector facilities. Health facilities which will deliver FP/MCH services will almost double from 123 to approximately 235.

As has been evident in the past, it is not enough that DSPP facilities be directed to provide FP/MCH services in the context of their other services. Personnel must be trained and facilities must be equipped and supplied. This project will provide assistance to the public and private health systems to expand and upgrade their capacity to provide quality services.

a. Clinical Delivery System

1) Public Health Facilities

The public health system can be viewed as being composed of three separate service delivery systems: a public, private and military health system. Below is a description of activities to be carried out by each sector. The DSPP operates and maintains 75% of the hospital beds and 50% of the health centers and dispensaries scattered throughout Haiti. The DSPP administers and manages this system through district health officers. This service network has evolved from a combination of local and central government initiatives to establish basic health facilities throughout the country. In many cases the facilities are rented or provided by the communities. Working conditions in these facilities provide little incentive. They are inadequately supplied and equipped to enable the assigned health personnel to function effectively. BID, PAHO and USAID currently have projects to upgrade the physical facilities as well as the organization and management of the services within the facilities.

The service model follows a five-tiered system (see Table 8) of referral. At the base of this system is a new cadre of health worker, the health agent, who will be the primary interface between the community and the health facility network. Although some agents have been trained and are working in rural areas, the full cadre is not yet in place. The RHDS project will train and put in place a network of 1500 health agents and the necessary supervisory structure over the next five years. Presently the basic health service unit is the dispensary backed up technically by the health center.

Planned project inputs are designed to complement the activities of the RHDS project and other donor activities in developing a primary health care system which includes family planning and maternal and child health services. These inputs are discussed below:

Skills training in fertility management for nurses, auxiliaries and doctors will continue with in-country courses organized by DHF. During 1981, Development Associates Inc. worked with the Division of Nursing and the DHF to revise the nursing and auxiliary curricula to include information on family planning, contraception, and skills training in screening, counseling, monitoring and prescribing family planning and contraceptives in their daily work. Newly introduced competency based methodologies in curriculum design and skills training should strengthen basic nursing education. Continued assistance of DAI in planning programs is anticipated.

In-service training in family planning for nurses, auxiliaries and health agents will be planned and coordinated with DSPP re-training in connection with the RHDS project. Basic training for nurses, auxiliaries and sanitarians has been almost entirely didactic with no supervised practical training in FP/MCH outreach techniques or client motivation and counseling. There are 3 nursing and 3 auxiliary schools in Cap-Haitien, Cayes and Port-au-Prince. This project will assist in creating

Table 8

SCHEMATIC REPRESENTATION OF FIVE-TIERED HEALTH SERVICES SYSTEM MODEL FOR HAITI

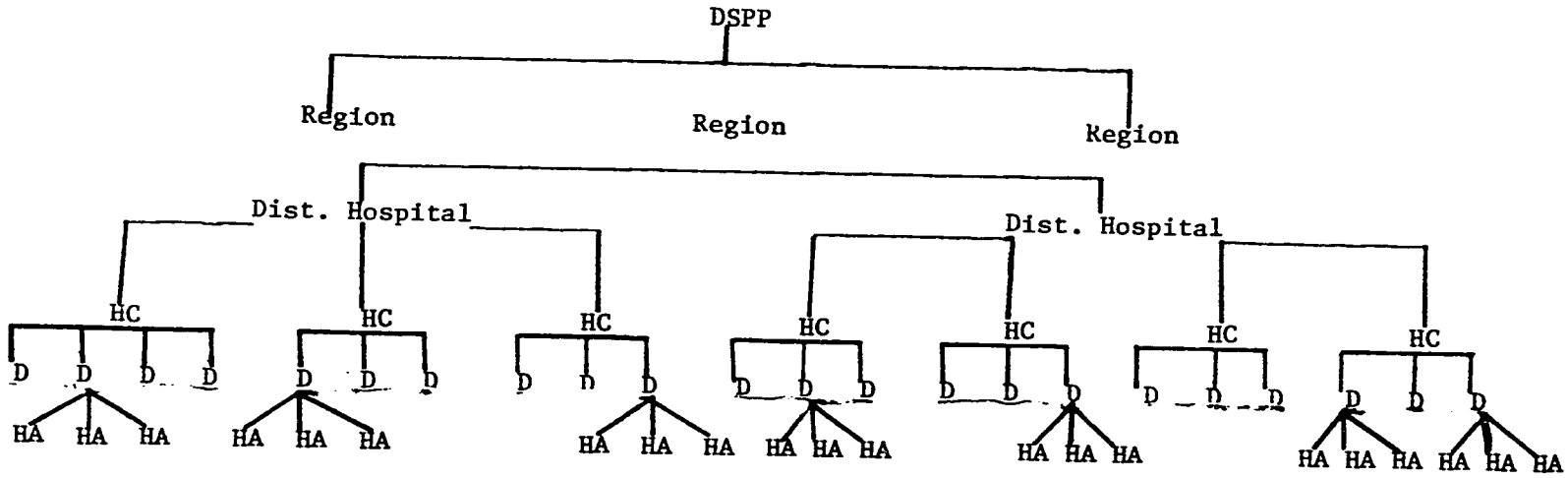

Legend

HA : health agent lowest level polyvalent health worker

D : dispensary supervises HA and is staffed by auxiliaires

HC : health center provides medical supervision of D and HA and referral medical care

Dist. Hospital: district hospital provides general In-hospital care, as well as OB/GYN and Pediatric services

Region: decentralized helath services region responsible for planning, designing and implementing necessary health activities to realize GOH/DSPP sectoral goals and health plans.

3 rural MCH/FP field training sites in Arniquet in the South, in Quartier-Morin in the North and at Estère to serve Port-au-Prince schools. These three field training centers will be equipped to supervise groups of students on rotation for applied practical training throughout the year. Beginning in 1982, two regional workshops will be held annually for nurses and auxiliaries working in Health Centers and dispensaries to upgrade their family planning skills. Once each year an orientation for new medical residents will be held prior to their rural service. These training programs will draw upon nurses and doctors trained in prior years to serve as resource persons and local trainers as necessary.

Equally as important to skills training will be the development of teaching aids and information and education materials for the training of health professionals in centers and dispensaries. Some materials and training aids have already been obtained from Development Associates and Johns Hopkins Project in International Education in Gynecology and Obstetrics (PIEGO). The Division of Family Hygiene has a media production unit and an offset press which is able to reproduce the necessary materials. This project envisages a short - term consultant contract to assist in developing media message packages following the 20 themes developed by the DSPP/DHF. Tested I and E materials for semi-literates are still lacking. Guides and manuals for health workers have been already developed and must now be put into use.

Through FP skills improvement we hope to revitalize the IUD insertion program which has declined or remained stationary for the past four years. Trained, motivated doctors and nurses are the key to services improvement in hospitals and health centers. These facilities with trained staff must also act as technical backup to the services provided by dispensary auxiliaries and health agents. Health agents and dispensary auxiliaries will be retrained through the RHDS project working in technical collaboration with the DHF on MCH/FP topics.

Small operational research studies focussing on service delivery and administrative support for service providers is budgeted at $ 35.000 . These research studies will be aimed at evaluating optimum personnel mixes and program outputs.

2) Private Health Facilities

i) Public Service and Mission Groups

While services and facilities vary among regions and districts (as shown in Table 3, P. 16), private facilities supported by foreign religious, and charitable and social development groups are found throughout Haiti. Perhaps a fourth of these facilities are supported by Roman Catholic groups, while half are Protestant and/or evangelical in orientation. Roughly a fourth are non-denominational and a few are supported largely by a local community or expatriates. More than 60% of health care contacts are made through these facilities. For example, the average number of daily dispensary visits in 1979 to private facilities averaged 23 as compared with 9 in DSPP dispensaries. This is probably due to both the quality of the care provided and the availability of drugs. Fees are normally levied but Haitians seem willing to pay for the services. The DSPP is actively attempting to coordinate and collaborate with these private institutions to ensure adequate health service coverage while avoiding service duplication.

This project will attempt to involve the majority of these facilities in the delivery of high quality family planning as well as the MCH services currently provided. Local training and orientation workshops will be organized and information materials developed and made available to interested organizations. Where needed, contraceptives will also be provided to ensure their ready accessibility to the population. The workshops will assist the private groups to establish appropriate controls and service norms as well as facilitate regular reporting on their activities.

ii) Private Medical Practice

Strictly private medical practice as found in the US is constrained by the limited distribution of doctors within Haiti. Nevertheless, the corps of physicians sets the tone of services for the paying public and influences the attitudes and behavior of DSPP health care providers. Recent professional meetings have shown some subtle changes in the orientation and philosophy of Haitian physicians toward their broader responsibilities to improve the health status of the public. The increasing acknowledgement of the need for preventive services by private practitioners in recent months is a departure from their past opposition to preventive health care programs sponsored by the DSPP. In the urban areas or wherever doctors are in private practice, Haitians flock to them for counseling and treatment. More can be done to upgrade their understanding of the role of FP services in the management of disease and maintenance of health. We plan to study the attitudes of private physicians and their delivery of services as a means of understanding the role of the private practice in supporting the national family planning program. The contraceptive prevalence survey planned for 1982 should also help reveal their contribution to contraceptive use. We are equally concerned that population dynamics and reproductive health courses are not yet part of the curriculum of the Faculty of Medicine. We believe, however, that with assistance from the Johns Hopkins PIEGO program and the International Program/Association for Voluntary Sterilization (IP/AVS) that by 1983 initial efforts toward these essential medical curriculum modifications will be underway.

In addition to the Faculty of Medicine, there are three distinct groups within the corps of physicians who can benefit from updated knowledge of contraception, population dynamics and related family health issues. These are the Haitian Medical Association, the Association of Obstetrician/Gynecologists and the Pediatric Association. Each has a special role to play in supporting the national family planning program. National seminars and workshops will provide opportunities for presenting relevant research and program results. Whereas most professional meetings

focus on medical anomalies, the focus here will be on principles of health care maintenance, counseling techniques or quality of care.

iii) Traditional Medicine

Traditional medicine in Haiti as in many countries retains its adherents. In fact, social scientists indicate that Haitians probably seek treatment from traditional healers more often than modern medical practitioners. Simultaneous treatment from both groups is common. In the past, the DSPP has officially ignored this group. Locally, informal cooperation and cordial relationships are often established between traditional and modern practitioners. Because traditional midwives or matrones still assist in the delivery of over 60% of the births annually, the DHF working with the districts has developed a basic curriculum and training manual for the matrones in MCH/FP. Over 5,000 matrones have been trained and given UNICEF delivery kits but this has had only limited impact on improving women's health services. Few of the matrones have been thoroughly recruited into the family planning movement. During the project period, the potential for further involvement of matrones in family planning outreach activities and in training programs will be explored. Development of educational materials and simplified service management checklists for these semi-literate health providers should make a marked improvement in the quality of services provided.

3) The Forces Armées d'Haiti (FADH)

The FADH operates a health service which includes a network of dispensaries for military and paramilitary employees. There are currently 90 such dispensaries scattered throughout the country. FADH is now actively involved in providing family planning counseling and services. It appears that the FADH facilities are limited in scope, their nurses are well paid and, with the means available, do their jobs well. Thus the added task of providing family planning services has easily been included in their health care responsibilities. In addition, the FADH client group tend to be adult, healthier, more active sexually, and better educated than the population at large. Furthermore, there are many areas of Haiti where the FADH facility is the only health care facility in the area. Where this is the case, the communities may also be served by the FADH dispensary on a voluntary basis. The nature of condom, pill and foams use is not susceptible to coercion. Results have

been extraordinary as demonstrated by the rates of persons served through the FADH network being far higher than those in DSPP facilities. This is largely because there is a minimum of red tape associated with the provision of FADH services. Unlike the monthly reports submitted by the DSPP and affiliated private facilities, the simplified records and reports submitted by the FADH dispensaries appear more accurate and timely. The FADH dispensaries draw contraceptive supplies from the district health office or directly from DHF and provide regular reports on amounts distributed.

During the project period, the DHF will strengthen military health services for women. In addition, FADH doctors will be trained in FP techniques including
voluntary surgical contraception, particularly vasectomy. The project will assist with the development of population/family planning orientation minicourses suitable for military staff and officers during their training.

The FADH health services are provided to the local paramilitary group, Volunteers for National Security (VSN) and to the rural section chiefs. (The section chief is the policeman, justice of the peace, arbitrator and lowest level Government official.) In many areas, the section chiefs have begun to informally distribute the contraceptives obtained from the FADH dispensaries. The FADH success in recruiting new acceptors demonstrates the widespread acceptability of family planning and the desire for reliable contraception. In addition, the quiet but rapid expansion of this program since its commencement in 1978 attests to the growing societal support for the program. We believe the FADH program provides a tested model which can be used for expanding FP services through private health services groups.

4) Summary of Inputs and Expected Results

To improve both the quality as well as the quantity of family planning services provided through private and DSPP facilities and health care workers, a variety of different inputs will be required. Priority will be given to expanding the number of institutions actively providing family planning counseling and services. Quality as well as quantity will be sought. Service norms which have been developed by the DHF will be reviewed and revised. As DSPP services management improves this will be reflected in the FP/MCH services available. Opportunities for enhanced FP performance have only been partially explored due to limited DSPP resources. Prenatal delivery and post partum care which are weak throughout the country present an obvious opportunity for family planning counseling and recruitment. Too often family planning counseling opportunities are overlooked. Health workers, nurses and auxiliaries as well as doctors are still not convinced that family planning is necessary or that appropriate FP counseling and/or services are a basic part of their jobs. Seminars and workshops will help but the DSPP must take a stronger position on the basic necessity for every health worker to promote family planning. If the DSPP/DHF can enlist more private facilities during the project, the task of assuring the access of every interested couple to family planning services can be more easily and economically achieved.

Planned inputs and results expected by year are summarized in Table 9. (Voluntary surgical contraception is described separately in the following section).

b. Voluntary Surgical Contraception

While all health facilities are capable of providing general counseling and screening for pills, condoms and foam, only facilities with trained physicians should be involved in the delivery of voluntary sterilization services to men and women.

Table 9

PLANNED AID INPUTS FOR SERVICES IMPROVEMENT BY ACTIVITY[1/]
(NOT INCLUDING VSC ACTIVITIES OR CONTRACEPTIVES)
(In US Dollars)

ACTIVITIES	FY 82	FY 83	FY 84	FY 85	LOP
1. Rural Services Improvement:					
Allowances for TRG Team	$ 4,800	$ 4,800	$ 4,800	$ 4,800	$ 19,200
MCH/FP Medical Kits	5,500	5,500	5,750	5,750	22,500
MCH Drugs & Expendibles	30,000	30,000	30,000	30,000	120,000
2. Support for Action Familiale (Sympto-thermique Method)	$28,500	$30,000	$33,000	$36,000	$127,500
3. Services Supervision & Support:					
a. Matron Program, Supervision	7,200	7,200	7,200	7,200	28.800
b. Per diem Regional level	3,600	3,600	5,400	5,400	18,000
District level	21,600	21,600	21,600	21,600	86,400
National level	7,025	7,025	7,025	7,025	28,100
District Personnel	5,472	5,472	5,472	5,472	21,888
c. Transport:					
i) Vehicle Maintenance	4,400	4,400	-	-	8,800
ii) Spare parts	-	-	484	533	1,017
iii) Gasoline	8,250	8,250	11,000	11,000	38,500
4. Mobile Clinics:					
a. Allowance for Contraceptive Distributors	3,600	3,600	-	-	7,200
b. Transport:					
i) Maintenance	9,000	9,000	-	-	18,000
ii) Spare parts	-	-	1,210	1,331	2,541
iii) Gasoline	13,500	13,500	18,000	18,000	63,000
5. Short-term U.S. Training	20,000	10,000	10,000	5,000	45,000
6. Training In-Country	14,000	14,000	7,500	8,000	43,500
7. Central Staff Salaries	28,494	24,196	16,338	15,023	84,051
8. IEC Share	15,000	4,000	3,000	3,000	25,000
9. Evaluation/OR	7,000	8,000	10,000	10,000	35,000
10. Short-term Consultants	5,000	5,000	10,000	10,000	30,000

1/ See Table 11 for Consolidated Summary of Inputs for Services Improvement.

1) VSC Guidelines

To ensure that adequate quality of services are provided and that all such services are voluntarily following internationally accepted "informed consent" procedures, a set of VSC guidelines has been developed. These guidelines conform to the U.S. legislative conditions for family planning assistance and will facilitate a controlled expansion of the VSC program to respond to the demand for such services in Haiti.

There should be:

a) Documented evidence of fully informed consent by all voluntary sterilization acceptors.

b) Full availability at a common location of other methods of family planning in order to assure complete free choice by acceptors.

c) No rewards or incentives provided to those who accept VSC over other family planning methods.

d) High quality surgical services based on approved training and suitable equipment.

e) Close integration of VSC with other health measures and facilities.

2) Planned Program

USAID has agreed with the DSPP to provide financial support for the development and expansion of voluntary sterilization services in Haiti. This is based on a steadily growing demand for these services in many parts of the country.

Four categories of support are anticipated:

a) Expanded operating room space for services through renovation and addition. (8 centers at $12,000 each)

b) Provision of major and minor equipment needed for surgical services (8 centers at $3,000).

c) Provision of minor equipment and supplies in other centers.

d) Support for DSPP hospital service costs.

e) Support for informational and educational materials and activities designed to describe and explain services.

In 1981, there were 6 government DSPP facilities and 3 private hospital facilities providing VSC services, and another four are being established. Over the life of this project, this infrastructure will be expanded to 30 facilities. These 30 facilities represent over 60 percent of the facilities in Haiti with the necessary beds and infrastructure to handle minilap and vasectomy procedures.

Ten of these 30 facilities will also be equipped to perform VSC using the laprocator. By 1984, training in vasectomy techniques will be provided to surgeons routinely as part of their basic training in fertility management. Creation of a network of 30 VSC centers throughout Haiti will require high initial costs for the program, but will ensure the possibility of responding to what appears to be a growing demand for such services among the public. Certainly a few doctors in private practice appear to be providing extensive VSC services. But, in 1977, the Haitian Fertility Survey indicated that 0.5% of the population of women currently contracepting used VSC to control fertility despite the fact that the government had no VSC program. Increasingly, VSC appears a realistic means of fertility control for those who desire no additional children.

During 1980/81, several doctors were trained in vasectomy techniques and initial reports on cases suggest that vasectomy, while less popular than minilap, will have an increasingly important place among the available methods of family planning. Supervision and control of the quality of VSC services are extremely important for the success of this part of the national program. Four seminars for program administrators and the VSC teams are envisaged to maintain and assure sound program management. Two workshops focusing on the nursing care, sterile technique,equipment maintenance and client screening and counseling are planned.

The VSC program was originally designed in 1978, using salary supplementation to reimburse the surgical team for their extra efforts. Since the supplements were not linked to annual service targets, the surgical staffs have not responded particularly well. Beginning in 1982 reimbursement will be based on a "per session" basis. Funds for medical supplies which are required will similarly be linked to the number of procedures. The costs of the planned program remain higher than we would wish, but in the confirming absence of a strong governmental commitment and priority to VSC services, these outlays appear necessary in order to launch the program. Beginning in 1983, the GOH will begin to contribute to the functioning of this program with Title I funds. We anticipate that when the project ends a system of client payments will assume the bulk of the non-GOH funded operating costs of the program.

3) Inputs and Results Expected

Table 10 below summarizes the planned inputs and results expected during the project for VSC. Table 11 which follows summarizes all the planned AID inputs aimed at improving the quality and quantity of voluntary family planning services to be provided in clinical settings.

Table 10

PLANNED SUPPORT FOR VOLUNTARY SURGICAL CONTRACEPTION
AND EXPECTED OUTPUTS OVER LIFE OF PROJECT

A. PLANNED INPUTS	FY 1981/82	FY 1983	FY 1984	FY 1985	TOTAL LOP
I. AID Direct Contributions					
a. Medical OR Equipment	$20,000	$24,000	$26,000	$26,000	$96,000
b. Medical Kits	4,600	4,000	3,400	2,250	14,250
Subtotal AID Direct Contributions	24,600	28,000	29,400	28,250	110,250
II. Reimbursable Local Expenses					
a. Renovations (New Clinics)	12,000	12,000	12,000	12,000	48,000
b. Expendable Supplies					
i) Linen Sets	7,500	6,000	4,500	2,500	20,500
ii) Medical Supplies	24,000	36,000	48,000	60,000	168,000
c. Surgical Team Reimbursement 1/	31,940	48,060	64,080	66,850	210,930
d. Social Worker Salaries 2/	39,618	32,890	29,601	26,312	128,421
e. Travel Allowances for	6,840	8,400	8,800	9,000	33,040
f. Training Seminars/ Workshops	2,910	7,660	4,570	4,800	19,940
g. Contingency	10,000	13,800	17,400	18,600	59,800
Subtotal Reimbursable Expenses	134,808	164,810	188,951	200,062	688,631
Total AID Contribution	$159,408	$192,810	$218,351	$ 228,312	$798,881
III. Planned Add'l GOH Contribution	-	$ 6,728	$ 13,978	$ 18,617	$ 51,223

Notes: 1/ GOH/DHF Contribution is expected to come from either GOH Title I or Development Budget accounts. Listed amounts do not include in-kind contributions.

2/ Beginning in FY 1983 Social Worker Supervisor salary will be paid from Title I; in FY1984 two additional social workers; and in FY 1985 one.

Table 10 (Continued)

PLANNED SUPPORT FOR VOLUNTARY SURGICAL CONTRACEPTIVE
AND EXPECTED OUTPUTS OVER LIFE OF PROJECT

B. RESULTS EXPECTED (in units)	FY 1981/82	FY 1983	FY 1984	FY 1985	TOTAL LOP
Centers Renovated & Equipped	2	2	2	2	8
VSC Workshops/Seminars	1	2	1	1	5
Total Centers Functioning	17	22	27	30	30
DSPP	(12)	(15)	(18)	(21)	(21)
Other Private	(5)	(7)	(9)	(9)	(9)
VSC Cases	2,400	3,600	4,800	6,000	16,800

Table 11

TOTAL PLANNED AID INPUTS FOR SERVICES IMPROVEMENT OVER LIFE OF PROJECT
(In US Dollars)

	FY 1981/82	FY 1983	FY 1984	FY 1985	LOP TOTAL
I. AID DIRECT PAYMENT					
a. Medical Equipment	$30,100	$ 33,500	$ 35,150	$ 34,000	$ 132,750
b. Spare parts	Ø	Ø	1,694	1,864	3,558
c. Participant Training	20,000	10,000	10,000	5,000	45,000
d. Consultants	5,000	5,000	10,000	10,000	30,000
e. Drugs	30,000	30,000	30,000	30,000	120,000
f. IEC share	15,000	4,000	3,000	3,000	25,000
Sub-Total	$100,100	$ 82,500	$ 89,844	$ 83,864	$ 356,308
II. REIMBURSABLE LOCAL EXPENSES					
a. Salaries	$ 68,112	$ 57,086	$ 45,939	$ 41,335	$ 212,472
b. Per diem	44,897	44,897	46,697	46,697	183,188
c. Transport	35,150	35,150	29,000	29,000	128,300
d. Training In-Country	16,910	21,660	12,070	12,800	63,440
e. Allowances & Bonuses	47,180	64,860	77,680	80,650	270,370
f. Special Grants	28,500	30,000	33,000	36,000	127,500
g. Renovations	12,000	12,000	12,000	12,000	48,000
h. VSC Contingency	10,000	13,800	17,400	18,600	59,800
i. Expendable Supplies	31,500	42,000	52,500	62,500	188,500
j. Evaluation/ OR	7,000	8,000	10,000	10,000	35,000
Sub-total	$301,249	$329,453	$336,286	$349,582	$1,316,570
III. CONTRACEPTIVES					
A. Condoms					
a. DSPP+ Private	$ 50,000	$ 55,000	$ 58,000	$ 60,000	$ 223,000
b. FADH	437,500	522,500	551,000	570,000	2,081,000
B. Pills					
a. DSPP+ Private	13,650	17,850	23,100	32,400	87,000
b. FADH	23,100	25,200	28,600	31,200	108,100
C. Copper IUD's	5,000	7,500	11,000	17,000	40,500
Sub-Total	$529,250	$628,050	$671,700	$710,600	$2,539,600
Grand Total	$930,599	$1,040,003	$1,097,830	$1,144,046	$4,212,478

3. Expansion of Community and Private Support for Family Planning

a. The Potential for Additional Community Involvement

A more effective national family planning program requires the coordination and marshalling of private as well as public resources. The potential for additional community involvement in the Haiti program is substantial. There are at least 130 foreign organizations and a number of small indigenous groups which support a variety of social and economic development activities throughout Haiti. Many groups now providing health services are already in liaison with the DSPP and DHF. In addition USAID/Haiti has informal and formal working relationships with many of these groups including Church World Services (CWS), CARE, Seventh Day Adventist/World Services (SAWS) and Catholic Relief Services who are collaborating Title II food sponsors. Also, the Ministries of Education, Agriculture and Social Welfare have service programs on which family planning information and services are being piggybacked. To help coordinate the activities of foreign and private groups, the Christian Medical Commission of Haiti (CMCH), formed in the late 1970's, maintains a directory of foreign supported health and social service facilities. Because of the multiplicity of organizations and their far flung services, the DHF through its Community Development and Information and Education Sections will work with organizations at both the national and local level.

Non-DSPP service networks which will be mobilized through project activities include the following:

Service Potential	Sponsor/Affiliated Ministry
145 Adult Education Centers	ONAAC
2000-3000 Community Action Councils	ONAAC/HACHO/others
50 Family Life Education Centers	Ministry of Agriculture
66-90 Pre School Centers	Ministry of Education/CARE
150 Evangelical Churches	Council of Evangelical Churches CWS
200 Adventist Churches	SAWS
500 Coffee Cooperatives	Ministry of Agriculture
50 Assembly plants/factories	Ministry of Social Services Industry
15 Womens Centers	CHREPROF
500 Credit/marketing/production/coops	Ministry Agriculture/Private donors

In addition to the network indicated above, there are many handicraft coops, marketing cooperatives and other peasant groups wholly or partially supported by private business, churches, government or foreign private voluntary agencies. The challenge to the program is to find appropriate means of working with these groups to expand access to FP services. By using the stronger of these institutions, the DHF hopes to double its community outreach capacity and achieve over the next five years twice the number of family planning acceptors than would otherwise

be the case. The utilization of these existing service networks to promote FP/MCH is, thus, an important element of the overall project strategy to provide the majority of Haitians with easy access to quality family planning services.

To support this community outreach strategy in the urban as well as rural areas, the DHF will launch a broad scale information and education program utilizing primarily radio but also the press and television. Through the use of short term technical consultants and a local contract for production of training and informational materials in creole the basic tools for community outreach will be designed and tested. (Since the training materials will support services improvement, improved management, population policy development and the commercial retail sales, the local contract is shown as an allocated expense in each of the summary subpurpose budgets.)

Through seminars and workshops utilizing the adapted informational materials and training tools the DHF will systematically contact and motivate the agencies and organizations which can provide alternative access to family planning. As groups are enlisted, leaders will be shown how their group can participate in delivering non-clinical family planning services.

b. Outreach Activities

1) Urban Outreach Activities

Urban institutions are found in the smaller cities and towns, as well as the Metropolitan Port-au-Prince areas. To extend the reach of the fixed clinics in the towns, a cadre of 120 community agents are in place to educate and motivate people to use the MCH/FP services and to take preventive health measures. This program is an important complement to the available clinical services. In Port-au-Prince, Cap-Haitien and Cayes, mobile clinics have been organized to bring MCH/FP services to the poorer sections of town. The urban concentration of factories and assembly plants offers an opportunity to work with the health services in the plants and factories. Eleven factories have established contraceptive distribution programs for interested employees. Beginning in 1982 plant owners or managers will be routinely contacted and invited to participate in the program. By 1985, it is anticipated that 90% of all companies employing more than 30 workers will be participating in the factory family planning program.

Youth organizations have shown interest in family planning and seminars on responsible parenthood have been well received and will continue. In terms of coverage, the 16 Haitian newspapers and television have a limited but important role to play in assisting the government bureaucrats, business leaders and educated elites to understand the FP program and the progress that is being made. An active press program is underway and will be continued and strengthened as possible.

2) Rural Outreach Activities

Our goal in this project is to directly reach 1,000 Community Action Councils or one-fourth of the total numbers of Councils by the end of the project. Additional coverage in rural areas is planned by using the service networks of other agencies and groups who will collaborate with the national program. These activities are described in the sections which follow. Rural outreach activities build on the base of experience and contacts established during the past three years. The project and the community outreach element will be evaluated in 1983. Subsequently we envisage a consolidation of effort in some areas particularly where the community program is well integrated into the fully staffed rural health services system.

c) Community Mini-Projects

The community mini-project is an integral part of the ruraL outreach strategy to mobilize the private voluntary sector in support of the national family planning program. The purpose of the community mini-projects is to stimulate local initiative; to respond where existing program arrangements are weak; and to involve the local communities in formulating and implementing their own population/family planning activities. Use of these non-DHF organizational resources will expand access to family planning services. The mini-projects will be low cost prototype outreach models and it is anticipated that those activities which prove to be the most effective will continue to be supported by the Haitian population.

To ensure coordination and active collaboration with the national program, an ad hoc action committee on family planning outreach (ACFPO) will be organized to develop program guidelines; set policies; review progress; and serve as a conduit for technical and program information. The ad hoc ACFPO will be composed of representatives from the DSPP/DHF, the Voluntary Agencies (VolAgs) and USAID/Haiti as well as such other persons as may be appropriate from time to time. Basic criteria and mini-project guidelines which will be used to select among proposals are the following:

-- projects would be designed for educating, motivating and/or establishing a local program of MCH/FP;

-- they would use local personnel and be planned and implemented by local people;

-- they would be of short or long duration but not more than two years;

-- they would offer advantages or preferences to family planning acceptors and continuing users;

-- the proposals would identify the potential users group and the local administration with which there would be coordination;

-- the mini-project would be linked to the long-term social or economic advantage of the community;

-- the proposals would indicate the resources which would be required and the time frame for implementation;

-- the maximum initial funding would be limited to $10,000, although a second phase might be considered after initial progress was demonstrated.

Development of an implementation plan for these mini-projects will be completed in 1982 following a series of 3 regional seminar/workshops with the voluntary groups.1/ These groups will work with their local affiliates to identify program opportunities and then to prepare mini-project plans and budgets. Once a proposal responsive to the criteria is developed it will be submitted to the ad hoc Committee on FP Outreach for review and approval. A standard sub-contract agreement, acceptable to A.I.D., will be developed and the DHF will administer the mini-project grants. When a proposal is approved, the DHF will execute the sub-contract. The VolAg will assume responsibility for monitoring and general oversight to assure the grant is being implemented as planned. Resources will be provided as rapidly as possible to the local group to accomplish its tasks. In addition to funds for the implementation of the proposed mini-project, contraceptives, educational materials, video presentations and advice and counselling would be made available to the community group from either the VolAg or the DHF and USAID. The USAID will actively assist the DSPP/DHF in monitoring and overseeing the implementation of both seminars and mini-projects. Short-term technical assistance (3 person months) is planned to assist in the preparation of informational materials for leaders and development of the seminar/workshop curricula. For the mini-projects we have budgeted $30,000 in 1983 and $45,000 in 1984 and 1985. Our preliminary assessment of the potential for mini-grants suggests that demand far exceeds available funds.

Acting through the ad hoc ACFPO, USAID and the DHF will work with the various voluntary agencies to begin to clarify their interest, outreach capability and organizational resources. USAID will execute a short-term technical assistance contract to: a) prepare and test I & E materials and local leadership kits for use by these non-governmental groups; b) plan and implement three regional seminar workshops involving these non-governmental groups; and c) provide recommendations to the ACFPO for the solicitation and monitoring of mini-projects. The three regional seminars will facilitate a dialogue between Port-au-Prince and the local groups aimed at encouraging local community organizations to assume responsibility for MCH/FP program support and, where appropriate, for local MCH/FP services. The outreach model developed and used by the DHF with the Haitian armed forces and the Community Action Councils (CAC) (discussed in the next section) will be adapted for use with these groups.

1/ Prior to obligating funds under the A.I.D. grant in each fiscal year for mini-project activities, an implementation plan, acceptable to A.I.D., will be prepared by ACFPO describing the mini-projects, along with their estimated costs, slated for financing in that fiscal year.

The voluntary agencies represent a pool of skills and resources already committed to Haitian development and active at the local level. Nevertheless they are poorly informed about the Haitian demographic picture and the Haitian Government's program in MCH/FP and, thus, are just now beginning to appreciate the role they can play in support of the national program. Through ACFPO and the planned regional seminars their role and potential contributions to the national program will become clearer. The mini-projects envisaged offer them an opportunity to do more than exhort their local constituencies by assisting them in the design and implementation of activities.

Several different types of mini-projects are foreseen but the initial focus of the mini-project will be informational and educational. The organizational linkage between community group and the intermediary voluntary agency will vary. Examples of such mini-projects follow:

1) Mission Organization: i) Pastors and lay leaders are meeting to set priorities and plan their social action programs for the next year. Local cost funding is required to add one day to the meeting to enable them to explore how they can introduce responsible parenthood discussions to their congregation. The mini-grant would finance extra program costs, materials and guest speakers who would describe the demographic situation and the current FP program options. Total projected cost $1,000. ii) A dozen pastors in nearby areas would like to establish small contraceptive depots in their areas. Funds are requested by the organization to train local persons, who will be responsible for the depots, in the basic FP program, management, distribution guidelines and minimal reporting requirements. The planned depots require shelves and whitewash. Total projected cost $8,000 for 12 depots.

2) Social Action Organization

i) There is a society (association) with a network of 30 adult education centers in the Southwest region. This society wants to organize a three-day regional seminar for center directors to discuss the family planning program and develop an integrated plan for collaboration with the local family planning program. Total cost $1,500.

ii) Another society doing rural community development has heard about the Community Action Council (CAC) programs in a nearby area. They propose to train 20 local volunteers to enumerate the target population and to motivate and to distribute contraceptives following the DHF CAC program guidelines. The society also wishes to set up a community pharmacy which can serve as a depot. For the training, materials, outside speakers, shelves for the pharmacy/depot, total cost: $4,000.

3) U.S. Voluntary Agency

A US Voluntary Agency (VolAg) which is involved in Title II food distribution would like to provide counselling on MCH/FP as well as basic nutrition to Title II recipients. The organization wants to put

together a two-day orientation workshop for its distribution center directors and develop a manual guide in Creole for use with Title II recipients. For manual development, the two-day workshop, field testing of the manual and printing costs, $8,000 is needed.

d) The Community Action Council Program

During the past two years, one of the most exciting parts of the MCH/FP program has been the community program which has attempted various methods of increasing acceptance and coverage. These outreach efforts have concentrated upon collaboration with other Haitian groups and GOH ministries. In consultation with the local district health administrator, staff from the DHF Community Development Section have initiated discussions with community groups in rural areas. During 1980 and 1981, the DHF's Community Development Section worked with coffee centers, intensive agriculture development districts, women's centers (CHREPROF and others) and gaguerres (cock fighting arenas). In Annex C, a summary of the 1980 results from the Community Development program are presented. The program with the Community Action Councils (CAC) was more successful than the other community initiatives. The DHF's salaried promoters worked directly with the CAC and community volunteers. Based on this success, training for personnel from collaborating national groups and organizations will include emphasis on interpersonal communications and skills in teaching and motivating. The development of materials in creole and activities manuals for leaders or leadership kits will prove invaluable aids.

The community action councils were formed by the National Office for Literacy and Community Action (ONAAC). The DHF promotes a phased program which begins with an assessment of community resources and their willingness to participate and leads to meetings with community leaders. Ultimately the councils select community volunteers to be trained to act as MCH/FP motivators and direct service providers. After discussions of a preliminary nature with a series of councils or groups, a seminar for leaders is planned and held. The seminar and discussions center around the program and goals of the national MCH/FP program. Councils are invited to create an ad hoc committee for health and family planning and to identify individuals in the council area who would serve as part-time volunteers in providing MCH and FP information in the community, educating their friends and neighbors about MCH preventive services, such as vaccinations, prenatal care and providing contraceptives to interested adults. The volunteers attend a two-week training session where the basic procedures are described, the contraceptives and services available are discussed and the volunteers are trained in their use and distribution. Following training, the district promoter works with the volunteers to take a census of the area, i.e., to identify households where there are pregnant women, children under five and adults in need of family planning. The promoter provides the volunteers with contraceptives and information about the health services in the area. The promoter is a full time employee of the DHF assigned to a health district. Increasingly the DHF has attempted to involve the district health personnel in the community program. In areas where there are health agents (and their

distribution is still limited), the community volunteer and the community council represent resources which the health agent, whose responsibilities include basic primary health care services and community interaction, can utilize. Where community volunteers are in place and active, the work of the health agent will be easier. Operations research sponsored by Columbia University will explore the questions of how community volunteers can best be utilized whether health agents are present or not.

In the future, there are various ways in which the CAC and VolAg programs can be absorbed and integrated. Community volunteers could take on additional basic health tasks within their village area or begin to cover additional families in nearby hamlets. The best community volunteers may be recruited and trained as health agents. Additionally, as the commercial program expands, the volunteers may be interested in selling the commercially promoted contraceptives on commission as well as continuing the free distribution of the others.

e) Planned A.I.D. Inputs

By mid-project, the additional experience gained in community outreach may suggest other outreach modalities. Operations research and the formal evaluation process will help identify effective activities so that program emphasis can be shifted and modified to enhance program success in reaching rural areas. Table 13 summarizes planned A.I.D. funding for community outreach activities under the project. The project will support the salaries of the DHF community development section and the district promoters. The community volunteers will be given an annual allowance of $75 each for their part-time activities for 2 years. A.I.D. funds will be utilized for monitoring and supervising the ongoing activities as well as initiating new outreach activities. Short-term training in the US will enhance the in-country training by improving communications and community development skills.

Table 13

PLANNED AID INPUTS FOR COMMUNITY OUTREACH ACTIVITIES

	FY 1982	FY 1983	FY 1984	FY 1985	LOP TOTAL
	$	$	$	$	$
I. AID Direct Payments					
A. U.S. Training	$10,000	$10,000	$12,000	$12,000	$44,000
B. Equipment	-	-	484	533	1,017
C. Consultants	30,000	11,000	24,200	13,310	78,510
D. Mini Grants	-	30,000	45,000	45,000	120,000
E. IEC Share	10,000	12,500	15,000	12,500	50,000
Subtotal I	$50,000	$63,500	$96,684	$83,343	$293,527
II. Reimbursable Local Expenses:					
A. Salaries	$76,155	$71,371	$77,193	$75,877	$300,596
B. Allowances/ Fees	(57,200)	(79,700)	(66,850)	(66,850)	(270,600)
Community Volunteers	45,000	67,500	54,000	54,000	220,500
Fees Reg'l Coordinators	6,500	6,500	7,150	7,150	27,300
Fees Cinema Assist.	900	900	900	900	3,600
Field Allow/TRG Team	4,800	4,800	4,800	4,800	19,200
C. Per Diems	(41,952)	(42,960)	(43,968)	(43,968)	(172,848)
Promoters	22,800	22,800	22,800	22,800	91,200
Supervisors	19,152	20,160	21,168	21,168	81,648
D. Training In-country	5,500	11,500	13,200	25,800	56,000
E. Transport	15,150	15,150	13,500	13,500	57,300
F. Renovation I-E	1,450	1,450	-	-	2,900
G. Evaluation/OR	4,000	4,000	8,000	12,000	28,000
Subtotal II	$201,407	$226,131	$222,711	$237,995	$888,244
III. Contraceptives					
Pills	$ 28,350	$ 43,050	$ 60,000	$ 81,840	$213,300
Condoms	168,750	278,438	391,500	506,250	1,344,938
Subtotal Contraceptives	197,100	321,488	451,560	588,090	1,558,238
IV. GRAND TOTAL	$448,507	$611,119	$770,955	$909,428	$2,740,009

4. Commercial Program

a. Rationale

The development and implementation of this subactivity is an important part of the FP outreach which will assist the Haitian Government to create national access to family planning services. As a project activity, it can best be viewed as consisting of three phases: planning, pilot testing and national extension. As we move from phase to phase, the active involvement of AID/W technical expertise and short-term consultant assistance is desired and, we believe, important if we are to avoid the problems and growing pains encountered by other social marketing programs which include contraceptive retail sales (CRS). The primary objective of this CRS activity is to provide an alternative access to contraceptives at reasonable prices. Contraceptive products will include condoms, pills and foam tablets. An ultimate goal, but unlikely to be achieved during this project, is to assist the Government of Haiti to produce adequate contraceptive sales revenues so that overall family planning recurrent program costs are within the means of the Government to sustain. However, during the life of this project, it is anticipated that sales receipts will be adequate to pay for repackaging and product promotion by 1985, the last year of the project.

The CRS program is a logical program component if the project is to achieve national family planning program coverage. CRS activities follow on the heels of successful demonstrations that convenient access to contraceptives at the community level achieve acceptance and use which is otherwise impossible when the program must rely on fixed clinical facilities and the mobility of the health staff. In addition, social marketing of contraceptives permits governmentally supported services to reach the working and lower middle classes who are in need of contraceptive services but find facilities inconvenient and current contraceptive prices beyond their means. Over-the-counter sales or vendor sales offer a certain anonymity which part of the public will welcome. Payment for goods and services is fully consistent with Haitian beliefs and attitudes.

However, since most Haitians have limited cash resources and contraceptive buying represents a new demand on these resources, pricing policies will require careful study and management.

There appear to be no major legal constraints to the importation and sale of contraceptives in Haiti. In fact, since it is possible to purchase most drug items by brand name without prescription, training pharmacists and salespersons to properly screen and counsel contraceptive purchasers should contribute to better and safer selection of a contraceptive and more consistent use.

b. Activities to Date (Lessons Learned)

Since family planning service activities were initiated in Haiti, Haitian planners and various donors have foreseen the ultimate viability of CRS activities as an adjunct to clinical family planning services. The basic pre-conditions for the successful implementation of CRS activities exist and are as follows:

--A broad popular awareness of family planning;
--A demand for contraceptives;
--An increasing Government of Haiti awareness of the negative consequences of continued population growth on national aspirations and development goals;
--An understanding that unless the using public pays part of the cost of contraceptive services, the GOH program is completely dependent on foreign donors; and
--A realization that contraceptive marketing is complex, requires professionally-assisted market research and responds to market factors alien to most services programs.

Much of today's wisdom derives from the IPPF-assisted effort to market condoms through machines. The condom machine was ill-considered technology for developing countries which has now been discarded and discouraged in national CRS programs. There are several critical reasons why machines were technically inappropriate: the machines were fragile and unsuited for developing country use; special packaging of condoms doubled the cost of each condom; machine capacity was limited to 50 condoms; machine servicing and maintenance requirements were high; potential users had almost no prior experience with machine vending; and finally, since the machines could neither make change nor return coins when empty, user frustration was high.

Despite all of these problems faced by the DHF in operating the condom machines, several important lessons have been learned. Contraceptives can be sold, but price is important. The product being sold should appear different from the product being distributed at no cost. Haitian pharmacists and shopkeepers are willing to sell contraceptives. In fact, since December of 1980 in the metropolitan area, almost 100 shops (mostly pharmacies) have begun to sell Neo-Sampoon foam tablets and fifteen pharmacies have purchased condoms for resale. A 20% markup is permitted.

These activities have been largely "hit or miss" initiatives launched without market research, little publicity and untested point of sale information. Without promotion, they are doomed to mediocre sales and high operating costs relative to sales volume.

This subproject activity will put CRS activities on a sound and solid basis which, as they grow and expand, will contribute to national demographic goals.

c. Commercial Program Strategy/Plan

1. Phase I - Market Research and Planning

With the assistance of AID/W, technical assistance from the Futures Group and funds from the Columbia University Household Distribution Project, market research activities are underway. Preliminary discussions with the DHF aimed at an expanded commercial contraceptive marketing activity began in the fall of 1980. In March of 1981, it was decided to begin a comprehensive survey of users and of pharmacies. The Center for Research on Social Human Sciences(CRESHS) was selected to undertake the marketing survey with technical assistance from the Futures Group and from Porter-Novelli, a U.S. private marketing survey firm. Porter-Novelli (P-N) is assisting CRESHS in the design and implementation of the survey. P-N has introduced the concept of focus groups as technique to explore ways of posing questions, discover respondent sensitivities and concerns and identify more clearly critical areas of inquiry and thereby reduce the time required to develop a market survey questionaire.

Contracts have been let and the market survey process is underway. Focus groups were organized in June and the questionaire is being pretested. The field work will begin in August and be completed in September. The preliminary analysis of results is expected in October.

In addition, a sample of pharmacies in Port-au-Prince has been surveyed to determine under what conditions and incentive structure they would be willing to more actively promote the sales of contraceptives. Results from the pharmacy survey are expected in August. Porter-Novelli and Futures Group are expected to use the market survey and pharmacy study to develop a phased marketing and sales plan for GOH and USAID review.

However, financial support from this project will be required to complete the development of this plan. Project funds will be needed in order to determine packaging preferences, brand name selection, prices, appropriate point of sale publicity, user information packets, etc. all of which will be required for the comprehensive marketing plan. This plan is expected by the end of December 1981.

2. Phase II - Pilot Testing

Phase II is scheduled to get underway in January of 1982. With the market plan reviewed, modified as necessary and approved by the GOH and AID, implementation can get underway. Local contracts for publicity, sales promotion and packaging will be let.

A CRS policy board composed of representatives from the private sector, DSPP, DHF, USAID and technical experts will be created during Phase I to oversee activities and review questions of policy. During Phase II various methods of publicity will be developed and tested. Sales will be initiated in Port-au-Prince and other regional centers. Quick and simple operational research studies will determine reach, receptivity and penetration of these applied marketing techniques. In addition, sales will be carefully monitored to measure message impact and their influence on demand creation. Supply and distribution mechanisms will be studied and adapted to those most effective and efficient.

Phase II constitutes an intensive effort over an 18 month period to demonstrate CRS techniques in penetrating a limited market for contraceptives while garnering experience and resolving logistical problems. On-going monitoring systems will be established. In May, 1983, Phase II will be evaluated and appropriate program modifications made to launch Phase III.

3. Phase III National CRS Extension

In Phase III, building on the expertise/experience gained and the national marketing links which have been identified and pilot tested, sales of contraceptives will be extended throughout Haiti. Penetration of rural areas will proceed through both strictly commercial channels and the DSPP Community Pharmacy system which is being established under the RHDS Project. In addition, it is anticipated that selected community council volunteers will become local distributors supported by commissions on their sales.

Although it is still somewhat uncertain, the DSPP's move to centralize generic drug procurement will impact on CRS. When the planned semi-autonomous procurement authority is created to purchase and package drugs for the community pharmacy system and has conquered its logistics problems, it may prove to be the appropriate authority to assume responsibility for CRS activities as well. It bears mentioning that this agency has not yet been created. There are two potential pitfalls to this approach toward institutionalization: in the community pharmacy, demand is assumed and promotional activities are not anticipated; and secondly, the community pharmacy is a limited system linked to health services expansion while the CRS program envisaged herein plans to utilize commercial sales networks and contribute to demand creation.

While it is evident that there are still many unknowns to be addressed as the CRS project unfolds, phasing and built-in monitoring systems will ensure that the necessary program preconditions are met at each step of the way.

4. Planned Inputs

S&T /POP has indicated it has only modest resources available to support the development of CRS activities in Haiti. Nevertheless, as indicated above, we believe AID/W resources will prove invaluable in assisting the Haiti CRS program to avoid the common errors committed in most new programs.

Planned inputs are shown below in Table 14. Phase I additional costs are estimated at $18,500 to finance participant training, DHR Commercial Section salaries, per diem, transport and operational studies. Phase II is estimated to cost $862,209 and Phase III $1,292,824. Funds for Phases II & III may be provided by A.I.D. once research studies are completed and detailed plans are developed and approved. It is anticipated that planning for Phase II will be completed during December of 1981. USAID/Haiti will provide the details on planned Phase II activities in a cable or other transmittal for AID/W review and approval. The project authorization may then be amended to include funds for Phase II. A similar process will be followed with regard to Phase III activities.

Table 14

PLANNED AID SUPPORT FOR ESTABLISHING A CONTRACEPTIVE RETAIL SALES PROGRAM
(In U.S. Dollars)

I. AID Direct	1981	1982	1983	1984	1985	LOP
A. Contract Services						
1. Sales Management		$130,000	$140,000	$75,000	$75,000	$420,000
2. Publicity/Promotion		65,000	50,000	20,000	20,000	155,000
3. Packaging		20,000	38,500	61,500	-	120,000
B. Short-term Consultants		5,000	10,000	7,500	7,500	30,000
C. Office Equipment		-	5,000	-	-	5,000
D. Training U.S./T.C.	$2,500	7,500	10,000	-	-	20,000
E. IEC Share		10,000	10,000	15,000	15,000	50,000
Subtotal	$2,500	237,500	263,500	179,000	117,500	800,000
II. Local Cost Reimbursement						
A. Salaries	$8,000	$27,191	$35,191	$18,665	$7,153	$96,200
B. Per Diems	$1,000	1,500	3,000	3,000	-	8,500
C. Training		7,500	7,500	5,000	-	20,000
D. Transport	$2,000	18,000	24,200	21,500	13,300	79,000
E. Operational Studies	$5,000	5,000	16,500	24,200	26,620	77,320
Subtotal	$16,000	59,191	86,391	72,365	47,073	281,020
III. Contraceptives						
A. Condoms		$37,500	$82,500	$116,000	$150,000	$386,000
B. Pills		69,250	109,200	143,000	187,200	508,650
C. Neo-Sampoon		19,500	44,100	62,263	72,000	197,863
Subtotal		126,250	235,800	321,263	409,200	1,092,513
GRAND TOTAL	$18,500	$422,941	$585,691	$572,628	$573,773	$2,173,533

5. Population Policy

a. Haitian Development and the Development of a Population Policy

The project goal is to reach 25% of the women at risk of pregnancy by the end of this project period. The achievement of this as well as long-term demographic objectives will require full GOH commitment in the form of programs which will emerge from policies created in the near-term (by 1985). In addition, the current and projected demographic situation in Haiti requires that the GOH build a capacity for population planning and integration of demographic factors into all areas of development planning.

AID will assist the GOH in defining development policies which reflect population dynamics and demographic factors. AID efforts will be directed toward (1) creating awareness and understanding of the current and future impact of population growth on Haitian development, national priorities, society and culture, and (2) providing the capability for formulating, implementing and evaluating population policies, including producing information required for realistic and accurate planning. Funding for activities under this subproject are modest (3% of total budget) yet essential to achieve the project purpose. The funding level reflects our assessment of Haitian absorptive capacity and the need for continuous low-key technical assistance during the project period Implementation of certain of the policy oriented activities will be facilitated by financial and technical contributions of such AID/W centrally funded projects as Battelle, Futures Group, Research Triangle Institute, Population Council, as well as UNFPA.

In defining an appropriate national population policy, the Haitian Government will wish to confront the following policy elements:

1) An optimal future population size for Haiti, given current growth,mortality,available human and natural resources and overall national social and economic goals;

2) a goal for annual reductions in the rate of population increase, which will be necessary and desirable in view of existing social and economic development goals;

3) a goal for annual fertility reductions to be achieved by encouraging voluntary birth spacing and reduced family size;

4) goals for reducing levels of morbidity and mortality;

5) goals for internal population distribution and migration; and,

6) goals for reduction in the emigration of skilled Haitians, i.e. the loss of valuable manpower resources.

In the absence of articulated goals supported by appropriate sectoral and inter-sectoral studies, Haitian national policies are often inconsistent and non-implementable. Conflicting Haitian policies supported by funded programs waste scarce national resources. This Family Planning Outreach project is aimed at mobilizing Haitian public and private resources in support of national family planning activities. Family planning is, however, only a means to achieve Haitian national social and economic goals for the welfare of the Haitian people.

Policy-directed activities as described below will contribute to the support for the national program by Haitian leaders. This support is necessary if the project is to succeed. Absolute project success will be attained if at the end of the project the Haitian Government is seriously considering how continuation of family planning activities and achievement of contraceptive targets contribute to Haitian development and willingly commits additional scarce national resources for their attainment. Such actions would indicate that a national population policy existed whether or not it was actually stated. The development in Haiti as in other countries of a population policy is, thus, an on-going process. There are various mechanisms and strategies for stimulating this process. Among them are the following:

1) creating awareness and understanding among mid and high level government officials, as well as private and community agencies of the consequences of current and projected demographic dynamics on the achievement of socio-economic development goals;

2) providing information which describes the determinants of population dynamics and how changes in those determinants will affect population change and, ultimately, social and economic welfare;

3) developing GOH capability to prepare timely and accurate analyses of short and long-term trends in population, resources, education, housing, health, etc., particularly within the Ministry of Planning, the Institute of Statistics, and the planning units of the development ministries;

4) expanding the provision of family planning information and services, especially in rural areas and among the urban poor, through the DSPP network and community and private sector channels;

5) establishing a national committee on population and development to define goals, encourage and stimulate development of appropriate programs, monitor population and development dynamics and recommend policies and programs to the GOH.

There are already various programs and activities where population growth dynamics and economic and social development programs interact. In the population policy development process their relative importance and their potential contribution to national development will be analyzed and assessed. Among these economic and social programs which merit study and analysis in the context of programs which contribute both to national development and to implementation of a national population strategy are the following:

1) the provision of general health care and MCH services, especially in rural areas and among the urban poor;

2) nutrition and agricultural programs to expand food availability and its efficient utilization;

3) expanded economic and educational opportunities in rural areas, including decentralized economic development activities; labor-intensive rural works, improved rural credit, agricultural extension and marketing programs which will strengthen rural infrastructure and diminish the exodus to cities and out of Haiti, and

4) educational and economic activities for women as well as men.

Awareness of population dynamics and basic analytic information on choices and options are basic to the development of a Haitian population policy.

Because population policy cuts across sectors and affects both social and economic development, we believe that a national committee or advisory group on population and development policy is needed. This committee should be composed of influential and knowledgeable persons from the private sector as well as the government who share an awareness of and concern for the negative impact of continued population growth on social and economic development in Haiti. Through the seminars and studies planned, we believe that a Haitian group can be developed and organized to act as a catalyst in stimulating the establishment of an ad hoc national advisory council on population and Haitian development. We believe that low-profile assistance is appropriate under existing conditions and consider development of a national advisory council a project output which would be created during the first two years of the project. Should the political climate for the development of a far-reaching national population policy improve significantly, we would reassess funding levels supporting this component and determine the need for a more substantial assistance in this endeavor.

AID Inputs

i) Awareness

The precursor to the development of an articulated, coherent national population policy is, of course, a firm political commitment to programs which reduce fertility and population growth. AID efforts will stimulate discussion and debate of the current and future impact of population growth on Haitian development. Seminars for high-level government officials and workshops for mid-level planners will introduce population concepts into development planning and promote discussion and understanding of underlying issues. A small allocation of project funds will allow Haitian participation at appropriate international meetings. AID bilateral funding for awareness seminars and workshops is concentrated during the last two years of the project since both Battelle and the Futures Group will support such activities in Haiti over the next two years. National awareness seminars on population dynamics will be stimulated by other groups as well. The World Fertility Survey (WFS) plans to hold a conference to disseminate the findings of the recently published Haitian Fertility Survey. The UNFPA has long-planned to sponsor a national population and development conference in 1982. USAID does not wish to duplicate the efforts of these agencies; however, we will carefully evaluate any requests for assistance in planning population conferences, particularly a second national conference toward the end of the project period. The current DHF public affairs activities, supported by the I and E activities described earlier, appear adequate for increasing general awareness of population policy issues.

ii) Enhancing Analysis of Demographic Information

As in many developing countries, Haiti suffers from a lack of accurate information for planning and policy purposes. AID does not intend to support large-scale data collection since the UNFPA is supporting the 1982 national census. USAID has been requested to provide substantial supplementary assistance for data processing equipment needed for the rapid analysis of the 1982 Census. Although the census itself is not

a priority activity for the AID program, the data it will generate will help establish the baseline for comparative and planning purposes (and AID will seriously consider providing assistance if successful use of census data for completion development planning depends on additional funding). The thrust of AID efforts will be focused on small grants allocated for the analysis of existing data in a form that will be useful for policy makers and program planners. Such analyses may exploit existing data from projects, the WFS, the Census, other smaller surveys, etc, in order to better understand the determinants and consequences of Haitian population dynamics. To compliment awareness activities, small grants to Haitian researchers in 1982 and 1983 will concentrate on the consequences of Haitian population growth on development. Battelle and Futures Group activities will also contribute to this understanding. Policy studies which will analyze the determinants of population change will assist policymakers to set priorities for action programs. Both macro- and micro-level studies are planned for 1983-85 as a follow-on to the awareness activities. A small portion of the research grants will be used for evaluation studies to suggest policy and program modifications. At mid-project, in 1984, one such study will be initiated to evaluate government and international responses to population problems. Subsequent studies in 1985 and 1986 will focus on strategies for continued population policy development.

Research grants will be relatively small ($5-15,000) and made to Haitian social scientists and policy researchers. It is anticipated that these small grants will encourage skilled technicians and researchers to remain in Haiti, serving the needs of the country. Criteria for the grants will include: clear statement of hypothesis and methodology; exploration of existing data; clarification of consequences of demographic dynamics or definition of specific determinants of population dynamics with clear implications for policy; relationship of study to GOH development goals; target audience for study findings and plans for their dissemination. A selection committee composed of representatives

from the DHF, MOP, University and USAID will be organized by the USAID Population Office semi-annually. This selection committee will rank proposals as to relevance, completeness and potential contribution to development of a national population policy. Following selection USAID will execute a contract with the researchers acting, in effect, as the contracting agent for the GOH. The demands for research grants is expected to exceed the funds available and competition will be encouraged.

iii) Strengthening Population Planning Capability

In order for the Haitian Government to formulate and implement a comprehensive population policy which will fully integrate population parameters into national development planning, trained staff will be needed. With UNFPA technical and financial assistance, a Demographic Analysis Unit in the Institute of Statistics has begun analyses of WFS data and population trends. Within planning units of sectoral ministries and in the various planning divisions of the Ministry of Plan (MOP) there is no regular analysis of population data as it affects sector development due to lack of manpower. Likewise there is no national or private applied social science research institution of adequate quality to undertake independent problem-oriented research for government planners. Since there are no doctoral level population or development studies programs in the national university, nor is such a program contemplated in the near future, there is an absence of experienced social scientists and development economists to undertake the population policy studies required. In order for Haiti to succeed in articulating a population policy and integrating it into its development planning efforts, a cadre with various applied skills must be developed.

AID proposes to support one Haitian Ph.D. candidate in a graduate school which emphasizes a population planning curriculum, e.g. University of Michigan. If additional scholarships can be obtained from UNFPA, the Population Council or others to supplement AID's planned scholarships, more students can participate. In addition, AID will provide financial assistance to one student per year from 1982-1985 for one year of graduate study in population sciences at, for example, IFORD, Louvain, or

Montreal where no effort will be lost in language training. AID will actively recruit high quality Haitian students and they will be expected to return to work within planning units of development ministries or within the Ministry of Planning. Upon their return, these scholars will be encouraged to design and carry out the studies described in (c) above.

In addition, AID will offer modest assistance for the creation of a Population Information Center, at one of the departments of the University, e.g. Faculté des Sciences du Développement or Faculté de Droit et des Sciences Economiques. Assistance will be provided principally for books and journals; should the Futures Group provide Haiti with a second Apple mini-computer, it would be located within the Population Information Center.

Funds are budgeted for consultation in year two which will assist the University to develop a multi-disciplinary population studies curriculum. As the University departments are now organized, the faculties of economics, development sciences, sociology, medicine and statistics will each be involved in at least one population-related course, structured to respond to the needs of that faculty and their students. Courses can be taught by returning AID or UNFPA fellowship recipients.

iv) Technical Assistance

A technical assistance budget is provided for in the policy sub-project to respond to specific USAID and GOH needs as they arise during the project's implementation. Approximately half of the budget will be used at the discretion of AID when centrally-funded contractors, such as Battelle or Research Triangle Institute, cannot respond to specific needs. The remainder of this budget item will be for one (6 month) technical assistantship to develop and test the population curriculum, oversee the establishment and/or maintenance of the Population Information Center, assist in the design and completion of certain of the small research projects, participate in population seminars and workshops, assist AID in evaluating certain initiatives, and provide assistance, where requested, to GOH planning units.

Table 15 presents planned AID population policy development inputs.

Table 15

PLANNED AID INPUTS FOR POPULATION POLICY DEVELOPMENT

I. AID Direct Contritution	FY 1982	FY 1983	FY 1984	FY 1985	LOP TOTAL
A. Equipment	$ 4,250	$ 6,875	$ 5,143	$ 5,657	$ 21,925
B. U.S. Participant Training	32,000	32,000	32,000	16,000	112,000
1 PHD Program	(16,000)	(16,000)	(8,000)	-	(40,000)
4 Masters level TRG	(16,000)	(16,000)	(24,000)	(16,000)	(72,000)
TRG/Observation	2,000	2,000	2,000	2,000	8,000
C. Policy Research Contracts	10,000	20,000	30,000	20,000	80,000
D. Short-term Consultants	5,000	10,000	65,000	15,000	95,000
E. Allocated IEC Share	4,000	5,000	3,500	2,500	15,000
Total AID Direct Contribution	$57,250	$75,875	$137,643	$61,157	$331,925
II. Reimbursable Local Expenses					
A. Seminars In-Country	-	-	15,000	15,000	30,000
B. Evaluation/OR Activities	-	10,000	-	20,000	30,000
Total GOH/DHF Reimbursement	-	10,000	15,000	35,000	60,000
TOTAL PLANNED AID INPUTS	$57,250	$85,875	$152,643	$96,157	$391,925

C. Beneficiaries

The primary beneficiaries of this project will be the mothers and children of Haiti. The project aims to increase effective access to family planning services by adult Haitians who wish to plan the timing and number of their children. An estimated seventy percent of Haitians live below internationally recognized poverty levels. Double digit inflation aggravated by a declining productivity of the land and various natural disasters jeopardizes even marginal satisfaction of basic needs. Rural mothers are increasingly forced to leave their children with relatives to temporarily enter the labor force as "marchands" (market women) in order to earn enough for the barest necessities for themselves and their children.

Indirect beneficiaries will include the many community leaders and volunteers who by exposure to planning concepts and communications through training seminars and actual programs will develop skills and attitudes which will facilitate the community's development. Indirectly the general health services and the professionals who staff them will benefit from the enhancement of FP service skills and the improved management techniques which will be applied.

Women are de facto heads of household more often than not. This is understandable when the actual sex ratios of active adults are considered. The 1980 estimate of number of men 20-50 years of age and women 15-45 years old by residence is shown below:

Residence	Population in 000's		
	Women (15-45)	Men (20-50)	M/W Ratios
Urban	351.7	232.5	.66
Metropolitan P-au-P	234.4	154.5	.66
Other Urban	117.3	78.0	.665
Rural	788.1	595.8	.756
Total Haiti	1,139.8	828.3	.727

Source: Haitian Institute of Statistics 1980, (their estimate of total 1980 Haitian population is 5,000,000)

The preponderance of women over men in their active reproductive years is explained by demographers as the result of substantial emigration from Haiti by young men beginning in their late teens. This imbalance contributes to the instability of conjugal unions. The fragile economic status of a household can be shattered by too many pregnancies. Effective family planning services offer Haitian men and w o m e n, the means to have children when they can afford them and thereby strengthen a family's financial status.

D. Anticipated End of Project Status

By the end of project the annual number of women practicing contraception to avoid pregnancy will be almost three times that experienced in 1980 (from 60,000 to 165,000). This level of contraceptors will provide the launching pad for achieving a two child family norm by the year 2000. All government/DSPP and FADH health facilities and 75% of private facilities will actively counsel and provide appropriate family planning services to interested persons. Voluntary family planning services and methods for both spacing and limitation of family size will be available in every health district.

A management information system will be in place to more effectively guide the program and provide timely information on results and activities for both program directors and the various service providers.

Models for integrated community services which include health and family planning will be in place to serve 60% of the rural population. Sixty percent of the 565 rural sections will have direct and easy access to non-clinical contraceptives.

Private groups and community organizations will actively support and promote family planning as well as MCH activities.

Non-clinical contraceptives will be available at reasonable subsidized prices throughout the country from trained distributors and pharmacies.

Basic sectoral studies and analyses of demographic impact on sectoral progress and national development will be completed and the Government of Haiti will be actively reviewing the outlines of a national population policy.

Tables 15 and 16 provide amplification of the contraceptive distribution planned during the project. Estimated contraceptive protection as expressed in couple years of protection (CYP) is shown by method and project sub-activity in Table 16. The Economic Analysis Section (IV C) discusses the CYP concept more fully. Table 17 provides projected contraceptive distribution and need over the project implementation period. For pills and condoms we have added funds for stock maintenance consistent with our judgement of needs balanced with shipment lags and overall, funding constraints.

Table 16

ESTIMATED COUPLE YEARS OF CONTRACEPTIVE PROTECTION (CYP) GENERATED BY SUB-ACTIVITY AND METHOD OVER LIFE OF PROJECT

Sub-Activity/Method	Efficiency Ratio	Project Use (000's)	CYP
1. Services:			
Condoms	200 pieces	41,250	206,250
Pills	20 cycles	880	44,000
IUD's	3 years	8.1	7,100
VSCs	1	36	36,000
Sub Total Estimated CYP			293,350
2. Community Outreach:			
Condoms	200 pieces	23,625	118,125
Pills	20 cycles	956	47,700
Sub Total Estimated CYP			165,825
3. CRS:			
Condoms	200 pieces	6,750	33,750
Pills	20 cycles	2,275	113,750
Neo-Sampoon	160 tablets	2,735	17,090
Sub Total Estimated CYP			164,590
Total Estimated CYP			623,765

Table 17

PLANNED CONTRACEPTIVE DISTRIBUTION BY SUB-ACTIVITY AND COMMODITY DURING PROJECT PERIOD 1982-85

	1982		1983		1984		1985		LOP	
	Quantity (000)	Value U.S.$	Quantity (000)	Value U.S.$	Quantity (000)	Value U.S.$	Quantity (000)	Value U.S.$	Quantity (000)	Value U.S.$
I. Pills										
A. Services	65	13,650	85	17,850	105	23,100	135	32,400	390	87,000
B. FADH	110	23,100	120	25,200	130	28,600	130	31,200	490	108,100
C. Community Outreach	135	28,350	205	43,050	273	60,060	341	81,840	956	213,300
D. CRS	325	69,250	520	109,200	650	143,000	780	187,200	2,275	508,650
E. Stock reserve/ orders	0	0	95	20,032	454	100,000	625	150,000	1,174	270,032
TOTAL	635	134,350	1,025	215,332	1,612	354,760	2,011	482,640	5,283	1,187,082
II. Condoms										
A. Services	1,000	50,000	1,000	55,000	1,000	58,000	1,000	60,000	4,000	223,000
B. FADH	8,750	437,500	9,500	522,500	9,500	551,000	9,500	570,000	37,250	2,081,000
C. Community Outreach	3,375	168,750	5,062	278,438	6,750	391,500	8,430	506,250	23,625	1,344,938
D. CRS	750	37,500	1,500	82,500	2,000	116,000	2,500	150,000	6,750	386,000
E. Stock reserve/ orders	4,236	211,777	2,491	137,000	3,362	195,000	3,054	183,223	13,143	727,000
TOTAL	18,111	905,527	19,553	1,075,438	22,612	1,311,500	24,484	1,469,473	84,760	4,761,938
II. Neo-Sampoon(CRS)	300	19,500	630	44,100	845	62,263	960	72,000	2,735	197,863
IV. Copper IUDs(SVCS)		5,000	1.5	7,500	2.2	11,000	3.4	17,000	8.1	40,500
TOTAL VALUE of Contraceptives distributed		1,064,377		1,342,370		1,739,523		2,041,113		6,187,383

IV. PROJECT ANALYSES

A. TECHNICAL ANALYSIS

1. Demographic Impact

Although there is no population policy as such, the Haitian Government has the goal of achieving stable population growth by the year 2000 or before. The activities to be implemented in this project are aimed at increasing access to services and, thus, increased acceptance and continuous use of family planning. If the project is successful, the rate of natural increase will be reduced by at least 25%. In order to maximize project impact, 4 target groups within the adult population have been identified: 1) sexually active adult men; 2) young adults not yet in union; 3) women in unstable unions and 4) women in stable unions. The contraceptive information and service needs of these groups are somewhat different and must be addressed by the family planning program if it is to be comprehensive in scope and provide access to those seeking services. The outreach modalities which will be utilized in this project address the needs of these adults for convenient access to family planning services.

The Haitian Fertility Survey identified 41% of women between 15 and 49 years of age at the time of the survey actually in union. Since the velocity of union formation is unknown, we must assume that during a year the number of women having been exposed to pregnancy during that year will be greater than the point prevalence observed in the 1977 HFS. Even though fertility in stable unions is far higher than in the unstable, it is necessary that sexually active women in these less stable unions should have access to FP counseling and services. Both men and women in unstable unions are unlikely to accept permanent or long-term contraceptive methods and are consequently more interested in methods used only during sexual contact (condoms, foams and foaming tablets). This differential sexual contact within Haitian society and method preferences contrast with that observed in other countries where practically universal and stable marital relationships are established by women before age 25.

As the social analysis section will explore and define further, cultural attitudes and behaviors have apparently had a net negative effect on fertility. As these traditions yield to modern, more permissive sexual practices, the potential for increases in age specific fertility among younger women without access to temporary contraception could actually push growth rates up faster than anticipated and certainly slow projected fertility declines.

In short, because of the social dynamics within Haiti, the mortality declines and lessening opportunity for emigration, the national family planning program will have to reach more men and women than those projected from a simple analysis of union status in order to accomplish significant reductions in fertility.

In order to reduce births expected in 1985 by 25% or roughly 44,000, we estimate that four times that number of women or their partners must be actively using contraception in 1985.

Admittedly the age specific fertility rates observed in the 1975-76 multiround demographic surveys and the 1977 Haitian Fertility Survey are five years out of date. The national census and a contraceptive prevalence survey (CPS) planned for 1982 will provide an updated yardstick upon which specific demographic targets for this project can be articulated.

We are carefully optimistic that our user targets and thus our goals for fertility reduction can be attained by the project completion date in 1985.

2. Contraceptive Technologies

This project will rely on pills, IUDs, condoms, foams, and surgical sterilization. Counseling and information on other traditional methods (coitus interruptus, sympto-thermic observation) will also be available. This cafeteria of family planning methods responds to the range of interests and desires for spacing and family-size limitation among Haitians. The modern contraceptive methods are no longer experimental and their effectiveness under a variety of field conditions is proven. Since method failures (i.e. pregnancy) result more from human error than from technical shortcomings of the contraceptive methods, appropriate education and counseling of family planning clients are necessary to ensure correct usage. Training and seminars for service providers in this project will help ensure the proper instruction of users. Training materials adapted to Haiti and the Creole used by all Haitians will draw on available and tested manuals for correct contraceptive use.

When proper screening and patient management techniques are undertaken (particularly when compared to the health risks of pregnancy in Haiti), side effects from contraceptive use are manageable. The relative safety of the various methods depends, in part, on the particular characteristics of the users with respect to age, health, parity, personality etc. After careful instruction, the user must consider the safety of his/her method relative to the desired level of assurance not to become pregnant. When the variety of modern methods are offered, as in this project, the user can make a reasonable choice. Trained health personnel will also be available to manage side effects once a method is chosen. Often the problem requires only counseling but, if not, an alternative method can be selected.

Continued use will depend on informed selection of a method as well as attentive counseling efforts. Special attention will be paid throughout this project to training appropriate personnel in both these areas. In addition, regular supervision during this project will help to ensure

that personnel are giving adequate attention to appropriate method selection and counseling.

3. Adequacy of Delivery Technique

a. Community-based Programs

Reaching the predominantly rural Haitian population in a reasonably rapid and cost-effective manner will require a community-based outreach methodology. To date, the efforts of the DHF to deliver community-based services have been successful on a limited scale in seven districts and in the experimental household distribution project. The present challenge is not only to fine tune this approach through continuous operations research but more importantly to expand the proven technique nationwide.

Through this project and AID's RHDS project, community volunteers and health agents will be trained to deliver preventive health care and FP. These health agents will be supervised and supported by nurses, auxiliaries and physicians, when necessary, in carrying out, not only the FP, but also other elements of their primary health care tasks. Technically, the triage system of sorting clients will help to ensure quality of care and to maximize use of health agents in dealing with routine services which are inherent to FP and primary health care programs. Such support protocols are standard operating procedure for community-based programs and present no major technical barrier and, in fact, help ensure that service quality as well as quantity standards are met.

While primary health care and community-based programs vary from place to place, several characteristics have been found to be technically necessary to successful programs. Therefore, special efforts will be made to ensure: efficient systems of supply and resupply; utilization of appropriate information for method selection and good counseling techniques; continuous supervision and evaluation; continued staff motivation, and an affordable pricing system.

b. Sterilization

The project will seek to make the most modern and technically sound techniques of voluntary sterilization more widely available to meet the existing backlog of requests for such services and the increased demand expected to be generated by the project. The World Fertility Survey indicates that already a significant number of Haitian women in union wish to terminate their fertility. Making modern methods of sterilization (i.e. laparoscopy, mini-laparotomy and vasectomy) more readily available will help couples to achieve their desired family size. These are more appropriate methods for controlling fertility than pills during the later stages of reproductive life. Although vasectomies are not yet widely available, men in several areas of the country have indicated their interest in vasectomy. Since this male procedure is medically simpler than female methods, training of surgeons in vasectomy techniques will be a part of this project. As the more modern methods of sterilization are introduced throughout Haiti, the knowledge of the availability of such services will spread by word-of-mouth and increased demand is expected.

Successful training of doctors, nurses and support teams in modern sterilization techniques has proven to be feasible. Short-term training combined with supervised clinical practice sessions have produced physicians more than adequately capable of performing this low-risk surgery. The tremendous number of sterilization procedures safely performed each year in LDC's is testimony to the technical feasibility of introducing these modern surgical techniques into Haiti.

4. Promotional Information, Education & Communication (I.E.C.) Methodologies

The channels through which FP education and information will be disseminated is also important in this project. Ideally, it is desirable to introduce basic instruction in population dynamics and reproduction into primary and secondary school curriculums. But, even if begun today, results would be at least a decade away. Thus, because of the serious and immediate problem of accelerating population growth, this project will focus on non-formal education for adults and adolescents.

Fortunately, applied technologies in mass media communication have been developed and demonstrated to be effective in population, health, nutrition and related social development fields. Basic FP themes have been effectively conveyed to the general population through mass media in many countries. Three key themes are that human beings have the means of controlling their fertility; FP services are available in the local community; and, FP improves the prospects for a better life and improved health. The DHF has developed 20 key messages in family planning and maternal and child health care which are being aired on radio. The media are also being used to inform and educate politicians, economists, and community leaders in regard to demographic, political, and economic arguments favoring the provision of FP services and controlled population growth.

Mass media efforts will be reinforced and broadened by point-of-service information, motivation, counseling and education. In hospitals, clinics and pharmacies trained, motivated personnel using IE and C materials and techniques can effectively relay FP messages. Pharmacists, with the support of modern marketing techniques, will enhance information levels and improve contraceptives sales. Moreover, person-to-person communication, especially by informed and satisfied users, will serve as an inexpensive and effective information network.

To conclude, the I.E.C. techniques described above are not only technically sound, but have been proven in the Haitian context. This project will assist the GOH to develop and expand its use of technically proven I. E .C. methodologies in the MCH/FP program.

5. Commercial Retail Sales (CRS)

Although social marketing using CRS methodologies has been successfully implemented in a wide variety of settings, Haitian institutions currently have limited experience in these endeavors. Initial feasibility work has, however, suggested that many of the necessary ingredients are

available in Haiti. For example, product promotion through advertising and far-reaching market distribution systems are present. Nevertheless, social marketing is a departure from current experience in Haiti and a working relationship between Government and business to achieve socially valid, contraceptive marketing goals will require a flexible attitude and behavior on the part of Government and the private sector distributors. Outside assistance will be necessary to develop a technically sound project. Small scale experimental CRS-type projects have shown that both the user population and the potential providers (pharmacists, store owners, etc) are properly predisposed to collaborate. Nevertheless, careful project planning is anticipated to ensure the success of CRS which is still considered to be somewhat experimental in its application to Haiti.

B. SOCIAL SOUNDNESS ANALYSIS

1. The Rural Socio-Cultural Setting

Haiti is a rural, mountainous agricultural country and its people often live in isolated areas. Eighty percent of the population live in villages and hamlets of less than 5000 persons.

About half of the country's population live beyond easy access to the paved highways. The Haitian family grows its corn, beans and rice on small parcels of land. Depending on the ever precarious rains, vegetables and melons may be grown for home consumption, exchange or for sale in the towns or to itinerant buyers and vendors from the city. Women handle most of the family marketing of produce and may travel away from home for up to several weeks at a time, whereas men are more tied to the land and seldom engage in commerce . Roles of men and women may vary somewhat by region; however, the roles are delimited. Traditional male/female delineated roles tend to overlap when a child is sick or the family is poor and men and women help each other with their tasks.

For at least a generation there has been an imbalance between the sexes -- more women than men in the under-40 age groups due to the migration of younger males. This has contributed to women actively seeking financial independence and to an inherent instability in marital relationships.

People in rural areas are often scattered over the land in small hamlets corresponding most frequently to family groupings. On irrigated agricultural land, seasonal movement on and off the land appears frequent as workers come searching for temporary employment. When the work season is finished, they usually return to their family holding to plant crops. Since land holdings are tiny and dispersed, a family will frequently sharecrop on nearby land, rent out far away parcels and till some of their land themselves. Travel between land parcels probably consumes 10-20% of the time allocated for tending field crops.

Because of their traditional isolation, rural families tend to be conservative and fatalistic. Voodooism which is a type of animistic ancestor worship fits well within this tradition. Solutions to current problems are sought through consultation with the hoongan or voodoo priest who acts as a conduit for messages from thespirit world. In obvious illness, the houngan or other traditional healers, i.e. leaf doctors or bonesetters, are frequently consulted before attention is sought from a doctor at a health center or dispensary.

In rural areas the social class differences between a doctor or even a paramedical and the rural peasants are more pronounced. Like peasants everywhere, the Haitian has a healthy skepticism of unknown and easy panaceas for his problems. He is forced to live from day to day and his goals are more oriented toward food and short-term survival, rather than long-term projects and schemes.

This Haiti which has existed for years is now undergoing profound social and economic changes. Already land inheritances are so small, further subdividing is sometimes ludicrous. The traditional inheritance law provides that all children inherit equally. Cultivation of land more appropriate for pasture or forests is creating massive losses of topsoil which is a critical natural resource in Haiti. Better health care and vaccinations are leaving additional mouths to compete for the ever smaller food pot. Traditional subsistance agriculture has given way to dependence on the market economy. Cash obtained from produce sales is used to purchase the cheapest staples available to feed the family. Although the growing population pressure on the land and on family resources has become an ever tightening spiral of poverty from which escape appears more and more difficult to effect, there have been some improvements.

Since the mid-seventies government activities in building roads, schools, dispensaries and in establishing service centers in regional centers have accelarated and are creating an awareness of the outside world and the hope of a better life. Young people from rural areas are opting for this vision and are migrating to Port-au-Prince at a rate of over 6% a year in search

of employment. However, often the movement into the towns and Port-au-Prince is only temporary and there is a smaller flow of people back to the rural areas carrying with them altered perceptions of the world and their choices.

In the midst of these social changes, family planning as a concept is both welcome and compatible with the present metamorphosis. This project has basically two thrusts: improving MCH/FP services which people seek, and extending the outreach to people in communities where such services are needed. Most poor adult Haitians are aware of the increasingly precarious economic condition of the family. The Haitian peasant while uneducated and often illiterate is also a pragmatic realist. Family planning methods which he understands and can control, enable him to better respond to his social obligations to his family and children.

3. Influences on Fertility

On balance the social and cultural tradition of Haiti has had a neutral or slightly depressing effect on fertility. Some examples are identified below:

1) Age of first marital union has been quite late with the average age being 22.

2) Men are responsible for contributing to the support of the children they father, even if they no longer live with the mother. Men traditionally are careful to prevent pregnancies when they do not have the means to support a resulting child.

3) Instability of marital unions has tended to reduce the total fertility rate.

4) Families have traditionally arranged the unions of their children and controlled the sexual conduct of their daughters until a consensual union or marriage is arranged, which is to the benefit of the family.

5) Children born out of union diminish a woman's chances of finding a solid, respectable partner.

6) Sexual imbalances and the out-migration of young men have traditionally meant fewer possible stable unions and delayed family formation.

Procreation is necessary for the survival of a society and Haiti provides its own examples of pro-natalism. There is a large family tradition and mystique which, while realized by few, remains a part of the social heritage. Where health services are less available (rural areas), the large family is more the norm and results from more stable marital unions. Children are seen as social insurance for old age. In the traditional religious panopoly of voodooism, it is also necessary to have children to take care of the funerary social ceremonies, associated with parental death.

4. Program Diffusion

To date the seeds of acceptance of family planning have been planted and nurtured in each part of the country. This project with its community outreach, services improvement, encouragement of governmental commitment and commercial retail sales of contraceptives will further multiply FP acceptance as a favorable social climate is created. While spread of family planning depends on the Government and its ability to marshall private and public resources in support of the program, it also depends on the readiness and receptivity of Haitian men and women to become active FP supporters and continuing contraceptive users. In the 1977 WFS, 41% of the women with three or more children wanted no more. With today's inflation and increasing economic hardships on Haitian families and the family planning education campaign over the past four years, we believe there is a far greater readiness to limit fertility among Haitian couples. This apparent demand will be assessed in the contraceptive prevalence survey planned for 1982. Examples of existing unmet demand abound:

--In eighteen months of effort with limited DHF staff, 387 community volunteers were trained from 194 community action councils (Population 194,000) to carry out basic MCH/FP information and service tasks; by the end of this period the user response was 40% of the women at risk (9,000) and more than 17,000 condom acceptors out of a total adult male population of approximately 43,000.

--In less than 4 hours in Port-au-Prince, when adivsed of the availability of VSC services, 5 women agreed to the procedure for the next day. (Despite efforts by PIEGO, such counselling services have not been consistently available).

--In discussion groups for the contraceptive marketing study, most poor respondents indicated a willingness to pay up to $2.00 per month for contraceptive supplies. (This willingness to pay will be tested and further analyzed in the survey).

--In four months 77% (100) of the pharmacies in the Port-au-Prince area agreed to stock and sell neo-sampoon tablets even though there is no publicity yet to promote the product. Even more interesting, 5% of the pharmacies are selling Tahiti condoms although they are also available free at health facilities.

--With less than half of the number of DSPP/private sector service outlets now providing MCH/FP services, the FADH infirmeries distributed 25% of the orals and 80% of the condoms reported by the total program in 1980.

The health services have been unable to fully respond to the growing demand for family planning services. The planned services improvement activities will help remedy this situation. In addition, community outreach activities in each health district during the project period will compliment the services available in health facilities and help respond to this unmet demand. As services expand and improve they are expected to generate new demand and confidence in the services structure. Because family planning is so frequently seen as a response to economic pressures, program acceptance through outreach is expected to grow more rapidly than in the fixed health facilities. (Even so, use of VSC is expected to grow even more rapidly as quality service centers are created and staffed, because this program aspect has not expanded as originally planned in the period 1978-81).

We anticipate that FP acceptors and continuing users will be both young adults who wish to space births and other adults who have already achieved their desired family size. Logically we expect these persons to be from the working poor. Wealthier groups already have access to private health care in urban centers whether they are urban or rural. Those most destitute may be more difficult to reach and serve, since the pressure of daily survival usually pre-empts the planning and foresight necessary for effective contraceptive use. However, as demonstrated in the rapid diffusion of processed foods and modern conveniences, emulation of habits and attitudes of higher class groups is usually the rule rather than the exception. Careful marketing studies and operational research coupled with improved program monitoring should help verify user profiles and changes as they occur.

5. Family Planning Impact on the Haitian Family and Society

Convenient access to contraceptives and family planning information as envisaged in this project may not always have wholly positive effects. Without doubt as both modern influences increase and contraceptives and family planning are openly discussed, teenagers and young adults will become more sexually active. Haiti will be unable to prevent this sexual revolution and its impact on local norms and mores. This project which focuses on responsible parenthood and involves the community itself in family planning may help to reduce ill-timed and un-wanted pregnancies among the young (as well as older groups). Programs must be sensitive to the individual, his family and their needs. From the outset, the DHF has attempted to combine maternal and child health services with family planning. This project plans activities which will improve the quality of services by including appropriate counseling as to contraceptive methods and necessary supportive health services to protect existing children. This is an important consideration for Haitians.

The successful implementation of this project will facilitate social and economic development in Haiti but, more importantly for individuals it may provide immediate means for protecting the health of the family. For

high risk women (i.e. with pre-existing health problems, high parity or relatively advanced age), family planning offers relative freedom from pregnancy and can enable them to live normal lives. For heads of households, family planning and the avoidance of unwanted or ill-timed pregnancies can help stretch family resources and reduce interpersonal stress within the household.

For children already born, their parents' use of family planning may permit them to grow and develop less burdened by the family's poverty. Within the family structure family planning can mean additional resources for schooling and technical training of children or it may prevent malnutrition resulting from too little food divided among too many mouths. For future generations of Haitians' family planning now can mean faster economic development and a brighter outlook.

In summary the potential benefits of family planning for Haiti and Haitians are obvious. Haitians themselves are beginning to recognize the economic as well as personal benefits which family planning brings. The culture and traditions of Haiti appear consistent with responsible parenthood and the use of contraception.

C. INSTITUTIONAL ANALYSIS

1. DHF/DSPP Evolution

The Division of Family Hygiene (DHF) of the Ministry of Public Health and Population will have primary responsibility for implementing this project. Since its creation in 1971 the DHF has demonstrated its ability to plan and implement an increasing array of increasingly complex maternal and child health services (MCH) and family planning (FP) activities. Equally important for an understanding of this project is an awareness of the dynamic development process in which the basic health services of Haiti are presently engaged.

The Ministry of Health and Population (DSPP) was also formally created in 1971 but without the focused mandate which was accorded to the DHF. Nor did the DSPP have access to the range of foreign donor resources which has enabled the DHF to innovate and study. As a consequence the D S P P is still evolving a philosophy and strategy for MCH/FP of service delivery mechanism, the delivery of basic primary health care services. Since the 1950's the Haitian health sector has been characterized by the growth of both public and private facilities and particularly those provided through foreign missionary groups. An additional influence on health sector development has been the emigration of doctors, nurses and technicians from Haiti to more lucrative posts elsewhere. These factors have shaped the organization of present health services. The DHF which was created to channel donor funds into Haiti was able to grow and expand into what is now commonly and erroneously perceived as a vertical organization. Massive donor assistance (more than 90% of the funds used by the DHF) has been used to organize, plan, support and manage MCH/FP programs throughout Haiti. Until 1980 the UNFPA was the largest single donor assisting the Division of Family Hygiene. Assistance to the Department of Public Health in contrast has been limited and fragmented and its mandate broad and diffuse. For actual improvements

in services only modest amounts of funds were available. Budget increases over the years have been barely adequate to pay minimal salaries for newly trained staff. In reviewing assistance to the DSPP, one notes assistance by BID for construction of facilities and seemingly substantial sums provided by AID. The bulk of USAID assistance, until the Rural Health Delivery Systems (RHDS) project was initiated in 1978, was designated for malaria eradication and control activities. Only $1.5 million was allocated for improving health services and this was for health planning, statistics development, health services research and the development of a community medicine program in the medical school.

A fairly large percentage of the national budget is allocated to Health but per capita funding is only about $2 including the value of donor inputs. The bulk of the budgets go for salaries rather than activities (as is true in most developing countries). Given the visibility of curative facilities and services and the clinical orientation of medical personnel, preventive services including FP/MCH have not yet received the Governmental support and commitment necessary to plan, organize and implement these services on the scale warranted by the health status of the population. Because the foreign donors were primarily interested in these preventive activities, the various donor financed public health projects which evolved seemingly never generated a strong Haitian commitment. And, the underlying health service management problems were not addressed.

The situation appears to be changing and there is an evolving interest in improving basic health conditions. Decentralization aided by the BID and PAHO and improved health system management in which the AID RHDS project will play a pivotal role coupled with Haitian concern for basic health services provide a means for improving health service delivery and access to basic health services. However, the changes and system modifications which consistently improve services will require a minimum of one to three years to adapt, to design, and to begin functioning.

While this strengthening of health services occurs, the service outreach modalities included in this project offer the means of accelerating the implementation of MCH/FP services at reasonable costs. Population pressure in Haiti and the popular demand for services are such that the slower program alternative of linking all family planning services to the growth and evolution of DSPP services facilities is inconsistent with the USAID strategy for development assistance to Haiti. Additionally, it is far from clear either that the health services will evolve as planned or that Haitians see family planning exclusively as a health service. On this latter point informal data increasingly suggest that the primary motivation for FP acceptance and use of contraception is based in the economics of the Haitian family rather than in health concerns.

2. The Health Services Model

The Department of Public Health and Population (DSPP) was created to provide an administrative framework for Governmental health services, subsequent legislation in 1975 attempted to clarify and articulate an organizational decentralization of authority and control over peripheral services. Decentralization has not proceeded as planned and only 2 of 6 health regions have actually been organized. The health service model being developed with the assistance of AID and PAHO is a five tiered pyramid. At the base, operating closely with the community and community volunteers is the health agent (agent de santé) who is responsible for the basic health care of a population of roughly 2000 people.

The health agent is a polyvalent health worker engaged primarily in the delivery of preventive health care services and information. The schematic presentation in Table 8 provides a sense of the hierarchical model being developed. The linkage between the health services structure and the DHR's promoter who works with the community action council is shown in Table 17a.

Table 17a

INSTITUTIONAL LINKAGES WITHIN HEALTH DISTRICTS

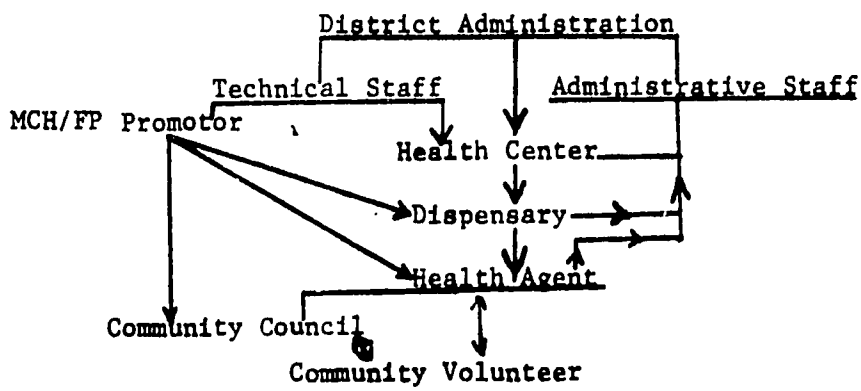

Funds from both UNFPA and USAID (MCH/FP II - 521-0087) provided drugs to dispensaries for MCH/FP activities. We are assuming that with the RHDS support only very limited specialized drugs and supplies will be required for MCH/FP beginning in 1982. Clearly the bulk of procurements anticipated in Project 521-0124 are contraceptives.

While we are hopefully optimistic that the RHDS model or a close variant will prove feasible there are too many uncertainties to predict the timetable which will be required to enable the health system to function well in providing service coverage to 60% of the rural population as was originally envisaged. This project will support and strengthen Haitian efforts to improve health status. The outreach focus of the project is aimed at developing cost effective mechanisms for providing basic MCH/FP services to Haitian communities. In a very real sense it is a complement to the RHDS project which focuses on the services structure.

3. Family Planning and Integration in Haiti

Integration is a term missused and abused by planners and bureaucrats. Integration in public health has evolved from the public health philosophy that solutions to problems must be seen in the context of the totality of health problems of the individual or the community and that single solutions often create more harm than good.

The nature of a family planning services program is that:

--it is not a program for sick people;

--it requires a maximization and utilization of all resources within the society to create the conditions which enable couples to voluntarily choose to limit and space their progeny;

--it requires some specialization, and

--it is or should be a national development priority.

In addition, in the absence of effective FP programs, progress in other development activities is eroded by continued population growth. In Haiti the specific goals and purposes of "integration" within the health sector which are desired must be clarified.

Some program savings can occur as administrative duplication is reduced and DSPP capability strengthened, but the primary impact of the integration being envisaged will transfer de facto financial as well as management responsibility for basic health services to the DSPP and the districts and regions. This is not likely to reduce the total health budget. More importantly, however, this financial "integration" will perform two important functions. It will increase GOH commitment to the programs of its divisions including the national FP program; and, secondly, it should facilitate coordinated planning of all basic health activities.

It appears that implementation of RHDS activities is stimulating intra-ministerial communication and coordination. "Integration" is probably taking place as rapidly as is feasible without diminishing existing services. Indicators include the following:

1) the RHDS dispensary drug procurement includes provision for MCH needs;

2) the DHF has participated in the development of the retraining program for Health Agents which will focus on basic health tasks including MCH/FP;

3) the DHF with the technical assistance of Development Associates has been working to develop a family planning curriculum module for nurses and auxiliary nurse training.

4) the administrator of the DHF was promoted to administrator of the DSPP;

5) the DSPP will include expanded funding for the DHF in its 1982 budget submission;

6) collaboration on revisions of service statistics includes DHF participation.

Nonetheless, it would be extremely premature to bind the DHF program and activities to a supposed or planned timetable for complete administrative "integration".

It bears emphasizing that "integration" notwithstanding the DHF will continue to exercise important functions as a normative, staff division of the DSPP. These are:

1. to set, revise and upgrade the service norms for MCH and FP and assist the regions and districts to implement them through both DSPP and collaborating institutions;
2. to monitor MCH/FP services delivered and analyze service data to identify problems and modifications in the program which may be necessary;
3. to encourage and support operational research studies which will improve program performance, impact on the health of mothers and children and assure access of all Haitians to quality MCH/FP services; and
4. to encourage and facilitate as part of the DSPP the collaboration and participation of the private sector and other governmental outreach programs in improving health status through policies, related programs and, where appropriate, MCH/FP services.

Until such time as the GOH articulates a national population policy and designates an implementing agency the DHF has also the de facto responsibility for creating a national awareness of the importance of population planning and the role of family planning services in serving to facilitate achievement of national development goals as well as responding to the health needs of the population. The project support for policy activities is intended to assist the DHF and the GOH in their efforts in this area.

4. Administrative Capacity

Since 1974 the DHF has organized and managed an increasingly effective and complex program of MCH and family planning services. In addition, the DHF has planned and demonstrated service innovations through applied research which have now become part of the broader health sector service philosophy. The DHF organized the training of the first 300 health agents. Health agents are now the critical manpower base of the rural health service structure. With Canadian and German Government assistance, the Petit-Goâve project demonstrated that fixed health facilities had

limited capacity for reducing infant mortality but that mobile medical teams, vaccination campaigns and direct involvement with communities could effectively alter vital rates at modest costs.

DHF pioneering has shown that when contraceptives are made available at the community and household level contraceptive acceptance and use are more than double that achieved by fixed health facilities.

The DHF has thus demonstrated a capacity for innovation in service delivery. This experience is very relevant and basic to the DHF capacity to implement this project. Over the years the DHF has developed a management style and administrative support systems which have enabled health personnel in outlying districts to provide MCH/FP services, to receive supplies and to, in effect, do their jobs. The DHF has developed, and will maintain until the DSPP can assume full responsibility, systems for allocation (motor pool) and maintenance of vehicles, delivery of MCH medications, supplies and contraceptives to regions and districts, and continuous supervision of MCH/FP activities in district health facilities.

With the management improvements envisaged in this project including the development of improved analysis and use of service statistics and operational data as well as the demonstrated professionalism of DHF staff, the administrative capacity of the DHF to implement this project need not be doubted.

In no small measure the experience and support systems of the DHF will be important resources and models to facilitate the planned improvement in the organization and management of the DSPP and the upgrading of services in rural areas.

Within the DHF coordination and monitoring functions will assume increasing importance as this project is implemented. Increased management and delegation of appropriate responsibilities will be aided by the installation

of a management information system which will link services to program inputs. Management rather than direct services involvement will be enhanced by the reliance of the DHF upon local management contracts for IEC activities and CRS program management. The short-term consultations envisaged during the first year under the management improvement sub-activity will be able to further strengthen the DHF capability to implement this project. We envisage regular reviews of program progress and problems between the DHF, DSPP, UNFPA and USAID. Reviews already held during 1981 have demonstrated their value.

D. ECONOMIC ANALYSIS

The economic feasibility of this project rests on whether or not the planned investment of AID, GOH and other resources produces benefits of adequate value to justify the expenditure. As the analysis (which is elaborated in Annex E) will show, this FP Outreach project which is social and humanitarian on the one hand also appears to be a sound economic investment in the future of Haiti on the other.

The economic analysis of this project proceeds in the following manner: 1) the principal benefits of extending family planning activities in Haiti are enumerated and discussed from both macro economic and micro economic perspectives; 2) the major project outputs and 3) project costs (indirect as well direct) are identified; 4) the cost effectiveness of the project and the three subprograms to be involved in provision of contraceptives and contraceptive services are analyzed; and 5) the result of an illustrative cost-benefit analysis (presented in Annex E) are reviewed.

1. Benefits

The current demographic situation in Haiti, if left unchecked, will serve as a tremendous impediment to the country's social and economic development and exacerbate the demographic pressures and hardships that have resulted in substantial Haitian emigration. In particular, sustained high fertility means that simply maintaining consumption (including public services at current per-capita levels) will require constant growth of consumption expenditures and hinder diversion of resources away from consumption and towards productive investment. In fact, maintaining current levels of economic well-being is likely to be increasingly difficult under a regime of sustained high fertility, since rural overcrowding will contribute to soil erosion and declining agricultural productivity while the high rates of unemployment and under-employment in urban areas seem likely only to worsen.

By contrast, to the extent that this project contributes to a reduction in fertility and hence declining rates of population growth, there will be significant benefits generated for the Haitian economy and people. This is particularly so over the course of the next 15 to 20 years, a period that will be critical in determining the nature of Haiti's longer-term future. A slowing of population growth will bring about important changes in the age structure of the population, and these changes in turn will facilitate Haiti's economic development efforts. Reduced fertility will not have an impact on the labor force until after a period of 15 years, but it will have immediate effects on the child dependency burden. Hence, while Haiti's productive potential will be largely unaffected (through the end of the century) by reduced fertility, alleviation of the heavy burden of child dependency (children under age 15 now constitute more than 40 percent of Haiti's population) will permit increased allocation of scarce resources away from consumption and towards productive investment.

In addition to the macro economic benefits cited above, the project will also bring about important micro economic benefits. Diffusion of knowledge of family planning and of information on factors influencing maternal and child health throughout the population will permit women and couples to assume greater control over their lives*. Households will increasingly be able to regulate their fertility, achieving but not exceeding desired numbers of children (and thereby avoiding the process of stretching scarce household resources as additional unwanted children are born).

---

*Indicative of a desire for such control is the fact that 43 percent of fecund women currently in union want no more children. (Figure reported in James Allman, "Fertility and Family Planning in Haiti", Center for Population and Family Health, Columbia University, 1981, p. 12 and Table 9).

This latter point is particularly important when one considers the fact that fertility is especially high in rural areas, where incomes are generally quite low. This results in an intergenerational transmission of poverty, in which high fertility and poverty appear to be mutually reinforcing. Providing knowledge of family planning and ready access to effective, low-cost methods of contraception offers the distinct prospect of breaking this cycle and improving the socio-economic status of poor households.

The increased ease of access to family planning services that will result from the expansion of these services under the project will generate further benefits in the form of lower costs of acquiring family planning services. As the number of outlets for such services increases, the time required by users to obtain services will diminish. The concomitant reduction in the opportunity cost of acquiring these services constitutes a real (albeit difficult to evaluate) benefit of the project.

Further beneficial effects should be realized as a result of more careful spacing of children. These benefits would be in the form of improved health status of both mothers and young children, resulting in reduced maternal mortality (and increased productivity) and lower rates of malnutrition and infant mortality.

2. Major Project Outputs

There is a wide variety of outputs that will result from the project, including both tangible goods and services (such as greatly expanded contraceptive protection and informational and educational materials) and intangibles (such as greater stock of knowledge and expertise among Haitians concerning population and family planning questions, and a greater capacity for formulating and carrying out policy in the population field). Attempting to weigh these diverse outputs against the various inputs is not possible without some common measuring rod. Conceptually this problem might be resolved by attempting to assign a dollar value to all outputs (and inputs not already so evaluated), but practically such an approach would be unreliable because of the difficulty in evaluating a number of different (especially intangible) outputs.

Alternatively, one can focus on a limited number of key outputs, recognizing that evaluation of the benefits relative to costs based on this more limited analysis will be conservative (i.e., benefits will be understated). This is the approach adopted here. Emphasis will be on two principal project outputs: the contraceptive protection to be provided during the life of the project, and the births averted as a direct result of this contraceptive protection. In this context, then, the contraceptive protection constitutes an intermediate product or output of the project, while the births averted are the final product. Evaluation of each of these outputs is provided below, following a brief discussion of project costs.

3. Project Costs

The overwhelming bulk of the direct value of goods and services to be provided under the project is represented by the global project budget, amounting to 20.1 million dollars. In addition, as indicated below, estimated project inputs funded from AID/Washington and not included in the project budget amount to 810 thousand dollars, resulting in a total figure of 20.9 million dollars (more precisely, $20,944,769).

Estimated Project Inputs Funded by AID/Washington and Not in Project Budget

Source	Amount (000)
Columbia	$435.3
Battelle	35.0
Futures Group	30.0
Westinghouse CPS	70.0
Development Associates (training)	80.0
PIEGO	110.0
IPAVS	50.0
	Total $ 810.3

Indirect costs of the project are those associated with the opportunity cost of time. That is, it takes time to visit clinics to obtain family planning services. There is, presumably, some value of that time to the individuals involved, in the form of activities foregone. Conceptually, this time value (the opportunity cost of the time spent obtaining family planning services) should be included as part of the total cost of the project. As noted earlier, however, the project should result in considerably eased access to family planning services throughout the country, particularly given the community outreach program. This suggests that the time costs for a woman or man to obtain services are not likely to be very high (one exception here would be for voluntary surgical contraception, but this represents only a small portion of the total anticipated contraceptive protection). Consequently, these indirect costs have been ignored in the analyses below.

4. Cost-Effectiveness

Measurement of the cost-effectiveness of the project requires estimates of the cost per unit of output. Such estimates could focus on either the intermediate output, contraceptive protection, or on the final output, births averted. Theoretically, the latter measure is probably more relevant. Practically, however, estimation of births averted requires considerably more assumptions that can be called into question as compared with estimation of contraceptive protection. In light of these considerations, then, both measures have been estimated and are reported below (see Annex E for details of the estimation procedures.)

Contraceptive protection will be provided by a variety of contraceptive methods. The different outputs (condoms distributed, IUDs inserted, pill cycles distributed, etc) can be aggregated into a single output measure, the couple years of protection (CYP) index.* As indicated in the annex,

*This index was originally developed by Samuel Wishik in connection with the family planning program in Pakistan. See Samuel M. Wishik, The Couple-Year of Protection Index: A Method of Measuring Achievement and Prevalence of Contraceptive Protection, International Institute for the Study of Human Reproduction, Columbia University, 1973.

the anticipated contraceptive distribution during the life of the project yields a CYP index of almost 624 thousand.* That is, projected contraceptive use will provide the equivalent of a year's contraceptive protection to well over six hundred thousand Haitian couples. In conjunction with the total cost figure of $20.9 million, this implies a cost of $33.51 per CYP.

Births averted have also been estimated in Annex E. As noted earlier, these estimates are more tenuous than the CYP estimates since they are based on a longer string of assumptions (see Annex E for a fuller discussion and sensitivity analysis). In any case, the estimates suggest that the project will result in roughly 85,000 births averted, in total. These figures, in turn, imply that the cost per birth averted will be on the order of $244.52.

The cost-effectiveness of the three project subpurposes engaged in provision of contraceptives or contraceptive services was also examined. For this exercise, the cost of the policy and management subpurposes as well as GOH and other inputs were imputed to Community Outreach, Services, and Commercial Retail Sales on a prorated basis (based on the allocation of AID expenditures across the three subpurposes)**.

The procedure outlined in the preceding paragraph generated the following results:

	Subpurpose		
	Services	Community Outreach	Commercial Retail Sales
Cost per:			
CYP	$ 33.04	$ 37.63	$ 30.39
Birth averted	254.88	308.76	183.64

*This figure includes only "modern" contraceptive methods; additional contraceptive protection from traditional methods is ignored here. Hence, the figures on cost per unit of contraception will be biased upward.

**Time constraints prevented a more careful allocation of non-AID costs to the three subpurposes.

In considering the data just presented, several points should be kept in mind. First, the large variation in cost per birth averted relative to cost per CYP reflects the greater use effectiveness of the mix of contraceptives to be used in the Commercial Retail Sales program. Second, both the community and CRS programs entail rather high start-up costs, in contrast with Services. Third, attempts to provide contraceptive services via CRS or Services options to those who will be reached through the Community program would likely be considerably more costly than the average CRS or Services figures above. Finally, it should be noted that unlike the CRS program, the Services programs will also promote traditional methods of contraceptive protection. Hence, this suggests that the true costs per CYP or per birth averted will be lower than indicated above for these two programs. On balance, then, while the cost per unit of output does vary somewhat by subpurpose, the preceding considerations help account for these variations and suggest that each subpurpose has an important role to play in the overall functioning of the project.

5. Illustratative Cost-Benefit Analysis

The costs per unit of output have been estimated in the preceding section; here, estimates of the benefits per unit of output are presented, in order to serve as an illustrative cost-benefit analysis (see Annex E for details). An important point to note at the outset is that the estimates reported on in this section entail a highly speculative component, involving a number of assumptions that often are of a largely arbitrary nature. Reasonable and knowledgeable individuals will likely disagree as to the validity of one or more key assumptions. Hence, as indicated by the title of this section, the figures to be presented below should regarded as illustrative in nature, not as definitive.

Estimates of the benefits per unit of output were based on the measure of expected final output, births averted. The underlying logic of calculating the value of a birth averted is quite straightforward. A birth entails a stream of future consumption and a stream of future

production. The net cost of a birth is the present value of the former stream minus the present value of the latter stream, where future sums are discounted to reflect the fact that a dollar today is worth more than a dollar tomorrow.*

Implementing this logic involves estimating the consumption and production streams. Following a suggestion in "Economic Evaluation Procedures for Use with Population-Related Projects"** it was assumed that a child aged 0-4 consumes one fourth of average adult consumption, with the fraction rising to one half for children aged 5-9 and three fourths for children aged 10-14. Given the age structure of the population and per-capita national income, the corresponding lifetime consumption stream (in dollars per year) can be readily calculated (see annex for details). Production was assumed to be carried out by individuals aged 15-59, so dividing per-capita national income by the proportion of such individuals in the population gave average production per year--which was then used to represent the production stream.

Taking the difference between the two, discounting at an annual rate of 10 percent, and adjusting for mortality, a figure of $592 was obtained for the value of a birth averted. That is, the assumptions set forth above, plus the implicit assumption that per capita real incomes will

*The benefit measure used here is the present value of the expected lifetime net consumption stream (consumption minus production). In addition to future production, children also provide a stream of utility (satisfaction) to their parents, and failure to consider this utility suggests at first glance that the estimated benefit of averting a birth will be biased upward. It should be noted, however, that births will be averted by couples desiring to limit their fertility. This choice is indicative of the couples own estimate of the marginal utility of an additional child. Further, allowing for fixed household resources and quality-quantity trade-offs suggests that additional (unwanted) children will likely lower the satisfaction parents will derive from those children already born. On balance, then, the failure to consider the utility of children in estimating the benefits of a birth averted does not appear to impart a serious bias to the calculations.

**Paper by Warren C. Robinson and Wayne A. Schutjer, prepared under a consultant agreement with the American Public Health Association for the Latin American and Caribbean Bureau, Agency for International Development, January 1980, p. 10.

remain stable over time, imply that at birth the present value of a Haitian child's expected lifetime consumption exceeds the present value of expected lifetime production by almost 600 dollars*. This rather dismal conclusion reflects the overpopulation, unemployment, and underemployment that characterize Haiti today.

Comparing the value of a birth averted with the cost, it is apparent that the calculations and estimates presented here suggest that the project is quite a worthwhile investment.** It is useful to recall that a number of assumptions were necessary to arrive at these conclusions, and many of these were largely arbitrary in nature. However, a conscious effort has been made throughout this analysis to be thorough in evaluating the costs per unit of contraception and to lean towards the conservative side in estimating the benefits of the project. In addition, the sensitivity analyses provided in the annex are encouraging, since they suggest that a fairly wide range of assumptions about key parameters is consistent with the same general conclusion: the costs of the proposed project appear to be substantially outweighed by the benefits.

*If real per-capita income were to increase over time, then (given the assumed consumption patterns) the net present value of a Haitian birth would not be so low and would (at some threshold) become positive. On the other hand, if marginal productivity is below average productivity over the long haul and real per-capita income were thus to fall, the estimate in the text will be overly conservative (i.e., the net present value of a birth averted will be greater than 592 dollars). This latter scenario seems more plausible than the former (without implementation of this project); however, for simplicity, the assumption of neither growing nor shrinking per-capita income has been maintained for the calculations of the value of a birth averted.

**As reported in Annex E, even at a 15 percent discount rate, the procedures here imply a value per birth averted of $514, which still compares quite favorably with the estimated cost per birth averted of $246.

E. FINANCIAL ANALYSIS AND PLAN

The total cost of activities to be financed under this project is $17,980,000. The AID grant will contribute $9,615,000 to the total cost and the DSPP/DHF and the non-health GOH and private community organizations will provide $6,555,000 or $3,961,000 and $2,594,000, respectively. The UNFPA contribution is estimated at $1,810,000.

1. A.I.D. Contribution

a. Grant Components

The A.I.D. grant will provide funds in support of the project for the following costs:

1)	Medical Supplies	$ 368,300
2)	Equipment/Renovations	235,413
3)	Training (U.S. and In-Country)	452,195
4)	Local Salaries	893,375
5)	Transport/Per Diem	830,824
6)	Allowances/Fees	668,470
7)	Short-term Consultants	423,510
8)	Services Contracts	1,045,000
9)	Evaluation/Operations Research	254,630
10)	Contraceptives	6,187,383
	Plus 5% Contingency	410,900
	TOTAL	$11,770,000 1/

These planned expenditures are broken down as allocated to local cost reimbursement or AID direct payment by fiscal year in Table 18.

b. Foreign Exchange Component

To facilitate an analysis of project costs, inputs are categorized by project sub-activity in Table 19. Foreign exchange and local currency costs are approximately $6.7 million and $2.9 million, respectively.

1/ The A.I.D. contribution is actually $9,615,000 since $2,155,000 representing estimated costs for Phase II (pilot testing) and Phase III (national extension) of the commercial retail sales component, were deleted from the project to await the results of marketing research activities. A.I.D. is prepared to consider additional assistance under this project component once the marketing research activities are completed.

Table 18

PROJECT FINANCIAL PLAN - INPUTS BY FISCAL YEAR
(In U.S. Dollars)

I USAID Direct Contribution:	1981/82	1983	1984	1985	LOP Total
A. Equipment	$49,350	$46,475	$44,770	$43,918	$184,513
B. Medical Supplies	30,000	30,000	30,000	30,000	120,000
C. Contract Services	225,000	278,500	231,500	160,000	895,000
D. S-T Consultants	125,000	86,000	136,700	75,810	423,510
E. U.S./Third Country TRG	84,000	69,500	68,100	41,655	263,255
F. IEC (Contract)	41,500	34,000	39,000	35,500	150,000
Subtotal	554,850	544,475	550,070	386,883	2,036,278
II. Reimbursable Local Expenses:					
A. Salaries	$277,037	$232,859	$203,950	$179,529	$ 893,375
B. Per diem	127,046	128,554	133,162	130,162	518,924
C. Allowances/ Fees	104,380	144,560	144,530	147,500	540,970
D. Transport	82,950	87,150	75,000	66,800	311,900
E. Training In-Country	32,910	45,160	49,770	61,100	188,940
F. Grant to Action Familiale	28,500	30,000	33,000	36,000	127,500
G. Evaluation/OR	26,000	44,000	102,700	81,930	254,630
H. Renovations	13,450	13,450	12,000	12,000	50,900
I. Expendable Supplies VSC	31,500	42,000	52,500	62,500	188,500
J. Contingency for VSC	10,000	13,800	17,400	18,600	59,800
Subtotal	733,773	781,533	824,012	796,121	3,135,439
III. Centrally Purchased Contraceptives 1/	1,064,377	1,342,370	1,739,523	2,041,113	6,187,383
Plus Contingency 5%	-	125,500	140,900	144,500	410,900
Total AID Inputs	2,353,000	2,793,878	3,254,505	3,368,617	11,770,000
IV. GOH Contribution	1,104,198	1,464,890	1,832,248	2,153,433	6,554,769
V. UNFPA Contribution (Anticipated)	450,000	460,000	450,000	450,000	1,810,000
GRAND TOTAL	$4,907,198	4,718,768	5,536,753	5,972,050	20,134,769

1/ See Table 14 for a detailed breakdown of contraceptives needed and copper clad IUD's to be ordered.

2/ See footnote on previous page.

Table 19

SUMMARY OF PLANNED PROGRAM INPUTS BY SUB-ACTIVITY OVER LIFE OF PROJECT

($000)

	Improved Management	Improved Services	Community Outreach	Contraceptive Retail Sales	Policy Development	TOTAL
I. USAID Direct Contribution:						
A. Equipment	$ 20,263	$ 136,308	$ 1,017	$ 5,000	$ 21,925	$ 184,513
B. Medical Supplies	-	120,000	-	-	-	120,000
C. Contract Services	-	-	120,000	695,000	80,000	895,000
D. Consultants	190,000	30,000	78,510	30,000	95,000	423,510
E. U.S. Training	34,255	45,000	44,000	20,000	112,000	263,255
F. I.E.C. Services Contract	10,000	25,000	50,000	50,000	15,000	150,000
Sub-total.	$ 254,518	$ 356,308	$ 293,527	$ 800,000	$ 331,925	$2,036,278
II. Local Cost Reimbursement:						
A. Salaries	$ 284,107	$ 212,472	$ 300,596	$ 96,200	$ -	$ 893,375
B. Per diem	154,388	183,188	172,848	8,500	-	518,924
C. Allowances/Fees	-	270,370	270,600	-	-	540,970
D. Transport	47,300	128,300	57,300	79,000	-	311,900
E. TrainingIn-Country	19,500	63,440	56,000	20,000	30,000	188,940
F. Renovations	-	48,000	2,900	-	-	50,900
G. Grant to Action Familiale	-	127,500	-	-	-	127,500
H. Contingency for VSC	-	59,800	-	-	-	59,800
I. Evaluation/Operations Research	84,310	35,000	28,000	77,300	30,000	254,630
J. Expendible Supplies (VSC)	-	188,500	-	-	-	188,500
Sub-total.	$ 589,605	$1,316,570	$ 888,244	$ 281,020	$ 60,000	$3,135,439
III. Contraceptives: Condoms-Pills-Foam Tablets - IUDs	-	$2,539,600	$1,558,238	$1,092,513	-	$5,190,351
Contraceptive Stock Reserve/orders	-	-	-	-	-	$ 997,032 1/
Sub-total.	-	$2,539,600	$1,558,238	$1,092,513	-	$6,187,383
TOTAL.	$ 844,123	$4,212,478	$2,740,009	$2,173,533 2/	$ 391,925	$11,359,100
Plus Contingency 5%. . . .	-	-	-	-	-	410,900
GRAND TOTAL.	$ 844,123	$4,212,478	$2,740,009	$2,173,533	$ 391,925	$11,770,000

1/ See Table 14 for detailed breakdown of contraceptives. 2/Funds for Phases II &III of this component, estimated at $2,155,000, may be authorized at a later date, following development & approval of detailed plans for these Phases.

AID contributed foreign exchange represents almost 72% of the total AID contribution to project cost or 42% of the total cost of the project. This is due in part to the contraceptive mix which tends toward condoms which are significantly more expensive to obtain a couple year of protection than pills or IUD's. A second factor which contributes to the high foreign exchange ratio is the relatively large portion of project funds allocated for contractual services for the contraceptive retail sales program. While CRS start up costs tend to be high, experience in other countries has demonstrated that adequate funding in the initial years of a CRS program is critical to its success in generating adequate sales volume and market penetration. Funds allocated for short-term consultants will be extremely important in strengthening the DSPP/DHF capability to plan, implement and evaluate the national F.P. program over the project period and beyond 1985. Only modest amounts of equipment and supplies are budgeted. The AID RHDS project plans to equip and supply the DSPP dispensaries over the next several years. The equipment (largely for VSC) and supplies for MCH/FP which are programmed will compliment rather than duplicate.

c. Local Cost Component

The largest single element of local costs for which the AID grant will pay are salaries for DSPP/DHF full time employees. As shown in Table 20 and Table 22, USAID salary support declines substantially over the life of the project despite a planned salary increase of 15% in FY 1982 and one of 10% in FY 1984. Because of their importance to the attainment of the project purpose, AID salary support for the community outreach staff and the evaluation and research staff are constant throughout the project. Further implications of USAID salary support are discussed below in section 3 which deals with recurrent costs. Other USAID local cost support is intended to provide operational flexibility and mobility to DHF staff to implement and supervise the implementation of the planned outreach activities and the improvement in services. Funds allocated for the local costs of evaluation and operations research are intended to provide the raw data and analytic studies which will underpin the management information system necessary to guide and direct the national program.

Support to Action Familiale which teaches the sympto-thermique method of family planning is a desirable compliment to the cafeteria of modern contraceptive methods offered in the national program. The Community Outreach program relies on community volunteers who receive a bonus at the end of the year. We have planned a two year support for the volunteers as the program expands which will enable adequate time for the GOH to develop alternative mechanisms for supporting community initiatives. (This is shown in Annex C-3).

2. GOH Contribution

a. The Planned GOH contribution includes a $1,506,000 contributior to the salaries of DHF employees and selected field personnel providing MCH/FP services i.e. urban community agents and their supervisors. Table 20 shows the planned GOH contribution by fiscal year. Further details on salaries to be shifted from the donors to the GOH personnel roster are shown in Annex D. Since the project scope is not limited to the health sector we have made an effort to show Haitian contributions from non-DSPP sources. We have, thus, been ultra conservative in including in-kind support for DSPP salaries and operating costs clearly as the RHDS project succeeds in up-grading services additional DSPP contributions to the project will be realized.

Table 20

PLANNED GOH CONTRIBUTIONS TO THE NATIONAL MCH/FP PROGRAM

	1982	1983	1984	1985	Life of Project (1982-1985)
A. DSPP Contributions					
1. Salaries	$301,204	$360,640	$443,559	$467,980	$1,573,383
2. Operating Expenses (Title I)	10,994	36,250	35,689	28,453	111,386
3. Medications (in System)	80,000	80,000	80,000	80,000	320,000
4. Space for VSC procedures	12,000	15,00	18,000	21,000	66,000
5. Health Agents (20% of time)	55,000	111,000	156,000	234,000	556,000
6. Vehicle Maintenance	-	12,000	31,000	31,000	74,000
7. Value of Peripheral Medical Personnel	80,000	96,000	120,000	152,000	448,000
8. Value of Paramedical Personnel	67,000	86,000	108,000	132,000	393,000
9. Value of Field Operating Costs	70,000	91,000	116,000	142,000	419,000
Sub-total DSPP Contribution	$676,198	$887,890	$1,108,248	$1,288,433	$3,960,769
B. Other Haitian In-Kind Contributions					
1. FADH Dispensaries at $1,000	$ 75,000	$ 90,000	$ 90,000	$ 90,000	$ 345,000
2. Community Councils	188,000	262,000	338,000	412,000	1,200,000
3. Community Volunteers	75,000	105,000	135,000	165,000	480,000
4. Min/Plan-Statistics Institute	40,000	45,000	60,000	70,000	215,000
5. ONAAC	15,000	20,000	25,000	30,000	90,000
6. DARNDR Extension Service	10,000	20,000	30,000	40,000	100,000
7. Factories	15,000	23,000	31,000	40,000	109,000
8. Min/Information	10,000	12,000	15,000	18,000	55,000
Sub-total	$428,000	$577,000	$724,000	$865,000	$2,594,000
Total Planned GOH Contribution	$1,104,198	$1,464,890	$1,832,248	$2,153,433	$6,554,769

3. Planned Obligations and Expenditures

The planned schedule of obligations and expenditures is shown in Table 21. An initial obligation of $853,000 is planned in FY 1981. Two hundred sixteen thousand dollars are needed for an order of condoms needed for stock maintenance. The second planned obligation of $1.7 million early in FY 1982 will be necessary to ensure adequate funds for activities planned during FY 1982. In subsequent years, early fiscal year obligation of funds is planned as very little carry over is anticipated.

Planned project costs follow fairly closely those outlined in a preliminary fashion in the project P.I.D. USAID/Haiti had not anticipated the increased cost of contraceptives which now prevails. As a result, the FY 1982 OYB shows inadequate funds to meet project needs. In order to insure availability of funds as required for project implementation, an increase in the FY 1982 and FY1983 OYB for Haiti should be considered as soon as possible. These funds are required to obtain both the contraceptives and the distribution support systems necessary to respond to current Haitian demand for family planning.

Because the planned assistance contains a relatively small amount of equipment and materials which will be ordered from the U.S. we do not anticipate a large pipeline. Some pipeline may result from the CRS contractor services but even this will be a minor part of total planned project expenditures. Systems now in place and the planned improvement in regular reporting on activities should result in the full commitment of funds budgeted for each year of the project. It is important to note however, that the pipeline for oral contraceptives has required the placing of orders and their funding roughly 18 months in advance of delivery. If this lag could be reduced somewhat orals procurement could become less guesstimate and more exact.

Table 21

PLANNED FAMILY PLANNING OUTREACH
OBLIGATIONS AND EXPENDITURES OF AID FUNDS (PROJECT 521-0124)
(In-Thousands of U.S. Dollars)

		FY 1981	FY 1982	FY 1983	FY 1984	FY 1985	LOP
I.	Planned Obligations including Contingency						
	Centrally Procured Contraceptives	216	824	1291	1666	1952	5949
	Bilateral Activities	637	876 1/	1484	1584	1240	5821
	Total Planned Obligation	853	1700 1/	2775	3250	3192	11770
II.	Planned Bilateral AID Expenditures	-	1250	1450	1500	1550	-
III.	Estimated Unexpended Pipeline	-	275	309	393	71	-

1/ Includes $200,000 forward funding in FY 82 to facilitate continuous implementation of f.p. activities at beginning of FY 83, 84 and 85.

4. Recurrent Costs

The GOH shares with AID a concern for recurrent costs. The uncertainty of future donor financing has become a current problem to the GOH as the UNFPA and the rest of the UNDP family have experienced increasing financial problems in the past two years. This project introduces the concepts of "phase out", "joint participation" and "limited duration". Phase out is being applied to salaries of DHF personnel at the central level as well as in selected peripheral posts. Joint participation is sought in the financing of VSC procedures. (The economic benefits in births averted are such that the investment is sound.) In developing and extending geometrically the contacts with the community action councils and the numbers of community volunteers, the recurrent costs could quickly become beyond the available means for their support. We envisage two years support and then phase out or consolidation in a fashion which the GOH can support. Similarly the recurrent costs for VSC can be phased out or over to be the consumer/public once quality services have been established. Reorganization and strengthening of DSPP management and support services will create opportunities for consolidation of the DHF support staff within the departmental framework. This project has been designed to minimize creation of recurrent cost elements. The CRS activity is specifically geared to elicit private consumer financial participation in the national program. As it now stands the annual cost of family planning including all AID contributions is about one fourth of the current operating budget of the DSPP from the treasury. It is not inconceivable that with a reordering of priorities increased GOH resources can be found to increasingly support costs of the f.p. program. We conclude therefore that the long-term recurrent costs of a national family planning program are affordable and within Haitian means to support particularly if mechanisms for contraceptive procurement at reasonable prices can be assured. Table 22 shows a comparison of AID and GOH salary support over the life of project.

Table 22

COMPARISON OF AID AND GOH SALARY SUPPORT FOR DHF OVER LIFE OF PROJECT
(in 000's)

	1981 1/	1982	1983	1984	1985	Total
USAID paid salaries	424	267	223	204	180	893
Share of Total Salary Costs	84%	47%	38%	32%	29%	36%
GOH paid salaries	81	301	360	443	468	1,593
Share of Total Salary	16%	53%	62%	68%	72%	64%
	505	568	583	647	648	2,446

1/ Pre-project

V. PROJECT IMPLEMENTATION

A. Implementation Plan

The project is scheduled for FY 1981 authorization with an initial A.I.D. obligation of $853,000. These funds will be obligated in a September 1981 agreement with the Government of Haiti. Further A.I.D. funding will be made available in annual increments. A first quarter FY 1982 obligation will facilitate orderly project implementation. Table 24 shows critical project milestones in project implementation.

The project has been designed to coincide with the budget year of both the GOH and A.I.D. This should assist in monitoring host government contributions and plans. Certain activities will remain on a calendar year basis such as annual and semiannual reporting, UNFPA funding, analysis of contraceptive needs etc. By advancing the planning cycle and scheduling of work to begin in October it is hoped to minimize the slow January start encountered in prior projects. This should also facilitate the USAID scheduling of project obligations early in the fiscal year to avoid the problems of last quarter obligations.

Each year the DSPP/DHF will prepare its annual plan of activities so that as the new fiscal year begins delays in approvals will not be created.

Table 23

PROJECT IMPLEMENTATION PLAN - MAJOR MILESTONES, DOCUMENTATION AND IMPLEMENTATION SCHEDULES

	Responsible Agency	FY 81	FY 82	FY 83	FY 84	FY 85
A. Project Documentation Schedule						
Completion of PP, AID/W approval, Obligation of Funds	US/GOH					
Completion of Annual Plan (Budget, Personnel, Training)	GOH					
Approval of Budget for 1982 and subsequent years	AID					
Fulfillment of Conditions Precedent to disbursements	GOH					
B. Project Implementation Cycle						
Commodity Requirements Defined and Requested	GOH					
Contraceptive Distribution and Stock Report Submitted	GOH					
Implementation Documents (PIO/Cs Prepared)	AID					
(PIO/Ts ")						
(PIO/Ps ")						
Renovation Plans Received/Approved	AID					
	GOH					
Quarterly Reports Available	DHF					
Contraceptives Requested	DHF					
Ordered	AID					
Commodities Received						
C. Critical Project Milestones						
Initial Obligation of Funds						
Satisfaction of Initial Conditions Precedent	GOH					
October AID/UNFPA/DHF-DSPP Review (1982)	ALL					
Approval of 1982 DHF Budget						
Obligation of 1982 Funds						
Completion of CRS Marketing Plan (Phase I)						
CRS Phase II begins and ends						
Joint Evaluation of Project						
Necessary Replanning/Revisions Made						
Community Outreach Plan for Non-Health Groups Completed						
Contraceptive Prevalence Survey Completed						

B. Disbursement Procedures

1. Local Costs

AID will fund project local costs in accordance with annual budgets and workplans. Payments will be made by the reimbursement method upon submission of documentation as required by AID. Adequate advances for local expenses will be made available to enable the DHF to implement activities as scheduled in the Annual Implementation plans. Procedures for disbursement and reimbursement will be spelled out in Project Implementation Letters (PILs)

2. Direct USAID Payments

As specifically requested in writing by the DSPP/DHF, USAID will prepare and execute project implementation actions for short-term consultants, equipment, expendible supplies and contraceptives. Procedures for such requests will be spelled out in project implementation letters.

C. Procurement and Contracting Procedures

In accordance with the decision made by the Administrator on July 14, 1977, all goods and services for this Project will be procured from countries in AID Geographic Code 941 and the Host Country. It is AID's policy, however, that the eligible source for all pharmaceuticals (finished and unfinished) shall be the United States (Code 000). Therefore, unless waivers are issued from AID/W, this policy will be complied with. Technical assistance contracts will be procured through competitive negotiation in accordance with AID Standard Regulations for the following:

1) IEC Assistance for the design and testing of appropriate informational and educational materials in Creole;

2) a sales management contract for the CRS program; and

3) a local advertising and sales promotion contract for the CRS program.

Short-term technical assistance will be obtained through IQC contractors or through competitive negotiation in accordance with U.S. contracting procedures.

D. USAID Monitoring Requirements

The USAID Project committee will monitor this Project and will have the following responsibilities:

1. Project Management and Monitoring

The Project Manager will be the Population Officer assigned from the Mission's Population and Health Office. The Population Officer will work closely with the DHF's Director and staff representatives of other participating agencies, and centrally funded contract groups and short-term consultants to ensure that the provisions of the AID Project Agreement and Implementation Letters are met. The Population Officer will be assisted by the Mission Project Committee and will work closely with the Project Manager of the Rural Health Delivery Systems Project so as to assure complimentary implementation and close coordination of both Mission-funded projects.

The Mission's Project Design and Coordination Office (PDC) will monitor project implementation and ensure that adequate control and management methods are being used. PDC also will prepare and negotiate the Project Agreement, draft Implementation Letters, and will review all materials submitted to satisfy CP's.

2. Joint Reviews

Joint reviews, undertaken by AID and GOH/DSPP(DHF) representatives, will be held at least quarterly and will be an essential feature of project implementation.

3. Evaluation

The Mission's Population Officer working with the Mission's Evaluation Office will coordinate periodic evaluations.

4. Disbursement

The Mission Controller will review disbursement requests and disbursements to ensure conformity with AID regulations and adequate financial control.

5. Contracting

The Regional Contract Office will work with the Project Manager and the DSPP/DHF in the procurement of technical assistance, drugs, and other commodities.

6. Additional Mission Support

Additional Mission offices, such as Development Resources and the Executive Office and the Regional Legal Officer will be called upon as appropriate.

7. Reports

The DHF will submit to AID the following reports to assist the Mission in monitoring the Project:

a) A quarterly report of completed activities and project expenditures as well as expenditure projections for the following quarter.

b) An annual implementation plan, including planned project activities for the coming year, a staffing plan and an annual budget showing GOH counterpart allocations and AID local currency requirements.

c) Quarterly reports on commodity and contraceptive supplies received, distributed and used.

E. Evaluation Plan

In addition to the quarterly reports submitted by the DHF to USAID, the quarterly project reviews with all donors and the continued monitoring by the USAID Population Officer, two major joint evaluations will be undertaken: (1) the first evaluation will be in mid FY 83 and (2) at the end of FY 85.

(1) FY 83 Evaluation

Each of the five sub-project activities will be evaluated separately to examine (a) whether purpose and outputs are being met and,(b) if activities and tasks are being accomplished in keeping with the implementation schedule on page 121 section A.
The evaluation will draw upon data from the Contraceptive Prevalence Survey planned for FY 82. The evaluation team will assess overall project management and supervision and analyze technical assistance. If problems are detected, the evaluation will offer specific steps to remedy the identified difficulties.
Additionally, in order to best utilize UNFPA's resources, its role will be re-assessed and re-analyzed in terms of its continuing support and financial contribution and recommendations will be made accordingly.

(2) FY 85 Evaluation

The final evaluation, to be undertaken shortly before project completion, will concentrate on project impact. The evaluation will (a) determine the attainment of Project goals and purpose as described in Section III, A, B, and D and in the Project Logical Framework (Annex VI B), and (b) make recommendations for the overall direction of further Population/FP activities in Haiti.

For each evaluation, AID and DSPP/DHF will define the evaluation protocol and recruit a team of multidisciplinary expert consultants to undertake the required assessments. In order to ensure that the evaluation process contributes to the overall development of the national family planning program the DSPP/DHF will nominate a representative to work with the evaluation team.

F. Conditions Precedents, Covenants and Special Provisions

See Annex A, Exhibit 3.

ANNEX A

EXHIBIT 1

CERTIFICATION PURSUANT TO SECTION 611(e) OF THE

FOREIGN ASSISTANCE ACT OF 1961, AS AMENDED

I, Harlan H. HOBGOOD, the principal officer of the Agency for International Development in Haiti, having taken into account among other factors, the maintainance and utilization of projects in Haiti previously financed or assisted by the United States, do hereby certify that in my judgement Haiti has both the financial capability and human resources capability to effectively maintain and utilize the proposed Project: FAMILY PLANNING OUTREACH.

8-28-81
Date

USAID/Haiti Director

J.P.P. No. 10

SEP 1 0 1981
ANNEX A
Exhibit 2

REPUBLIQUE D HAITI

SEP 11 10 AM '81
U.S.A.I.D./HAITI

SECRETAIRERIE D'ETAT DE LA SANTE PUBLIQUE ET DE LA POPULATION

4243

PORT-AU-PRINCE, HAITI, 8 Septembre 1981

Monsieur Halan HODGOOD
Directeur de l'U.S.A.I.D. en Haiti
En Ses Bureaux

Monsieur le Directeur,

En référence au calendrier des obligations et des dépenses planifiées pour l'exécution du Projet de Planification Familiale 521-0124, je vous saurais gré de bien vouloir faire remplir les formalités usuelles, pour que la contribution initiale de votre Organisme, prévue pour l'année fiscale 1981-1982, soit rendue disponible opportunément.

Cette démarche à caractère purement administratif vise l'élimination des problèmes financiers qui pourraient surgir au cours du développement du projet.

Dans l'espoir qu'elle sera appréciée à sa juste valeur, je vous prie d'agréer, avec mes remerciements anticipés, l'expression de ma considération distinguée.

SECRETAIRERIE SANTE PUBLIQUE ET POPULATION

Gérard DESIR
Secrétaire de la Santé Publique
Et de la Population

EC'D
D ROUTER
ACT INF
ON TAKEN

Une 9/21/81

ANNEX A
Exhibit 2
14 SEP 1980

[redacted]

REPUBLIQUE D'HAITI

SECRETAIRERIE D'ETAT DE LA SANTE PUBLIQUE ET DE LA POPULATION

[illegible]

Monsieur Halan HOXWOOD
Directeur de l'AID
En Ses Bureaux

Monsieur le Directeur,

La lettre au numéro 4 45, qui [illegible] à la date [illegible] Septembre écoulé sollicitait l'aide de l'AID pour le Projet de Planification Familiale 521-0124 pour l'année fiscale 1981-1982.

Le document de référence comportant un plan quinquennal d'[illegible]tion, nous pensons que l'aide doit plutôt être examinée pour les exercices 1981-1982 à 1984-1985.

Nous nous excusons pour cette [illegible], et [illegible] la occasion pour vous renouveler l'assurance [illegible]

[illegible]

ANNEX A

EXHIBIT 3

DRAFT

PROJECT AUTHORIZATION AND REQUEST

FOR ALLOTMENT OF FUNDS

Name of Entity : Government of Haiti

Name of Project : Family Planning Outreach

Project Number : 521-0124

Pursuant to Part 1 Chapter 1 Section 104 and Chapter 2, Title X of the Foreign Assistance Act of 1961, as amended, I hereby authorize a Grant to the Republic of Haiti ("Grantee") of not to exceed Eight Hundred Fifty Three Thousand United States Dollars ($853,000) (the "Authorized Amount") to help in financing certain foreign exchange and local currency costs of goods and services required for the Family Planning Outreach project hereinafter described. The project consists of assisting the Government of Haiti to establish a cost-effective national family program by implementing activities in the following areas: a) management improvement; b) services improvement; c) community outreach; d) contraceptive retail sales; and, e) population policy stimulation. Project assistance will include AID centrally-procured contraceptives estimated at $ 5,949,020, provision of technical assistance, equipment and supplies and local cost support. I approve the total level of A.I.D. appropriated funding planned for this Project of not to exceed Eleven Million Seven Hundred Seventy Thousand United States Dollars ($11,770,000), including the funding authorized above, during the period FY 1981 through FY 1985. I approve further increments during that period of Grant funding up to $10,917,000, subject to the availability of funds in accordance with A.I.D. allotment procedures. I hereby authorize the initiation of negotiation and execution of the Project Agreement by the officer to whom such authority has been delegated in accordance with A.I.D. regulations and Delegations of Authority, subject to the following essential terms and conditions as A.I.D. may deem appropriate:

(A) Source and Origin of Goods and Services (Grant)

Goods and services, except for ocean shipping, financed by A.I.D. under the Grant shall have their source and origin in Haiti or the United States, except as A.I.D. may otherwise agree in writing. Ocean shipping financed by A.I.D. under the Grant shall, except as A.I.D. may otherwise agree in writing, be financed only on flag vessels of the United States.

(B) Conditions Precedent to Initial Disbursement

Unless AID otherwise agrees in writing, prior to the first disbursement under the Grant, or to the issuance by AID of documentation pursuant to which disbursement will be made, Grantee will furnish in form and substance satisfactory to AID:

1. An opinion of Counsel that this Agreement has been duly authorized and/or ratified by, and executed on behalf of, the Grantee and that it constitutes a valid and legally binding obligation of the Grantee in accordance with all its terms;

2. The name (s) of the person (s) holding or acting in the office (s) as authorized representative (s) of the Grantee together with specimen signatures of his (their) authority for the purpose of this project;

3. An annual operational plan for the Family Planning Outreach Project. Each operational plan shall include a staffing plan, the proposed budget and an implementation plan.

The staffing plan should describe the personnel to be provided by the DSPP/DHF at each level of activity. The budget should indicate the DSPP/DHF budgetary allocations for the current budget period for each activity as well as the planned AID local cost contribution. The implementation plan should describe how DHF/DSPP plans to allocate its inputs per activity during that budget year. An operational plan shall be submitted prior to the beginning of each subsequent fiscal year.

(C) Conditions Precedent to Subsequent Disbursement

Unless AID otherwise agrees in writing prior to any subsequent disbursement or the issurance of commitment documents under the Project to finance activities, the DSPP/DHF shall furnish in form and substance satisfactory to AID reports of activities, expenditures and results for the prior year and an annual Operational Plan for the following year. In addition, in the following instances:

1. prior to any disbursement for Phase II of the Contraceptive Retail Sales Program, an approved marketing and sales management plan shall be submitted to USAID/Haiti in a form and substance satisfactory to AID;

2. prior to disbursement of grant funds for facility renovation or rehabilitation utilizing grant funds, the DSPP/DHF shall provide in a form and substance satisfactory to AID, information on the population to be served and/or other basis for selecting each facility to be improved, a schedule for equiping and staffing each facility, the estimated cost and proposed contractor, the

architectual plan and proposed physical modifications, and a brief description of the planned services which will ultimately be provided in the facility;

3. prior to any disbursement for mini-projects, the DSPP/DHF shall develop and submit to AID a plan for working with and through private and voluntary groups in the selection, monitoring and evaluation of community outreach activities and particularly such mini-projects as may be under consideration for the following year.

(D) Convenants

Except as A.I.D. may otherwise agree in writing, the Grantee (the Government of Haiti) shall covenant and agree:

a. To carry out Project activities in accordance with relevant United States legislation on family planning, as from time to time may be explained in Project Implementation Letters.

b. That it will continue to provide sufficient annual budget allocations following completion of AID financing so as to assure continuity of the Project activities, including maintenance of Project funded equipment, supervision by health personnel of the activities which were funded under the Project; and salary support for key personnel.

c. To consider all possible ways and means of progressively increasing Government of Haiti revenues available for family planning so as to lessen the dependence of this program on external donor contributions.

d. To consider formulation of an official population policy giving family planning high priority in the context of improved family well-being and in the context of demographic goals.

e. That no funds made available under this Grant will be used to finance, support, or be attributed to the following activities: (1) procurement or distribution of equipment intended to be used for the purpose of inducing abortions as a method of family planning; (2) special fees or incentives to women to coerce or motivate them to have abortions; (3) payments to persons to perform abortions or to solicit persons to undergo abortions; and (4) information, education, training, or communication programs that seek to promote abortion as a method of family planning.

f. That the Grantee agrees to take any steps necessary to ensure that funds made available under this grant will not be used to coerce any individual to practice methods of family planning inconsistent with such individual's moral, philosophical, or

religious beliefs. Further, the Grantee agrees to conduct its activities in a manner which safeguards the rights, health and welfare of all individuals who take part in the program.

g. That none of the funds made available under this grant shall be used to pay for the performance of involuntary sterilization as a method of family planning or to coerce or provide any financial incentive to any person to practice sterilization.

h. That the Grantee shall insure that any surgical sterilization procedures supported in whole or in part by funds from this grant are performed only after the individual has voluntarily presented himself or herself at the treatment facility and has given his or her informed consent to the sterilization procedure. Informed consent means the voluntary, knowing assent from the individual after he or she has been advised of the surgical procedures to be followed, the attendant discomforts and risks, the benefits to be expected, the availability of alternative methods of family planning, the purpose of the operation and its irreversibility, and his or her option to withdraw consent anytime prior to the operation. An individual's consent is considered voluntary if it is based upon the exercise of free choice and is not obtained by any special inducement or any element of force, fraud, deceit, duress or other forms of coercion or misrepresentation.

i. That the Grantee shall document the patient's informed consent by (1) a written consent document in a language the patient understands and speaks, which explains the basic elements of informed consent, as set out above, and which is signed by the individual and by the attending physician or by the authorized assistant of the attending physician; or (2) when a patient is unable to read adequately a written certification by the attending physician or by the authorized assistant of the attending physician that the basic elements of informed consent above were orally presented to the patient, and that the patient thereafter consented to the performance of the operation. The receipt of the oral explanation shall be acknowledged by the patient's mark on the certification and by the signature or mark of a witness who shall be of the same sex and speak the same language as the patient.

j. That copies of informed consent forms and certification documents for each voluntary sterilization (VS) procedure must be retained by the Grantee for a period of three years after performance of the sterilization procedure.

k. That the Grantee shall insert paragraphs e,f,g,h,i,j,k of this provision in all subgrants, subcontracts, purchase orders, and only other subordinate agreements hereunder involving the

performance of any abortion or sterilization which will be supported in whole or in part from funds under this Grant.

_____

Administrator

Date_____

ANNEX A

EXHIBIT 4

5C(1) - COUNTRY CHECKLIST

Listed below are, first, statutory criteria applicable generally to FAA funds, and then criteria applicable to individual fund sources: Development Asistance and Economic Support Fund.

A. GENERAL CRITERIA FOR COUNTRY ELIGIBILITY

1. FAA Sec. 116. Can it be demonstrated that contemplated assistance will directly benefit the needy? If not, has the Department of State determined that this government has engaged in a consistent pattern of gross violations of internationally recognized human rights?	Yes, the project will facilitate access of the rural poor of Haiti to family planning services.
2. FAA Sec. 481. Has it been determined that the government of recipient country has failed to take adequate steps to prevent narcotics drugs and other controlled substances (as defined by the Comprehensive Drug Abuse Prevention and Control Act of 1970) produced or processed, in whole or in part, in such country, or transported through such country, from being sold illegally within the jurisdiction of such country to U.S. Government personnel or their dependents, or from entering the United States unlawfully?	No.
3. FAA Sec. 620(b). If assistance is to a government, has the Secretary of State determined that it is not controlled by the international Communist movement?	Yes
4. FAA Sec. 620(c). If assistance is to government, is the government liable as debtor or unconditional guarantor on any debt to a U.S. citizen for goods or services furnished or ordered where (a) such citizen has exhausted available legal remedies and (b) debt is not denied or contested by such government?	No
5. FAA Sec. 620(e)(1). If assistance is to a government, has it (including government agencies or subdivisions) taken any action which has the effect of nationalizing, expropriating, or otherwise seizing ownership or control of property of U.S. citizens or entities beneficially owned by them without taking steps to discharge its obligations toward such citizens or entities?	No

ANNEX A
Exhibit 4.2

A.

6. FAA Sec. 620(a), 620(f); FY 79 App. Act, Sec. 108, 114 and 606. Is recipient country a Communist country? Will assistance be provided to the Socialist Republic of Vietnam, Cambodia, Laos, Cuba, Uganda, Mozambique, or Angola?	No
7. FAA Sec. 620(i). Is recipient country in any way involved in (a) subversion of, or military aggression against, the United States or any country receiving U.S. assistance, or (b) the planning of such subversion or aggression?	No
8. FAA Sec. 620 (j). Has the country permitted, or failed to take adequate measures to prevent, the damage or destruction, by mob action, of U.S. property?	No
9. FAA Sec. 620(l). If the country has failed to institute the investment guaranty program for the specific risks of expropriation, inconvertibility or confiscation, has the AID Administrator within the past year considered denying assistance to such government for this reason?	No
10. FAA Sec. 620(o); Fishermen's Protective Act of 1967, as amended, Sec. 5. If country has seized, or imposed any penalty or sanction against, any U.S. fishing activities in international waters: a. has any deduction required by the Fishermen's Protective Act been made? b. has complete denial of assistance been considered by AID Administrator?	This has not happened.
11. FAA Sec. 620; FY 79 App. Act, Sec. 603. (a) Is the government of the recipient country in default for more than 6 months on interest or principal of any AID loan to the country? (b) Is country in default exceeding one year on interest or principal on U.S. loan under program for which App. Act appropriates funds?	No
12. FAA Sec. 620(s). If contemplated assistance is development loan or from Economic Support Fund, has the Administrator taken into account the percentage of the country's budget which is for military expenditures, the amount of foreign exchange spent on military equipment and the	This is a Development Grant.

A.12.

Annex A
Exhibit 4.3

amount spent for the purchase of sophisticated weapons systems? (An affirmative answer may refer to the record of the annual "Taking Into Consideration" memo: "Yes, as reported in annual report on implementation of Sec. 620(s)." This report is prepared at time of approval by the Administrator of the Operational Year Budget and can be the basis for an affirmative answer during the fiscal year unless significant changes in circumstances occur.)

13. FAA Sec. 620(t). Has the country severed diplomatic relations with the United States? If so, have they been resumed and have new bilateral assistance agreements been negotiated and entered into since such resumption? — No

14. FAA Sec. 620(u). What is the payment status of the country's U.N. obligations? If the country is in arrears, were such arrearages taken into account by the AID Administrator in determining the current AID Operational Year Budget? — Haiti is not in arrears.

15. FAA Sec. 620A, FY 79 App. Act, Sec. 607. Has the country granted sanctuary from prosecution to any individual or group which has committed an act of international terrorism? — No

16. FAA Sec. 666. Does the country object, on basis of race, religion, national origin or sex, to the presence of any officer or employee of the U.S. there to carry out economic development program under FAA? — No

17. FAA Sec. 669, 670. Has the country, after August 3, 1977, delivered or received nuclear enrichment or reprocessing equipment, materials, or technology, without specified arrangements or safeguards? Has it detonated a nuclear device after August 3, 1977, although not a "nuclear-weapon State" under the nonproliferation treaty? — No

B. FUNDING CRITERIA FOR COUNTRY ELIGIBILITY

1. Development Assistance Country Criteria

a. FAA Sec. 102(b)(4). Have criteria been established and taken into account to assess commitment progress of country in effectively involving the poor in development, on such indexes as: (1) increase in agricultural productivity through small-farm labor intensive agriculture, (2) reduced infant mortality, (3) control of population growth, (4) equality of income distribution, (5) reduction of unemployment, and (6) increased literacy? — Yes

Annex A
Exhibit 4.4

B.1.

b. FAA Sec. 104(d)(1). If appropriate, is this development (including Sahel) activity designed to build motivation for smaller families through modification of economic and social conditions supportive of the desire for large families in programs such as education in and out of school, nutrition, disease control, maternal and child health services, agricultural production, rural development, and assistance to urban poor?

Yes, this project will assist the GOH to develop population policies and services geared to achieving smaller families and improving the well-being of the most disadvantaged.

2. Economic Support Fund Country Criteria

a. FAA Sec. 502B. Has the country engaged in a consistent pattern of gross violations of internationally recognized human rights?

N.A.

b. FAA Sec. 533(b). Will assistance under the Southern Africa program be provided to Mozambique, Angola, Tanzania, or Zambia? If so, has President determined (and reported to the Congress) that such assistance will further U.S. foreign policy interests?

c. FAA Sec. 609. If commodities are to be granted so that sale proceeds will accrue to the recipient country, have Special Account (counterpart) arrangements been made?

d. FY 79 App. Act, Sec. 113. Will assistance be provided for the purpose of aiding directly the efforts of the government of such country to repress the legitimate rights of the population of such country contrary to the Universal Declaration of Human Rights?

e. FAA Sec. 620B. Will security supporting assistance be furnished to Argentina after September 30, 1978?

Annex A
Exhibit 4.5

5C(2) - PROJECT CHECKLIST

Listed below are statutory criteria applicable generally to projects with FAA funds and project criteria applicable to individual fund sources: Development Assistance (with a subcategory for criteria applicable only to loans); and Economic Support Fund.

CROSS REFERENCES: IS COUNTRY CHECKLIST UP TO DATE?
HAS STANDARD ITEM CHECKLIST BEEN REVIEWED FOR THIS PRODUCT?

A. GENERAL CRITERIA FOR PROJECT

1. FY 79 App. Act Unnumbered; FAA Sec. 653 (b); Sec. 634A. (a) Describe how Committees on Appropriations of Senate and House have been or will be notified concerning the project; (b) is assistance within (Operational Year Budget) country or international organization allocation reported to Congress (or not more than $1 million over that figure)?	A) The project was included in the FY 1981 Congressional Presentation & a special notification has been made to update the project information.
2. FAA Sec. 611(a)(1). Prior to obligation in excess of $100,000, will there be (a) engineering, financial, and other plans necessary to carry out the assistance and (b) a reasonably firm estimate of the cost to the U.S. of the assistance?	B) YES A) Yes
3. FAA Sec. 611(a)(2). If further legislative action is required within recipient country, what is basis for reasonable expectation that such action will be completed in time to permit orderly accomplishment of purpose of the assistance?	B) Yes
4. FAA Sec. 611(b); FY 79 App. Act Sec. 101. If for water or water-related land resource construction, has project met the standards and criteria as per the Principles and Standards for Planning Water and Related Land Resources dated October 25, 1973?	This is not required for project. Not Applicable.
5. FAA Sec. 611(e). If project is capital assistance (e.g., construction), and all U.S. assistance for it will exceed $1 million, has Mission Director certified and Regional Assistant Administrator taken into consideration the country's capability effectively to maintain and utilize the project?	Capital assistance in this project is less than $1 million.
6. FAA Sec. 209. Is project susceptible of execution as part of regional or multilateral project? If so why is project not so executed? Information and conclusion whether assistance will encourage regional development programs.	The project, being specific to Haiti, is not susceptible for implementation as a regional project. The project is being executed in close collaboration with the UNFPA.

Annex A
Exhibit 4.6

A.

7. FAA Sec. 601(a). Information and conclusions whether project will encourage efforts of the country to: (a) increase the flow of international trade; (b) foster private initiative and competition; (c) encourage development and use of cooperatives, credit unions, and savings and loan associations; (d) discourage monopolistic practices; (e) improve technical efficiency of industry, agriculture and commerce; and (f) strengthen free labor unions.	The project will have little or no effect on these conditions.
8. FAA Sec. 601(b). Information and conclusion on how project will encourage U.S. private trade and investment abroad and encourage private U.S. participation in foreign assistance programs (including use of private trade channels and the services of U.S. private enterprise).	The project is too small to have any impact on U.S. private trade and investment. The project may involve the participation of private U.S. technical assistance firms.
9. FAA Sec. 612(b); Sec. 636(h). Describe steps taken to assure that, to the maximum extent possible, the country is contributing local currencies to meet the cost of contractual and other services, and foreign currencies owned by the U.S. are utilized to meet the cost of contractual and other services.	There are no U.S. owned foreign currencies available in Haiti. About 30% of the total project costs will be provided for from Haitian sources.
10. FAA Sec. 612(d). Does the U.S. own excess foreign currency of the country and, if so, what arrangements have been made for its release?	Not available.
11. FAA Sec. 601(e). Will the project utilize competitive selection procedures for the awarding of contracts, except where applicable procurement rules allow otherwise?	Yes
12. FY 79 App. Act Sec. 608. If assistance is for the production of any commodity for export, is the commodity likely to be in surplus on world markets at the time the resulting productive capacity becomes operative, and is such assistance likely to cause substantial injury to U.S. producers of the same, similar, or competing commodity?	Not applicable

B. FUNDING CRITERIA FOR PROJECT

1. Development Assistance Project Criteria

a. FAA Sec. 102(b); 111; 113; 281a. Extent to which activity will (a) effectively involve the poor in development, by extending access to economy at local level, increasing labor-intensive production and the use of appropriate technology, spreading investment out from cities to small towns and rural areas, and insuring wide participation of the poor in the benefits of development on a sustained	a) The project creates broader access to family planning services in rural areas. b) The project will work directly with local community action councils to assume increasing responsibility for community health and family planning activities.

B.1.a.

Annex A
Exhibit 4.7

basis, using the appropriate U.S. institutions; (b) help develop cooperatives, especially by technical assistance, to assist rural and urban poor to help themselves toward better life, and otherwise encourage democratic private and local governmental institutions; (c) support the self-help efforts of developing countries; (d) promote the participation of women in the national economies of developing countries and the improvement of women's status; and (e) utilize and encourage regional cooperation by developing countries?

c) The project will thus assist the community development activities sponsored by the GOH so as to increase individual opportunities in the rural sector.

d) Women will be active beneficiaries and participants in project activities.

b. FAA Sec. 103, 103A, 104, 105, 106, 107. Is assistance being made available: (include only applicable paragraph which corresponds to source of funds used. If more than one fund source is used for project, include relevant paragraph for each fund source.)

e) Not applicable.

(1) [103] for agriculture, rural development or nutrition; if so, extent to which activity is specifically designed to increase productivity and income of rural poor; [103A] if for agricultural research, is full account taken of needs of small farmers;

(2) [104] for population planning under sec. 104(b) or health under sec. 104(c); if so, extent to which activity emphasizes low-cost, integrated delivery systems for health, nutrition and family planning for the poorest people, with particular attention to the needs of mothers and young children, using paramedical and auxiliary medical personnel, clinics and health posts, commercial distribution systems and other modes of community research.

The project is specifically designed to strengthen cost effective integrated f.p. services using paramedical and auxiliary staff as well as community service networks and commercial distribution systems.

(3) [105] for education, public administration, or human resources development; if so, extent to which activity strengthens nonformal education, makes formal education more relevant, especially for rural families and urban poor, or strengthens management capability of institutions enabling the poor to participate in development;

(4) [106] for technical assistance, energy, research, reconstruction, and selected development problems; if so, extent activity is:

(i) technical cooperation and development, especially with U.S. private and voluntary, or regional and international development, organizations;

(ii) to help alleviate energy problems;

(iii) research into, and evaluation of, economic development processes and techniques;

(iv) reconstruction after natural or manmade disaster;

Annex A
Exhibit 4.8

B.1.b.(4).

(v) for special development problem, and to enable proper utilization of earlier U.S. infrastructure, etc., assistance;

(vi) for programs of urban development, especially small labor-intensive enterprises, marketing systems, and financial or other institutions to help urban poor participate in economic and social development.

c. [107] Is appropriate effort placed on use of appropriate technology?

d. FAA Sec. 110(a). Will the recipient country provide at least 25% of the costs of the program, project, or activity with respect to which the assistance is to be furnished (or has the latter cost-sharing requirement been waived for a "relatively least-developed" country)?

Yes, the Grant Agreement will require GOH to provide assurances of the availability and proper allocation of funds for the project. The GOH contritution amounts to more than 25% of project costs.

e. FAA Sec. 110(b). Will grant capital assistance be disbursed for project over more than 3 years? If so, has justification satisfactory to the Congress been made, and efforts for other financing, or is the recipient country "relatively least developed"?

Yes, however the amounts are small and recipient country is "relatively least developed" country.

f. FAA Sec. 281(b). Describe extent to which program recognizes the particular needs, desires, and capacities of the people of the country; utilizes the country's intellectual resources to encourage institutional development; and supports civil education and training in skills required for effective participation in governmental and political processes essential to self-government.

The project directly responds to the needs of GOH by encouraging institutional development through technical and training assistance. The project recognizes the needs of the country to increase production in rural areas and creating job opportunities for the rural poor.

g. FAA Sec. 122(b). Does the activity give reasonable promise of contributing to the development of economic resources, or to the increase or productive capacities and self-sustaining economic growth?

The project will contribute to economic development by reducing the dependency burden and enhancing the resources available for improvements in national well-being.

2. Development Assistance Project Criteria (Loans Only)

a. FAA Sec. 122(b). Information and conclusion on capacity of the country to repay the loan, including reasonableness of repayment prospects.

Not applicable.

b. FAA Sec. 620(d). If assistance is for any productive enterprise which will compete in the U.S. with U.S. enterprise, is there an agreement by the recipient country to prevent export to the U.S. of more than 20% of the enterprise's annual production during the life of the loan?

Not applicable.

Annex A
Exhibit 4.9

B.

3. Project Criteria Solely for Economic Support Fund

a. FAA Sec. 531(a). Will this assistance support promote economic or political stability? To the extent possible, does it reflect the policy directions of section 102?

Yes, this project will promote economic stability in rural areas by assisting individual families and communities to reduce the number of young dependents competing for food, employment and scarce economic resources.

b. FAA Sec. 533. Will assistance under this chapter be used for military, or paramilitary activities?

No.

Annex A
Exhibit 4.10

5C(3) - STANDARD ITEM CHECKLIST

Listed below are statutory items which normally will be covered routinely in those provisions of an assistance agreement dealing with its implementation, or covered in the agreement by imposing limits on certain uses of funds.

These items are arranged under the general headings of (A) Procurement, (B) Construction, and (C) Other Restrictions.

A. Procurement

1. FAA Sec. 602. Are there arrangements to permit U.S. small business to participate equitably in the furnishing of goods and services financed?	Yes
2. FAA Sec. 604(a). Will all commodity procurement financed be from the U.S. except as otherwise determined by the President or under delegation from him?	Yes
3. FAA Sec. 604(d). If the cooperating country discriminates against U.S. marine insurance companies, will agreement require that marine insurance be placed in the United States on commodities financed?	Yes
4. FAA Sec. 604(e). If offshore procurement of agricultural commodity or product is to be financed, is there provision against such procurement when the domestic price of such commodity is less than parity?	N.A.
5. FAA Sec. 608(a). Will U.S. Government excess personal property be utilized wherever practicable in lieu of the procurement of new items?	Yes
6. FAA Sec. 603. (a) Compliance with requirement in section 901(b) of the Merchant Marine Act of 1936, as amended, that at least 50 per centum of the gross tonnage of commodities (computed separately for dry bulk carriers, dry cargo liners, and tankers) financed shall be transported on privately owned U.S.-flag commercial vessels to the extent that such vessels are available at fair and reasonable rates.	Yes
7. FAA Sec. 621. If technical assistance is financed, will such assistance be furnished to the fullest extent practicable as goods and professional and other services from private enterprise on a contract basis? If the	Yes;Yes

Annex A
Exhibit 4.11

A.7.

facilities of other Federal agencies will be utilized, are they paritcularly suitable, not competitive with private enterprise, and made available without undue interference with domestic programs?

8. International Air Transport. Fair Competitive Practices Act, 1974. If air transportation of persons or property is financed on grant basis, will provision be made that U.S.-flag carriers will be utilized to the extent such service is available? — Yes

9. FY 79 App. Act Sec. 105. Does the contract for procurement contain a provision authorizing the termination of such contract for the convenience of the United States? — Yes

B. Construction

1. FAA Sec. 601(d). If a capital (e.g., construction) project, are engineering and professional services of U.S. firms and their affiliates to be used to the maximum extent consistent with the national interest? — NA

2. FAA Sec. 611(c). If contracts for construction are to be financed, will they be let on a competitive basis to maximum extent practicable? — Yes

3. FAA Sec. 620(k). If for construction of productive enterprise, will aggregate value of assistance to be furnished by the United States not exceed $100 million? — NA

C. Other Restrictions

1. FAA Sec. 122 (e). If development loan, is interest rate at least 2% per annum durinr grace period and at least 3% per annum thereafter? — NA

2. FAA Sec. 301(d). If fund is established solely by U.S. contributions and administered by an international organization, does Comptroller General have audit rights? — NA

3. FAA Sec. 620(h). Do arrangements preclude promoting or assisting the foriegn aid projects or activities of Communist-bloc countries, contrary to the best interests of the United States? — Yes

4. FAA Sec. 636(i). Is financing not permitted to be used, without waiver, for purchase, long-term lease, or exchange of motor vehicle manufactured outside the United States, or guaranty of such transaction? — Yes

Annex A
Exhibit 4.12

C.

5. Will arrangements preclude use of financing:

a. FAA Sec. 104(f). To pay for performance of abortions or to motivate or coerce persons to practice abortions, to pay for performance of involuntary sterilization, or to coerce or provide financial incentive to any person to undergo sterilization?	Yes
b. FAA Sec. 620(g). To compensate owners for expropriated nationalized property?	Yes
c. FAA Sec. 660. To finance police training or other law enforcement assistance, except for narcotics programs?	Yes
d. FAA Sec. 662. For CIA activities?	Yes
e. FY 79 App. Act Sec. 104. To pay pensions, etc., for military personnel?	Yes
f. FY 79 App. Act Sec. 106. To pay U.N. assessments?	Yes
g. FY 79 App. Act Sec. 107. To carry out provisions of FAA sections 209(d) and 251(h)? (Transfer of FAA funds to multilateral organizations for lending.)	Yes
h. FY 79 App. Act Sec. 112. To finance the export of nuclear equipment, fuel, or technology or to train foreign nations in nuclear fields?	Yes
i. FY 79 App. Act Sec. 601. To be used for publicity on propaganda purposes within United States not authorized by the Congress?	Yes

BEST AVAILABLE DOCUMENT

Annex A
Exhibit 5

JUN 11 1981

ANNEX A
EXHIBIT 5

AMERICAN EMBASSY, PORT AU PRINCE

UNCLASSIFIED

VV ESA129BRA166
RR RUESPR
DE RUENC 1319/01 1610608
ZNR UUUUU ZZH
R 120555Z JUN 81
FM SECSTATE WASHDC
TO AMEMBASSY PORT AU PRINCE 4115
BT
UNCLAS STATE 151310

ADM AID

E.O. 12065: N/A

TAGS:

SUBJECT: DAEC REVIEW OF FAMILY PLANNING OUTREACH PID
1. SUMMARY: DAEC REVIEW OF SUBJECT PID HELD MAY 2, 1981. APPROVAL IS GRANTED TO PROCEED TO INTATIVE REVIEW. IN DEVELOPING PROJECT PAPER, BUREAU REQUESTS THAT FOLLOWING CONCERNS BE ADDRESSED:

-- A. DEMAND FOR FAMILY PLANNING SERVICES: PID ASSUMES HAITIANS WILL AVAIL THEMSELVES OF FAMILY PLANNING SERVICES OFFERED UNDER PROJECT. WHILE SOME ADDITIONAL DEMAND WILL LIKELY BE GENERATED BY THE VARIOUS PROJECT ACTIVITIES, MISSION SHOULD UNDERTAKE A DEMAND STUDY DURING INTENSIVE REVIEW TO ASCERTAIN NATURE AND LEVEL OF DEMAND FOR FAMILY PLANNING SERVICES CONTEMPLATED UNDER PROJECT, AND REPORT RESULTS IN PP.

Done 6/12/81

-- B. INTEGRATION OF HEALTH DELIVERY SYSTEMS: REPORTS ON HAITI'S PUBLIC HEALTH SYSTEM HAVE CRITICIZED OVERLAPPING FUNCTIONS OF THE VARIOUS ORGANIZATIONS COMPRISING PUBLIC HEALTH SECTOR. UNDER THE RURAL HEALTH DELIVERY SYSTEM GRANT AGREEMENT, A CONDITION PRECEDENT TO DISBURSEMENT CALLS FOR PLANS AND SCHEDULES FOR

INTEGRATING, INTER ALIA, THE DIVISION OF FAMILY HYGIENE (DHF) ADMINISTERED MATERNAL/CHILD AND FAMILY PLANNING PROGRAM INTO THE MINISTRY OF HEALTH AND POPULATION (DSPP) HEALTH SYSTEM. PP SHOULD INDICATE STATUS OF COMPLIANCE WITH THIS CONDITION PRECEDENT AND EXPLAIN THE ROLES OF DHF AND DSPP, OVER TIME, IN MANAGING AND/OR SUPPORTING EACH OF THE PROJECT ACTIVITIES.

-- C. PROJECT FUNDING: THE FOLLOWING FUNDING QUESTIONS SHOULD BE EXAMINED DURING PP DEVELOPMENT:

--- (1) UNFPA: IMPLICATIONS OF A PROBABLE REDUCTION IN PLANNED UNFPA CONTRIBUTIONS TO THE PROJECT SHOULD BE EXAMINED AND APPROPRIATE STRATEGIES DEVELOPED FOR ASSURING ADEQUATE PROJECT FUNDING SHOULD UNFPA SUPPORT BE REDUCED.

--- (2) GOH AND AID: (A) THE PID PROPOSES AN AID-FUNDED SALARY PHASE-OUT PLAN EXTENDING BEYOND THE IMPLEMENTATION PERIOD. AID, OF COURSE, CAN AND WILL MAKE NO COMMITMENT REGARDING FUNDING BEYOND THE PROJECT. PP SHOULD REFLECT THIS FACT. ON THE OTHER HAND, PROJECTED ANNUAL INCREASE IN GOH FUNDING APPEARS OVERLY MODEST. SINCE GOH HAS RECENTLY INDICATED PARTICULAR INTEREST IN FAMILY PLANNING ACTIVITIES, MISSION SHOULD ATTEMPT TO NEGOTIATE AN INCREASED GOH ASSUMPTION RATE AND AID PHASE-OUT RATE TO PERMIT A [illegible] FULL FUNDING OF SALARIES AT END OF PROJECT'S IMPLEMENTATION PERIOD.

---- (B) CONSIDERING DIFFICULTIES ENCOUNTERED IN HAVING GOH MEET ITS COUNTERPART INCOUNTERPARTS UNDER SEVERAL OTHER AID-SUPPORTED PROJECTS, [illegible]

U.S. AID ROUTER
OFFICE ACT INFO
PD
OF
PAM
PD
AID
DIRT
EXO
FFP
GTD
CONT
ENG
ADO
FHO
FFP
EP
CP
ACTION TAKEN
DATE:
BY:

BEST AVAILABLE DOCUMENT

UNCLASSIFIED

GIVE PARTICULAR EMPHASIS TO ASSURING GOH COMMITMENT T FUNDING ITS SHARE OF THIS PROJECT'S ACTIVITIES. SINC SOME EVIDENCE SUGGESTS GOH COMMITMENT GREATER FOR LOAN-FUNDED PROJECTS, MISSION MAY WISH TO EXPLORE WITH GOH POSSIBILITY OF LOAN-FUNDING PORTIONS OF PROJECT.

-- D. INSTITUTIONAL CAPACITY OF DHF: THE PID INDICATES DHF WILL SUPERVISE AND PROMOTE SEVERAL BASIC PLANNING ACTIVITIES SIMULTANEOUSLY IN ADDITION TO THEIR CURRENT RESPONSIBILITIES IN CONTEXT OF INCREASED DHF ADMINISTRATIVE CAPABILITIES DURING INTENSIVE PHASE. MISSION SHOULD CONSIDER POSSIBILITIES FOR USING PRIVATE SECTOR ENTITIES TO MANAGE OR PROMOTE ONE OR MORE OF THE PLANNED ACTIVITIES TO MINIMIZE ADDITIONAL ADMINISTRATIVE BURDENS ON DHF. IN ANY EVENT, MISSION SHOULD CAREFULLY

ASSESS CAPABILITIES OF DHF FOR CARRYING OUT ITS RESPONSIBILITIES UNDER PROJECT.

-- E. PROPOSED GRANTS AND CONTRACTS: (1) REGARDING THE SPECIAL GRANTS AND CONTRACTS CONTEMPLATED UNDER PROJECT, PP SHOULD FULLY DESCRIBE THE NATURE AND SCOPE OF THESE FINANCIAL ARRANGEMENTS, INCLUDING WHO WILL BE THE GRANTEES OR CONTRACTING ENTITIES, WHAT INSTRUMENTS (E.G., GRANT AGREEMENT BETWEEN WHOM, COOPERATIVE AGREEMENT BETWEEN WHOM) WILL BE UTILIZED AND PROCEDURES INVOLVED IN NEGOTIATING AND ADMINISTERING THEM; (2) WITH REFERENCE TO DOLS 1 MILLION IN GRANTS PROPOSED TO FUND PROVISION OF VOLUNTARY STERILIZATION SERVICES, DETAILS OF GRANT ARRANGEMENTS MUST ASSURE THAT GRANTS WILL, IN FACT, FUND TIME AND ACTIVITIES ADDITIONAL TO THE TIME AND ACTIVITIES THAT WOULD OTHERWISE BE PROVIDED IN ABSENCE OF GRANTS; (3) WITH SPECIFIC REFERENCE TO THE PROPOSED INCENTIVE GRANTS TO COMMUNITY COUNCILS, BUREAU SKEPTICAL AS TO NEED FOR SUCH GRANTS TO STIMULATE COMMUNITY INTEREST IN FAMILY PLANNING ACTIVITIES AND QUESTIONS APPROPRIATENESS OF USING SECTION 104 HEALTH MONEY FOR SOME OF THE COMMUNITY DEVELOPMENT PROJECTS DISCUSSED AT DAEC. MOREOVER, DHF CAPACITY FOR ADEQUATELY SUPERVISING SUCH AN ACTIVITY IS

QUESTIONABLE. ACCORDINGLY, IF MISSION ELECTS TO INCLUDE THIS ACTIVITY IN FINAL PROJECT DESIGN, ADEQUATE RESPONSE TO ALL OF BUREAU'S CONCERNS WILL BE NECESSARY TO SECURE APPROVAL; (4) PROPOSED GRANTS TO U.S. VOLUNTARY GROUPS WILL HAVE TO BE SUPPORTED BY ADEQUATE SCOPES OF WORK AND COST ESTIMATES IN PROJECT PAPER. IF THESE ARE NOT YET DEVELOPED WHEN PROJECT PAPER IS OTHERWISE READY, MISSION MIGHT WISH TO SEEK AUTHORIZATION FOR THESE GRANTS SEPARATELY, AT A LATER DATE, E.G., IN THE FORM OF AN AMENDMENT TO THE PROJECT.

3. ROLE OF MILITARY: MISSION IS REQUESTED TO INCLUDE IN PP A PARAGRAPH OR TWO DESCRIBING ROLE OF MILITARY IN FAMILY PLANNING ACTIVITIES, ESPECIALLY RELATING TO ANY REAL OR PERCEIVED COERCION WITH RESPECT TO RECRUITMENT OF CONTRACEPTIVE ACCEPTORS.

4. DURATION OF PID APPROVAL: APPROVAL OF THE PID AND AUTHORITY TO DEVELOP THE PROJECT REMAIN VALID FOR ONE YEAR. SHOULD PROJECT NOT BE DEVELOPED WITHIN THAT PERIOD, BUREAU WOULD WANT TO REVALIDATE THE PID APPROVAL THROUGH AN EXCHANGE OF CABLES, A REVISED PID OR INTERIM REPORT.

5. BUREAU PREPARED TO PROVIDE TDY ASSISTANCE REQUESTED IN PID. HAIG
BT

BEST AVAILABLE DOCUMENT

UNCLASSIFIED

UNITED STATES INTERNATIONAL DEVELOPMENT COOPERATION AGENCY
AGENCY FOR INTERNATIONAL DEVELOPMENT
WASHINGTON D.C. 20523

LAC/DR-IEE-81-7

ENVIRONMENTAL THRESHOLD DECISION

Project Location	:	Haiti
Project Title and Number	:	Family Planning Outreach 521-0124
Funding	:	$ 853,000 - FY 81 $10,760,000 - FY 81-85)
Life of Project	:	Five years (FY 81-85)
IEE Prepared by	:	Maura Brackett, LAC/DR
Recommended Threshold Decision	:	Negative Determination
Bureau Threshold Decision	:	Concurrence with Mission recommendation

Action

1) Copy to USAID/Haiti
Allan R. Furman

2) Copy to Maura Brackett

3) Copy to IEE file

Robert O Otto Date 12 May 81

Robert O. Otto
Chief Environmental Officer
Bureau for Latin America
and the Caribbean

ANNEX A

INITIAL ENVIRONMENTAL EXAMINATION

A.

Project Location	: USAID/Haiti	
Project Title	: Family Planning Outreach	
Funding (FY and Amount)	$ 853,000	FY 81
	$ 10,760,000	FY 81-85
Life of Project	: Five years (FY 81-85)	
IEE Prepared by	: Maura Brackett LAC/DR	
Date	: December 12, 1980	

Environmental Action Recommended:

That this project receive a negative determination and that no additional environmental examinations be carried out in respect to it.

Mission Director's Concurrence : Allan R. Furman

Allan R. Furman

Assistant Administrator's Decision: Approved:_____

Disapproved:_____

Date:_____

Description of the Project:

The overall goal of this project is to improve the health, social and economic status of the Haitian population by expanding the availability of family planning information and services.

This will be accomplished by strengthening and expanding the institutional basis for both the urban and rural based programs. Support will be primarily directed to the government Ministry of Public Health and Population and its Division of Family Hygiene, which has legal responsibility for coordination of all elements of the national family planning program. Support will provide for expansion of facility based outlets as well as innovative community outreach systems, tapping existing systems such as market women. Contraceptive availability will be increased both as a result of the delivery system expansion, including a commercial retail sales program reaching out pharmacies and stores, as well as inclusion of a range of contraceptives (pill, condom, neo-sampoon, IUD) previously not available through the GOH delivery system. Commercial distribution will also include basic health medicaments, an approach tested under the Columbia University operations research pilot project in Leogane. Other donors are expected to supply the health medicaments, whereas AID will fund the marketing survey, advertising and promotional aspects of this program. Another major element in the program is assistance to the GOH to develop a comprehensive population plan which should directly result in a more vigorous family planning program and which indirectly should bring population impact considerations to the attention of planners in all major sectors of Haitian society.

Specific AID provided project inputs include funds for commodities (primarily contraceptives including surgical contraceptive equipment and support), personnel (technical assistance and local support for salaries), participant training and a variety of specifically targetted activities and pro-rams (information and logistic management systems, mass media education, social science research particularly with respect to community involvement).

C. Identification and Evaluation of Environmental Impacts:

This project will have no deleterious effects on the environment. In fact, this project will have a positive impact in that it seeks to promote adoption of policies designed to bring to the attention of GOH planners the growing problem of the ratio of human beings to national resources which already has resulted in the exhaustion of arable land and serious erosion.

From a cultural viewpoint, recent data suggest that the program responds to an unmet demand for family planning information and services and basic health medicaments. The 1977 Haitian Fertility Survey figures indicate high motivation among Haitians to regulate their fertility despite low levels of socio-economic development and a national family planning program which does not yet reach many rural areas. Pilot operations research projects under the Columbia University project have demonstrated the efficiency of providing contraceptives and basic health medicaments in terms of significant declines in pregnancy prevalence and improved health status. Community

action to reduce population growth in recognition of demographic pressure on the environment should have a positive spill over effect on concern for the community and its resources. Over a 10 to 20 year period reduction in population growth rates will have positive effects on the local economy and employment.

We conclude that this project will have no negative impact on the environment and that no further environmental impact analysis is required. A negative determination is, therefore, recommended.

ANNEX B

AID 1020-29 (1-78)

PROJECT DESIGN SUMMARY
LOGICAL FRAMEWORK

INSTRUCTION: THIS IS AN OPTIONAL FORM WHICH CAN BE USED AS AN AID TO ORGANIZING DATA FOR THE PAR REPORT. IT NEED NOT BE RETAINED OR SUBMITTED.)

Project Title & Number: Family Planning Outreach 521-0124

Life of Project:
From FY 1981 to FY 1985
Total U.S. Funding $11,770,000
Date Prepared: 8/19/81

PAGE 1

NARRATIVE SUMMARY	OBJECTIVELY VERIFIABLE INDICATORS	MEANS OF VERIFICATION	IMPORTANT ASSUMPTIONS
Program or Sector Goal: The broader objective to which this project contributes: (A-1) To improve health and social/economic welfare of poor Haitians	**Measures of Goal Achievement:** (A-2) - Reduction in completed family size; - Reduction in maternal, infant, child mortality; - Reductions in age-specific fertility particularly in women over 35; - Increases in active family planning users and higher continuation rares.	(A-3) Health service statistics Multi-Round Household Surveys. Epidemiologic Surveillance Contraceptive Prevalence Surveys in 1982 and 1984; National Census in 1982.	**Assumptions for achieving goal targets:** (A-4) 1. External funding and support continue at curre planned levels. 2. GOH recognizes population growth as problem and develops/implements appropriate policies and programs. 3. MCH/FP services and contraceptive use are positively related to reductions in mortality and morbidity among women and children. 4. GOH will increase its commitment of funds and staff to sustain an effecitve national FP program. 5. Haitians will avail themselves of FP and basic health services.

AID 1020-25 (3-72)
SUPPLEMENT 1

PROJECT DESIGN SUMMARY
LOGICAL FRAMEWORK

Life of Project:
From FY 1981 to FY 1985
Total U.S. Funding $11,770,000
Date Prepared: 8/19/81

ANNEX B

Project Title & Number: Family Planning Outreach - 521-0124

PAGE 2

NARRATIVE SUMMARY	OBJECTIVELY VERIFIABLE INDICATORS	MEANS OF VERIFICATION	IMPORTANT ASSUMPTIONS
Project Purpose: (B-1) To assist the Haitian Government to establish a cost-effective national family planning program by: 1. improving program management; 2. improving quality/quantity of MCH/FP services available; 3. expanding community support/participation in MCH/FP by enlisting private, voluntary and non-health sector agencies and groups; 4. increasing commercial availability of contraceptives at reasonable prices; 5. designing/articulating appropriate population/fp policies and programs.	**Conditions that will indicate purpose has been achieved: End-of-Project status. (B-2)** 1)All DSPP+ 75% of private facilities provide MCH/FP services. 2) Tested integrated service models will be serving 60% of the population. 3) Contraceptives and basic drugs will be available at reasonable prices throughout Haiti. 4) 25% of target population continuing users of effective FP methods. 5) Program management control and surveillance system in place and functioning. 6) Evaluation/operations research is continuing program activity. 7) Impact of population growth on development has been studied and policies are being developed. 8) GOH is providing substantial support for on-going FP activities. 9) Program applies cost criteria in analyzing scope and reach of program options or service alternatives.	**(B-3)** Surveys of users. Service Statistics. EOP Impact Analysis. Quarterly, semi-annual/annual reports.	**Assumptions for achieving purpose: (B-4)** 1. GOH/DSPP will provide increasing support and priority for MCH/FP services. 2. Cost effective service models are tested and effectife in regional/national applications. 3. Subsidized commercial resupply of contraceptives and basic medicines is viable for consumer and GOH. 4. Health services management improves so that basic drugs and supplies are available in all DSPP Facilities. 5. Better training and supervision will improve quality of services. 6. Haitians will value FP and become satisfied users when quality services are available. 7. RHDS plans for community pharmacies and basic drug availability in rural areas are implemented. 8. Operations research demonstrates viable and cost effective additional or alternative service delivery mechanisms.

AID 1020-25 (11-72)
SUPPLEMENT 1

PROJECT DESIGN SUMMARY
LOGICAL FRAMEWORK

Life of Project:
From FY 1981 to FY 1985
Total U.S. Funding
Date Prepared:

Project Title & Number: Family Planning Outreach - 521-0124

NARRATIVE SUMMARY	OBJECTIVELY VERIFIABLE INDICATORS	MEANS OF VERIFICATION	IMPORTANT ASSUMPTIONS
Project Outputs: (C-1)	Magnitude of Outputs: (C-2)	(C-3)	Assumptions for achieving outputs: (C-4)
Health staff trained in FP	80% of those working in rural health or MCH/FP.	Quarterly annual/semiannual reports of activities.	1. Haitian private sector and community groups will support program.
FP services available in all DSPP facilities . Contraceptives available in community level . Manuals and service guides updated.	100% of DSPP facilities and 75% of private health facilities.	Financial reports.	2. Health personnel will be available for FP training.
Prenatal/post natal counselling in FP.	80% of pregnant women receive counselling.		3. Haitians can be motivated and will participate in programs.
Improved management/Program surveillance system in place, key personnel trained in management.	Regular supply/service reports are available.		4. Services support system can be strengthened.
Small operations research studies are completed.	15 Management seminars held over LOP.		5. Contraceptive retail sales program can be organized and Haitians will buy at reasonable prices.
Commercial sales plan developed and implemented.	4 Studies per year.		6. Other GOH service organizations will support national program.
Info/Education program designed and implemented.			
Private groups ± Community Councils recruited and participate in program: -Community volunteers trained -Community outreach mini grants system developed and tested.	50% of private groups by end of 600 community councils 1200 volunteers trained 100 community councils are involved in private voluntary outreach program.		
Population impact analyses completed: -Leadership seminars -Pop addressed in GOH planning documents.			
Strengthening of logistical system			
Demography trainees return and are engaged in pop policy studies.	5 trainees.		

AID 1020-25 (1-73)
SUPPLEMENT 1

PROJECT DESIGN SUMMARY
LOGICAL FRAMEWORK

Project Title & Number: Family Planning Outreach - Project 521-0124

Life of Project:
From FY 1981 to FY 1985
Total U.S. Funding $11,770,000
Date Prepared: 8/19/81

NARRATIVE SUMMARY Project Inputs: (D-1)	OBJECTIVELY VERIFIABLE INDICATORS Implementation Target (Type and Quantity) (D-2)	MEANS OF VERIFICATION (D-3)	IMPORTANT ASSUMPTIONS Assumptions for providing inputs: (D-4)
A. U.S. Contributions	Life of project Amounts ($000)	Management reports Service Statistics Procurement records Financial reports	AID funds will be available when needed. UNFPA will be able to support project at modified levels. GOH will provide funds and staff necessary to implement project.
Medical Supplies	$ 368		
Equipment/Renovation	235		
Training	452		
Short-term Consultants	424		
Services Contracts	1,045		
Evaluation/Operations Research	255		
Local Salaries	893		
Transport/Per Diem	341		
Allowances/Fees	668		
Contraceptives	6,000		
Contingency	411		
Total	$11,770 1/		
B. GOH Contributions			
1)DSPP			
Direct Salaries	$ 1,573		
Operating Expenses	185		
DSPP In-Kind	2,203		
Sub-total DSPP	3,961		
2)Other In-Kind	2,594		
Total	$ 6,555		
C. Other Donors (UNFPA)			
Contraceptives	$ 60		
Equipment/drugs	400		
Training In-country	200		
Foreign Training	50		
Salary Support	500		
Operating Expenses	525		
IEC	75		
	$ 1,810		

1/Initial authorization limited to $9,615,000. Subsequent authorization for both the pilot testing and national expansion phases of the commercial contraceptive retail sales component may be approved upon submission of detailed implementation plans.

ANNEX C 1.a

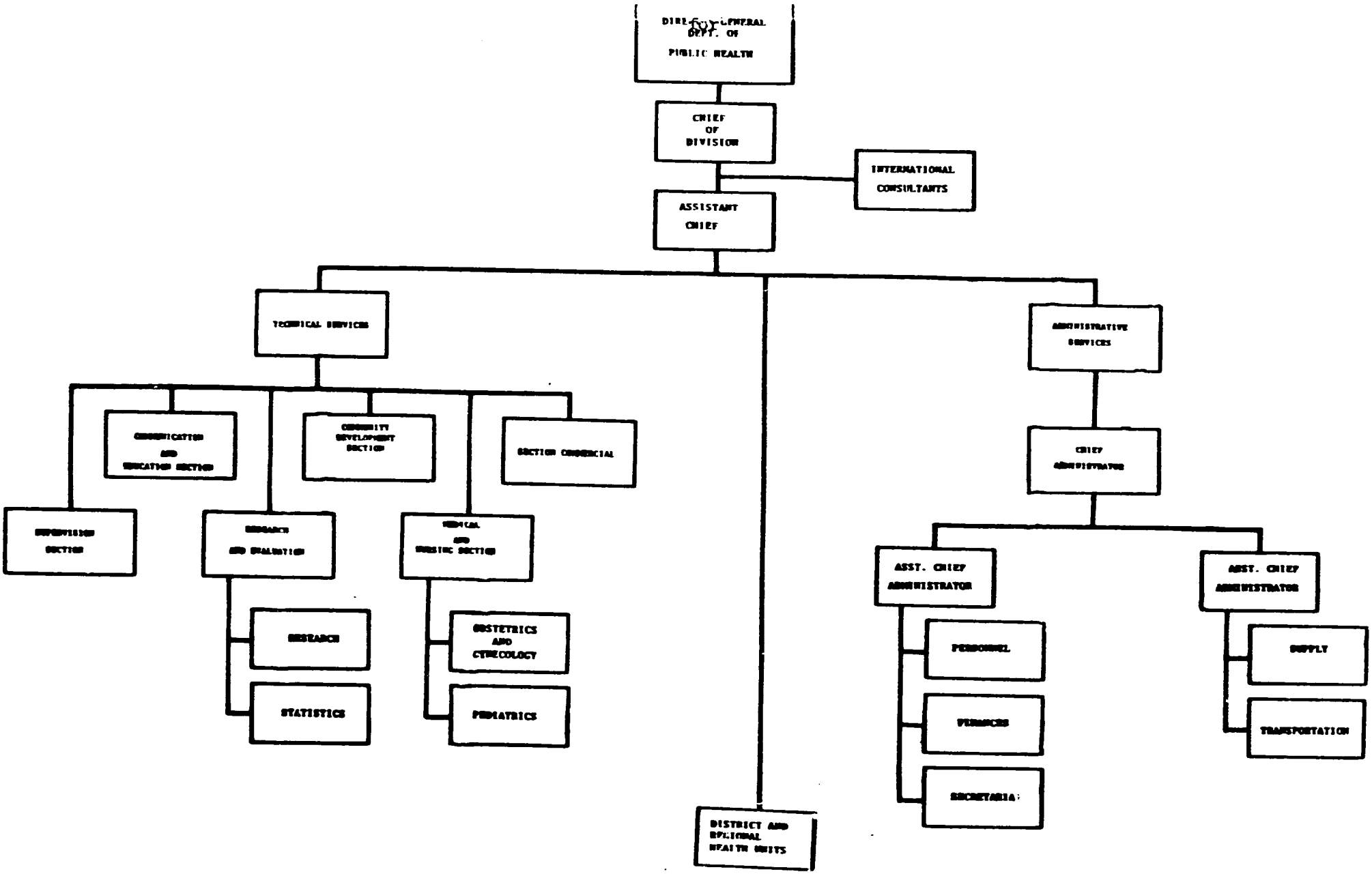

PRESENT ORGANIZATION OF DIVISION OF FAMILY HYGIENE

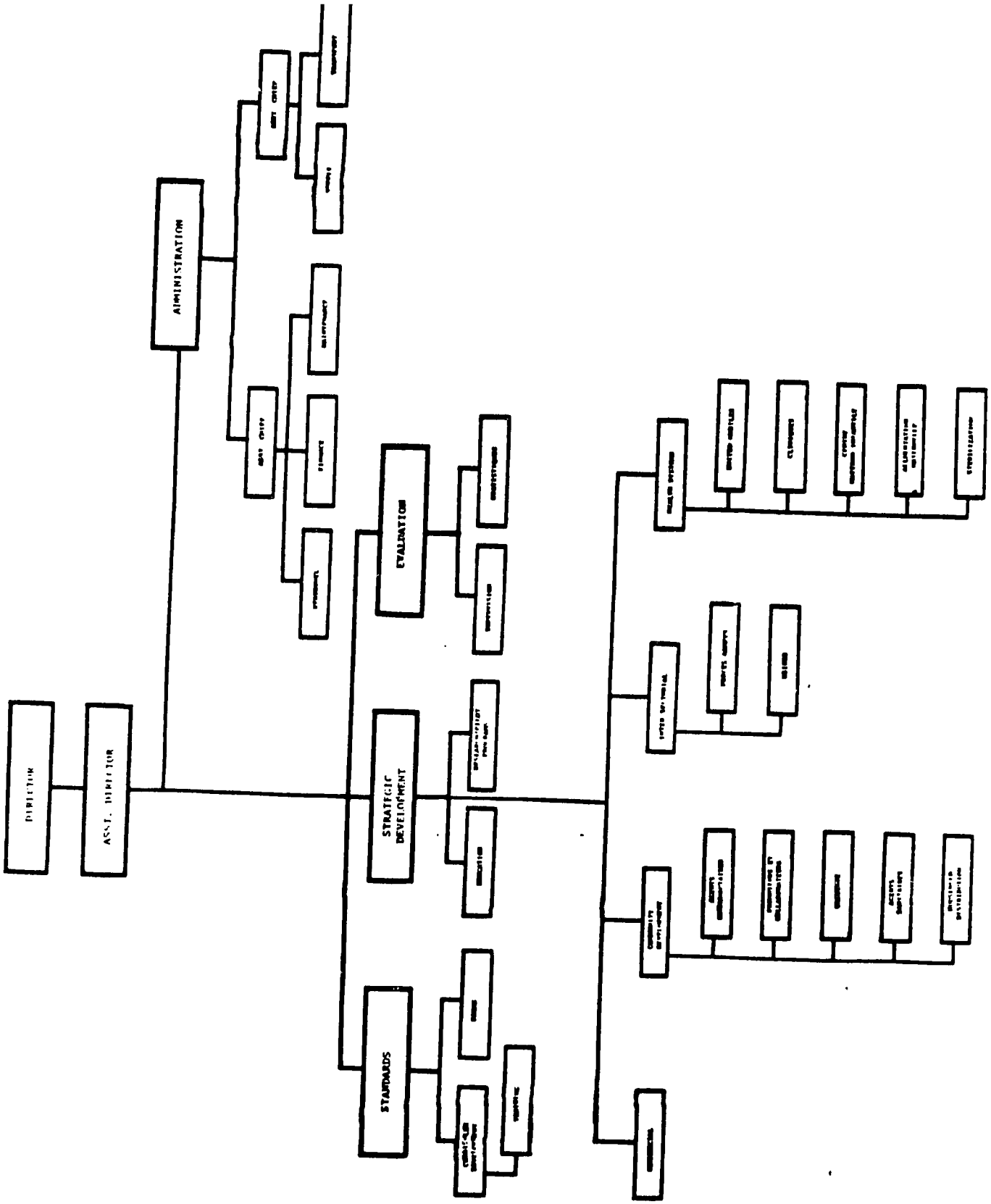

PROPOSED REORGANIZATION OF THE DIVISION
OF FAMILY HYGIENE

MEN AND WOMEN RECRUITED FOR FAMILY PLANNING

BY THE DHF COMMUNITY DEVELOPMENT SECTION

ACTIVITIES BY PROGRAM IN 1980

Program	Men	Women	Total
Intensive Agricultural Development Zones	26	54	80
Cock Fight Arenas	343	-	343
Coffee Cooperatives	-	-	-
Women's Group (CHREPROF)	30	18	48
Community Action Councils	16,993	9,477	26,470

Source:

Community Development Section, DHF

COMMUNITY ACTION COUNCIL PROGRAM RESULTS IN 1980

Total Population Represented	194,000
Community Councils Recruited	194
Community Volunteers Trained	387
Home Visits	1,279
Group Meetings	268
Prenatal Referrals	1,358
Children Referred	885
Total New Acceptors	9,477
New Women Acceptors	3,554
Pills	2,041
Foam	1,199
Condom	179
Other	135
New Men Acceptors	5,845
Total FP Users	26,470
Men Users	16,993
Women Users	9,477

Source:

Community Development Section, DHF

Exhibit 1

NEW FAMILY PLANNING ACCEPTORS BY SEX 1973-1980

Year	Both Sexes	Women	Men
1973	5007	4295	712
1974	5789	5022	767
1975	25292	15563	9729
1976	43047	16066	26981
1977	58341	20059	38282
1978	67463	24141	43322
1979	105296	33709	71587
1980	92843	33776	59067
Cumul	403078	152631	250447

Source: Statistics Section DHF

Exhibit 2

CONTRACEPTIVE METHOD PREFERENCES BY NEW WOMEN FP ACCEPTORS 1974-1980
(As Reported to the DHF)

Year	IUD	Pills	Foam	Condom	Others	VSC
1974	10%	32%	22%	32%	4%	-
1975	9%	41%	20%	13%	17%	1
1976	9%	53%	24%	13%	1%	35
1977	5%	57%	13%	22%	3%	118
1978	5%	67%	14%	14%	1%	117
1979	3%	75%	12%	10%	1%	238
1980	1%	75%	11%	10%	2%	624

Source: Statistics Section, DHF

Exhibit 3

NUMBER OF COUPLES FOLLOWING THE SYMPTOTHERMIQUE METHOD, 1980

Region	Couples	Année 1980
Sud	313	
Cap-Haitien	700	
Port-de-Paix	796	
Gonaives	1370	
Hinche	786	
Port-au-Prince	72	
Total	4037	

Source: Statistics Section DHF

Exhibit 4

AGE AND PARITY OF WOMEN AT FIRST FP VISIT, 1980

Group Age	Total	No Children	1-2	3-4	5-6	7+	Not Stated
Total	34242	221	3596	1905	651	265	27604
Less than 20	432	49	334	15	-	-	34
20-29	4448	130	2807	1126	163	26	196
30-29	1629	29	376	652	359	130	83
Over 40	223	3	23	51	69	62	15
Not Stated	27510	10	56	61	60	47	27276

Source: Statistics Section, DHF

PROJECT PL 480 TITLE I AVAILABILITIES FOR DHF ACTIVITIES AND PROPOSED DISBURSEMENT OVER LIFE OF PROJECT

	1982	1983	1984	1985	Life of Project
Projected Expenditures from Title I	$ 240,000	$ 280,000	$ 320,000	$ 320,000	$ 1,160.000
Salaries	229,006	243,750	284,311	291,547	1,048,614
DHF Operating Costs	10,994	36,250	35,689	15,203	111,386
Institutional Reimburse(VSC)	-	-	-	13,250	

GOH CONTRIBUTIONS TO DHF SALARIES 1981

Salary Category	1981 ¢ Monthly	1981 ¢ Annual
a. Base Salaries (Supplemented by AID) - 13 mo.	8,706	113,178
b. Base Salary (Supplemented by UNFPA) - 13 mo	14,025	182,325
c. Supplement for Matron Training (526-G) - 12 mo.	200	2,400
d. Base GOH to Full GOH in 1982 (Emp. # 74,82-87, 89-91, 123-127, 143-148) - 13 mo.	4,853	63,089
e. Base/Full GOH - 911G(Title I) - 13 mo.	12,300	147,600
Total GOH Salary Support	¢40,084	¢508,592
U.S. $ Equivalent	$8,017	$101,718

DETAILED PRESENTATION OF PLANNED INCREMENTS FOR GOH PAYMENT OF DHF STAFF SALARIES

	Pre-Project	Project 521-0124 Implementation Period					
	1981 US $	1982 US $	1983 US $	1984 US $	1985 US$	Life of Project	Notes
Continuing GOH Salary Support	$72,198	$ 72,198	$ 83,028	$ 91,330	$ 91,330	$ 524,769	
(15% increase in FY 83)							
(10% increase in FY 84)						$ 337,866	
Additional Salary Phase Over							
1983 - 8 persons	-	-	$ 33,862	$ 37,298	$ 37,248	$ 108,358	Empl. # 35,39,50,59,60,61,80,17
1984 - 8 persons	-	-	-	30,670	30,670	61,340	Empl. # 36,37,53,57,58,63,72,285
1985 - 4 persons	-	-	-	-	17,185	17,185	Empl. # 18,73,286,287
Title I Funded Salaries	$29,520	$ 229,006	$ 243,750	$ 284,311	$ 291,547	$1,048,614	
Food Prog. and Matrone Training (plus 10% in 1983, 1984)	$29,520	$ 29,520	$ 33,948	$ 37,343	$ 37,343		
Agent Communautaire (125 persons) (plus 15% in 1982) (plus 10% in 1984)	-	155,727	155,727	155,727	176,960	176,960	Salaries Increased 15% in 1983 10% in 1984
Drivers - 82(2)	-	3,588	3,588	3,947	3,947		
2 Drivers - Soc Work Sup.	-	-	10,316	11,348	11,348		
2 Drivers - 2 Soc. Workers	-	-	-	10,525	10,525		
2 Drivers - 1 Soc. Worker	-	-	-	-	7,236		
Emp. # 74,82-87, 123-127 143-148 (21 persons)	-	$ 40,171	$ 40,171	$ 44,188	$ 44,188		
Total GOH Salaries	-	$ 301,204	$360,640	$ 443,559	$467,980	$1,573,383	

AID INPUTS FOR DHF PERSONNEL BY SUB-PURPOSE AND YEAR

	FY 82	FY 83	FY 84	FY 85	LOP Total
Management	$ 97,579	$ 69,211	$ 62,153	$55,164	$284,107
Services+	68.112	57,086	45,939	41,335	212,472
Community	76,155	71,371	77,193	75,877	300,596
CRS*	35,191	35,191	18,665	7 153	96,200
Total	$277,037	$232,859	$203,950	$179,529	$893,375

+ = Calculated as residual

* = Extra funds allocated to insure adequate incentive for Sales Program Manager ($10,000/year) which may be put in sales management contract.

ANNEX E

BACKGROUND NOTES ON ECONOMIC ANALYSIS OF PROJECT

1. Couple-Years of Protection (CYP)

The projected distribution of contraceptives and contraceptive services during the life of the project, in total and separately by subpurpose, is shown in the upper panel of Table E-1. These figures are taken here as given, and all analyses below involving costs are based on them. By starting directly with contraceptive distribution, questions concerning the necessary number of new and continuing acceptors and continuation rates are by passed (although these parameters could be calculated working backwards from the distribution figures).

The lower panel of Table E-1 shows the CYP separately for each method (and by subpurpose), as well as the CYP index (Totals). As indicated in the notes to the table, distribution of 200 condoms, 20 cycles of pills, and 160 foam tablets all areassumed to provide 1 CYP. If the annual frequency of intercourse is assumed to be 100, this is equivalent to assuming wastage or discontinuation rates equivalent to 50 percent for condoms, 35 percent for pills, and 37.5 percent for faam tablets, respectively. These wastage rates are admittedly arbitrary: good program management and efficient service delivery could result in lower wastage rates and hence greater CYP, while poor management and inefficient delivery would result in higher rates. Follow-up interviews with new and continuing acceptors about continuation rates should be a part of the on-going evaluation efforts associated with implementation of the project.

TABLE E - 1

Projected Contraceptive Distribution
and Couple-Years of Protection (CYP),
by Contraceptive Method and Subpurpose

Projected Contraceptive Distribution (000)

	CRS	Community	Services	Total
Condoms	6,750	23,625	41,250	71,625
Pills	2,275	954	880	4,109
Neo Sampoon	2,735	0	0	2,735
IUDs	0	0	8.1	8.1
VSC	0	0	16.8	16.8

Projected Couple-Years of Protection

Condoms	33,750	118,125	206,250	358,125
Pills	113,750	47,700	44,000	205,450
Neo Sampoon	17,090	0	0	17,090
IUDs	0	0	7,100	7,100
VSCs	0	0	36,000	36,000
Totals	164,590	165,825	293,350	623,765

Note: CYP are calculated from the Projected Distribution figures on the following basis: 1 CYP 200 condoms 20 cycles of pills 160 foam tablets. An IUD insertion is assumed equal to 3 CYP, while a VSC is assumed to provide 1 CYP for each year of exposure during the life of the project. Hence, CYP for IUDs and VSCs reflect the timing as well as the amount of provision of these contraceptive services. In addition, reflecting the conservative approach that has been attempted here, the continuing contraceptive protection from IUDs and VSCs after the project (to over 5,000 and nearly 17,000 women, respectively) is not included in the CYP index. This will tend to understate slightly the number of births averted and hence overstate the cost per birth averted.

2. Births Averted

On the basis of the CYP by method shown in Table E-1, births averted have been calculated and are presented in Table E-2. Since a couple-year of protection is also a women-year of risk of exposure to pregnancy, it was assumed that in the absence of the contraceptive protection to be provided by the project, projected contraceptive users would bear children at the average rate for women in union in Haiti. It was necessary, in turn, to estimate this in-union fertility rate. As indicated in the notes to the table, this estimate (based on two separate data sources) had to be adjusted to be compatible with the assumed crude birth rate; but the resulting estimate seems quite consistent with other evidence. Given the estimate of 246 births per 1,000 women aged 15-49 and in union, it is estimated that in the absence of contraceptive protection from the program the nearly 624,000 women-years of exposure to the risk of pregnancy would result in more than 153,000 births.

TABLE E-2

Estimated Births Averted, Based on In-Union Fertility Rates and Contraceptive Use - Effectiveness

	Couple-Year of Protection	Expected Number of Births No Protection	Predicted Number of Births with Protection	Births Averted
Condom	358,125	88,099	53,719	34,380
Pill	205,450	50,541	12,327	38,214
Neo-Sampoon & Foam Tablets	17,090	4,204	1,367	2,837
IUD	7,100	1,746	532	1,214
VSC	36,000	8,856	27	8,829
	623,765	153,446	67,972	85,474

Note: Expected Number of Births - No Protection equals Couple-Years of Protection (equivalent to couple-years of exposure to risk of pregnancy) multiplied by an estimated In-union Fertility Rate (births per 1000 women aged 15-49 and in union) of 246. The estimated In-union fertility rate was derived as follows: Data on age-specific fertility rates and the percentage of women in union by age (from the 1977 Haitian Fertility Survey) were used to calculate age-specific in-union fertility rates. Data on the estimated age and sex composition of the population in 1980 (from the Institut Haitien de Statistiques) were then used to estimate the population of women in union and the total number of births, by age group. This yielded an In-union Fertility Rate of 293. However, the number of births inherent in these estimates coupled with the IHS total population figure imply a crude birth rate (CBR) of 44 per thousand, whereas the estimated CBR is 37/1000. Hence, the initial In-union Fertility Rate of 293 was scaled down proportionately to be consistent with a CBR of 37. The resulting estimate of 246 served as the basis for the calculation of expected number of births in the absence of protection.

It should be noted that a cross-check of this figure of 246 births per 1000 women in union indicates that it is reasonably consistent with the data on Total Fertility Rates, average age of entry into union, and percentage of time spent in union since initial entry, reported in James Allman, "Fertility and Family Planning in Haiti", Center for Population and Family Health, Columbia University, 1981.

Predicted Number of Births, with Protection equals Couple-Years of Protection multiplied by 150 percent of Use-Effectiveness (Failure) Rates among U.S. couples intending to prevent future pregnancies (as reported in Robert Hatcher et al, Contraceptive Technology 1980-1981, Irvington Publishers, Inc., New-York 1980. Table 1). Failure rates per 100 women-years of exposures to risk are as follows: condom:10; pills:4; IUD:5; VSC:0.05. Since Neo-Sampoon foam tablets are not available in the U.S., a foam failure rate of 8 is used here, based on a rate of 6.5 for Bangladesh (reported in S.F. Begum et. al, " A Clinical Trial of Neo Sampoon Vaginal Contraceptive Tablets", Contraception 22:6 (Dec. 1980): 573-582) and an average rate of 8 in several developing nations (reported in David Edelman, "Barrier contraception - An update", Advances in Planned Parenthood XIV: 4 (1980) : 144-148.

Contraceptive protection does not in general prevent pregnancies--it lowers the probability that they will occur. Data on contraceptive failure rates provide a basis for estimating the number of births that will take place in the presence of contraceptive protection. Ideally, failure rates should be specific for Haiti; but as in many other cases, such data do not exist. (Again, the obvious implication here is that as part of the evaluation component of this project, a serious effort should be made to generate data on contraceptive failure rates, overall and by subpurpose). Hence, failure rates from other developing nations for Neo Sampoon foam tablets have been used here, while for all other methods it has been arbitrarily assumed (for purposes of these calculations) that failure rates will equal 150 percent of failure rates among U.S. couples intending to prevent future pregnancies. As before, good program management and efficient service delivery could lead to lower failure rates (and hence, more births averted), while poor management and inefficient service delivery could result in higher failure rates.

Multiplying these assumed method-specific failure rates by the corresponding CYP provides the predicted number of births, given the contraceptive protection that is anticipated under the project. The resulting total of nearly 68,000, when subtracted from the no-protection figure of more than 153,000, yields the estimated number of births averted--in excess of 85,000. Given the anticipated CYP, this figure rests on two key parameters: the estimated in-union fertility

rate of 246 per thousand, and the estimated failure rates equal to 150 percent of the failure rate in the U.S.

If the true in-union fertility rate were lower and/or the true failure rates higher, the estimated births averted will be too high. One might argue for lower fertility rates on the grounds that contraceptive users will be more highly motivated to avoid births than in-union women in general, so that even in the absence of the project their fertility would be lower than the in-union average. However, note that this motivation argument would also imply more effective contraceptive with the project use--i.e., lower not higher failure rates. In addition, contraceptive users will be more fecund, on average, than in-union women. On this ground, then, they would be expected to have higher rather than lower than average in-union fertility rates.

In any case, as a form of sensitivity analysis, estimated births averted have been calculated under two alternative scenarios: 1) the in-union fertility rate. of contracepting women would be only 80 percent of the 246/1000 figure used in Table 3 - 2, and 2) failure rates would be 200 percent of U.S. rates rather than 150 percent. In the former case, estimated births averted decline to about 55,000; while the latter scenario implies roughly 63,000 births averted. Under both of these scenarios, the cost per birth averted still remains well below the present value of the net life time consumption stream (i.e., the benefits in the form of consumption expenditures averted exceed the program costs).

Finally, it should be noted that a cross-check of the Table 3-2 estimate of 85,000 births averted was done, based on results from a demographic computer

model, TABRAP* Model simulations for Haiti show the relationship between contraceptive acceptors and crude birth rates, assuming certain contraceptive continuation rates and taking a host of other demographic parameters into account. Since simulations were not performed for this particular project, the guess-work here is even more extensive than that elsewhere in this annex; and project-specific TABRAP simulations could conceivably yield quite different estimates. However, the TABRAP data reported in the 1977 CDC memo suggest a total for births averted quite close to the estimate of 85 thousand generated above. While concensus does not guarantee validity, the similarities of these quite different approaches are encouraging.

3. Illustrative Cost-Benefit Analysis

The first step in the analysis consisted of estimating the life-time consumption and production streams. These estimates are shown in Table E -3. Based on assumed consumption weights by age group and the age distribution of the population, equivalent adult consumption per 100 persons was calculated. Dividing per-capita GNP by this equivalent adult consumption yielded average adult consumption of $328, and multiplying this figure by the consumption weights gave the average consumption figures by age group shown in Panel A of the table. Production was assumed to take place between the ages of 15 and 59, so dividing per-capita GNP by the proportion of the population in this age group yielded

---

* Discussion of the TABRAP model and the simulations referred to in the text may be found in John E. Anderson, "Resource Support Services Report: Project Proposal Paper--Haiti, September 25 - October 1, 1977, Memorandum, Department of Health, Education, and Welfare, Public Health Service, Center for Disease Control, October 26, 1977.

TABLE E - 3

Estimated Lifetime Consumption and Production Streams, assuming Constant Per-capita GNP

A. Consumption

Age Group	Percentage of 1980 Population	Consumption Weight	Equivalent Adult Consumption (Pct.of 1980 Pop. x consumption weight)	Average Annual Consumption
0-4	15	0.25	3.75	$ 82
5-9	13	0.50	6.50	164
10-14	12	0.75	9.00	246
15-59	54	1.0	54.00	328
60+	6	0.50	3.00	164
	100		76.25	

Note: Percentage of 1980 Population Data from Insitut Haitien de Statistiques.
Consumption Weight
Proportions of average adult consumption by age group, as suggested by Warren Robinson and Wayne Schytjer in "Economic Evaluation Procedures for use with Population-Related Projects, January 1980.
Average Annual Consumption
The equivalent adult consumption sum of 76.25 means that for every 100 Haitians (given the consumption weights and current population distribution by age group) there are 76.25 units of average adult consumption. Hence, per-capita GNP of $250 divided by 0.7625 provides average annual adult consumption of $328. Multiplication of this figure by the corresponding consumption weight yields average annual consumption for each age group.

B. Production

Per-capita GNP of $250 is assumed to be produced by the 54 percent of the population aged 15-59. Hence, average annual production per adult equals $250 divided by 0.54, or $463.

C. Net Consumption Stream (ignoring mortality)

Age Group	Annual Consumption	Annual Production	Net Consumption
0-4	$82	$ 0	$ 82
5-9	164	0	164
10-14	246	0	246
15-59	328	463	-135
60+	164	0	164

average production of $463, as shown in Panel B. Subtracting annual consumption from annual production for each age group yields the net consumption stream (Panel C). This stream served as the basis for calculating the present value of averting a birth.

In principle, Gross Domestic Product (GDP) should probably have been used instead of GNP for the calculations, and savings should have been subtracted prior to estimation of the consumption stream. It seems unlikely that these factors would materially alter the conclusions of the analysis. The consumption weights are arbitrary, but the low weights in the earliest years make it unlikely that the calculations overstate the benefits of averting a birth in any significant manner.

Discounted lifetime net consumption was calculated by applying an annual discount rate of 10 percent to the net consumption stream in Panel C of Table E - 3. Summing up through age 65 yielded a figure of $740: the present value of lifetime consumption minus the present value of lifetime production, discounted at 10 percent per year, equals $740. Not all births live a full lifetime, and in particular, this lifetime net consumption figure will be irrelevant in cases of infant mortality (where there will be almost no consumption expenditures) and much too high in cases of childhood mortality. To adjust for the effects of mortality, then, a reduction of 20 percent figure is somewhat arbitrary, but designed to reflect the effects of both infant and child mortality. Finally, as a form of sensitivity analysis, the net consumption stream was discounted using a discount rate of 15 percent. Adjustment for mortality yielded a value per

birth averted of $514. *

---

* There has not been any effort to calculate a rate of return here because of the fact that there will be multiple rates of return (due to sign switching in the lifetime stream of benefits minus costs). In such a situation, the present-value approach presented here is conceptually preferable to an internal-rate-of-return approach.

ANNEX F

Prepared by:

Nils M.P. Daulaire, M.D., M.P.H.
Sam Edwards, M.A.

Submitted by:

Westinghouse Health Systems
American City Building
P.O. Box 866
Columbia, Maryland 21044

Submitted to:

Agency for International Development
LAC/DR
Washington, D.C.

Contract No.

AID/SOL/PDC-C-0197
Work Order No. 6

MANAGEMENT STUDY OF THE DIVISION OF FAMILY HYGIENE DEPARTMENT OF PUBLIC HEALTH AND POPULATION PORT-AU-PRINCE, HAITI

Nils M.P. Daulaire, M.D., M.P.H.
Sam Edwards, M.A.

Port-au-Prince, Haiti
28 May 1981

EXECUTIVE SUMMARY

The activities and accomplishments of the Division d'Hygiene Familiale (DHF) have been substantial and impressive. Due in large part to effective leadership and with the help of external funding assistance, the division has grown from a normative agency to one which has made major contributions to the provision of care to the Haitian people in the area of maternal and child health and family planning.

The major constraints facing the expansion and improvement of Maternal and Child Health and Family Planning (MCH/FP) activities do not lie within the DHF, but are due to the poorly developed structure of national policy and priority-setting as well as the internal weakness of the Department de la Sante Publique et de la Population (DSPP). The system of management used within the DHF, based largely on intuitive and experiential judgement, has been effective to date and has allowed the division to have an impact on Haiti that goes beyond the simple provision of services. The impact on attitudes of both health providers and the populace may be difficult to evaluate objectively but should not be discounted.

However, there are areas in which the DHF could improve its organization and management in order to maximize effectiveness and efficiency. In terms of overall organizational structure, the division should separate core technical activities from service activities. The major technical activity weakness is in evaluation; technical assistance in strengthening this function and the recruitment of a capable chief evaluator who can work with inputs from the supervision and statistics sections is recommended. Additionally, all service activities should come under the direction of a single section in order to ensure comparability, accountability, and replicability, and to allow an improved management controls systems to be put in place. This would serve as the basis for cost-effectiveness studies and aid in the definition of program priorities.

The basis for a solid management controls system already exists in the DHF, and the level of specific accountability is impressive when

viewed in the governmental context. With technical assistance an improved management controls system could readily be put in place to provide close ongoing monitoring of input and output indicators. Given the span of control required of the division leadership under the current system, this improved system will provide for more efficient oversight of activities and indicate problem areas before they become crises.

The implementation of the recommended management controls systems will also result in long-term efficiencies through selection and promotion of the more effective programs. Through this continuous monitoring, priority programs can be clearly identified and supported at times of budgetary cutbacks.

Integration of DHF activities and functions within DSPP operating structures is a principle with which all parties are in basic agreement. In order to avoid loss of important activities, such integration should be based not on a rigid timetable but upon the capacity of the various appropriate DSPP structures to assume effective responsibility and authority. The current Rural Health Delivery System project supported by AID has the potential for assisting the DSPP in developing the necessary capacities, and a carefully phased integration should be based on concrete accomplishments in this area.

In order to ensure the performance of legally mandated functions by the DHF, the Government of the Republic of Haiti should assume full financial responsibility for the support of the division's directorate and core technical services. This would ensure the division against some of the vagaries of donor organization funding. International assistance could then be directed towards the development and field testing of strategies for MCH/FP services and towards the provision of necessary supplies.

In the final analysis, the remarkable work which the DHF has already done would be reinforced and extended by a more clearly delineated management structure and the greater use of a regularized system of management controls.

FINDINGS

I. OVERALL ACTIVITIES AND STRUCTURE OF THE DIVISION D'HYGIENE FAMILIALE

The Division d'Hygiene Familiale (DHF) has rapidly evolved from a normative organization to one which also has substantial service delivery components.

The Division has the mandate to set national policy for maternal and Child Health and Family Planning but has evolved into a direct service provider in these areas.

This evolution has been due to strong leadership within the DHF and administrative and functional weakness with the Department de la Sante Publique et de la Population (DSPP). If the DHF were simply to transfer these activities to the DSPP, many programs would be lost.

Internally, the DHF would be better able to systematize its management of service activities and reinforce its core technical activities by separating them organizationally.

A reorganization structure is suggested which provides for four major bureaus:

- Standards
- Evaluation
- Strategic Development and Support.
- Administration

Administration is currently functioning very well and remains essentially unchanged. Standards combines the Medical and Nursing norms Section with the training subsection of the current Communication and Education Section. Evaluation combines the current supervision section with the Statistics subsection, but additionally requires the develop-

ment of a true evaluative capacity which is currently weak in the DHF. Technical assistance in this area may be useful. Strategic Development and Support combines all service activities, including Community Development and Commercial sales, and also subsumes Research as well as Public Communications (IEC).

The establishment of the Bureau of Strategic Development and Support is the major recommendation of this part of the report.

This development will allow the implementation of a uniform, replicable protocol for program design as well as comparable criteria for evaluation, while still maintaining total flexibility in actual strategic development and experimentation. It will provide the basis for more routinized management control systems and simplified cost-effectiveness studies. It will also simplfy the eventual process of integration of service activities within the regular operating structures of the DSPP.

II. BACKGROUND AND PRINCIPLES OF A MANAGEMENT CONTROL SYSTEM FOR THE DHF

The current management control system of the DHF is based heavily on the intuitive and experiential judgement of the Director and the Assistant Director.

During the initial stages of the development of the DHF, management control was relatively simple, but as the DHF expanded to conduct a number of programs and projects, some on a nationwide scale, the span of control under the personal judgement system has become unwieldy.

A basic requirement for the DHF is the separation and clear delineation of each service delivery program.

Service delivery programs of the Division are not, in many instances, clearly and separately defined and are also organizationally commingled with the sections concerned with normative functions.

III. IMPLEMENTATION OF A MANAGEMENT CONTROLS SYSTEM

The DHF already has most of the infrastructure necessary for the implementation of a management control system.

The DHF is fortunate in having:

- Considerable experience in budgetary planning
- Clearly defined functions and records in the Administrative Section covering Transport, Supply and Finance
- Statistical reports prepared from raw data by the Research and Evaluation Section.
- Comprehensive service delivery program overview by the Service de Supervision.

All of this infrastructure can be readily applied to a Management controls system.

Output units in quantifiable form can be derived from budgetary objectives, and used to monitor projects.

In the budgetary planning process for donor agencies such as AID and UNFPA, the DHF has set forth a comprehensive series of objectives and targets which, to a great extent, can be reduced to quantifiable units.

Quantified Input data are already available to the DHF through a number of existing functional units.

The DHF already has a great deal of necessary input data, which are not currently extracted on a program basis. The DHF has data on:

Salaries:	Attributable to program personnel
Fees:	Attributable by program (e.g. sterilization)

Travel & Per Diem:	Extractable from payroll data
Supplies:	Requisitions and distributions already recorded by source and destination
Transport:	Available trip ticket records can be extracted on user basis.
Training:	Is already listed budgetarily as a separate line item.

Information on these input units is already recorded and available in the Division and could be derived on a program specific basis.

Additional data can be derived from two major sections within the Division: the Section of Research and Evaluation and the Section of Supervision.

The Section of Research and Evaluation is already receiving a number of raw statistical reports which can be used to provide quantified data. The Section of Supervision is conducting on site visits which can also be used to provide further comprehensive data.

The output and input elements derived from existing information can be used to provide management with an efficient and effective management control tool.

With the basic elements available, the DHF can develop a management control system, which will provide a continuous review of the achievements of a program in relation to its specific objectives and of the costs of achieving those objectives.

IV. INTERACTIONS BETWEEN THE DEPARTMENT DE LA SANTE PUBLIQUE (DSPP) AND THE DIVISION D'HYGIENE FAMILIALE (DHF)

The DHF has gradually expanded into direct service delivery programs in support of its mandate to coordinate all national activities in Maternal and Child Health and Family Planning (MCH/FP).

Because the DSPP has been unable to provide direct service delivery programs of MCH/FP and because of the resources available to the DHF, the DHF has expanded into direct service delivery.

Interaction and integration of functions of the DHF with the DSPP should be based on the premise of the ability of the DSPP to effectively absorb and administer those functions.

The DSPP is currently undertaking a major effort to strengthen its infrastructure with the technical assistance of a team from Management Sciences for Health supported by AID. As objectives of this effort are achieved, the process of integrating functions from the DHF into the DSPP will be greatly facilitated.

There already exist a number of points of contact between the DSPP and the DHF.

These contact points and coordinating areas are:

- Regions and Districts of the DSPP
- Mobile Units
- Statistical Data
- Section de Supervision of the DHF
- Education Section of the DHF

These contacts vary from the exchange of information to joint operational responsibilities.

As the DSPP continues to develop an infrastructure in these areas, such as the projected formation of a Division d'Education Sanitaire, activities presently undertaken by the DHF would be gradually integrated into the equivalent DSPP unit.

DHF service activities, not of an experimental or pilot nature, should be carried out through the DSPP regional structure as these

structures become established and demonstrate the ability to absorb functions.

Administrative functions should be integrated into equivalent DSPP functions gradually, as these elements in the DSPP become organized, equipped and are able to provide support for requirements levied upon them.

There are three principal administrative functions which the DHF is presently performing independently:

- Supply
- Transport
- Finance

This circumstance has arisen partly because of DSPP inability in the past to undertake these functions on behalf of DHF. As the technical assistance to the DSPP substantially enhances DSPP ability to perform these functions, a gradual transfer of most of the functions could be achieved.

In the normative areas, the responsibility of the DHF will remain paramount.

Within the DHF mandate for MCH/FP are the normative technical functions of:

- Standards
- Supervision
- Evaluation

These will remain the responsibility of the DHF.

The DHF is already submitting MCH/FP plans to the Bureau of Planning of the DSPP

In the absence of a population policy promulgated by the DSPP and only the recent establishment of a Bureau of Planning in the DSPP, the DHF submissions have been accepted as final. As the DSPP becomes more actively involved in setting national policies for health, the DHF submissions will be increasingly adjusted to be incorporated into that national policy.

The phased transfer of responsibilities cannot be placed on a strict timetable but will depend upon the development of units within the DSPP fully capable of absorbing and executing these responsibilities.

Until the infrastructure is effectively in place in the DSPP, it is not feasible to transfer activities from the DHF. As a strong management structure is developed, effective distribution and record keeping systems evolved, and the demonstrated ability to fully absorb and execute functions and activities, then a gradual process of integration into the DSPP can be undertaken on a functional basis.

V. FINANCIAL IMPLICATIONS

Substantial resource savings will be dependent not only on integration of functions into DSPP but also on cost efficiencies within the DHF.

The distribution of personnel salaries and attendant costs into specific organizational and programmatic units is a first step in delineating costs.

There are some 305 individuals financially supported by the DHF. As these can be slotted against specific programs of activities, and incorporated into the management control system, a major step will have been taken toward a comprehensive cost analysis to determine where savings can be made.

The DHF will be in a position to determine the most effective projects or programs when a management controls system is in place.

Program cost effectiveness can be used as a major determinant in the selection of programs for expansion, reinforcement, re-direction, or diminution. Cost-effectiveness, however, is not the only determinant and is not a substitute for the informed judgement of professional staff.

The financial implications of the integration of administrative function into the DSPP offer substantial savings in the long term.

When the DSPP is in a position to take over the functions of finance, supply, and transport the requirement for administrative personnel will be reduced substantially.

QUALITATIVE RESEARCH REPORT

DRAFT

July 7, 1981

PORTER, NOVELLI & ASSOCIATES Inc.

QUALITATIVE RESEARCH REPORT

Contents

Summary

I. Background

A. Introduction and Purpose

B. Method

C. Sample Composition

1. Recruitment
2. Transportation and Location
3. Group Composition

D. Limitations

1. Sampling
2. Group Dynamics
3. Technical Problems

II. Findings

A. Overview

B. General Family Planning Issues

1. Meaning of family planning
2. Ideal family size
3. Incentives for family planning
4. Responsibility for family planning decisions
5. When to begin planning

C. Method Awareness, Attitudes and Practices

1. Awareness
2. General Attitudes and Practices
3. Specific Attitudes and Practices
Marketing Profiles

D. Reactions to Government Involvement in Contraceptive Distribution, Sales, Education, and Publicity

1. Government Rights and Responsibilities
2. Publicity
3. Reaching the Community
4. Government Sales

E. Reactions to Contraceptives as Commercially Distributed Commodities

III. Conclusions

IV. Recommendations

Apendices

A. Focus group moderator's guidelines
B. Transcripts of focus group discussions
C. Local news article on focus group activities

SUMMARY

Qualitative research, in the form of focus group discussions, was the first step in a marketing research survey to facilitate implementation of a contraceptive social marketing program in Haiti. Thirteen focus group interviews were conducted May 29 - June 8, 1981 in Port-au-Prince, Haiti. Information resulting from these discussions will be used to construct a quantitative survey questionnaire suitable for a larger sample of urban Haitians. The groups discussed prevalent attitudes, perceptions and values that influence family planning behavior. Additionally they reacted to issues of government involvement in education, sales and publicity, and the directions these efforts might follow. From the groups, social and marketing researchers will determine areas that need to be probed more deeply in the quantitative survey, and the appropriate context and language for these questions.

Key findings:

- Family planning is considered overall to be an aid to limit the size of the Haitian family. Participants described the economic advantages of planning. Disadvantages appeared to be method specific.

- The average desired family size is 3 children, 4 is considered to be the maximum that can be financially supported.

- About one-third of group participants had used a medically-recommended contraceptive method. All participants were aware of birth control pills, condoms, and one other method (sterilization, I.U.D., or cream barriers). All expressed an interest in learning a nafural method, one that took the woman's health into consideration.

- Participants were supportive of a government subsidized retail contraceptive program, but wished to see free clinical distribution of oral contraceptives continued. Participants agreed they would prefer to purchase contraceptives at pharmacies, where explanations and trained personnel were available. They also indicated that availability in grocery stores would be convenient.

- Participants felt that all media channels, but particularly radio and point of sales posters, would be appropriate to publicize a contraceptive education/sales campaign.

I. BACKGROUND

A. Introduction and Purpose

Technical assistance was provided to the DHF[1] and CRESHS[2] in March 1981 in developing a marketing and social science survey of family planning perceptions, attitudes and behaviors among the urban Haitian population. It was agreed that qualitative research, in the form of focus group discussions, would be conducted to provide directional information prior to the development of a quantitative survey questionnaire (i.e., provide guidance in areas of inquiry and sequence of words/phrases to be used in the questionnaire). Focus group guidelines, specifications for recruiting/preparing for the groups and moderator guidelines were prepared and translated into French. (See Marketing Research Document March 9-14). Moderators were trained and additional materials were sent prior to the arrival of the technical assistance team on May 29th. (See Schedule of Planning Activities.)

CRESHS arranged for 13 focus group discussions to take place beginning the evening of the arrival of the technical team May 29th through Thursday June 4th. The results of these focus groups representing about seventy respondents have been analyzed. A structured questionnaire (approximately 30 minutes in length) will be developed cooperatively by CRESHS and the technical team from this analysis, which will then be used among 1500 men and women, age 20-40 living in Port-au-Prince and other urban areas of Haiti.

The purpose of the qualitative research was to collect information in three main areas. These are:

1. General family planning issues

   - Ideal versus actual family size;
   - Concept and reaction to family planning;
   - Communication channels open for discussing planning;
   - Incentives and disincentives to planning;
   - Position of planning in life scheme - economic necessity, health issue, enjoyment, etc.

2. Method awareness, attitudes and practices

   - Advantages/disadvantages of methods;
   - Influence of social norms on method selection;
   - Influence of price and accessibility on method selection;

[1]DHF - La Division d'Hygiene Familiale. Dr. A. Bordes, Director.
[2]CRESHS - Le Centre de Recherche en Science Humaine et Sociale. Dr. J.B. Romain, Director.

3. Reactions to government involvement in contraceptive distribution, sales, education and publicity

   - The government's right/responsibility to offer information on contraceptives -- the means by which this should be done;
   - The government's involvement in the sale of inexpensive quality contraceptives; preferred outlets for this sale;
   - Publicity of government efforts, mentioning specific brands and methods; the media channels that should be used.

B. Method

Focus group interviews are held with a number of respondents simultaneously. A moderator using a discussion outline keeps the discussion on track, while allowing responses to be free and spontaneous. As new topics related to the outline emerge, the moderator may probe to gain useful insights. Sometimes entirely new issues emerge for quantitative exploration from participant responses.

The qualitative research study consisted of thirteen focus group interviews conducted in zones and quarters representative of Port-au-Prince low to very low income families. An initial six groups were conducted during the weekend of the 29th, five of which received critique and analysis of mederator style and guidelines by both members of the technical team. After Ms. Thompson's departure on June 1, revisions in the guidelines and suggestions to moderators were made by Ms. Fishman as required. An additional seven groups were observed through the 4th of June.

In initial discussions, moderators adhered tightly to the prepared guidelines. As they grew more experienced, the moderators allowed the later groups to be more self-directed and spontaneous. (See Appendix A for revised moderator's guidelines. Only those questions found to elicit nonrepetitive responses are presented). Each session lasted approximately 90 minutes. About half of the discussions were simultaneously translated into English, the rest were translated from the tapes.

C. Sample Composition

1. Recruitment

To ensure that the focus groups would represent the target population, certain criteria for participants were defined. Individuals were recruited according to these guidelines, with the modifications listed below.

a. Neighborhoods were to be selected at random to correspond with socio-economic levels "C" and "D." The average monthly revenue of a "C" household is $100.00. The average monthly income for "D" is about $20.00.

In reality, some of the participants were prior acquaintances of CRESHS personnel. Among themselves, participants were more often friends and close neighbors than strangers. Therefore, both random and non-random recruitment was performed.*

b. Individuals were asked the following questions:

- o Are you currently in union?
- o How old are you?
  (Respondents were offered a range to select, either 20-35 or 25-40).
- o What is your occupation?
- o What is your average monthly income?
  (Respondents were very reluctant to reply to this question).
- o Have you done any of the following in the past year?
  - Moved from another city into Port-au-Prince? How long ago?
  - Had any children in the last year?
  - Used a method to limit the size of your family or delay pregnancy?

c. Criteria for recruitment - those respondents who indicated that they:

- o were in union;
- o were between 20-40 years of age;
- o earned less than $200.00 per month;
- o either used or did not use contraceptives in the past year;

were invited to participate in a group discussion.

Assignment into groups was based on whether respondents had used contraceptives in the past year.

d. Additional recruitment questions - CRESHS asked the following additional questions at the time of recruitment:

1. What is the age of your partner?
2. What is your religion?
3. What is the last class you completed in school?
4. How many children do you have?
5. Do you belong to a social organization? Which one?
6. Where were you born?

*According to CRESHS, this was necessary to obtain the requisite number of participants.

CRESHS is in the process of tabulating the results of their recruitment questionnaire in order to further define the socio-economic profile of focus group respondents.

2. Transportation and Location

To facilitate transportation of participants and to put them at ease, groups were held in the participant's community, usually in the local high school. Participants were contacted by CRESHS and transported to the discussion location in the CRESHS Landrover.

3. Group Composition

Characteristics of focus group participants are briefly noted below:

Focus Group 1: Men between the ages of 20-35 earning $100-$200 per month. Men were self-described as users of contraceptives and had lived in Port-au-Prince for over one year. There were five participants in the group. CRESHS indicated that this was the most difficult group to recruit. The group was held at the National Institute of Education, Rue du Dr. Audin.

Focus Group 2: Women between the ages of 20-35 whose monthly household revenue is $100-$200. All women used a form of contraception in the last year, chiefly the pill. The women have 1 to 3 children each. There were six participants in the discussion. Location: College F. Adrien near Rue Titus.

Focus Group 3: Men between the ages of 20-35 whose yearly income does not exceed $400. The men were described as non-users of contraceptives. The discussion was held in an open-air church and the assistant pastor participated in the discussion along with four others. Location: Eastern zone of Delmas called "Jacket," off the Rue Oreste Chery.

Focus Group 4: Women between the ages of 20-35 whose monthly revenues are about $5. The women have not used contraceptives within the past year, most have children. The discussion was held at the Artisan's Center in central Delmas, on Rue Timmer off Delmas 31. Thirteen women participated in the discussion.

Focus Group 5: Men between the ages of 20-35 earning $90-$160 per month. Of the four participants in the group, two had not used contraceptives in the past year. The participants live in the Morne a Turf section, and the discussion was held at College La Pleaide, Rue L'Enterrement.

Focus Group 6: Women between the ages of 20-40 years whose monthly income is $90-$160. There were seven participants in the group with an average of 2-3 children each. Most of the group used contraceptives (a mother of 9 had a tubal ligation). Participants live in Morne a Turf and the location was the same as above.

Focus Group 7: Men between the ages of 25-35 whose yearly income is under $500. The men use contraceptives (or their women do). The discussion took place at the Normal School (Teacher's College) in Martissant. Though these men earned little money, two of the group of five were well-educated.

Focus Group 8: Women between the ages of 25-35. This group was to have represented the lower socio-economic stratum. Participants instead included the wife of a CRESHS professor, her cousin and a friend. The discussion was held in French (not Creole, the language of the other groups). As these women were well-educated, their contribution provides an additional perspective on the subject. However, their education places them outside the range of the target population regardless of what a beginning professor earns in Haiti.*

Focus Group 9: Six men between the ages of 20-35 who do not use contraceptives. The monthly income is $20-$30. The discussion was held at the Complexe Educatif Jean Claude Duvalier in the Bel Air section.

Focus Group 10: Women between the ages of 20-35 who do not use contraceptives. The household income ranges from $40 to $400 per year. The discussion was located in the Cite Simone with 5 participants.

Focus Group 11: Men between the ages of 25-40 with monthly incomes of $100-$200. Of the seven who participated, four used contraceptives and three did not. The discussion took place at the Juvenat des Freres du Sacre-Coeur which is located in the Carrfouer section.

Focus Group 12: Women between the ages of 25-40 with monthly incomes of $100-$300. Of the six who participated, the group was divided equally between users and non-users. The location was Juvenat des Freres du Sacre-Coeur .

Focus Group 13: Women between the ages of 25-40 whose monthly income is under $100. The group was divided between users and non-users. The discussion occurred late Friday evening in central Delmas. It was unobserved by the technical assistance team. It was unobserved by the Technical Assistance Team due to directions given by CRESHS.

D. Limitations

Qualitative research, including focus group interviewing, is diagnostic rather than definitive. This study should not be interpreted quantitatively. It serves as a guide for identifying trends expressed in subjective terms. This document will be used to guide the construction of a quantitative questionnaire. In addition, this report will aid in the development of future communications strategies.

*Comments made by this group which differed from the other groups are noted in the report. See transcript for additional details.

1. Sampling

Focus group participants are intended to represent the target audience, in this case, urban Haitians in lower socio-economic brackets. Additionally, participants were to be between the ages of 20-40 and engaged in a sexual relationship (union). Most participants met these general cirteria. (Participants of one group were above the specified socio-economic range.) In three discussions, it was apparent that the men were of different educational backgrounds, and the less educated participants remained silent while the more educated men dominated the conversation.* In some groups, moderator attention prevented this from happening.

2. Group Dynamics

a. Group size

A group size of eight-ten is thought to be the ideal number of participants for directed, free-flowing conversations. Despite attempts by CRESHS to over-recruit for each group, the average number of participants per group was six. (A few groups had only four participants, and one was too large at thirteen.) The small size of the groups may have made it more difficult for participants to speak in a free-flowing environment.

b. Prior acquaintances

It is a general rule in the United States that focus group participants speak more frankly when they are unacquainted with one another or the group moderator. Of potential consequence, participants often knew each other very well, and sometimes were acquainted with the moderator. While this fact did not appear to hamper their discussion of "family planning", it did sometimes preclude discussion of the more sensitive issues of sexual practice and income/spending patterns.

c. Additional impediments to group spontaneity and depth

Most of these are attributable to the relative lack of experience of the group moderators, as problems diminished as the moderators became more comfortable in their roles. Chief among these were:

- The moderator began the discussion by associating himself with the family planning program of the government. This perhaps biased early responses.

- The moderator probed for "scientific method" awareness, but left the issue of popular beliefs relatively unexplored.

*This problem could have been avoided by paying closer attention to education when recruiting participants by socio-economic status.

- The moderator tended to cut off respondents when they diverged from the question.

- The moderator contradicted or corrected participants for "wrong" answers.

- Sometimes the moderator would "grill" the respondent in order to obtain an answer. Other times he left the quiet participants out of the discussion. It was not until the final groups that the moderator struck a balance between direction and spontaneity.

3. Additional factors potentially affecting the reliability of focus group results. These include the following:

   - While respondents were segregated according to sex, every group discussion was observed by either CRESHS or technical team personnel of the opposite sex. While this did not appear to prevent male participants from sharing their opinions, female participants often appeared uncomfortable with male observers in the room. In several cases, husbands, friends or just passersby could not be prevented from observing the group discussions.

   - One focus group moderator was clearly of a higher SES than all of the group respondents. However, this moderator was skilled in group discussion techniques and she was able to direct the attention away from herself. Participants appeared to be at ease with her.

4. Technical problems

   There were technical factors affecting the quality of focus group information. The meeting rooms were often dark, uncomfortable and noisy. This perhaps made it more difficult for participants to feel at ease. It drastically reduced the quality of tape recording and several tapes were unusable due to the high level of background noise.

Acknowledging the limitations of focus group discussions generally, and of these groups in particular, it is important to note that much worthwhile information emerged. In nearly every case, participants appeared to respond frankly and easily to questions. They appeared to enjoy the discussion, and many expressed that a group such as this would be the ideal forum for family planning education. The consistency of responses across the groups suggests that certain attitudes and behaviors prevail among the target audience. It is now important to verify this information quantitatively among a statistically projectable sample.

II. FINDINGS

A. Overview

Overall, the participants of these focus groups appear to view family planning as a positive method to limit the total number of children in a Haitian family. In general, opinion is favorable to an organized family planning program originating from the government. Participants believe the government should:

- o offer information/education on contraceptives;
- o sell inexpensive, high quality contraceptives; and
- o publicize its efforts as well as generally motivate the people to use family planning.

There was a generally high level of awareness of contraceptive products among all group participants. Use of oral pills is widespread, followed by condoms, I.U.D.'s and injections. Few participants were aware of foaming tablets. Most female participants who use contraceptives presently receive them at no cost through clinics. Male participants purchase condoms in pharmacies and (occasionally) through machines.

Participants generally list economic incentives for family planning above all others. A parent can provide better food, education and general care for a smaller number of children. Women see it in their own best health interest to bear fewer children.

The disadvantages of family planning were all method specific. Ideologically, participants feel that times have changed and large families are an ideal of their youth or of past generations which they can no longer afford. A detailed explanation of the findings follows.

B. General Family Planning Issues

1. Meaning of family planning

According to focus group respondents, family planning is a method -

- o to limit the total number of children; and
- o to plan to have children when you can afford them; to control their births.

One woman described her attitudes towards family planning in this manner, "Some men do not like family planning. They say, the Bible says go forth and multiply, but I disagree because the life you are given is miserable. It's a terrible thing to see children going to school while the ones who can't, cry and are sad."

Several male participants expressed the view, "A woman who practices family planning is smart." Most of the men were concerned with finding a method that "fits the woman;" several said they took it upon themselves to purchase birth control pills and "insist that the woman drinks them every night." But when these same men were asked, "Do you (personally) practice family planning?", the reply would invariably be "no."

Therefore, despite the rather broad definitions participants gave for family planning, it is in fact narrowly defined as the "personal use of a contraceptive method." The less advantaged participants often stated, "You have the number that you want, and then you plan" (i.e., stop). The more advantaged participants added the concept of birth spacing.

2. Ideal family size

Participants agreed that the Haitian concept of "ideal family size" is changing. Previously, participants thought that six or seven children were necessary to "guarantee the future," but almost all agreed that four children was "the maximum a woman could take care of," or that "a man could support." As one participant explained, "A woman can have ten children, but what's the use? She can't take care of them now so they can't help her later."

Besides bringing "charm to the house," children are "of service to their parents," particularly if parents become ill. Participants believed that a family should have no less than two to three children. A Haitian saying was stated several times: "One eye is no eye," or in other words, "one child is no child, as he or she might die, and then you have no children." Participants were generally unconcerned with the sex of the child, as "That is up to God." Many expressed, "Well, I like girls, but each sex has its attributes." A couple with two boys, for example, might "seek for the girl." But most agreed that they would stop at three, even if they were all the same sex. It was generally conceded that boys are easier, though somewhat more expensive to care for.

When asked to differentiate the ideal number from their own family size, most participants presently had one to three children. Several had over six children, and one woman responded, "I wanted four, but God gave me nine."

3. Incentives for family planning

Both men and women described primarily economic incentives to reduce the size of the family. Fewer children can be better fed, have their school tuition and uniforms paid for, and cared for when they are sick. The fact that "times are hard and you can not afford many children" was stated in every discussion. Participants also mentioned the need to support other family members, and that this was more

feasible with fewer children. It is of interest to note that the concept of having only as many children as can be educated is in the process of taking hold, as indicated by one woman's remark, "I know that if I have three children, I can send at least two to school." In addition, the women felt that the following issues also influenced their decision to limit the size of their family:

- that too many children gave you too much work and made you prematurely old;
- that being pregnant all the time caused your partner to look elsewhere; and
- that pregnancy itself made you often feel ill.

Male participants mentioned no personal advantages to family planning apart from decreasing the economic burden of many children.

4. Responsibility for family planning decisions

Both men and women rarely discuss family planning as an issue except with friends of the same sex or the doctor. The women were divided as to whether they discussed planning with their partners. Half believed "men are not interested."

Who, then, is responsible for family planning decisions? This appears to depend on the stability of the relationship. Most of the men and women who lived with their partner expressed that this decision was shared. Some women explained, "the man decides, he has to pay." Other women maintained that it is their decision, and not their husbands. When the man does not live in the house, the women revealed, "It is not his decision, I decide."

5. When to begin planning

Men's and women's perspectives diverged most clearly when they were asked "At what point should a couple begin planning the family?" Almost without exception the women expressed, "You should have one child first and then plan." Only one woman disagreed with this idea; she believed that "even single people should plan." Women described wanting to be able to "provide completely for number one before starting number two." Most felt that a three-year interval between children was necessary. Several preferred to wait six years so the "oldest can look after the youngest," and so that the first born could begin attending school.

By contrast, the men believed planning could take place before the first birth. Several imagined, "You might want to raise your standard of living before having any children, maybe you should wait two years after getting married." Several men expressed that "having babies is how women control you marrying them (or staying with them)," but few indicated that taking precautions might reduce the power of the woman to manipulate them in this fashion.

C. Method Awareness, Attitudes and Practices

1. Awareness

Focus group participants were generally cognizant of at least three medically-recommended as well as several popular methods of contraception. They either personally used or knew of the following (in decreasing order of frequency):

- o birth control pills;
- o condoms;
- o the intra uterine device ("sterilet");
- o tri-monthly injections;
- o sterilization (tubal ligation or vastectomy);
- o the Dr. Ogino temperature method;
- o abstinence;
- o cream spermicide barrier;
- o withdrawal.

Very few women knew of the foaming tablet (e.g., Neo-Sampoon) and none had ever used it. Not one participant mentioned the diaphragm or cervical cap.

Many participants described admittedly confused versions of the rhythm method, such as

- o after your period you wait 17 days, "but you need to have a man who is cool. And what about the man who isn't cool?"
- o you wait 16 days after your period, then you are safe; or
- o you take your temperature for 5 days to know when you should not have contact.

Focus group moderators did not encourage the discussion of popular methods of contraception. However, the following were mentioned:

- o drinking ice water immediately after intercourse;
- o drinking a medicinal tea;
- o using lemon juice applied topically as a spermicide (drinking or eating too much citrus could make a woman sterile);

- washing after intercourse;
- tying the last child's umbilical cord in front of the house;
- having an old woman help you "throw the child away" (abortion).

2. General Attitudes and Practices

The general attitude of participants towards the folk methods is they "are not reliable." As one participant stated, "Some are used to it. They drink their little tea or their water, and they see that it works - so it's a method like any other for them. I would not use it."

All participants were concerned with finding a reliable method that pleased or physically suited the woman. They mentioned several general conditions which influenced their choice. These included the following:

- Both men and women expressed the desire for a "natural" method. For this reason, the temperature method (referred to as Ogino) was popular, and many participants indicated they would follow this method if they knew more about it.
- Men stated that women have a fear of introducing any foreign substance into the vagina. This is considered to be one route by which malevolent spirits can enter the body. Men believed that this principle applies to the condom, particularly if it "breaks and a piece remains inside." No women expressed this fear.
- Participants spoke frequently of personal cleanliness, that one method or another required extra attention to hygiene.* Several described the unpleasant smell of contraceptive creams. Another complained that they interfered with oral lovemaking.** Any contraceptive method that, in their perception, interferes with hygiene will not be acceptable.
- It was often stated by poorer participants, "If God wants me to have children, I will. If He does not, I will not. Therefore, it does not matter what I use."

3. Specific Attitudes and Practices

Participants had experienced a fairly wide range of contraceptive methods and were able to provide specific information in the following areas:

*For example, one woman explained that she as going to ask her doctor for a different way to clean herself now that she had an I.U.D.

**This may be a significant factor in acceptance of such products in Haiti.

- what participants desire in a contraceptive method;
- the attitudes and norms shaping this decision;
- participant satisfaction/dissatisfaction with currently available offerings.

This information is presented below in the form of "Marketing Profiles."

Marketing Profiles

Target Group I Men

A. Engaged in non-resident sexual unions who want an effective, natural, and pleasurable method of preventing pregnancy.

Specific concerns

1. Do not desire responsibility of children at this time;
2. Do not wish to be manipulated by women into marriage or a more permanent union;
3. Wish to give impression of being caring and responsible to woman.

B. Engaged in more stable sexual unions who want an effective, natural, and pleasurable method of preventing pregnancy.

Specific concerns

1. Wish to limit family size, space children;
2. Wish to find method suited to woman, that she will accept.

Product: Condom

Current DHF Offering: Tahiti colored condom

Target group reactions: Participants have experienced several brands of condoms ranging from Tahiti colored condoms (available in condom machines for 10 Haitian cents and at pharmacies for about 5 cents U.S.), the Conture plain condom, and a small variety of imported brands, the most expensive of which is packaged to resemble a small tube of gold coins. (3/$1.50)

Based on these focus groups, there appears to be some negative consumer response to condoms generally, and particularly to the Tahiti condom:

- They break. Tahiti are very poor quality;
- They are ineffective;
- They are cheap. Women associate them with cheapness and are insulted;
- Women find them unnatural, the color adds to this;
- They are tight;

- They decrease sensitivity;
- They are difficult to handle;
- Women dislike the oil lubricant, they think it makes them sick;
- When they are sold in the street they are perceived to have no value - they are toys for children;
- They are indiscretely packaged.

From their remarks, respondents indicated that they seek the following features in a condom:

- less prone to breakage (with a receptacle end);
- a natural color;
- lightly lubricated (perhaps dry lubricant);
- thin yet safe;
- packaged in quantities of 3 to 5 per package;
- more discretely packaged.

Recommended Offering

It is recommended that, based on negative consumer reactions to the Tahiti condoms, AID consider exploring the possibility of procuring another type of condom that is more acceptable to the target audience.

Information inserts and package designs as described below (see position and image).

Position of Product

Participants unanimously stated that family planning products are serious in nature. Many likened them to buying medicine. Men and women alike expressed that it was of paramount importance that the product fit the woman - it is for her health. Unaided, very few men mentioned using condoms to prevent venereal disease, and this issue was not explored by the group moderator. According to these focus group respondents, the condom should be positioned as a serious, safe device which is used by adult men who care about their woman's well-being.

Image of Product

While participants were unable to conceptualize names for contraceptives, they suggested situations from which product images might be developed.

- Most participants stated that they wanted a "natural method, one the woman would accept."

- o One woman suggested that "any man who is a real man would break one of things (Tahiti) right away."

- o Many men expressed their concern that neither the woman's nor their own pleasure be diminished.

Research in this area has not yet begun: however, focus group participants indicated that:

- the brand name does not seem important to respondent;
- that irrelevant images (ones having nothing to do with people or love), would not be seen as appropriate for the product.

Availability

As mentioned above, the concensus of opinion is that the condom has been overexposed and undervalued. Participants view it as a serious product which should be sold in a discrete fashion.

First location preference	pharmacy
Second location preference	the small market (epicerie)
Third location preference	hardware store

The borlette bank (lottery booth), while ubiquitous, was considered to be inappropriate for sales.

Those men who had used condom machines felt they are inappropriately placed. They would prefer to find them inside a pharmcy. It was preferred that a larger package (one the size of a cigarette pack) be dispensed.

Price

Most men stated that they preferred buying three to five condoms at one time. They felt the price should be low, but not so low that it seemed "too cheap." The cost of a Tahiti is currently 2 to 5 cents, or three for 20 cents. An appropriate price was not established for the condom. However, participants spoke of spending $2.00 to $5.00 for a month's supply of protection. Six condoms for $1.00 would probably fall within this range.

Many participants had tried a number of contraceptive methods to their dissatisfaction. All knew "horror stories" of another woman's experience with unsuitable methods. But several participants explained that "perhaps it was not the method to blame but the woman's personal hygiene."

Target Group II Women

For women, the issues affecting method selection are somewhat different. Most women expressed that they were seeking a method which is safe, reliable and effective - one that suits them physically.

Within the female target population, contraceptives do not appear to be marketable to women who have not yet had a child. It appears that a significant education effort directed to this issue would need to be initiated to effect a change in the attitudes on family planning of women who have not yet had their first child. However, women of higher socio-economic status indicate that a contraceptive could be used to postpone the birth of the first child.

A. Who have had first pregnancy and want to space births of subsequent children.

B. Who want to stop having children, but are afraid to be sterilized.

Specific concerns

1. To be able to care for existing children;

2. To retain a youthful appearance, not be worn out early by too many children and worries;

3. That the method has minimal physical side effects. It should not interfere with their natural condition to any great extent. Women were concerned with immediate effects on well-being (e.g., nausea, water retention, hygiene) to a far greater extent than long range effects of method (e.g., potential of getting cancer from the pill).

Product	Birth Control Pills
Current DHF Offering	6 brands available in clinics, and pharmacies. Women were most experienced with Nordette or Noriday.
Target Group Reactions	Of all medically recommended contraceptives, women use birth control pills most. Participants who currently used the pills stated that they were generally satisfied with the method. However, many participants had discontinued use of the pill because:

- it makes you fat;
- when you stop taking it, you bleed;
- you get your period too often;
- it makes you throw up;
- I was afraid I would become sterile.

Many women were afraid to use the pill for similar reasons:

- they cause you to gain weight;
- they can get stuck in your stomach and you'll need an operation to take them out;
- they make you sick (generally);
- they make you nauseous;
- they can cause cancer (2 participants mentioned this);
- they do not work;
- they cause sterility.

Recommended Offering

Women indicated that the currently available product suits their needs. However, it is clear that more information should accompany the initial prescription or distribution of pills. From their remarks, it appears that little follow-up care (adjusting dosage) or information is provided. Women are generally unaware that the pill they receive can be modified to suit their physiological needs, and this needs to be communicated.

Positioning of Product

Birth control pills are currently seen as a serious product, like medicine, which is provided by doctors in clinics. Many participants expressed a fear of birth control pills which has partially resulted from misuse of pills or incorrect prescription. The process of acquiring birth control pills should be repositioned as:

- o medical consultation -- prescription;
- o purchase/receipt of pills;
- o medical reconsultation should problems occur;
- o continue to purchase/receive pills;
- o medical consultation after 6-12 months of use.

Image of Product.

Participants are most concerned with the products:

- o safeness (i.e., lack of harmful side effects); and
- o effectiveness.

Other factors that are relevant to family planning generally could be included in any packaging or promotion of oral contraceptives. However, purchase or desire for a particular brand (formula) of oral contraceptives will be based upon the pill's suitability to the woman's physiology. Pills are currently acquired as often by men as by women. However, pills are clearly "for the woman."

Availability

Participants expressed the desire for more information on the pill, and would like this information to be available in clinics and hospitals. The pharmacy was the first choice for commercial distribution. As one woman indicated, the first time she purchased the product, she would like to receive an explanation or information, preferably from a pharmacist or doctor. After that, she would like the convenience of being able to purchase the product at the local supermarket (epecerie). This dual distribution: 1) in pharmacies with trained personnel; and 2) in markets for repurchase was approved by many participants. The borlette was seen as an inappropriate selling place.

Price

Most participants currently receive oral contraceptives free of charge. This was preferred. However, women felt the convenience of local availability would be worth paying a price for the pills.

An exact expected price was difficult to establish. According to pharmacist statistics, pills range in price from $1.50 to $5.00 per cycle. Women felt prices within this range (beginning at $1.00) were reasonable.

Participants all indicated the cost of the contraceptive is not an issue to them. It is of high enough priority, that as one woman stated, "If I had to buy pills and rice, I would buy less rice, or none at all, so I could buy my pills." While others disagreed that contraceptives are more important than food, most said they would "find a way to collect enough money to purchase pills should free distribution of pills cease."

Product — Foaming tablet

Current DIIF Offering — Neo-Sampoon available individually wrapped or in tube of 20.

Women were completely inexperienced with this form of contraceptive. However, the following remarks were made concerning cream sperm barriers which are applicable to promotion of the tablet:

- o creams are uncontrollable;
- o cream ruins the vaginal environment - the woman feels the need to clean;
- o cream interferes with oral lovemaking.

Women and their partners might find the foaming tablet a more acceptable offering as it:

- o is easy to insert;
- o does not spread or drip out;
- o does not create an excessive amount of material;
- o is inserted 5 to 10 minutes before intercourse.

In addition, the tablet causes little (if any) change in the woman's internal equilibrium. The tablet could be promoted as a more natural method that does not interfere with feminine hygiene.

Specific remarks concerning additional products and methods

Product — I.U.D.

While there is currently no interest in promoting the I.U.D., participants remarks are noted below:

- o it creates problems, particularly painful menstrual cramps;
- o if you are thin, it can get lost;
- o it can become tangled in the uterus.

One woman believed that the I.U.D. was the method she was obliged to use as she suffered from heart palpitations; she was satisfied with the method. Several participants who once had I.U.D.'s inserted had them removed, or had removed them themselves.

Method — Tubal ligation

Participants were generally very favorable towards this permanent method of birth control. However, many stated that their doctors disapproved because:

- o they were young;
- o their children might die;
- o they might get divorced.

Method — Rhythm

In nearly every focus group discussion, participants expressed an interest in learning more about the "Dr. Ogino" method, which has been interpreted as the temperature cycle method. This interest appears to be based on the fact that rhythm is natural, a key concern for participants. Their desire for information could be answered with instructional materials accompanying any barrier method. The barrier methods would initially be recommended for "unsafe" days, and gradually promoted for general use for greater "peace of mind" among consumers.

D. Reactions to government involvement in contraceptive distribution sales, education and publicity

1. Government Responsibilities

Focus group participants clearly believe it is the government's responsibility to do something that would "motivate the population to use family planning." As one participant expressed, "It reflects badly on the country that there are so many starving Haitian babies." They all agreed that the current family planning program was "a good thing for Haiti," but that "it needed to be more organized, and brought out to the people." One man suggested that "family planning should be discussed any time the Haitian population was assembled. For example," he half seriously suggested, "when they come to hear the President speak."

2. Publicity

Most participants first learned of family planning through popular national radio programs ("Radio Doctor" and "Fanny") and to a lesser extent from television. All agreed that the full extent of the media should be used to provide method-specific family planning information. Participants were equally enthusiastic that methods be publicized on billboards, in newspapers and in cinemas. Radio, billboard and cinema were the most highly recommended channels for information dissemination. They advised that many Haitians cannot read, and that many do not own televisions; however, television

appears to have some influence on Haitians, as they watch it in groups and it is seen as a "trend-setter." "You always see the newest things on television."

There was a consensus of opinion that children should be exposed to this publicity and education. Several participants explained that "children have children as young as 14, so they need to know about these things. They could avoid a lot of trouble." Participants cautioned, however, that these views would not be held by everyone. Some, "particularly Christian religious groups, would not agree with educating children in family planning."

3. Reaching the Community

Participants were concerned that a "personal contact" element be part of any education/information campaign. Several recommended that community groups be organized, and an agent be sent to explain (share) about family planning methods. They felt that neighborhood leaders existed who could be trained in family planning methods. These trained community leaders would augment the existing, but often inconveniently located, family planning clinics.

4. Government Sales

For the most part, participants were unaware of the government's involvement in commercial distribution. Most agreed that it is legitimate for the government to sell its own brand of contraceptives, and it was assumed that part of the cost is subsidized. Several participants believed that this is a mechanism for the government to introduce a higher quality product to the market, and control the price which would make it more accessible to the population. Participants did not differentiate between brand-specific and method-specific advertising of contraceptives.

In summary, focus group participants believe that the government should:

- motivate the people through publicity on radio, television, and in movie theaters;
- provide educational materials and agents who would organize community discussion groups (workshops);
- see that contraceptives are more widely distributed.

If the government becomes more actively involved in contraceptive sales, it should:

- provide a better quality product than currently distributed;
- sell it through pharmacies, or through specially trained vendors;

- sell it at a reasonable price, (from $1.00 to $5.00 per month's supply);
- advertise the product broadly, including proper usage.

E. Reactions to Contraceptives as Commercially Distributed Commodities

All but one female participant was unaccustomed to purchasing contraceptives, though males had limited experience in this regard. One man explained that he "purchased condoms at the pharmacy, and the package said NOT FOR SALE."* Yet, he paid $1.00 for them because he needed to have them.

Despite their lack of experience in purchasing contraceptives, respondents answered the hypothetical questions described below in a consistent manner.

1. Participants believed they would have no difficulty asking for contraceptives in a pharmacy or boutique - provided the store indicated that contraceptives were sold there.
2. An advertisement in the window of a store would be helpful.
3. If the pharmacist or vendor had received special training in contraceptives, he should have an indication of this clearly posted in his establishment.

In general, all participants agreed that commercial distribution of contraceptives would be convenient and a helpful service.

*This is an area of concern, which should be addressed at the implementation stage of the Contraceptive Social Marketing Program. If the same product is distributed, free in clinics and sold in pharmacies, individuals can resell product that is given free in clinics.

III. CONCLUSIONS

A. Attitudes Towards Family Planning

Based upon the findings of the focus group interviews, it appears that this sample of socio-economically disadvantaged urban Haitians views family planning as a way to improve the quality of life. They would like more information on contraceptive methods, and feel that the population needs to be motivated to practice family planning. Among respondents in this qualitative research, family planning is seen to be a good thing for Haiti.

B. Method Awareness, Attitudes and Practice

Use of contraceptives does not appear to be directly correlated with awareness. All participants knew of modern methods, only one-third of the seventy-four participants practice a medically-recommended form of birth control. Not one participant was unaware of methods such as the pill, the condom and sterilization. Strong interest was expressed in learning more about the temperature rhythm method. Popular methods are generally held to be unreliable, but occasionally effective. All participants requested more information on natural, safe and effective contraceptives.

Factors which appear to be related to contraceptive usage include (but are not limited to):

- a stable sexual union;
- belief that family planning will improve the quality of life; and
- credible source of the information (written, from a doctor, or public radio).

Factors which appear to be negatively correlated include (but are not limited to):

- the more children you have, the better. The main reason to stop having children is your economic position;
- belief in supernatural powers controlling life, including birth of children.

C. Government Involvement

Participants agreed that it was not only the right, but the responsibility of the Haitian government to become actively involved in popularizing family planning. Current government activities are considered good, but in need of improvements and expansion. Participants requested more education programs, more information and better products with wider accessability. They believe this is the government's responsibility.

D. Commercial Distribution and Advertising

Focus group respondents indicated that it would be convenient to have contraceptives available for sale in local pharmacies and markets but they also want to continue having them available free from clinics. They expect the government to provide these outlets with a better quality product than currently being offered at a reasonable cost. Respondents believe that all media channels are appropriate for advertising both contraceptive methods and brands. They also felt that establishments carrying family planning products and information should indicate this through window displays. Specific brand name or image concept information did not result from focus group discussions.

IV. RECOMMENDATIONS

A. Next Steps

The information obtained from these focus groups will be used to assist the development of a quantitative survey of the urban Haitian population. The draft questions originally presented to CRESHS and the DHF will also serve as basis for development. CRESHS will conduct a survey suitable for quantitative analysis according to the following specifications:

1. Population — Urban, men-women ages 20-40

2. Total Sample Size — 1500

3. Areas

Port-au-Prince	700
Cap Haitian	200
Cayes	200
Gonaive	200
Jeremie or Hinche	200

4. Analytical Areas

   Port-au-Prince/Other Urban
   Contraceptive Use
   Contraceptive Awareness
   Demographic Factors

   - Age
   - Sex
   - Education
   - Income
   - Union status (partner/no partner)
   - Number of children

5. Interview length - 30 minutes.

6. Interview type-structured questionnaire with pre-coded categories of response, less than 10 percent open-ended.

7. Pretesting - This questionnaire will be pretested in Port-au-Prince and Cap Haitian and revised in accordance with pretest results.

8. Conversion to Creole - We recommend that questions follow the linguistic conventions established by Ekadjati-Allman and Allman 1978 in the Haitian Fertility Survey. Review by Jim Allman (resident advisor to the DHS) prior to pretesting is strongly recommended.

B. Specific areas of concentration for survey

Analysis of focus group results suggests that these additional areas should be explored:

1. Effective source and channel of contraceptive information.

2. Economic incentives/disincentives to practicing family planning. Priority of monthly household expenses. Position of family planning in current lifestyle.

3. Psychological costs/benefits of practicing family planning including fears of specific methods. Incentives and disincentives of spacing children's births and limiting total number distinction of advantages to parents from advantages to existing children.

4. Current access to and use of medical care facilities, such as family planning clinics, hospitals, private physicians - specifically for family planning consultation.

5. Current access to and use of pharmacies for both purchasing medical supplies and consulting pharmacist.