263-0017 005302

PD-AAJ-130

(2)

fcl

QUARTERLY REPORT

April 1, 1981 to June 30, 1981

EGYPT WATER USE AND MANAGEMENT PROJECT

submitted by

M. E. Quenemoen, Project Technical Director
Cairo, Egypt

E. V. Richardson, Project Campus Coordinator
Colorado State University
Fort Collins, Colorado

Contract No.
AID/NE-C-1351 (Egypt)
Project No. 263-017

Consortium for International Development
Executive Office
5151 East Broadway
Suite 1500
Tucson, Arizona 85711

TABLE OF CONTENTS

Section		Page
I	PROJECT STATUS IN EGYPT	
	A. Introduction	1
	B. Mansouria Field Site	3
	1. Meska 10 Pilot Program, Quarterly Progress	3
	2. El Hammami Canal Pilot Program, Quarterly Progress	3
	3. Special Studies, Quarterly Progress	4
	C. Kafr El Sheikh	5
	1. Manshia Canal, Quarterly Progress	6
	2. Hammad Canal Pilot Program, Quarterly Progress	7
	3. Special Studies, Quarterly Progress	8
	D. El Minya	8
	1. Meska 26 Pilot Program, Quarterly Progress	9
	2. Abueha Canal Pilot Program, Quarterly Progress	10
	3. Special Studies, Quarterly Progress	11
	E. Main Office	11
	1. Task Group No. 1, On-Farm Irrigation, Quarterly Progress	13
	2. Task Group No. 2, Water Distribution Systems, Quarterly Progress	13
	3. Task Group No. 3, Farmer Organization, Quarterly Progress	14
	4. Task Group No. 4, Irrigation Advisory Service, Farm Management and Planning, Quarterly Progress	15
	5. Task Group No. 5, Water Budget, Quarterly Progress	15
	6. Task Group No. 6, Land Leveling, Quarterly Progress	16
	7. Task Group No. 7, Soil Fertility, Quarterly Progress	17
	8. Task Group No. 8, Soil Characterization, Quarterly Progress	17
	9. Task Group No. 9, Pest and Disease Control, Quarterly Progress	17
	10. Task Group No. 10, Conjunctive Use of Water, Quarterly Progress	18
	F. Training	18
	1. On-Farm Water Management Short Course	18
	2. Participant Training	19

Section		Page
	G. Workplan	20
II	BACKSTOPPING	22
	A. Planning and Coordinating Committee	22
	B. Training	22
	1. On-Farm Water Management Short Course	22
	2. Participant Training	22
	3. Salt River Project Exchange	23
	4. Special Training	23
	C. TDYs	24
	D. Equipment	25
	E. Work Plans	25
III	PERSONNEL	26
	A. Field Team	26
	B. TDYs	26
IV.	APPENDIX	27
	A. Memorandum to Staff Regarding Progress Review	
	B. Beni Bagdoul Water Budget Report	
	C. El Hammami Water Budget Report	
	D. Staff Paper #66	
	E. Staff Paper #67	

QUARTERLY REPORT

April 1, 1981 to June 30, 1981

EGYPT WATER USE AND MANAGEMENT PROJECT

Contract No. AID/NE-C-1351

(Egypt)

I. PROJECT STATUS IN EGYPT

A. Introduction

The major emphasis during the second quarter of 1981 was on implementation of the task groups and pilot programs. During the first quarter of 1981 ten task groups and 6 pilot programs were formed in order to organize the work of the Project and to provide a sharp focus on the Project objectives. During this quarter Project personnel began making monthly reports on the basis of task groups and pilot programs.

This quarterly report reflects the new project organization and reporting system. Pilot programs are reported under each of the three Project sites at Mansouria, Kafr El Sheikh and El Minya. This is followed by the Main Office report which includes the progress and short-range plans of each of the ten task groups. Long-range plans for the task groups and pilot programs are included in the plan book which is a part of the report for the first quarter of 1981.

Dr. Richardson, Campus Coordination was in Cairo during the quarter to meet with officials from USAID and the Government of Egypt regarding extension of the Project for one more year. Plans for the Project extension were reviewed by the Advisory Committee in Cairo on April 5th. In general all aspects of the proposed Project Amendment were approved by the Advisory Committee with the exception of an Administrative Assistant to the Chief-of-Party. This item was vetoed largely on the basis that project administrative matter should be shifted to the Government of Egypt side as rapidly as possible.

At the end of the quarter the final draft of the Project Amendment was completed and had passed through all reviews at the AID Mission in Cairo.

It had been sent to Washington, D.C. for final approval by the NEAC Committee.

One item in the Project Amendment called for the addition of a Project Editor during the final two years. This amendment to the Project was strongly recommended by the Mid-Project Review Team. Largely on the basis of this recommendation the Project hired a part-time editor to work on existing project papers toward the objective of making them into technical reports. Ms. Elizabeth Sherman edited four reports which are now in the Fort Collins Office awaiting final typing and technical review. The AID Mission in Cairo has approved a six-months TDY assignment for Ms. Sherman beginning in September to continue to work on publishing and distribution of project papers.

Mr. Dave Martella was also employed for two weeks during May and June to assist with preparation of project papers from Mansouria agronomic studies. These papers are also ready for final typing and review. During the quarter Mr. Martella was selected to replace Dr. Quenemoen as Project Staff Economist. The appointment becomes effective July 1, 1981.

A major breakthrough occurred during the quarter with respect to obtaining GOE funds for payment of Premium Salaries to GOE employees of the Project. After many weeks of discussion and negotiation the Ministry of Economy authorized release of LE 75,000 from a "Special Account". This order was then acknowledged by the Ministry of Finance which in turn ordered the Central Bank to turn over the funds to the Ministry of Irrigation for dispersement to EWUP personnel. The funds are adequate to provide premium salaries until June 30, 1982.

An on-farm water management training program was conducted in Egypt by the Project from May 28 to June 30. Twenty-five Egyptian professionals participated. Nine were directly involved in EWUP work and 16 came from agencies in the Ministries of Irrigation and Agriculture which are involved in irrigated agriculture and are in position to affect on-farm water management. The training course was conducted at Kafr El Sheikh.

The Small Farmer Credit Project invited the Technical Project Director to discuss water management at its montly staff meeting. Following up on this, Philip Brown, Credit Specialist from Assuit, visited the EWUP offices and requested a field tour of the Minya site for his team. The Credit Project would like to fund some irrigation improvements in the Assuit area and would like the cooperation of EWUP in evaluating alternatives and assisting with establishing design criteria.

B. Mansouria Field Site

Work at the Mansouria field site has been going on according to schedule. As shown on the personnel schedule below there are 18 professional staff members assigned to Mansouria on a full-time basis. Eng. Eldon Hanson is assigned to Mansouria half time. In addition, the field team consists of 28 nonprofessional technicians and laborers and 6 drivers. Three professionals, Moheb Semaika, Wadie Fahim and Lotfy Nasr returned from 2 semesters of advanced training at Colorado State University. During June they were assigned to the training program at Kafr El Sheikh but will be available for full-time work at Mansouria beginning in July, 1981. Mr. Shinnawi Abdel Atty Shinnawi attended a six-weeks farm management training course in Fort Collins during May and June. Three professional staff members including Mr. Hanafy Mahmoud Hanafy, Mahmoud Khedr Afifi, and Tarif Fahmy Abdel Rahman attended the training program at Kafr El Sheikh.

1. Meska 10 Pilot Program, Quarterly Progress. A cement floor was completed and 300 meters of walls were constructed to raise the Meska. A sump for the pumphouse was excavated. It is anticipated that the walls will be completed on this meska within three weeks. Then work will continue on the meska vents and pumphouse. Eng. Bayoumi is working with the Institute shop to construct watertight gates for the vents.

On-farm water management data are continuing to be selected on fields served by Meska 10. The economists have prepared baseline data for evaluation of the meska. The sociologists are continuing to collect baseline data and to work with farmers to develop procedures for scheduling water as soon as the raised meska is completed

Construction on Meska 10 is approximately 2 months behind schedule according to the pilot program plan. It is hoped to have the construction completed in time for the planting of winter crops in October. All phases of the work except for the construction appear to be on schedule.

2. El Hammami Canal Pilot Program, Quarterly Progress. Influential farmers were visited in the El Hammami area in order to inform all farmers of project plans for the pipeline as outlined in the project plan book. The plans developed by EWUP engineers were included in the contract which was let to Petrojet were reviewed thoroughly with all members of the Mansouria team.

Petrojet, the contractor, delivered 208 pipes of 50 cm diameter for use in construction of the buried pipeline.

Routine data including on-farm water management, social, economic and water budget were collected according to the pilot program plan.

A meeting was held with farmers to assist in getting out information about the pipeline project. There was no dissention in the meeting and the farmers pledged to give full support and cooperation.

At the end of June it was apparent that the Contractors have delayed the beginning of construction. We are pushing hard to get the job started. In general routine data have been collected and analyzed in accordance with the pilot program plan.

The latest report from Petrojet is that construction will begin early in August and the job will be finished in December.

3. Special Studies, Quarterly Progress. Tabulation was completed for the on-farm water management data for the seven wheat sites in Mansouria. These data compare irrigation efficiency on dead leveled fields, graded border fields and conventionally irrigated fields. Yield data were selected on these fields for wheat and the results will be correlated with irrigation efficiencies.

A solar pump is being installed on the Beni Magdoul Branch Canal in cooperation with the Water Management Research Institute and a German company.

Routine water budget data are being collected according to the plan developed jointly between team members and the water budget task group.

An economic evaluation of a drain established on Meska 6 has been completed.

Personnel, July 1, 1981

Professional

Dr. Mona El Kady	Team Leader	Bill Braunworth	Assistant Team Leader
Eng. Eldon Hanson	(one half time)	Moheb Semaika	Agronomist
Wadie Fahim	Engineer	Lotfy Nasr	Economist
Shinnawy A. Atty	Economist	Mohamed Naguib	Sociology
Ahmed Tahoon	Agronomist	Sabah Mahmoud	Agronomist

Farouk Abdel Al	Sociologist	Hanafy Mahmoud	Engineer
Gamal Fawzy	Economist	Mahmoud Khedr	Agronomist
Hammam El Saied	Engineer	Tarik Abdel Rahman	Agronomist
Azza Abdel Latif	Engineer	Ahmed Taha	Mech. Engineer
Tarif Zeitoun	Engineer		

Nonprofessional

Badry Mahmoud	S. Tech.	Hamdy El Said	S. Tech.
Ibrahim Hussein	S. Tec.	Gamal Ahmed	S. Tech.
Rokaya Abdel Mowla	Secretary	Ibrahim Abdou	S. Tech.
El Said Kamal	S. Tech.	Ibrahim Zakaria	S. Tech.
Moustafa Mahmoud	S. Tech.	Saied Rezk	S. Tech.
Mohamed Abdel Hamid	S. Tech.	Adel Abdel Moniem	S. Tech.
El Said Hamed	S. Tech.	Ibrahim Abdel Fattah	S. Tech.
Mohamed Farrag	S. Tech.	Mohamed El Dash	S. Tech.
Mohamed Shaaban	J. Tech.Car.	Ismail El Shimi	J. Tech.
Abdel Rahman Eid	J. Tech.	Abdel Rehim Mohamed	J. Tech.
Shawky El Awad	J. Tech.Lab.	Abdel Maaboud Ibrahim	J. Tech.Lab.
Selim El Tantawy	J. Tech.	Farahat El Ashkar	J. Tech.Lab.
Fathy Aboul Nasr	J. Tech.Lab.	Hamed Aly Tahoon	J. Tech.Lab.
Ahmed Ragab	J. Tech.Lab.	El Shimi Ismail	J. Tech.Lab.

Drivers

Yehya Abdel Sallam	El Said Elwy
Rashad Abou Bakr	Abdel Mohsen Abdel Halim
Salah Sadek	Nagy Hassan

C. Kafr El Sheikh

The work in Kafr El Sheikh is generally progressing according to the schedule outlined in the pilot program plans. As of July 1 there were 12 professional staff members, 11 nonprofessionals, and 4 drivers.

Personnel, July 1, 1981

Professional

Saad El Zarka	Team Leader	Tom Ley	Ass. T. Leader
Kamal Ezz El Din	Engineer	Abdel Fattah Metawie	Engineer
Amany El Kayal	Engineer	Ahmed Dardir	Engineer
Mahmoud Said	Agronomist	Mohamed Meleha	Agronomist
Magdy Awad	Agronomist	Ahmed Ismail	Agronomist
Sobhi Elewa	Economist	Ahmed El Attar	Sociologist
Abdel Fattah Masry*	Sociologist		

*Resigned from the Project on May 31, 1981.

Nonprofessional

Abo El-Magd Shehab	S. Tech.	Moheb Abdel Samad	S. Tech.
Mohamed Ahmed Badr	S. Tech.	Atef Khalaf Sayed	S. Tech.
Sayed Ahmed A'Hamid	S. Tech.	Mohamed Omar A'Magged	S. Tech.
Ramadan El-Orabi	S. Tech.	Hassan Mohamed El-Rifai	S. Tech.
Farag Bassiouni	S. Tech.	Mohamed Ahmed Abo Omar	S. Tech.

Drivers

Kamal Abo Omar	Usif El-Sayed El-Yamani
Ahmed Abdel Hamid Ali	Abdel Hamid Attia Shaaban

Economist Ragy Darwish is still in Italy for long-term academic training. He's expected to return to the Project in August, 1981.

Agronomist Ahmed Ismail and Economist Sobhi Elewa were trainees at the EWUP summer training program in Kafr El Sheikh in June. They will participate in the training tour to the U.S. in August. Engineer Abdel Fattah Metawie acted as engineering trainer for the EWUP summer training course.

Engineer Amany El Kayal will be leaving in August, 1981 for a 21-month study leave to the United States for a Masters Degree program sponsored by the Peace Fellowship program.

Engineer Abdel Fattah Metawie has been selected to attend an on-farm water management training short course in Utah, August 17-Sept. 18, 1981.

1. Manshia Canal, Quarterly Progress. Winter trials were conducted with wheat and flax on each of three farms. Data were collected on irrigation, drainage, water table, salinity and agronomic conditions during the growing season. Yield measurements were made for wheat and flax and these data are being analyzed. Summary reports should be available by mid-July.

Cotton trials were established on four farms in the Manshia area. Farmers were advised of recommendations for insect and pest control on the cotton crop. The ability of the farmer to obtain inputs from the local coops was monitored and observations were made regarding the farmers acceptance of recommendations. In one case approximately one feddan of cotton will be almost completely lost due to a Fusarium infestation. This loss could have been prevented if chemical seed treatment would have been available at the local cooperative. Farmers are being advised on irrigation schedules, zinc application and good furrow shaping and cultivation practices.

Three sites were selected for planting rice in the Manshia area. The land was leveled and farmers will be advised on agronomic and irrigation practices.

One site was selected for establishment of long furrow irrigation on corn. Agronomic and irrigation practices will be monitored.

The sociologists administered questionnaires dealing with village leadership.

Farm records are being kept on six Manshia farms according to the work plan. Crop enterprise studies have been initiated on wheat, flax, berseem, cotton and rice. Economic evaluation of the wheat crop and of farm machinery costs for cotton is under way.

Studies are continuing on the effect of eliminating field drains.

Crop calendar surveys have been initiated by the agronomists. This work will be coordinated with irrigation scheduling and delivery capacity of canals serving the area.

The Manshia pilot program team consist of: Amany El Kayal, Mahmoud Saied, Mohamed Meleha, Abdel Fattah El Masry, Ahmed Dardir, and Sobhi Elewa.

2. Hammad Canal Pilot Program, Quarterly Progress. Evaluation of winter crops was completed. This included analyses of irrigation and drainage data, water table data, soil salinity data, plant population for sugar beets, yield measurements for wheat and broadbeans, and groundwater salinity.

Cotton trials were established on three farms for the summer season. Farmers are being advised on irrigation scheduling, pest and weed control, and other agronomic practices. Sociologist Ahmed El Attar has been working closely with the farmers who rejected the long furrows to determine why. A report is in preparation.

Work continued on schedule for crop calendar surveys. Sociologist Ahmed El Attar completed meska cleaning and village leadership questionnaires for the Hammad area. He also worked with Eng. Kamal Ezz El Din to arrange for mechanical cleaning of the first reach of Hammad Canal which was not properly cleaned previously. Regarding the farmer cleaning of canals evaluation results show that farmers removed only 18% of the total required excavation to return the cross section to the original design cross section.

Farm records are being kept on nine farms in the Hammad area and crop enterprise cost studies continue.

Sites were selected for supervising rice and corn production in the area. Farmers were provided assistance with land leveling, redesign of on-farm irrigation systems, agronomic practices and pest and disease control.

In general the work on Hammad Canal is following closely the pilot program plan developed and reported earlier.

The Hammad pilot program team consists of Ahmed El Attar, Ahmed Ismail, Magdy Awad, Abdel Fattah Metawie, Kamal Ezz El Din, and Sobhi Elewa.

3. Special Studies, Quarterly Progress. Routine data for the water budget work is proceeding as scheduled in coordination with the water budget task group. The assistance of a man who lives in Abu Raia has been obtained to help keep observation wells in place and to keep them from being stolen. Farmers broke open the Om Sen flume on June 20. They were not satisfied with the flow obtained from the pipes established by the irrigation department. Recording instruments on the flume are being maintained to permit water measurement. It is necessary to establish drain recorders which will be done during the next quarter.

A work plan to study farm machinery (land leveling equipment) accessability to Abu Raia area was formulated and implemented. Eng. Amany El Kayal has major responsibility to complete the study with assistance from Tom Ley and Dick Tinsley.

Eng. Kamal Ezz El Din is working with Dr. Tinsley to gather data concerning the present Ministry of Irrigation methods for determining water delivery schedules. The data should be useful in providing recommendations on how to better coordinate water delivery with actual crop water requirements.

D. El Minya

The primary emphasis of work at El Minya is to establish a good gravity fed irrigation system. By raising canals and meskas approximately 30-40 cm a gravity system under good management can provide enough water to each farm,

at the required time, to permit efficient irrigation. The expected results from such intervention are higher yields, less labor requirements, savings of water, and increased farm income.

On June 30 the staff at El Minya consisted of the following:

Professional

Eng. Abdel Raouf	Team Leader	Dr. Erwin Nielsen	Ass. T. Leader
Esmat Wafik	Engineer	Ahmed Abdel Nahim	Engineer
Mohamed Awad	Agronomist	Salah Saleh	Agronomist
Elia Sorial	Economist	Nabil Farag	Economist
Abdalla Saber	Sociologist		

Nonprofessional

Mohey El Din Yehia	S. Tech.	Bakhit Nozer	S. Tech.
Nashaat Younes	S. Tech.	Mahmoud Wfty Nooman	S. Tech.
Imam Mahmoud Ebeid	J. Admin.		

Abdalla Saber returned to the team in June after two semesters of training in sociology at Colorado State University. Nabil Farag joined the team as staff economist to assist Elia Sorial with farm records, crop enterprise reports and economic feasibility studies.

Engineer Ahmed Abdel Nahim and Agronomist Salah Saleh attended the EWUP training program at Kafr El Sheikh and will participate in the irrigation tour to the U.S. in August.

Engineer Abdel Raouf was selected for participation in a water management course to be presented by Agricultural Water Resources, Inc. in San Diego during July and August.

1. Meska 26 Pilot Program, Quarterly Progress. The construction on Meska 26 was completed at the end of the "closure" period in early February, 1981. Since that time the EWUP staff has had an opportunity to interact with the farmers on managing the irrigation for this area which serves approximately 40 feddans.

During the past quarter meetings were held with the farmers and section leaders and unit leaders were elected to assist in managing irrigation on the meska. The farmers participated in (a) deciding the time of irrigation on the head, middle and tail reaches of the meska for each period, (b) organizing the cleaning of weeds and soil from the meska during each "off"

period, and (c) arranging for the training of farmers for spraying zinc sulphate on cotton.

A sharp-edged weir was installed at the head of the meska in order to accurately measure the water delivered.

Several farms were selected for leveling and establishment of long furrows. Water was measured to these farms and comparisons were made between application of irrigation water in long furrow systems and the traditional small basins. Difficulty is still being experienced in getting the farmers to work with a large flow (such as 28 liters per second) of water. Some of the better farmers have demonstrated that they are able to achieve high irrigation field efficiency with small basins using their traditional smaller flows of water. However with the introduction of animal-drawn cultivating equipment some farmers are realizing the benefit of long furrows if not for saving water at least for reducing the labor requirements in farming.

Data are being collected regarding wheat yields, broadbean yields, and farm records for evaluation of the raised meska and agronomic interventions.

Work is continuing to make the organization of farmers more effective and to firmly establish the use of advanced agronomic and irrigation technology.

Progress on Meska 26 is on schedule according to the pilot program plans in the project plan book.

2. Abueha Canal Pilot Program, Quarterly Progress. As outlined in the plan book the objective of the Abueha Canal pilot program is to make water available on a gravity basis to the 30 meskas served by the Abueha Canal. It should be designed so that a sufficient flow of water can be delivered to each meska in order to permit efficient on-farm irrigation to each farm on each meska.

Work is temporarily held up because the Survey Department has not completed the determination of the legal position of Abueha Canal. It is expected that this problem should be solved within weeks. The design of the new canal is essentially complete and a contract for construction can be tendered shortly after receiving the legal description of the canal location. Every effort is being made to prepare for major construction on Abueha Canal during the annual "closure" period in January.

It is planned to proceed with improvement of several additional meskas even before the construction begins on Abueha Canal. This is possible because there is sufficient head in the first reaches of the canal to permit gravity irrigation. It is intended to establish a meska of minimum cross section with banks designed for mechanical cleaning and shaping and for siphon irrigation.

Work is continuing toward the objective of establishing farmer organizations to manage and control the irrigation system after the engineering improvements are made. Based on the experience with farmers on Meska 26 the Project personnel are optimistic about the possibilities of establishing appropriate farmer organizations to take a hand in the management of the system.

3. Special Studies, Quarterly Progress. The water budget work is progressing on schedule according to plans worked out with the water budget task group. Recorders have been established on the Kom El Zahir Drain to record fluctuations of water level. The flume at the head of Abueha Canal is operating effectively and accurate measurements are being made.

Work is continuing on land leveling and the establishment of long furrow irrigation. This work also involves experimentation in observation of furrow widths and plant spacing.

Farmers are being introduced to the idea of eliminating some meskas and establishing more farm roads. This could be possible with longer runs for irrigation. As a matter of fact it may be possible to eliminate approximately half the meskas in the area which would make it possible to establish a much better system of farm roads. More and better farm roads would permit improved marketing of crops and increased mechanization including equipment for land leveling.

E. Main Office

There are 60 personnel assigned to the Main Office. They consist of 25 professional staff and 35 support staff.

Main Office Personnel, July 1, 1981

Hassan Wahby	Project Director
Gene Quenemoen	Technical Project Director
Farouk Abdel Al	Economics Discipline Leader
Dave Martella	Senior Economist
Gamal Ayad	Senior Economist
Mohamed Zanati	Agronomy Discipline Leader
Richard Tinsley	Agronomy Discipline Counterpart
Anwar Keleg	Senior Agronomist
Abdel Hamid Fahim	Engineering Discipline Leader
Eldon Hanson	Engineering Discipline Counterpart
Mohamed Sallam	Sociology Discipline Leader
James Layton	Sociology Discipline Counterpart
Mohamed Helal	Computer Engineer
Azza Nasr	Computer Engineer
Tim Gates	Water Budget Engineer
Ahmed Bayoumi	Farm Mechanization Engineer
Bishara Ishac	Senior Engineer - Motor Pool
Nadia Wahby	Senior Engineer - Water Requirements
Abdel Atti Allam	Engineer - Water Requirements
Wadie Ragy	Engineer - Water Requirements
Mohamed Nabil Naguib	Engineer - Water Requirements
Farida Abdel Meguid	Engineer - Water Requirements
Ahmed Taher	Senior Agronomist
Elwy Attalla	Senior Agronomist
Mohamed Ahmed Salem	Senior Administrative - Personnel
Mohamed Said El Shater	Senior Administrative - Expeditor
Salah El Din Salem	Junior Administrative - Secretary
Sayed Sakr	Junior Administrative - Storekeeper
Zeinable Abdel Ghany	Junior Administrative - Inventory
Eklhas Abdel Ghaffar	Junior Administrative - Secretary
Magda Yassin Mahmoud	Junior Administrative - Telephone
Ashgan Abdel Zaher	Junior Administrative - Photo Copier
Magda Mohamed Mosselhi	Junior Administrative - Secretary
Bamba Shaarawi Aly	Junior Administrative - Photo Copier
Maher Attalah	Junior Technician - Mechanical Work
Abdel Naby Yousef	Technician - Mechanical, Motor Pool
Ahmed Solieman Abdallah	Technician - Mechanical, Motor Pool
Ahmed Ibrahim	Junior Administrative - Motor Pool
Said El Said Elwi	Junior Administrative - Motor Pool
El Araby Mansour Shaine	Junior Technician - Electrician

Imam Sayed Wahba	Technician
Osman Shaker	Junior Administrative
Chaaban Mohamed Abdou	Telephone Operator
Boushra Beniamin	Senior Administrative - Accountant
Ahlam Abdel Rahman	Junior Administrative - Accountant
Taha Moustafa	Engineer - Water Laboratory
Ikram Mohamed	Engineer - Water Laboratory
Ahmed Ghanem	Technician - Water Laboratory
Susan Abou Shaddy	Junior Administrative - Library
Abdalla Gad	Technician - Motor Pool
Ahmed	Guard - Motor Pool
Saad Mansour	Management Assistant - Main Office
Hamdi Ahmed Hamdi	Translator - Main Office
Samaa Mohamed Atwa	Secretary - Main Office
Jihan Sadek Abdelnour	Secretary - Main Office
Engi Sadek Abdelnour	Secretary - Main Office
Mona Farouk Morsi	Secretary - Main Office
Nagwa Mohamed Ali Mazen	Public Relations and Administrative
Nawal Abdallah Ahmed	Accountant - Main Office
Moustafa Ibrahim Mahran	Electrician - Motor Pool

The American and GOE professional staff are assigned to task groups. The report of the progress for each of these task groups follows:

1. Task Group No. 1, On-Farm Irrigation, Quarterly Progress. The major activity of this task group involved visiting field sites to determine the types of on-farm interventions occurring in the pilot programs. It is planned during the next quarter to specifically identify the types of on-farm irrigation interventions that need to be analyzed and take measures to secure the necessary data for analysis.

Persons assigned to Task Group #1 are:

Fahim, Coordinator	Sallam
Hanson, Asst. Coordinator	Taher
Martella	Farouk
Azza	Nadia
Zenati	

2. Task Group No. 2, Water Distribution Systems, Quarterly Progress. The task group reviewed the Ministry of Irrigation Law No. 74 for 1971, relative to irrigation drainage.

Criteria were established for designing delivery system capacity specifically with respect to raising the Abueha Canal and meska. These criteria may be modified to fit specific conditions for other areas in Egypt.

A review of the basis of delivery was made on the Dakalt Canal by Eng. Kamal Ezz El Din and Dr. Tinsley. The first step was to obtain data on the crop rotation system for complete calendar years. These data are now being further refined and compared with EWUP experience in crop establishment and irrigation needs. Preliminary evaluation shows considerable discrepancies in the actual planting dates of crops and the date for which water is actually provided for these crops. Additional work will be done in an attempt to make recommendations for coordinating water delivery and crop irrigation needs in the Hammad and Manshia Canal pilot programs.

A time frame was developed for completing the construction on the Abueha Canal in cooperation with the Abueha Canal pilot program group. The time frame indicates that 11.5 months will be required from the time that the designs are finished and written specifications are prepared. It is important to note that the specifications cannot be written until the location of the canal is legally specified (see Abueha Canal Pilot Program, Quarterly Progress).

The progress of task group 2 depends on progress of pilot programs at El Hammami and Abueha. Since both of these pilot programs are somewhat behind schedule due to construction delays, the progress of task group 2 is also somewhat retarded.

Persons assigned to Task Group #2 are:

Fahim, Coordinator	Gamal
Hanson, Asst. Coordinator	Tinsley
Gates	Layton

3. Task Group No. 3, Farmer Organization, Quarterly Progress. This task group has been heavily involved in working with the organization of farmers at Meska 26, at El Minya, the farmers on Meska 10, at Beni Magdoul, and the farmer leaders of El Hammami. The task group is making good progress in assisting the team to establish a program for farmers at Meska 26 which makes them less dependent on the Project for irrigation operations. The pilot programs at Mansouria have not yet started operation as far as irrigation systems are concerned so the primary work has been to keep the farmers informed about progress and to be continuely sensitive to the emerging situation present at two sites.

Work has begun at Kafr El Sheikh to monitor the Om Sen irrigation practices during the rice season. The purpose is to use this information to assist with a scheduling program for those farmers next year.

A sociological evaluation with respect to the cleaning of the Om Sen Canal, Hammad Canal and the Manshia Canal at Kafr El Sheikh is being completed.

The task group is continuing to document the organizational aspect of various field activities and is judged to be on schedule with respect to task group plans.

Persons assigned to Task Group #3 are:

Sallam, Coordinator	Farouk
Layton, Asst. Coordinator	Hanson

4. Task Group No. 4, Irrigation Advisory Service, Farm Management and Planning, Quarterly Progress. Activities of this task group include preparation of a proposal for organization, operation and research needs for prototype of an irrigation advisory service. Dr. Ed Knop presented a paper while in Cairo on TDY on this subject. There appears to be some need for conceptual clarification and relationship to other information transfer organizations.

A farm record analysis was completed for the year 1979-1980.

Prefeasibility studies for Meska 26 at Abueha and Meska 10 at Beni Magdoul were completed.

A study was begun regarding farmers' attitudes towards raising of Meska 10 at Beni Magdoul.

Persons assigned to Task Group #4 are:

Farouk, Coordinator	Keleg
Tinsley, Asst. Coordinator	Fahim
Gates	Azza
Layton	Bayoumi
Sallam	

5. Task Group No. 5, Water Budget, Quarterly Progress. The major activity of this task group during the quarter was to assess the routine water budget data collection at each of the project sites and work with the teams to improve the routine collection of data. Arrangements were also made to routinely forward these data to the computer center for tabulation and storage.

The task group organized a water budget seminar for the engineering staff. This was presented in April.

A computer program was developed for analyzing Auger hole test data to determine hydraulic conductivity.

A computer program was established for estimating potential evapotranspiration by modified Blaney-Criddle methods.

The water budget work continues to be hindered by the unavailability of required weather station data. Negotiations have been made with the Defense Department in Cairo, but a flow of data from this source has not yet been adequately developed. Continued contact will be made with the Defense Department in order to make these data available.

Field staff assigned to coordinate the water budget work are:

Esmat Ahmed - Water Budget Coordination, Abueha
Wadie Fahim - Water Budget Coordination, Mansouria
Ahmed Dardir - Water Budget Coordination, Kafr El Sheikh
W. O. Ree - Engineer, (is expected to work with water budget task group - September 1 to December 20, 1981)

Water budget work appears to be on schedule and overall coordination has greatly improved during this past quarter (see Beni Magdoul and El Hammami water budget reports in the Appendix).

Persons assigned to Task Group #5 are:

Helal, Coordinator
Gates, Asst. Coordinator
Azza

6. Task Group No. 6, Land Leveling, Quarterly Progress. Measurements and observations of irrigation water on leveled land have continued at Kafr El Sheikh. The irrigation of cotton on leveled land appears to be greatly improved and germination is high. Problems have been experienced relative to getting access to small fields with the large equipment. Field access may depend on reorganization of meskas to provide more roads and therefore field access.

The task group distributed a questionnaire to field teams relative to type of equipment used, time and cost of operation, and improvements in irrigation efficiency and crop yields.

The task group will continue to collect data for further analysis of land leveling relative to typical Egyptian agricultural situations.

Persons assigned to Task Group #6 are:

Bayoumi, Coordinator	Gamal
Hanson, Asst. Coordinator	Sallam
Zanati	

7. Task Group No. 7, Soil Fertility, Quarterly Progress. All EWUP soil fertility information has been compiled. Dr. Zanati spend six weeks in Fort Collins preparing final reports on soil fertility. This is according to the task group plan.

Persons assigned to Task Group #7 are:

Zanati, Coordinator	Taher
Tinsley, Asst. Coordinator	

8. Task Group No. 8, Soil Characterization, Quarterly Progress. A meeting of the Project Agronomists and the Project Directors including TDY agronomists, Drs. Schemhl and Heil, concluded that the objectives of the task group should be modified. Objective No. 3 in the task group plan relative to remote sensing has been removed.

The soil survey reports from the three field sites are being reviewed with the intension of preparing agricultural and irrigation practice recommendations for the specific soil types.

Data correlating water table and yields for cotton in Kafr El Sheikh and Minya are being studied and plans for reporting are being developed.

The work of this task group will be oriented to the needs of task groups 1, 2 and 4.

The work of this task group is proceeding on schedule according to the modified plan.

Persons assigned to Task Group #8 are:

Taher, Coordinator	Zanati
Tinsley, Asst. Coordinator	Helal
Fahim	Bayoumi

9. Task Group No. 9, Pest and Disease Control, Quarterly Progress. The primary activities of this task group involved investigation of the effect of irrigation on the cotton leaf worm. Both laboratory work and field work were designed to measure the effect of soil moisture, irrigation intervals and irrigation levels on the cotton leaf worm population. It was found that more than half the population of the cotton leaf worm

pupae can be killed by saturating the soil with water for two days at 20 cm before planting cotton. By thus weakening the first generation it is believed that successive generations can easily be controlled.

Plans are under way with the Mansouria staff to conduct a school for farmers this fall. Extension personnel in the Mansouria area will be involved with this activity.

Persons assigned to Task Group #9 are:

Elwy, Coordinator	Gamal
Tinsley, Asst. Coordinator	Keleg
Layton	

10. Task Group No. 10, Conjunctive Use of Water, Quarterly Progress. The task group reviewed the water quality information in EWUP files and concluded that more sampling of drains, canals and wells will be needed for evaluation.

Vern Scott has been requested to serve on a TDY assignment this fall to work on a report concerning conjunctive use of water.

Persons assigned to Task Group #10 are:

Keleg, Coordinator	Taha
Hanson, Asst. Coordinator	

F. Training

1. On-Farm Water Management Short Course. The On-Farm Water Management Short Course was conducted from May 26 to July 1, 1981. The trainers included: Moheb Semaika and Jeff Jacobsen for agronomy, Mohamed Lotfy and Mohamed Haider for economics, Mohamed Naguib and Jim Layton for sociology, and Abdel Fattah Metawie and Forrest Izuno for engineering. Drs. Sallam and Redgrave were in charge of the training.

As a follow-up on the training a tour of irrigation facilities in the United States will begin July 28 and will conclude on August 17. A list of participants on the irrigation tour are as follows:

Dr. Mohamed Sallam, EWUP Training Officer
Dr. David Redgrave, EWUP Training Coordinator
Dr. Yack Moseley, Professor of Engineering

Eng. Atia Omar Atia	Under Secretary of State for Ministry of Irrigation, Assuit
Eng. Fathy Abdel Haliem	Under Secretary of State for Ministry of Irrigation, El Minya

Eng. Salah El Din Hassan	Under Secretary of State for Ministry of Irrigation, Beni Suef & Fayoum
Dr. Baligh Shindi Zikri	Director, Soil and Water Research Institute
Dr. Elwy A. R. Atalla	Director, Plant Protection Research Institute
Eng. Mohamed A. M. El Zeftawy	Director General of Irrigation, Gharbia
Eng. Mohamed Mahmoud El Malkh	Irrigation Inspector, MOI, Cairo
Agr. Ahmed Tahoon	EWUP - Mansouria
Agr. Ahmed Sayed Ismail	EWUP - Kafr El Sheikh
Agr. Hanafy Mahmoud Hanafy	EWUP - Mansouria
Agr. Mahmoud Khedr Afifi	EWUP - Mansouria
Agr. Salah Saleh Abdel Samie	EWUP - El Minya
Econ. Abdel Sattar Shineshan	M.O.A. - Agr. Economics Institute
Econ. Ahmed Mohamed El-Shater	M.O.A. - Agr. Economics Institute
Econ. Sobhi Ahmed Elewa	EWUP - Kafr El Sheikh
Eng. Abdel Razek Ismail Hashim	M.O.I. - Aswan
Eng. Adel Mohamed El-Kholy	M.O.I. - Gharbia
Eng. Ahmed Abdel Naiem Abdel Ghany	EWUP - El Minya
Eng. El Quaqua Mossad Megahed	M.O.I. - Gharbia
Eng. El Sayed Mohamed Ahmed Hassan	M.O.I. - Giza
Eng. Essam Menoufy Mohamed El-Sayed	M.O.I. - Quena
Eng. Fathi Aly Solieman	M.O.I. - El Minya
Eng. Kadry Ahmed Osman	M.O.I. - Giza
Eng. Mohamed Abdel Moniem El-Etefi	M.O.I. - Quena
Eng. Mohamed Salama El-Shafee	M.O.I. - Kafr El Sheikh
Eng. Mohamed Shebl Abdel Aziz	M.O.I. - Gharbia
Eng. Mostafa Abdel Ghany Sakr	M.O.I. - Gharbia
Eng. Saad Shehata Abdel Al	M.O.I. - El Minya
Eng. Tarief Fahmy Abdel Rahman	EWUP - Mansouria
Eng. Wadie Ragy Kelada	EWUP - Institute
Soc. Ahmed Gamal El-Din	M.O.A. - Agr. Extension and Rural Development Research Institute
Soc. Mohsen Bahgat Mohamed	
Soc. Saber El-Sabbagh	

A report of the recommendations of the training team for continued training next year is in process and will be included with the next quarterly report.

2. Participant Training. Four participant trainees, Wadie Fahim, Lotfy Nasr, Moheb Semaika and Abdallah Saber returned to Egypt in late May after two semesters of work at Colorado State Universtiy. Lotfy Nasr and Moheb Semaika went immediately to Kafr El Sheikh where they participated as trainers for the on-farm water management short course. Wadie Fahim returned to his post at Mansouria as staff engineer. Abdallah Saber returned to his post at El Minya as staff sociologist.

Four professional staff will be selected for 2 semesters of training beginning in late August, 1981.

Engineer Abdel Raouf, team leader from El Minya and Dr. Ahmed Taher, soil scientist are attending a water management school presented by Agriculture-Water Resources Inc. from July 18 to August 17.

Eng. Abdel Fattah Metawie and Soc. Mohamed Naguib will attend a four-week water management short course at Utah State University starting August 17.

Gamal Ayad attended graduate courses at Ein Shams University in economics.

Gamal Fawzy, economist, attended a graduate course at Cairo University during the past quarter.

Farouk Abdel Al and Shinnawi Abdel Ati Shinnawi attended the International Farm Management shortcourse held at Colorado State University, June 8 through July 17, 1981.

Economist Ragy Darwish is attending a project feasibility analysis course in Italy and will return to the Project in August, 1981.

Eng. Helal is attending on-the-job an academic training at CSU from June 6 to August 15.

G. Workplan

The workplans for task groups and pilot programs are included in the plan book which was a part of the quarterly report Jan. 1 to March 31, 1981. These workplans are relevant at this date and only slight modifications as reported above have been made.

A task group and pilot program review in September is planned as outlined in the memorandum included in the appendix. The purpose of this review process is to assess progress of each group for meeting its objective and improve the coordination between groups where overlapping objectives occur.

The training program for 1982 will be determined and preliminary plans will be made when the Project Coordinator, E. V. Richardson visits Cairo in October.

The Project has received USAID approval for following TDY assistance during the next two quarters:

Don Lybecker	Economist	July
Frank Santapolo	Sociologist	July
Rex Rehnberg	Economist	July - Dec.
Forrest Walters	Economist	August
Elizabeth Sherman	Editor	Sept. - Mar. '82
E. V. Richardson	Proj. Campus Coordin.	Sept. - Oct.
William O. Ree	Engineer	Sept. - Nov.
A. R. Robinson	Engineer	Oct. - Nov.
D. M. Robinson	Sociologist	Oct. - Nov.
Verne Scott	Engineer	Oct. - Nov.
Wayne Clyma	Engineer	Open

Staff Papers

No. 66 Improvement of Egyptian Irrigation Outlets, April, 1981 by Mona El Kady and A. R. Robinson

No. 67 Introduction to the Cooperatives in Kafr El Sheikh, April, 1981 by Abdel Fattah El Masry and Ahmed El Attar.

II. BACKSTOPPING

A. Planning and Coordinating Committee

The Committee interviewed three candidates for Senior Economist on the Project to replace Dr. Quenemoen who has assumed the position of Technical Project Director (Field Party Chief). The three candidates were Drs. David Eding and Keith Roberts and Mr. Dave Martella. Mr. Martella was selected and will report July 1.

Each POC member worked with the participant trainees in his discipline to advise him on his course work, special studies of project data, and the special work of his discipline in water management.

The Committee reviewed project work plans, selected TDYs, and worked on special projects. Drs. Schmehl and Saltanpour worked with Dr. Zanati on the Soil Fertility reports. Dr. Sunada worked with Mr. Hilal on computer modeling of groundwater, documenting project computer programs and advanced programmer training.

The POC committee consists of Dr. W. Schmehl, Agronomy; Dr. W. Clyma, Agricultural Engineering; Dr. M. Skold, Economics; Dr. D. Sunada, Irrigation Engineering; and, Dr. E. V. Richardson, Project Coordinator.

B. Training

1. On-Farm Water Management Short Course. The POC committee, along with Dr. Dave Redgrave and Mr. Gail Dunn, spent the quarter planning the course with the Egyptian and American staff who will put the course on in Egypt. The objectives and each day's activities were very carefully planned.

2. Participant Training. The four participant trainees' course work, special studies, and project work were carefully monitored by the POC committee. The four trainees worked very hard on their programs and in planning their functions as staff members on the project when they return. Three of the participants, who will help conduct the on-farm water management short course, spent part of their time planning this course.

Participant trainees are: Wadie Fahim, Engineer; Lotfy Nasr, Economist; Semeika Mohrob, Agronomist; and, Abdallah Saher Aly, Sociologist.

3. Salt River Project Exchange. The exchange program is waiting for the visit to Egypt of Salt River Project personnel to finalize the program.

4. Special Training. Engineer Fahim spent May 26 to June 19 in Fort Collins discussing the design and construction plans for the El Hammami pipeline. He traveled to California to observe construction methods, valve manufacture, water management research, and irrigation systems.

Economists Farouk Abdel Al and Shinnawi Abdel Ati Shinnawer attended the International Farm Water Management Short Course offered at Colorado State University, June 8 to July 17, 1981.

Engineer Helal is taking special courses on computer programming, June 6 to August 17.

The training tour of irrigation projects in the Western United States was planned.

C. TDYs

The following people spent the quarter in Egypt TDY:

Mr. William O. Ree, Agricultural Engineer (March 1, 1981 - June 9, 1981), continued work on water budget, helped on design of meska 10 in Mansouria and other miscellaneous duties as assigned.

Mr. Mohamed Haider, Research Associate Economics, (May 17, 1981 - July 10, 1981), help conduct the on-farm water management training course.

Mr. Forrest Izuno, Research Associate Engineering (May 19, 1981 - July 20, 1981), help conduct the on-farm water management training course.

Mr. Jeff Jacobsen, Research Associate Agronomy (May 19, 1981 - July 18, 1981), help conduct the on-farm water management training course.

Dr. Dave Redgrave, Agronomist (May 22, 1981 - June 20, 1981), help conduct the on-farm water management training course.

Dr. Rex Rehnberg, Economist (June 18, 1981 - January 1, 1982), review economic staff papers to determine suitability as project technical papers and make recommendations.

Dr. Frank Santopolo, Sociologist (June 28, 1981 - August 1, 1981), to help establish an evaluation research design to be used to measure the effectiveness of establishing and sustaining a farmer organization and the implementation of an on-farm irrigation advisory service.

Dr. Bill Schmehl, Agronomist (April 27, 1981 - May 24, 1981), to work with Bill Braunworth and Dick Tinsley in agronomist practices

D. Equipment

Purchase and shipping of the equipment for the El Hammami pipeline was monitored. This equipment is being delivered as scheduled except the pump supplier has informed us there may be a month delay. We are in contact with them to determine the reasons for the slippage.

E. Work Plans

Major emphasis will be placed on backstopping Cairo on the pilot projects, task group studies, and review of staff papers. Research will continue on irrigation system improvement, surface irrigation methods, drainage, water management alternatives and conjunctive use of surface and groundwater. Engineers Ree and Robinson will be in Fort Collins working on the water budget and water measurement prior to their TDYs to Egypt. The new gated vents described in Staff Paper 66 will be calibrated.

The field trip to observe irrigation management and practices will be conducted in August.

Efforts will continue on the Salt River Project Exchange. Dr. Richardson will spend time in September in Phoenix reviewing SRP training program.

Planning for the four participant trainees' training program this fall will be made.

Special training of individuals on an as-needed or request basis will be provided.

Dr. Scott will do preliminary work on the conjunctive use report prior to going TDY to Cairo.

It is planned that Dr. Wahby will visit Fort Collins to work with the POC committee on policy for review of staff papers, future project activities and recommendation to MOI of irrigation intervention that can be made now.

III. PERSONNEL

A. Field Team

No change this quarter

B. TDYs

Bill Ree, Engineer

A. R. Robinson, Engineer

Don Lybecker, Economist

Forrest Walters, Economist

Dan Lattimore, Tech-ical Journalism

Wayne Clyma, Engineer

Elizabeth Sherman, Technical Editor

Verne Scott, Engineer

IV. APPENDIX

Egypt Water Use & Management Project

22 El-Galaa St. Bulak, Cairo ARE
Phone 973474, 972674, Cable EWUP, EGYPT

Colorado State University Ft. Collins, Co. 80523
Phone (303) 491 8655, Cable ENGRCSU

0-82/81

July 19, 1981
Cairo, Egypt

TO: EWUP Staff

WAHB Gene Quenemoen

FROM: Hassan Wahby and Gene Quenemoen

SUBJECT: Task Group and Pilot Program Progress Review

It has been decided to hold a series of meetings in September to review the progress of task groups and pilot programs. Personnel expected to attend the task group meetings are Project Director, Technical Project Director, Egyptian and American Task Group Coordinators and the Team Leader from each field site. Task Group Coordinators may invite one or two others as necessary. The pilot program meeting should be attended by the Project Director, Technical Project Director and the entire field site team. Team Leaders may invite others to participate if necessary. The agenda for each meeting will be as follows:

1. Review objectives and purposes.
2. Review accomplishments to date.
3. Open discussion of plans, resources needed, and each discipline's contribution and representation for the next two quarters (Oct., 1981 through March 1982).
4. Agreement on plans and modifications, if any.

This review will give us an opportunity to assess progress, make adjustments where needed and coordinate work with other EWUP colleagues. It is expected we will have another round of review meetings in March, 1982.

Sept. 8 Task Group #1 On-Farm Irrigation
9-13 hours EWUP library

Sept. 9 Task Group #10 Conjunctive Use of Water
9-10 hours EWUP library

Task Group #9 Pest and Disease Control
12-14 hours EWUP library

ARE USA C.I.D.

Sept. 13 Task Group #2 Water Distribution Systems
9-13 hours EWUP library

Sept. 14 Task Group #3 Farmers Organizations
9-13 hours EWUP library

Sept. 15 Task Group #4 Irrigation Advisory Service, Farm Management and Planning
9-13 hours EWUP library

Sept. 16 Task Group #5 Water Budget
9-11 hours EWUP library

Task Group #6 Land leveling
13-15 hours EWUP library

Sept. 17 Task Group #7 Soil Fertility
9-11 hours EWUP library

Task Group #8 Soil Characterization
13-15 hours EWUP library

Sept. 20 Pilot Programs, Mansouria
9-14 hours, field office

Sept. 22 Pilot Programs, Minya
9-14 hours, field office

Sept. 24 Pilot Programs, Kafr El Sheikh
9-14 hours, field office

Each task group and pilot program coordinator should arrange for the presentation of items 1 and 2 of the agenda. The American co-team leaders should arrange a meeting place and agenda for reporting each pilot program at each field site.

HW/GQ/sa

cc: Niel Dimick
E. V. Richardson

B

BENI MAGDOUL WATER BUDGET REPORT

June, 1981

Wadie Fahim and Tim K. Gates

Status of the Water Budget Work

The Beni Magdoul water budget, in general, has suffered neglect for many months. Equipment has not been properly maintained and calibrated. There are significant gaps in the data needed for a comprehensive water budget. It appears that the primary reason for this negligence is a lack of supervision and coordination at the field site.

A meeting was held between T.K. Gates, Bill Braunworth, and Wadie Fahim on June 16 after Wadie's return from the States. Problems were discussed. Plans were made for taking action to remedy the existing situation. We are now developing a strategy which we feel, if efficiently implemented and monitored, will improve the quality of the water budget work to a level we can all be proud of. Details of the strategy will be included in this and subsequent monthly reports.

Field Work Last Month

The following work was accomplished in the field:

1. Continued routine data collection.

    a. Collected readings of water table level in each of the observation wells every two days.
    b. Collected daily weather station data.
    c. Obtained records of water level above the Beni Magdoul canal Nyrpic gate with the continuous recorder.

2. Began collecting current meter/stage readings in Beni Magdoul canal for determining values of discharge to check the calibration of the Nyrpic gate.

Data Analysis Last Month

Observation well records and Nyrpic gate recorder charts for January through May, 1981 have been obtained for preliminary analysis in the main office. Weather station data for January through March, 1981 has also been obtained.

Work continued for preparation of a staff report on the 1980 water budget for Beni Magdoul. The work has been delayed due to gaps in the weather station and crop survey data.

Water Budget Needs

The following needs have been identified for the water budget work in Beni Magdoul:

1. Observation wells

   a. Many of the observation wells, particularly the 1" steel wells, are plugged with mud. All wells should be checked and, if necessary, cleaned out with a bailer. This maintenance should continue on a monthly basis.
   b. Additional boundary wells, including sets for studying subsurface flow to drains, need to be installed.

2. Drain Flow

   A reconnaisance survey needs to be conducted to determine if there is now any surface flow from the area to any of the drains.

3. Hydraulic Conductivity

Several additional tests (auger hole or piezometer method) for saturated horizontal hydraulic conductivity need to be conducted at various locations in the area. These tests especially need to be conducted at the location of sets of observation wells used for determining water table gradients for estimating subsurface flow to a drain.

4. Beni Magdoul Inflow

Current meter data should continue to be collected for checking the calibration on the Nyrpic gate.

5. Crop Survey

A comprehensive survey of this year's summer crops needs to be conducted.

6. Weather Station Data

a. Weather station instruments need to be checked and maintained on a regular basis.
b. The equipment and method used for collecting pan evaporation data needs to be checked. The data that we are receiving appears to be inaccurate.
c. Calibration is needed for the anemometer.

7. Pumping Inflow

Better estimates need to be obtained of the amount of inflow from deep aquifer pumping and from pumping out of the drains.

8. Additional Inflow

Inflow from meska supplied by Nahia canal in the northwest needs to be measured or estimated.

9. Additional Outflow

Flow needs to be measured in the meska transporting water south of Beni Magdoul drain to irrigate 16 fed outside of the area.

10. Core Sample

Additional core samples need to be obtained in order to do a more comprehensive study on soil profiles and location of impermeable layers in the area.

11. Water Quality

Salinity data needs to be collected weekly in the drains, wells, and Beni Magdoul canal.

12. Reports

All data should be submitted on a monthly basis and a meeting arranged with main office staff one day a month to prepare a monthly report.

Equipment Needs

The following equipment is needed in addition to the standard equipment presently used:

1. Several perforated plastic 2" observation wells.

2. Electrical conductivity meter.

3. Brass bailers for cleaning 1" and 2" observation wells.

Plans for Next Month

The following activities are planned for next month:

1. Continue routine data collection.

2. Continue current meter measurements for calibration of Nyrpic gate.

3. Check and clean observation wells.

4. Prepare detailed plans for installation of additional boundary observation wells.

5. Begin measurements of additional inflow and outflow.

C

EL HAMMAMI WATER BUDGET REPORT

June, 1981

Wadie Fahim and Tim K. Gates

Status of the Water Budget Work

Lack of supervision and coordination and shortage of personnel have caused serious neglect of the water budget work in El Hammami during the last year. For instance, no current meter data has been collected in El-Hammami canal for this year.

In view of this situati n and the upcoming construction along the canal, the 1981 water budget will be abandoned. Emphasis will be placed on enhancing the 1979 and 1980 water budgets by additional study in the area.

Field Work Last Month

The following routine work was accomplished in the field:

1. Readings were taken of water table elevations in the observation wells every other day.

2. Daily water level at the inlet to El Hammami canal was continuously recorded.

3. Daily weather station data was collected.

Data Analysis Last Month

Water table elevations in the observation wells, El Hammami canal water level recorder charts, and daily weather station data for January through

March, 1981 were received by the main office for preliminary analysis.

Analysis of El Hammami canal inflow for 1980 was finished with the results shown in Table 1. The total inflow calculated for 1980 was 2, 198, 865 m^3, a 17% reduction from the previous year's 2, 698, 170 m^3.

Table 1
Monthly and Total Discharge Volumes from Mansouria Canal to El Hammami Canal During 1980

Month	Discharge (m^3)
Jan.	172,926
Feb.	103,917
Mar.	152,138
Apr.	179,794
May	157,939
Jun	132,938
Jul	166,030
Aug	290,293
Sep	196,284
Oct	263,401
Nov	152,748
Dec	230,457
Total	2,198,865

This apparent reduction in canal flow to the area is probably due to the increase in deep aquifer pumping that has been noted recently.

In order to complete satisfactory water budget reports for 1979 and 1980, additional data must be obtained regarding deep aquifer pumping in the area and crop surveys.

Water Budget Needs

The following needs have been identified for the El Hammami water budget work:

1. All existing crop survey data for the El Hammami area for 1979 and 1980 should be collected and sent to the main office.

2. An extensive study on pumping in the area needs to be conducted to try to determine the amount of water supplied by pumping compared to that supplied by the El Hammami canal. Thus, the following should be done:

   a. Determine the total number of pumping wells in the area.
   b. Obtain data on discharge rate of pumps in the area.
   c. Obtain data on the total hours of pumping over the next several months.
   d. If possible, get current meter data in El Hammami canal while pumping data is being collected.

3. Additional sets of boundary observation wells need to be installed to determine groundwater pressure gradients for investigation of lateral flows.

4. Tests (auger hole or piezometer method) for saturated horizontal hydraulic conductivity need to be conducted at various locations in the area. These tests especially need to be conducted at the location of sets of boundary observation wells used for investigation of lateral flows.

5. Salinity data needs to be collected weekly in the drains, wells and El Hammami canal.

Equipment Needs

The following equipment is needed in addition to the standard equipment presently used:

1. Several perforated plastic 2" observation wells.

2. Electrical conductivity meter.

Plans for Next Month

The following activities are planned for next month:

1. Continue routine data collection.

2. Prepare detailed plans for an extensive study of pumping in the area.

3. Prepare detailed plans for installation of additional boundary observation wells.

4. Reinstitute regular periodic current meter measurements in El Hammami canal.

D

Staff Paper #66

Improvement of Egyptian Irrigation Outlets

By

Dr. Mona El Kady & A.R. Robinson

April, 1981

Improvement of Egyptian Irrigation Outlets

by

Dr. Mona El Kady[1/] and A. R. Robinson[2/]

I INTRODUCTION

In Egypt, the old, cultivated country with the very extensive irrigation system and very small ownerships; the outlet structures present a real problem. It is at this point in the irrigation systems where the land owners (water users as a private sector) and the government authority (irrigation system operator) meet. The problem has emerged mainly because of the unfair proportionality in water distribution created by the existing outlets.

Egypt depends mainly on the River Nile as the main source of the irrigation water. The Nile provides water to a series of water courses as shown in Figure 1 which can be categorized as follows:

1. Principal Canal
2. Main Canal
3. Branch Canal
4. Distributory Canal
5. Private Ditches

Turnouts or outlets, required to convey the irrigation water to the private ditches or the fields are the subject of this study. They include:

a. Field outlets: located on the distributory canals to provide water by gravity to the private ditches (meskas). The meska then serves farms throughout its length.

1/ Team Leader, Mansouria District, Egypt Water Use and Management Project, Ministry of Irrigation, Cairo, Egypt.

2/ Consulting Engineer, Laurel, Maryland, U.S.A.

PRELIMINARY

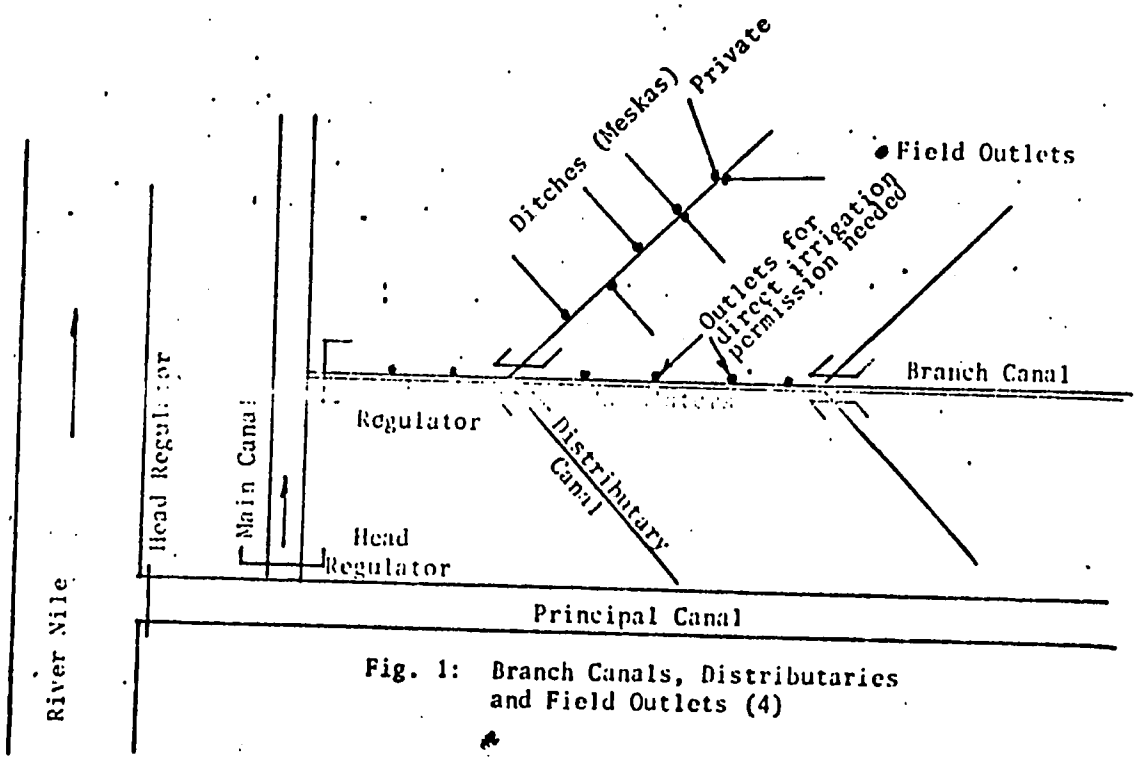

Fig. 1: Branch Canals, Distributaries and Field Outlets (4)

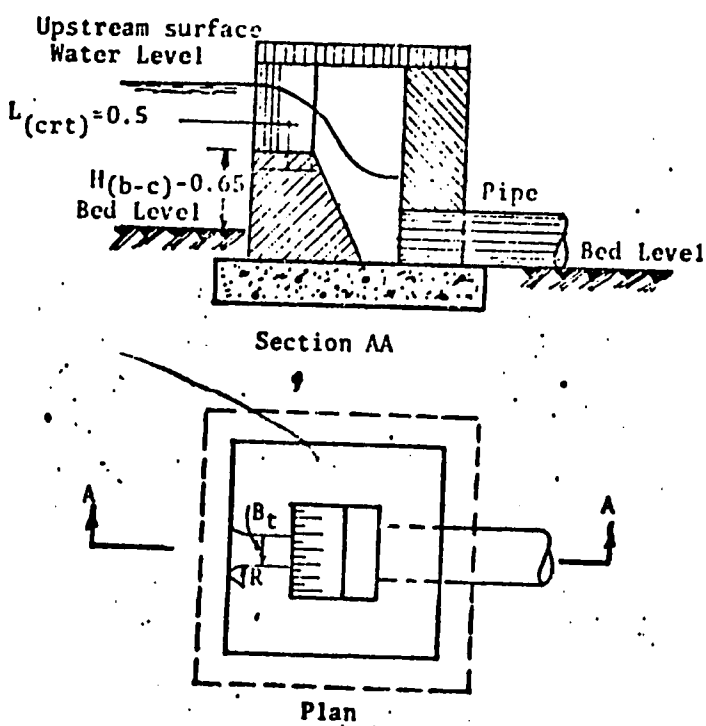

Figure 2: Fayoum Standard Weir Farm Turnout (2)

b. Direct irrigation outlets: located on the branch canals or distributory canal to provide water to a private lift device such as pumps, sakias, or tambour.

The same outlet structures have been used for both field outlets and direct irrigation outlets. Usually, water is supplied to the main canal and the distributory canal on a rotational intervals, typically 3 turn rotation; 4 days on and 8 days off or two turn rotation, 7 days on and 7 days off which depends on the crop pattern and the soil type. Unfair proportionality exists because the present system favors those farmers on the upper end of the meskas and penalizes those on the end.

II HISTORICAL REVIEW

For more than 6000 years, Egypt had used basin irrigation. Flood waters were held for some forty-five days per annum in basins surrounded by dikes. Water was held in the basins with depths ranging from 0.3 to 3 meters for an average depth is about 1 meter. The retention of this water over the land for a period of six weeks permitted the thorough saturation of the subsoil and this water could be drawn on in winter and spring for growing crops.

About the year 1820, the irrigation system in Lower Egypt was changed by excavating a number of deep perennial canals capable of carrying the low level summer supply of the Nile. The excavation of the large canals necessitated 110 million cubic meters of earthwork, representing an expenditure of LE 3,300,000 at that time. The annual excavation of the deep summer canals in Lower Egypt amounted to be more than 13 million cubic meters and continued for many years. The availability of this water allowed the cultivation of cotton during the summer and this introduced cotton on a large scale in Egypt.

The Delta Barrages were constructed to maintain high water levels upstream to feed the main canals of Lower Egypt. The Delta Barrages were

PRELIMINARY

completed in 1865, but owning to accidents and construction difficulties, they were not continuously used till 1872. A complete system of perennial canals covering all the cultivated lands in Lower Egypt was in use before the end of the last century. The construction of the Low Aswan Dam; Assuit, Esna, Nag Hamadi Barrages; and High Aswan Dam, enabled the gradual conversion of basin irrigation to perennial irrigation in Upper Egypt.

Since the introduction of perennial irrigation, engineers involved in water management have been concerned about equity in distributing water among farmers. Farmers originally made breaches in the banks of the distributary canals to obtain their requirements of irrigation water. More recently a turnout structure has been required and the improvement of these structures is the subject of this study.

From the beginning of the 20th century, the Egyptian authorities have used two different types of outlet structures, the Fayoum Weir and Dupuis pipe outlets. The Fayoum Weir, also called the standard Clear Overfall Weir, was used extensively in Fayoum province. There the land elevation changes from +25.00 to -42.00 m in about 30-40 km. This natural slope of the land is ample to permit the use of a free overfall structure as a combined turnout and water measuring structure. Figure 2 shows a standard design for the weir. The Fayoum irrigation system is considered to be an ideal system as compared to systems in other Egyptian provinces.

Most of the irrigation turnouts in Egypt are the pipe outlets called Dupuis outlets. These were developed starting in 1902 by Dupuis and consist of straight pipe in sizes over a range of diameters and lengths, without valve or gate control, as shown in Figure 3. The pipes were calibrated for flows based on: a constant depth over the top of the pipe of 25 cm, constant length of 10 meters, and submergence on the downstream end. Based on these calibrations and later studies, a relationship was developed to select diameter and length of pipe based on irrigated area to be served, assuming a constant water duty.

PRELIMINARY

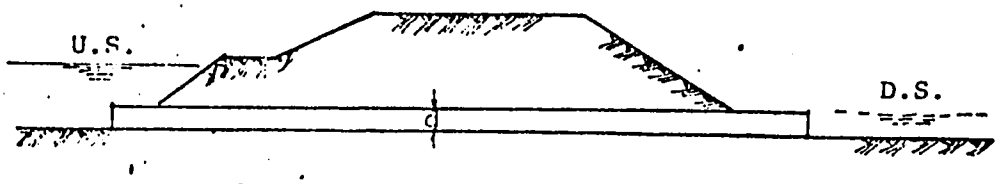

Figure 3: Present Field Outlets (4)

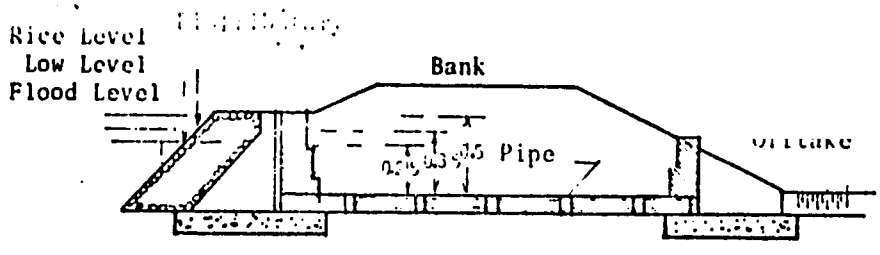

Figure 4: Improved Pipe Outlet with Inlet and Outlet Structures (6)

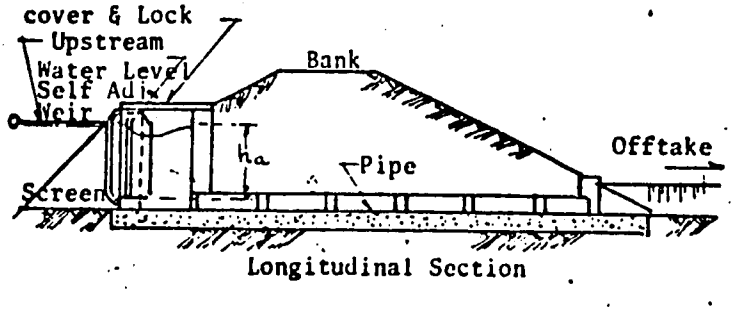

Figure 5: Self Adjusting Weir Entrance-Pipe Outlet (3)

PRELIMINARY

III PRESENT SITUATION

On the Mansouria District, (1), and in most other areas in Egypt water is conveyed from branch canals and distributaries to the meska through a Dupuis pipe outlet. The meska then serves one to several farms throughout its length. There usually will be several pipe outlets serving meskas on a branch canal. There are no gates or control features on the pipe outlets. Flow through each meska pipe inlet is therefore determined by: the depth of water at the entrance; pipe inlet conditions; the diameter; length and roughness of the pipe; and the position of the downstream water surface. The assumption is made that the branch canal system, with its numerous pipe outlets, operates at a constant water depth and this water level is maintained at each outlet. The top of each pipe outlet is located 25 cm below the design water surface elevation in the branch canal. This design water surface elevation is up to 50 cm below the surface of the surrounding farm lands. The individual farmer typically takes his water through a small channel from the meska or directly from the meska and must lift the water by pump, shadouf, tambour, or sakia. The water is pumped into a head ditch which conducts the flow to the field boundary. Figure 1 is a sketch of the present field outlets, showing their location relative to the entire canal system. Shown in Figure 3 is the widely used field outlet which is sometimes modified with improved upstream and downstream structures as shown in Figure 4.

The size of pipe outlet, diameter and length, required to serve an area to be irrigated is determined using Table 1. Table 1 was obtained using data obtained by Hindmarch and Butcher who corrected the original Dupuis data. Table 1 gives the area to be served in feddans based on a water duty of 50 cubic meters per feddan per day (11.9 mm per day).

IV MODIFICATIONS AND ADDITIONS TO EGYPTIAN STRUCTURES

The irrigation turnouts, which are the subject of this study, are those which may be used for direct irrigation from the main canals (see Figure 1) and from the distributary canals into the meskas (private

Table 1. Size of Pipe Outlets Depending on Irrigated Area

Dupuis Figures	Diam. in cm.	Lengths of pipes in meters and area served in Feddans assuming a water duty of 50 m^3/feddan/day									
		Pipe length - meters									
		5	10	15	20	25	30	35	40	45	50
Fed.		Fed.	Fed.	Fed.	Fed.	Fed.	Fed.	Fed.	Fed.	Fed.	Fed.
10	10.0	16	13	11	9	9	8	7	7	7	6
20	12.5	25	22	19	17	15	14	13	12	12	11
30	15.0	41	34	30	27	24	23	21	20	19	18
45	17.5	58	49	43	39	36	33	31	30	28	27
65	20.0	78	67	59	54	50	46	44	41	39	37
85	22.5	101	88	78	72	66	62	58	55	53	51
110	25.0	126	111	100	92	85	80	75	71	68	65
135	27.5	157	138	125	115	107	101	95	90	86	83
165	30.0	188	167	152	140	131	123	117	111	106	102
235	35.0	262	236	217	201	188	177	168	167	154	149
315	40.0	348	316	292	272	256	242	231	221	212	204
405	45.0	447	406	380	356	337	320	305	293	281	271
510	50.0	555	513	479	451	427	407	389	374	360	347
625	55.0	680	630	590	558	530	506	488	465	450	435
760	60.0	817	760	715	678	647	618	593	578	551	534

PRELIMINARY

PRELIMINARY

ditches). Over a long period of time there have been a number of modifications suggested for the existing Egyptian pipe turnouts and different turnouts have been proposed and used in some cases. Most of the proposed and actual changes were for the original Dupuis pipes, (Figure 3) although other devices were also considered. In several cases, the different designs and structures were modeled and studied in the Delta Barrage hydraulics laboratory. The following is a review of some of the studies.

1. Open Flume Outlets. Attallah (6) and others have considered the use of a modified Venturi flume as a turnout device. Specifically, Attallah discussed the cutthroat measuring flume as a turnout, pointed out the required geometry and analyzed the different conditions of flow. He reviewed the procedure for correct installation and operation of the cutthroat flume and discussed the maintenance for assuring accurate operation. The flume outlet gives an accurate measurement of discharge but cannot be used to regulate the flow since it depends on the upstream depth only, for release. For the turnout function, the depth of flow in the branch and distributary canals would govern the amount of flow delivered through the flumes. Since there would normally be several turnouts along a section of the branch and distributary canals, the canal depths at the point of turnout would govern the amount of flow at each. This degree of control is usually not sufficient.

The Khafagi and Indian type flumes have been considered for the Egyptian turnouts (6). These flumes are the open flume Venturi type with parallel side walls, raised bottom, and throat section which is constricted. The throat section is long enough to ensure that the controlling section remains in this throat for all discharges. The free flow relationship applies to a high degree of submergence. For all types of flumes, the crest is placed at 0.9 times the depth of water in the canal. With such a position, the outlet will draw an amount of water proportional to the available supply in the distributary.

Parshall measuring flumes and trapezoidal flumes have also been considered for the turnout function. However, only limited use has been made

PRELIMINARY

of open flumes as turnout devices because of lack of discharge control.

2. Pipe Outlets. There have been many proposals in Egypt to modify the original outlets to give better control of the irrigation flows. Both the upstream and downstream portions of the pipe outlets were modified with structures and orifice devices to better control and measure the flows. The downstream portion of the outlets was given attention to minimize the effect of pipe submergence on the discharge through the pipe.

El Madani (3) proposed a self adjusting weir as an addition to the upstream portion of the Dupuis pipe. A float system activates a set of vertical flaps which rotate to adjust the width of the intake and thereby control the discharge based on canal stage. The device which is shown schematically in Figure 5 can be installed in a structure on the upstream side of the present pipe.

El Darwish and H. Wahby (11) conducted tests and designed a system to regulate and measure the flow through irrigation pipe outlets. They studied and calibrated circular orifices with square shoulders in a thin plate. The orifices covered a size range of 10 to 20 cm. diameter, discharge range of 3.5-50 l/s and the study encompassed weir flow as well as orifice flow when depths were below or above the top of the orifice openings. The envelope line separating weir flow and orifice flow was determined. The orifice plate was then used in a structure constructed either on the upstream or downstream side of the pipe outlet as shown in Figure 6. It was recommended that the structure and orifice plate be used on the downstream side of the pipe outlet to insure an accurate measure of flow under a range of downstream water levels.

El Darwish and Nader (4) conducted laboratory studies in a flume equipped with series of field outlets having different pipe sizes and spacings to determine the flow characteristics of such a varied flow system. They determined the flow profiles along the laboratory channel with the variable spacing and size of outlets discharging, in order to show the extremely complex flow situation. Based on this and other studies their conclusions were:

PRELIMINARY

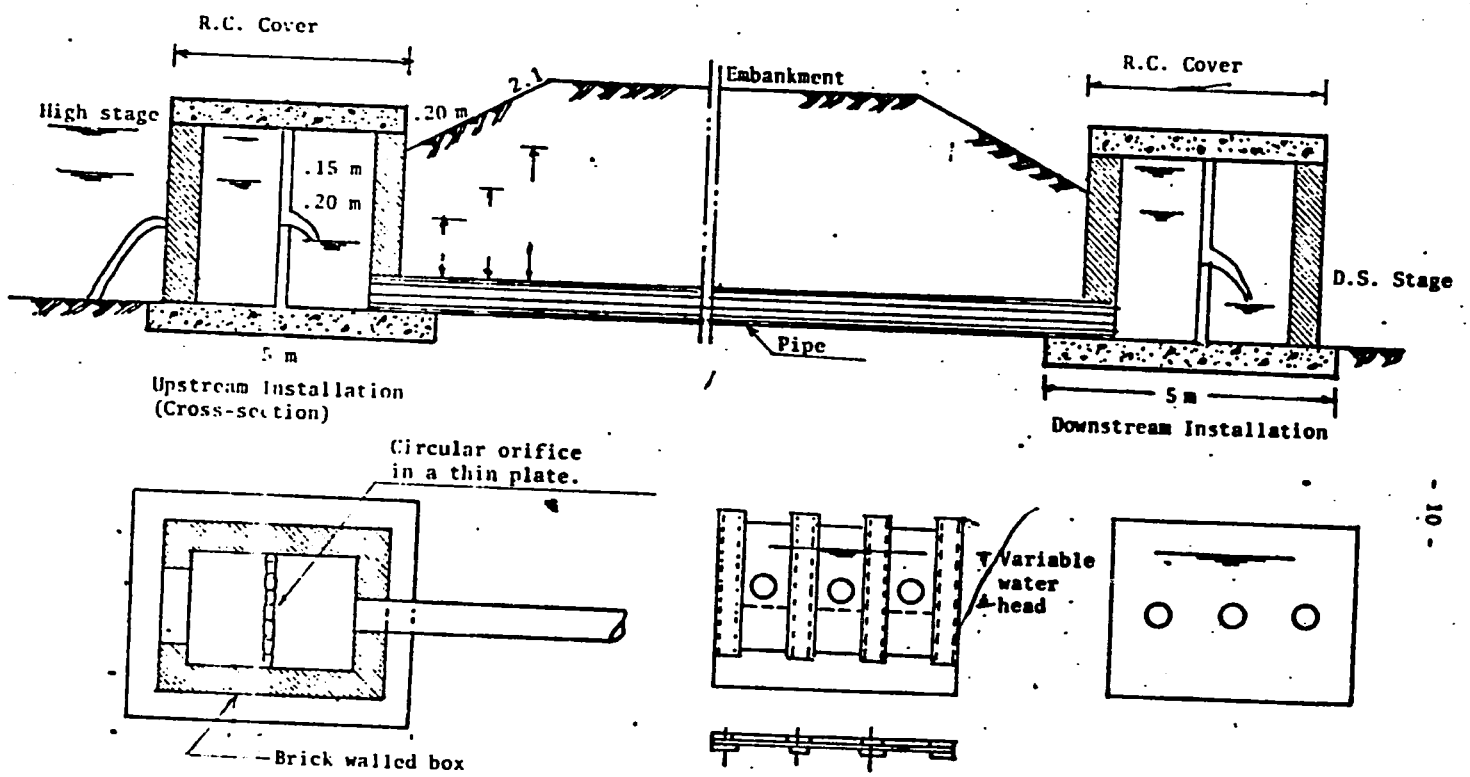

Figure 6: New Device for Accurate Measurement of Flow Used for Proper Distribution of Irrigation Water Built at the Pipe Inlet or Outlet. (11)

PRELIMINARY

1. Areas to be irrigated should be divided into equal areas.

2. The field outlets proposed by El Darwish and Wahby (11) should be used for best results.

3. For water users with small areas, a small structure with one orifice opening is used.

4. The outlets are adjusted with the size of irrigated area.

5. The openings can be adjusted for exact water requirements when the canal is used for the first time.

El Darwish and Nader (4) also present a comprehensive discussion of several other modifications that were proposed for the pipe outlets. The summary together with sketches of the devices as given by El Darwish and Nader (4) follow:

(a) Experiments Carried out by Hindmarch: In 1910, Hindmarch carried out some experiments on field outlets. He found that the discharge figures given in Dupuis table are 20% less than the accurate values measured in his experiments. He proposed a new design for the field outlets (shown in Figure 7) in order to prevent the effect of the downstream water level on the discharge. His proposal was to add an additional sill with the general dimensions of the sill and structure illustrated in Figure 7.

(b) Experiments Carried out by A. D. Butcher: In 1925, Butcher carried out many investigations on pipes having the same size as the prototype ones (Figure 8). He found that the discharge given by Dupuis were 20% less than his observations as Hindmarch had found. Table 1 was prepared based on Hindmarch's and Butcher's findings. It gives the area in feddans that can be

PRELIMINARY

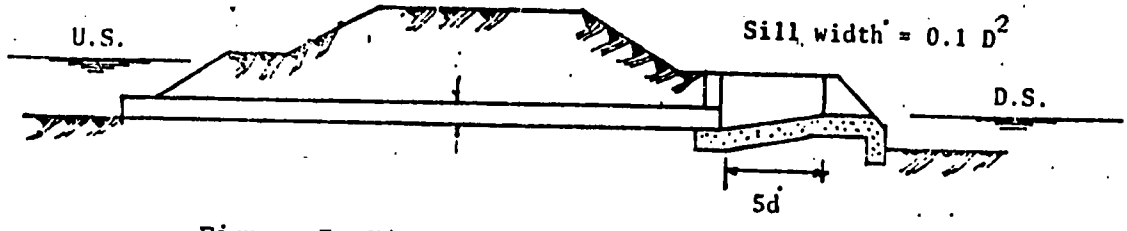

Figure 7: Hindmarch Proposal.

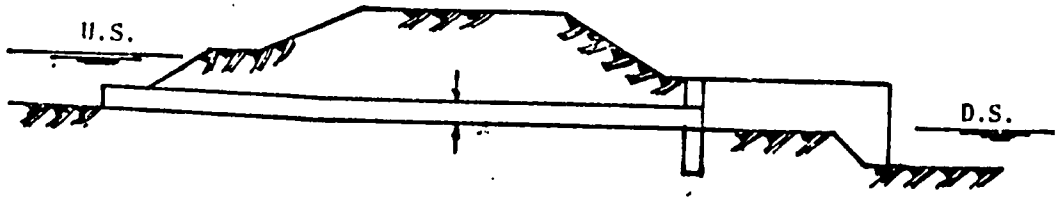

Figure 8: Butcher Proposal.

LIBRARY

irrigated with the indicated diameter and length of pipe for a constant head of 25 cm over the top of the pipe. A water duty of 50 cubic meters per feddan was used. Where the areas irrigated exceeds that stated in the table, the next pipe size is chosen. This means that pipe size is generally larger than the required.

It was stated that the total capacity of all the outlets on a channel often exceeds the design maximum discharge of the channel itself by 50 to 60 percent, and may rise to 100% if allowance for silting is given. It was stated that under this system, "it is hardly surprising that difficulty is often experienced in getting water to the tail of canals; and a more equitable means of distribution is obviously desirable."

(c) Suggestions Offered by Dr. Hassan Zaki: In 1953 Dr. Hassan Zaki suggested the following points:

1. The use of a new table to get discharge values for all pipes diameters 10, 11, 12 ..... up to 40 cms, also for diameters 40, 42.5, 45 ..... up to 100 cms.

2. The discharge values of the suggested table (table 1) are accurately calculated from the experimental work results.

3. The branch canals be divided into three reaches:
   - In the first reach the pipes are installed with its upper edge 25 cms below the summer level.
   - In the second reach the pipes are installed with its upper edge 30 cms below the summer level.
   - In the third reach the pipes are installed with its upper edge 35 cms below the summer level.

4. Distance between pipes should not be less than 200 meters.

PRELIMINARY

5. Pipe length should not be less than 10 meters.

Dr. Zaki also suggested the field outlets shown in Figure 9. He stated that this type of structure could be used for both types of irrigation, that is, gravity and lift irrigation.

(d) Suggestions Offered by Mr. Zakaria Dawood: In 1954, Mr. Zakaria Dawood offered a new design for the field outlets as shown in Figure 10 which is partially an open flume outlet. He used the long broad crested weir. He put some conditions for the validity of using the new design as follows:

- Water duty for both canal and field outlet should be the same whatever the water level may be.
- In the first reach of the canal, the outlets should be put at equal depths from the water surface level.
- Outlets should be put at enough depths to assure flow in case of low water levels.
- Outlets should not be affected with the tail water levels.

- Outlet diameters should be accurately designed according to the area irrigated.

(e) Experiments & Researches Carried out by the H.R.E.S., Delta Barrage: An outlet model of scale 1:1 was constructed in 1959 in the Hydraulic Research Station, for the purpose of studying field outlets. The following studies were carried out:

1. Calibration of field outlets.
2. The effect of the tail water level on the discharge.
3. The effect of constructing a shaped floor downstream of the pipe outlet.

PRELIMINARY

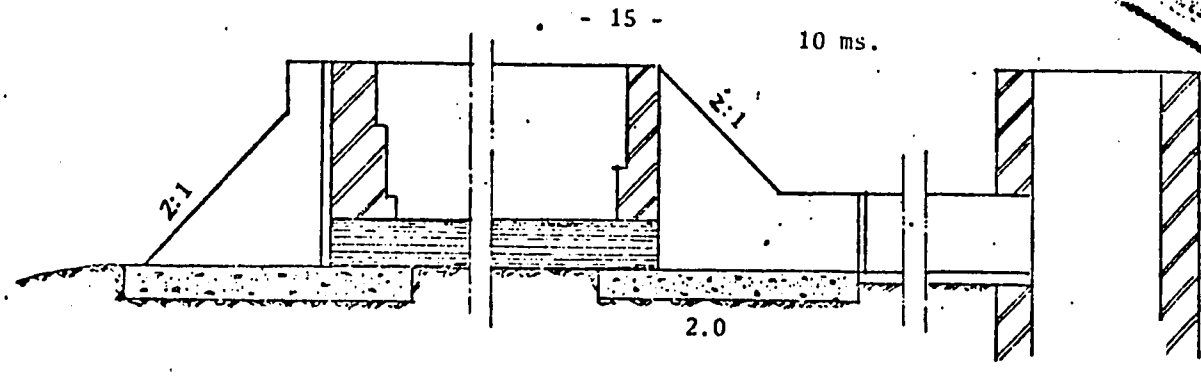

Water duty corresponding to low stage
= 50 m^3/feddan/day

Water duty corresponding to high water
= 60 m^3/feddan/day

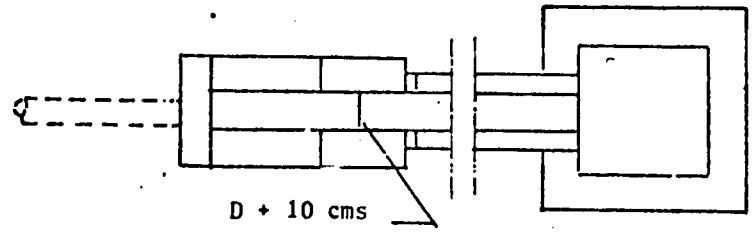

Figure 9: Suggestion Offered by Dr. Hassan Zaki

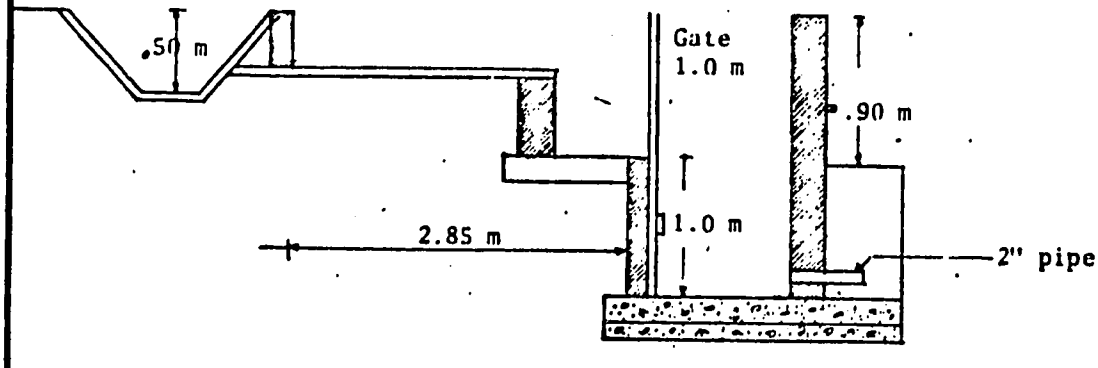

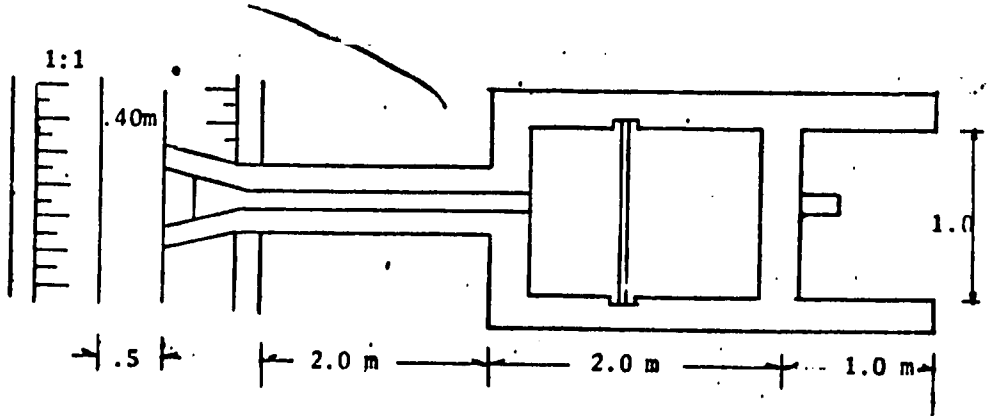

Figure 10: Field Outlet suggested by Zakaria Dawood

PRELIMINARY

The following results were deduced:

- The discharges given by Mr. Butcher are more accurate than that given in the Dupuis table.

- The tail water level affects the discharge to a great extent; i.e., if the downstream water level is lower than the design level, the discharge of the pipe can be increased.

- The experiments showed that if the floor length of the downstream section is increased, a hydraulic jump is created.

(f) Suggestions Offered by Mr. Hashim & El Kadi: In 1968 Mr. Hashim and El Kadi offered the following suggestions:

1. The use of the opening designed by Dr. Hassan Zaki.
2. The irrigation canals should be divided into three reaches,

- The first reach in which the pipes should be placed at 25 cms below the water surface.

- The second reach in which the pipes are placed at 30 cms below the water surface.

- The third reach in which the pipes are placed at 35 cms below the water surface.

3. A new table for the openings has to be made taking into consideration the pipe diameter with respect to the actual discharges.

(g) Solution Suggested by Mr. El Darwish: To avoid the disadvantages of the present (turnout) openings, Mr. El Darwish suggested the new device (11) developed by Dr. H. Wahby which consists of a

PRELIMINARY

closed brick-walled box divided by a thin steel orifice plate. This installation could be constructed either upstream or downstream of the existing pipe as shown in Figure 6. The steel plate is provided with several circular orifices according to the required discharge and should be adjusted to the proper water levels which gives the required amount of discharge. The advantages of this turnout were given as follows:

1. The device can be constructed either on the upstream side or the downstream side of the pipe depending on the field conditions.
2. The head on the orifices can be easily adjusted.
3. The discharge does not depend on the pipe diameter or the upper edge of the pipe.
4. The number of orifices can be chosen according to the required area to be irrigated.
5. The device can be easily calibrated with great accuracy.
6. The new device can be easily added to the existing (pipe) openings with no appreciable changes.

Nicola (6) proposed modifications to improve the delivery of water using the pipe outlet. He conducted calibrations on different lengths of 10-inch pipe over a range of upstream and downstream water levels. He proposed modifications that included sloping the pipe upward to insure a free-flow condition at the pipe outlet. He also developed a procedure for setting the elevation of the pipe entrance, based on the maximum operating water level in the canal. The field outlets for maximum demand for any reach of canal are set on a line parallel to the water surface and at a level higher than the bed level by 0.61 of the design water depth.

The new orifice device proposed by Attallah (5) is essentially a series of Venturi orifice tubes fixed to a plate and mounted above a sill. The sill and orifice plate are between two vertical walls. It is stated to be a metering and control device suitable when water is supplied on a

PRELIMINARY

volumetric basis. The orifices have a bell mouth and the shape of a venturi tube. The number of orifices would vary depending on the magnitude of flow which in turn depends on the area to be irrigated. Individual shutters are used for closing the entrance on the orifices. Figure 11 shows this design of outlet, which can apparently be used with a structure in conjunction with the pipe outlet. The author (5) gives several advantages as: low head loss; high coefficient of discharge; no leakage when closed; accurate flow measurement; requires little maintenance; and is a cheap device.

A recent study (12) at Cairo University was made to calibrate the orifice device proposed by Attallah (5). This study is a calibration of Venturi tubes under a full range of operating conditions. The study does not adapt the device to the field situation or explain how it is to be used as a field outlet.

Another proposal for improvement of the pipe outlet utilizes an orifice plate in the pipe as shown in Figure 12. With the orifice in place, the pipe in downstream section flows partly full for a wide range of flows. Some advantages given are: no effect of length or friction of pipe on discharge; gives constant discharge; no downstream effect on discharge; is self cleaning; shape of entrance or exit does not effect discharge; and pumping on the downstream side does not change the discharge.

3. Weir Outlets. The Fayoum Weir is used as an irrigation turnout in the Fayoum Province, Egypt. The weir is particularly adapted for use where there is an ample slope and head available (2). Shown in Figure 2 is the common type of Fayoum weir for discharge through a pipe. A similar structure uses the same weir crest configuration with discharge directly into a ditch section without the pipe section. The weirs are generally used with a free overfall but can also be used under downstream submerged conditions. The widths of the weirs are variable with the width usually determined by the water demand of the area to be served. Historically the weir has been constructed with masonry and more recently with precast concrete blocks.

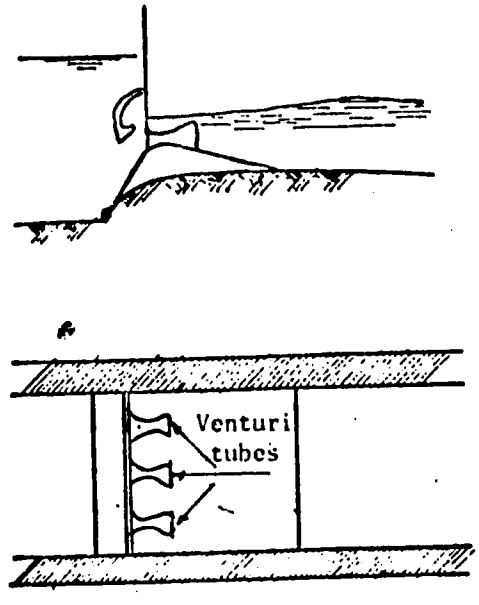

Figure 11: New Orifice Module Intake (5).

PRELIMINARY

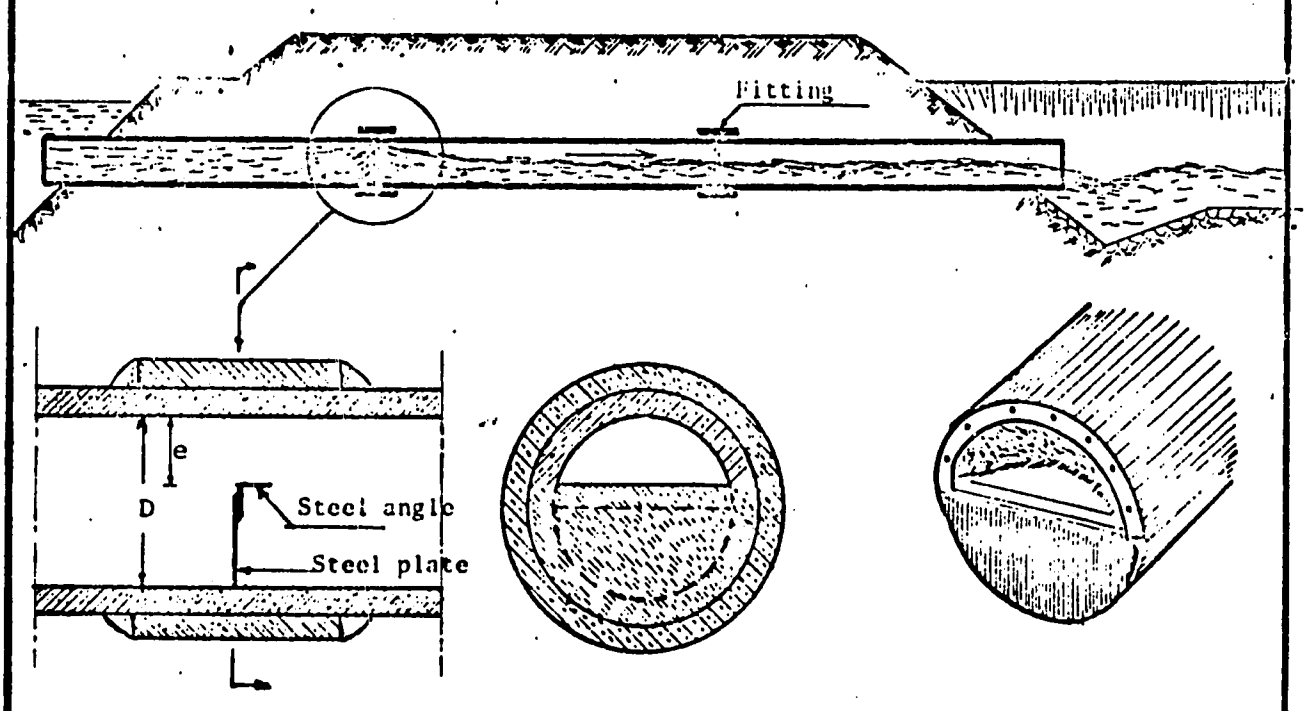

Figure 12: Pipe Outlet with Orifice Plate (13)

PRELIMINARY

Advantages listed for the Fayoum Weir include:

a. Size is easily determined based on the area to be irrigated.

b. Discharge measurements can be determined with a probable accuracy of one percent. Discharge measurements are also possible under submerged flow conditions.

c. The velocity of approach may be neglected.

d. The downstream conditions do not affect the discharge provided the downstream slope of the weir bottom is about one-half to one.

4. Other Outlets. The Neyrpic Modular Outlet has been used to a limited extent in Egypt as a turnout, with moderate success (5). The device can control the flow by raising different modular segments as shown in Figure 13. Flow regulation in 10 l/s increments is possible and simple to make. The device will operate under low heads and the loss of head through the outlet is minimal. In order to operate correctly, the water level in the canal needs to be held within narrow limits. There is some water leakage through the outlet when closed. The device is relatively expensive to purchase but could be easily made in Egypt.

V TURNOUTS AND OUTLETS FROM OTHER COUNTRIES

There are many designs of turnouts and outlets in use throughout the world that could be considered for adaption for the Egyptian problem. One desirable feature of the turnout would be the ability for measurement of the flow since, for efficient utilization and division of water, this feature is becoming increasingly important. Most of the outlets now in use require the water measurement function as a separate structure. Many, however, have been calibrated so that the flow can be determined within

PRELIMINARY

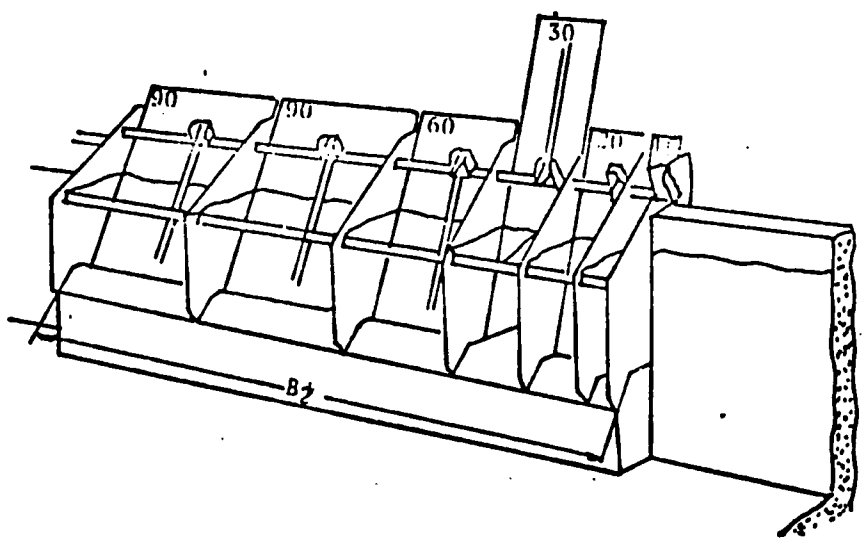

Figure 13: Upstream View of Neyrpic Distributor type XX/300 (2)

BIBLIOTHEQUE

broad limits. Canal or pipe gates attached to pipe conduits which extend through the canal bank are the most common of turnouts used throughout the world. The following discussion covers several turnouts that may have application to the Egyptian situation, both for use from the branch and distributary canals to the meska and also for direct water releases from the canals to a private lift device.

Open Flume Outlets -- The flume outlets are widely used in India and Pakistan (2) and the Fayoum outlet previously discussed is in this category, Fig. 14. They usually have a venturi shape with a contracted upstream section and a gradually expanding downstream section. The structure is usually of brick masonry construction with the throat bottom and sidewalls made of steel plate to prevent tampering. There is a gage mounted on the upstream side of the structure to observe the depth and discharge. The structure is said to be very durable with a long service life. It can be adjusted by dismalting one side wall and then either raising or lowering the crest and reducing or increasing the width of the throat by rebuilding the sidewall. A roof block is sometimes used in the flume outlet for contraction. This device enables the open flume to start working as an orifice as soon as the supply level in the parent canal is above the bottom of the roof block. The device can be used as a measuring flume by applying a standard flume-type discharge equation together with an orifice equation. Figure 15 shows pipe turnouts combined with open flumes. This general design of turnouts is not recommended for Egypt because they are difficult to construct, are sensitive to small fluctuations in canal or water level, and there is not direct control of flow through the structure.

Pipe-Type-Outlets -- There are a multitude of pipe-type outlets in use throughout the world in addition to the Egyptian designs previously discussed. Many of them have no upstream control other than the water depth in the canal. They operate by taking a proportional amount of the flow available. Many of these designs have been made very complicated, mostly to control the downstream conditions, as shown in Figure 15. These

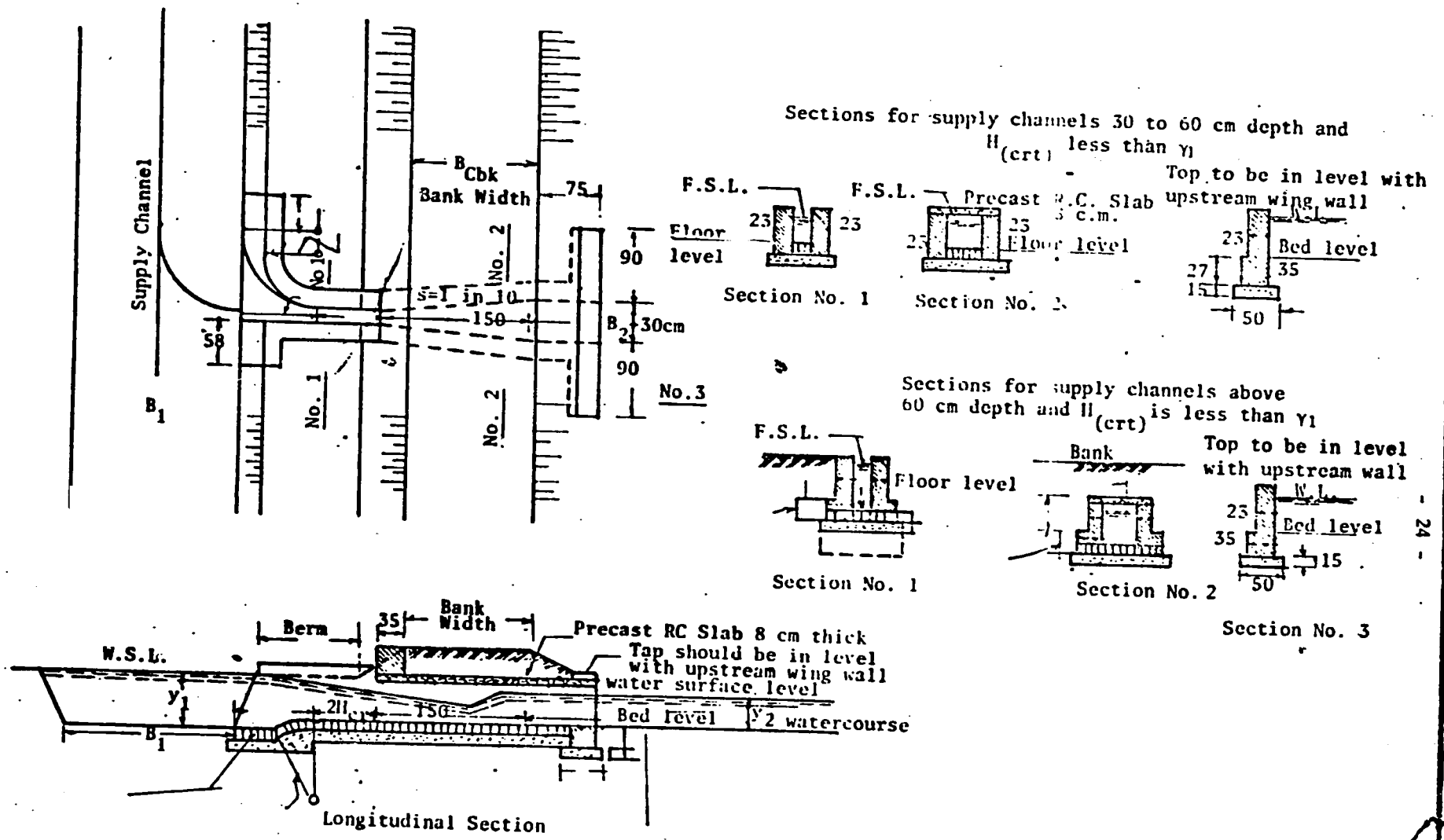

Figure 14: Open Flume Farm Outlet (2)

PRELIMINARY

PRELIMINARY

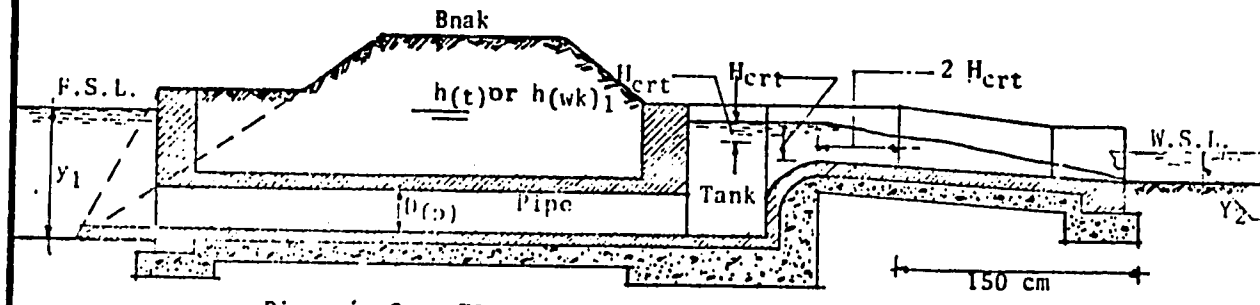

Pipe-cum-Open Flume

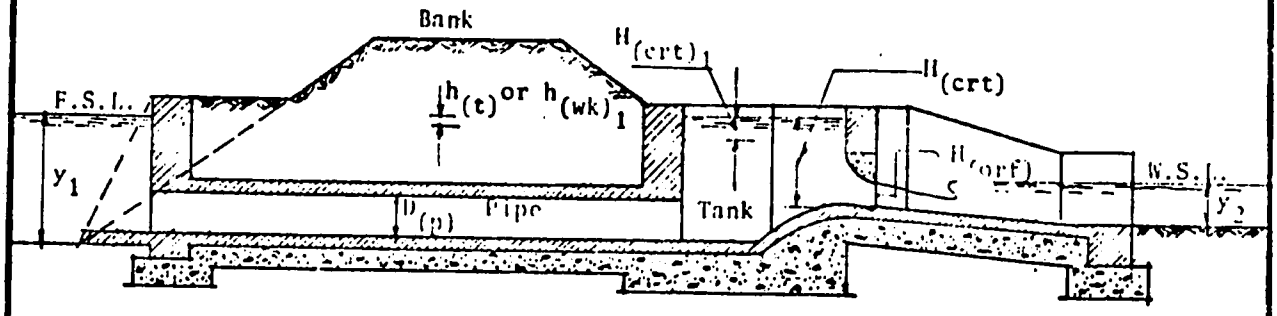

Pipe-cum-A.O.S.M.

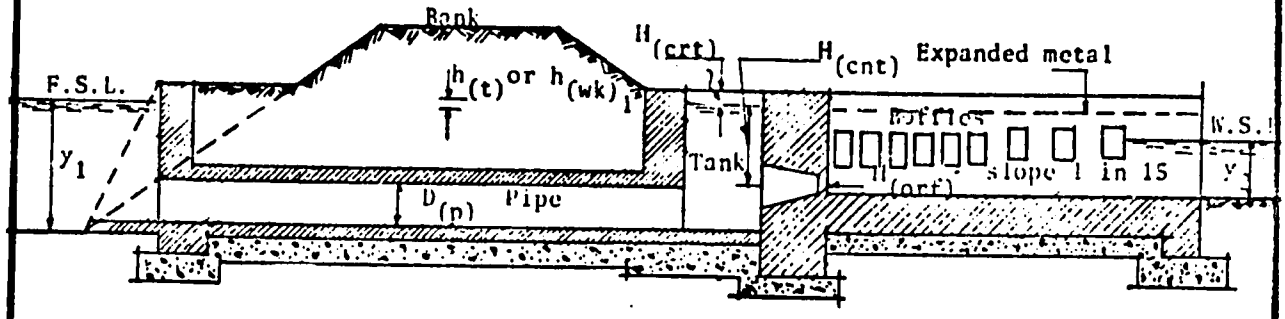

Pipe-cum-Jamroo Type Orifice-Semi-Module.

Figure 15: Three Types of Pipe Semi-Module Turnouts (2)

PRELIMINARY

designs are not recommended at this time because of complicated and difficult construction and no direct control of the flow.

Canal gates attached to pipe outlets are the most common type of turnout used in the world, Figure 16. The turnout canal gate is attached to a concrete or masonry headwall with the discharge pipe protruding through the canal bank into the intermediate canal or farm ditch. Usually the turnout gate is a part of a check structure in the main canal and is located immediately upstream of the check. The head gate plate may be rectangular or circular in shape and when closed, seat against a metal collar for a minimum of leakage. The plates move in channel iron guides and frames so that they can be opened to any degree desired. The head gate plate is actually an adjustable orifice since it is attached to a threaded rod with handwheel control or a handle-stem with numbered uniformly spaced holes. The head gate plate can be set at a desired orifice opening by a pin set in one of the holes or by measuring the rise in the threaded gate stem. Many of the commercially available canal gates have been calibrated for metering the turnout flow. With the discharge end arranged so that the pipe flows full, head readings are determined upstream and downstream from the canal gate using attached stilling wells.

One pipe-type turnout in use in the U.S.A. and other locations is the meter gate which can be used both as a turnout and a measuring device, Figure 17. One of the stilling wells is connected to the water in the canal and the other to the pipe, downstream from the gate. The difference in water levels in the two wells and the gate opening is measured and the discharge obtained from tables prepared from calibrations. The initial cost is low compared to other turnout-measuring devices, particularly because it combines features of regulation, shutoff and measurement. However, periodic observations and manual adjustment are necessary and changes in either the upstream or downstream water levels alter the rate of flow (8).

Concrete pipe outlets with a gate control are shown in Figure 18. These can be used for either a lined or unlined ditch. If lined, the

PRELIMINARY

PRINT POOR QUALITY

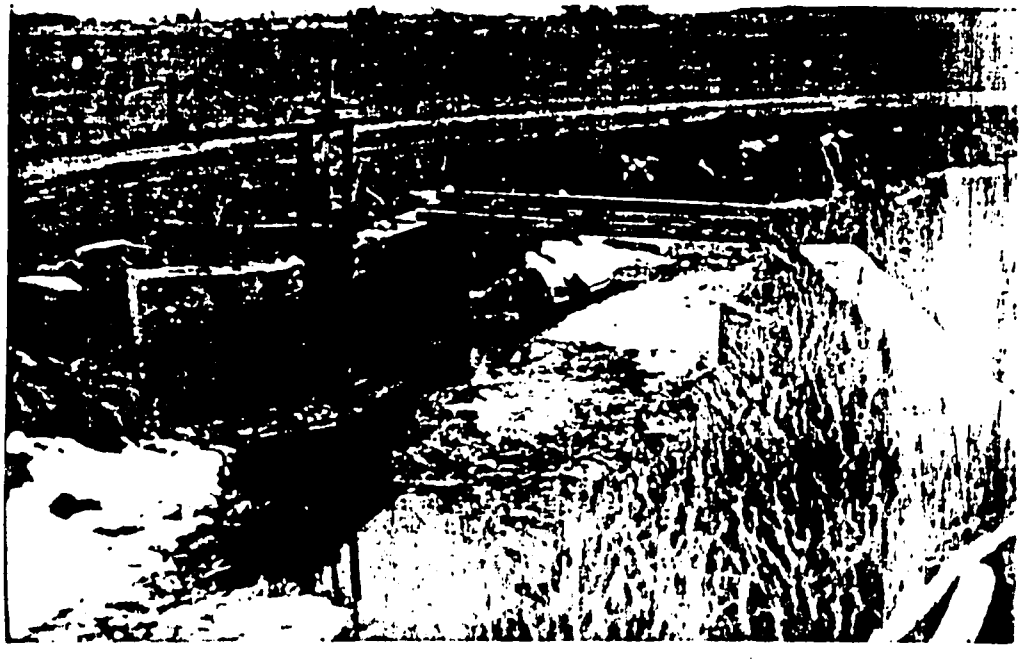

Figure 16: Canal Gate

PRELIMINARY

PRINT POOR QUALITY

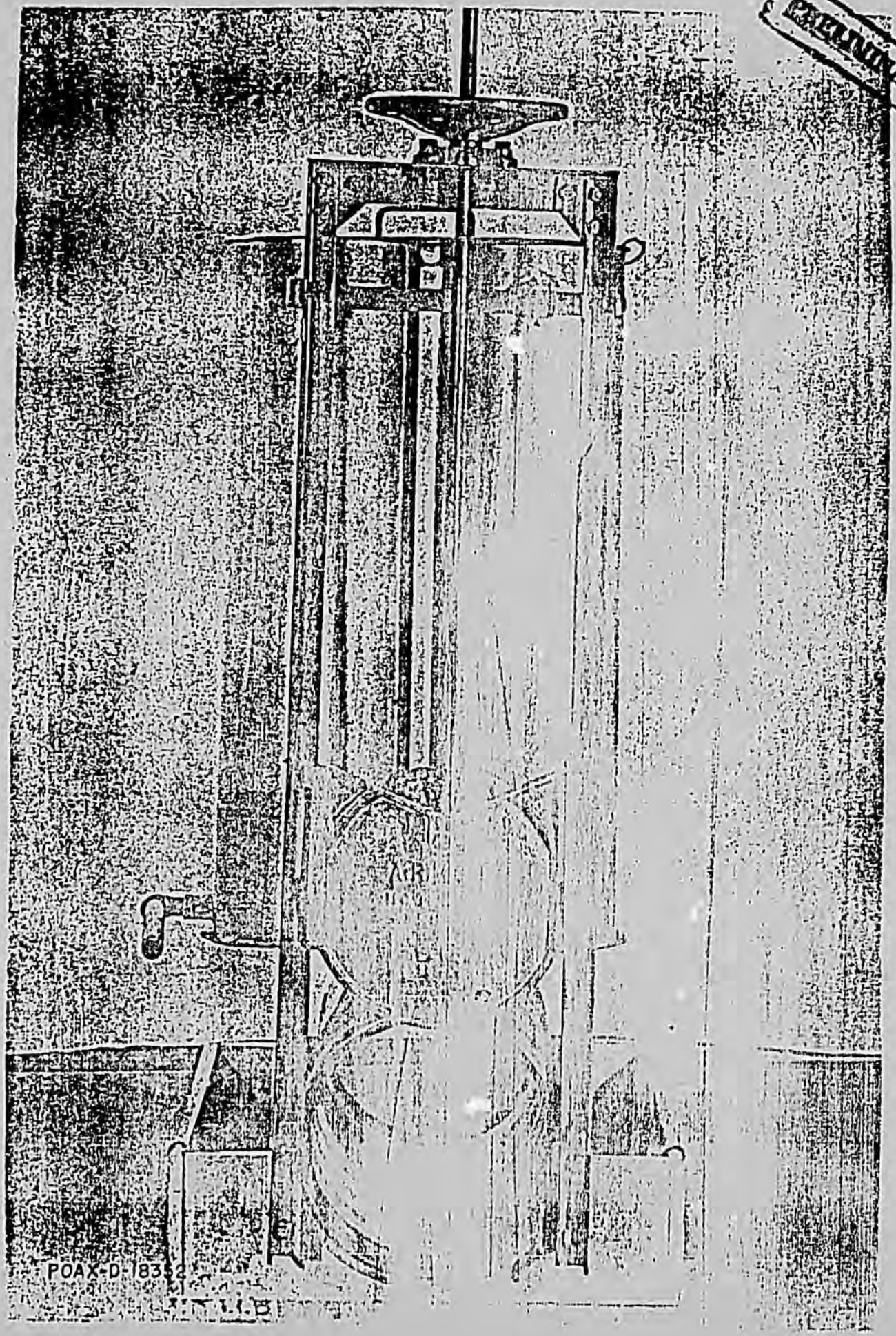

PRELIMINARY

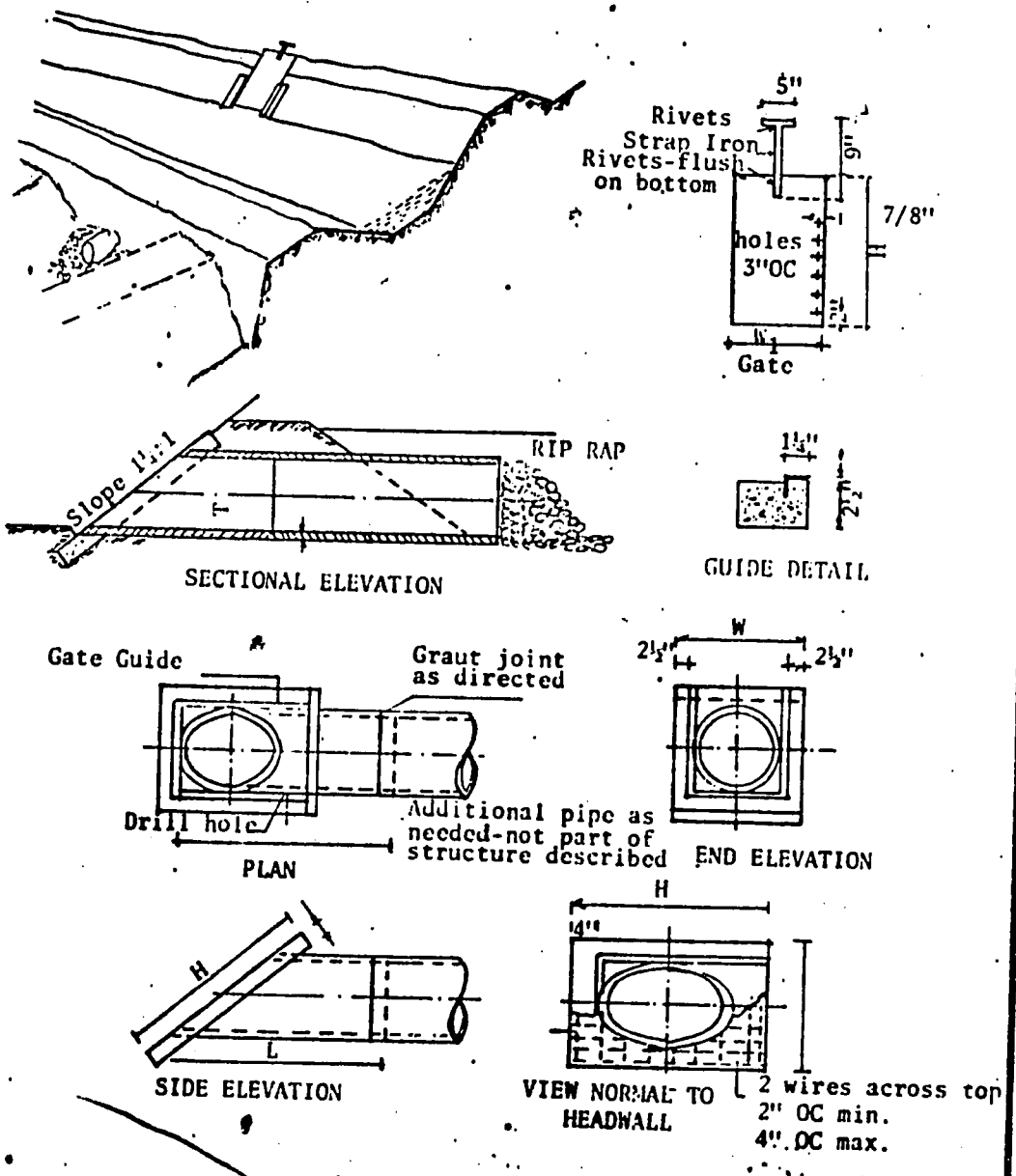

Figure 18: Concrete Pipe Turnout (7)

PRELIMINARY

pipe is grouted (cemented) in a hole in the lining and the gate guides are attached to the lining. If the ditch is not lined then a concrete frame is constructed as shown in Figure 18 with the pipe and gate frame attached. Usually, the frame and gate are placed vertically for the unlined ditch. It may be necessary to place a structure on the downstream end of the pipe turnout for erosion control. For the 15 cm (6 in.) diameter pipe with a length of 91 cm (36 in.) the discharge will range from 20 to 28 l/sec. (0.7-1.0 cfs) depending on the water depths. These outlets and similar designs have been widely used and are recommended for many uses. However, water measurement is usually accomplished using a separate structure such as a measuring flume.

Constant Head Orifice Turnout -- The C.H.O. turnout is used both for regulation and measurement of flow (9) and has been installed in canals, laterals and farm ditches, Figure 19. The operation is manual. Calibrations and plans have been prepared for a range of sizes. For operation, the upstream gate is set at the required opening, as shown by a rating table, to deliver a desired quantity. The downstream gate is then regulated until there is a 0.2 foot (6.1 cm) differential head across the upstream gate as indicated by staff gages. The initial cost is high, primarily due to the construction difficulties. Any change in the water surface level in the canal or downstream channel changes the measurement. Periodic regulation and observations are necessary.

Trapezoidal Panel Outlets -- The trapezoidal outlets are commonly used in Spain and Pakistan (10) and are shown in Figure 20. They are precast from concrete and easily inserted in the ditch bank by the farmer. Forms are used for casting both the panel and the lid so that the two fit closely together. Outlets of variable heights can be constructed. The outlets do not have an adjustment for variable openings, being either fully open or fully closed. This feature is not desirable for most systems. It is reported that they are also subject to excessive leakage.

Circular Panel Outlets -- The outlets have been recently developed and are wisely used in Pakistan, Figures 21, 22, (10). The outlets are

PRINT POOR QUALITY

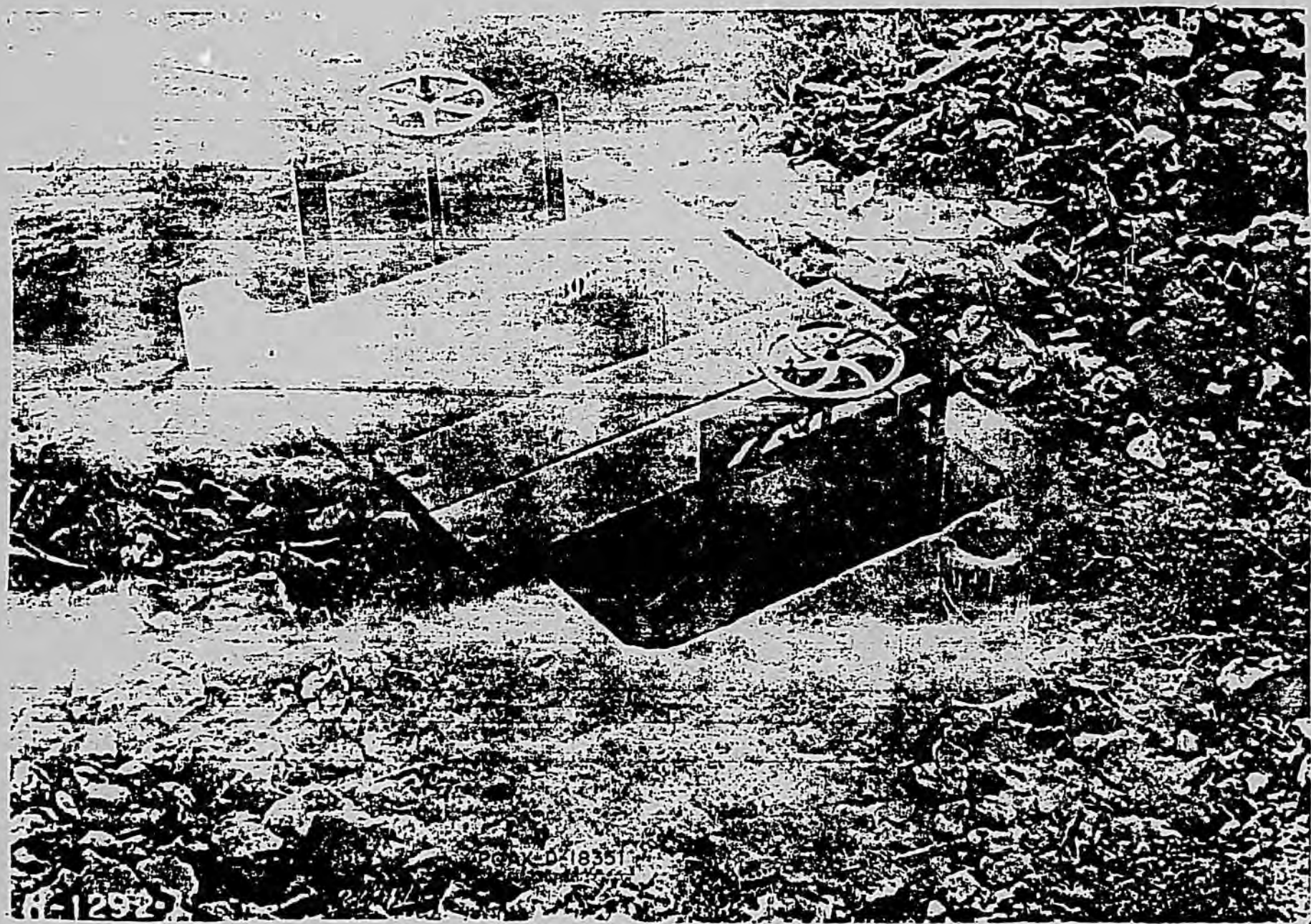

Figure 19: Constant Head Orifice Turnout.

PRELIMINARY

PRELIMINARY

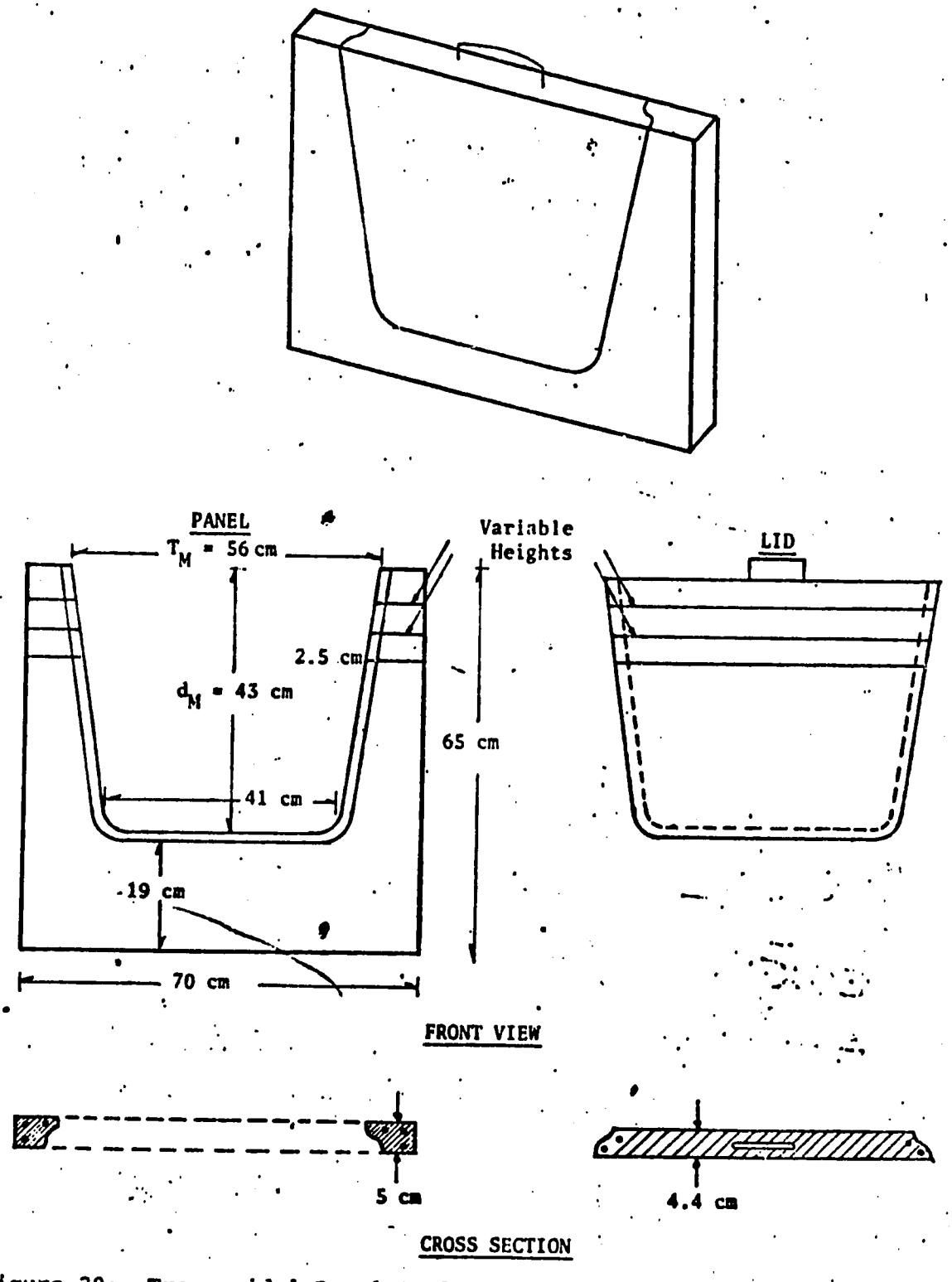

Figure 20: Trapezoidal Panel Outlet (10)

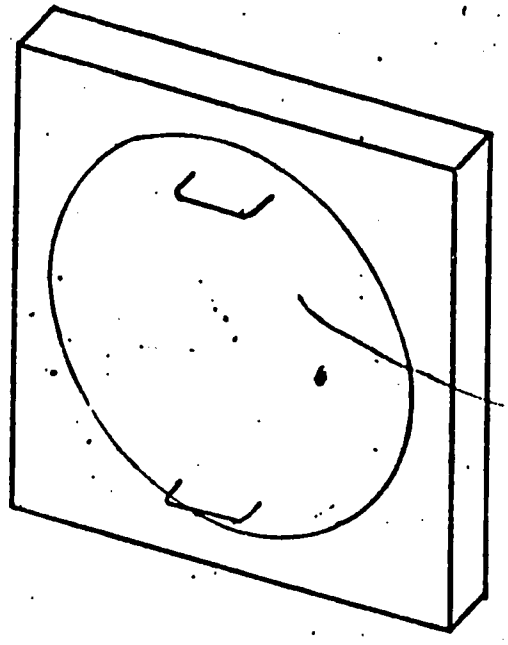

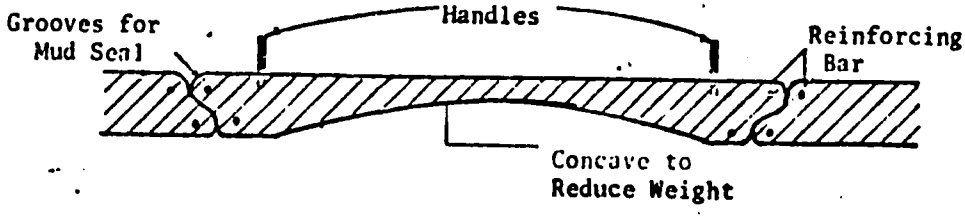

Cross Section

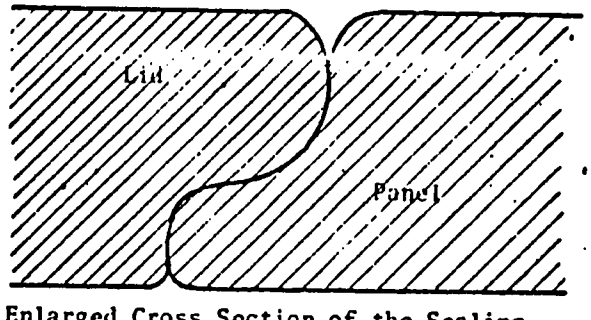

Enlarged Cross Section of the Sealing Surface

Figure 21: Concrete Orifice Panel Outlet (10)

PRELIMINARY

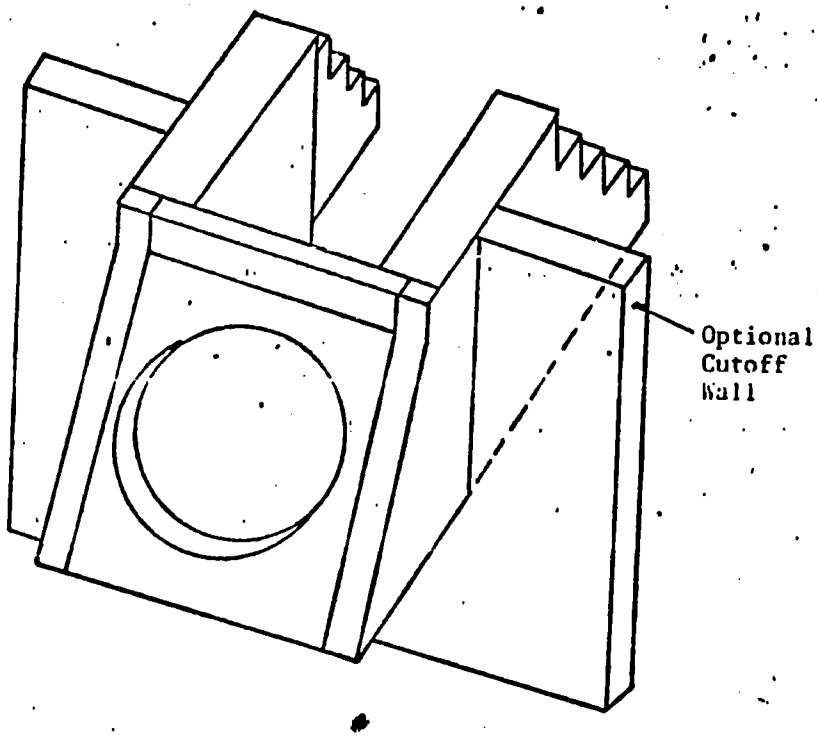

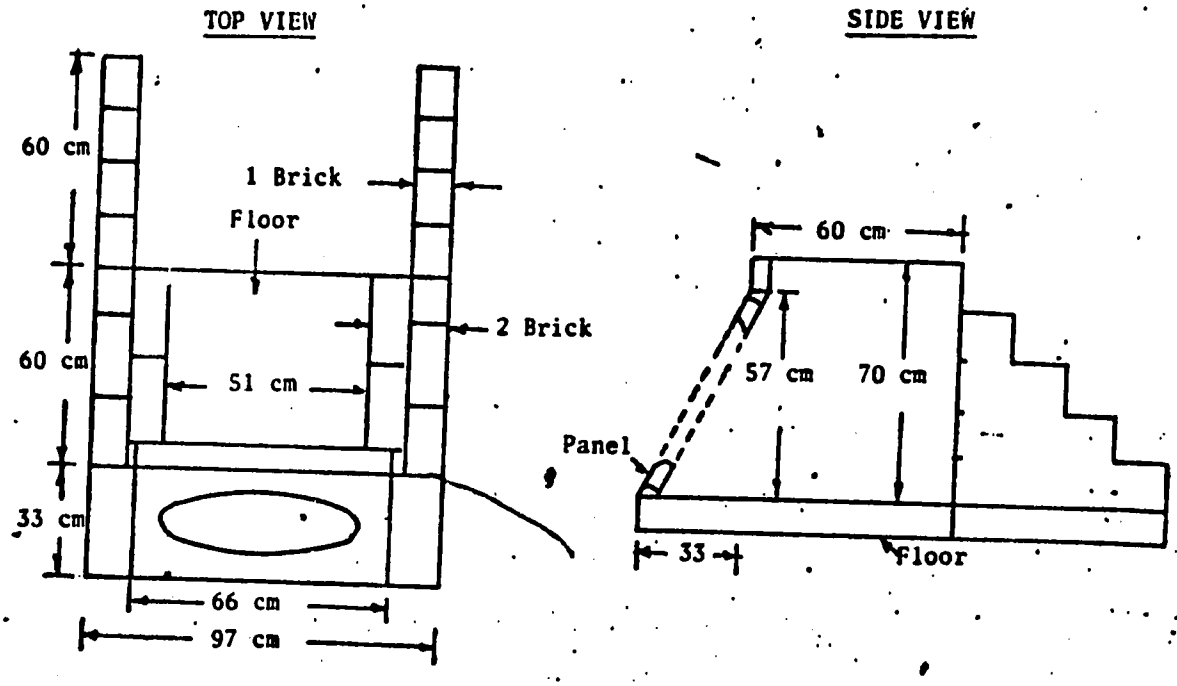

Figure 22: Brick Masonry Installation for Panel Outlets (10)

PRELIMINARY

used with the gates fully opened or closed which is particularly adapted to the Pakistan system. Irrigation water is rotated to each farmer on Pakistan watercourses on a weekly basis. Consequently outlets from main to branch canals are used frequently. The water is seldom divided, so gates do not need to regulate flows -- only to direct it. Field sizes are small, and thus the conveyance system is extensive, requiring numerous branch outlets along the main channels.

Because cement, sand and bricks are readily available and local craftsmen are talented in constructing masonry structures, the outlet structures are adapted to fit the local needs. The circular panels and the gates are cast using steel molds that are constructed locally. After casting, the lids are seated into the panels by turning the lids thereby assuring a tight fit and relatively leakproof. Most of the structures are brick masonry and are constructed in place as shown in Figure 22.

For installation, the soil replaced around the structures needs to be carefully compacted to prevent washouts. Soils replaced should be moist when placed and compacted in layers. A hand tamper should be used. For most installations a cutoff wall is probably not needed. However since water leakage around structures is a major problem, care should be excercised to prevent the loss.

Other Turnouts -- There are many other designs of turnouts in use in the world and many have features that may be usable in Egypt. However, those previously reviewed in the foregoing section have the most desirable features. Section 5 of the FAO, UN publication on small hydraulic structures (2) gives a large number of outlets and farm turnouts.

VI PROBLEMS TO BE SOLVED

The problems to be solved so that outlets, under the Egyptian situation, can give good water distribution are:

PRELIMINARY

1. The farmers on the upper reach of the canals receive more water than those on the lower reaches due to the present system and design of outlets.

2. The farmer can easily obtain more water than his share by lowering the water level at the end of the pipe outlet. The official tables of discharge are actually based on a 25 cm water depth over a submerged pipe 10 m long. The 25 cm head is taken from the top of the pipe.

3. The Dupuis design for canal section which insures a small difference between H.W.L. (high water level) and L.W.L. (low water level) are not followed. A difference of 50 cm between H.W.L. and L.W.L. can exist.

4. The occassional growth of weeds as well as sedimentation changes the water profile in the distributary canals which will effect the discharge of the outlets.

5. Increment change for pipe outlet's diameters, in the official tables, are 5 cm which means for an area served of 67 feddans the pipe diameter will be 25 cm, as well as for 111 fed., although for an area served of 65 feddans, the pipe diameter will be 20 cm. This results in more discharge than the recommended area needs. This also means more area allotted to a group of outlets on a canal than the area served by the canal itself (the design canal discharge).

6. Different materials for pipe outlets are used such as, new or old concrete pipes, iron or steel pipes. Thus, different roughness for the pipes and different losses need to be considered

7. Water measurement needs to be included in the design of the turnouts.

PRELIMINARY

8. Direct control of the flow using a simplified gate is needed.

VII PROPOSAL FOR IMPROVED DESIGNS

Under the present irrigation system, branch canal water deliveries are made, usually on rotation, based on the amount of water available. Generally, there is no actual water measurement practiced on the branch canals and meskas. Water measurement is needed particularly at the meska inlet, and this would entail measuring flumes or some other measuring device installed at each inlet. A combination turnout and measuring device would be highly desirable and should be developed if possible.

The turnout should be of the submerged orifice type and the Dupuis pipe with modifications can be used. The orifice is less sensitive to changes in flow depth upstream than a weir or flume type structure. As an example, the flow for an orifice varies as the depth to the one-half power; depth to the three-halves power for rectangular weirs and flumes; and depth to the five-halves power for the vee and trapezoidal shaped weirs and flumes.

Checks should be considered for the branch and distributary canals in order to stabilize the water depths. These checks could be made permanent and without movable checkboards so that they could not be raised or lowered by unauthorized persons. Canals on very flat grade may not require checks but, in these cases, installing the outlets at increasingly deeper depths with distance along the canals, relative to the operating water depths, might be considered.

There are several other constraints regarding the irrigation outlets that need to be considered. Mechanical cleaning of the branch and distributary canals make it mandatory that obstructions in the canals be kept to a minimum. This requires that there be not projecting structures or gates on the upstream end of the outlets. Because of problems in tampering or destruction of canal and ditch gates, which can be easily opened

or damaged, it was suggested that these gates not be considered. If used, the gate valves must be simple ones that can be locked.

Stabilization of the downstream flow conditions for the turnouts was desired. With the original Dupuis pipes, a range of tailwater conditions were usually encountered which changed the discharge for a constant upstream canal water depth. The original calibrations for the Dupuis pipes were made with the pipe exit completely submerged. However, the usual flow conditions for the pipes and partially or completely free flow. Also the farmers have noted that they can obtain more water by lowering the ditch and thereby lowering the water surface at the pipe outlet. The structures must also be cheap and easy to construct and install.

After study of past experience with Egypt turnouts, considerations of the irrigation systems, examination of turnouts from other areas and the particular Egyptian needs, three outlet designs are proposed. All of these designs use the original pipe outlets as a base and suggest additions that will improve the control, distribution and measurement of the water. The other design uses a separate structure. It is recommended that the turnouts be tested at full scale at the Delta Barrage Laboratory and simultaneously be constructed and observed in the Mansouria District through the work of the Egypt Water Use and Management Project.

(1) Pipe Outlet with Orifice Box - El Darwish and H. Wahby (11)

Details of the irrigation turnout proposed by El Darwish and H. Wahby are shown in Figure 6. The standard pipe outlet is preceded by a small masonry intake structure which may not be necessary for all uses. The masonry downstream structure contains the orifice plate which can be made with 0.6 cm thick steel. The orifices have square edge openings which should be machined circular. The masonry structure has an opening into the downstream canal or meska of necessary size so that the orifice flow is free on the downstream side. The orifice size and number is determined based on irrigation requirements and orifice calibrations previously conducted. (11)

PRELIMINARY

Flow measurement is accomplished using a staff gage and/or stage recorder mounted in the upstream portion of the orifice box to measure the depths. The orifices have been calibrated to measure orifice flow, as well as weir flow if the water level is below the top of the orifices. The transition from orifice to weir flow has been determined (11).

(2) New Orifice Module Intake - Attallah (5), Baz (12)

The intake proposed by Attallah is a control and metering device to be installed as an intake for distribution canals as well as farm outlets, Figure 11. It consists of one or more Venturi shaped tubes equipped with bell-shaped mouthpieces. The tubes have very low hydraulic losses and will pass more flow for a given head than the same diameter of square edged orifice. The tubes can be closed using a simple shutter over the entrance. The tubes are fixed to a 0.6 cm steel plate and mounted above a sill. The plate and tubes are mounted between two verticle walls made of masonry or concrete.

The flow measurement is accomplished using a staff gage or stage recorder mounted upstream from the tube installation. Different sizes of tubes have been calibrated (12).

(3) Improved Egyptian Pipe Outlet - Robinson and El Kady.

...sign of the improved pipe outlet is given in Figures 23, 24, and 25. This outlet has a 20.3 cm inside diameter and 5 m length. The upstream end of the outlet has been placed into the ditch bank in order to minimize obstructions for mechanized ditch cleaning. The downstream end has a constructed elbow to standardize and stabilize the flow at the pipe outlet. With the design, the downstream depth may vary over a large range without affecting the discharge. The discharge will only be changed if the downstream level is above the elbow outlet.

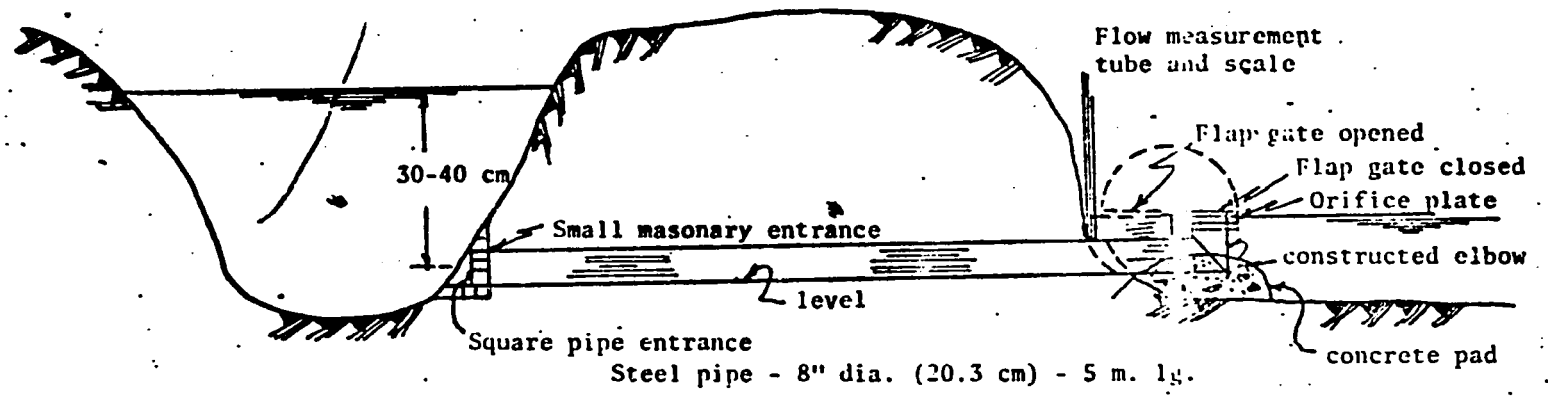

Note: Laboratory calibration with orifice plate is necessary.

Figure 23: Improved Egyptian Pipe Outlet with Pipe Orifice and Flap Gate.

PRELIMINARY

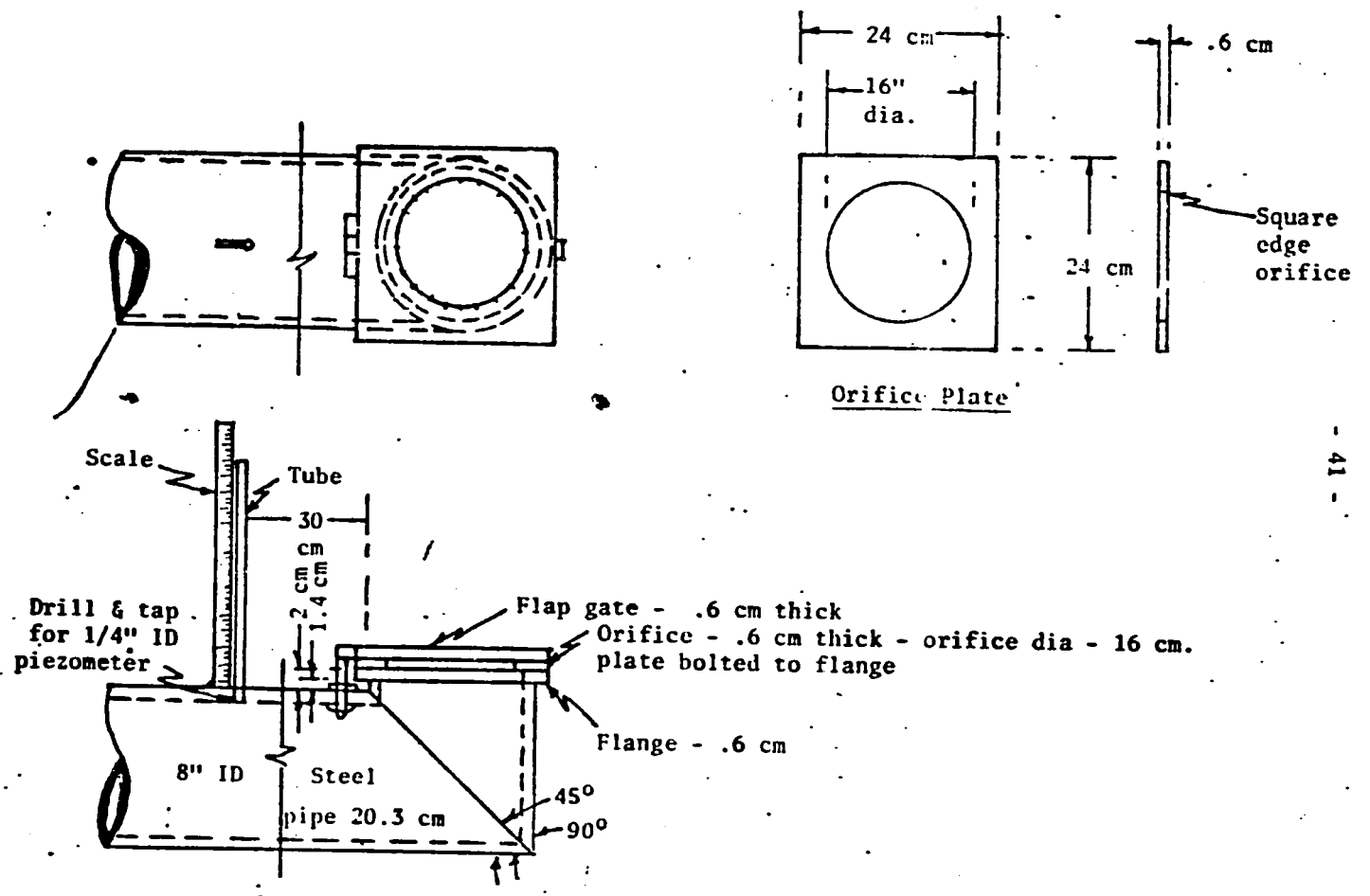

Figure 24: Elbow and Orifice Plate for Improved Egyptian Pipe Outlet.

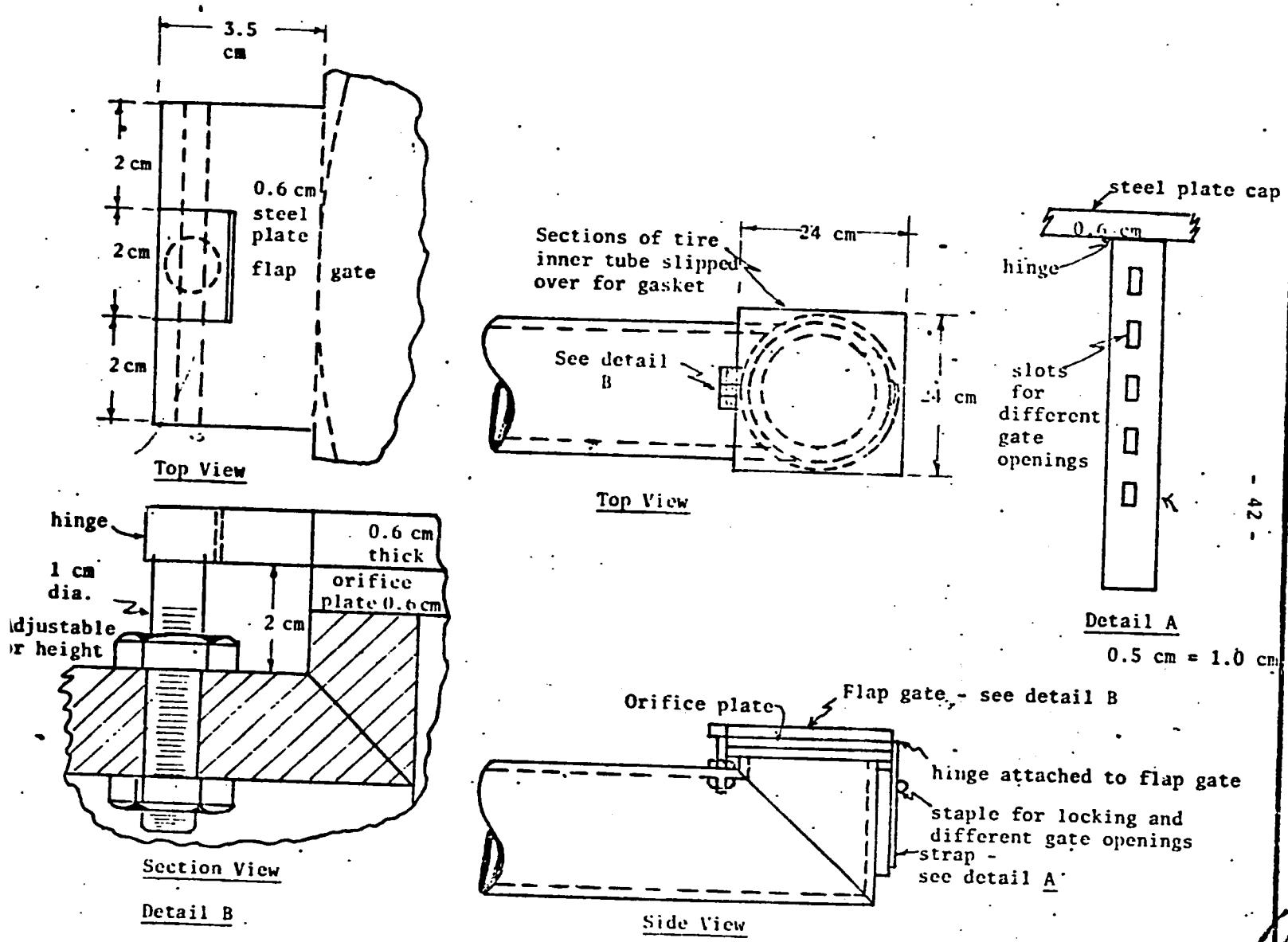

Figure 25: Flap Gate for Improved Egyptian Pipe Outlet.

PRELIMINARY

PRELIMINARY

There is a flap gate on the downstream end which normally will be either fully open or closed. However, a method has been given in Figure 25 for making fractional gate openings. During the laboratory calibrations, a determination can be made of the amount of flow based on the gate opening. The slot locations shown in Detail A, Figure 25 can be located to allow 25, 50, 75 or other percentages of the possible flow to pass. The hinge can also be used to lock the flap gate closed. For a gasket, it is suggested that sections cut from old inner tubes be slipped over the square flap gate plate.

An orifice plate placed over the flange and under the flap gate can be used to measure the flow. Shown in Figure 24 is a 16 cm diameter square edge orifice machined in a 24 cm by 24 cm steel plate, 0.6 cm thick. This orifice plate must be ridgidly attached to the flange and be removable since other sizes of orifices may be required. About 30 cm upstream from the inside edge of the elbow opening is a piezometer tap for determining the piezometer head at the point. This tap contains a fitting, flush with the inside pipe wall which can be used either with a plug or for attaching a clear, rigid plastic tube. This tube is used for determining the level of piezometric head at the point. The level is noted using a portable measuring stick marked off in flow units as shown in Figure 24. The measuring stick units would be determined from the laboratory calibration of the particular size of pipe and orifice. Thus, opposite the water level in the tube, can be directly read the flow in liters per second on the stick.

The computations of flow through the pipe outlet using the 16 cm orifice for a range of upstream heads are shown in table 2. Shown are estimates of head losses for the different hydraulic features for heads ranging from 10-70 cm. Shown in Figure 26 are the total head and piezometric head for two cases, H=60 cm and 20 cm. Also noted is the location of the piezometer and the piezometric heads at that location for the two cases. This plot indicates that the upstream head should be greater than 20 cm in order to make a measurement of the flow using the orifice.

Table 2: Discharges and Head Losses for Improved Egyptian Pipe Turnout - L=5 m, D-20.3 cm

H cm	H m	Q m^3/s	Q l/s	V m/s	$V^2/2g$ exit m	$C_L V^2/2g$ entr. m	$C_L V^2/2g$ elbow m	$C_L V^2/2g$ orifice m	$f\frac{L}{D} V^2/2g$ pipe m
10	.10	0.0227	22.7	.70	0.025	0.015	0.020	0.031	0.008
15	.15	.0278	27.8	.86	.038	.023	.030	.047	.013
20	.20	.0321	32.1	.99	.050	.030	.040	.062	.017
25	.25	.0359	35.9	1.11	.063	.038	.050	.077	.021
30	.30	.0393	39.3	1.22	.076	.046	.061	.093	.026
35	.35	.0425	42.5	1.32	.089	.053	.071	.109	.030
40	.40	.0454	45.4	1.41	.101	.061	.081	.124	.034
50	.50	.0502	50.2	1.55	.122	.073	.098	.150	.041
60	.60	.0556	55.6	1.72	.151	.091	.121	.186	.051
70	.70	.0600	60.0	1.86	.176	.106	.141	.216	.060

C_L entrance = 0.60 C_L exit = 1.0

C_L elbow = 0.80 f = 0.014

C_L orifice = 1.23

Reference - Rouse, Elementary Mechanics of fluids

PRELIMINARY

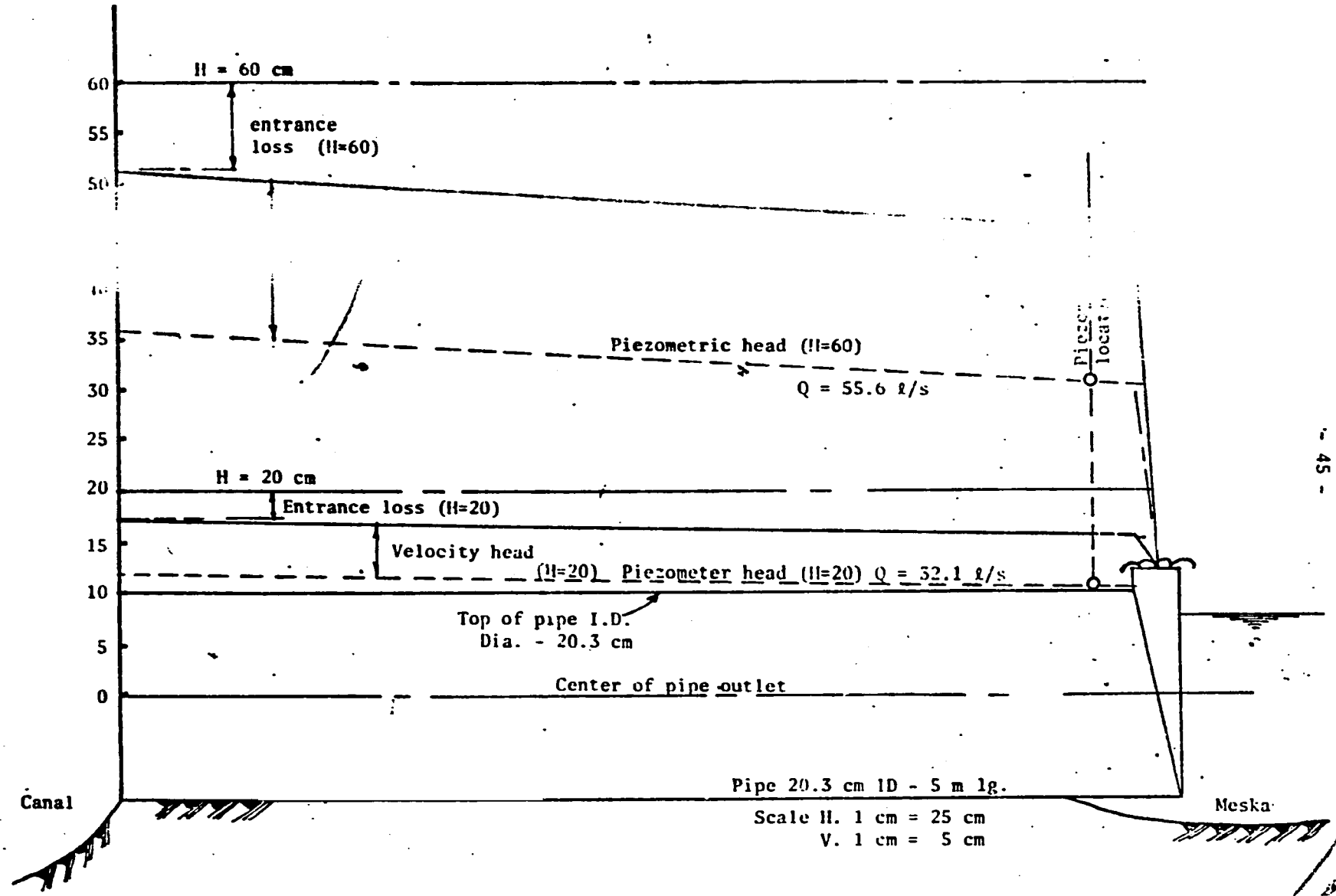

Figure 26: Variation of Head Along Pipe Outlet.

PRELIMINARY

It must be emphasized that only one diameter and length of the improved Egyptian pipe outlet has been shown. Larger and smaller sizes may be required. Each size would require a laboratory calibration if it is to be used to measure the flow. If the adjustable gate is used, this will also be a variable in the calibrations.

Cost estimates have been obtained for construction of the three proposed outlets. The cost estimates do not include the required masonry and/or concrete structures or earthwork and field installation. The estimates are as follows:

(1) Pipe Outlet with Orifice Box

Galvanized steel pipe 12 m	LE 180.00
Steel plate 0.6 cm th. 2x4 m	160.00
Welding rod	1.00
Manufacturing costs	20.00
Labor costs	20.00
Total cost	LE 381.00

(2) New Orifice Module Intake

Galvanized steel pipe 12 m	LE 180.00
Steel plate 0.6 cm th. 2x4 m	160.00
Casting of Venturis (3 sizes)	60.00
Manufacturing costs	80.00
Labor costs	80.00
Total cost	LE 560.00

(3) Improved Egyptian Pipe Outlet

Gavanized steel pipe 12 m	LE 180.00
Steel plate 0.6 cm th.	2.50
Bolts and pins	.50
Steel strips	.50
Welding rods	1.00
Manufacturing costs	20.00
Labor costs	20.00
	LE 224.50

The costs can be reduced materially by using concrete, asbestos-cement or plastic pipe.

PRELIMINARY

VII SUMMARY

There is a great need for improved irrigation water turnouts and outlets in Egypt and this study was made to fulfill this need. Most of the present turnouts are pipe outlets and Fayoum weirs used only in Fayoum Province. The development of these turnouts is reviewed together with modifications and additions made over a long period of years. Turnouts used in other countries are reviewed and their application to the Egyptian need are discussed. Based on this study, three turnout designs are selected and recommended for additional field and laboratory testing. Two of the designs are based on improvements to the existing pipe outlets and the other is an intake structure. From this evaluation, an improved turnout, which can also be used for water measurement, will evolve.

References

(1) El Kady, Mona, Clyma, Wayne and Abu-Zeid, Mahmoud, On-Farm Irrigation Practices in Mansouria District, Egypt. Amer. Soc. of Agr. Engrs., Paper No. 79-2566, December, 1979, 28 pgs.

(2) Kraatz, D. B. and Mahajan, J. K., Small Hydraulic Structures, Food and Agriculture Organization, U.N. Irrigation and Drainage Paper 26/1, Rome, 1975.

(3) El Madani, M., The Self Adjusting Weir, Third Congress of the International Commission on Irrigation and Drainage, Transactions, Volume IV, New Delhi, 1957, pgs. 9.19-9.28

(4) El Darwish, A. A. and Nadar, M. K., New Design for Fair Irrigation Water Distribution by Field Outlets, 14 pgs. typewritten.

(5) Attallah, George, Improvement of Small Hydraulic Structures for Better Use of Water in Irrigation, 24 pgs. handwritten.

(6) Nicola, Farid, Field Outlets in the U.A.R., Seventh Congress of the International Commission on Irrigation and Drainage, Transactions, Volume IV, Mexico City, 1969, pgs. 24.167-24.180.

(7) U.S. Department of Interior, Irrigation Adviser's Guide, USDI Bureau of Reclamation, U.S. Government Printing Office, Washington, D.C., 1951.

(8) Thomas, C.W., World Practice in Water Measurement and Control at the Farm Turnout, ASCE paper, U.S. Bureau of Reclamation, Denver, CO (Mimeo) 1959.

(9) U.S. Department of Interior, Water Measurement Manual, Bureau of Reclamation, Denver, Colorado, 1953.

(10) Trout, T.J. and Kemper, D.W., Watercourse Improvement Manual, Water Management Technical Report No. 58, Water Management Research Project, Colorado State University, Ft. Collins, Colorado, 1980.

(11) El Darwish, A.A. and Wahby, H. Morsy Aly, Flow through Circular Orifices with a Square Shoulder in a Thin Wall. United Arab Republic, Ministry of Irrigation, Hydraulic Research & Experiment Station, Delta Barrage, March, 1970.

(12) Baz, A. Report on Calibration of 3 Short Venturis. Mech. Power Dept., Cairo Univ., June, 1980, handwritten.

(13) Shokry, Sharl Report on a Pipe-Orifice Turnout, Department of Irrigation, El Mansoura University (in Arabic)

E

STAFF PAPER # 67

Introduction to the Cooperatives in Kafr El Sheikh

by

Abdel Fattah El Masry and Ahmed El Attar

PRELIMINARY

Introduction to the Cooperatives in Kafr El Sheikh

by

Abdel Fattah El Masry and Ahmed El Attar

In the process of examining how various farmer organizations may evolve and be sustained, the notions of authority and enforcement must be discussed. An institutional mechanism which plays an important role in the farmers lives is the cooperative. Whether or not the cooperative can be used to serve as an authoritative instrument to sustain the functioning of a farmer organization is one focus of the sociologists in their work concerning the topic of farmer organizations.

What is to be presented in this staff report is an introduction to seven cooperatives in the Kafr El Sheikh field site. This study which was completed is only a first in a series of studies on cooperatives which will be completed in order to make a determination on how the cooperative may be used in organizing farmers. The information obtained in this round was collected to give to the reader a basic understanding of some crucial features of the cooperative.

The study involved seven cooperatives in the Kafr El Sheikh area: Abo Raia, Abu Mostafa, Ariamown, El Reiad, El Reiad Agrarian Reform, El Thabet, and El Wizaria. Directors of the cooperative were interviewed using the questionnaire presented in Annex 6. Each interview lasted approximately 3-5 hours. The data collected from each cooperative has been summarized and checked for accuracies in translation in order to obtain the most objective description possible. This report will be organized by first describing the general setting of the cooperative and then by focusing on specific operational aspects of the cooperative such as equipment owned, other inputs owned, and activities pursued.

PRELIMINARY

The Setting

The cooperative structure in Egypt is briefly outlined in Figures 1 and 2. Figure 1 charts out the organizational format of the cooperatives making up the cooperative union. The cooperative union is under the Minister of Agriculture with the chief organizational unit being the Central Cooperative Union (Figure 1). This Union consists of three major types of cooperatives: the General Agricultural Cooperative Society, the Agrarian Reform General Cooperative Society, and the General Society of the Reclaimed Land Cooperatives. Each of these general societies have units at the governorate level, the district level, and the village level. Also, within the general cooperative society exist specialized cooperatives for specific products like cotton, onions, vegetables, and citrus fruit with the largest one serving the potato farmers.

Supporting the cooperatives demands that other agencies become involved with the different aspects of the cooperative's responsibilities (Figure 2). The primary administrative support comes from the general department of governorate affairs. This includes the selection of the village cooperative managers. The section of agricultural cooperation serves as the auditing authority for the village cooperatives among other administrative duties. Financial support is transferred through the village bank structure. Again, such support emanates at the governorate, district, and local level. Within this organizational framework, the local cooperatives are given the parameters within which they must work.

The seven cooperatives studied are summarized in Figure 2. In addition, there are detailed lists of the administrative personnel and the board members for each cooperative in Annex 1 and Annex 2 respectively. Also, Annex 3 provides a complete list of machinery to which the cooperative has access, Annex 4 provides a complete list of material input (such as seed, fertilizer, insecticide, etc.) now stored by the cooperative, and Annex 5 delineates what material input the cooperative plans to acquire in

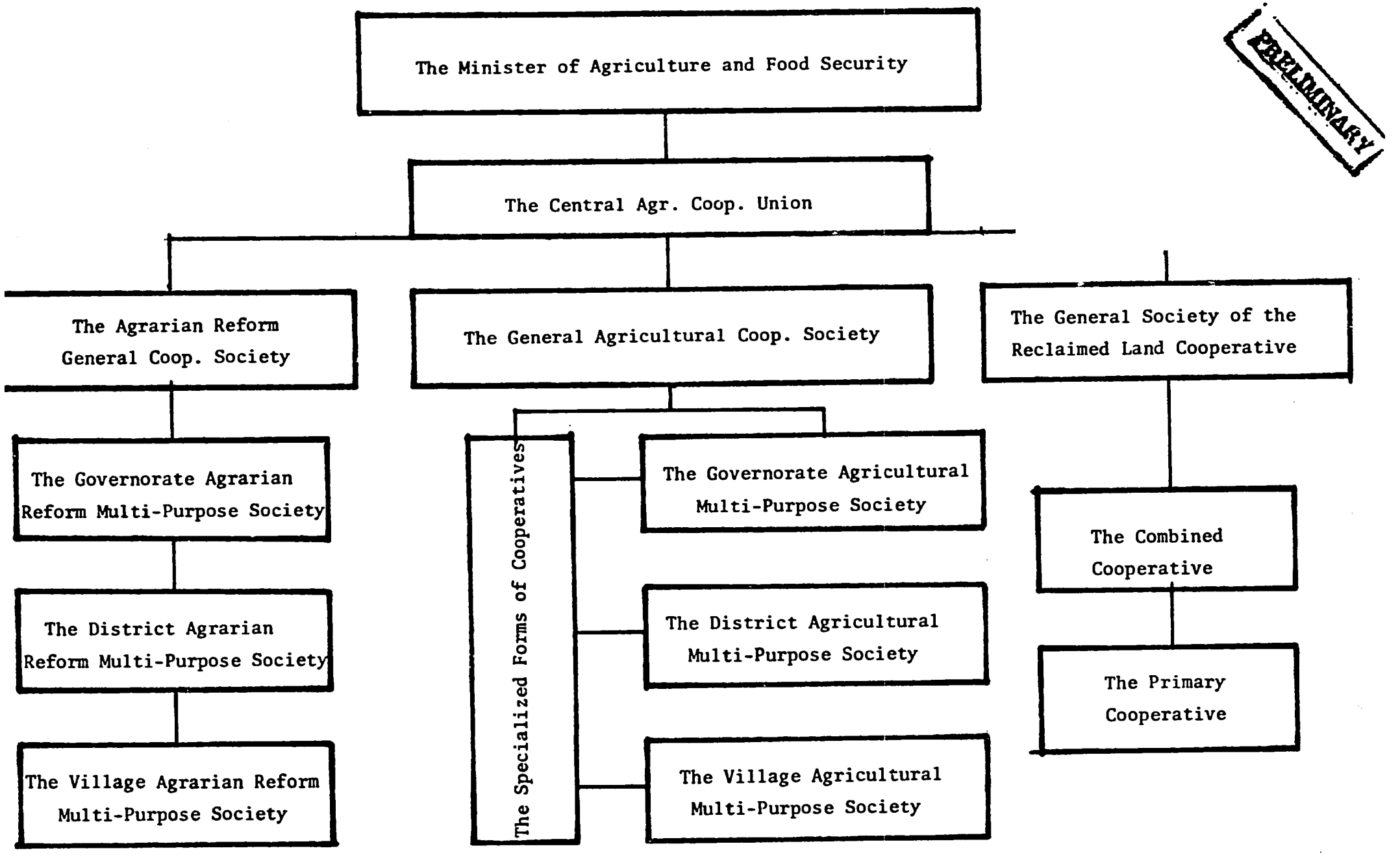

Figure 1: Organizational Chart for the Cooperative Union

PRELIMINARY

the near future. Such lists present to the reader a basic inventory to what the cooperative has and these can be used to analyze the capability of the cooperatives in supporting various farmer projects.

In terms of the basic purpose of the cooperative, as perceived by the managers, there are five major activities which almost all the cooperatives mentioned.

- Help supply the farmer with necessary material input and machinery;
- Develop an extension program for the farmers;
- Help the farmers in the marketing of their crops;
- Arrange for the cropping patterns of the area; and
- Help the farmers with pest control.

Other activities designated by one or two cooperatives include such things as implementing the cotton control program, and helping the farmers to maintain drains and canals. The agrarian reform cooperative is much more involved with the farmer's operation because they also help the farmer in plowing his land, transporting the harvest from the farm to the cooperative, irrigating, marketing, and financing. With exception of the agrarian reform cooperative, most of the cooperatives agree that the cooperative performs the five vital functions previously metioned.

The cooperatives work closely with the Ministry of Agriculture, but their connection with the local leaders varies according to the activities of the cooperative manager. Three of the cooperatives work only through their board members and then only regarding the pest control programs. distributing animal feed, and establishing cropping patterns. The other four cooperatives who do interact with local leaders do so with the Omda and the local councils. Again the type of activities involved with such interaction include establishing a cropping pattern and developing extension activities while the agrarian reform cooperative also concerns itself with maintenance of equipment, meskaş,etc.; pest control; and marketing procedures.

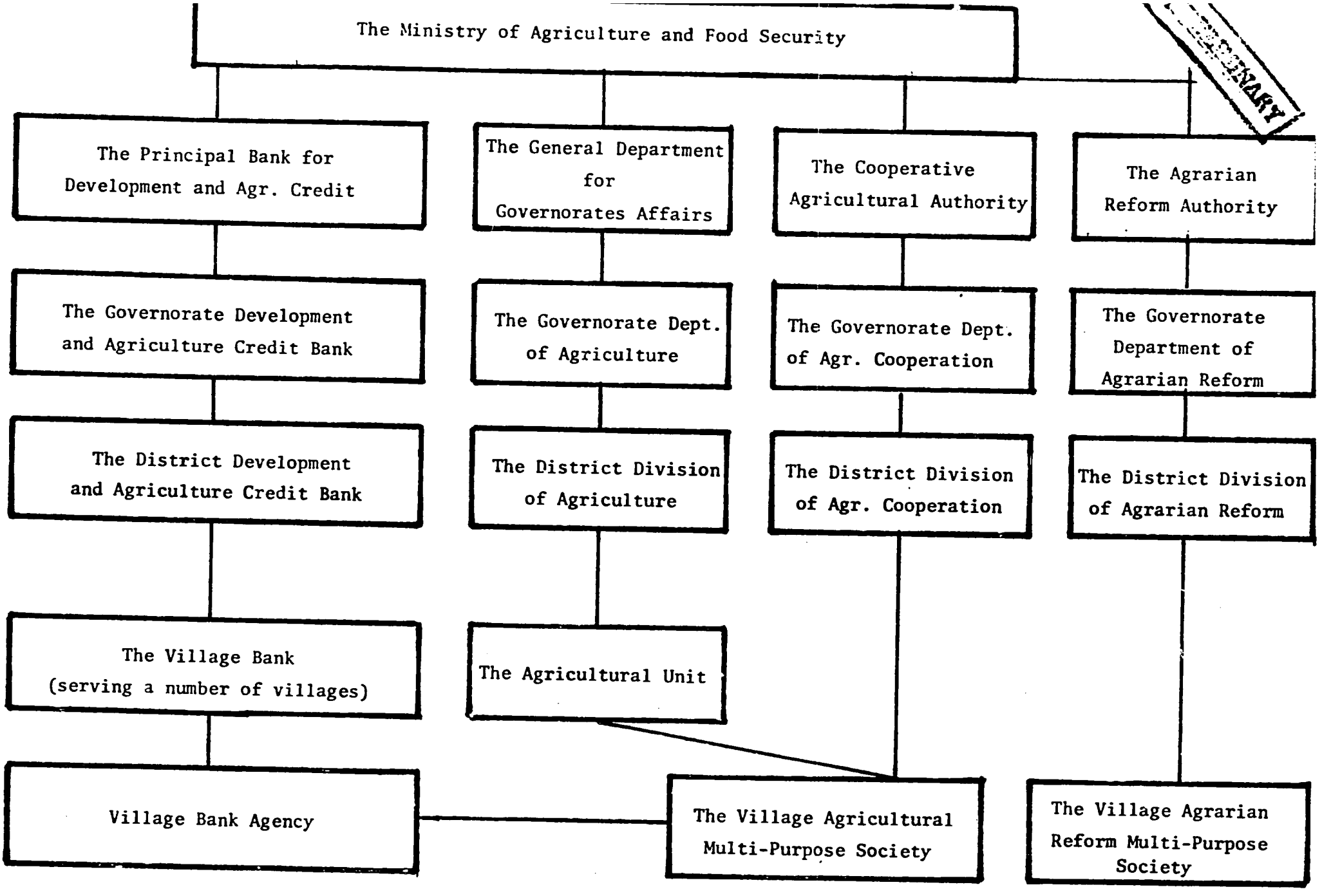

Figure 2: Organizational Chart for the Support System of the Cooperative

PRELIMINARY

As to the actual leadership of the cooperative itself, there are two means by which the leaders are selected. Regarding the administrative personnel, the professionals are government employees selected by the Ministry of Agriculture to serve in their respective positions. All other support staff such as drivers, technicians, etc. are chosen by the Board members. The board members are supposed to be selected by the member farmers of the cooperative. In reality, such Board members come to their positions via negotiations among the influentials of the village. There is also some question as to how familiar the Board members are with the operations of the cooperative.

PROCEDURES FOR OPERATION

The cooperative performs many functions and what is to follow is a description of various cooperative operations which serve as a means to achieve the specified functions. Four separate procedural operations will be discussed: operations concerning equipment, concerning the supplying of input to the farmers, concerning the dissemination of information, and concerning the crop rotation activities. Based on the discussion of these operations, it is hoped that an understanding of the general workings of the cooperative may be accomplished.

EQUIPMENT:

The general procedure for obtaining equipment is as follows. To begin with the Board members determine a need and initiate the process by writing a request for equipment. There is a need for approval of the request by the Agriculture District, the Cooperation Department, the Cooperation District, and the Cooperative Agricultural Authority. After the approval is given, the cooperative goes to the credit bank to receive the money which will be used to purchase the equipment and then the cooperative will buy the needed equipment. The land reform cooperative follows a similar procedure except they seek approval from the land reform

PRELIMINARY

Name of Cooperative	Year Organized	Area Served F, K	Number of Farmers	Sample Range of Land Ownership
Abo Raia	1959	2827,17	950	13 K to 27 F
Abu Mostafa	1958	2034,0	790	12 K to 10 F
Ariamown	1954	3119,17	1147	10 K to 22 F
El Reiad	1945 (App)	1426,12	750	12 K to 26 F
El Reiad (Agr. Reform)	1956	792,0	500	18 K to 5 F
Elthabet	1962	1017,0	480	7 K to 7 F
El Wizaria	1959	1850,0	807	14 K to 30 F

Figure 2: Summary of the Seven Studied Cooperatives in Kafr El Sheikh
(F is Feddans, K is K

PRELIMINARY

authority structure. To complete such a process takes between six months to one year with the sprayers having a much better turn-around time than tractors.

Once the cooperative has the machinery, the farmers are allowed to use that equipment. The farmers must write a request to the cooperative manager stating what is to be done with the equipment. Once the approval is granted by the manager the farmer pays for the use of equipment, in terms of area to be served and time needed, to the cooperative. The manager then schedules the equipment for the requesting farmer. Time needed to go through this procedure is approximately two days.

For the Agrarian Reform cooperative, the cooperative provides all the equipment necessary for the farmers' activities. The farmers and officials meet with each other to schedule the work needed to be done and it is from this schedule that the equipment is made available for the farmer. If the farmer needs some equipment for additional work, the Board members investigate the situation and decide if the equipment can be used or not. Payment for the equipment is done at the end of the season by extracting the amount charged to the farmer from the farmer's income from his yield.

All the cooperatives state that there is a maintenance program for their equipment and it follows a specific procedure. The Agriculture District's mechanic makes a yearly visit to each cooperative. At this visit he records what equipment is not operable and what should be done to rectify the matter. The cooperative then writes a request for repairs and collects the money to buy the parts needed. Approval must be given by the District of Cooperation and the Agriculture District and then with that approval, the cooperative may obtain the funds from the credit bank. Once all the preparations are made, the mechanics at the Agriculture District repair the equipment. All parts and repairs must be done at the

PRELIMINARY

government stores and garages. For motorized sprayers, the time frame for repair is from 15 days to about three months; and for tractors it can range from one month to more than one year.

The major problems surrounding the equipment operations are a shortage of spare parts available to the cooperatives, the excessive length of time it takes for repairs, and the rule that all parts must be purchased from government stores. One example is that one cooperative has had a tractor which was broken for five years because the government store did not have the right type of spare parts even though they may be obtained in the private sector. Another concern among a few cooperatives is that if the cooperative does not have the money to pay for the repairs, then no repairs will be made at all on any type of credit system.

SUPPLY OF INPUTS:

The cooperative provides practically all the inputs to the farmers in terms of fertilizer, chemicals, seed, and so on. What input the cooperative receives depends on the cropping pattern within the area of the cooperative. The cooperative sends the cropping pattern to the agriculture district, the agriculture department, and the credit bank. From this cropping pattern, the bank will send the input to the cooperative to be dispersed to the farmers.

For the farmer, in order to obtain his portion of the input, he must go to the cooperative to write his rotation pattern in the record book. This record book contains all the farmers' size of land, their crops to be planted, and the basic financial information necessary to determine whether or not the farmer can pay his bills. After the farmer records his season's plans, he then goes to the credit bank who in turn writes permission for the farmer to obtain the input which is back at the cooperative. Once the cooperative receives the bank's permission, then the farmer recieves the input which is recorded in the record book. For the Agrarian Reform cooperative, the cooperative takes what the farmer says

PRELIMINARY

he wants, checks on whether the farmer is still holding any debts, and if not, the cooperative will give the input to the farmer. If debts are present, the farmer cannot receive any input. The cotton program is not accountable to these rules, for the farmer receives the seed and other input despite his financial status. This process of receiving input takes approximately four days.

If the farmer wants any input in excess of what is allotted to him, he must initiate the request by writing to the cooperative manager. The manager then examines the farmer's situation and writes a recommendation on whether or not to supply the farmer with the added input. If the farmer's request is accepted by the manager then the farmer must obtain approval from the Agriculture District. Once that approval is obtained he goes to the credit bank to obtain the input. However, even if all of the above approvals are made, the farmer has little chance to obtain the input because the bank will refuse to give him the input. Refusals at this point are due to the following reasons: there is no extra input available, the bank simply does not agree with the other agencies and will not grant the farmer his request, the bank sets a time frame for the farmer to request extra input and the request may be after the deadline, and the small farmer who does not request the input in terms of complete bags will not receive anything. The time frame for this procedure is approximately ten days. Again, the Agrarian Reform cooperative keeps the request and approval within the cooperative itself and its turn around time is about three days.

DISSEMINATION OF INFORMATION:

Information concerning inputs is generally disseminated by a number of ways. Most of the cooperatives use individual contact with farmers either in the farmers' fields or at the cooperative itself as the means to disseminate information. Other methods used include group meetings with the farmers in the village or at the cooperative, use of board members as contact points, use of village organizations as means to receive ideas,

PRELIMINARY

and the use of planned extension programs.

In addition to the methods of disseminating information, the cooperatives were asked how problems in the area were discussed. All of the cooperatives stated that the farmers do come to the cooperative to talk about problems and the two major topics of concern are with the cropping patterns and with the pest problems. Other topics of discussion include bad crops, the farmers' financial accounts, shortages of input, how to use the input, what type of input should be used, maintenance problems, drainage and irrigation, and problems with the credit bank. According to the cooperatives, the farmers who generally come by to ask for help are the smaller farmers who are also illiterate.

The cooperatives also discuss problems with local organizational units. Mostly, they talk to the agricultural inspector, the Cooperation Department, and the Credit Bank. Topics which are discussed are generally the same as the problems discussed with the farmers with the addition of marketing practices, infrastructural support, and specific problems attributed to the cotton program.

CROPPING PATTERN PROCEDURE:

The following is a description of the procedure the cooperative follows in establishing the cropping pattern for its particular area. To begin with, the Agriculture District sends to the cooperative the area crop pattern for each cooperative. Then the manager and the Board members go to the different areas within the cooperative and determine where the particular crops will be grown. A crop pattern map is constructed which lists each farmer and what that farmer is to grow. A copy of the map is sent to the agriculture district and to the farmers. The farmers examine the map and are given fifteen days to respond to their situation.

If the farmer disagrees with his assigned allocation, he writes a complaint with the reasons for his objections. The agriculture district

PRELIMINARY

collects all the complaints and sends a committee to investigate the situation and make a determination as to whether or not to accept the farmer's objection. The committee assigned to investigate the complaint is made up of the cooperative manager, a district of agriculture official, a board member, a surveyor, and a Sheikh Ballad. Based on the decisions of each complaint, the final cropping pattern is completed. This allocation must be followed by the farmers and it is from this allocation that the credit bank orders the needed input. This procedure takes about one month to complete. For the Agrarian Reform cooperative, the cropping patterns are already established and so the farmers already know what is their allocation.

To conclude, the purpose of this report has been to describe the cooperatives in Kafr El Sheikh in order that further evaluation as to their role in developing farmer organizations may be pursued. In the examination of the general setting surrounding the cooperative and the specific major operations of the cooperative, one can begin to look at points where the influence of the cooperative may be useful or not useful in the development of farmer organizations. Also, one can now pursue specific studies to see how strategies concerning the organization of farmers may be integrated into the existing institutional infrastructure. Thus, this report is an initial study from which further work on the structural influences of farmer organizations may evolve.

ANNEX 1

PRELIMINARY

Administrative Personnel for the Cooperative

o Raia Cooperative

o.	Name	Position	Yrs. Working With Coop.	Previous Work Exp. with Coop	Residence	Formal Education
1	Talat Awad Hiekal	Coop. Manager	8 years	8 years	El Wizaria	B.Sc Agriculture
2	Zidan Ebrahiem	Agr. Extension	7 years	2 years	El Thabet	B.Sc Agriculture
3	Ezat El Gohary	Agr. Technician	3+10 before coop	2 years	El Wizaria	Agr. Secondary School
4	Farahat Abdel Fatah	Agr. Technician	11 years	8 years	Dakalt	Agr. Secondary School
5	Zakaria Abdel Rahman	Agr. Technician	6 years	6 years	El Wizaria	Agr. Secondary School
6	Ahmed Abdel Khalek	Agr. Technician	4 years	1 year	El Wizaria	Agr. Secondary School
7	Saleh El Tanahie	Clerk	16 years	12 years	Abo Raia	Preparatory School
8	Aly Mohamed Aly	Driver	25 years	6 years	Dakalt	Primary
9	Samir Sallam	Driver	New	New	Om Sen	Primary
0	Taha Mostafa	Tech. (Tractor)	New	1 year	El Zawy	None
1	Kadr Sallama	Tech. (Tractor)	16 years	17 years	El Manshia	Primary School
2	Foad Hassan	Laborer	16 years	17 years	Abo Raia	Primary School
3	Ebrahem El Tanahy	Guard	16 years	17 years	Abo Raia	None
4	Aly M. Okabye	Tech. (Mechanic)	Newly	1 year	Abo Raia	Mechanical School
5	Mohamed M. Yousef	Surveyer	20 years	3 years	Farag Village	

PRELIMINARY

Abu Mostafa Cooperative

No.	Name	Position	Yrs. Working With Coop.	Previous Work Exp. with Coop	Residence	Formal Education
1	Mohamed Negm	Manager	2 years	15 years	Abu Mostafa	Middle Agr. School
2	Abdel Towab Mohamed	Assistant	7 years	4 years	Mathalas	Middle Agr. School
3	Yousif El Masry	Extension	3 years	--	El Said Khalil	B.Sc Agriculture
4	El Saied Sheta	Extension	1 year	--	El Mothalal	B.Sc
5	Saad A. Elgabaly	Mechanic	new	--	El Thabet	Middle Tech. School
6	Sobhy Esmail	Driver Catepiller	17 years	--	Abu Mostafa	None
7	Salem Mabrak	Driver Tractor	17 years	--	Abu Mostafa	None
8	Rizk Morsy	Mechanic	3 years	17 years	Abu Mostafa	None
9	Saber Khalil	Mechanic	1 year	17 years	Abu Mostafa	None
10	Said Ahmed S.A.	Mechanic	17 years	--	Abu Mostafa	None
11	Aly Ramadan	Guard	17 years	--	Abu Mostafa	None
12	Abdallah A. El Fattah	Cashier	1 month	--	El Thabet	Commercial School
13	Mansour M.M.	Laborer	17 years	--	Abu Mostafa	None

PRELIMINARY

riamown Cooperative

No.	Name	Position	Yrs. Working with Coop.	Previous Work Exp. with Coop	Residence	Formal Education
1	El Saied Rayan	Manager	4 years	16 years	Akala	Secondary Agr. School
2	Ibrahim Amash	Assistant	10 years	1 year	Village Ibrah.	Secondary Agr. School
3	Mostafa Hagag	Assistant	5 years	--	Kafr E. Sheikh	Secondary Agr. School
4	Gamal El Bishbishy	Assistant	3 years	2 years	Kafr E. Sheikh	Secondary Agr. School
5	Gamal Habassa	Assistant	2 years	--	Elemdan	Secondary Agr. School
6	Fawzy Abdel Rasoul	Extension	2 years	--	Sakha	B.Sc.
7	Saied Ahmed Saied Ahmed	Assistant Extension	1 year	--	Meet Elwan	B.Sc.
8	Mohamed El Sherbiny	Cashier	10 years	--	Ariamown	Prepratory School
9	Esmaiel Saad	Mechanic	14 years	6 years	Ariamown	None
10	Ahmed El Rawak	Mechanic	13 years	--	Ariamown	None
11	Hassan El Rawak	Mechanic	21 years	--	Ariamown	None
12	Ibrahim Habib	Driver	14 years	--	Ariamown	None
13	Aziz El Gendy	Driver	15 years	--	Mehalet Karab	None
14	Fathy Abdel Al	Laborer	15 years	--	Sakha	None
15	Kamel Omer	Cashier				
16	Abdel Kader Ismaiel	Tax Collector				

El Reiad Cooperative

PRELIMINARY

No.	Name	Position	Yrs. Working With Coop	Previous Work Exp. with Coop	Residence	Formal Education
1	Ahmed Ali Sherif	Manager	10 years	8 years (other)	El Riead	Secondary Ag. School
2	Ahmed Soltan	Extensionist	3 years	1 year (other)	Farag	B.Sc. Agriculture
3	Refaie Mohamed El Khiat	Assistant	4 years	6 years	El Riead	Secondary Ag. School
4	Abdel Menem El Saied	Asst. Eng. Mechanic	5 years	4 years	El Riead	Secondary School
5	Mohamed Yousef	Laborer	16 years	--	El Riead	None
6	Ibrahim El Shombary	Driver	2 years	(came from Tahir coop (New land))	El Riead	None
7	Mohamed Mekawy	Mechanic	16 years	--	Elmathalath	None
8	Ahmed Megahed	Driver	14 years	--	Hag Ali	None
9	Abdel Sattar Rezk	Laborer	1 year	(came from Tahir coop (New Land))	Om Sen	None

1 Rèiad Agrarian Reform Cooperative

PRELIMINARY

No.	Name	Position	Yrs. Working with Coop.	Previous Work Exp. with Coop	Residence	Formal Education
1	El Saied M. Eletr	Manager	5 years	5 years	El Riead	Secondary Ag. School
2	Ahmed M. Gazy	Assistant	7 years	--	Elmathalath	Secondary Ag. School
3	Adly Ismaiel	Store Keeper	3 years	1 year	El Riead	Secondary Com. School
4	Abd Rabu Yousef	Clerk	2 years	--	El Ragama	Secondary Com. School
5	Yousef Fahim	Administrator	1 year	1 year	Farag	Secondary Com. School
6	Tawfik El Sharkawy	Accountant	17 years	--	Abu Eisha	
7	Khàdr Mostafa	Laborer	16 years	--	El Thabet	
8	Ali Hassan	Tractor Driver	17 years	3 years	El Uhietan	
9	Ibrahim Farag	Mechanic motor sp.	17 years	--	Elalfa	
10	Mohamed Abdel Razek	Driver	10 years	--	Elalfa	
11	El Saied Khamis	Agr. Guard	17 years	--	Omer Yousef	
12	abdel Al Fotouh	Agr. Guard	17 years	--	Abaza	
13	Saleh Magazi	Telephone Operator	16 years	--	Belal	
14	Ibrahim Abdallah	Agr. Guard	17 years	--	El Mafty	
15	Abdel Sattar El Masry	Agr. Guard	17 years	--	El Mafty	
16	Mokhtar El Masry	Agr. Guard	10 years	5 years	El Mafty	
17	Ali Ibrahim	Agr. Guard	10 years	5 years	El Mafty	
18	Allam Abdel Gelil	Agr. Guard	12 years	5 years	Barrada	
19	Kodb Ahmed	Agr. Guard	12 years	5 years	Barrada	
20	Mohamed Ibrahim	Driver	16 years	--	El Mafty	
21	Mowra Mohamed	Driver	16 years	--	El Mafty	

El Thabet Cooperative

PRELIMINARY

No.	Name	Position	Yrs. Working with Coop	Previous Work Exp. with Coop	Residence	Formal Education
1	Mohamed Beltagy	Manager	4 years	5 years (other)	El Thabet	B.Sc. Agriculture
2	Ahmed Foad	Assistant Director	4 years	6 years Rakama Coop		Middle Agr. School
3	Abdel Aziz Amer	Mechanic	2 years	Helwan Factory		Prepratory School
4	Ahmed El Hadad	Laborer	6 years	12 years (Samdila Coop)		None
5	Ibrahim Gomaa	Driver	5 years	Nothing	El Taiara	
6	Metwaly Mohamed	Laborer	8 years		El Thabet	
7	Wahaba Abdel Al	Laborer	8 years			
8	Mohamed Yousef	Guard	8 years			
9	Abdel Makroud El Badry	Guard	8 years			

PRELIMINARY

El Wizaria Cooperative

No.	Name	Position	Yrs. Working with Coop	Residence	Formal Education
1	Ezat Rachad Aly	Coop Manager	5 years	El Ethad	Agr. B.Sc.
2	Fiekry Abdel Gafar	Extension	New	Abo Tamada	Agr. B.Sc.
3	Rachad El Sayed Hiesen	Agr. Technician	14 years	El Wizaria	Agr. School
4	Mohamed Abdel Fattah	Agr. Technician	7 years	El Ethad	Agr. School
5	Ebrahiem Sayed Ahmed	Agr. Technician	2 years	Edriga	Agr. School
6	Sobhy Mohamed Hassan	Mechanical Tech.	2 years	Edriga	Technical School
7	Abdel Raziek Kalab	Surveyer	16 years	Abo Galab	Primary School
8	Aly Abo El Aiez Mohamed	Driver	16 years	Kafr El Sheikh	Primary
9	Taha Mohamed Soliman	Laborer	7 years	El Wizaria	None
10	Mohamed Abdel Atiey	Guard	12 years	Abo Galab	None
11	Foad Abdel Kader	Mechanic	10 years	El Wizaria	
12	Hassan Aly Amer	Guard	16 years	El Wizaria	None

ANNEX 2

Board Members for the Cooperatives

o Raia Cooperative

PRELIMINARY

o.	Name	Position	Occupation	Amt. of Land Owned (F,K)	Amt. of Land Farmed (Rent & Own) (F,K)	Residence	Formal Education	Yrs. Exp. With Coop
1	Aly A. Khalifa	Coop Director	Farmer	1.1	1.1 + 1.23	Abo Raia	Prep. Azhar	10 years
2	Abel Halim Zaied	Coop Secretary	Farmer	3.0	3.0	El Manshia	Kotab	10 years
3	Basionie Saalem	Member	Farmer	3.0	3.0	El Manshia	Kotab	10 years
4	Ebrahiem El Sherbini	Member	Farmer	17.0	17.0	El Manshia	Kotab	10 years
5	Fatah Abdel Nasr	Member	Farmer	1.6	1.6	Abo Raia	Kotab	10 years
6	Fathy Gadallah	Member	Farmer	3.0	3.0	Gadallah Vil.	Kotab	10 years

1 Mostafa Cooperative

).	Name	Position	Occupation	Amt. of Land Owned (F,K)	Amt. of Land Farmed (Rent & Own) (F,K)	Residence	Formal Education	Yrs. Exp. With Coop
	Mohamed Dishish	Director	Farmer	3.0	3.0	Makalty	None	12 years
	Salah El Wakil	Cashier	Farmer	4.0	4.0	El Wakil	None	12 years
	Mohamed El Gohary	Secretary	Farmer	3.0	3.0	Abo Mostafa	None	12 years
	Abdel Gawad Abo El Git	Member	Farmer	2.0	2.0	Abo Mostafa	None	12 years
	Abdel Salam El Attar	Member	Farmer	6.0	6.0	Abo Mostafa	None	12 years

ariamown Cooperative

No.	Name	Position	Occupation	Amt. of Land Owned (F,K)	Amt. of Land Farmed (Rent & Own) (F,K)	Residence	Formal Education	Yrs. Exp. with Coop
1	Ahmed Yousef	Director	Farmer	2,16	2,16	Ariamown	Read & Write	13 years
2	Awad Mohamed	Secretary	Farmer	2	3	Ariamown	Read & Write	7 years
3	Okasha Yasin	Cashier	Farmer	1,12	1,12	Ariamown	Read & Write	7 years
4	Hafiz Eisawy	Member	Farmer	3	3	Ariamown	Read & Write	7 years
5	Abdel Aziz El Sendcouny	Member	Farmer	2	3	Ariamown	Read & Write	8 years
6	Yousef Rezk	Member	Farmer	1	4	Ariamown	Read & Write	3 years
7	Hagag Awad	Member	Farmer	2	2	Ariamown	Read & Write	7 years

l Reiad Cooperative

No.	Name	Position	Occupation	Amt. of Land Owned (F,K)	Amt. of Land Farmed (Rent & Own) (F,K)	Residence	Formal Education	Yrs. Exp. with Coop
1	Shehata El Sharaky	Director	Farmer	2,7	2,7	El Reiad	None	16 years
2	Ibrahim Honish	Secretary	Farmer	1,12	1,12	Farag	None	12 years
3	Yousef El Zehiry	Cashier	Farmer	2,12	2,12	Hag Ali	None	12 years
4	Ali Dishish	Member	Farmer	1,19	1,19	Nehietan	None	4 years
5	Basiouny Soltan	Member	Farmer	2,12	2,12	Farag	None	12 years
6	Baiomy Shaaban	Member	Farmer	3	3	El Sheir	None	6 years
7	Abdel Latif Honish	Member	Farmer	3	3	Hag Ali	None	6 years

PRELIMINARY

Reiad Agrarian Reform Cooperative

Name	Position	Occupation	Amt. of Land Owned (F,K)	Amt. of Land Farmed (Rent & Own) (F,K)	Residence	Formal Education	Yrs. Exp. with Coop
Mohamed Yousef	Secretary	Farmer	0,23		Hendawy	None	14 years
Ibrahim Athman	Member	Farmer	1,3		Akleia	None	7 years
Ali El Saied Ibrahim	Cashier	Farmer	1		Akleia	None	7 years
Abdel Latif Gaber	Member	Farmer	2,15		Omer	None	14 years
Abdel Aziz Mabrouk	Store Keeper	Farmer	2		Elalaily	None	14 years

Thabet Cooperative

Name	Position	Occupation	Amt. of Land Owned (F,K)	Amt. of Land Farmed (Rent & Own) (F,K)	Residence	Formal Education	Yrs. Exp. with Coop
Basiouny Shrif	Director	Farmer	3	3	Hewin	None	6 years
El Saied Abu Arab	Secretary	Farmer	4,12	4,12	Taiara	None	9 years
Ali El Samahi	Cashier	Farmer	3	3	El Thabet	None	4 years
Mohamed Sadek	Member	Farmer	1	1	El Thabet	None	3 years

PRELIMINARY

Wizaria Cooperative

.	Name	Position	Occupation	Amt. of Land Owned (F,K)	Amt. of Land Farmed (Rent & Own) (F,K)		Residence	Formal Education	Yrs. Exp. with Coop
.	Saied Atia Zied	Director	Farmer	1,13	0.23	1,13	El Wizaria	Primary School	6 years
!	Ebrahim Kotb El Sayed	Secretary	Farmer	2,22	--	2,22	El Wizaria	Primary School	9 years
;	Basiouny A. El Belkas	Cashier	Farmer	2,22	--	2,22	El Wizaria	Primary School	9 years
!	Mohamed M. Abd Rabo	Member	Farmer	25,12	3,4	25,12	El Wizaria	Primary School	6 years
;	Abdel Sadek El Karsawy	Member	Farmer	1,16	1	1,16	El Wizaria	None	6 years

PRELIMINARY

ANNEX 3

Access to Machinery by the Cooperative

Abo Raia Cooperative

Quantity	Name	Owned/Rented	Rented From Whom	Condition
1	Tractor DT(55)	Coop owner	---	bad
1	Tractor Zietor 50	Coop	---	good
1	Tractor Nasr 50	---	Refaat Atia	good
1	Tractor Zietor 50	---	Abdel Sattar Zahra	good
1	Tractor Zietor 50	---	Abdel Fattah Ismail	good
1	Tractor Zietor 50	---	El Saied Mossa	good
1	Tractor Davied 45	---	Bedier Shalaby	good
1	Tractor Davied 45	---	Ibrahim Saleh	good
1	Tractor Ford	---	Seliman El Sayed S.	good
1	Tractor Ford	---	Abdel Moneiem	good
1	Tractor Ford	---	Azaiem El Schaban	good
1	Tractor IMT 50	---	Yehia M. El Sayed	good (sold)
1	Tractor Nasr 50	---	Schein Ismail	good
1	Tractor IMT 50	---	Abdel Mogeith	good
1	Tractor IMT	---	Aly Awad Salem	good
1	Tractor IMT	---	Mohamed Helal	good
1	Tractor Ebro 65	---	Mohamed Eissa	good
1	Tractor IMT 50	---	Mohamed M. Moawad	good
1	Tractor IMT	---	Bahnacy Gaanem	good
1	Tractor IMT	---	Mostafa Abdel Salam	good
10	Spray Motor	---	Mohamed Schien	good
1	Irr. Pump	---	---	good
1	Irr. Pump	---	Ibrahim El Mas	good
		---	Abdel Moneiem	good

PRELIMINARY

Abo Raia Cooperative (Cont.)

Quantity	Name	Owned/Rented	Rented From Whom	Condition
1	Irr. Pump	Coop	Ibrahim A. Faied	good
1	Irr. Pump	---	Aly M. El Nagar	good
1	Irr. Pump	---	Mohamed Aly Baraka	good
1	Irr. Pump	---	Abdel Kaled Shams	good
1	Irr. Pump	---	Mohamed Abdel Hamid	good
1	Irr. Pump	---	Abdel Gafar	good
1	Irr. Pump	---	Samir Abdel Salam	good

Abo Mostafa Cooperative

Quantity	Name	Owned/Rented	Rented From Whom	Condition
1	Catepiller (USSR)	Owned	---	good (fixed)
1	Zitar Tractor (Greek)	"	---	good (fixed)
8	Motorized Sprayers	"	---	good (fixed)
1	Local Threshing Machine	"	---	bad (not fixed)
1	Foreign Threshing Machine	"	---	bad (not fixed)
1	D.T. Plow	"	---	bad (not fixed)
1	Zitor Plow	"	---	bad (not fixed)
1	Maktara (loader)	"	---	bad (not fixed)

PRELIMINARY

Ariamown Cooperative

Quantity	Name	Owned/Rented	Rented From Whom	Condition
1	Zitar Tractor	Owned	---	broken
1	Farson	"	---	broken
1	D.T. Tractor	"	---	good
11	Motorized Sprayers	"	---	good
1	Maktara	"	---	good
1	Local Threshing Machine	"	---	broken
1	Plow	"	---	broken

El Reiad Agrarian Reform Cooperative: Access to Machinery

Quantity	Name	Owned/Rented	Rented From Whom	Condition
1	Zitar Tractor	Owned	None	good
2	Motor Sprayer	"	"	good
1	Motor Sprayer	"	"	new
1	Maktara	"	"	good
1	Plow	"	"	good
1	Local Threshing Machine	"	"	good

El Reiad Cooperative

Quantity	Name	Owned/Rented	Rented From Whom
1	D.T. Tractor	Owned	None
1	Zetor Tractor	"	"
1	Local Threshing Machine	"	"
2	Plow (1 DT; 1 Zetor)	"	"
1	Water Pump	"	"

PRELIMINARY

El-Thabet Cooperative

Quantity	Name	Owned/Rented	Rented From Whom	Condition
1	Zitar Tractor	Owned	---	good
3	Motorized Sprayers	"	---	good
1	Plow	"	---	good
1	Local Threshing Machine	"	---	good
1	Kasabia	"	---	broken
1	Maktora	"	---	broken

El Wizaria Cooperative

Quantity	Name	Owned/Rented	Rented From Whom
1	Zeitor Tractor 50	Owned	---
1	D.T. Tractor	"	---
7	Motorized Sprayers	"	---

PRELIMINARY

ANNEX 4

Material Input in Storage

Abo Raia Cooperative

Material	Amount (Sacks)	Received from Whom	Researcher's Observation of the Condition of the Input
Wheat Seeds	150 (ardeb)	from Credit Bank (storage)	Good 90%
Insecticide	---	---	---
Urea	1000.0		
Nitrate 31%	1000.0		
Sober (coomen)	994		Satisfactory 65%
Treble	1349 kg		
Nitrate 33%	130		

PRELIMINARY

Abo Mostafa Cooperative

Material	Amount (sacks)	Received from Whom	Researcher's Observation of the Condition of the Input
Fertilizer with sack			
Urea 46% 50 kg	430	Credit Bank	100% Good
Amonium Sulphate 21% 50 kg	173	Credit Bank	70% Satisfactory
Potasium Sulphate	36	Credit Bank	40% Poor
Amonium Sulphate 31% 100 kg	4	Credit Bank	50% Poor
Super Phosphate Local 50 kg	318	Credit Bank	20% Very Poor
Amonium Nitrate 311.50 kg	2786	Credit Bank	60% Satisfactor
Seeds			
Wheat Sakha 8	13500 kg	Credit Bank	Good Condition
Chemicals			
Andrin Badrin	2500 kg	Credit Bank	Good Condition
Landin	136 kg	Credit Bank	Good Condition
Malathion	762500 kg	Credit Bank	Good Condition
Soyalin	856000 kg	Credit Bank	Good Condition
D.D.T.	1000 kg	Credit Bank	Good Condition
Fellaton	522500 kg	Credit Bank	Good Condition
Rylclak	149300 kg	Credit Bank	Good Condition
Bazigran	10000 kg	Credit Bank	Good Condition
Zolon	191000 kg	Credit Bank	Good Condition
Sulpher	820000 kg	Credit Bank	Good Condition
Dion Diza	18000 kg	Credit Bank	Good Condition
Setralin	120000 kg	Credit Bank	Good Condition
Bakal	52000 kg	Credit Bank	Good Condition
Doresiban	18925 kg	Credit Bank	Good Condition
Lanite	512000 kg	Credit Bank	Good Condition
Zinkc Phosphate	588000 kg	Credit Bank	Good Condition
Tedion Mcrany	12000 kg	Credit Bank	Good Condition
Estam F	20000 kg	Credit Bank	Good Condition

Ariamown Cooperative

Material	Amount	Received from Whom	Researcher's Observation of the Condition of the Input
Super Phosphate	835,000 kg	Village Bank	Good (100%)
Zinc Sulphate	50 kg	Village Bank	Good (100%)
Potassium Sulphate	500 kg	Village Bank	Good (100%)
Amonium Sulphate	9,750 kg	Village Bank	Good (100%)
Nitrate (33%)	16,150 kg	Village Bank	Good (100%)
Urea (46%)	150 kg	Village Bank	Good (100%)
Wheat Seed Sakha 8	7,950 kg	Village Bank	Good (100%)

PRELIMINARY

El Reiad Agrarian Reform Cooperative

Material	Amount	Received from Whom	Researcher's Observation of the Condition of the Input
Super Trebel	3500 kg	Credit Bank	Good (100%)
Urea (46%)	2000 kg	Credit Bank	Good (100%)
Nitrate (33%)	1250 kg	Credit Bank	Good (100%)
Syolin	20 litre	Agrarian Reform Store	Good (100%)
Zinc Phosphate	5 kg	" " "	Good (100%)

El Reiad Cooperative

Material	Amount	Received from Whom	Researcher's Observation of the Condition of the Input
Urea (46%)	5650 kg	Village Bank	Good (100%)
Nitrate (33%)	10000 kg	Village Bank	Good (100%)
Nitrate (31%)	35500 kg	Village Bank	Good (100%)
Ammonium Sulphate (21%)	24500 kg	Village Bank	Good (100%)
Wheat Seeds (Sakha 8)	38400 kg	Village Bank	Good (100%)

El Thabet Coop

Material	Amount	Received from Whom	Researcher's Observation of the Condition of the Input
Urea (46%)	20100 kg	Village Bank	(100%)Good
Nitrate (31%)	72500 kg	Village Bank	(70%)Satisfactory
Nitrate (33%)	24250 kg	Village Bank	(70%)Satisfactory
Super Phosphate	33800 kg	Village Bank	(60%)Satisfactory
Super Treble	11300 kg	Village Bank	(70%)Satisfactory
Wheat Seeds (Sakha 8)	10500 kg	Village Bank	(100%) Good

PRELIMINARY

El Wizaria Cooperative

Material	Amount (Litre)	Received from Whom	Researcher's Observation of the Condition of the Input
Setrwien	3 900	Agr. District	Good
Landien	134	Agr. District	Good
Zaniet	36	Agr. District	Good
Zaniet	136	Agr. District	Good
Cifien 25% Good	30	Agr. District	Good
Cifien (None)	41	Agr. District	Bad
Phosphate Zinc	12	Agr. District	Good
Flaxon	23	Agr. District	Good
Terient	48	Agr. District	Good
Kalfan	1	Agr. District	Good
Kaltien	10	Agr. District	Good
Kaltien	25	Agr. District	Good
Malathion	191	Agr. District	Good
Deimonit 40%	31	Agr. District	Good
Laniet 57%	57	Agr. District	Good
Diwan	23	Agr. District	Good
Setrwien			

ANNEX 5

PRELIMINARY

Material Planned to be Stored

Abo Raia Cooperative

Material	Amount	Time of Arrival	Received from Whom
Urea Nitrate 31% Sober (coomen) Treble Nitrate 33%	1000.0 sacks 1000.0 sacks 994 sack 1349 kg 130 sack	The time changeable to receiving the inputs	The Village Bank arranges the time for receiving the inputs to the coop.

Abo Mostafa Cooperative

Material	Amount	Time of Arrival	Received from Whom
Nitrate Wheat Seed Super Phosphate Potassium Sulphate	According to the rotation	During November	Credit Bank

PRELIMINARY

Ariamown Cooperative

Material	Amount	Time of Arrival	Received from Whom
Landin Gerell	335 kg		Credit Bank
Sulpher	96 kg		Credit Bank
Andrin Badin	42 lt		Credit Bank
Syalin	220 lt		Credit Bank
Relidan	97,3 lt		Credit Bank
Dayon dinz	28,0 lt		Credit Bank
Malathyon	344,5 lt		Credit Bank
Kalthin S	50,0 lt		Credit Bank
Sulpher Agriculture	450 kg		Credit Bank
Kalthin oil	95,5 lt		Credit Bank
Flaton	14,5 lt		Credit Bank
Dimethweit	880,0 lt		Credit Bank
Lanit	71,4 kg		Credit Bank
Zalown	300,0 lt		Credit Bank
Andrain	31,0 lt		Credit Bank
Lowran	82,5 lt		Credit Bank
Bakal oil	62,0 lt		Credit Bank
Gardona	27,5 lt		Credit Bank
Setralin	7,3 lt		Credit Bank
Krakron	150,0 lt		Credit Bank

El Reiad Agrarian Reform Cooperative

Material	Amount	Time of Arrival	Received from Whom
Nitrate	25,000 kg	after 10-15 days	Credit Bank
Super Ordinary	30,000 kg	after 10-15 days	Credit Bank
Ammonium Sulphate	50,000 kg	after 2 months	Credit Bank

PRELIMINARY

El Reiad Cooperative

Material	Amount	Time of Arrival	Received from Whom
Urea (46%)	50,000 kg	December, 1980	Village Bank
Nitrate (33%)	75,000 kg	January, 1981	Village Bank
Super Phosphate	75,000 kg	No Date	Village Bank

El Thabet Cooperative

Material	Amount	Time of Arrival	Received from Whom
Nitrate	40 tons	November	Village Bank
Phosphate	30 tons	December	Village Bank
Seed	not available till now to obtain more		
Gazathion	25 lt		Credit Bank
Flaxon	576 lt		Credit Bank
Landin	150 kg		Credit Bank
Calthin oil	30,5 lt		Credit Bank
Hinozan	20,0 lt		Credit Bank
Dorasban	18,9 lt		Credit Bank
Syalin	183,0 lt		Credit Bank
Pakal oil	6,0 lt		Credit Bank
Dimethweit 40%	2,3 lt		Credit Bank
Diathin M 45	3,0 kg		Credit Bank
Microny Sulphate	20,0 kg		Credit Bank
Dawpon Dinz	13,0 lt		Credit Bank
Asitam f 34	13,0 lt		Credit Bank
Zilon	40,0 kg		Credit Bank
Kalthin S	25,0 lt		Credit Bank

El Wizaria Cooperative

Material	Amount	Time of Arrival	Received from Whom
Urea	311 sacks	10/1/1980	Agr. Develop. Bank
Nitrate 31%	345 sacks	10/1/1980	Agr. Develop. Bank
Sober (common)	91 sacks	10/1/1980	Agr. Develop. Bank
Sulphate	102 sacks	10/1/1980	Agr. Develop. Bank
Wheat Seeds	101 (ardab)	10/1/1980	Agr. Develop. Bank

PRELIMINARY

Annex 6

COOPERATIVE QUESTIONNAIRE # 1

Name of Coop _____ Location (draw sketch with boundaries)

Area Served _____ Years in Operation _____

Number of Member Farmers _____

List of Member Farmers (Systematic Sample)

NAME	FEDDANS OWNED	FEDDANS RENT
1.		
2.		
3.		
4.		
5.		
.		
.		
.		
N		

List of Administrative Personnel

NAME	POSITION	YRS. WORKING WITH COOP	PREVIOUS WORK EXPEREINCE	RESIDENCE	EDUCATION
1.					
2.					
3.					
4.					
5.					
.					
.					
.					
N					

PRELIMINARY

List of Board Members

NAME	OCCUPATION	AMT. OF LAND OWNED	AMT. OF LAND FARMED (RENT + OWN)	RESIDENCE	EDUC.	YRS. EXPERIENCE WITH COOP
1.						
2.						
3.						
4.						
5.						
.						
.						
.						
N						

SETTING:

(1) What do you think is the purpose of the cooperative?

(2) Which government agencies do you work with?

(3) Do you work with the leaders of the villages?
If so, with whom do you work?
If so, what are the types of activities you participate in?

(4) Please list the machinery to which you have access

NAME	OWNED/RENT	RENT FROM WHOM
1.		
2.		
3.		
.		
.		
.		
N		

PRELIMINARY

(5) Please list the material input (seeds, fertilizer, insecticides, etc.) which you have in storage.

MATERIAL	AMOUNT	RECEIVED FROM WHOM	RESEARCHER'S OBSERVATION OF THE CONDITION OF THE INPUT
1.			
2.			
3.			
4.			
5.			
.			
.			
.			
N			

(6) Please list the material input which you do not have in storage at this time but plan to store in the next few months.

MATERIAL	AMOUNT	TIME OF ARRIVAL	RECEIVED FROM WHOM
1.			
2.			
3.			
4.			
5.			
.			
.			
.			
N			

ACTIVITIES: ADMINISTRATION

(7) The Cooperative Leadership

- How are the administrative personnel chosen?
- How are the board members chosen?

PRELIMINARY

(8) Equipment

- How does the cooperative obtain various machines and other equipment?
- How is the equipment generally used?
- Is there a maintenance program for this equipment?
  If so, what is it?
- What are the problems which you have in maintaining the equipment?

(9) Inputs

- How does the cooperative obtain the various inputs?
- If a farmer wishes to obtain some seed, fertilizer or insecticide; what is the procedure he must follow? (Have the interviewer discuss in detail the steps which the farmer must go through in order to obtain the input for the following situations)

  a. For the standard allotment.
  b. For extra amounts

(10) Communication

- How is information about inputs spread throughout the area?
- Do farmers come by the cooperative to discuss problems with you?
  If so, who comes in and what do they discuss?
- Do you discuss problems concerning the farmers and their crops with members of other local organizations (i.e. village, bank etc.)
  If so, what problems do you discuss?
  If so, to whom do you talk to?

ACTIVITIES: PROGRAM

(11) Process of disseminating input to the farmers

- Suppose you receive some new fertilizer, seed etc. and you want to introduce it to the farmer; how would you do it?

(12) Administering laws

- Explain the procedure through which you administer the government's crop rotation pattern.

(13) How important do you think the cooperative system is in maintaining and improving Egyptian agricultural production?

(Probe for the overall belief and why he believes the way he does)

PRELIMINARY

Annex 7

Maps of the Kafr El Sheikh Cooperatives

ABO RAIA COOPERATIVE

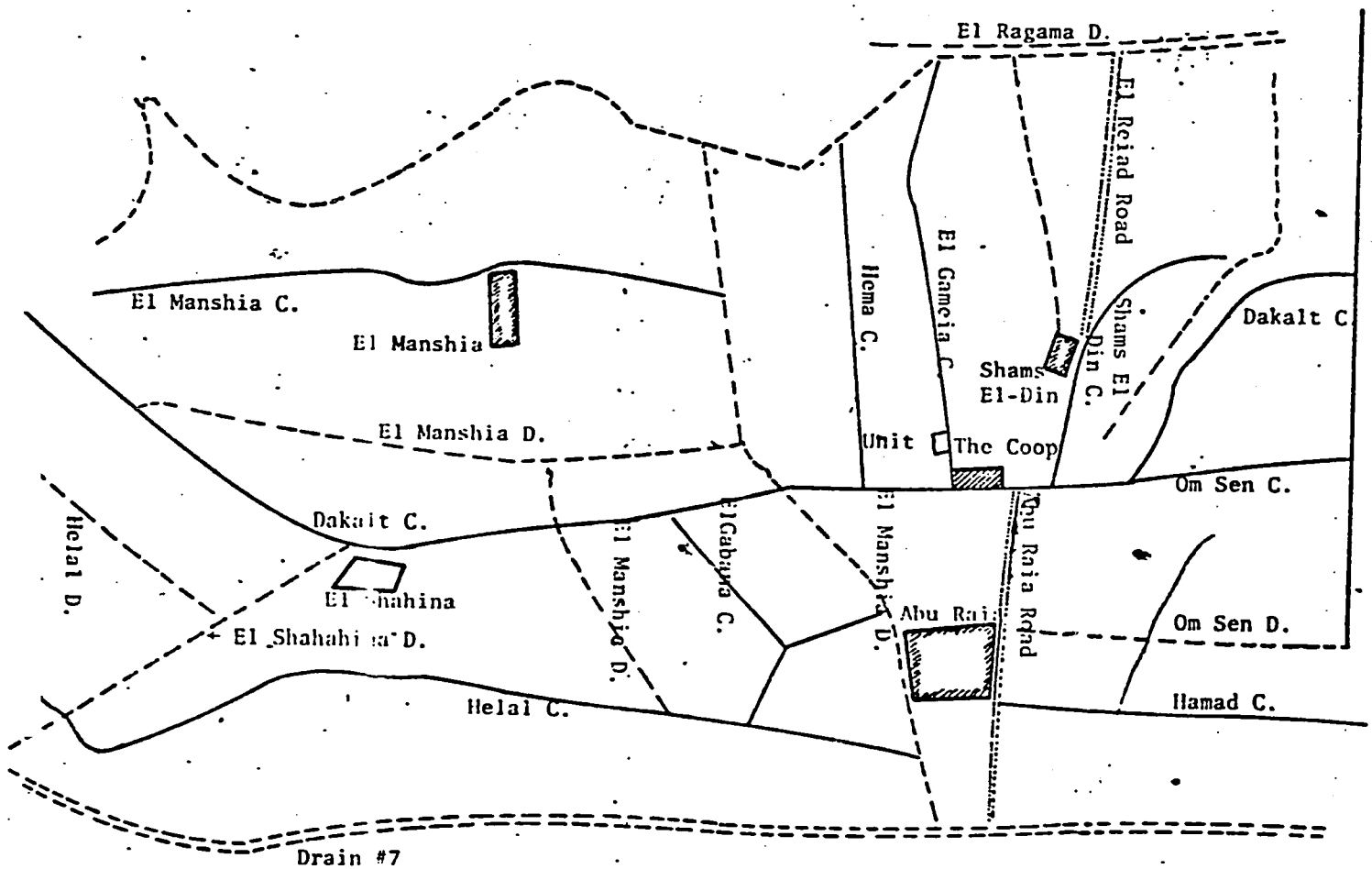

Location (sketch with boundaries)

PRELIMINARY

ABU MOSTAFA COOPERATIVE

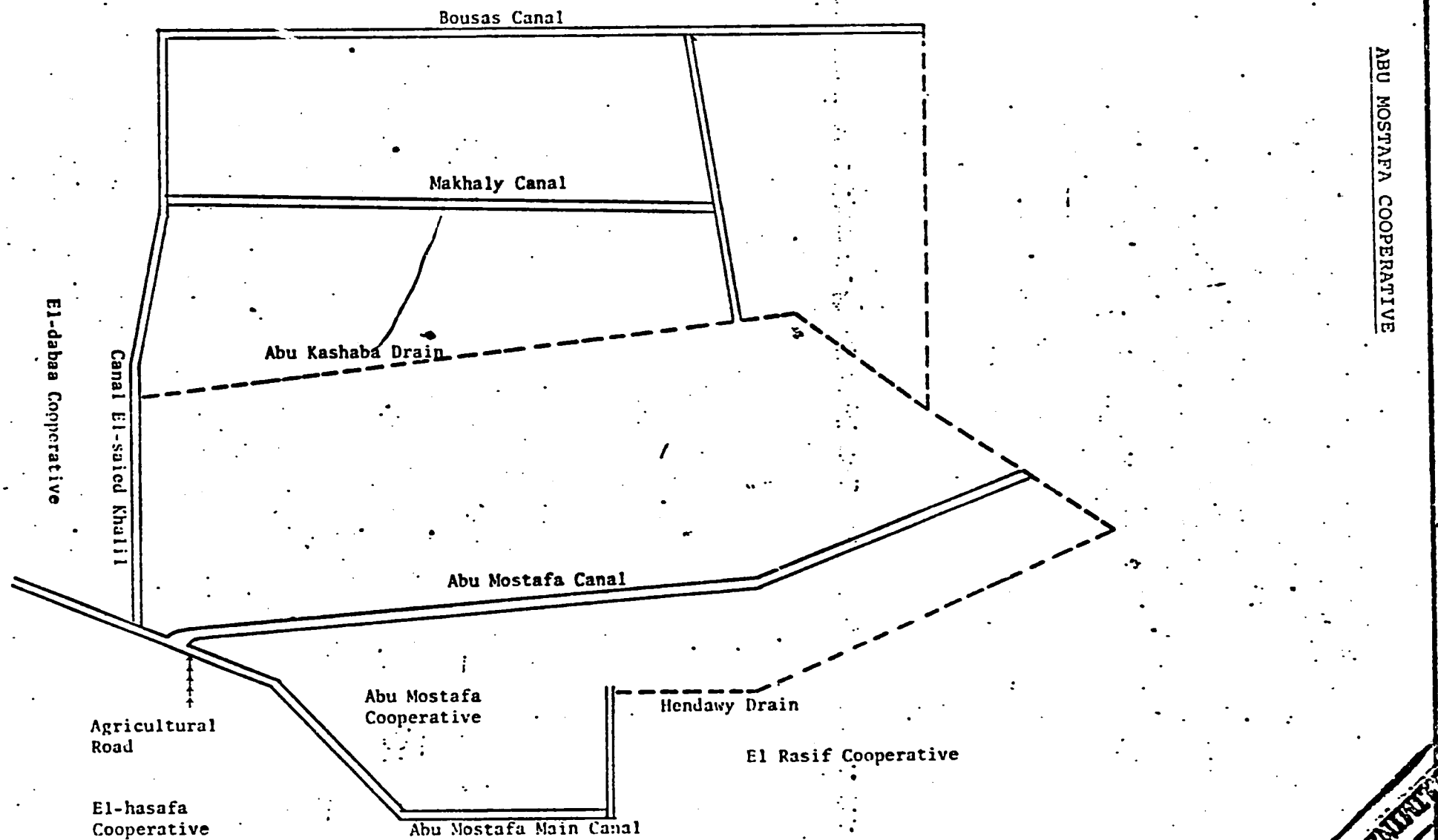

APPENDIX

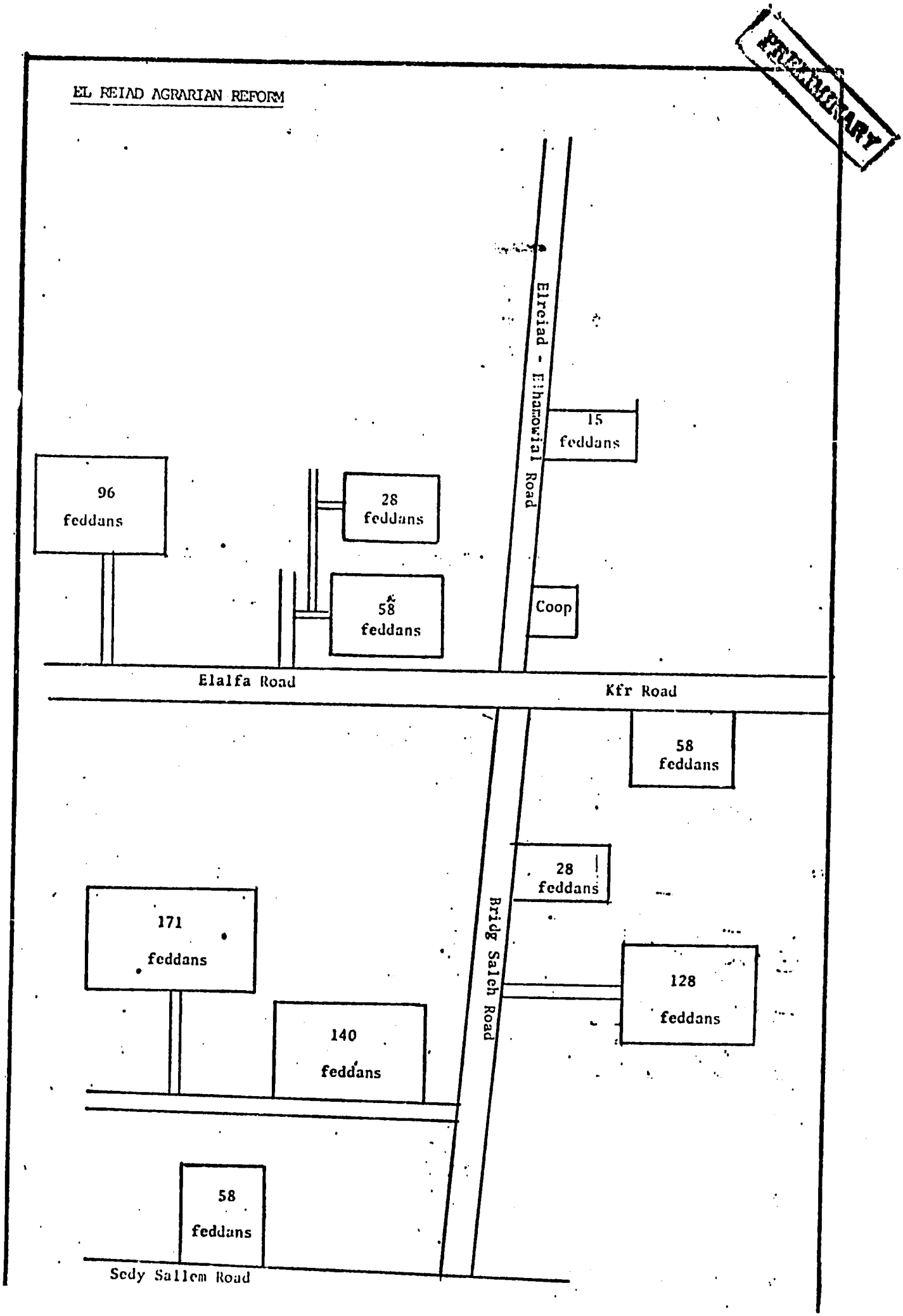
EL REIAD AGRARIAN REFORM
PRELIMINARY
Elreiad - Elhamowial Road
15 feddans
96 feddans
28 feddans
58 feddans
Coop
Elalfa Road
Kfr Road
58 feddans
28 feddans
171 feddans
Bridg Salch Road
128 feddans
140 feddans
58 feddans
Sedy Sallem Road

ELREIAD COOPERATIVE

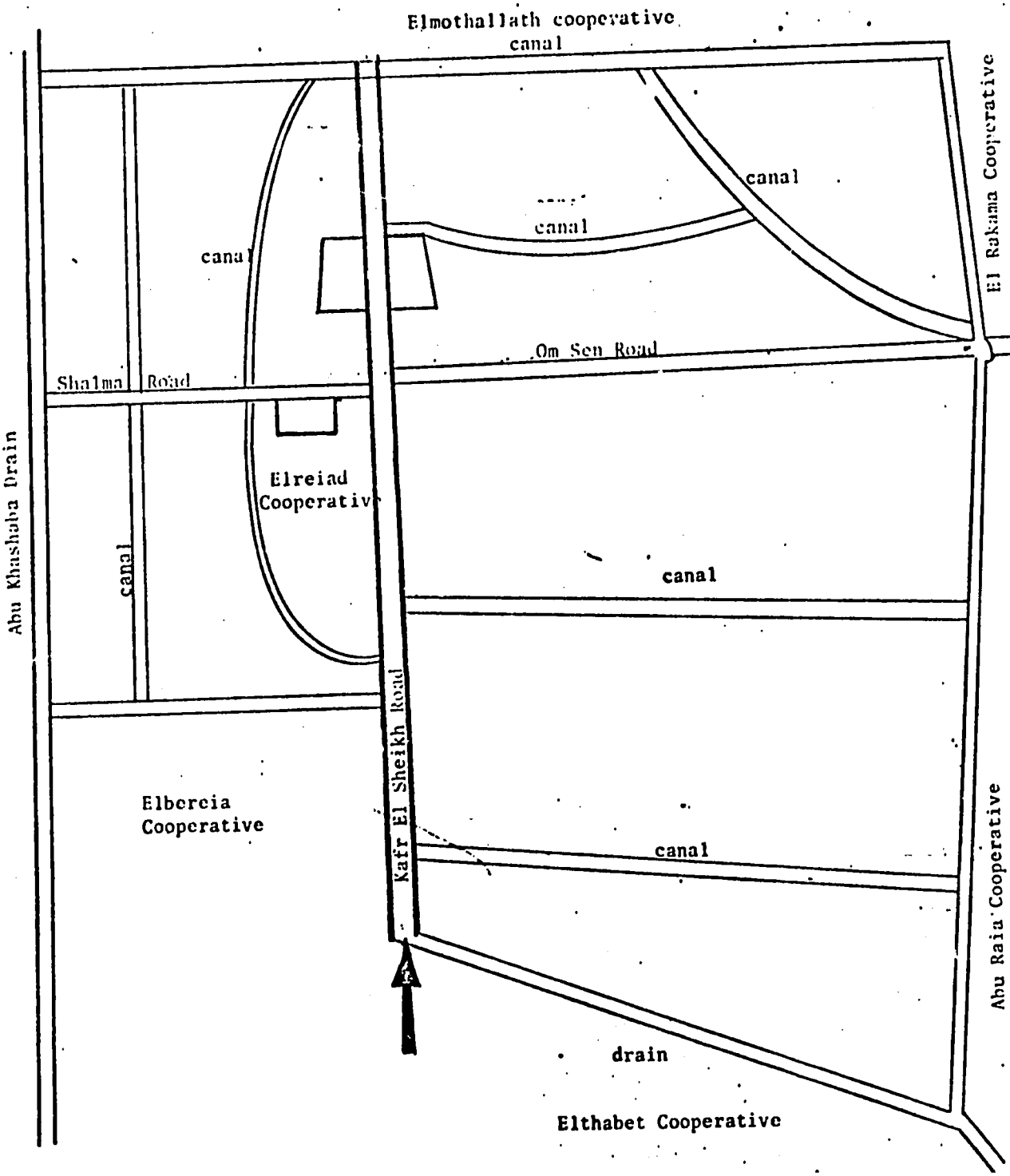

ARIAMOUN COOPERATIVE

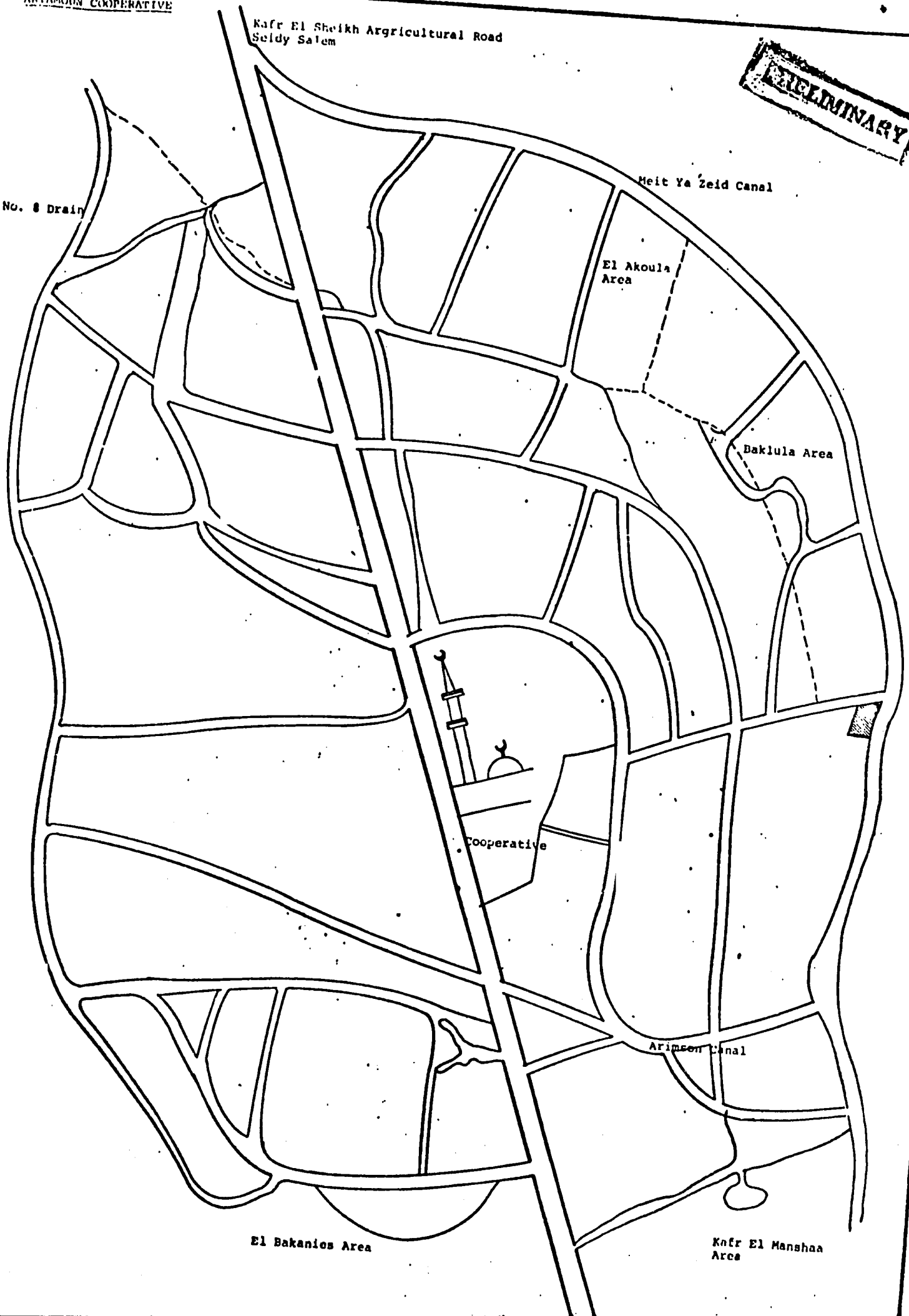

ELTHABET COOPERATIVE

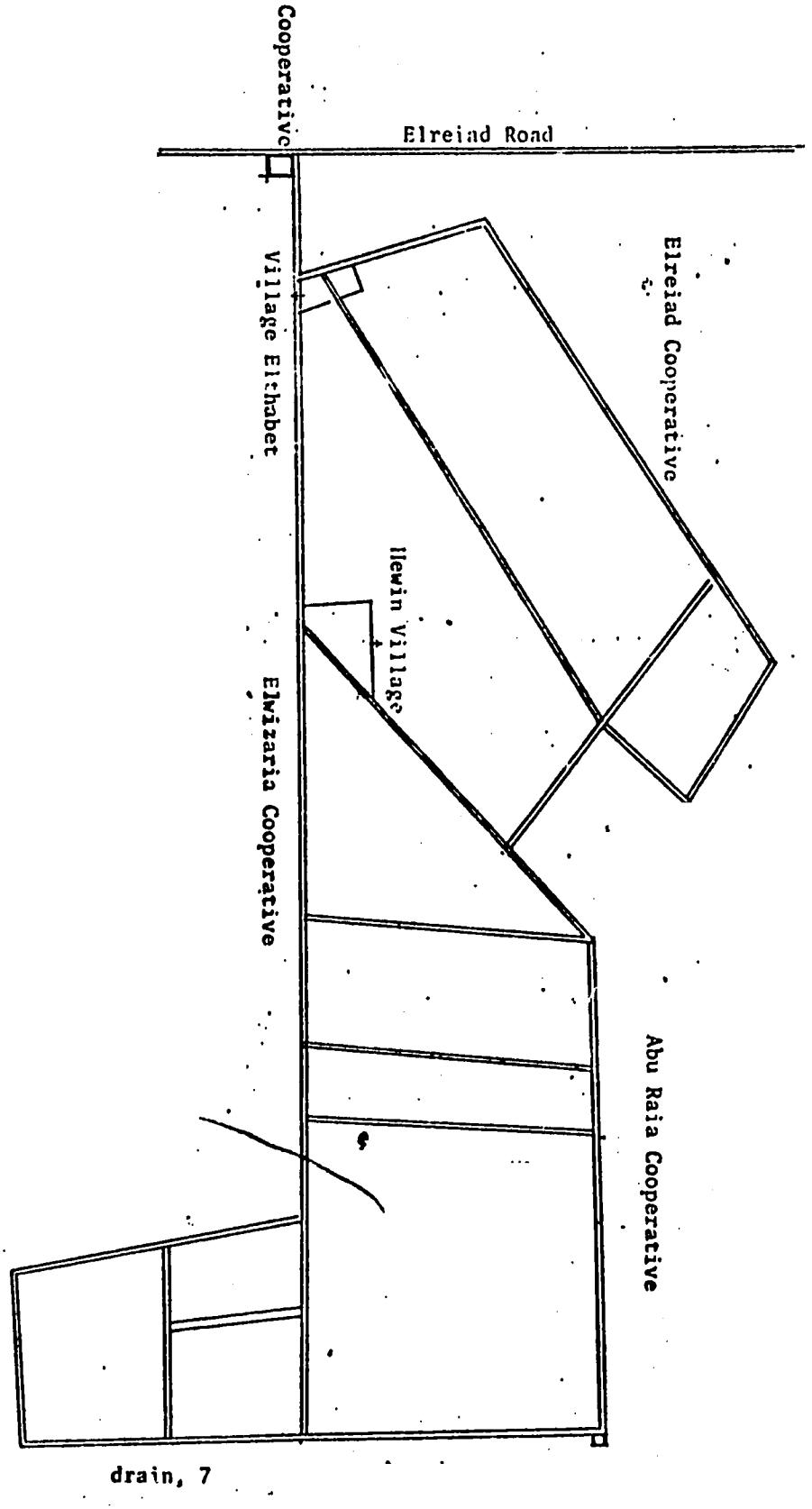

PROJECT NUMBER: 263001700053302
PROCESS: ACTION: DATES: INITIALS
CATALOGUE
ABSTRACT
COMMENTS
DATE

EL WIZARIA COOPERATIVE

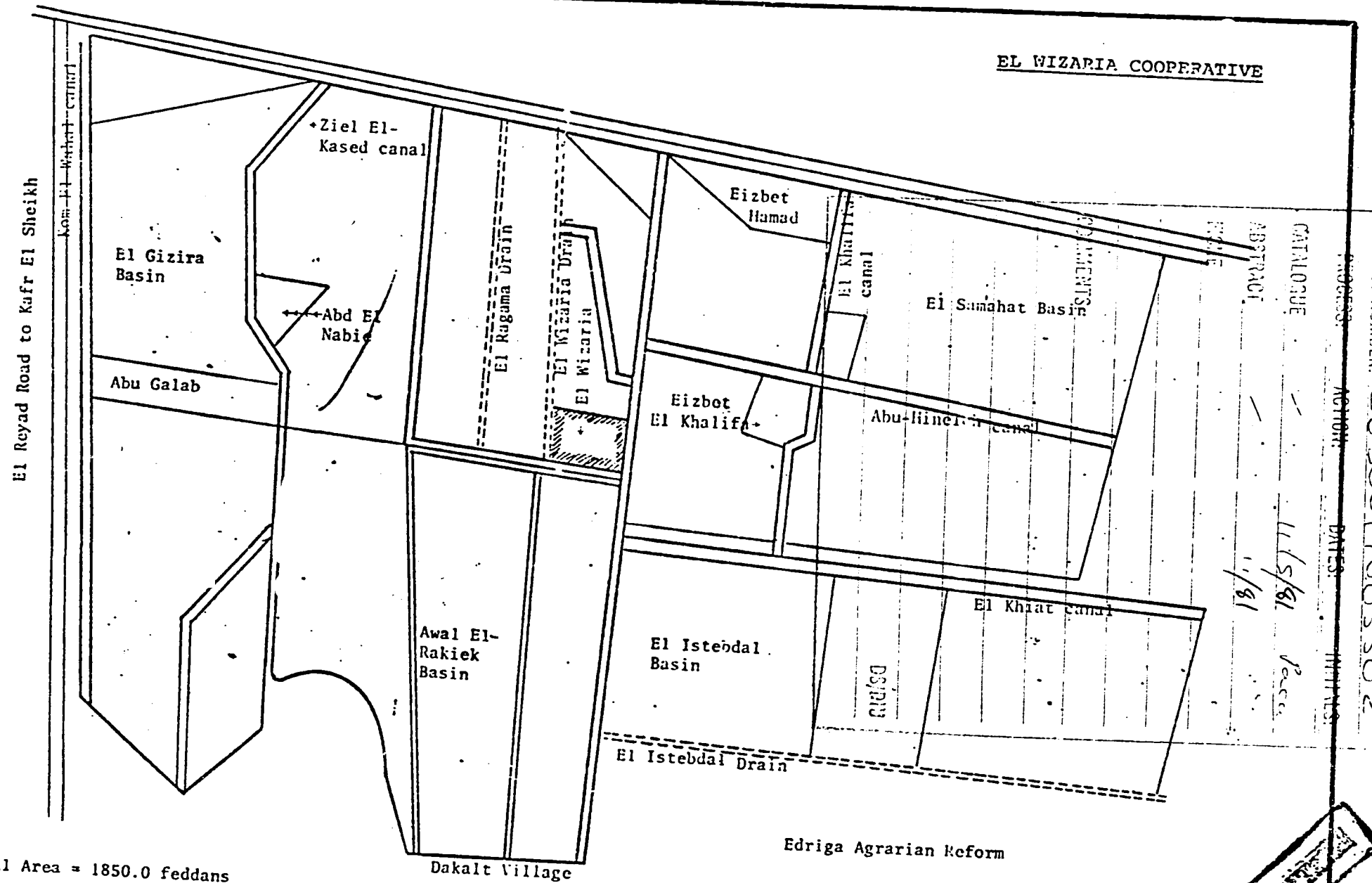

Total Area = 1850.0 feddans

PRELIMINARY