603-0013
PD-AAG-752-B1
603001300420 2

2

AGENCY FOR INTERNATIONAL DEVELOPMENT

PROJECT PAPER FACESHEET

1. TRANSACTION CODE: A (A = ADD, C = CHANGE, D = DELETE)

PP

2. DOCUMENT CODE: 3

3. COUNTRY/ENTITY: Djibouti

4. DOCUMENT REVISION NUMBER:

5. PROJECT NUMBER (7 digits): 603-0013

6. BUREAU/OFFICE: A. SYMBOL: AFR; B. CODE: 06

7. PROJECT TITLE (Maximum 40 characters): Energy Initiatives

8. ESTIMATED FY OF PROJECT COMPLETION: FY 86

9. ESTIMATED DATE OF OBLIGATION: A. INITIAL FY 81; B. QUARTER 4 (Enter 1, 2, 3, or 4); C. FINAL FY 82

10. ESTIMATED COSTS ($000 OR EQUIVALENT $1 –)

A. FUNDING SOURCE	FIRST FY B. FX	FIRST FY C. L/C	FIRST FY D. TOTAL	LIFE OF PROJECT E. FX	LIFE OF PROJECT F. L/C	LIFE OF PROJECT G. TOTAL
AID APPROPRIATED TOTAL						
(GRANT)	(448)	(1,072)	(1,520)	(2,092)	(1,908)	(4,000)
(LOAN)	( )	( )	( )	( )	( )	( )
OTHER U.S. 1.						
OTHER U.S. 2.						
HOST COUNTRY		765	765		1,350	1,350
OTHER DONOR(S)						
TOTALS	448	1,837	2,285	2,092	3,258	5,350

11. PROPOSED BUDGET APPROPRIATED FUNDS ($000)

A. APPROPRIATION	B. PRIMARY PURPOSE CODE	PRIMARY TECH. CODE C. GRANT	PRIMARY TECH. CODE D. LOAN	E. 1ST FY ___ F. GRANT	E. 1ST FY ___ G. LOAN	H. 2ND FY ___ I. GRANT	H. 2ND FY ___ J. LOAN	K. 3RD FY ___ L. GRANT	K. 3RD FY ___ M. LOAN
(1) ESF	742 B	878		2,000		2,000			
(2)									
(3)									
(4)									
TOTALS									

A. APPROPRIATION	N. 4TH FY ___ O. GRANT	N. 4TH FY ___ P. LOAN	Q. 5TH FY ___ R. GRANT	Q. 5TH FY ___ S. LOAN	LIFE OF PROJECT T. GRANT	LIFE OF PROJECT U. LOAN
(1)						
(2)						
(3)						
(4)						
TOTALS						

12. IN-DEPTH EVALUATION SCHEDULED: MM 06 YY 86

13. DATA CHANGE INDICATOR. WERE CHANGES MADE IN THE PID FACESHEET DATA, BLOCKS 12, 13, 14, OR 15 OR IN PRP FACESHEET DATA, BLOCK 12? IF YES, ATTACH CHANGED PID FACESHEET.

1 = NO
2 = YES

14. ORIGINATING OFFICE CLEARANCE

SIGNATURE: Alexander R. Love

TITLE: Director, REDSO/EA

DATE SIGNED: MM 09 DD 12 YY 81

15. DATE DOCUMENT RECEIVED IN AID/W, OR FOR AID/W DOCUMENTS, DATE OF DISTRIBUTION: MM DD YY

AID 1330-4 (3-78)

TABLE OF CONTENTS

I. SUMMARY AND RECOMMENDATIONS

II. PROJECT DESCRIPTION

A. Introduction
B. AID Objectives, Sector Strategy and Constraints
C. Project Purpose
D. Project Outputs and Inputs
E. Summary of Project Inputs
F. Project Beneficiaries
G. Relationship of Project to Djibouti Development Plan & CDSS
H. Relationship to AID/GROD Projects and Other Donor Projects
I. Conditions Precedent to Disbursement of Funds and Special Covenants

III. PROJECT SPECIFIC ANALYSES

A. Economic Analysis (Summary)
B. Social Feasibility Analysis
C. Technical Analysis (Summary)
D. Administrative Feasibility
E. Environmental Analysis (Summary)

IV. FINANCIAL PLAN

Table I. Project Cost Summary
Table II. Project Expenditures by FY
Table III. Costing of Project Outputs/Inputs
Table IV. Summary of Djibouti Expenditures
Table V. Summary Cost Estimate and Financial Plan
Table VI. Recurring Costs Analysis

V. IMPLEMENTATION

VI. EVALUATION PLAN

ANNEXES

Annex A: Technical Analysis
Annex B: Economic Analysis
Annex C: Environmental Analysis
Annex D: Logical Framework Matrix
Annex E: Scopes of Work for Technical Assistance/A and E Services
Annex F: Equipment Lists
Annex G: Construction: Revised Space Allocation and Cost Estimate
Annex H: AID Checklists
Annex I: GROD Request for Assistance
Annex J: Justification for Waiver
Annex K: Draft Authorization Package

PROJECT DESIGN TEAM

Thomas F. Cornell, AFR/DR/EAP, Project Officer
Wasil Chmilak, POLYTECH, INC., Engineer
Thomas Graham, POLYTECH, INC., Energy Planner
David Dibble, POLYTECH, INC., Institutions Analyst

E.A. Amundson, USAID/Djibouti, AID Affairs Officer

Lee Ann Ross, REDSO/EA, Economist
Robert Adams, REDSO/EA, Engineer

I. RECOMMENDATIONS AND SUMMARY

A. Recommendations

It is recommended that USAID/Djibouti be allotted $4,000,000 to undertake a five-year energy initiatives project, beginning in July, 1981, in collaboration with Djibouti's National Higher Institute of Scientific and Technological Research (ISERST). Allotment is requested in two tranches: a $2,000,000 grant in fiscal year 1981 and a second grant for $2,000,000 in fiscal year 1982, subject to the following waivers:

- source/origin waiver for four project vehicles and spare parts parts valued at $80,000;

- nationality waiver to include Geographic Code 935 and Djibouti for the $820,000 construction component;

- source/origin waiver for construction materials for the same construction contract.

The GROD counterpart financing will amount to the Djibouti franc equivalent of $1,350,000.

B. Summary of Project

The Djibouti energy initiatives project aims at assisting GROD to reduce part of its balance of payments disequilibria caused by the importation of fossil fuels by introducing a solar and wind energy and energy conservation capability. The project simultaneously endeavors to strengthen the critical link between economic development planning and requisite applied research and studies by strengthening Djibouti's single scientific and technological research institute.

Specifically, the project will assist in establishing the institutional capability within Djibouti's Scientific and Technological Research Institution, to plan, execute and evaluate alternative energy development and conservation programs.

The purpose will be accomplished by means of two essential thrusts of the project. Firstly, the project will undertake the immediate groundwork required for an eventual national conservation effort and a national energy sector strategy; and secondly, project will develop a capacity for development and evaluation of those alternate energy technologies which have not yet been considered in Djibouti's energy strategy.

The project strategy is to address the general constraints of ISERST to perform the role of assisting in the development of sound national energy options through its research and development activities, particularly in the areas of solar and wind alternative energy. These constraints are: (1) severe lack of information and data base necessary for analyzing both the production and use sides of the energy sector; (2) lack of trained personnel to assess the energy sector i.e., to collate and disseminate information for energy planning, identify solar and wind energy technologies appropriate to Djibouti and train subsequent staff to design, fabricate, install, maintain, and evaluate demonstrations of such technologies; and (3) the lack of physical facilities to ascertain availabilities of solar and wind energy resources and to fabricate or assemble alternative solar and wind energy devices.

The project will accomplish this purpose by providing:

1. Information and Analytical Base. To address the critical constraint to development of a renewable energy program in Djibouti, the project will develop a sufficient data base on both the socio-economic aspect of Djibouti's energy needs and potential uses as well as the technical data to determine precise information on wind and solar energy potential.

2. Prototype Use for Pilot Interventions. The project endeavors to provide ISERST with experience in developing alternative energy by means of ISERST's full participation in implementation of a series of pilot interventions using wind and solar prototypes. Once the required data base is established, ISERST personnel will plan, assemble, install, maintain and evaluate the prototypes. Six pilot interventions/prototypes have been identified by the project as a function of the highest priorities already established by the GROD as well as of the solar and wind potential recognized by the project analysis team:
   - windmill water pumps
   - electrical wind generator
   - solar distillation
   - solar fish-drying
   - solar fish-smoking
   - photovoltaic water pumping

   The technical and needs data collection, mentioned above, will confirm these interventions, determine sites for the prototypes in collaboration with other interested GROD agencies, determine appropriate size and specifications for the prototypes, and identify possible additional prototypes which would contribute to achievement of the project purpose.

3. Assessment and Dissemination of Research Results. Once the prototypes have been installed and functioning, the project will provide for technological assessments of the demonstration prototypes. These assessments will then serve as the basis for determining what prototypes are suitable for commercialization or widespread use and under what circumstances. Once these assessments have been made, the project will provide for dissemination of the results to assure eventual adoption by government and private enterprises.

4. Energy Conservation Component. Recognizing that only about one half of the country's present oil-based consumption is substitutable by other forms of energy, the project proposes an energy conservation component. This modest intervention is seen as an initial first step in introducing and sensitivizing Djiboutians to the need for, and methodology of, a more significant conservation effort at a later date. This conservation component will consist of small scale surveys of representative energy users; initial proposals for feasible modifications of present and future facilities in order to reduce energy consumption; and support in local building materials research to identify energy-saving building designs and materials. An important element of the conservation component will also be the design of the project-funded Earth Sciences building. This building will be designed to be a demonstration model of energy conservation.

5. Final Report to Government. The project will also result in a final report to GROD policy makers. It will be one of the important bases on which the to-be-established National Energy Commission develops its national energy strategy. It will assist, inter alia, in developing policies to coordinate wind and solar energy matters with the geothermal activities of ISERST; national potential for more efficient use of all types of energy; and guidance on energy implications of possible public investments.

To accomplish the above outputs, the project will provide:

(a) 58.5 PM of Technical Assistance, ($780,000) in the form of a long term mechanical/electrical engineer (4 PY); and short-term experts in energy needs assessment and conservation;

(b) Commodities ($862,000) such as solar and wind prototypes ($490,000), laboratory, office, and workshop equipment as well as certain supplies ($372,000);

(c) Construction of the Earth Sciences Division of ISERST ($900,000), of which $80,000 has been budgeted for A and E services to provide designs and plans for the Earth Sciences Building, envisaged to be a model for future energy conserving buildings;

(d) Other costs ($480,000), which include major maintenance of vehicles, rental of temporary office space;

C. Summary Findings

The project analyses find that the project is consistent with AID policy and program objectives. The project is also consistent with Djibouti's development objectives and strategies. The project will also yield positive economic benefits by reducing oil imports and by reducing cost of, or providing access to, energy sources for remote and/or poor households and profitable small-scale enterprises. An important spin-off will be the reinforcement of the process of using studies and applied research in support of socio-economic planning, thereby assisting in added efficiency to use of scarce investment funds. The project analyses also find the project to be socially and environmentally sound.

Implementation arrangements have been received and found to be adequate and appropriate to the project. The project takes into account that both the Republic of Djibouti and ISERST are new; that there is currently no energy policy or plan; that ISERST is understaffed and inexperienced; that other ministries and agencies as well as other donors have on-going operations in energy; and that inter-agency and inter-donor competition is strong. The project complements other agencys' and donors' activities and uses the capabilities of other GROD ministries by providing precisely the coordinating mechanism necessary for present and future interventions in fossil fuel energy replacement. The project has also taken into account the significant time and manpower constraints of USAID/Djibouti.

Finally, the project meets all statutory and legal criteria including fulfillment of FAA 611 (a) requirements and 611 (e) certification.

D. Project Issues

1. Is USAID/Djibouti capable of monitoring and managing the project to the extent required for successful project implementation?

The current project will virtually represent a doubling of the size of the USAID/Djibouti project portfolio. The fact that the Djibouti Mission runs with a high degree of efficiency and effectiveness in its relations with GROD with only one USDH and two national direct hire hide the fact that the Mission is stretched to its limits.

Further, the institution-building nature of the project and its diverse components, require considerable monitoring and backstopping. This need for direct AID involvement is further necessary because of the difficulties in coordination both within GROD and between AID and GROD.

Thus AID/W's commitment to this project must be parallel to, and evidenced by, providing a second highly qualified USDH to USAID/Djibouti immediately. This USDH should have strong skills in project management and monitoring.

II. PROJECT DESCRIPTION

A. Introduction

Djibouti is a small country strategically located at the mouth of the Red Sea. Its area is about 23,200 square kilometers or about the same as Massachusetts. The generally-agreed upon population figure for Djibouti is approximately 300,000 permanent residents. The great bulk of that population (65%) lives in the capital city. The remaining rural segment consists of poor nomads and approximately 25,000 refugees. The hinterland represents an extension of the desert of Ethiopia and Somalia, is semi-arid to arid with average rainfall of 100 mm and average temperatures of 96°F. Topography varies from steppe to desert.

The resource base of the country is meager. Soils are poor. There are few identified mineral resources and no surface water. However, it has been confirmed that there are ample, though only partially exploited, reserves of underground water originating from the Ethiopian plateau. Lack of economic development has prevented exploitation of any sizeable activity in the primary sector. Nevertheless, preliminary studies have identified some potential for marine fishing, salt, cement and for geothermal energy.

The economy of Djibouti is service-oriented. This tertiary sector accounted for 80% of GDP in 1980. The primary sector of exploited natural resources accounts for only 3% of production. Industrial activity is embryonic and accounts for 17% of GDP. A number of light industries have been set up, including bottling oxygen, acelytane, tiles, paints, joinery, dairy products. Plans for cement, tannery and brick production are being reviewed. However, the major contributors to gross domestic product are services rendered by the excellent port, railway, airport, and by a large expatriate military, technical assistance and commercial population.

Such a tertiary type of economy based on Djibouti's role as a strategic transit center for trades is import-intensive. The 1980 trade balance showed a deficit of approximately $159,000,000. In recent years exports have covered a range between 28% to 11% of imports for 1970-1978. This large negative imbalance is financed by a system of budget support and development assistance from abroad. Trade deficits are largely financed by expatriate and extraterritorial payments. For example, out of the 1980 trade deficit figure of $159,000,000, almost 75% is financed by services considered to be rendered outside the country; another 15% comes from direct assistance from France; and the remaining 10% is financed by other foreign assistance. The entire investment budget is financed by foreign donors. Finally, the sources of supply for most of the imports have become increasingly distant because of political problems in the immediate region.

Consistent with the above pattern, up to 98% of Djibouti' inanimate energy resources have to be imported. Present statistics do not properly quantify the proportion of energy imports to the total import bill, because the bulk of imports and exports of the country are dominated by transfer flows to extraterritorial users whose impact on the economy of the country is difficult to analyze using the conventional national accounting methods.

REPUBLIC OF DJIBOUTI

POPULATION DISTRIBUTION

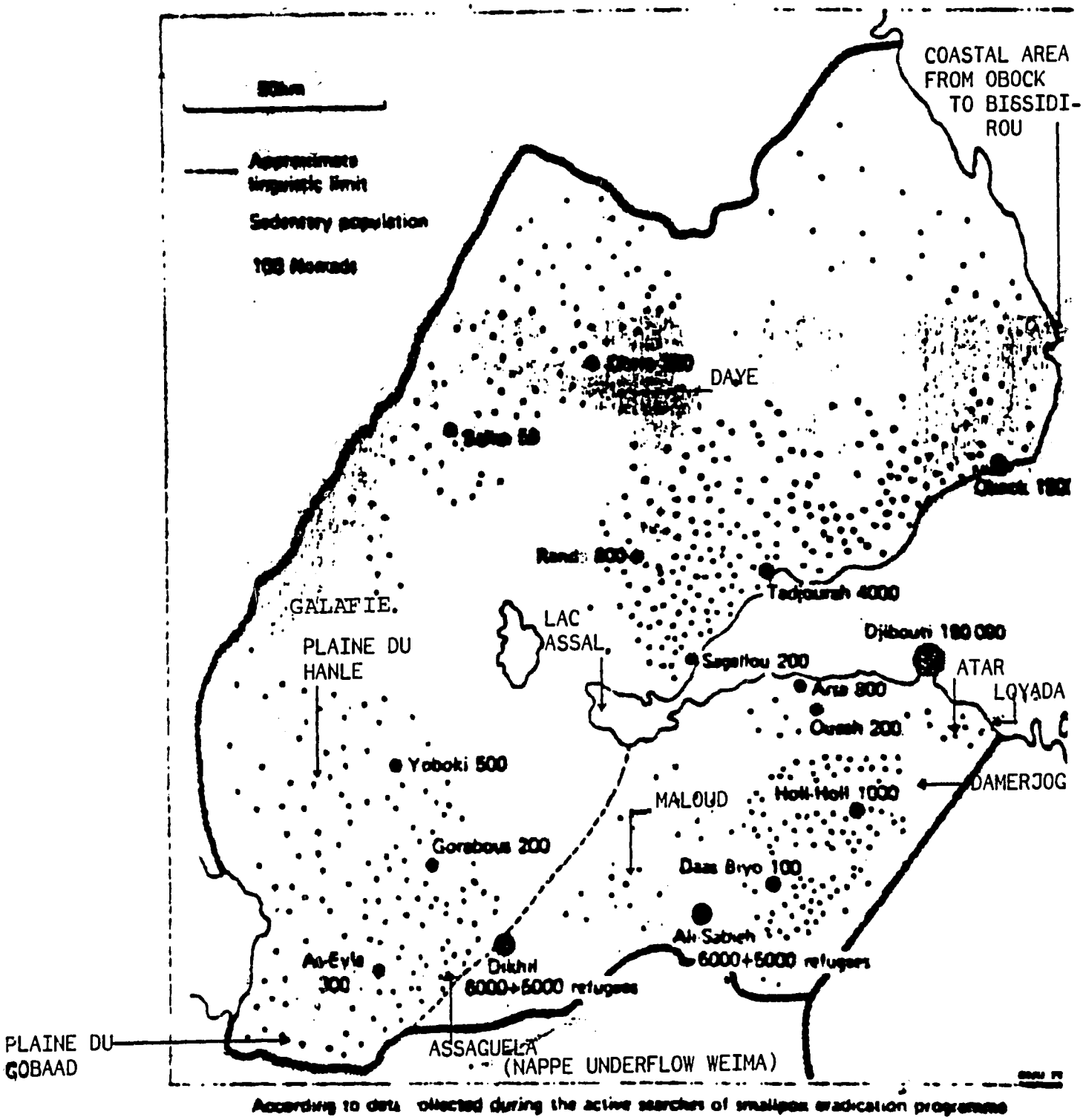

According to data collected during the active searches of smallpox eradication programme

= Proposed sites for wind measurements

In 1979, Djibouti had to finance more than $10 million for energy imports, while its total export earnings were slightly more than $11.5 million.

Electricity generation accounts for the single greatest consumer of imported fuels. Installed capacity for thermal electricity in the capital is 30.7 MW. By May 1982 this capacity will be increased by 4.3 MW. By 1985, additional 10.6 MW is projected to support a planned cement factory, dairy, tannery and a middle income housing project of 5,000 new units. The projected increased supply will be met by largely foreign donor procurement of 3 additional generators for the central power station. Electricity authorities report that 51% of the local price per kilowatt hour represents fuel costs. Quantity of fuel used has jumped significantly in the two years 1979-1980, that the city power plant has had to double its fuel load.

Djibouti's entire energy sector is characterized by the current dependency on only one type of energy source, exhaustible fossil fuels. Even most cooking, including some of that done by refugee families in the camps, is done with kerosene. That portion of the rural area which uses firewood or charcoal imported from Ethiopia is insignificant. Thus, Djibouti is exposed to the high risk of future trends of rises in oil prices and requirements to invest further large capital sums in fossil-fuel-using conversion technologies. It is apparent that covering the ever-increasing oil import bill will divert investment funds for economic development.

A look at the nature of Djibouti's fuel imports, however, indicates a potential for diversification and substitution. It has been estimated that up to 51% of current imports may be substitutable. And of the remaining 49%, significant reductions in fossil fuel use may be obtained by relatively simple conservation methods.

B. AID Objectives, Sector Strategy and Constraints

No Development Plan as such currently exists for Djibouti. The Government of Djibouti has articulated its development objectives on several occasions, most recently at the UNDP-sponsored International Donors' Roundtable on Djibouti held in February, 1981. The government has stressed that its economic development strategy is one of import-substitution led growth, both in agriculture and industries. To the extent possible, GROD claims that this strategy at the same time aims at the development of smaller scale enterprises to absorb currently abundant labor supply and to develop the countryside in an effort to simultaneously stem the migration trend to the capital.

Though no comprehensive energy policy as such yet exists in Djibouti, the government has begun addressing the energy question with a two-pronged approach:

On one hand, GROD aims to develop its significant indigenous geothermal potential to replace that portion of fossil fuels used to generate electricity (30 MWh maximum capacity in 1980).

On the other, GROD proposes to develop a renewable energy production base to meet specific agricultural, possible industrial, and human needs of rural areas which will not have access to the electricity grid which will be eventually provided by geothermal energy.

Efforts by a multitude of members of the international donor community and various executing agencies within the GROD are currently being undertaken to support this GROD approach in virtually all areas of development of non-fossil fuel energy production: geothermal, solar and wind.

The immediate need in developing Djibouti's energy production potential is to centralize, coordinate and reinforce energy research and development within one responsible agency.

In addition to the coordination of research results, a second important gap in the development of a comprehensive national energy approach concerns current neglect of the consumption/conservation aspect of an energy strategy. As mentioned above, development of geothermal energy is the major thrust of Djibouti's energy import substitution program. Yet estimates regarding the percentage of electricity consumption of the total imported fossil fuels bill is only about 43%. This demonstrates that a prudent governmental energy research capacity must be directed not only to the development and coordination of production-related information, but also to the demand/consumption side of the equation, particularly the conservation aspect. Yet because the conservation aspect is new to GROD, the introduction of conservation studies and plans will require caution.

Section II F and G details those specific GROD and AID programming objectives that this project addresses.

In general, USAID/Djibouti's programming approach is to seek within the Government's planned programs, projects which meet basic human needs. Highest priority is given to fish culture and provision of water supply for human consumption.

This project contributes towards this approach by helping to provide, in the immediate future, the basis for a long-term development capacity to assess and provide for basic needs such as potable water, and preventive health, and for development of smaller-scale enterprises.

Sector Goal

The project's goal is to reduce the adverse impact of fossil fuel imports on Djibouti's balance of payments thereby freeing up scarce resources for investment in Djibouti's economic and social development. The subgoal is to assist the GRCD in providing high quality applied research capability in support of the social and economic objectives of the country. The linkage between a strong practical orientation to research and development, national planning and national social and economic development is a critical one for the Republic of Djibouti. Djibouti's natural resource base, including water and soils, is a meager one. Those few natural resources which are exploitable must be well understood, as well as the fragile environment in which they exist. Applied research, which examines the social and environmental consequences of important developmental interventions, must accompany the economic and financial studies which are undertaken. The project will thus respond to Djibouti's articulated development objectives both in general and in the energy area in specific.

C. Project Purpose

The purpose of the project is to assist the GRCD in establishing the institutional capacity to collect and organize basic energy information, to direct testing of various alternative energy technologies and to assist in developing policy options concerning energy production, consumption and conservation.

The purpose will be accomplished by means of two essential thrusts of the project. Firstly, the project will undertake the immediate groundwork required for an eventual national conservation effort and a national energy sector strategy; and secondly, project will develop a capacity for development and evaluation of those alternate energy technologies which have not yet been considered in Djibouti's energy strategy.

Strategy

The project strategy is to address the general constraints of ISERST to perform the role of assisting in the development of sound national energy options through its research and development activities, particularly in the areas of solar and wind alternative energy. These constraints are: (1) severe lack of information and data base necessary for analyzing both the production and use sides of the energy sector; (2) lack of trained personnel to assess the energy sector, i.e. to collate and disseminate information for energy planning, identify solar and wind energy technologies appropriate to Djibouti and train subsequent staff to design, fabricate, install, maintain and evaluate demonstrations of such technologies; and (3) the lack of physical facilities to ascer-

TABLE I: DJIBOUTI ENERGY INITIATIVES PROJECT APPROACH

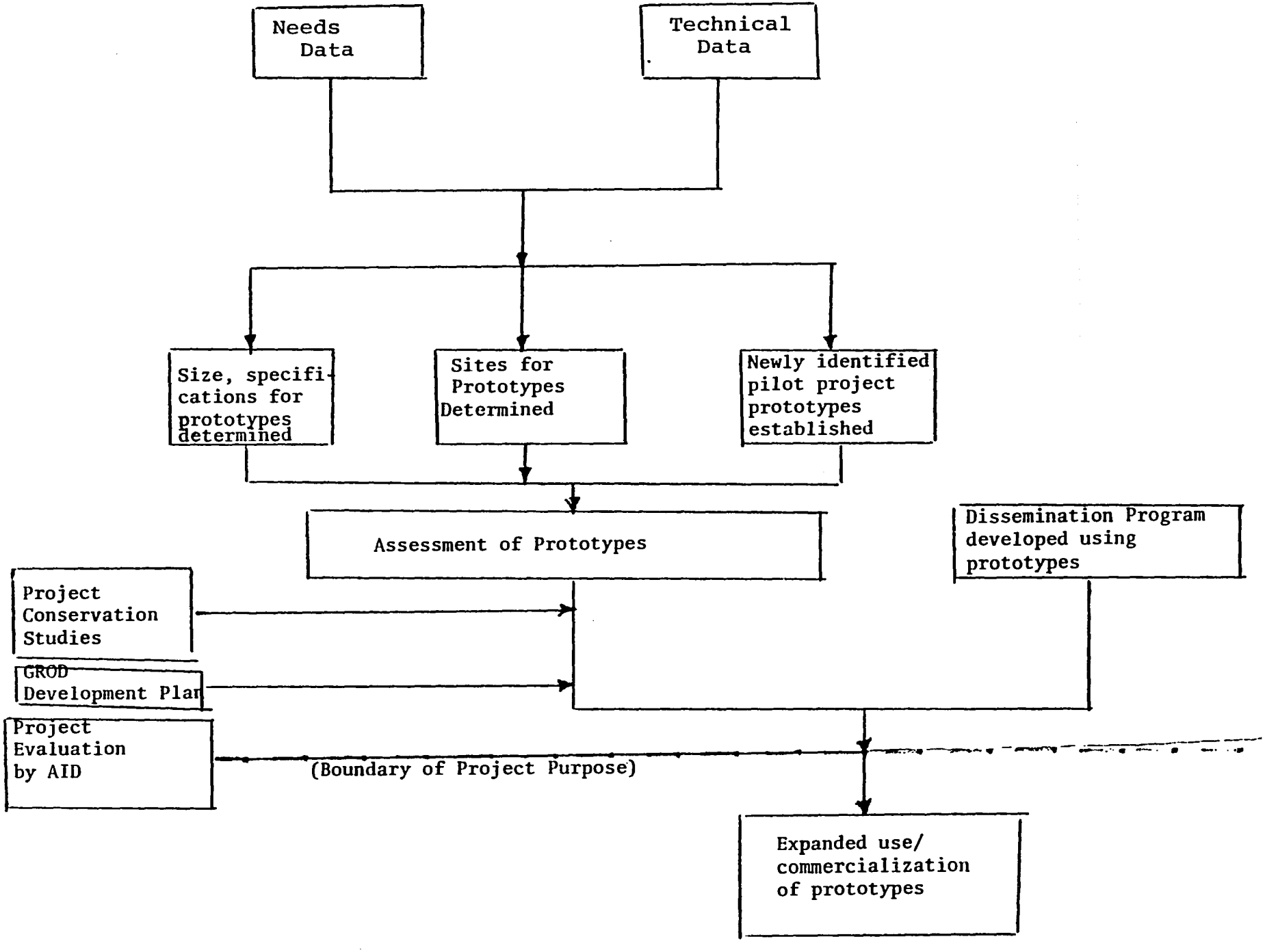

tain availabilities of solar and wind energy resources and to fabricate or assemble alternative solar and wind energy devices.

The strategy of the project could then be described as follows:

- Establish the requisite data and analysis base concerning general energy utilization in the country as well as potential future utilization.
- Establish the requisite data and analysis base concerning factors affecting technical and economic favorability of specified alternative energy technologies.
- Provide necessary training in methodology, data collection and analysis within ISERST to assist in acquiring the necessary data and analysis bases mentioned above and to continue to do so.
- Design, assemble and test prototype solar and wind equipment in cooperation with potential future user agencies and enterprises, and further develop prototype renewable energy models in sectors where general end use has been established as promising from an economical and technical standpoint.
- Provide equipment to accomplish initial aspect of above.
- Train local staff in the design, assembling, on-site installation and maintenance of above prototypes.
- Use information gleaned from the collected economic data, resource data, performance and maintenance data on the pilot project prototypes to provide input into GROD energy policy options in the areas of production and conservation.
- Establish an information dissemination mechanism within ISERST to assure that all available information on alternative energy use and conservation is available to potential users as well as the general public.
- To establish an evaluation capacity within ISERST and evaluate the prototypes, against conservation campaign and program goals.

End of Project Status (EOPS)

By project year 5, ISERST will have a fully functioning Energy Section within the Earth Sciences Division, consisting of a host-country chief, a host-country assistant, and over 5 trained counterpart staff members. This unit will be able to provide, with limited or no expatriate assistance, GROD decision makers with reliable and timely information on trends of energy consumption and production, and recommendations for further conservation efforts. Further, the division will be able to autonomously plan, execute, maintain and evaluate experiments in the field of renewable energy, and be able to make sound recommendations to interested governmental and non-governmental agencies concerning viable alternative energy technologies to accomplish required tasks. Linkages will be established or reinforced with (a) other national or international organizations interested in alternative energy research; and (b) implementing agencies and development agencies in Djibouti.

By end of project, ISERST will be issuing "five year projects" or "plans" on its own alternative energy research and development programs.

Finally, ISERST will have developed experience in implementing an applied research project, from its planning phase through its evaluation phase. This implementation will include experience in international contracting procedures, in commodity procurement, as well as planning, monitoring, evaluating and reporting to government on applied research projects.

To accomplish the project purpose, six important assumptions have been made:

- That GROD will increasingly appreciate the critical role of applied research in attaining national, social and economic goals in light of Djibouti's limited resources and fragile ecology.
- Development of renewable energy will remain a priority of the government;
- GROD will reinforce its stated commitment to its rural development and small scale enterprise development objectives by aligning those policies influence such development.
- GROD has mechanism, in addition to its pricing policies, to promote eventual wide-spread use of successful wind and solar energy prototypes.
- GROD and International donor pressure for visible and/or glamorous interventions prior to proper feasibility studies abates.
- AID will provide to USAID/Djibouti as planned the second USDH with strong skills in project management and backstopping.

D. Project Outputs and Inputs

1. Output No. 1: Informational and Analytical Base

Lack of economic and technical data is one of the greatest constraints to development and implementation of projects in Djibouti. Thus, as an initial output, the project proposes to develop a sufficient data base on both general energy needs and alternative energy potential to allow further work in a comprehensive energy program. Once the basic data are collected, selection of sites can be made and specifications for the prototypes can be drawn up. Concurrently, ISERST will also be in the process of developing the institutional capacity to autonomously carry out such research in the future.

Specifically, the data bases will consist of:

(a) Collecting data on quantities of energy sources in Djibouti. The project will collect data on wind velocity and pressure and on solar radiation.

(b) Identifying appropriate conversion technologies from energy sources into energy forms, e.g. kilowatt hours of electricity, or calories of air heat per cubic meter per second.

(c) Determining socio-economic needs and corresponding quantities of energy needed to meet such needs, e.g. liters of water and kilograms of fish to be preserved for prolonged storage.

(d) Identifying appropriate energy end use technologies in terms of their efficiency in meeting the established needs e.g. most efficient pumping, distribution, air heating/drying, refrigeration and lighting.

Data for (c) above will be accomplished by means of a one month energy needs assessment, which will be carried out in cooperation with ISERST's Social Sciences Division. Aspects (a), (b) and (d) above will be addressed by provision of engineering analysis of technical data obtained through the above studies.

The end result by Project Year 3 will be a set of documents issued by ISERST on identified needs for, and sources of, renewable energy which will then serve, inter alia, as the basis of selection of sites for the project's major renewable energy prototypes; for drawing up of prototype specifications; and for identification of possible additional prototypes.*

In order to achieve the data base output, the project will provide: a long term (4 PY) engineer who will serve as project chief of party during entire project and who will, inter alia, provide the engineering and technical input into the collection of the baseline data as needed; and short term technical assistance (3.5 pm) of a specialist in energy assessment to undertake the one-month needs survey. A detailed description of the duties required for both the electrical/mechanical engineer to accomplish the baseline data output and the short term energy assessment specialist are included in Annex E.

In addition to the TA assistance, the project will provide commodity and operational support for carrying out needed surveys. Commodities will include wind and solar testing equipment, temporary office space and supplies, calculators, vehicles, and extraordinary operation expenses for surveying, enumeration and coding. A short training period for survey execution is also foreseen.

---

* Solar prototypes will be introduced prior to completion of base studies given that engineer has determined fish drying using solar technology low risk, hi-impact intervention.

The Government of Djibouti will provide counterpart supervision from within ISERST's Division of Social Sciences as well as personnel for surveying, enumeration and coding.

We assume that, in order to achieve the baseline data base:

(a) ISERST will receive necessary authorization to carry out surveys and measurements;
(b) Other agencies such as the Meteorology Department will cooperate with ISERST;[1]
(c) That limited but qualified Djiboutian personnel can be obtained from within and outside ISERST to work as statisticians, surveyors, enumerators, etc.[2]

2. Pilot Interventions/Prototype Research

This project endeavors to establish ISERST know-how and experience in developing alternative energy alternatives. Once the required data are in place the project will develop this know-how and experience by means of a series of prototypes installed and running on sites chosen for their usefulness in demonstration and replicability. Six pilot interventions using prototypes have already been identified as a function of the GROD priority on providing water and support to rural populations. It is anticipated that other smaller-scale interventions which are equally appropriate but not yet identified will also be provided under the project.

Windmill water pumps will be provided and installed at a site or sites where the previous data collection effort has ascertained the presence of water and a serious drinking water shortage. The total water production capacity of the windmill intervention will be approximately 512m 3/day. The size of the windmill water production pilot intervention is a function of Djibouti's immense immediate and predicted water needs, the variety of demographic and topographic features in the Republic of Djibouti, and the significant indigenous energy potential that wind presents for Djibouti. ISERST will provide installed windmill water pumps to the Rural Engineering Office, Genie Rural, which is the agency responsible for providing rural waterpoints.

Electrical wind generator and refrigeration equipment with controls. These devices will be installed by ISERST in collaboration with the Ministry of Agriculture's Fisheries Service, at a remote coastal area or areas where fishermen can store and freeze their

1 The Meter and Genie Rural are providing similar assistance in support of the German Government's water resource inventory.

2 Needs survey is scheduled for summer months when ISERST traditionally brings on high school students to assist it in archaeology digs, studies, etc.

catch for two or three days before the cooperative pick-up boat arrives to transport to market. Total capacity for this pilot intervention will be approximately three tons per day. Daily pick-up would not be economical.

Solar stills. One or two simple solar panels will be installed in remote regions of Djibouti where wind generated water is not economically or technically feasible. An illustrative example of such areas is the Island of Mascale where people are currently harvesting red algae, "Euchema Spinosum," from which a jelling agent is extracted. Another example are the remote fishing camps along Djibouti's coast. Provision of water stills for drinking purposes at such will avoid the disruptive inconvenience and significant expense and loss of productivity in having to make frequent trips to the mainland for drinking water.

Photovoltaic water pumping. A station of medium capacity of up to 1.5 kilowatts will be installed by ISERST in collaboration with Genie Rural at a location that is easily accessible and where there is a serious shortage of drinking water for human consumption only. The needs assessment will determine the cost-effectiveness of this intervention. In addition to residential water users, the trainees, interns and staff of ISERST will learn how solar electricity can be exploited for water pumping.

Solar units. Two modest interventions will be undertaken as soon as possible after the beginning of the project because of their importance to other ongoing projects. Solar fish-drying and solar fish-smoking.

Solar panels with controls for fish drying. One or two flat panels for solar air heating collectors will be installed for the Ministry of Agriculture's Fisheries Service as well as support equipment such as a drying tower. The benefit of this process will be to prolong storage time for fish, not only for later pick-up; but also, for later wholesale and retail sale.

Solar panels with controls for fish smoking. One or two flat panel solar air heating collectors will be installed again for the Fisheries Service. A smoke tower needs to be built, onto which a flat type solar panel that is heating it will be connected. The hot air by convection will rise through the smoke tower, and will accelerate the process of fish smoking. A smoke producing device will be built and will be connected to the smoke tower, as well as to the water supply. The smoke tower will be manually controlled for temperature, smoke intensity and humidity. This smoking tower will help the fishermen to better preserve their products and will facilitate easier access to the consumer market.*

---

* Initial market will be refugees. CRS, other donors will procure dried fish as part of relief program to refugees/drought victims.

In order that the prototypes run and benefit users, a number of prior and concurrent support activities will take place; including, design, fabrication, testing and installation.

Upon recruitment, a training program within ISERST will be established for workshop personnel to develop basic skills in reading drawings and transforming such drawings into functioning equipment.

Prototype designs will then be drawn up by ISERST shop personnel indicating the sizes of all the components of each device, as well as the appearance of each item. Specifications will detail all materials and equipment used for fabrication.

In the workshop, the designs will then be transformed into prototypes by the processes of cutting, welding, bending, filing, threading, smoldering and assembling.

Laboratory tests will then be performed. For example, solar air heaters will be tested for heat transfer, air velocity, air pressure drop and air temperature rise.

The laboratory-tested prototypes are then transported to the field installation site, where installation will take place on a prefabricated or field-fabricated base.

After installation, permanent testing and monitoring will commence. For solar panels, solar radiation needs to be recorded. Panels for heating air will be checked for gravity air flow and air temperature rise. Solar water still panels will be checked for water leaks and condensation rates. For windmills the wind velocity will have been recorded as stated in Output 1. Windmill water pumps will be monitored for propeller rotations per second. The pump will be checked for pumping capacity in liters per second. Windmill electric generators will be checked for propeller rotations per minutes or seconds.

Generators will be monitored for power output. Photovoltaic water pumping requires testing for solar radiation. The power output for the panels will be measured and all controls will be checked. The pump will be measured for pumping capacity in liters per second.

In order to insure that such support activities yield the intended results, the project proposes the providing of four input components: technical assistance, 2 pick-up trucks, wind and solar workshop and laboratory and office equipment, and a small level of outside training, as well as materials for the in-house training program.

A final aspect of this project output is to identify further appropriate interventions which meet this output's objective of developing small-scale wind and solar devices which in turn meet the basic needs of the rural, labor abundant, poor communities. To this end, the project will provide a small fund of $20,000 to cover costs of additional commodity costs for experiments and prototype development.

To provide a program of pilot projects using alternative energy prototypes, the project proposes within ISERST's Earth Sciences Division construction of a wind and solar workshop, and laboratory facilities which will be added to ISERST's building plan and be constructed by AID financing in concert with the construction input described below and detailed in Annex G.

The project also proposes to equip this workshop and laboratory with AID financing. Annex F provides a detailed list, and Section IV a costing-out of the equipment proposed for the workshop.

Two pick-up trucks will also be provided for purposes of installation and maintenance of the prototype equipment.

The Mechanical/Electrical Engineer mentioned under Output #1 of this project will, with his newly assigned Djiboutian counterpart, head this workshop. Together, they will be responsible for developing an in-house training program for all workshop personnel, planning, design, fabrication and maintenance schedules, and supervising implementation of the prototype component.

Output #3: Assessment and Dissemination of Research Results

Once the prototypes have been installed and functioning, the project will provide for technological assessments of the demonstration prototypes. These assessments will then serve as the base for determining what prototypes are suitable for commercialization or wide-spread use and under what circumstances. The assessment will describe and evaluate physical properties and performance of the prototypes in terms of installation, operation and maintenance requirements from a technical, economic and social point of view. These assessments will then serve as the base for subsequent production and commercialization of the prototypes used under this project.

Assessments will be analyzed from the standpoint of the following:

- Analysis of appropriateness of technologies chosen to convert energy sources to end uses in economic, social and technical terms;
- Environmental and external factors affecting performance of prototypes;
- Social and cultural factors affecting potential adoption of prototypes;
- Economic and financial feasibility for subsequent production and commercialization.

The project manager engineer will provide the technical data collection and will be assisted by the short term energy assessment consultant for two person months.

Once the assessments have been completed, the project will assure dissemination of the results to potential private and government users, government decision makers, the general public and international research organizations. ISERST currently has no formal mechanism to disseminate research results.

As a newly established research institute, ISERST has not yet a fully developed mechanism for providing the linkages between research results and potential users and other international research organizations. Because of the size of Djibouti and ISERST, the dissemination effort must be modest but effective. Conventional approaches such as seminars and conferences organized by ISERST are envisaged. However, several possibilities such as ISERST providing short term consultancy to users interested in applying the technologies or internships at ISERST by users' employees could be considered. The outcome of the dissemination component will not only help to assure eventual wide-spread use of the projects successful prototypes, but also possibly provide ISERST with a general approach to disseminating its research results.

The project will provide a small amount of commodity support, the services of an energy assessment specialist for two person months, to examine with ISERST possible techniques for disseminating the research results under the project. The Implementation Plan, outlined in Section V, establishes that the choice of contractor will depend inter alia on the proposal's responsiveness to accomplishing the dissemination goal within the constraints of ISERST's limited facilities and Djibouti's small size.

To accomplish this assessment and dissemination output, we assume that:

- GROD and ISERST will accept an active, if quite modest, role for ISERST in disseminating results of its research;
- Some, if not all of the prototypes will have been successful and will be practical for Djibouti;
- Other GROD agencies responsible for publicity and information will cooperate and interface with ISERST's dissemination arrangements;
- That public and private users of energy will be innovative and flexible enough to adopt proven cost-effective approaches to fulfilling their energy needs.

4. Output No. 4: Energy Conservation Practices

The project proposes as an output the research, consultancy, training and professional diffusion of technical studies and on-site demonstration processes on how to save energy for space cooling, industrial and rural development processes and end uses.

Diffusion and commercialization of renewable energy technologies cannot alone lessen Djibouti's total dependence upon fossil fuel imports. Only about half of the country's present oil-based consumption is substitutable by other forms of energy - electricity and diesel currently used for heating, cooling, pumping and other shaft power energy worktasks. However, the other half of the fossil fuel consumption balance sheet - gasoline, diesel and kerosene for transport, natural gas, petrochemicals and lubricants cannot be substituted with renewable energy forms at present. However for such energy comsumption patterns there is a partial solution - adherence to energy conservation practices; i.e., making certain processes and energy worktasks more efficient and thus save on mechanical and electrical power.

In cooperation with other agencies of the GROD, ISERST and the AID contractor will select specific locations to study, install and demonstrate certain initial energy conservation techniques. While undertaking this activity ISERST will be further strengthened in its future institutional development.

In close coordination with the activities on collection and analysis of information and analytical base for renewable energy (see Output No. 1), ISERST will need to address itself to the following points in undertaking its conservation subproject:

- Percentage of the energy content of the particular energy source offered compared to actual delivery in the form of required end-use work.
- Percentage of additional required end-use work obtained if efficiencies are incrementally improved, involving even a net increase of energy.
- Techniques affecting these improvements feasible to be out into demonstration in the short (one year), medium (three year) and long term (five year).
- Fuels that can be substituted even among fossils, or can be complimentary to alter a single fuel or fuel mix.
- The extent to which such improved process changes or fuel substitutions affect new production rates and overall energy comsumption patterns.

- The financial and economic costs and benefits to the respective individual investor and to society at large, for carrying out such improved processes to produce the same good or service.

These points need to be taken up in a number of conservation targets: building design modificaiton (e.g., doubled-walled/ceiling air shafts), improved insulation materials, better ventilation (e.g., exhaust fans), and controls and usage methods in industrial processes.

Data for the above will be accomplished by a number of energy audits, short-term, on-site training sessions, installation of a few fossil-fuel-saving prototypes, and technical publications.

The end result of this effort will be a set of documents issued by ISERST on the ex-ante and ex-post processes of energy inputs, throughputs and outputs processes; a number of model sites established for demonstration of energy saving technologies with installation of a few prototypes installed; a number of formal short-term training courses for selected members of a number of industries; a set of designs, the energy staff of ISERST trained; and, a contributory chapter for the national development plan consisting of a number of final recommendations for increased efficiency of both existing processes to achieve energy worktasks and inversely a number of improved energy worktasks requiring more efficient processes. Efficiencies dealing with existing fossil fuel uses should be finally assessed by the end of Project Year 2. A number of demonstration sites with appropriate prototypes installed will be complete by the end of Project Year 3. Final recommendations including the conservation implications of renewable energy will be prepared by the end of Project Year 5.

In order to achieve this output the project will provide the long-term (4.5 PY) engineer previously mentioned; and short-term technical assistance in the form of an architectural consultant to assist in energy conservation in civil construction (=2 p.m.). A detailed description of a U.S. A and E firm will be chosen to design and draw up plans for a model energy-saving building for Djibouti. A detailed description of the duties required to accomplish this output are included in Annex E.

In addition to technical assistance, the project will provide limited commodity and operational support for carrying out needed energy audits to include ampmeters, voltmeters, tachometers, thermometers and velometers. Prototypes for demonstration can include a number of energy controls for electrical power usage and heat recovery devices for industrial waste. In addition to on-the-job training provided by the engineer and the architect, a one-month study tour should be undertaken by the ISERST chief of energy section to a number of countries having a proven track record in energy conservation.

We assume that, in order to achieve this output that:

(a) The GROD commit itself to determine in the long term a quantitative target (percentage) of desired reduction of net energy fossil fuel imports affected by conservation practices.

(b) The National Energy Commission (proposed within GROD to be formed) will be established and the Directorate of Planning provide limited recurrent budgetary support for ISERST to undertake energy audits and to set up demonstration sites.

(c) Other agencies such as the Ministries of Industries, Commerce, Agriculture and Rural Development and Public Works, provide sufficient guidance for facilitating ISERST's energy audits in the public and private sector, as well as agreement to fund trainees for ISERST short term training programs.

(d) The GROD provide ISERST with a skilled Djiboutian mechanic for at least three years to assist the project engineer and architectural consultant in taking energy audit measurements; and, who afterward will be able to assume technical responsibilities to carry on energy conservation practices.

Output No. 5: Policy and Planning Recommendation to Government

The fifth output of this project will be a final report or series of reports on the renewable energy activities of ISERST. This report will provide in addition to review of ISERST activities, policy and planning recommendations to the GROD and its National Energy Commission.

Such an analysis will assist government planners and policy makers in the following:

- Coordinate wind and solar energy matters with the geothermal activities of ISERST, as well as with fossil fuel suppliers and the electricity board.
- Determine future demands and requirements.
- Maximum present and potential uses of wind and solar energy.
- Most feasible future energy conversion investment strategies.
- Potential for more efficient use of energy (i.e., conservation).
- Possibilities for switching between wind and solar or using one as back-up system for the other for the same uses.
- Impacts on prices, employment and the environment.

A final macro economic and energy analysis is important in order to put in decision-making perspective the role of solar and wind energy sources and end-use technologies. Data collected have to be analyzed into meaningful non-technical information for requisite follow-up financial, administrative and political decisions. Subsequent government budgets will be affected on future plans for research and technology and education as well as for planning service delivery economic activities. Djibouti's future financial and economic resource base will be affected by what ISERST recommends in the way of future energy activities/investments in the wind and solar fields.

AID proposes three contributions to this effort, keeping in mind that its assistance in itself will not influence the GROD decision or policy-making process, but rather will facilitate the methodological treatment of economic and energy analyses.

Technical assistance will be provided again by an assessment specialist (for 2 p.m.), who will:

- Assist in undertaking an energy analysis fixed by physical laws: potential physical quantities of wind and solar energy regardless of market and social utility; positioning of energy inputs and outputs limited by economic potential and energy costs of production and distribution.
- Assist in undertaking an economic analysis fixed by social behavior: regulatory and incentive implications and responses of short term demand changes caused by people's preferences.

In support of preparation of the final policy recommendations, the project will fund the two high-level GROD personnel to participate in observational training tours focussing on energy planning and policy formulation in other developing countries. Countries with somewhat similar economies to that of Djibouti could be visited; e.g., Singapore, Hong Kong and Lebanon. Energy planning mechanisms could be studied in India, Philippines, Tunisia and Kenya where experience has already been gained on comprehensive national and sectoral energy assessments.

Training will also be provided on-the-job by the assessment specialist to ISERST staff on energetics and economic analysis, macro and micro.

E. SUMMARY OF PROJECT INPUTS

1. USG/AID

a. Technical Assistance ($780,000)

In order to achieve the project purpose 58.5 person months of technical assistance required.

Mechanical/Electrical Engineer: ($630,000)
This individual will serve for 4 person years as the USAID project chief-of-party subject also to the general supervision for the Director of ISERST. The counterpart will be head of the section on Earth Sciences.

Specifically the engineer will supervise buildings construction and laboratory and workshop operation. He/she will also be expected to provide thorough on-the-job training and supervision to workshop apprentices in translating drawings and specification into the final product, in fabricating and assembly operation in performing tests, maintenance and repair, in field installation and in estimating costs and proving materials. The engineer will be assisted by the assessment specialist and ISERST staff in undertaking technical energy data collecting and processing and in prototype assessments. He/she will have the equivalent experience/training of FSR-3.

Assessment Specialist: ($90,000)
In collaboration with the section on Earth Sciences and under the joint supervision of the director of ISERST and the USAID project manager, the specialist or specialists will through the short term assignments for a total of 7.5 pm undertake the following duties:

- Assist the ISERST in collection of physical wind and solar energy data.
- Act as designer and methods consultant to the socio-economic needs survey.
- Undertake base-line data and supervise subsequent demonstration period technological assessments of the prototypes.
- Assist ISERST staff in energy and economic analysis of all renewable energy data and information collected during life of project, in the form of policy and planning recommendations to government.

Architect-Engineer/Conservation Specialist: ($24,000)
Two pm of consultant services of an architect/engineer will be provided to assist the Project Chief-of-Party in examining energy conservation in civil construction in collaboration with ISERST's local building materials research program.

Other Short Term Technical Assistance: ($36,000)
The Project also provides for one person month of short-term contract backstopping in the areas of project planning or policy consultants.

b. Commodities ($862,000)
USAID will finance several categories of commodities, including solar and wind measuring instruments ($115,000) laboratory, workshop equipment, and office equipment and mechanical and electric tools (see Annex F), ($115,000), prototypes ($490,000) office supplies and publication ($62,000)

and four vehicles and spare parts ($80,000). These vehicles, two 10 passenger four-wheel drive, and two four-wheel drive pickup trucks and the required 935 waivers are being submitted. An additional $20,000 is provided for small prototypes yet to be identified and miscellaneous equipment. Household furnishings for the contractor will also be provided outside the technical contract.

C. Observation Tour and Participant Training ($35,000)
USAID proposes to finance two person months for observation tour training in other African and third world countries with successful alternative energy program for two technicians from ISERST and two GROD decision makers interested in energy planning. One ISERST technician will also be sent for participant training for a one-month seminar in third country for development of specific project-related skills as determined necessary.

d. Other Costs ($409,000)
AID, through the project, will provide accommodations, office space and supplies, insurance, and vehicle operation and maintenance support.

e. Construction ($900,000)
The project will provide construction support to ISERST's Earth Sciences Division of approximately 800 m 2 ($820,000) with $80,000 going for A and E services. This will complement GROD's proposed construction of ISERST's other divisions and administrative units of $880,000. This additional support to a permanent ISERST building will have the advantage of reinforcing GROD's commitment to developing and maintaining its own applied research capability in support of its economic development objectives. It will have the specific advantage of assuring a viable and functioning counterpart unit, the Earth Sciences Division.

The need to support ISERST's move into permanent facilities is clear-cut. ISERST is currently housed in dilapidated temporary structures. Division heads have small offices and no meeting facilities. There is absolutely no space for the multitudes of visiting specialists who are frequently providing consulting services. For example, this year there have been more than 50 such specialists visiting ISERST. In addition, there is no central library. At present, all research accumulated in Djibouti is stored in scattered offices, on shelves or on top of file drawers. A separate building serves as a temporary laboratory for research in geophysics and chemistry. In such physical conditions, scientific inquiry is difficult and causes severe limitations on ISERST's

technological effectiveness. To meet the increasing requirements imposed on ISERST not only by the GROD's interest in renewable energy but also in geothermal research, an important reinforcement of the Earth Sciences Division is critical.

Specifically this project will provide construction for approximately 800 m 2 of space: 300 m 2 of offices, conference room and library; 150 m 2 of workshop; 100 m2 of storage; and 250 m 2 of laboratory space. Annex G details the construction and implementation arrangements.

Government of Djibouti

a. Personnel ($160,000)
In addition to the services of the director who will spend up to 10% of his working time monitoring this project and parallel energy projects, and the Earth Sciences Division chief, who will spend up to 25% of his time.

The GROD will provide the services of a full-time professional project counterpart, two technicians and additional personnel such as drivers, guardians, etc. The cooperating GROD agencies will also provide small amount of support and counsel in order to maximize coordination of their agencies with ISERST and the GROD's national socio-economic objectives. GROD public works will also provide occasional advice on building regulations, codes, etc.

b. Land/Land Preparation ($400,000)
GROD will provide an appropriate site located within or near the city of Djibouti. The site proposed will have approximately 7,500 m 2 of enclosed space. GROD will clear and prepare land for construction, and provide infrastructural linkages such as storm water drainage, sanitary sewerage, potable water and electricity hook-up.

c. Construction ($425,000)
GROD will provide construction of the main building, currently estimated at approximately 1000 m 2, at a total cost, including architectural and engineering designs of $880,000. Somewhat less than half of the proposed building will support either directly or indirectly the Earth Sciences and Energy Division.

d. Commodities ($50,000)
GROD will provide commodity support to ISERST and its Earth Sciences Energy Division in the form of office supplies and equipment, laboratory equipment and vehicle.

e. Other Costs ($75,000)
GROD will provide through ISERST and cooperating agencies modest assistance in additional maintenance and repair of the prototype equipment, vehicles, etc. Further, up to $20,000 will be provided to assure building maintenance and utilities. The GROD contribution estimate does not include the estimated $200,000 of foregone customs, road tax and income tax revenues incurred by duty free import of U.S. project commodities.

F. PROJECT BENEFICIARIES

1. Primary Beneficiaries

The purpose of the project is to develop the institutional capacity of ISERST to collect and organize energy data, to test renewable energy technologies, and to develop energy policy options. Since this institutional capacity will be reflected in large degree by the people trained to perform these functions, they will be among the primary beneficiaries. They will include the management and personnel of the ISERST Earth Sciences Unit who will develop or improve skills on how to carry out statistical and other research in the energy sector, to assess the resulting data, and draw up recommendations of alternative energy policy options.

Additional primary beneficiaries in ISERST will be management and staff the new energy unit, who will learn how to identify, design, fabricate, install, maintain and evaluate demonstration applications of renewable energy technologies.

The project has identified, inter alia, six initial demonstration applications of renewable energy. These will be water pumping (using wind energy), water distillation, fish drying, fish smoking and wind generated electricity for refrigeration.

Primary beneficiaries from the wind-generated water production activities will be the approximately 11,000 people who have for the first time, close access to drinking water.

The initial water distillation intervention will provide production of drinking water on a remote research site where presently such drinking water has had to be brought by boat over a fairly large distance. Approximately 10-20 people who previously had to bring their own water will be primary project beneficiaries. The potential for this type of device should ultimately benefit many more people than this.

Primary beneficiaries of the fish drying and fish smoking projects will be the 11 fishermen presently members of the cooperatives, who will profit from an enlarged market for their catch, the 40 sellers who belong to the cooperative who will be able to provide quality products in quantity to growing dried and smoked fish markets, and the buying public who will again have access to a low cost, high protein products for their diets.

The wind-powered refrigeration project, to be established on the Red Sea coast north of the Gulf of Tadjourah, would benefit directly up to about 100 fishermen who could have access for the first time to these excellent fishing waters. The fishermen are presently impeded from using them because the are too far from Obock, presently the closest cold storage facility.

2. Second Beneficiaries

Secondary beneficiaries are more important in determining success or failure of investment in research. They will be firstly, those rural populations, who have permanent access to potable water for human consumption and personal hygiene; who exploit marginal pasture and agricultural land using financial resources freed from energy provision for other investments aimed at improving quality and yield of the land; those enterpreneurs who exploit newly accessible energy sources for local productive interventions such as fish preparation and preservation, as well as the consumers who benefit both by quality of fish supplied and reduction of costs due to increased marketing; and all electricity consumers who benefit from the minimal electricity costs permitted by a national effort to reduce energy wastage.

G. RELATIONSHIP OF PROJECT TO DJIBOUTI DEVELOPMENT STRATEGY AND CDSS

1. Djibouti Development Strategy

No development plan as such currently exists for Djibouti and thus, no comprehensive energy policy or program within a development plan exists. Indeed, one of the outputs of this project is to establish the informational base by which the GROD may proceed to elaborate an Energy Sector Plan.

The working documents prepared by the Directorate of Planning within the Presidency for the International Donors' Conference on Djibouti held from February 22 through February 27, 1981 establishes to some degree the basic development strategy for Djibouti in general, and in the energy sector in specific. The objectives outlined therein are as follows:

The Government's economic development strategy is to increasingly substitute imports by using indigenous resources. Since potential energy resources in geothermal, solar and wind-generated energy constitute one of the greatest natural resources in the country, import substitution of imported fossil fuels constitutes one of the highest priorities in the country.

Although the GROD will rely heavily on its geothermal resource, it realizes its limitations in import substitution of fossil fuels. The GROD sees solar and wind energy development as both an immediate step in its investment program and as a logical energy source for specific industrial and agricultural activities which would otherwise be precluded due to isolation from the major electricity network.

The Djibouti energy initiatives project contributes to the achievement of these objectives by providing assistance to the national research and development institute, ISERST, to develop the informational and analytical base for development of future GROD energy policies and conservation programs as well as the capability to develop a complementary program in solar and wind development.

The project also supports Djibouti's efforts to integrate rural and poorer segments of the population into the mainstream of Djibouti's economic development because there will be an energy development capacity which addresses the remote areas and the labor-absorbing smaller scale industries which would otherwise not have access to energy needed for their development objectives.

2. AID/CDSS

The Djibouti FY 82 CDSS cites the lack of precise information on Djibouti's potential natural and human resource base as the single most hindrance to the development, either within Djibouti or AID, of a long-term Djibouti development strategy. Thus, it provides as its first priority a short-term strategy to, inter alia, analyze the natural and human resource potential in order to assist the GROD in articulating a long-term development policy (p. 34). Also a fundamental constraint to long-term development of Djibouti is human resources development and emphasis is placed on the need for training and education to be immediately relevant to specific Djiboutian programs (p. 39). Finally, the CDSS makes a strong case for assistance to Djibouti to coordinate international donor efforts and to address the international donors' community unconscious (or conscious) tendency to avoid coming to grips with institutionalization within project activities (pp. 27-29). The FY 82 CDSS lists alternative energy initiatives as one of the GROD development priorities open to AID. The CDSS further stresses that an agressive energy strategy will become increasingly essential in Djibouti (p. 45).

The project proposed will develop the institutional capacity within the GROD to collect basic data for the energy sector, to direct testing of energy production, consumption and conservation. Thus, the project fulfills the CDSS outline that providing basic information on natural resources and training a local capability to continue to do so be the foremost objective of any intervention. The project will train Djiboutians to develop a capacity to establish and follow a framework on international donor coordination in the field of energy development and conservation. These objectives will be achieved by means of a project directed at one of the greatest immediate needs of Djibouti's economic development: reduction of its dependency on external fossil fuels.

H. RELATIONSHIP OF PROJECT TO USG/GROD PROJECTS AND OTHER DONOR PROJECTS

1. USG/GROD Projects

AID bilateral and other projects related to the Energy Initiatives Project include:

(1) Participant to Renewable Energy Program. From July 14 through August 13, 1980, USICA sponsored one participant from the Djibouti Electric Company to a seminar organized by the International Institute of Education on renewable and alternative energy for experts from Francophone Africa.

(2) AID Fisheries Development Project. The objectives of the AID Fisheries Project is to increase the number of fishermen in the country, increase the total catch by 100 percent and thereby increase the real income of the fishermen. Processing and distribution of the fish for market require drying. At present, the project is drying sardines in the sun. The project will examine solar drying units as a means of correcting disadvantages posed by the currently used methods.*

(3) AID Soils and Water Resources Analysis. The AID Soils Project will enhance the GROD capacity to provide recommendations on land and water use vis-a-vis diversification. The Energy Initiatives Project complements the Soils project in that once viable soil and water resources are identified, an indigenous capacity to provide more cost-effective ways of providing needed energy will be the thrust of a follow-on project.

---

* Marketing thrust is through establishing viable cold-chain; however, to reach additional remote/poorer groups such as refugees and nomads, dried fish is seen as the only alternative.

(4) CRS Integrated Rural Development Project (IRT). Catholic Relief Services are currently examining the possibilities of developing an OPG which will address the need to develop the agriculture sector by constructing dams and water sources in an effort to promote indigenous garden agriculture.

2. Other Donor Activities in the Energy Related Field

a. Conventional Energy

(1) Expansion of fossil fuel burning electrical generating capacity: for Djibouti city, Saudi Arabia will provide 4 million to expand the city of Djibouti's current electricity generating capacity by 12 MWH or 33% by 1982.

(2) Expansion of Electricity Distribution System: The European Investment Bank will provide 1.8 million to the Djibouti Electric Company (EDD) to expand the city's electricity supply system and link it to a partial underground grid to replace vulnerable segments of currently overhead lines.

(3) Technical Assistance to Electricite de Djibouti (EDD), the state electric company. The French Government through its Cooperation Assistance Fund (FAC) provides - technical experts in administration and engineering to the EDD.

b. Geothermal

(1) Testing geothermal sites: In 1970 prior to Djibouti's independence the French Government undertook the drilling of two experimental boreholes near Lake Assal, in the center of the country. Assal II, as it was referred to, was dry, produced no vapor, and was useless for experimentation. The project was abandoned by the French in 1975. In 1979, the UNDP took up the project again in collaboration with the new Djibouti Government for approximately $1.5 million under a contract to the Franch Company (Bureau de Geologie at Recherches Minieres) (BGRM).

(2) Geothermal Studies. The French Government, again under contract with BRGM, is undertaking a study of the geophysical zone around Lake Assal to determine degree of salt-intrusion in the area. The study is expected to be completed and the report finalized by December 1981.

(3) Geothermal Studies. The Italian Government is also currently financing a two pronged technical feasibility study in geothermal energy. The first study calls for a geothermal inventory of all the hot springs in the country in an effort to identify the best possible sites for in-depth studies.

The second study will then be a detailed survey of the Hanle Plain in the center of the country. The results of these studies, expected by July 1981, will enable the GROD to determine, from a technical perspective the most favorable geothermal spot.

(4) Technico-Economic Studies. Once the most favorable geothermal spots have been determined from the technical point of view, economic studies evaluating the sites from the point of view of energy uses will be undertaken in mid-1981. The Italian Government will provide one short term expert to undertake these studies. The French Government has also expressed an interest in assisting in this economic study.

(5) Technical Assistance to ISERST. The French Government through its Cooperation Assistance Funds (FAC) currently provides one advisor to the Director of ISERST, the Research Organization, and three scientists, two to the Earth Sciences Division and one to the Life Sciences Division.

(6) Training. The government of France is currently supporting 10 Djiboutian geologists in long term training.

c. Renewable Energy

(1) Technical Assistance and Commodity Support to Solar Energy Utilization for Agriculture. The French Government is currently supplying the project manager for one-half a hectare pilot agriculture project to produce salt-resistant crops via intensive drip irrigation in Attar. Photovoltaic pumping provided by the EEC's European Development Fund, will be used to transport and distribute water from the reservoir to the crops.

(2) Technical Assistance to the Rural Engineering Department in Alternative Energy Applications. The French Government is providing one project backstop position within the Rural Engineering Department (Genie Rural). Part of the responsibilities of this position will be to backstop the Attar project and other alternative energy projects which will be eventually used by Genie Rural.

(3) Windmill/Wind generating equipment: The Federal Republic of Germany will conduct a feasibility study to determine whether it will provide up to 50 windmills to pump water for agricultural pilot activities.

(4) Solar Cookers: UNICEF is currently investigating the possibility of providing $50,000 worth of solar cooking units for use in the refugee centers, and possible intervention in windmills for agriculture production.

(5) Solar Cookers: Emergency Relief Foundation (USA) is al' exploring possibilities of introducing solar cookers in) refugee centers.

The description of the above assistance demonstrates the lack of integration of commodities with trained Djiboutian personnel.

I. Conditions Precedent to Disbursement and Special Covenents

In addition to standard conditions precedent to disbursement of funds, USAID is proposing two additional CP's in order to assure proper Project implementation:

(1) GROD will identify and have procurred the site of the GROD-financed and AID-financed ISERST building;

(2) GROD will have identified by name and given evidence of funds available for hiring (or secunding from another GROD agency), a qualified Djiboutian counterpart to the AID-financed contract engineer who will be acceptable to AID and available for the life of the project.

III. PROJECT SPECIFIC ANALYSES

A. ECONOMIC ANALYSIS SUMMARY

There are two major thrusts to this project. The first is institution building with ISERST to create an ability within the organization to define energy policy and to coordinate and apply alternative energy technologies. This policy and coordination effort will be achieved through applied research and it should feed into the overall economic planning ability of the government and improve the linkages between research and economics development. The training components of the institution building effort will allow ISERST and the GROD to make use of the "appropriate technologies" which are being delivered by other donors without the accompanying technical back-stopping which would make these technologies useful to Djibouti. Thus, while other donors are active in the alternative energy deliveries to Djibouti, such assistance has often amounted to little more than a commodity drop. The USAID institution building effort will permit the GROD to maximize these other inputs as well as develop future energy policies.

The second thrust of the project will establish a unit within ISERST which will evaluate and adapt alternative energy technologies to the Djiboutian environment. This will be achieved through demonstration of pilot projects in which technologies will be imported and set up at appropriate sites. Again the major purpose of this thrust will be institution building and education. What is important for an economic analysis at this stage is to show that technologies exist today which can have economic application to Djibouti. Without the assurance that technologies exist which will be economically viable for Djibouti, there would be no justification for institution building purpose of this project.

Studies in Djibouti have identified the following uses for solar and wind energy:

1) Solar dehydration of fish

2) Solar smokers for fish processing

3) Solar stills for the desalination of brackish or saline waters

4) Solar cookers

5) Solar food warmers

6) Small solar refrigeration units

7) Photovoltaic cells for pumping water and small electric needs

8) Wind energy for pumping water

9) Small wind electric generator to provide electricity to isolated rural areas.

An in-depth analysis showing economic applications of solar drying, solar still, windmills and photovoltaic cells is included in Annex B. These analyses show that there are economic applications for renewable solar and wind technologies in Djibouti. These analyses justify proceeding with this institution building/pilot demonstration project

B. TECHNICAL ANALYSIS SUMMARY

The project analysis team in its technical analysis has found the Energy Initiatives Project to be technically sound and appropriate to Djibouti's objectives and constraints.

Discussion of the various technologies and conservation methods to serve as project interventions is based on a five step process.

The government has asked USAID to undertake a project to include renewable energy and energy conservation. Of the options for renewable energy, geothermal was discarded for the present. The expense for a comprehensive research and development program would exceed budgetary limitations for this project. In addition, other donors are quite active already in preparing resource inventories and drilling test-bores. The biomass and hydro options were discarded because of lack of appropriate resources in the country. Solar and wind energy options were thus chosen for interventions. Similarly, in regard to energy conservation, the priority is to find ways to lessen the amount of imported fossil fuels.

The next step therefore was to look at socio-economic needs in the country that could be addressed without the requirement for an initial household survey. Since the country lacked sufficient surface water for irrigated agriculture this need was considered but rejected because of the present high state of capital-intensivity and limited soil resources. On the same hand, cooking was rejected as a solar energy option because of the poorly developed state-of-the-art at this time, as well as cultural and social problems in consumer acceptance. (eg. most of the population including refugees uses government subsidized kerosene) Two important needs were then found

appropriate for project intervention: drinking water (pumping and distillation) and preserving fish (freezing, drying and smoking), along with energy conservation practices.

The Rural Engineering Service of the Government is already involved in a well drilling program for provision of drinking water. However, they have become overly dependent upon diesel for operation of the water pumps. Due to the nature of their remote locations for well drilling it is not always possible to connect their water pumps with electricity. Similarly there are remote locations with available surface water that is saline, but where no water wells are contemplated. A means has to be found to provide potable surface water without the need for pumping. This provides one of the potential uses for solar stills.

Food preservation was another easily-identified need particularly in regard to preservation of fish. The Fish Cooperative is severely hampered in extension of its fish catchment areas without provision of chilling points to store the fish before pick up. Another form to preserve fish without refrigeration is fish drying which will allow the Fish Cooperative to extend a great deal of its marketing thrusts. An added feature would be fish smoking (along with drying) that could develop new consumer preference market. All these needs could be met with renewable energy devices developed and installed by ISERST.

Nevertheless dependency upon fossil fuels will have to continue in a large vein, at least for about 50% for uses for which renewable energy cannot substitute (fuel for transport, lubricants, etc.). In this sector it is important to consider how existing processes using fossil fuels can be made more efficient, hence, energy conservation. Similarly for those worktasks for which one can develop entirely new processes even substituting for fossil fuels, another form of energy conservation can be practiced. ISERST could take the lead in meeting this need.

For renewable energy in wind and solar, six specific energy producing technologies were chosen for prototype assembly/fabrication, testing and installation.

The solar still can convert hot saline water into steam through evaporation and then into drinking water through condensation with direct solar radiation. It will cost between $400 to $600 per installation to produce up to nine liters per seven to eight hour day with an estimated life of 20 years. The windmill water pump can direct mechanical shaft power for pumping and will cost about $60,000 and will yield up to 80 cubic meters of sub-surface

water per day. The photovoltaic water pump can provide direct current electricity with motor for mechanical shaft power for pumping up to the same amount of water per day, and costing about $80,000 to install. Wind energy can be used to provide an electrical wind generator and refrigeration unit with controls and standby system. This electricity power will energize compressor and fans for freezing. It will cost $85,000 to install and will yield 2,500 watts of cooled air per hour. Solar panels with controls can be installed for fish drying through provision of hot air. This device will cost $600 and will yield up to $0.8m^3$/sec of hot air per hour. Finally, the fish smoking device as a wood burning fireplace combines smoke with the solar-heated hot air to provide a new taste for fish. This device will cost $150 to produce high intensity and volume of smoke using a maximum of only a few kilograms of wood per day.

There are four specific strategies that will be undertaken in maximizing fossil fuel saving energy conservation practices:

> First, improving conservation planning by instituting energy audits with collection of base-line data in buildings and industrial processes. Second, is the reduction of solar radiation inside buildings by studies on improvement of building design, less heat-absorbing materials and improved ventilation. Third, studies will be made on improving control and usage methods in industrial processes. Last is the long term on-going program of ISERST in research and development of fuel alternatives for new energy.

C. SOCIAL ANALYSIS

1. Social-Cultural Context

Djibouti's demography is characterized by three predominant elements: (1) population distribution which is up to 75% urban, making Djibouti a virtual "city-state", (2) presence of 30,000 displaced persons, either drought victims or political refugees living in centers outside the capital city and whose future political and economic status is highly uncertain; and (3) a smaller rural population which is primarily subsistance nomadic.

The Republic of Djibouti is three years old. All areas of political, economic and social life reflect this fact. Even basic statistics on demography such as population size, distribution both across age groups, regions and income groups are collection and

analysis of such data currently non-existant; is subject to political sensitivity. Further, few statistics on the natural or economic resource base exist. The country currently has no social economic development plan. These features make identification of target groups and analysis of the social impact of any project or program difficult.

The Djibouti Energy Initiatives project has been designed keeping in mind both the currently scarce social, economic and technical data base and the fragile socio-economic and environmental context of Djibouti. The project thrust includes the collection of socio-economic and technical data basic to promotion of energy research and development in Djibouti, while reinforcing an institutional capacity within GROD to continue to collect such information. This will be accomplished by execution of socio-economic and technical studies on energy needs and wind and solar potential; use of prototypes and pilot interventions developed from the studies which will be monitored for technical performance and socio-economic and impact and replicability; and then, assessment of wide-spread adaption of successful energy substituting and conserving techniques.

2. Beneficiaries

Although secondary or indirect beneficiaries are the more important indicator of success of a research and development project, the proposed project does have a number of primary beneficiaries resulting from the pilot interventions. They are:

- approximately 11,000 people who will for the first time have access to drinking water provided by the wind-generated water pumps.
- approximately 20 persons living or working in remote areas who will have on-site drinking water by means of the project's water distillation devices;
- approximately 11 fishermen and 40 sellers who will directly benefit from installation of fish drying and fish-smoking facilities as well as an unidentified but significant number of the consuming public;
- approximately 100 fishermen, who will for the first time have access to the excellent fishing waters of the Red Sea coast north of Djibouti City.

The indirect beneficiaries will be determined by the outcome of the socio-economic and technical studies and the performance monitoring of the prototypes. They will be: 1) remote rural populations who will have close permanent access to potable water for human consumption and personal hygiene; 2) those enterpreneurs who exploit newly accessible energy sources for local productive

interventions such as fish preparation and preservation; 3) the consuming public who benefit both by improvement in quality provided and by reduction in costs and energy; and 4) all electricity consumers who benefit from a national effort to reduce energy wastage.

The project analysis team has identified no groups likely to be adversely affected by this project. Women will benefit as providers and consumers of water, as prime users of energy for home consumption, and as persons gaining employment created by improved availability of energy.

3. Participation and Socio-Cultural Feasibility.

Although the need for substitution of fossil fuels is pressing, little is known about the social and technical context in which this goal is to be achieved. The project thus addresses this lack of information through the use of prototypes and pilot interventions. The purpose of this approach is to identify, prior to widespread introduction of equipment in Djibouti, the suitability of the devices given the administrative, organizational, technical and economic and cultural context of the beneficiary population. Thus, the project has proposed that once the phototypes have been in place for a year, a formal assessment will be undertaken to ascertain likelihood of success in widespread use. This assessment, like the initial energy needs assessment, will be carried out in conjunction with ISERST's Social Sciences Division. Indeed, one of the project's spin-offs is expected to be the gradual integration of the social sciences unit into technical feasability studies in preparation for investment decisions. This approach is currently neither used in Djibouti nor understood, which explains both the limited resources and absorptive capacity of the Social Sciences Division and the need to proceed with a modest sociological input at this time.

4. Impact

As a research and development project, impact, particularly on indirect beneficiaries, depends on the results of the project and cannot be determined a priori. By incorporating the assessment component, the project has been designed to optimize the possibility of spread effects and replicability.

5. Issues

Djibouti's officials are poignantly aware of many of their current and potential social problems, particularly those related to widespread unemployment, rural-urban migration and ethnic differences. The decision-making process, however, has little experience in formally incorporating most of these concerns into decisions concerning project and program investments.

Thus, the issue remains whether the GROD will incorporate the findings of the socio-economic studies into decisions concerning investment in the energy sector.

D. ADMINISTRATIVE FEASIBILITY ANALYSIS

1. Government of Djibouti

The GROD implementing agency for this project will be the National Higher Institute of Scientific and Technological Research (ISERST).

ISERST, established in 1978, has been mandated by the government to direct and coordinate all scientific and technical research in Djibouti. Although its original thrust was "pure research," the importance of Djibouti's geothermal energy potential and the corresponding need for geothermal related research and development activities, have had considerable impact on steering the institute towards an applied research orientation. Thus, perhaps more than some other similar organizations, ISERST's research and studies are oriented toward practical application in support of the social and economic goals of the country.

Furthermore, ISERST's position within the President's Office, alongside the National Directorate of Planning, assures an important role for the Institute in influencing and rationalizing national social and economic planning. This relationship between a well-developed research and studies entity and national economic planning is critical to Djibouti in light of its marginal resource base and fragile ecology. Historically, ISERST has also had a close relationship with the Ministry of National Education and thus influences scientific and technical training in the country.

The Institute is divided into four divisions (services), each under the direction of a division chief: Earth Sciences and Energy; Humanities and Social Sciences; Life Sciences; and Technology.

ISERST: ORGANISATIONAL Chart

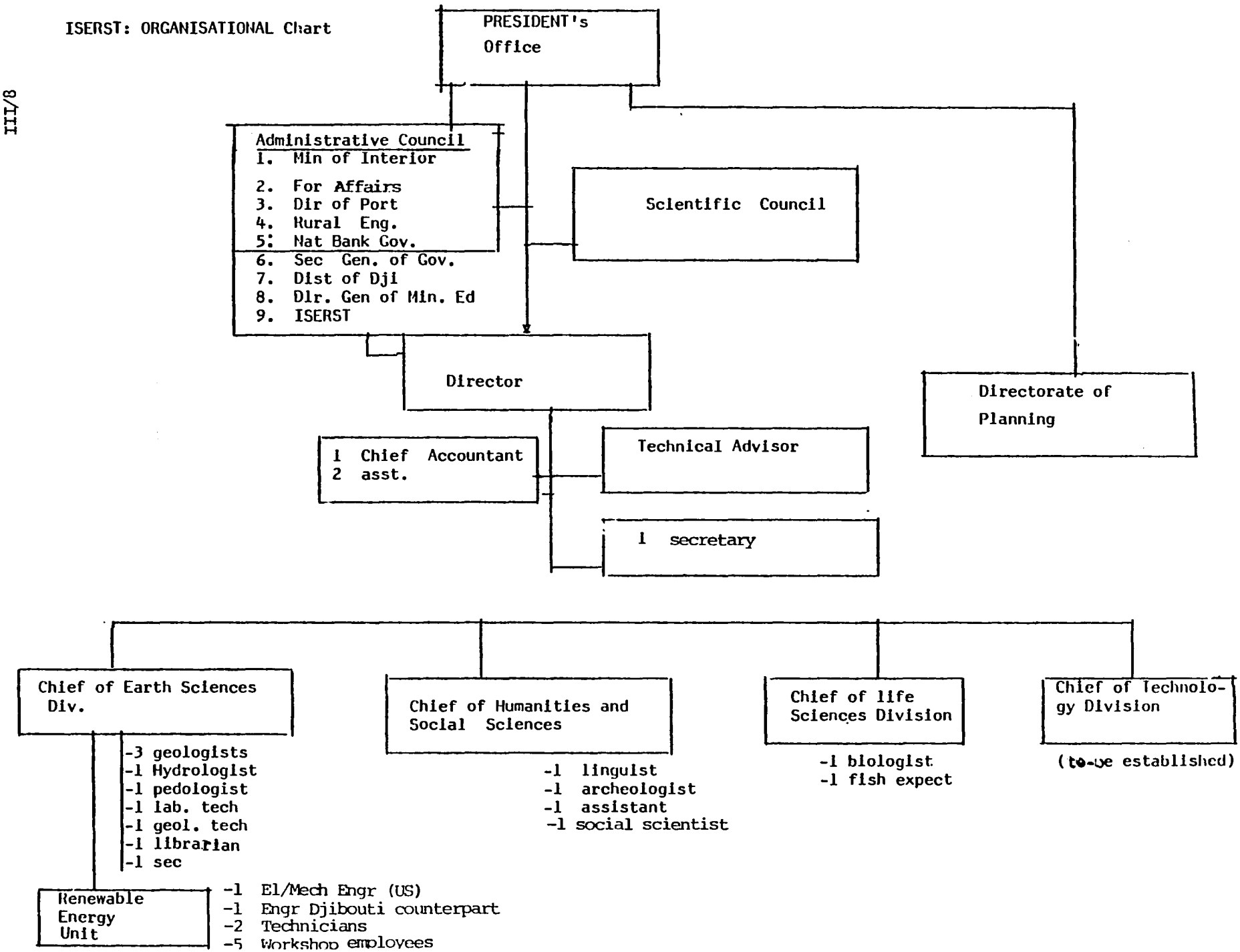

The Earth Sciences Division overseas exploration, cataloging and research of the country's natural resources. The division's current activities include exploration and research of national minerals, hydrology, soils, geothermal and under this project wind and solar resources. Geothermal research currently constitutes by far the division's and ISERST's largest activity. The division has also envisaged conducting research on development of local building materials. There are currently ten professionals assigned to the Earth Sciences Division, of which two are expatriate.

The smaller Life Sciences Division aims at understanding and exploiting modern technology in the promotion of health, housing and general environment. This division has currently three professionals of which the fish expert is expatriate.

The Humanities and Social Sciences Division is comprised of five professionals. The division is mandated toward research aimed at assisting national integration and preservation of the various cultural heritages within Djibouti. Its current thrust is primarily archaeology and linguistics. However, it will be responsible for carrying out, with AID assistance, the energy assessment.

The institute is administered by two committees. Scientific and technical programs and policies are to be determined and reviewed by a Scientific Council. Though this council has not yet been established, it is anticipated that its membership will include scientists of international repute from within and outside Djibouti. All administrative questions and policies including budget, are directed by an Administrative Council. The Administrative Council is composed of nine Djiboutian members of various ministries of the governemnt.

ISERST's scope of operation is limited, both in terms of budget and in terms of personnel. Manpower is already inadequate to carry out the array of assignments GROD envisages for ISERST. Further, ISERST has had little experience in implementing projects of any size. The one possible exception is the geothermal research activities. However, there is little evidence that assistance in this area has aimed at strengthening ISERST's ability to carry out similar projects in the future. And finally, financial and logistic support for the lower level workship personnel required for projects such as this one poses a problem for ISERST, not only from a budgetary point of view, but from a hiring "ceiling" perspective.

ISERST's limitations reflect the realities of the Djiboutian Republic rather than the government's commitment to research and

development or to the energy project. More indicative of GROD's commitment to ISERST is the high percentage of qualified, though somewhat inexperienced, national staff. GROD has proposed to breach the professional manpower gap by secunding to ISERST a qualified Djiboutian counterpart from another agency. The additional two to three permanent counterparts will have to be recruited once the project is underway.

The project proposes by means of technical assistance to assigned counterparts and the testing, project implementation, monitoring and evaluation elements, to reduce the inexperience of ISERST personnel in further undertaking projects such as these.

The limitation imposed on workshop manpower still pose a potential problem. The project proposes to fund these personnel during life-of-project with the rationale that they are specifically project-related and not part of the ongoing ISERST operation. There is no doubt that, in light of the skills these trainees will have developed and the economy's needs--both already existing and those created by the project--these trainees will be absorbed by the private and public sector. It is envisaged that ISERST will maintain those needed to support further renewable energy research after project termination, with the remainder being absorbed by those public and private enterprises adopting the renewable energy technologies.

Since GROD has limited contracting experience and capability, the project is proposing a direct AID contract.

Similarly, GROD has virtually no capability in US procurement procedures. Thus, project commodity procurement will be incorporated into the project's contract.

Ministry of Agriculture

The Ministry is composed of three departments (services) - These are the Rural Engineering Service (Genie Rural); Agriculture and Forest Service, and the Fish and Livestock Service. The Demonstration interventions planned under the project will be carried out in collaboration with the Rural Engineering Office and the Fish and Livestock Service.

Rural Engineering Office (Genie Rural)

Genie Rural is responsible for drilling wells and establishing water points; it will be the coordinating agency with ISERST for the

windmill pumping intervention. Since its creation, after independence in 1977, it has established 17 such water points each of which serves 1000 to 1500 people. The water points are equipped with diesel powered pumps, reservoirs for holding water, taps for users and watering troughs for animals. A Djiboutian mechanic is on permanent duty at each of them to operate and maintain the equipment. The wells vary in depth from 40 to about 150 meters. Finances for the program have been provided, up to now, by the GROD budget and donor assistance from Saudi Arabia.

Genie Rural has two French and one German drilling rig - two are capable of drilling to 500 meters; these were gifts from FAC and Saudi Arabia. A fourth rig is capable of drilling to 1000 meters and was recently given by Libya. The drilling program has recently been placed in the hands of a U.S. expatriate funded by UNICEF.

Genie Rural is headed by a Djiboutian geologist who is very enthusiastic about collaborating with this project. He is assisted by 3 French, 3 German and 2 American advisors and technicians. There are 200 Djiboutians employed by this service.

Two major studies are being carried out for the service. One of these is American AID financed and constitutes a country-wide soils survey. The other is West German funded and is a country-wide survey of water resources including both surface and ground water. Findings from these survery/studies will provide the basis (if any) for GROD, other donor investment in pursuit of agricultural diversification schemes.

Regarding wind and photovoltaic water pumping demonstrations planned for this project, Genie Rural would be tasked to drill the wells and put in place the associated infrastructure at its expense for the pumps and other commodities supplied under the project.

Fish and Livestock Service

The fish drying, smoking and refrigeration demonstrations planned would be carried out in collaboration with the Marine Fisheries Cooperative Association. The cooperative is under the aegis of the Fish Service whose director is also the director of the cooperative. It was officially organized in June 1980. It has 200 members, all men, of which 115 are private fishermen and the others are fish sellers.

The cooperative is the main beneficiary of a USAID project with the Fish Service, which started early in 1980. This project

provides the services of a full time fisheries advisor, the part-time services of a master fisherman. and a number of commodities including a 30 ft. fishing boat, 16 outboard motors, nets, hooks and other fishing gear.

Since the beginning of March the cooperative entered into the business of retail and wholesale trading of fish and appears to be doing quite well. Its members bring in fresh fish daily. These are sold on a cash basis to retail customers and there are sub-contracts with the Army to supply large amounts on a wholesale basis. The present turnover rate is about 700 kilograms a day and this figure is increasing rapidly.

The Catholic Relief Services has a program in Djibouti for feeding some of the many refugees in the country. They recently approached the cooperative with an offer to help them try drying sardines/sharks as a part of the program for feeding refugees. This experiment, based on drying in ambient air, has proceeded rather well. Under the present project solar dryers will be added to the installation to improve and speed up the precess, as well as to enlarge it to include fish smoking.

Administrative Issue: The Energy Initiatives project requires an important amount of coordination among the various GROD ministries charged with supplying the services indicated as objectives for energy substitution and ISERST. For example, the Rural Engineering Office will be drilling the water points for two of the pilot interventions and Fisheries Service will be setting up the fish drying and smoking mechanisms.

During project design discussions among the various GROD ministries involved in the project, the problem of interministerial coordination was brought up on several occasions. It presents a risk to successful project implementation. During these meetings a defacto interministerial committee has been formed for purposes of arriving at final components of the project. At the request of ISERST and under the Directorate of Planning, this same forum can be convened when important coordination questions occur. The project has also stressed that the ancillary GROD agencies involved in this project are to incur minimal responsibilities toward the alternative energy projects until that time when they become proven practical.

The project also stresses that the selection of sites and prototoype sizes must be made in strict collaboration with the agencies involved. In practice this will mean that the choice of sites and prototypes will be made within the contest of the work plans already decided on by those agencies involved and by the Directorate of Planning.

2. U.S. Government/AID

We propose that competitive procurement be used to select a competent private U.S. engineering firm with both architectural and engineering experience in designing energy conserving buildings and energy development and research. The RFTP will stress that a major basis for awarding the contract will be the way the offeror proposes to make optimal use of limited Djibouti personnel and resources in achieving the project outputs and purposes.

The USAID/Djibouti Mission, which will consist of two USD and two FNDH, also has limitations in exercising its monitoring and management role in project implementation. The project specifies that REDSO/EA will provide technical backstopping particularly the architectural and engineering and legal affairs. The project also places considerable importance in the administrative and managerial skills of the contract chief-of-party. In recognition of this additional managerial requirement to an individual with already strong technical skills and experience, the project is proposing that the salary scale be based at an FSR-3 level.

Finally, requirements for issuance of the PIO/T and subsequent RFTP surpass the limitations of personnel and time available to USAID/Djibouti and REDSO/EA. Thus, responsibility for final PIO/T and RFTP issuance will be with an already burdened AID/W. To help alleviate that burden, the draft PIO/T and RFTP will be drawn up by the project team and USAID with assistance from REDSO/EA. The Draft documents will then be forwarded to AID/W for finalization.

The project analysis team has examined the availability of all commodities to be supplied under the project, including windmills. The windmills envisaged by the project have only been supplied by U.S. firms to other countries in Africa.

E. ENVIRONMENTAL CONCERNS

The Djibouti Energy Initiatives Project will have a minimal impact on the environment. The project endeavors to identify ways to substitute more economical and practical energy sources for other development activities already in existence. An Initial Environmental Examination is included as Annex C.

IV. FINANCIAL PLAN

A. Project Cost Summary

The total cost of this project to AID is $5,350,000 of which $3,100,000 in foreign or local currencies will be financed by USAID and the GROD.

TABLE I

Project Cost Summary (000)

Description	USAID	GROD	TOTAL
Construction	900	425	1,325
Land procurement/ preparation		400	400
Commodities	862	50	912
Technical Assistance/ Personnel	780	160	940
Other Costs	409	75	484
Training	35		35
Evaluation	35	5	40
Contingency and Inflation	979	235	1,214
TOTAL	4,000	1,350	5,350

B. AID

1. Architectural and Engineering Support ($80,000): AID will contract for architectural and engineering services, to prepare necessary drawings and documents emphasizing energy for conservation in construction.

2. Building Construction ($820,000)

a. The building will consist of offices, laboratories, storage. toilets and workshop for Earth Sciences Division of ISERST.

b. Directorate and common areas, consisting of offices, conference room, library, garage/shops, toilets and storage room. The building will be designed and built to optimize energy efficiency and serve as a demonstration for such. In general the buildings will have a steel or reinforced concrete frame with concrete block walls, offices and laboratories. In addition to concrete blocks, walls will have face bricks for optimal insulation. The offices and rooms with sensitive equipment will be air conditioned.

3. Technical Assistance ($780,000)

USAID will provide technical assistance: 45 person months for an engineer and 7.5 person months for the energy assessment specialist, 2 person months for a conservation specialist; and 1 person month miscellaneous. Cost estimates for technical assistance include international and in-country travel, benefits, allowances, salaries and logistical support and per diem for short term specialist. All such services will be procured by competitive bidding from U.S. companies.

a. A Mechnanical/Electrical Engineer ($630,000):

See Annex E for job description and technical qualifications. Experience is required in fabrication of solar devices and assembling windmills, estimating, managing, collecting and processing solar and wind data, energy conservation and installation of prototypes. This person must have extensive experience in building construction in order to assume supervisory responsibilities.

b. The Energy Assessment Specialist ($90,000):

(For Technical qualification reference see Annex E) This specialist shall have field experience in developing countries in micro and macro economic analysis and in social science research methodologies. He will be expected to design and supervise socio-economic energy needs survey. The social science aspects of the particular prototype assessments and render micro energy planning and policy formulation.

c. Additional Short Term Consultant Services ($60,000):

Funding is provided for 6 person months of short term consultants in the following areas: architectural and engineering backstopping for building construction; initial implementation planning for windmill water pumping, windmill electric generator to provide power for refrigeration equipment for cold fish storage, photovoltaic water pumping, distillation still system, flat solar air heaters for fish drying and smoking; wind and solar measuring equipment site selection and installation; and conservation consultant (2 pm of an architect) for energy audit.

4. Commodities and Supplies ($862,000)

a. General ($272,000)

USAID will provide the following to support its technical assistance services: books, periodicals,curricular materials on renewable energy especially regarding windmill, solar panels and photovoltaic systems. Purchase of five vehicles. Materials for construction of prototypes. Miscellaneous monitoring and testing equipment for the laboratory.

Equipment for measuring and processing data on wind and solar energy. Five vehicles: three four-wheel drive pickup trucks, and two ten passenger four-wheel drive carry-all vehicle.

Office and laboratory equipment and stationary, workshop equipment and tools, and training materials for the on-the-job training component.

b. Prototype Commodities ($590,000)

USAID will provide funding for six prototypes installation. USAID will provide equipment, materials and manpower to make complete installation of solar air heaters for fish drying and smoking, water-still system, windmill generator, and electric generator with internal combustion engine for back-up windmill generator, windmill pump as well as photovoltaic array and pump, all those systems will be supplied from U.S. suppliers. The windmill generator with refrigeration unit and back-up systems, will be installed for fish cold storage for the fish cooperative, as well as solar air heaters for drying and smoking fish. The fish cooperative will build the cold storage, drying and smoking towers.

5. Observation Tour Training and Participant Training ($35,000)

The project provides for financial support for two person months of observation tour training in third countries, primarily to observe research in renewable energy and current work in construction and application of solar and wind-powered devices. Also provided is one person month seminar of technical training in a country for the Djiboutian counterpart.

6. Other Support ($409,000)

The AID financed contracts will provide temporary office with all necessary furnishings, communications system and secretarial services, for the engineer supervisor during the building construction, and other technical assistance. AID will also provide financial support for operating expenses for testing, instrumentation and fabrication of prototypes for project promotion and insurance, and extra expenses for the apprentice training program including stipends during their apprenticeship.

7. Monitoring and Evaluation ($35,000)

AID will provide total three person months for an economist, an engineer for an end-of-project evaluation. The team will report on the impact of the project in achieving project purpose, and recommendation to the ISERST as to the policies on renewable energy usage and conservation of energy.

8. Contingency and Inflation ($979,000)

Contingency is calculated at ten percent sub-totaled project costs. Inflation is calculated against that same sub-total at 15 percent per annum compounded annually.

B. GOVERNMENT OF DJIBOUTI

1. Personnel ($160,000). In addition to the services of the director who will spend up to 20% of his work time monitoring this project and parallel energy projects, and the Earth Sciences Division chief, who will spend up to 50% of his time, the GROD will provide the services of a full-time professional project counterpart, two

technicians and additional personnel such as drivers, guardians, etc. The cooperating GROD agencies will also provide small amount of support and counsel in order to maximize coordination of their agencies with ISERST and the GROD's national socio-economic objectives. GROD public works will also provide occassional advice on building regulations, codes, etc.

2. Land/Land Preparation ($400,000). GROD will provide an appropriate site located within or near the city of Djibouti The site proposed will have approximately 7,500 m2 of enclosed space. GROD will clear and prepare land for construction, and provide infrastructural linkages such as storm water drainage, sanitary sewerage, potable water and electricity hook-up.

3. Construction ($425,000). GROD will provide construction of the main building, currently estimated at approximately 1000 m2, at a total cost including architectural and engineering designs of $880,000. Somewhat less than half of the proposed building will support either directly or indirectly the Earth Sciences and Energy Division.

4. Commodities ($50,000). GROD will provide commodity support to the Earth Sciences Energy Division in the form of office supplies and equipment, laboratory equipment and vehicles.

5. Other Costs ($75,000). GROD will provide through ISERST and cooperating agencies assistance in additional maintenance and repair of the prototype equipment, vehicles, etc.

6. Inflation/Contingency. Contingency for project costs was calculated at ten percent of sub-total project costs. Inflation was calculated at 15 percent per annum compounded annually.

TABLE II

PROJECTION OF AID EXPENDITURES BY FISCAL YEAR

FY	82	83	84	85	86	TOTAL
TECHNICAL ASSISTANCE						
Lg. Term: Mech/El Engr (4.5 py)	70	140	140	140	140	630
Sh. Term: Conserv (2pm)				24		24
Sh. Term: Assessment Spec. (7.5pm)	42		24		24	90
Sh. Term: Misc. Baskst. (3pm)	12	12			12	36
TOTAL TECHNICAL ASSISTANCE (58.5pm)	124	152	164	164	176	780
COMMODITIES						
Project Vehicles	40	20	20			80
Lab Equipment	35					35
Workshop Equipment	45					45
Office Equipment	35					35
Wind/Solar Measuring Equipment	115					115
Prototype Equipment						
Windmill Pump			.00			300
Wind Generator & Ancil			80			80
Photovoltaic			85			85
Distillation/Fishdrying	5					5
Unidentified Prototypes			20			20
OFFICE SUPPLIES	14	6	16	8	8	52
PUBLICATIONS	3	3	2	1	1	10
TOTAL COMMODITIES	292	29	523	9	9	862
CONSTRUCTION						
Drawings/Designs	80					80
Construction	820					820
TOTAL CONSTRUCTION	900					900
TRAINING						
Short Term Training		10				10
Observational Tours	10				15	25
TOTAL TRAINING	10	10			15	35
OTHER COSTS						
O and M for Vehicles	5	5	5	5	5	25
Temp Personnel (local)			30	30	30	90
Project Diffusion/Promotion	1	3	3	3	3	13
Communication/Extension Research/Prototype O&M Research	3	16	29	29	29	106
DBA	2	2	2	2	2	10
Office Rental	20	20				40
Contractor Housing (AID)	25	25	25	25	25	125
TOTAL OTHER COSTS	56	71	94	94	94	409
EVALUATION			15		20	35
SUBTOTAL	1382	262	796	267	314	3021
Contingency (10%)	138	26	80	27	32	303
Inflation (15% p.a. compounded)	0	39	257	139	241	676
	1520	327	1133	433	587	4000

TABLE III

COST PROJECTIONS BY PROJECT COMPONENT

($000)

PROJECT INPUTS	PROJECT OUTPUTS					
	DATA BASE	PROTOTYPES/ PILOT PROJECTS	ASSESSMENT	DISSEMINATION OF RESEARCH RESULTS	CONSERVATION	REPORT & RECOMMENDATIONS TO GOVERNMENT
AID						
Energy Assessment Specialist	45		25		20	90
Elect/Mech Engineer	55	485	20	70		630
Conservation Specialist				20	4	24
Short term support	5	16	10	5		36
TOTAL TECHNICAL ASSISTANCE	105	501	·55	95	24	780
COMMODITIES						
Vehicles	30	50				80
Lab equipment		35				35
Workshop equipment		45				45
Office equipment	10	10	5	5	5	35
Office supplies	12	10	10	10	10	52
Publications	7	1		2		10
Wind/Solar Measuring	115					115
Prototype equipment		490				490
TOTAL COMMODITIES	174	641	15	17	15	862
CONSTRUCTION						
A&E	10	10	30	20	10	80
Construction	110	330	180	120	80	820
TOTAL CONSTRUCTION	120	340	210	140	90	900
TRAINING						
Short term prof trng		10	5			15
Observ tour training					20	20
TOTAL TRAINING		10	5		20	35
OTHER COSTS	15	220	90	68	16	409
PROJECT EVALUATION			20		15	35
SUB TOTAL AID	414	1712	395	320	180	3021
INFLATION & CONTINGENCY	134	555	128	104	58	979
TOTAL AID PARTICIPATION	548	2267	523	424	238	4000
GROD						
Land procurement/clearing	75	50	200	50	25	400
Construction	85	60	205	50	25	425
Commodities	10	10	10	15	5	50
Personnel	20	80	20	20	20	161
Other Costs	20	30	10	10	10	75
Inflation & Contingency	31	134	31	23	16	239
TOTAL GROD PARTICIPATION	241	364	476	168	101	1350

TABLE IV

PROJECTION OF GROD EXPENDITURES BY GROD FISCAL YEAR
($000)

FY	82	83	84	85	86	TOTAL
PERSONNEL						
Director (10%)	2	1	1	1	1	6
Division Chief (20%)	3	2	2	2	3	12
Energy Counterpart	8	11	11	11	11	52
Technician			7	7	7	21
Support Personnel	14	14	14	14	14	70
TOTAL PERSONNEL	27	28	35	35	36	161
COMMODITIES						
Office Furnishings/Conf	20					20
Office Spplies	2	2	2	2	2	10
Ancillary Equipment for measurements/ Prototypes (other GROD agencies)	2	2	2	1		8
Energy Lab Equipment	2	2				4
Publications	1	1	2	2	2	8
TOTAL COMMODITIES	28	7	6	5	4	50
CONSTRUCTION						
A&E	25					25
Construction (40%) entire GROD constr. effort	200	200				400
Land prep/clearance	400					400
TOTAL CONSTRUCTION	625	200				825
OTHER COSTS						
Vehicle O&M	2	2	2	2	2	10
Maintenance for Prototypes	2	2	2	2	2	10
Building Maintenance/Utilities	10	10	10	10	10	50
Communications Support	1	1	1	1	1	5
TOTAL OTHER COSTS	15	15	15	15	15	75
SUB TOTAL	695	250	56	55	55	1111
Contingency	70	26	6	6	6	114
Inflation		38	16	27	38	125
TOTAL GROD CONTRIBUTION	765	315	78	88	99	1350

TABLE V

SUMMARY COST ESTIMATE AND FINANCIAL PLAN

($000)

	AID		GROD		TOTAL
	FX	LC	FX	LC	
Technical Assistance	780	-	-	161	941
Commodities	685	177	-	50	912
Construction	80	820	-	825	1725
Participant Training	-	35	-	-	35
Other Costs	-	409	-	75	484
Evaluation	35	-	-	-	35
Contingency	159	144	-	114	417
Inflation	353	323	-	125	801
TOTAL	2092	1908	-	1350	5350

TABLE VI

GROD INCREASE IN ANNUAL RECURRING COSTS

(US. $)

PERSONNEL	ISERST	Other GROD	Total
Director's Time	(1,222)[1]	-	-
Chief of Earth Science Division	(2,319)[1]	-	-
Renewable Energy Counterpart	(10,370)[1]	-	-
Lab Technician	6,822	-	6,822
Lab Technician	6,822	-	6,822
Workshop Techs (5)	-	30,700[2]	30,700
Driver	7,000	-	7,000
TOTAL PERSONNEL	20,644		51,344
BUILDING MAINTENANCE			
Maintenance, Protection, utilities	8,000	-	8,000
VEHICLE MAINTENANCE & REPLACEMENT	11,000	-	11,000
Lab equipment/Other Costs	6,000	-	6,000
Publications	3,000	-	3,000
TOTAL	48,644	30,700	79,344

Annual recurring costs to ISERST will have increased by $48,644 by end of project. This sum represents an increase of approximately 8.5 percent. The total recurring costs to GROD are estimated at $79,344, which represents 5.9 per cent of total GROD project costs.

1. (Non-additve)
2. The workshop labor will be dispersed throughout GROD and private firms at end-of-project.
3. Includes depreciation which is not a cash expense, but must be budgeted to provide for replacement of vehicles.

V. IMPLEMENTATION PLAN

A. Contractor: TA/A and E

We are proposing that competitive procurement be used to select a competent private U.S. (Code 000) engineering firm with strong compentencies in both energy research and development and in architectural and engineering design and planning of energy-conserving buildings.

Upon signature of the Project Agreement, AID/W will issue a PIO/T and RFTP for both the technical assistance component and the architecture and engineering services component. Firms will be free to combine in joint ventures to submit proposals.

The RFTP will stress that evaluation and selection of proposals will place great importance in: (1) the contract-firm's qualifications for and past experience in implementing similar energy and institution-building projects; (2) the contractor's past experience in providing A and E services for energy conserving buildings; (3) innovative and insightful approaches by the proposal to accomplishing the project outputs and purpose given the particular constraints and limitations found in Djibouti; and (4) the quality of the personnel proposed, specifically, the long-term chief-of-party.

Selection of the TA/A and E contractor will be made in AID/W. One member of GROD will participate in Contractor selection. Once the contract has been signed by SER/CM, we are proposing that the Contracting officer, SER/CM delegate to the AAO/USAID/Djibouti authority to administer the contract from Djibouti, with REDSO/EA assistance. This redelegation will include authority to amend the contract.

The contractor (A and E segment) will be responsible for establishing a working relationship with a local (Code 941) A and E firm and in a coordinated fashion develop plans for construction of the ISERST building.

In carrying out its A and E preparations for construction of the ISERST building, the contractor will examine avenues open to AID on implementation of the construction component. The contractor will then make recommendations on the optimal methods of executing the projects construction phase. Specifically, the contractor will advise on whether a direct AID contract, a subcontract through a US A and E firm, or a Host Country contract would be most in the interest of good project management.

B. Contractor: Construction

For construction services, USAID and REDSO have determined that the value is too low to attract firms other than local firms. Accordingly, GROD is requesting that publication in the Commerce Business Daily be waived. The principal construction firms active in Djibouti are AID Geographic Code 935 ownership, although there are a few Djiboutian firms. In order to assure competition, the project is recommending that a waiver be sought for Code 935 (Europe plus Djibouti) for construction services.

C. AID

USAID/Djibouti

USAID/Djibouti's role will be that of monitor and evaluator. USAID will approve annual work plans. USAID will also have responsibility, with the help of REDSO/EA, for contract administration. This includes authority to amend the contract. USAID will issue the commodity procurement documents which will be prepared by the contract chief-of-party.

REDSO/EA

REDSO/EA will have, in addition to their normal backstopping for Djibouti, responsibility for contracting the construction services. REDSO/EA will also provide architectural and engineering backstopping during the construction phase. Specifically. this will require at least three visits to Djibouti. The first will be for approval of the final A&E drawings for the building; the second for approval of construction contractor; and the third for final inspection of the completed building.

Regional legal affairs backstopping will be provided for Project Agreement, approval of bid documents and approval of the selected construction sub-contractor.

The REDSO/EA Social Analyst will provide support as needed to the needs assessment and other social aspects of the project.

AID/W

AID/W will issue the PIO/T and RFTP and be responsible for selection and negotiation of the direct AID contractor.

C. GOVERNMENT OF DJIBOUTI

The National Institute of Studies and Research (ISERST) has been named by GROD as its implementing agency. ISERST directs and coordinates all scientific and technical research in Djibouti. Within ISERST, the project will be situated within the Division of Earth Sciences and Energy, whose Division Chief will take direct responsibility for the project.

GROD will, as a condition precedent to disbursement of funds, provide one qualified counterpart to the AID contractor electrical/ mechanical engineer. Both will report directly to the Earth Sciences Division Chief.

GROD will also provide, after project start-up, other agreed upon personnel in a timely fashion. GROD will be responsible for vehicle and building maintenance, and participate in contractor selection and commodity procurement.

GROD Ministry of Foreign Affairs will assure appropriate duty-free clearance through customs of all project commodities as well as assure liaison between AID and ISERST.

The Directorate of Planning, within the Office of the President, will assure all necessary inter-ministerial coordination required by the project.

D. PROCUREMENT PLAN

USAID and REDSO/EA have determined that GROD does not have sufficient capability to carry out commodity procurement from US sources effectively. Thus, the project is recommending that a Procurement Services Agent such as Milford International be contracted with as Authorized Agent for GROD.

With the exception of vehicles and office equipment, which need local maintenance, all project commodities will be of U.S. source and origin (Code 000). Waivers to permit local procurement of office furniture ($20,000) and project vehicles ($80,000) from Geographic Code 935 are being submitted with this project.

Waivers are also being submitted to procure construction services and materials for a total value of approximately $820,000 from Geographic Code 935.

All PIO/C's will emphasize the need for particular attention

to packing requirements for measuring and laboratory equipment for export in light of its vulnerability to damage. All electrical equipment will specify 220 V and 50 cycles.

Catalogues have been checked to assure availability in the US of the commodities. A highly detailed equipment list containing specifications is included as Annex F.

Project Implementation

(Summary Narrative for accompanying chart)

1. Pro Ag Signed

2. Contract Awarded

3. L-T Contract Technician Mobilized - ISERST Assigns Counterpart Engineer to serve as Chief of Renewable Energy Section

4. Prelim. Designs Complete for Construction

5. Final Bid Documents Complete/IFB Published

6. Energy Needs Assessment Complete (done by Contract S-T Economist and ISERST Social Science Section)

7. Solar Proto-type equipment

8. Observational training tour completed for counterpart engineer

9. Wind/Solar measuring equip arrives (Wind Proto-types Lab, Office equip ordered) ISERST assigns data collection; Wind/Solar measuring equipment installed/measuring begins

10. Construction Sub-Contract awarded, construction begins

11. Solar proto-types installed (testing begins) with assistance of Fisheries Service

12. S-T specialized training completed in Rwanda

13. Data Base Established: Technical wind/solar measuring studies completed

14. Office, lab, workshop equip and wind proto-type arrive

15. Conservation policies recommended

16. ISERST Earth Science Section finished (additional staff assigned)

17. Proto-type sites selected, assembly, installation, testing begins (in cooperation with Rural Eng. Service and Districts)

18. Assembly, maintenance OJT begins re proto-types

19. All proto-types installed

20. Workshop has initiated analysis of various local materials for use in construction

21. Proto-type assessments completed: Includes tech and economic analysis of impact.

22. Models for appropriate energy conserving construction designs completed

23. Additional proto-types fabricated

24. Renewable energy development plan finalized for submission to GROD for review: Includes accommodations concerning fossil fuel conservation, appropriate building designs, appropriate local materials to be used in construction, economic efficiency, of proto-types tested, new suggested technologies for ROD, policy for into diffussion and commericialization of proven technologies

25. Familiarization training program completed: Included 1.5 month program for public and private sector personnel who will receive training in assembly, maintenance, of solar/wind equipment and appreciation for benefits of these technologies.

EOPS

I. Commercialization of proven proto-type technologies so as to efficiently exploit water and land for principally domestic uses, secondarily for potential food and small industries as evidenced by:
   a. Local Entrepreneurs importing technologies
   b. Other Donor use
   c. GROD use: District, Genie Rural

II. Long-term Renewable Energy Econ Development Plan based upon
   a. data base
   b. technology assessments
   c. conservation procedures to include bldg designs, use of local materials

III. Additional Proto-type technologies fabricated/installed, tested and results disseminated

IV. Functioning Energy Section within ISERST to achieve complement

above on continuing basis as evidenced by:

- Personnel assigned (6 full time)
- Lab to test technologies, materials
- Workshop to fabricate and maintain new proto-types developed
- Analysis/data collection to continue, disseminate info, and provide planning guidance
- Operating procedures for each section established, adequate budget provided, as well as turn-over policy wherein other GROD entities assume responsibility for assuming proto-type operations following ISERST testing/assessment.

DETAILED PROJECT IMPLEMENTATION SCHEDULE

(see accompanying chart)

81	ACTION	AGENT
A. June 15	PP Approved	AID/W (AFR/DR)
B. Jul 1	Allotment Provided	AID/W (AFR/DP)
1. Jul 15	Grant Agreement signed (Draft Attached Annex_____) a. English draft into French 6/15 b. GROD review 6/30	
2. Jul 25	CP: Determines site for ISERST	GROD
3. Jul 25	CP: commits itself to counterpart identifies by name and assures budget timeliness of assignment	
4. Aug 1	H.H. Furnishings ordered via P.O.	USAID-AID/W (SER/COM)
5. Aug 15	RFTP for TA (Based upon PIO/T-attached Annex_____)	AID/W (AFR/DR&SER/CM)
6. Oct 15	Testing equipment and solar prototypes ordered (PSA Milford Int'l) see Annex F for equipment to be procured via PIO/C	USAID
7. Nov 15	Contractor selected	AID/W (AFR/DR,SER/CM)
8. Nov 15	Amendment to grant signed	USAID -GROD
9. Dec 15	Contract signed	AID/W (SER/CM/FR/ROD)
10. Dec 15	Identify contractor's house, temp. office vehicles (PIO/C prepared for two vehicles	USAID

82		
11. Feb 1	ISERST counterpart assigned	GROD
12. Feb 1	Contractor's House rented	USAID
13. Feb 1	H.H. Furnishings arrive/installed	USAID
14. Feb 1	Temporary office rented	USAID
15. Feb 1	Contract begins - contractor mobilized	Contractor
16. Feb 10	Contractor arrives Proj Mgr (Mech/Elec Engineer)	
17. Feb 15	Vehicles procured (2)	USAID
18. Feb 15	Local secretary hired	Contractor
19. Feb 15	Furnishings for temporary office procured/ installed (typewriters, calculator, furniture locally via P.O.)	USAID-Contractor

82	ACTION	AGENT
20. Mar 1	Assess ISERST Earth Sec. Requirements and enter into contract for local architect to do preliminary designs (see recommended layout Annex____)	Contractor, GROD
21. Apr 20	Preliminary designs completed REDSO/EA reviews, approved	Contractor, GROD REDSO/EA
22. Apr 30	Preliminary designs forwarded for GROD review	Contractor, USAID, GROD
23. May 15	Local A&E selected/begins final ISERST bldg designs/preparation bid documents	Contractor, GROD
24. Jun 1	ISERST recruits enumerators for energy needs baseline study	GROD
25. Jun 1	Economist arrives for energy needs assessment (2.5 mos); ISERST assigns (includes contractor)	Contractor, GROD
26. Jun 15	Testing & solar prototype equipment arrives (stored at Embassy warehouse)	P.S.C. Milford
27. Jun 15	Observational (tour) training begins for counterpart	GROD USAID, Contractor
28. Jul 1	Prepare drawings for solar prototype installation (coordinate with fishers service)	Contractor, GROD
29. Jul 15	ISERST counterpart engineer returns	
30. Jul 20	Begin installation solar equipment prototypes (Fisheries service designates two of its people for OJT in maintenance) a. distillators 8/1 b. solar driers 8/15 c. solar smokers 8/30	Contractor, GROD
31. Aug 1	Prequalifying for bldg construction	Contractor
32. Aug 15	Socio-econ data base complete; analyst departs	
33. Aug 30	Final drawings & bid documents completed. Civil Engineer, REDSO/EA engineer and lawyer arrive to review documents, approve (1 wk)	Contractor, REDSO
34 Sep 15	GROD reviews, approves designs, bldg permit obtained	GROD
35 Sep 15	Identify wind/solar testing (measuring) sites (procure additional all terrain vehicle PIO/C)	Contractor, GROD USAID
36 Sep 30	IFB for construction published (local only--period 60 days)	Contractor
37 Oct 1	ISERST assigns data collection technician plus driver	GROD

82	ACTION	AGENT
38. Oct 15	Wind testing equipment installation (Oct, Nov) testing begins (Nov-Dec)	Contractor, GROD
39. Nov 1	Office, lab workshop equipment ordered PIO/C)	Contractor, USAID
40. Nov 30	Prototype equipment ordered (PIO/C)	USAID, Contractor
41. Dec 1	Bids opened/reviewed REDSO/engineer (1 wk)	Contractor, REDSO
42. Dec 15	Sub-contract awarded for construction	Contractor

83		
43. Jan 31	Construction begins	Contractor
44. Feb	Energy conservation methods assessed (continues for one year)	Contractor, GROD
45. Jun	Training - S-T third country (francophone) one month	Contractor, GROD
46. Sep	Office, labor, workshop equipment arrives/ inventoried	Contractor, USAID
47. Oct	Supplemental furnishings, office equipment procured locally by contractor for ISERST's energy section	Contractor, USAID
48. Oct	First in-home PES performed (18 mo. from contract mobilization)	USAID
49. Nov	ISERST Earth Sciences Section completed. Civil eng., REDSO/Eng arrive to review final construction	Contractor, REDSO, GROD
50. Nov	ISERST assigns additional staff: lab technician, (2) workshop engineer	GROD, Contractor
51. Nov	OUTPUT #1: TECH STUDIES: (solar-wind measuring completed) report containing results/recommendations re prototype site selection	
52. Nov	Prototypes arrive/inventoried	Contractor
53. Nov	Move from temporary office to ISERST (relinquish office rental)	Contractor, GROD
54. Dec	Office, lab, workshop equip installed	Contractor, GROD
55. Dec	Vehicles (replacements procured-2) by PIO/C	USAID, Contractor
56. Dec	OJT of lab tech and mechanics in assembly/ maintenance (mock trial erection/repair)	Contractor, GROD

83	ACTION	AGENT
55. Dec	Vehicles (replacements procured - 2) by PIO/C	USAID, Contractor
56. Dec	OJT of lab tech and mechanics in assembly/maintenance (mock trial erection/ repair)	Contractor, GROD
84		
57. Jan	Energy engineer consultant arrives (2 mos) to assist in final site selection, prototype testing procedures, installation of initial prototypes	Contractor
58. Jan	Prototype sites selected	Contractor, GROD USAID
59. Feb	Assembly/installation (8) prototypes (average two/mo x 4) testing begins immediately following installation	Contractor, GROD
60. Feb	OJT starts in workshop re assembly/fabrication/ mtce (5 technicians secunded for 4 mos) 1 from each district = 4 1 from Genie Rural 1 to be determined	Contractor, GROD
61. Jun	OUTPUT #2: ALL PROTOTYPES installed testing, maintenance on-going	Contractor, GROD
62. Jun	Contract report, to specifically include recommendations on info dissemination	Contractor
63. Jul	Home Leave	Contractor
64. Sep	Begin lab analysis of conservation through local materials utilization in construction and improved bldg designs	Contractor
85		
65. Jan	Technological assessment of prototypes begin. Information dissemination concurrent with results forth-coming from each prototype assessment	" Contractor, GROD
66. Jun	R & R	
67. Jul	Additional Prototypes completed	GROD, Contractor
68. Jul	Engineer arrives to assist in global assessment all prototypes, develop recommendations for subsequent commercial end-use evaluate potential for additional prototypes, ISERST capability to locally fabricate/ maintain	Contractor

85	ACTION	AGENT
70. Jul	Assessment of potential for utilization of local materials in construction as well as improved energy conserving designs	Contractor
71. Aug	Synthesis of above into recommendations for future renewable energy, policy in third plan including fossil fuel conservation, renewable energy technology substitution	Contractor
72. Aug	OUTPUTS #3 & 4: PROTOTYPE ASSESSMENTS completes; appropriate building design materials identified	
73. Sep	Project Manager develops turnover procedures	Contractor, GROD
74. Oct	All lab, workshop operations continue with minimal overview of project manager	
75. Oct	Final training workshop held (2 mos) in renewable energy technology: fabrication, assembly, etc. (private & public sector)	Contractor, GROD
76. Nov	Additional prototypes installed tested	GROD
77. Nov	Transfer of prototype maintenance to appropriate private, public sector entity	Contractor, GROD
78. Dec	OUTPUT #5: FINALIZATION OF renewable energy plan	

86		
79. Jan	Project Manager provides advisory, monitoring support	Contractor
80. Mar	GROD reviews renewable energy plan	GROD
81. May	Evaluation: Final special end-of-project	USAID
82. Jun	Project Manager departs	USAID, Contractor

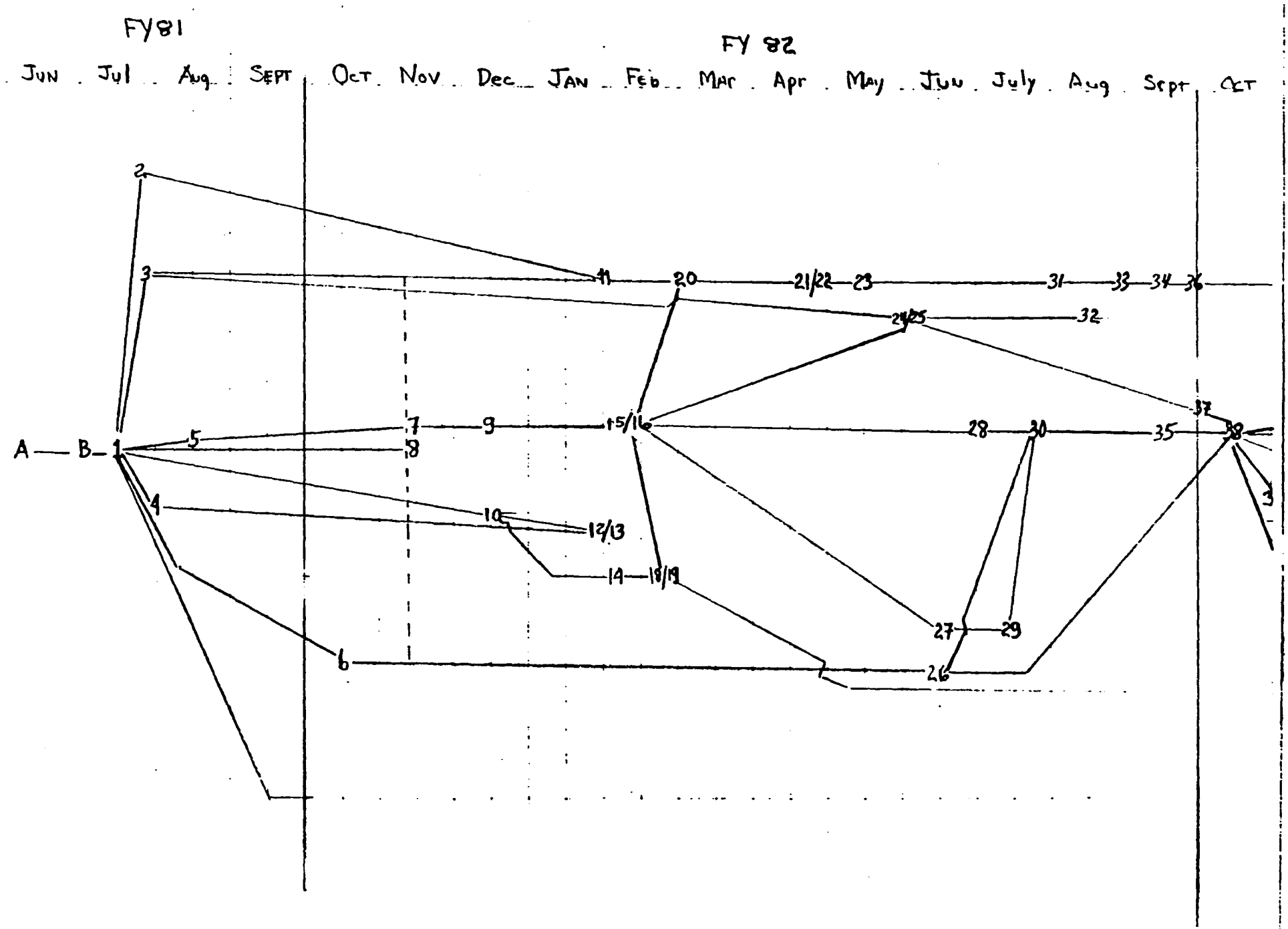
FY81
FY 82
JUN
Jul
Aug
SEPT
OCT
NOV
Dec
JAN
FEB
MAR
Apr
MAY
JUN
July
Aug
Sept
OCT
A
B
1
2
3
4
5
6
7
8
9
10
11
12/13
14
15/16
18/19
20
21/22
23
24/25
26
27
28
29
30
31
32
33
34
35
36
37
38

Implementation Schedule (Detailed)

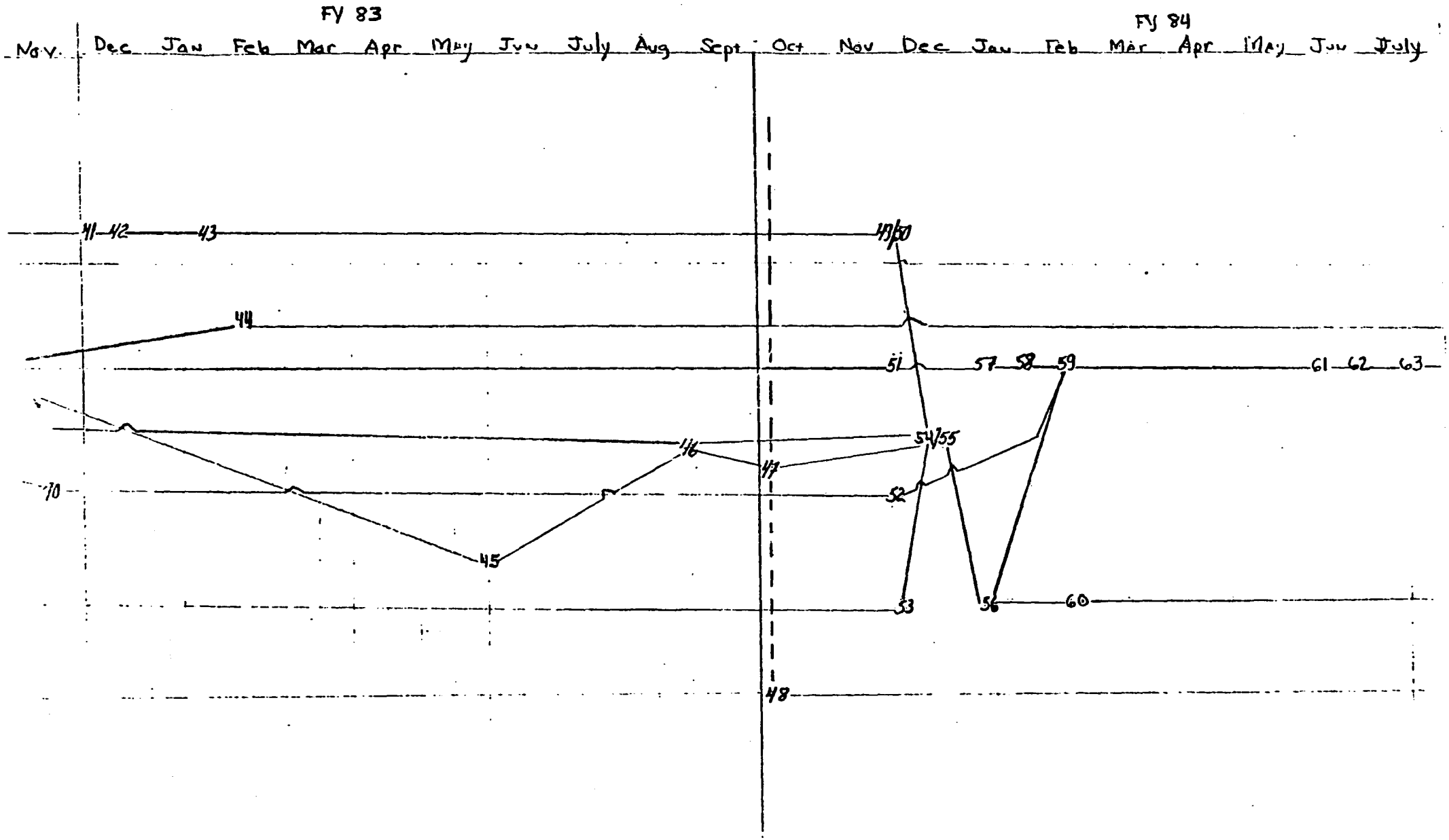

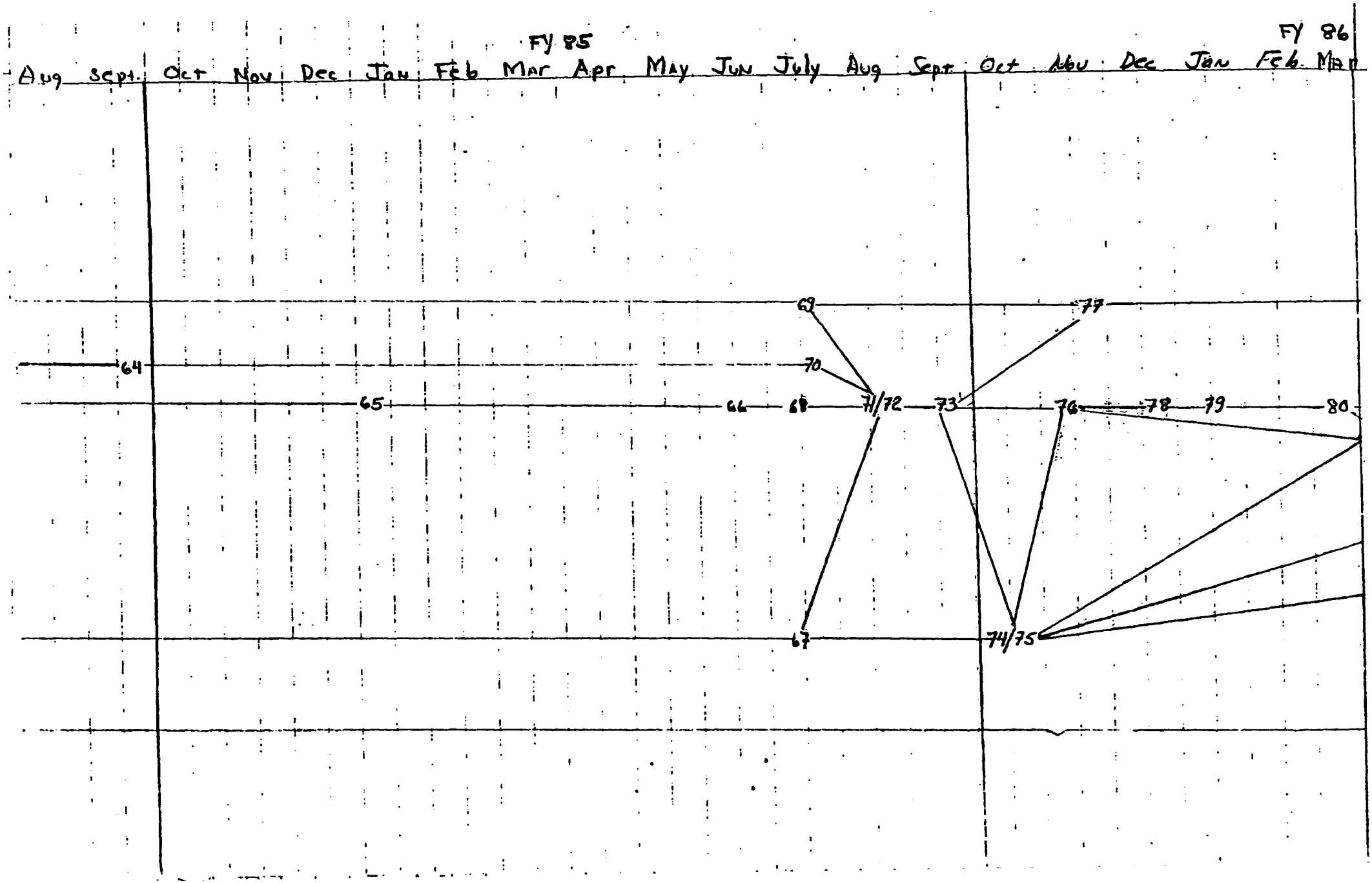
FY 85
FY 86
Aug
Sept.
Oct
Nov
Dec
Jan
Feb
Mar
Apr
May
Jun
July
Aug
Sept
Oct
Nov
Dec
Jan
Feb
Mar
64
65
66
68
69
70
71/72
73
74/75
76
77
78
79
80
67

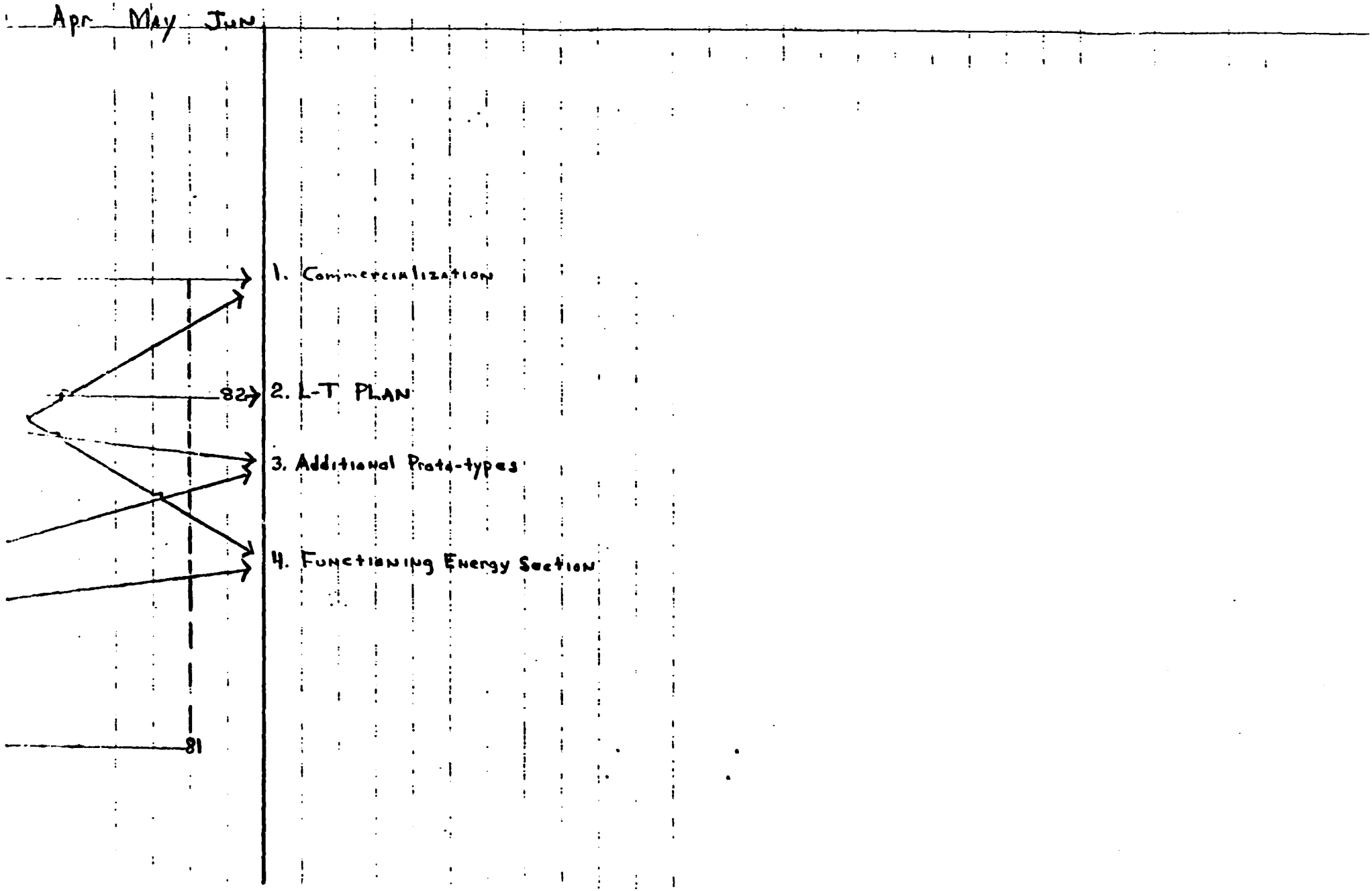
Apr
May
Jun
1. Commercialization
82
2. L-T PLAN
3. Additional Proto-types
4. Functioning Energy Section
81

PROJECT IMPLEMENTATION (SUMMARY)

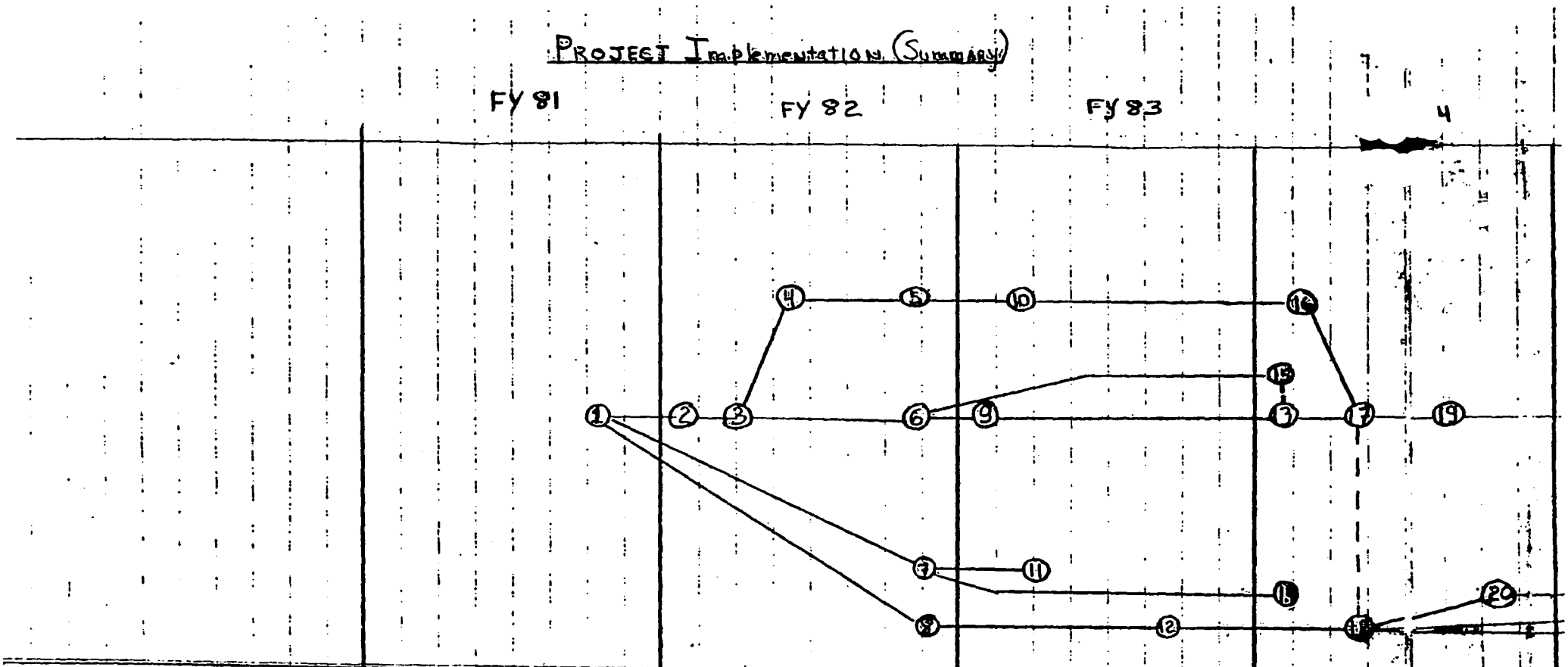

OBLIGATION	Expenditures by FY			
A. Tech Assistance		110,000	120,000	130,000
B. Commodities		290,000	290,000	643,000
C. Training		10,000	10,000	
D. Construction		900,000		
E. Other Cost		56,000	71,000	94,000
F. Evaluation				
G Contingency/Inflation		138,000	590,000	368,000
TOTAL		1,506,000	2,890,000	1,235,000

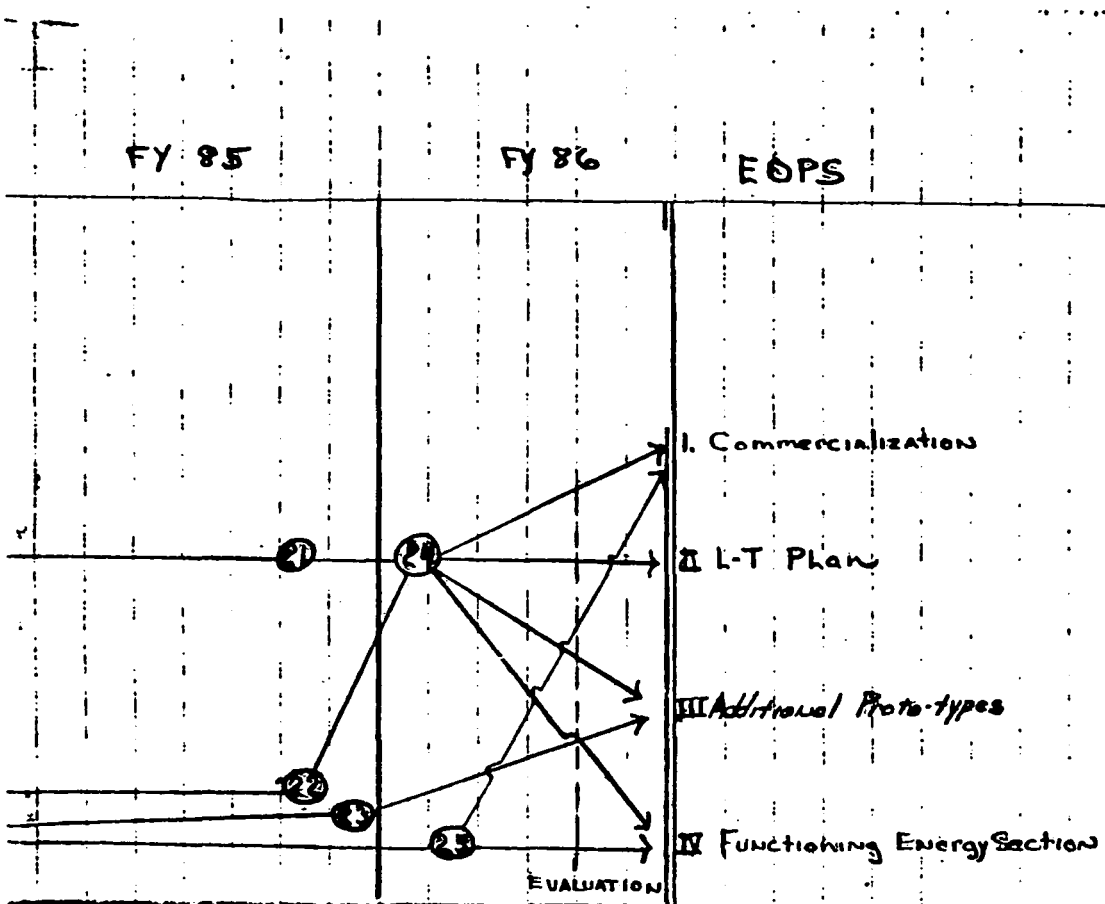

130000	140000	630000
9000	9000	982000
	15000	35000
		900000
94000	94000	409000
	35000	35000
145000	249000	959000
78000	542000	3950000

VI Evaluation Plan

A. Annual Evaluations

The first routine evaluation, PES I and II, will be undertaken in July 1982. The evaluation summary will be based in the contractor's quarterly and annual reports, other contractor, USAID and GROD documentation and a site visit. The purpose of the evaluation will be to determine how well the project is keeping its schedule. It will also identify current and potential implementation problems and suggest solutions. PES I and II are then scheduled every 15-18 months. AID contract personnel, GROD officials, USAID and REDSO/EA will participate in these evaluations.

B. In-depth Evaluation

In addition to the routine evaluations, the project proposes two in-depth project evaluations. The first evaluation will take place in November, 1983, upon completion of the needs assessment and technical data collection. Evaluation will focus on the quality, quantity and appropriateness of the data collected, as well as its interpretation. The evaluation should also include proposals for modifying the nature of the prototype interventions. The evaluation will also analyze the effectiveness of the project in contributing to the sector goal and sub-goal.

The final in-depth evaluation, to take place in June, 1986, would analyze the quality of the prototype program, its sucess in achieving the project purpose and contributing to the project goal and sub-goal. It would also address applicability and replicability of the project approach: (a) to other sectors of research and development within ISERST; and (b) to other countries with similar constraints and resources. The major thrust of the final in-depth evaluation, however, will be to make detailed recommendations for further assistance in the energy field, either in an expanded solar, wind or conservation program or in geothermal.

USAID, REDSO/EA, GROD and the contractor will participate in these in-depth evaluations. Further, the project has budgeted for two outside consultants, an engineer and an economist, to particpate in the first in-depth evaluation for three weeks in PY 3 and four weeks at end of project.

The evaluation team will be expected to visit sites of prototypes as well as sites for future projects proposed by GROD officials.

ANNEX A

Technical Analysis

Matching needs with technologies

Initial discussions with Government planners, cooperating sponsor authorities (ISERST), experts in executing agencies and with USAID Djibouti eventually yielded six separate prototypes for development and demonstration. The chart attached summarizes the process through a series of steps for final selection of prototypes.

Technology selection process

Step 1 ENERGY OPTIONS	Step 2 NEEDS	Step 3 EXECUTING AGENCY THROUGH ISERST	Step 4 ENERGY PRODUCING TECHNOLOGY	Step 5 IDENTIFYING ENERGY CONSERVATION PRACTICES
geothermal	(not considered)	(not considered)	(not considered)	
biomass & hydro	" "	" "	" "	
solar & wind	Provision of drinking water	Rural Engineering Service	Windmill water pump, photovoltaic water pump	
		Fishing Cooperative	solar still	
	fish refrigeration	Fishing Cooperative	electrical wind generator and refrigeration equipment with controls	
	fish drying (and smoking)	Fishing Cooperative	solar panels with controls	
	provision of irrigation water	(not considered)	(not considered)	
	cooking	" "	" "	
fossil	conservation	ISERST		energy audits buildings, industrial processes R&D: substitute more efficient conversation and end use technologies

REPUBLIC OF DJIBOUTI
POPULATION DISTRIBUTION

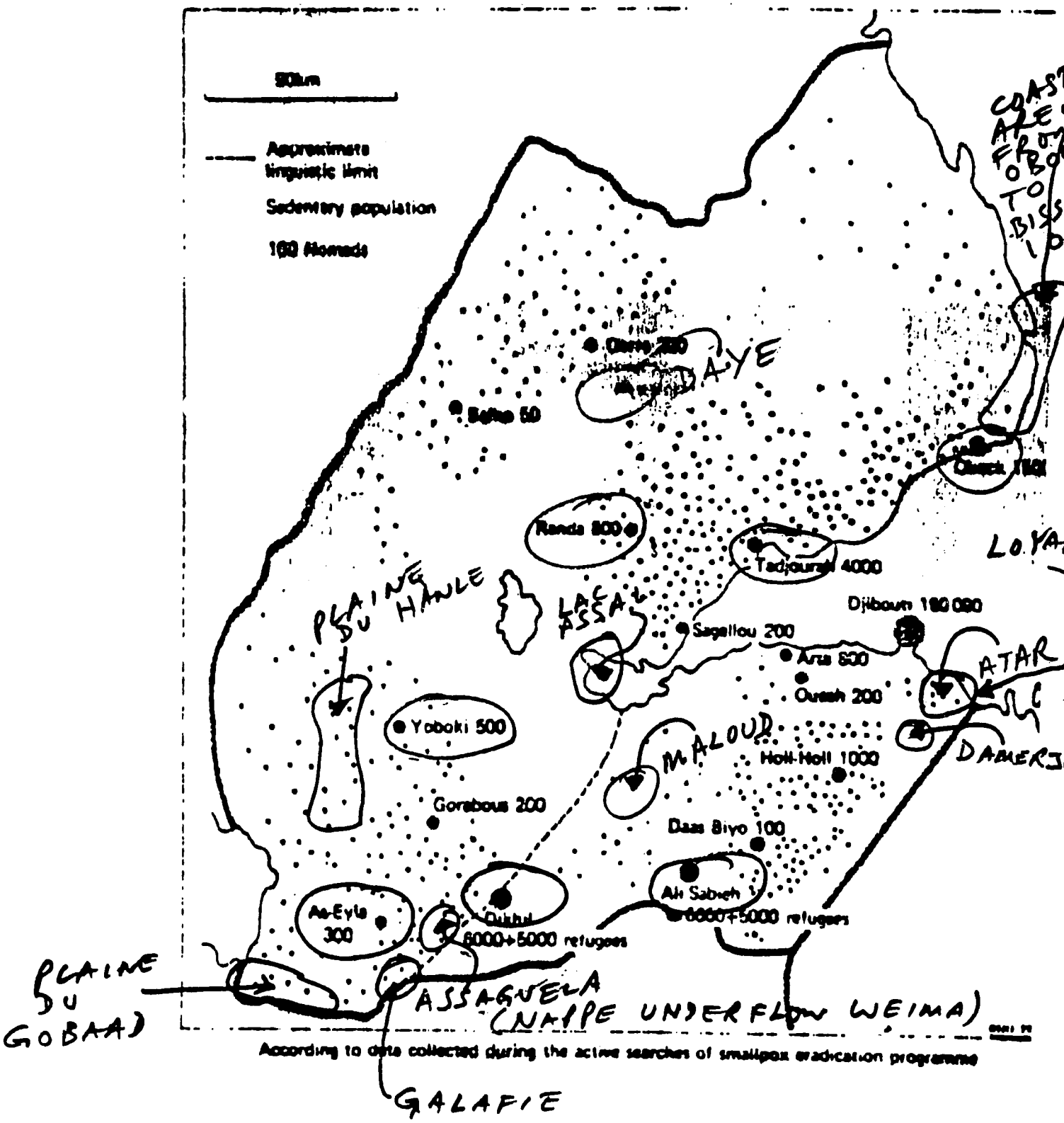

O = PROPOSED SITES FOR WIND MEASUREMENTS

Wind records in Djibouti are neither complete nor sufficiently detailed throughout the country, nor are they completely interpreted, as measurements are only taken at three or four specific times during the day. But it is well known that there are apparently some reasonably windy areas in the country. They are apparently directional, depending on the climatic conditions existing at the time. While the recorded windspeeds on the coastal areas are sporadic and relatively low, averaging four to six meters per second, in certain other specific areas, wind energy has been found to be profitably exploitable, from experience gained in installation of windmills already. The map of Djibouti showing proposed sites for wind measurements is attached on the next page.

It has been found evident that Djibouti received adequate solar radiation. Results obtained in the city of Djibouti are not representative as conditions prevailing in the hinterland. In the interior the humidity and haze are less with better radiation levels during the dry season. Existing data show that the daily averages for different months, January to December, 1973-1977, per calories per square centimers per day, range between 338 to 576 (uncorrected for temperatures).

The last energy option, fossil fuels, was chosen for project interventions. The case has been made elsewhere that Djibouti requires substitutable forms of energy other than fossil fuels. However, as noted in the introduction (Section II.A), up to 49% of current fossil fuel uses cannot be substituted because of the incomplete state-of-the-art technologies using fossil fuels (transport, lubricants, etc.). In order to make a useful positive impact on this percentage in Djibouti's energy future, ways need to be found to make either the types of fossil fuels (gasoline, diesel, kerosene) or machanical end uses (shaft, motive power more efficient, through conservation.

Step 1: Energy options

ISERST has a mandate in energy to undertake research, development and demonstration on geothermal, wind, solar and other available renewable energy as well as on conservation practices to save fossil fuels.

Project interventions in geothermal were investigated, and were regected on two grounds. Firstly, the expense and risk of research and development is beyond USAID's budgetary capacity. Test-bores are essential for meaningful resource inventory data; and, each bore would cost in the neighborhood of $1.5 million. Furthermore, such a capital-intensive activity do[illegible]t fit within USAID Djibouti's programming priorities set forth i[illegible]s country development strategy statement. Secondly, the other don[illegible]s are quite active in this field. The Italians are undertaking a nationwide geothermal resource survey. They, along

with the French, the European Economic Community and the United States are undertaking additional studies and test-borings.

Options for biomass and mini-or micro-hydro were rejected simply on the basis of no such resources existing in sufficient abundance.

Solar and wind energy development was finally chosen on the basis that the country has sufficient resources and that the state-of-the-art for appropriate end-use technologies was sufficiently developed in the United States in order to facilitate useful technological transfer and training.

Step 2: Needs

The uses of wind and solar energy in developing a limited agricultural base do not appear very promising at present. The present strategy for vegetable and fruit production is currently based on high rates of investment in irrigation equipment, fertilizer, and technical manpower. Without an adequate inventory of resources and indigenous manpower, future investment is a high-risk venture. The application of solar and wind power to pump irrigation water would exacerbate the high capital-intensity of Djiboutian agriculture. At the same time, deep-bored irrigation water sometimes contains a high enough salinity (three to five grams of salt per liter) to be counterproductive to proper management of plant-soil-water-nutrient relationships.

Similarly, for cooking, all possible technologies for this need were rejected on a number of grounds. Solar cookers (parabolic reflectors, concentrating collectors or photovolatic panels with batteries) can be used only outdoors in intense sunlight. The cooker has to be adjusted every few minutes to track the sun. The capital costs are moderate to high. Many traditional foods cannot be cooked on such devices. In addition, many very culture-bound activities involved in food preparation, serving time and place, food flavor and cooking participants present such a host of potential trait-changing requirements to meet solar cooking technological demands. In any case Djibouti lacks such an extensive extension network to affect such changes if desired. Even for nomads in the country who do cook during the hot time of the day would have to constantly assemble and dismantle such stoves in their frequent moves; let alone, carry the heavy financial burden individually or through society through subsidies. Finally, USAID Djibouti does not contemplate any capital-support assistance to its refugee camp feeding programs. If USAID did so plan, large solar stoves in central kitchens preparing meals or ready-to-eat snacks from PL-480 food commodities might be found later to be feasible technically.

Three needs were found sufficiently feasible to explore further possibilities for technological interventions:

- provision of drinking water
- supply of preserved fish
- energy conservation

First need: Drinking water

Water resources in Djibouti are confined principally to underground acquifers. Surface run-off from heavy rains and subsurface flow is weak and of a quantity that satisfies only limited consumption on an irregular basis. Only deep wells seem to possess sufficient quantity and recharge (in excess of 80 meters).

Rainfall is irregular, with the number of rainy days in a year averaging only about 10. In the plains rainfall ranges 110 to 150 millimeters per year, but the amount goes up to 400 millimeters in selected high altitude spots. However such averages disguise wide time-variations. In one year there may be a yield of 20 millimeters; in the following year it can increase to 450 millimeters. Evaporation ranges from 0.8 up to 1.5 centimeters per day due to the intense heat.

Most of the development projects in Djibouti are affected by water shortages. The recent drought has severely affected the economic livlihoods of many people. During the same time, 30 to 60% of the 100-or-so traditional and about 60 modern water wells dried up. At present water is rationed in two outlying towns to less that 30 liters per person per day, because of high refugee population increases. One of the town's current water supply suffers from a particularly weak recharge rate.

Djibouti's demand for water is already exceeding supply: an average daily need ranging seasonally from 26,000 to 32,000 cubic meters exceeding present daily yields of only 28,000 cubic meters. Deeper reserves are now yielding a greater water salinity. By 1986, given an estimated demand increase of 10% per year, the supply of water has to double with an additional 26,000 cubic meters per day. Even the proposed cement factory alone will require more than 300 cubic meters per day.

Second Need: Preserved fish

In Djibouti the fishing sector is made up of the following parties:
About 115 full-time and 50 part-time artisinal fishermen. More than about 80% of these people fish off the city of Djibouti with 10% each represented in the towns of Obock and Tadjoura respectively.

- About 10 entrepreneurs and a number of small scale vendors.
- About 50 persons engaged in maintaining about 60 boats and supply of equipment and gear.

Fishing takes place in local territorial waters off Djibouti. There is no significant Djiboutian open-sea fishing fleet.

Djiboutian fishermen harvest approximately 350 metric tons per year, supplemented by about 200 metric tons of sardines caught by Yemeni fishermen along the semi deserted north coast of the country. One hundred tons of the total catch are consumed by the fishermen or sold or bartered informally. The remainder - about 250 metric tons are marketed in the Central Market of the City of Djibouti and in the Cooperative retail outlet or in local public markets in Obock and Tadjoura.

Present consumption of fish averages a scale of 800-900 kilograms daily, mostly by the expatriate population. Most fish is sold in small pieces of 250 gram lots, outside of institutional demands. Most Djiboutians will add these pieces to the family stew-pot. The price is currently cheaper than goat or beef.

Given the intense heat during much of the year, spoilage is a particularly serious problem. The spread of secondary markets is severely hampered because un-iced fish has to be landed, transported, sold and even consumed within a matter of hours from night-time to early morning. Even local methods of sun-drying, such as practiced by the Yemeni fishermen in harvesting their sardinella are rather primitive.

Providing more preserved fish available in markets and areas not now served appears to offer the best opportunity to maximize fish consumption for obvious nutritional benefits to the population. Assured preservation, as one element in concert with greater availability, market promotion and favorable cost, will help to lead to greater acceptance.

One constraint that has been initially raised was the fear that dried or smoked fish may not gain very quickly a wide market in Djibouti. This point however is mooted by the present USAID fisheries project manager, who is prepared to undertake a commercial venture for dried and smoked fish, in collaboration with ISERST and USAID in provision of solar panels. In addition there is a large captive audience of more that 20,000 refugees and disaster victims who are currently being provided food commodities in camp-feeding programs. The Director of Catholic Relief Services maintains that such a target group will accept dried fish. As a captive audience it forms the bottom line in any test of acceptability.

secondly, in accounting terms, represents to the planner a no-cost equivalent of an additional energy purchase, applicable for higher priority uses later. In any case conservation in energy-poor Djibouti does not have to mean that individual people's psychological domestic habits have to be changed to stop squandering energy, as what has to happen in other societies where the appetite for oil is reaching crisis proportions.

In Djibouti there is scope for energy conservation in building design and construction materials. If buildings were differently designed; if more heat resistant materials were used; then, less electrical energy would have to be supplied for cooling. Similarly, if worker productivity were to increase by optimizing an ideal combination of temperature and humidity ("human comfort zone") then human energy would be conserved; i.e., made more efficient to do either the same or more work.

In a macro-energy and economic sense, there is also scope for improvement of industrial energy efficiencies in Djibouti. Soft drink and ice factories and cold storage have been established along with a mineral water processing and bottling plant, which may later produce polethylene bottles using imported plastic compounds. Construction industries include a number of production units related to floor and waste materials, cement, carpentry, plumbing and electrical-connection items. Industries in the process of being established include welding gas, furniture manufacture, insulating plastic materials, paint, tiles, ice cream and other dairy products and a tannery.

All of these industries have assuredly been established on economic or financial grounds (cheaper, import-substitution, export-promotion). But in energy terms these industries providing energy work are not compatible with the unexploited, but currently meager, domestic energy resource base. That of course is a factor beyond human control until geothermal, wind and solar technologies begin to take over a partial substitution or complementarity of imported fossil fuels. However, what is within human capacity to ameliorate is the present reality that many of these industries are energy-intensive, due to the existing state-of-the-art of their processes using electricity, hot air and steam. For example, most of the industries cited above are in the construction materials industry sub-sector (cement, bricks, glass, tiles). To give an idea how energy intensive these industries can be strictly on macro-economic grounds, one can refer to the situation in Tunisia, where this sub-sector consumes 29% of all available energy reserved for industry, but contributes slightly over five percent to the total industry proportion of the gross domestic product. In order to make energy and economics more compatible with one another, it is important to lessen this spread with energy

conservation practices.

Similarly in a micro energy and economic sense there is scope for energy conservation. In industries, again, one has observed that certain processes consume too much energy to produce too little work, because the technologies are over-designed on the assumption that there is plenty of cheap fossil fuel available.

The problem then is intuitively easy to perceive. However, the possible solutions are far more difficult to obtain, because of several counter-intuitive aspects in resolving finally some painful trade-off decisions. In order to clarify this point, consider the example where the electric utility in Djibouti is presented with the following possibilities:

- diesel engine powering a generator to produce electricity.
- the same diesel engine that could supply direct shaft power for driving other mechanical equipment.
- alternatively, an internal combustion gasoline engine used for either generating electricity or supplying direct shaft power.
- alternatively, an oil burning boiler producing steam to drive a turbine which could in turn generate electricity or direct shaft power.

In these cases, where do we begin to undertake energy conservation? Holding constant our needs for both energy end-uses (electricity and direct shaft power), should we substitute one fossil fuel for another; or, should we make the existing fossil fuel being used more efficient? On the other hand, if we decide to hold constant one or a number of presently-used fossil fuels, should we discard electricity and go in totally for direct shaft power, or vice versa? For example, from an energy viewpoint, direct shaft power is more efficient than electricity because there are less proportionate losses between input and output. But from an economic viewpoint, electricity is more cost-effective than direct shaft power because economies of scale take over with centralized electricity grids. We now have to juggle with five parameters (fossil fuel, electricity, direct shaft power, energy and economics).

In order to gain a clearer understanding how we can resolve the above questions, we need to digress briefly and define more precisely what we mean exactly by the word, efficiency. There are two basic types of efficiencies to consider in seeking potential improvements in the way machines and equipment use energy to deliver work.

The first type, called first law efficiency means that we can tighten up present technologies and designs by considering first the processes that convert energy to perform worktasks. We can insulate buildings better to make the existing processes of electrical energy more efficient. We can seal up leaky industrial steam lines to get more heat from existing energy sources. For example, by first-law efficiency standards, using electricity to heat air to dry fish is more efficient a process than using solar collectors. Much less electrical current is lost in this process proportionate to the greater losses suffered by capturing only about 30% of total solar radiation available and only 80% heat from the collector. Thus if we had only electricity and solar for heating air, we should choose electricity over solar. Of course our decision rests strictly on energy, not economic grounds. With solar radiation being a free good and electricity generated from a scarce exhaustible good, the final decision would be simply in favor of solar.

The second type, called second-law efficiency, means that we look first at end-use worktasks that have to be carried out (heating, pumping, etc), and then consider what is a perfect process to heat, pump, etc. Again, with reference to the above example on drying fish, when high quality energy such as fossil-fueled electricity is used for a low-quality job of providing moderately-hot air to dry fish, the electricity option is inefficient by second-law standards because the worktask of drying fish does not require all the possible energy that electricity can provide, compared with solar radiation that does not have to be created. Even if both electricity and solar radiation were economic free goods, we would still choose solar radiation in this case. In the same manner, if it were found that the "perfect" system to provide hot air is not even electricity nor solar radiation; but instead, we find that direct inflamed radiation comes closest of the three, then conceivable we should scrap both electricity generators and solar collectors and go in for a new wood-burning device or biogas plant, again assuming that biomass is as available as electricity or solar radiation.

However, decisions made strictly on the basis of second-law efficiencies would be facile if we did not take into consideration two caveats. Firstly, in energy terms, whatever new energy conversions and end-use technologies are required to optimize second-law efficiencies can still diminish net energy saving, because of the imbedded amount of energy that went into original manufacture of the energy using technology. For example, the amount of energy needed to manufacture building insulation material may cancel out whatever saving is yielded by lessening electrical energy to cool down a building interior; the walls of which have been insulated. Secondly, in economic terms, the required investment capital for research and development and commercialization is obvisiously going to be greatly increased, if Djibouti is persuaded to

go in for entirely new energy conversion and end-use technologies. Again we have to balance energy with economics: if the stock of financial capital is cheaper than the stock of physical energy, we might still go for the decision based on second-law efficiency. Such analysis is relatively new: yet, one study has already proven that energy saving in terms of calories can be four times greater practicing second-law efficiency than practicing first-law efficiency. (i.e., merely improving existing machinery).

With the above discussion in mind, the entire Djibouti energy Initiatives Project can conceivably be considered as a total energy conservation project. By starting with end-use worktasks (drinking water pumping, fish drying and freezing) instead of energy work process efficiencies, we are making some cut into resolving second-law efficiencies by development and installation of six wind and solar technologies. (i.e.,the second project Output). We have chosen this path, even recognizing that wind and solar devices waste more available wind and solar radiation per se compared with what lesser percentage of energy would be lost with electricity, or direct fossil-fuel shaft power. In a word, Djibouti has relatively more wind and solar radiation to waste than it has fossil fuels to conserve. On the other hand, we are not ignoring first-law efficiencies when we propose elsewhere a discrete project element by improving existing industrial processes and building design. (i.e., the fourth project Output). Finally, energy conservation trade-off decisions between first and second-law efficiencies have to be analyzed for ISERST's final report to Government on planning and policy recommendations (i.e., the fifth project Output).

Step 3: Executing agencies through ISERST

In order to translate the identified needs into viable technological solutions to Djibouti's energy problems, we have to assure that sufficient institutional mechanisms exist to deliver the energy worktasks for human benefit.

First Need: Drinking water

Supply of drinking water to the public is carried out by four bodies in Djibouti:

> An interministerial coordinating committee (Water Resources Commission) resolves policy questions in regard to water utilization; such as, legislation, coordination of research studies and water exploitation and conservation.
>
> Within the Ministry of Agriculture and Rural Development, the Rural Engineering Service is responsible for all as-

pects of water production and end-use delivery in rural areas outside the five district-headquarters towns of the country. In addition this Service maintains all sources of supply fed to these towns. It provides civil construction for other rural facilities, including even electricity to secondary towns. The Djiboutian staff of about 45 is complemented by seven French, German and American technicians. For installation of wind and solar pumps, this Service will act as the principal executing agency with ISERST.

The Water Supply Board, attached to the Ministry of Public Sector Industrial Enterprises, is a commercial parastatial organization supplying piped water to the five district-headquarters towns.

Second Need: Preserved fish

The Ministry of Agriculture and Rural Development maintains a Fisheries and Livestock Service, part of which is made up of the Fisheries Division. This Division has sponsored, with financial contribution from USAID Djibouti, the establishment of the Cooperative Association for Marine Fisheries of Djibouti. This Cooperative was established in late 1980 with approval of its by-laws. It currently has about 150 members and is administered by a committee chaired by the Chief of the Fisheries Division, with the Director of the Livestock and Fisheries Service reserving veto rights. The committee members are elected on the basis of demographic data and proportionate representation of the total fishing population. The cooperative maintains its own fiscal account and uses a revolving fund initially set up by USAID Djibouti to procure additional commodities as well as wholesale purchase of fish from producer-members. In its marketing functions the Cooperative maintains a 24-hr. a day freezing reception point for landings and operates a retail outlet. This organization will act as the principal executing agency with ISERST in the installation of the solar stills, wind electrical generator for fish freezing and the solar hot-air collector for drying (and smoking) fish.

Third Need: Energy conservation

Since ISERST is not supplying tangible hardware to potential users as it will eventually be supplying to the Rural Engineering Service and the Fishing Cooperative, ISERST should maintain a looser institutional relationship with end-users. In close cooperation with the Directorate of Planning, ISERST can establish relationships with the Ministry of Public Works and the Ministries of Industries in order to influence private as well as public sector adoption of energy conservation

practices. Rather than acting in a hardware supply mode ISERST will disseminate its studies on energy audits to end users.

Step 4: Identifying energy producting technologies

For the two identified needs - drinking water and fish preservation- using wind and solar energy only, six end-use prototypes have been selected. Before they are examined in detail by each prototype, the table below summarizes for each prototype important characteristics about the work that these prototypes will perform.

PREVIOUS PAGE BLANK

Characterization criteria/devices	solar still	windmill water pump	photovoltaic water pump	electrical wind generator and refrigeration with controls and standby	solar panels with controls for fish drying	fish smoking
Form of Energy that can satisfy demand	Convert hot saline water into steam thru evaporation & then into drinking water thru condensation w/ direct solar radiation.	Direct mechanical shaft power.	Direct current electricity with motor for mechanical shaft power.	Electricity powers motor which in turn powers compressor and fans with internal combustion engine and electric generator as stand by.	Flat plate collector to provide hot air.	Wood burning fireplace producing smoke is installed in drying tower that is coupled w/hot air coming from solar panel
Level of heat to perform required work	Near evaporation point: 98-99°C.	Not Applicable	Not Applicable	Not Applicable	45-75° C.	Varies
Time of day when Energy is required to Perform task	Daytime only	24-hrs. a day	Daytime only	24-hours a day	Daytime only	Daytime only
Duration of Time Per Day Required to Perform Task	7-8 hours	0-24 hours	7-8 hours	0- 24 hours	7-8 hours	7-8 hours
SOCIAL	Taste of distilled water may differ from customary non-salty water taken elsewhere; thus influencing consumer taste.	Operated & maintained by government provider w/probable minimal community involvement. Such sub surface wells may alter work & social patterns of women & children who fetch water from less accessible places. Taste of water may be different, influencing consumer acceptance.		No methods of cooling fish may be preferred because of enhanced flavor or texture.	May compete w/traditional fish drying methods with no perceived additional advantage. Taste of dried and smoked fish may affect consumer acceptance.	
COST AND OUTPUT	Between $400-$600 for 6-9 l/ day during 7-8 hours of operation.	$60,000 per 80 m^3/day.	$80,000 per 80 m^3/ day.	$85,000 per max. 23,400 watts cooled air/hour.	$600 2050 watts hot air/hour.	$150 for high intensity and volume of smoke using max. a few kg. of wood per day.

Characterization criteria/devices	solar still	windmill water pump	photovoltaic water pump	electrical wind generator and refrigeration with controls and standby	solar panels with controls for fish drying	fish smoking
Form of Energy that can satisfy demand	Convert hot saline water into steam thru evaporation & then into drinking water thru condensation w/ direct solar radiation.	Direct mechanical shaft power.	Direct current electricity with motor for mechanical shaft power.	Electricity powers motor which in turn powers compressor and fans with internal combustion engine and electric generator as stand by.	Flat plate collector to provide hot air.	Wood burning fireplace producing smoke is installed in drying tower that is coupled w/hot air coming from solar panel
Level of heat to perform required work	Near evaporation point: 98-99°C.	Not Applicable	Not Applicable	Not Applicable	45-75° C.	Varies
Time of day when Energy is required to Perform task	Daytime only	24-hrs. a day	Daytime only	24-hours a day	Daytime only	Daytime only
Duration of Time Per Day Required to Perform Task	7-8 hours	0-24 hours	7-8 hours	0- 24 hours	7-8 hours	7-8 hours
SOCIAL	Taste of distilled water may differ from customary non-salty water taken elsewhere; thus influencing consumer taste.	Operated & maintained by government provider w/probable minimal community involvement. Such sub surface wells may alter work & social patterns of women & children who fetch water from less accessible places. Taste of water may be different, influencing consumer acceptance.		No methods of cooling fish may be preferred because of enhanced flavor or texture.	May compete w/traditional fish drying methods with no perceived additional advantage. Taste of dried and smoked fish may affect consumer acceptance.	
COST AND OUTPUT	Between $400-$600 for 6-9 l/ day during 7-8 hours of operation.	$60,000 per 80 m^3/day.	$80,000 per 80 m^3/ day.	$85,000 per max. 23,400 watts cooled air/hour.	$600 2050 watts hot air/hour.	$150 for high intensity and volume of smoke using max. a few kg. of wood per day.

Characterization criteria/devices	solar still	windmill water pump	photovoltaic water pump	electrical wind generator and refrigeration with controls and standby	solar panels with controls for fish drying	fish smoking
Form of Energy that can satisfy demand	Convert hot saline water into steam thru evaporation & then into drinking water thru condensation w/ direct solar radiation.	Direct mechanical shaft power.	Direct current electricity with motor for mechanical shaft power.	Electricity powers motor which in turn powers compressor and fans with internal combustion engine and electric generator as stand by.	Flat plate collector to provide hot air.	Wood burning fireplace producing smoke is installed in drying tower that is coupled w/hot air coming from solar panel
Level of heat to perform required work	Near evaporation point: 98-99°C.	Not Applicable	Not Applicable	Not Applicable	45-75° C.	Varies
Time of day when Energy is required to Perform task	Daytime only	24-hrs. a day	Daytime only	24-hours a day	Daytime only	Daytime only
Duration of Time Per Day Required to Perform Task	7-8 hours	0-24 hours	7-8 hours	0- 24 hours	7-8 hours	7-8 hours
SOCIAL	Taste of distilled water may differ from customary non-salty water taken elsewhere; thus influencing consumer taste.	Operated & maintained by government provider w/probable minimal community involvement. Such sub surface wells may alter work & social patterns of women & children who fetch water from less accessible places. Taste of water may be different, influencing consumer acceptance.		No methods of cooling fish may be preferred because of enhanced flavor or texture.	May compete w/traditional fish drying methods with no perceived additional advantage. Taste of dried and smoked fish may affect consumer acceptance.	
COST AND OUTPUT	Between $400-$600 for 6-9 l/ day during 7-8 hours of operation.	$60,000 per 80 m^3/day.	$80,000 per 80 m^3/ day.	$85,000 per max. 23,400 watts cooled air/hour.	$600 2050 watts hot air/hour.	$150 for high intensity and volume of smoke using max. a few kg. of wood per day.

Technology 1: Solar Still

It is contemplated that solar stills should be built for provision of drinking water for those currently harvesting red algae on the remote island of Moucha, and for fishermen in similar and other remote locations. Such water distillation stills are practical for those who have access to surface saline or brackish water.

There are several ways a technologist can convert saline water into pure water. One is by electrolysis, by which salt is separated from water by electrical charge. Another way is to use fossil fuels directly or electricity to evaporate water through heat, and then condense through cooling. In both cases one has to borrow expensive energy. Instead of making fossil fuel or electricity processes more efficient in themselves to distill water (i.e., first-law efficiency) it would be wiser to look at the end-work first and consider an alternative power source - solar. This energy form may be less efficient from first-law standards, but, because of its free abundance, it is more efficient according to second-law standards. However one must note that water output is limited, as the practical commercial minimum prototype creates only six to nine liters of pure water for seven to eight hours of intense sunlight. But the cost is relatively cheap - between $400 to $600 to install.

How solar stills work is as follows: solar radiation heats the bottom surface of a water container. Glass acts as a good pass-through for solar radiation, and yet is a bad conductor for heat transfer. At the same time glass keeps the heat generated from radiation enclosed. As the water inside becomes heated to the point of evaporation - close to 100°C., it becomes vapor and rises to the top and hits the glass surface, while leaving salty matter at the bottom of the water container. The vapor hitting a cooler surface of glass then is turned into a large number of droplets, which after more cooling, agglutinate into fluid again and slide along the glass onto an outside trough receptacle. The sketch attached portrays the processes described above.

In order to fabricate such a device it is necessary to cut the frame to the size required to support the entire structure, and to tie other members to the frame to form a retaining basin. The entire structure needs to be insulated so that heat will not dissipate from inside. The final inside layer has to be blackened with paint or black material such as plastic. In order to make the structure leak proof, it will be necessary either to solder metal or caulk wood. Troughs will have to be installed and glass assembled over the frame in order to prevent vaporized water to escape.

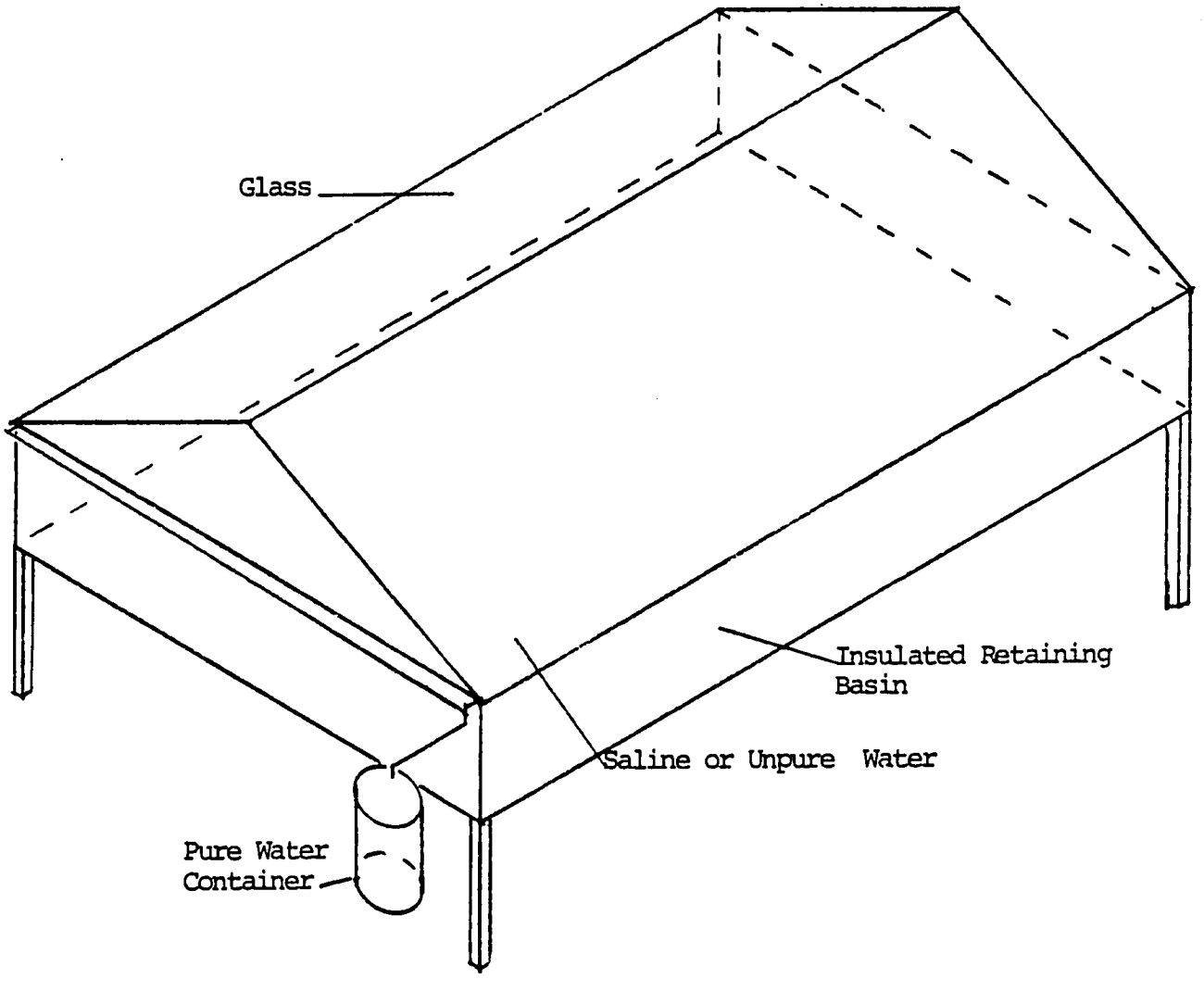
Glass
Insulated Retaining Basin
Saline or Unpure Water
Pure Water Container

SOLAR - STILL

The basin has to be periodically emptied of impurities and the device has to be checked for leaks. The black surface will have to be either re-painted or the plastic re-surfaced, due to possibilities of later cracking from the intense heat generated inside. Such maintenance functions need to be performed weekly.

All supplies for solar stills can be obtained locally: glass or translucent plastic material; metal or wood frames; metal or wood troughs; black paint or plastic; styrofoam or fiberglass for insulation and other appropriate material to resist wind and storm pressures.

Skilled labor will be required to produce drawings and to fabricate the basin and the frames. Unskilled labor can help in rough work and in hauling materials.

Purified water for drinking can also be used for washing or cleaning if found necessary. This operation is relatively labor-intensive and maximizes the use of local materials at a cheap enough cost to faciliatate its later diffusion elsewhere in the country. However, note should be taken that the taste of distilled water may differ from customary non-salty undistilled water; thus, influencing consumer acceptance.

Technology 2: Windmill water pump

When there is no potential for geothermal electricity; or, where the cost of extension of existing fossil-fuel-fed electricity lines is prohibitively high, wind machines can serve as a useful alternative, given adequate supply.

Wind provides direct mechanical shaft power. Wind pressure is put on the propeller, which in turn powers a gear box that will turn cam and activate a vertical rod. By the rod's up and down motion, compression and suction in the pump is created. A foot valve allows water to run in one direction. Thus water is pumped up through a pipe and discharged into a storage tank. It is important to insure that non-saline water be pumped so as not to damage the pump. See attached sketch.

The windmill will come disassembled in individual boxes. It should be re-assembled at the ISERST workshop before being sent to the field for installation. The performance of the propeller, gear box and pump will be tested. The pump can be connected to a barrel of water. From gauging the pressure, one can find out how deep it will be possible to pump water. Field installation will be supervised by the engineer on site.

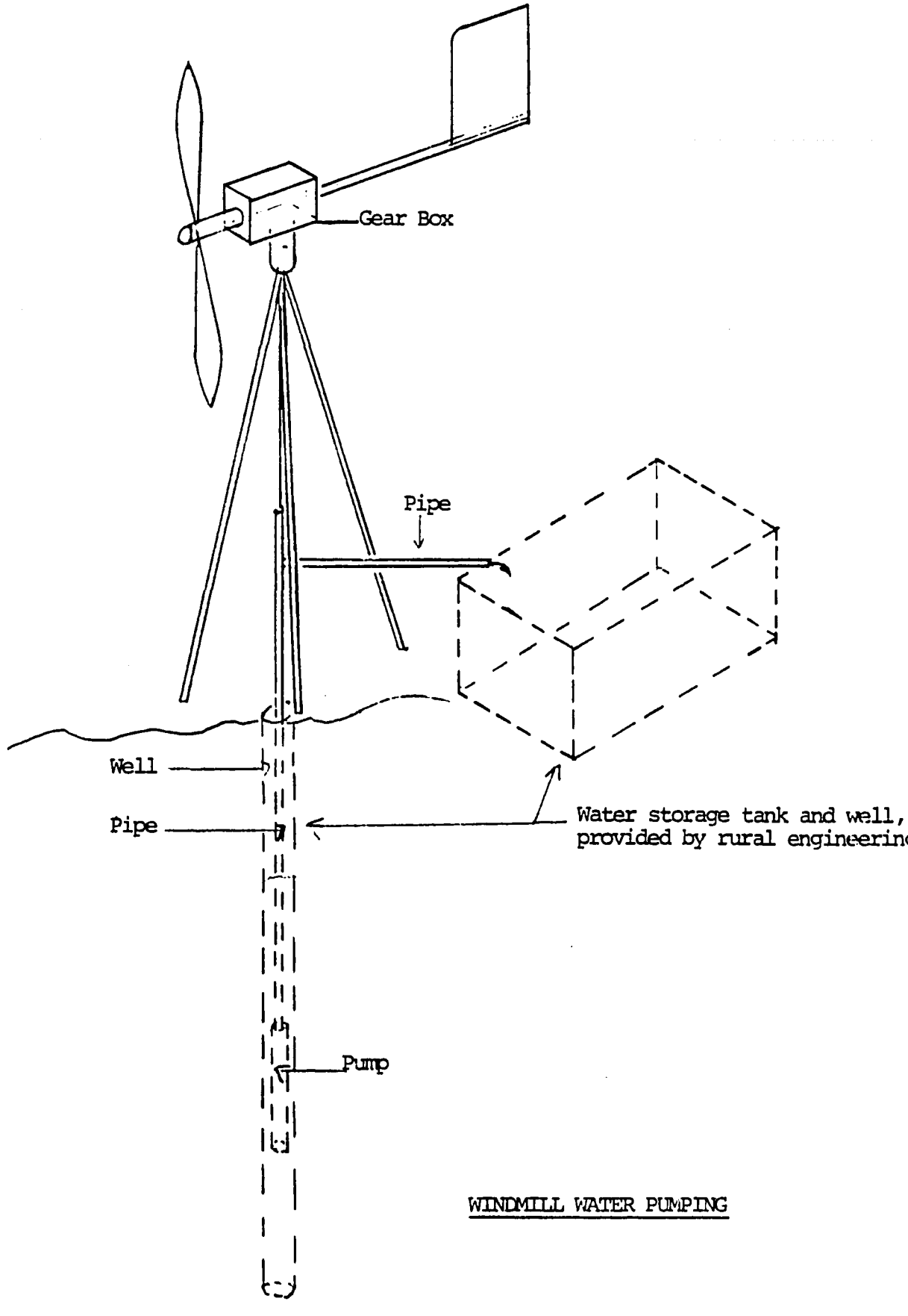

WINDMILL WATER PUMPING

Manufacturer's instructions need to be followed closely. During the test assembly at ISERST in Djibouti city, the engineer will point out what has to be maintained. In the field the gear box has to be greased every two to three months.

Most of the parts need to be specifically procured from outside; supporting frames, windmill mechanism including propeller, vertical rod, pump, foot valve and well pipe. What is available locally are discharge pipes, concrete for the foundation and storage tanks.

Other than the need for a skilled mechanic to assemble the gear box assembly, other workers can be unskilled.

A realistic scale unit will cost about $60,000 to yield up to 80 cubic meters of water per 24-hour day, assuming maximum wind.

Technology 3: Photovoltaic water pump

This device is largely justified for training and demonstration purposes. The potential for commercialization in Djibouti must await until lower costs per peak watt hour become materialized about five years from the present time. In the future photovoltaics will become economically and financially competitive with other systems. The emphasis on training will include how to install the photovoltaic panels and the complete water pumping set, and how to maintain the equipment. Such pumps can be used again where existing electricity or future geothermal electricity is not available. Again it is important to avoid saline water in order to avoid damage to the pump. We will have to know the depth for the already-dug well before ordering the photovoltaic arrays and pump.

The technology provides direct current electricity to energize a motor providing mechanical shaft power to pump water. Solar rays hit a photovoltaic panel and create electricity. A sufficient number of these panels creates adequate power conveyed to outgoing cable into a monitoring device, which then allocates electricity for turning the motor. This in turn will activate a pump which brings water up from the well and discharges into a pipe and then into a storage tank. See attached sketch.

The manufacturer of the photovoltaic system will have to provide the engineer with a sketch of the frame support for the arrays. Then the workshop in Djibouti will have to fabricate these frames. Once the imported panels fit inside the frame, then the photovoltaic cells will be tested outside the workshop in order to check the electrical power output. The engineer needs to be assured that there is sufficient

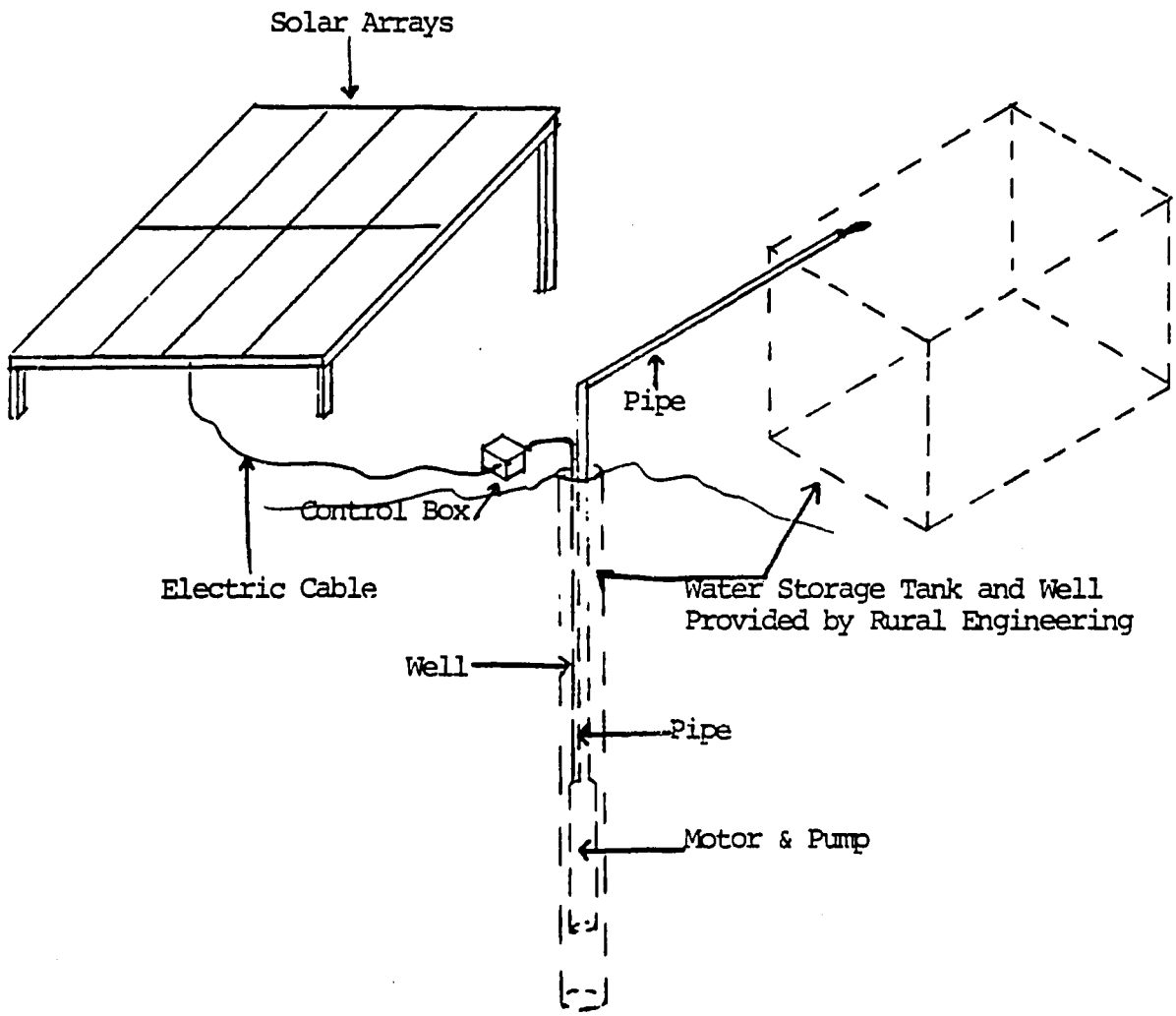

PHOTOVOLTAIC WATER PUMPING

power for the electrical motor and pump and to check also if there are any problems in operating by letting the motor run for a short time. Then the system will be de-assembled with disconnection of all wiring, as well as the support frame and each one of the photovoltaic panels put again into boxes and carried to the site for installation with steel or plastic water pipes. It will be the responsibility of the Rural Engineering Service to provide the well, concrete base and water retaining tank.

Maintenance procedures need to follow closely manufacturer's instructions. At least once a year the motor and pump have to be cleaned and lubricated for all accessible mechanical components. The photovoltaic arrays have to be cleaned quite often because of dust. The panels can resist usual climatic disturbances except for heavy sand storms.

Except for cement and water storage tank, all other parts have to be especially procured from outside, even the electrical motor which is designed for only photovoltaic power.

Mostly skilled artisans will be required for the framework construction and for the installation. Unskilled labor can be used for unpacking and for hauling.

This device can also be used to provide electric lighting and even to do milling and grinding, if institutionally feasible. There is anticipated to be little income and spread effects for this device until well after completion of the project when the system becomes cost-competitive. Its benefit at present is for training.

This device will cost about $80,000 to install, yielding about 80 cubic meters of water for seven to eight hours of intense sunlight.

Both the windmill and photovoltaic pumps will be operated and maintained by a government provider with probably minimal community involvement. Such sub-surface wells may alter work and social patterns of women and children who collect water from less accessible places. Again the taste of deep sub-surface water may be different from what people are accustomed, hence, will influence consumer acceptance.

Technology 4: Electricity wind generator and controls with refrigeration with standby system

Electricity powers a motor which in turn powers compressor and fans, with an internal combustion engine and conventional electric generator as standby equipment. An electrical generator powered by

wind will replace the gear box provided for water pumping. Otherwise the framework structure is the same for both the pump and for the generator. See attached sketch.

As distinct from the wind water pump, electricians will have to maintain wiring and connections for the electric generator. A local outside mechanic will have to install the refrigeration system.

All parts for this device have to be especially imported for this project. The Fishing Cooperative will have to build the foundation The Cooperative will supply the cold storage room.

Although capital costs for wind electricity generation may be higher than for the same for fossil fuel generated electricity for the comparative scale, recurring costs for wind electricity will be down, while those costs for conventional energy will go up. From an economic viewpoint, society should bear the heavy capital cost and let the individual investor-user bear the moderate recurrent costs, rather than vice versa.

The entire system will cost approximately $85,000 to yield a maximum of 23400 watts of cooled air per hour.

Note needs to be taken that uncooled fish may be preferred by some because such methods, rather than freezing, will enhance the flavor and texture of the fish.

Technology 5: Solar panels with controls for fish drying

There are a number of technological alternatives to dry fish. The traditional method of laying on the sand is not sanitary with high insect infestation, and takes a long time to dry; with required surveillance to prevent rot setting in. Another way would be to put fish on a rack alone or on one with legs; the latter facilitating better circulation in order to accelerate drying. Another way is to use a solar cabinet dryer, but there is poor control of temperature to maximize drying. Another possibility is a flow-through cabinet using a flat plate collector to provide hot air produced from solar radiation, rather than with butane gas, wood or electricity. These are two additional advantages: this flow-through device has the same advantages of the other solar cabinet dryer, but there is provision here for better temperature controls. In addition, this device allows air to flow around the fish, not just on one side, as would prevail with the other type of solar cabinet dryer.

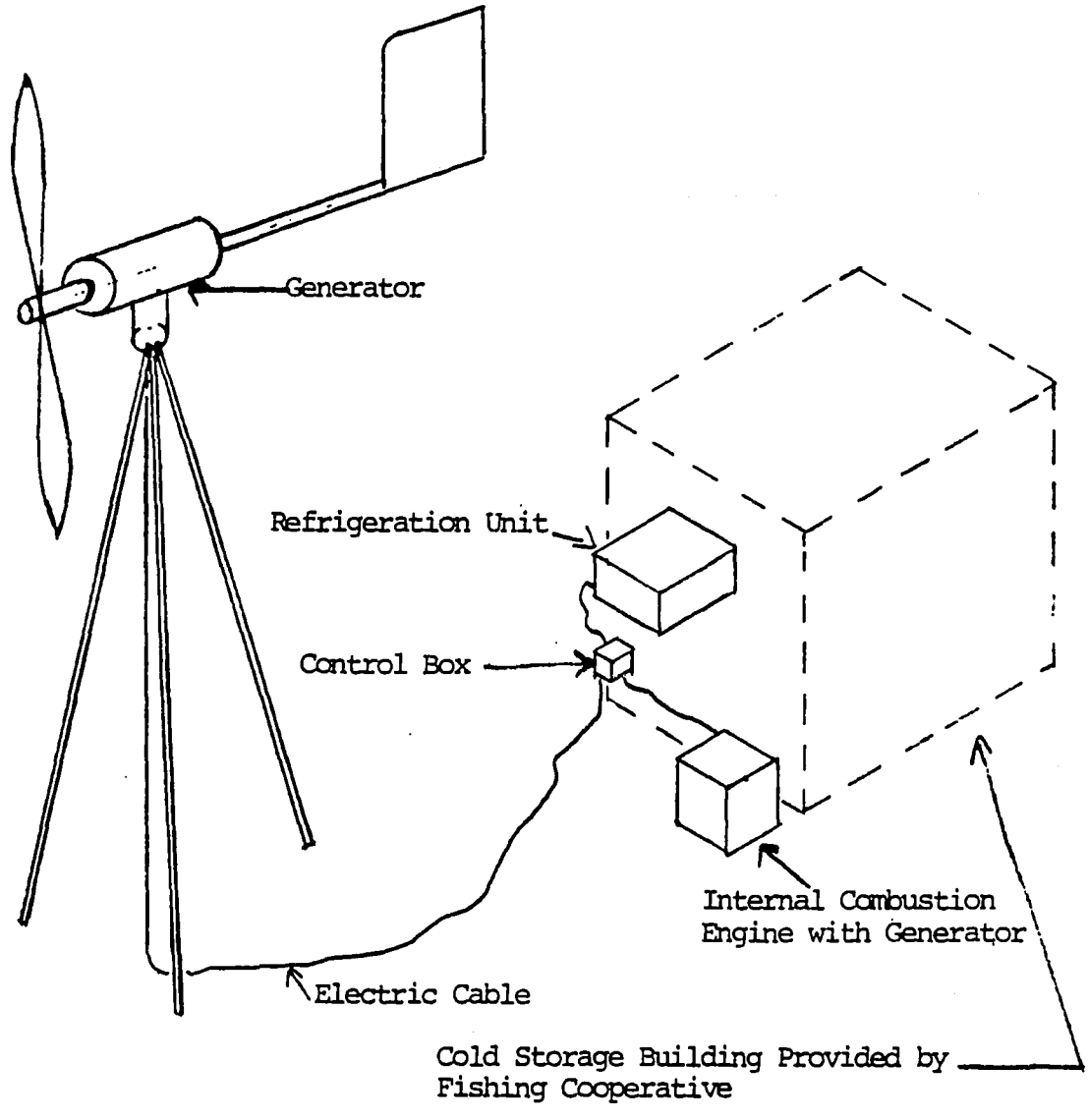

WINDMILL GENERATOR
AND STANDBY

INTERNAL COMBUSTION ENGINE
WITH GENERATOR.

The fish are brought to the drying tower on trays and installed inside on different levels. The tower is then sealed. The duct connecting the collector to the drying tower is equipped with a manual camper. By opening or closing the damper, the amount of air to the drying tower and the temperature (45°-75°C) in the tower is controlled.

Hot air performs its job in drying by lessening the humidy from fish tissue. There is a thermometer located in the drying tower to guide the operator in opening and closing the damper. See attached sketch.

The solar panel can be made of wood or metal or bricks in a five-walled box, with wrap-around insulation. The box surface needs to be painted black or surfaced with black materials in order to maximize absorption of heat. An opening is provided on one side at the bottom of the collector and on the opposite side on the top for the hot-air outlet. The top is of glass or transparent plastic.

The tower can be built with any local materials, including insulation. Trays could be made out of wood and wire or metal.

In order to operate the fish dryer an individual will have to control the damper, and check the thermometer. Maintenance needs to focus on cleaning the glass and black surfaces often and to insure that the collector and tower remain air-tight to prevent insect infestation and loss of heat.

All supplies for the fish dryer can be obtained locally - wood, insulation, glass, sheet and angle-iron metal, bricks and concrete blocks.

There is need for at least one skilled laborer capable of doing all measuring and cutting of primary materials. The rest of the workers can be unskilled.

The fish dryer has a great potential for replication because all materials are available easily; the process for construction is not sophisticated and is labor-intensive. Skills required in manufacture are easily compatible with other carpentry and metal work employment possibilities in the country.

The fish dryer prototype will cost about $600, and will yield 2050 watts of hot air per hour for seven to eight hours of intense sunlight per day. Note should be taken that this improved type of fish drying competes with present traditional methods that the Yeminis use to dry their sardinella.

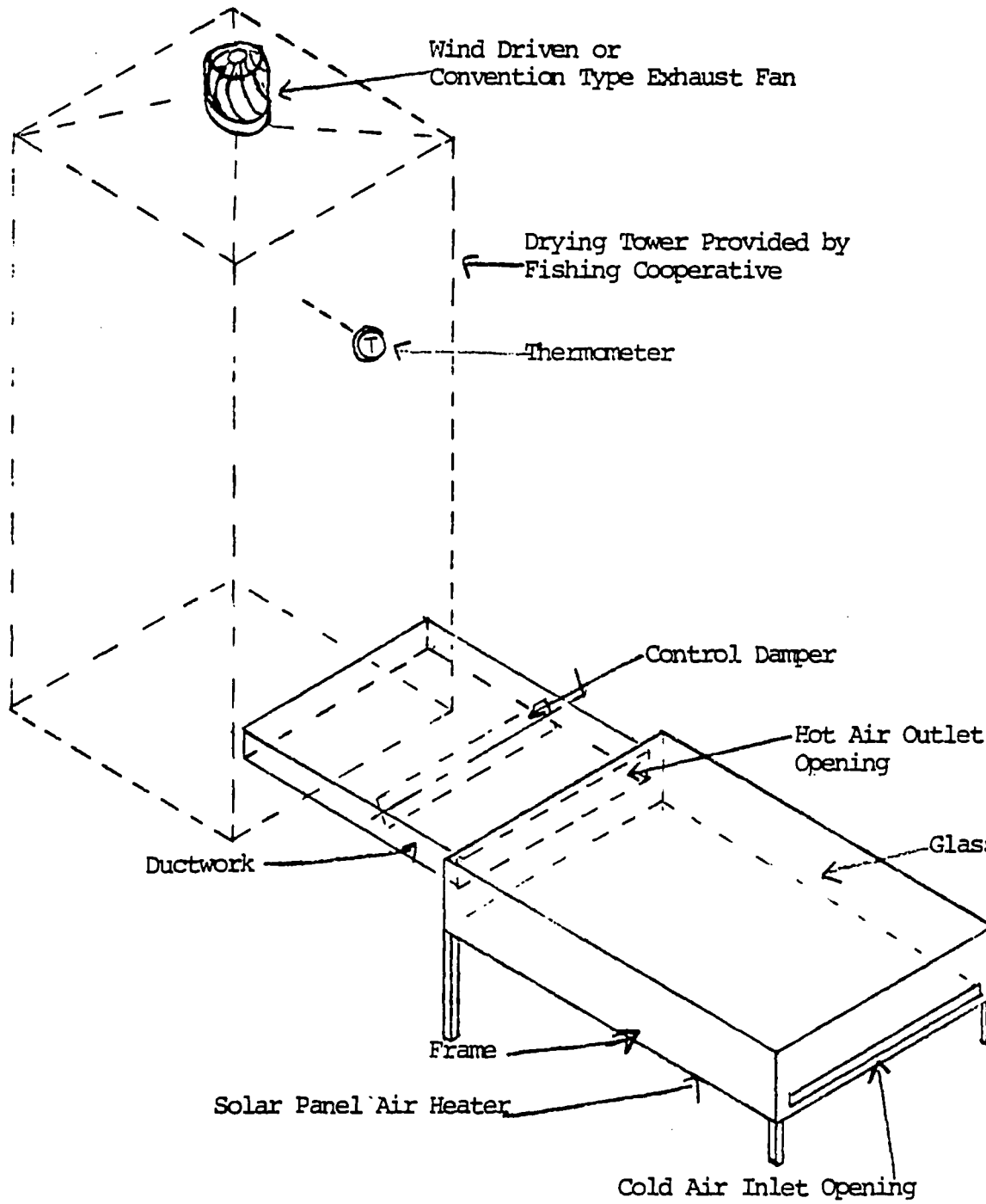

FISH DRYING SYSTEM

Technology 6: Fish smoker attached to dryer

Smoking fish is desirable as a new taste to develop a new consumer market. Such a process can be installed within the fish dryer. A metallic cone covering a wood fireplace with a damper can be built to insure that oxygen is minimized in order to get as much smoke as possible. All materials are available in Djibouti. See attached sketch.

For operation, three factors need to be controlled: First, the damper to regulate temperature, with help of a thermometer; second, humidity with the water poured into the air discharge from a bucket or pipe, with also help of a humidstat; and, third, a damper for regulating smoke, employing visual observation of intensity and volume of smoke.

This device can cost about $150 and needs to use only a few kilograms of wood a day. Note should be taken that the taste of fish resulting from drying and smoking may affect consumer acceptance. However initial distribution will be made in the refugee camp feeding program in order to understand consumer reaction better.

Step 5. Identifying Energy Conservation Processes

There are four specific strategies to undertake in improving on first and second-law efficiencies:

- improving conservation planning by instituting energy audits
- reduce transfer of solar radiation inside buildings
- improve controls and usage methods in industrial processes
- achieve a long term research and development program in maximizing second-law efficiencies.

Energy audits

Data need to be collected to get better control over present processes to larger term actions by replacement of obsolete equipment by new designs using modern technologies. We have to look into a number of factors: conversion processes, proper units of measure, types of fuels, fuel analysis, instrumentation, analysis of data, capacity, utilization effects, quality of heat, system boundaries, use of scrap materials and recycling. It is possible to use textbook values to calculate minimum amount of energy which must be used to perform any task, since a great deal more than the minimum amount of energy is

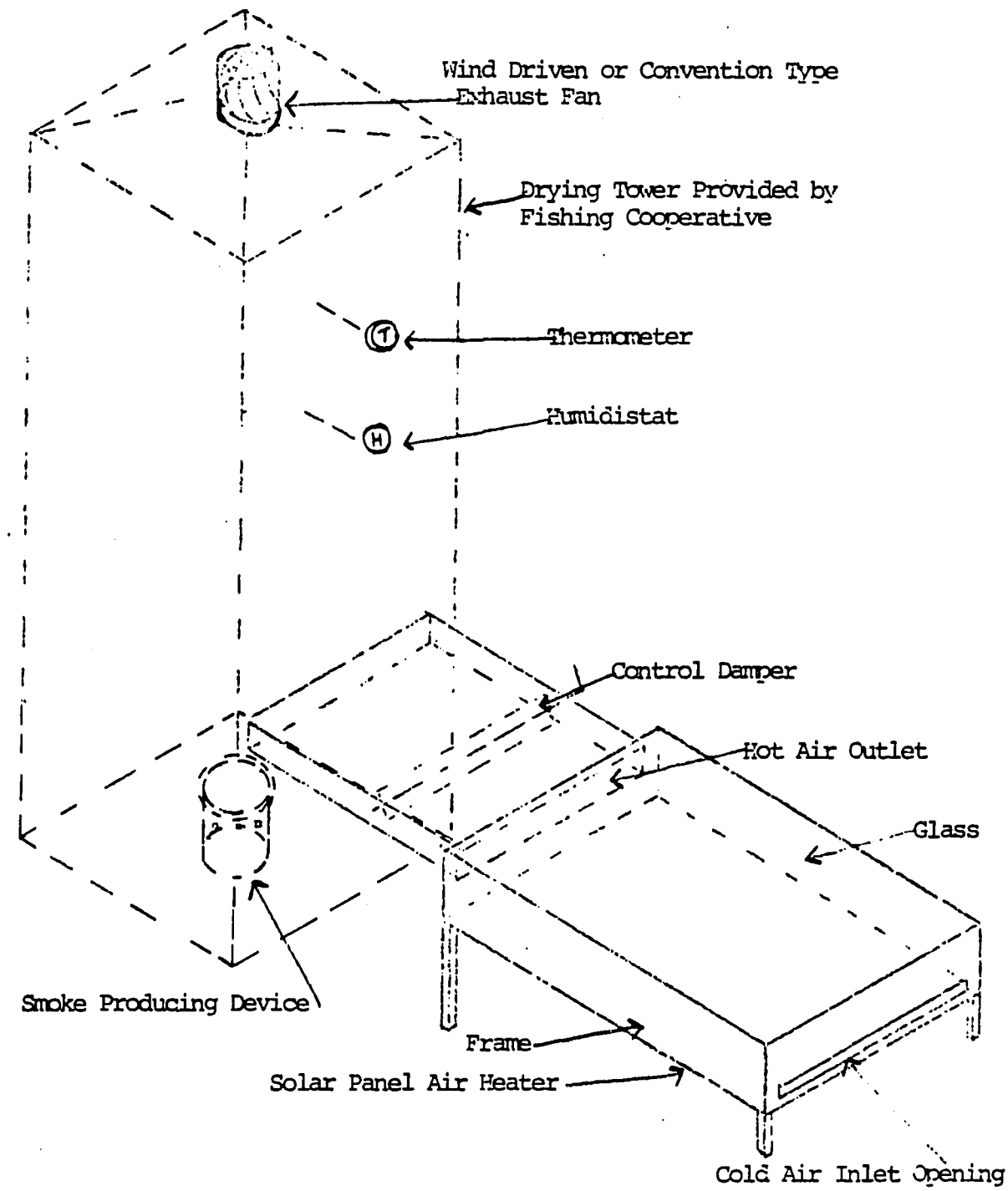

FISH SMOKING SYSTEM

always consumed. Thus by comparing actual consumption to minimum required consumption, opportunities for system improvements can be identified.

For first-law efficiencies, the following questions need to be answered:

- what percentage of the energy content of the particular energy source offered is actually delivered to do the required end-use work.
- identify process changes that would increase or decrease energy consumption
- identify fuel substitution opportunities to alter a fuel mix
- measure energy impact of these process changes or fuel substitutions on production rates and overall energy consumption
- compare energy costs of alternatives for producing the same commodity, using the payback period method of financial analysis.

Reducing transfer of solar radiation inside buildings

With the above data base we can now apply practices to three fields: buildings (better materials, improved design and more natural ventilation); industrial processes; and, improved technologies.

For improved materials we need non-imported concrete blocks and bricks. Local lava material would be ideal for lighweight insulation, to prevent solar heat penetration. We also need to add insulation above the ceiling. Tar paper is used to prevent rain from coming into the house and gravel is used to protect the tar paper. These two heat-absorbing materials will become much hotter than outside ambient temperature to prevent radiation of heat inside the building one must add insulation below the roof.

The designs of buildings could be modified to provide natural drafts between double walls and the ceiling. The double wall principle calls for air circulation between two walls and exhausted through the roof by natural or mechanical power. What occurs is that the outer wall heated by solar radiation will radiate heat to the inner wall. The consequent heated air between the two walls rises by convection and goes

out through the gravity or power ventilator. Similarly an air space can be made between the roof and ceiling for air drafts to escape through a ventilator. With such doubling of walls and attics we can conserve about 40% of electrical energy used for cooling. This method is much cheaper than even using a good insulation material such as styrofoam. See attached sketch.

Much better ventilation can be assured for factories, offices, shops and residences. When manual workers in a factory are not exposed to an optimal combination of temperature and humidity, their productivity and efficiency suffer. Positive air flow ventilation will increase such efficiency through natural drafts or mechanical cooling. Just opening windows and doors does not always assure optimal ventilation. Exhaust fans should be considered. Thus we are making an energy conservation decision whether the increase in worker productivity (human energy) will offset the required increase in mechanical energy to achieve such worker efficiency.

Improve controls and usage methods

Properly designed mechanical devices and controls in the area where there is usage of energy would be recommended. If electrical power is used we need to confirm that the end-use technologies are not over-designed, using too much energy for too little required benefit. Useful horsepower and driving horsepower should be the same.

Resource recovery should be considered if steam is used for processing. The resultant condensation or heat from industrial waste or industrial hot water should be recovered for additional energy uses. Similarly steam or hot water devices need to be checked for consumption flows against minimal requirements, necessitating perhaps more controls.

Achieving a long term research and development program

ISERST should consider two important projects for looking into second-law efficiency practices. First by commercialization and diffusion of information on similar uses elsewhere for solar and wind-powered water pumping and food preservation, such end-use energy worktasks can be enhanced. Second, ISERST can beneficially expand on new energy end-uses for renewable energy - when irrigation using renewable energy becomes practical; when central cooking using solar stoves is feasible; and when geothermal electricity can be plugged into the existing national grid.

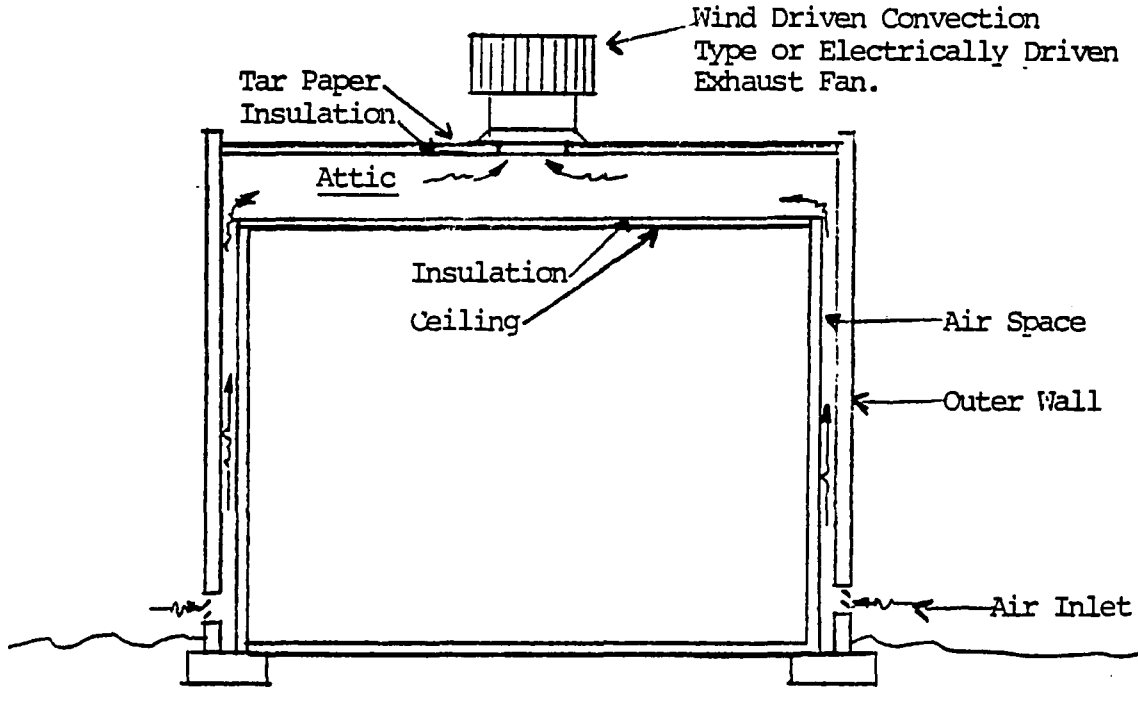

SECTION

ENERGY EFFICIENT BUILDING CONCEPT

Annex B

Economic Analysis

An in-depth analysis showing economic applications of several of the alternative technologies follows:

Solar Drying

With Djibouti's limited agricultural production, major application of solar drying techniques will be in the fishing sector. At present, the USAID fisheries project , with assistance from CRS, is drying sardines in the sun. Sun drying is practical but it has the following disadvantages which solar drying units can correct:

a) the traditional process is uncontrollable as it is at the mercy of the elements
b) good quality of the product cannot be guaranteed
c) a large area is needed for drying purposes
d) sanitation cannot be controlled, as the food can often be contaminated by dust, insects, birds and rodents
3) sun drying is time consuming

The existing Djiboutian technique for sun drying of sardines uses wire racks which are one meter by two meters which can dry 100 kilos of wet sardines per week. Each rack is separate (i.e. they do not stack on top of the other) and they cost about $600 each, complete with necessary screening. Current demand for dried is 156,000 kilos/year for refugees and 200,000 kilos/year to be exported to Yemen (fresh sardines lose one half of their weight when dried.) Using the existing Djiboutian drying techniques, one hundred and seven trays would be needed to handle this volume resulting in a capital cost of $64,200.

The sardine could be dried in a solar tower containing a stack of 14 trays, each 4 feet by 4 feet with ventilation between trays. Drying time for each tray would be reduced to two days. Each tower would use two solar panels (at $450 each). Total cost of the tower using local material is estimated at $3500; four towers would be needed to process the 356,000 kilos/year as presently demanded for a total cost of $14,000. Thus, based on investment costs alone, drying of the fish using appropriate solar technology will save $50,000 for 356,000 processed kilos/year. It is estimated that total sustained yield of sardines from Djiboutian waters could be as high as 9,000 tons per year. If markets can be developed, the sardine drying industry in Djibouti could increase tenfold. Not only would this be a viable use of solar technology, it would also employ vastly more fishermen and processors.

Possibilities also exist for drying of shark meat (estimated yield of 2 to 3,000 tons per year) and for smoking of fish using solar techniques. The solar panels could be assembled in the workshop set up under this project which would further reduce costs.

Solar Stills

Though there are numerous designs, a solar still generally consists of a black bottomed tray filled with brackish water and covered by a slopping roof of galss or plastic sheet. Sunlight evaporates the water, which condenses on the underside of the transparent cover and trickles down into a trough running along the bottom edge of the cover. Such stills can yield five liters of fresh water per square meter of collector each day. Lifetimes of stills have exceeded 20-30 years with the maintenance and operating costs that are generally very low, depending upon the design and materials used. Potential problems involve removing the dehydrated residue of the feed water, the durability of the clear cover, corrosion and sitting.

Solar distillation units can reportedly be built for between $15-$30 per square meter, which with a capital recovery rate of 10-20 percent annually implies capital costs of $1 to $4 per cubic meter (thousand liters) of water distilled.

Solar stills could have a wide application in Djibouti. Fishing camps along the coast and the islands are constrained due to lack of fresh water. At present, small fishing camps have to be serviced by boats which bring in fresh water. Solar stills would decrease the need for such trips. For example, a small project has been set up on Island of Muscale in the Gulf of Tadjourah for exploitation of a red algae from which a jelling agent is extracted. The project has to be serviced with water every other day from Djibouti. The roundtrip is about 20 kilometers and uses 10 liters of fuel priced at $.74 per liter. In addition, at least two people have to make each trip. The USAID fishing advisor feels that with a solar still, trips to the project would be cut back to about once a week. Thus, a solar still would save this project two roundtrips to the island a week as well as the boatmen's labor. Similar application could be made for trips to other outlying fishing villages.

Photovoltaics

Today's most widely used solar or photovoltaic cells are made of silicon which produce electricity when exposed to the sun. The cells are arranged in arrays and encapsulated for protection. Photovoltaic devices can be extremely rugged and require very little maintenance. The voltage produced is relatively constant while the amperage increases directly with increasing solar insulation.

Applications of solar cells in Djibouti could include pumping water and powering cold stores for the fishing industry in rural areas.

Due to advances in technology and specialty markets, prices of solar cells have fallen from $300 - 5,000/peak watt (Wpk) in the early 1970's to $15 Wpk. The U.S. Department of Energy has estimated that the cost of photovoltaic cells will drop to $9.50 per peak watt by 1985. So-called "balance of system" costs including structural supports, electrical circuitry, batteries and installation presently cost about $15/Wpk for many applications, however, and there is no immediate prospect that the cost of these components will be reduced as rapidly as that of the cells. As the cost of cells declines, the number and variety of economic uses will increase. The cost decrease will be especially important to uses which require lower than average "balance of system" costs. This would include cases such as water pumping where battery storage and much of the electrical equipment can be dispensed with and in cases in which structural support can be integrated into a building or other uses.*

In an October 1980 document, the U.S. Department of Commerce states "photovoltaic" power systems are currently market ready for many uses where moderate amounts of electric power are needed in rural or remote regions. While research and development efforts are continuing in order to further reduce costs and increase efficiency, it is not yet widely understood that photovoltaic systems are now competitive with many smaller conventional system, especially overseas, and are rapidly becoming serious contenders in new market areas. Prices will continue to decrease as sales volume uses. Consequently, substantial expansion of photovoltaic system use may be expected in the next 2-3 years when they are expected to be widely competitive with diesel and gas generators at world oil prices.*

Since the demonstrations of alternate energy technologies will not take place until year three of this project, it is entirely possible that photovoltaic cells will be economically viable at the point in time. If so, demonstration of such devices will be included in the project.

*Source: Prospects for Traditional and Non-conventional Energy Sources in Developing Countries, World Bank Staff Working Paper 346, July 1979.

*Source: Photovoltaic Industry Profile, U.S. Department of Commerce, October 1980.

Windmills

The principal use foreseen for windmills in Djibouti will be for the provision of water to isolated small villages. The economic feasibility of windpower is particularly sensitive to the scale of operations required. Assuming adequate wind regimes and other appropriate site conditions, windpower becomes increasingly attractive as the scale of operations declines. Most demands in rural Djibouti will be to serve small population groups of less than 2000 people. While no site specific analysis has been prepared for Djibouti, the following Kenya analysis is presented for illustrative (applications of the technology will be very similar in both Kenya and Djibouti) purposes. In addition, Kenya will be an eligible supplier to Djibouti and for these reasons it is felt that the Kenya analysis bears application to Djibouti.

It should be noted that the price of diesel fuel in Djibouti is lower than that in Kenya. Djibouti has received assistance in subsidized oil from its Arab brothers but there is no guarantee that this assistance will carry on in the future. For the purposes of an economic analysis, the world price of diesel should be used. Thus the fact that the price of diesel is less in Djibouti than in Kenya does not effect the conclusion of the Kenya example, i.e., that windpower is economically viable.

Kenya Windmill Analysis

Installed costs of windmills vary widely depending upon the make and model, desired storage capacity, etc. Prices for three roughly similar windmills are provided in Table 1. Total water pumping systems costs could be 2-2.5 times this figure. For instance, in a current project in Tanzania using U.S. Dempster Windmills, the total system cost including well, water storage tank, piping, etc. is slightly more than twice the cost of the windmill alone.

TABLE 1
COMPARATIVE CAPITAL COSTS
FOR THREE WINDMILLS

	Delivered Cost (US$)
Dempster - 12 foot (U.S.)	$2,500
Kijito - 12 foot	$4,861 [1]
12 PU 500 (Kenya)	$3,958 [2]

1. KSh 35,000
2. KSh 28,500

Of the two locally manufactured windmill types, the Kijito mill is by far the best known and has been used in this analysis. The twenty-foot Kijito mill is compared with a Lister LTI, one of the smallest diesel pumpsets used in Kenya. Both systems are assumed to serve a water system of 20,000 gallons, which could provide 90 liters of water per day to a population of 1000 people.

Table 2 highlights the fact that capital costs of the Kijito pumping system are almost three times those of the diesel unit. However, the higher recurrent costs of the diesel unit -- fuel, operating labor, and maintenance -- result in lower total system lifetime costs for the wind unit. The costs of both systems meet in the sixth year of operation and thereafter the wind unit is significantly less expensive. Investors typically look for a shorter payback period than eight years. However, while the payback period is long and the discounted return for the incremental investment is low, alternative assumptions regarding fuel price escalation, diesel downtime, etc. could make the windmill appear to be an attractive investment.

Comparison of a windmill and diesel unit providing only 4000 gallons per day or (90 liters per day) to 200 people -- make the windmill look much better. The cost of the smaller Kijito system is only 1.22 times that of the diesel unit, since this size is below the limits at which diesel units can be scaled down easily. Windmill recurrent costs again are much lower than for the diesel unit, and the windmill pays for itself within two years of installation.

This analysis illustrates that the economic feasibility of windpower is particularly sensitive to the scale of operation required. Assuming adequate wind regimes and other appropriate site conditions, windpower will be increasingly attractive as the scale of operation declines. At the same time, since most of the remaining unserved rural population is scattered, it is likely that the typical scale of requirement will decline over time.

It should be noted that the Kijito mill is relatively new, and there are questions regarding its long-term maintenance requirements, useful life, etc. At the same time, for many models it currently is less expensive to import a well-known windmill model of proven reliability from the U.S., Australia, or Argentina. It also is possible, as in Cape Verde, to produce such standard windmill designs in small shops at approximately half the cost of the Kijito or imported windmill It thus appears that there is scope for production of windmills within Kenya which would be competitive with diesel pumpsets over at least the low end of the system capacity range.

TABLE 2

Estimated Capital and Operating Costs
of Small Water Supply Scheme
(20,000 gallons per day)

		Wind powered	Diesel powered
(1)	Windmill	Kshs. 70,000*	
(2)	Diesel engine		Kshs. 13,880*
	Base and pulleys		6,500
(3)	Pump		15,900
	Pump House		1,500
	Pipes	10,000	10,000
(4)	Storage tank	45,000	6,200
	Concrete foundation		500
	Installation	7,500	500
	Transportation	3,000	200
	Total	135,500	55,180

* Prices are inclusive of 15 percent sales tax

(1) Kijito windmill, 20 ft. rotor, Standard 30 ft. tower, MA. 4HP output

(2) Lister LT1, air cooled engine, 2.5-7.0 BHP

(3) Southern Cross, 12" Stroke, HD-F

(4) Recommended storage capacity for a windpumping system is three times daily requirement. In this case it is assumed to be 20,000 gallons per day

II. Essential Recurrent Costs (Kshs. per year)

		Wind powered	Diesel powered
(1)	Fuel		Kshs. 8,256
	Operation and Maintenance	Kshs. 2,080 (2)	8,277 (3)
	Depreciation	7,033 (4)	5,518
	Total	9,113	22,051

(1) At 1500 RPM fuel consumption is .87 liters per hour. The diesel engine is assumed to run 8 hours per day, 365 days per year. The present cost of diesel fuel in Nairobi is Kshs 3.25 per liter.
(2) Estimated at 2 percent of capital costs per year.
(3) Estimated at 15 percent of capital costs per year.
(4) Based on a linear write off of 15 years.
(5) Based on a linear write off of 10 years.

ANNEX C

Threshold Decision based on Initial Environmental Examination

Project Location:	Djibouti
Project Title:	Djibouti Energy
Project Number:	603-0013
Funding:	$4.0 Million ESF
Life of Project:	FY'81-FY'85
IEE Prepared by:	D.E. Dibble
IEE Revised by:	Dr. J. Gaudet, Regional Environmental Officer, REDSO/EA
Environmental Action Recommended:	Negative Determination
Action Requested by:	E.M. Amundson, AID Affairs Officer

Sheldon Cole, for
E.M. Amundson

Bureau Environmental Officer's Concurrence:

Approved: James Gifford

Disapproved: _____

Date: 22 May 1981

Clearance: GC/AFR: ML

Initial Environmental Examination

I. Project Description

The Djibouti Renewable Energy Project will consist of a five-year effort to improve the institutional capabilities of ISERST to perform research in the energy sector, to carry out several demonstrations of renewable energy applications, and on the basis of the results thereof, develop national energy plans and options for presentation to the GROD.

II. Project Components and Discussion of Environmental Impacts

A. Construction

The most important physical compenent of the project will be the construction of a building for the Earth Sciences Section of ISERST This building will be a typical Djiboutian structure but incorporating design features for maximum energy conservation. Care will be taken to assure that it will be environmentally sound. It will be located on vacant ground within the city high enough to assure run-off of water in case of storms and will have its own storm sewerage system. It will also be equipped with normal sanitation facilities such as running water and toilets. The prospective site location will not displace or infringe upon any human habitation nor food production activities.

No significant environmental impacts are foreseen as a result of project building construction.

B. Demonstrations of Solar and Wind Energy

The Project will include six small renewable energy demonstrations using wind and direct solar energy.

1. FISH DRYING AND SMOKING (2 demonstrations)

Two demonstrations will involve drying and smoking of fish. These will merely introduce the use of solar energy to a fish drying experiment that has already been started by the fishing cooperative with the assistance from Catholic Relief Services.

CRS is using the product of this initiative to supplement its present PL-480 refugee feeding program. The fishing cooperative is already the beneficiary of another USAID-funded project aimed at improving the welfare of local fishermen by providing them more appropriate equipment to augment their catch and a marketing outlet

for its sale. There is a full time U.S. advisor on this project who has designed a technically and environmentally sound device for fish drying. It is not contemplated, given the current situation, that the addition of a fish smoking component and the use of solar energy to the process will result in significant environmental effects. If anything, the process due to the inherent control standards required will mitigate against the less sanitary (traditional) methods presently being employed.

2. SOLAR STILL (1 demonstration)

A small project under the auspicies of ISERST has been in place for some time under which red algae is collected on a full-time basis on the island of Moucha where no potable water exists. There are four persons in permanent residence at the site. Drinking water is presently carried to the island from Djibouti on a regular basis by boat. Under this project a solar still would be built and installed on the island. A small demonstration still will be more than adequate to meet potable water requirements.

The only adverse effect this actions might have on the environment is that the availability of water might attract more people (i.e., tourists) to the island. This is not expected to occur, because the production capacity of the still will be closely geared to the needs of the four people collecting red algae, and any other opportunities for economic activities are almost non-existent.

3. WIND-POWERED REFRIGERATION (1 demonstration)

This demonstration would support the establishment on the Red Sea coast (north of the Gulf of Tadjoura), a base with a cold store for the fisheries cooperative. The small cold store would be provided with electrical power by a wind generator. The base would make it possible to exploit the excellent adjacent fishing grounds, which to date has proven difficult for traditional fishermen.

Fish must be refrigerated in this hot climate immediately upon being caught and fishermen must carry with them large quantities of ice for this purpose. A new base near the area in question would permit the fishermen to sell their fish soon after being caught and to take on new supplies of ice. Also the time lost in traveling back to Obock or Djibouti would be saved.

The contemplated demonstration would be sited at an existing settlement. It could result in some small impact on the area since fishermen would come to it to sell their catch and take on ice.

Due to the nature of its size, it is not anticipated that this action will have any deleterious impact on the environment.

4. SOLAR AND WIND-POWERED PUMPING DEMONSTRATION (2 demonstrations)

These demonstrations will be carried out in collaboration with Rural Public Works, i.e. Genie Rural of the Ministry of Agriculture. Genie Rural's role in the country's development is the drilling of wells and establishing of water points throughout the country. Genie Rural develops annual work plans for water exploitation, i.e. funds, equipment, and manpower, in order to bring into production new water points each year. All of the planning and design work is done by Genie Rural in advance of the installation work. The wells are normally powered by diesel electric pumping units.

The Renewable Energy Project will provide a photovolaic and a wind-powered pump as demonstrations for two wells for the production of drinking water. The use of solar and wind-powered pumps will obviously have a positive impact on the environment, through diminished noise and air pollution.

A feasibility study will be carried out prior to locating the well sites and due consideration will be given to local environmental effects. The design of the wellhead will be such as to prevent local transmission of water-bourne diseases, thus little of no secondary impacts are expected.

III. Subprojects

Several smaller subprojects may be identified after project implementation. In each case an environmental review will be made in writing by or for the Regional Environmental Officer prior to authorization and implementation of any individual subproject, in compliance with Regulation 16, Section 216.3(A) (7).

IV. Monitoring and Review

Periodic inspection of the project's 6 demonstration sites and any new subprojects will be made by the Regional Environmental Officer who will review and report on any adverse effects to the Bureau Environmental Officer. The periodic review will also be passed along to ISERST, because one of the stated goals of the project is to establish an evaluation capacity within ISERST to evaluate the prototypes.

V. Recommendation

A negative determination is recommended for the project.

IMPACT IDENTIFICATION AND EVALUATION FORM

Impact Areas and Sub-areas	Impact Identification and Evaluation 1/
A. LAND USE	
1. Changing the character of the land through:	
a. Increasing the population	N
b. Extracting natural resources	N
c. Land clearing	N
d. Changing soil character	N
2. Altering natural defenses	N
3. Foreclosing important uses	N
4. Jeopardizing man or his works	N
B. WATER QUALITY	
1. Physical state of water	N
2. Chemical and biological states	N
3. Ecological balance	N
C. ATMOSPHERIC	
1. Air additives	N
2. Air pollution	N
3. Noise pollution	N
D. NATURAL RESOURCES	
1. Diversion, altered use of water	N
2. Irreversible, inefficient commitments	N
E. CULTURAL	
1. Altering physical symbols	N
2. Dilution of cultural traditions	N
F. SOCIO-ECONOMIC	
1. Changes in economic/employment patterns	L
2. Changes in population	L
3. Changes in cultural patterns	N
G. HEALTH	
1. Changing a natural environment	N
2. Eliminating an ecosystem element	N
3. Other factors:	
Spread of Disease Vectors	N
H. GENERAL	
1. International impacts	N
2. Controversial impacts	

1/ N - No environmental impact
L - Little environmental impact
M - Moderate environmental impact
H - High environmental impact
U - Unknown environmental impact

ANNEX D

Project: Energy Initiatives

Project Number: 603-0013

Date: 22 Mar 1981

LOGICAL FRAMEWORK MATRIX

NARRATIVE SUMMARY	OBJECTIVELY VERIFIABLE INDICATORS	MEANS OF VERIFICATION	IMPORTANT ASSUMPTIONS
Program or Sector Goal: To assist the GROD to reduce that part of the B of P disequilibria caused by the importation of fossil fuels as Djibouti's sole energy source.	1. Up to 50% reduction of fossil fuel imports in real terms by 1990. (constant 1985 prices, GDP and pop growth rate.) 2. Signficant increases in National Investment Budget.	1. National Statistical Bulletin 2. Annual National Budget 3. Ministry records and Balance of Payments records.	1. Government remains committed to active program of substitution of fossil fuels 2. Fossil oil prices continue to rise at present rate or faster.
Sub-goal: To assist the GROD in providing high quality applied research capability in support of the social and economic objectives of the country.	1. Significant increases in number and size of research programs. 2. Improved and closer linkages between ISERST and Directorate of Planning. 3. Increased number of studies supporting Proposed GROD investments.	1. Research Institution reports. 2. GROD records. 3. GROD project documents	1. That adequate human and financial resources can be provided to applied research. 2. That other donors provide sufficient assistance to other areas of applied research.
Project Purpose: To assist GROD in establishing the institutional capacity to collect and organize basic energy information, to direct testing of various energy technologies and to assist in developping policy options concerning production, consumption and conservation.	1. System set up for reporting to government decision makers on energy supply, demand and conservation options. 2. System set up and functioning for contributing inputs to Government on investment and policy options for solar and wind energy.	1. ISERST annual reports to GROD 2. ISERST social/economic data summaries 3. ISERST technological assessments	1. ISERST has the capacity to coordinate solar and wind R and D with its geothermal effort. 2. Government reinforces and supports important role for ISERST in pre-investment studies.

Project: Energy Initiatives

Project Number: 803-0013

LOGICAL FRAMEWORK MATRIX

Date: 22 Mar 81

NARRATIVE SUMMARY	OBJECTIVELY VERIFIABLE INDICATORS	MEANS OF VERIFICATION	IMPORTANT ASSUMPTIONS
Project Purpose (cont'd)	3. System set up and functionning for planning research and development activities over long-term. 4. ISERST will have drafted a planning document for future solar and wind R and D activities by 1986. 5. System set up and functionning for dissemination of ISERST R and D activities. 6. Significant increase in the number of potential user agencies receiving information on ISERST discoveries. 7. Significantly increased number of linkages between ISERST and other international research organisms, especially in field of energy alternatives. 8. Capability within ISERST, especially in field of solar and wind energy, to serve as consultants to GROD executing agencies. 9. Increased bilateral and multi-donor participation and funding of energy substituting programs and projects.	3. Results of Project Evaluations 4. AID Project evaluation summaries. 5. Contractor's periodic reports. 6. GROD planning documents. 7. GROD annual budget submission 8. Other bilateral and multi-lateral evaluation and reporting documents (e.g. UNDP, World Bank, IMF)	3. GROD continues to place important emphasis on fossil fuel energy substitution. 4. International pricing environment concerning fossil fuels continues to encourage substitution 5. GROD has mechanism, in addition to pricing policies, to foster cooperation between ISERST and other GROD agencies. 6. GROD has mechanism, in addition to pricing policies, to hold out promise of eventual commercialization of prototypes which are successful. 7. GROD and international donor pressure for visible interventions prior to proper studies, abates. 8. GROD will remain committed to its rural development and small-scale enterprise strategies.

Project: Energy Initiatives

Project Number: 803-0013

Date: 22 Mar 81

LOGICAL FRAMEWORK MATRIX

NARRATIVE SUMMARY	OBJECTIVELY VERIFIABLE INDICATORS	MEANS OF VERIFICATION	IMPORTANT ASSUMPTIONS
Project Outputs:			
A. Informational and analytical Data Base. Technical Data Base on Wind vel, etc and Radiation Socio-economic needs assessment. Survey of GROD planning priorities	1. Data summaries on liters of water needed, fish to be dried, smoked, etc. 2. Data sheets on Wind velocity, pressure and duration. 3. Data sheets on solar radiation, variance and duration. 4. Data summaries on kilowatts of electricity to be generated, calories of heat per cubi meter persecond, etc 5. Data summaries on liters of water per second and liters of water per day which can be pumped and distributed.	1. Data summary sheets of ISERST Earth Sciences and Energy Section. 2. Socio-economic data survey reports.	1. Timely arrival of measurement equipment. 2. ISERST will receive necessary authorization to carry out surveys and measurements. 3. Other agencies will cooperate. 4. That qualified Djiboutian personnel can be obtained from within and outside ISERST to carry out survey and data processing.
B. Pilot Interventions/ Prototype Research Wind prototype Solar prototypes	1. Windmill water pumps with water production capacity of upt to 512 m 2/day by PY 4. 2. Electric Wind-powered generator with total refrigeration capacity of up to 3 tons/year. 3. Solar stills (four - five) 4. Photovoltaic water pumping with capacity of 1.5 kw.		1. Timely and safe arrival of equipment 2. Prerequisite tests completed on schedule. 3. Counterparts trained on schedule. 4. Cooperating GROD agencies make their own planning schedules available and actively support effort.

Project: Energy Initiatives

Project Number: 803-0013

LOGICAL FRAMEWORK MATRIX

Date: 22 Mar 1981

NARRATIVE SUMMARY	OBJECTIVELY VERIFIABLE INDICATORS	MEANS OF VERIFICATION	IMPORTANT ASSUMPTIONS
Outputs (cont'd)	5. Solar panels for fish-drying. 6. Solar panels for fish-smoking. with Smoke tower 7. Additional appropriate prototypes to be identified by the project technicians.	1. Contractor's progress reports. 2. USAID Evaluations. 3. USAID's reports 4. ISERST's reports to the Presidency.	5. Unforeseen damage does not occur to prototypes.
C. Assessment and Dissemination of Research Results.	Technical, economic, financial and social assessment studies completed by PY 2.		
D. Energy Conservation Practices.	1. Initial studies on possible conservation practices by PY 4. 2. Functionning Local Building materials research capability which has component for energy conserving materials for construction.		
E. Policy and Planning Recommendations to Government	Final Report to GROD on ISERST's activities, and policy and planning recommendations by end of 1986		

Project: Energy Initiatives

Project Number: 803-0013

Date: 17 Apr 81

LOGICAL FRAMEWORK MATRIX

NARRATIVE SUMMARY	OBJECTIVELY VERIFIABLE INDICATORS FY (000)					MEANS OF VERIFICATION	IMPORTANT ASSUMPTIONS
INPUTS:	82	83	84	85	86		
AID						1. Project agreement.	Project authorized.
Technical assistance (780) Long term (4.5 py) Short term (13.5 pm)	124	152	164	164	176	2. Request for Technical proposal and contracts.	
Commodities (862) Project vehicles Lab/workshop equipment Office equip./suppl./publ. Wind/solar measurements Prototype equipment	292	29	523	9	9	3. Bid documents. 4. Plans and specifications.	
Construction (820)	820						
Training (35)	10	10			15		
Other costs (409) O&M for vehicles Temporary personnel (local) Miscellaneous	56	71	94	94	94		
Evaluation (35)			15		20		
Contingency and inflation (655)	138	65	337	166	273		
Total (4000)	1506	289	1235	378	542		

Project: Energy Initiatives

Project Number: 803-0013

LOGICAL FRAMEWORK MATRIX

Date: 17 Apr 81

NARRATIVE SUMMARY	OBJECTIVELY VERIFIABLE INDICATORS FY (000)					MEANS OF VERIFICATION	IMPORTANT ASSUMPTIONS
INPUTS: (continued)	82	83	84	85	86		
GROD							
Land procurement/clearing (400)	400						
Construction (425)	425						
Commodities (50)	28	7	6	5	4		
Personnel (160)	27	28	35	35	36		
Other costs (80)	15	15	15	15	15		
Inflation and contingency (235)	31	134	31	23	16		
Total (1350)							
Total Project Cost (5300)							

ANNEX E

DRAFT SCOPE OF WORK FOR TECHNICAL ASSISTANCE

A. Scope of Work

The overall objective towards which the Technical Service contribute is:

To develop a Djibouti institutional capacity to (a) collect and organize basic energy information (b) direct testing of various alternative energy technologies, (c) assist in developing policy options concerning energy production, consumption and conservation and (d) facilities transmission of the research results to potential public and private users. Description:

The project will be implemented within the National Institute of Scientific and Technological Research (ISERST) located within the Office of the Presidency. Within ISERST, the project will be assigned to the Division of Earth Sciences and Energy.

The project will have two thrusts. Firstly, the project will assist the GROD, most likely through a to-be-established National Energy Commission, to undertake in collaboration with ISERST, basic studies to develop data upon which to develop anational program of energy production, consumption patterns, and conservation; secondly, the development and evaluation of alternative energy technologies to figure in the formulation of priorities concerning a national energy plan. In light of the organizational problems involved and the lack of background in energy planning in Djibouti, the initial studies/ planning phase of the project will require important and innovative, limited technical assistance. The major thrust of the technical assistance component will be concentrated on the ensuing applied research component in-solar and wind development and, to a lesser degree, conservation.

The project concentrates on the development of suitable prototypes of renewable energy devices under a variety of circumstances to be found in Djibouti. It involves an operational research approach for the integration of the technologies developed into the systems of needs, uses and practices of the target populations. This involves testing the prototype in the field, monitoring their performance, and evaluating them in light of their cost effectiveness as a means of replacing any alternative energy sources. This implies careful evaluation of maintenance requirements in view of the remoteness of possible sites, and the general lack of skilled or trainable manpower, and budget constraints.

A component of the technical assistance will be the Architectural Engineering design, and preparation of plans for an 800 m^2 wing of the Earth Sciences Division of Djibouti National Institute of Research. The importance of these designs is that they will be among the first buildings in Djibouti to be constructed with significant energy conservation in mind.

The contractor's duties (working with their Djibouti counterparts) include:

1. Plan and implement a data collection program addressing general energy needs and alternative energy potentials to allow further work in a comprehensive energy problem.

   a. Plan and implement a data collection program on quantities of energy resources in Djibouti;

   b. Plan and implement a program identifying appropriate conversion technologies for energy resources into usable energy forms;

   c. Plan and implement a program for determining socio-economic energy needs and corresponding quantities of energy needed to meet such needs;

   d. Plan and implement a program for identifying appropriate energy end use technologies in terms of their efficiency in meeting the established needs most efficient pumping, distribution, etc.

2. Review the project's currently proposed prototype interventions and propose any modifications and changes appropriate to the objectives of the project.

3. Review the project's currently proposed implementation timetable, advise on possibilities for any acceleration and identify possible more immediate prototype introduction.

4. Plan and implement a program of prototype use for pilot interventions.

   a. Plan and execute a training program within ISERST for all workshop personnel to develop basic skills in reading drawings and transforming such drawings into functioning equipment;

   b. Plan and implement a program for designing, fabricating, and assembling prototypes;

   c. Plan and implement a cost-effective program of monitoring and maintaining prototype equipment using available Djiboutian personnel;

d. Identify, design and install additional alternative energy prototypes which present potential for further wide-spread use within Djibouti.

5. Plan and implement a program of continuing assessment of the prototype use program which will serve as the basis for determining which devices are suitable for commercialization or wide-spread use within Djibouti. This will be done from both a technical, and socio-economic point of view.

6. Plan and implement an introductory program of energy conservation in Djibouti aiming at saving energy inter alia in space cooling, present and future industrial and rural development practices, and building design and construction. This will include support to the newly created local building materials research program.

7. Prepare a final report to the Government of Djibouti, which can serve as a basis for a national energy program and which will describe the complementary role of Djibouti's newly established solar and wind capability vis-a-vis thermal and geothermal energy as well as possible direction to follow on a national energy conservation strategy.

8. Undertake all requirements for the design of, and preparation of plans for an energy-conserving 800 m^2 building for the National Research Institute, the specifications of which are included as annexes. To achieve energy conservation in this new building, one must combine architectural designs with solar protection, insulation, ventilation and space cooling requirements with consideration to local building materials and building skills. In selecting proper building materials, HVAC systems, and lighting it shall be assured that all openings and passages for air, as well as lighting and controls for HVAC are well designed and properly located.

JOB DESCRIPTION OF TECHNICAL ASSISTANCE COMPONENT (EXCLUDING A AND E SERVICES) MECHANICAL/ELECTRICAL ENGINEER

1. Subject to the general supervision of the Director of ISERST, and in collaboration with his Djiboutian counterpart, this person will serve as the chief of project during implementation of the entire project.

2. For the construction of the ISERST building, he will assist the A/E and AID engineers, in reviewing the architectural, structural, mechanical, electrical drawings, and specifications, preparation and release of bidding documents, review of submittals and selection of contractor , and verify that materials used and work quality are in accordance with specifications and drawings.

3. He will establish a work plan together with his Djiboutian counterpart, for wind and solar measuring equipment installation, collecting and processing solar and wind data; and procedures for testing of building materials in the laboratory. Also he will provide plans for prototype fabrication and installation, energy assessment, energy conservation, work with short term-technician and socio-economist in preparing policy recommendations to the government, on energy utilization and conservation.

4. As project manager, he will be responsible for providing all necessary support to short term technical assistance. This includes logistics, reviewing scope of work, work plans, etc, listing commodities, be responsible for drafting final equipment lists for the laboratory and schedule the budget for purchase of materials for the prototypes. Assist in designing and installation of cold storage room with wind generator, stand-by generator and refrigeration unit, fish drying and smoking tower with solar panels. List and procure books and magazines on renewable energy for the ISERST library.

5. The engineer will also present to USAID a detailed program of activities in the physical laboratory and in the workshop. The program will include detailed sequence of all testing and recording procedures.

6. Organize the exchange of research results with other Djiboutian, African and international organizations involved in agriculture and rural development.

7. Play role in task of transforming the research results into recommendation for use of prototypes in commercial and industrial application. Serve as consultant for energy conservation.

8. Support and devise new prototypes, along lines which address needs of local requirements, encourage more efficient building design, and recognize local materials with good thermal insulation property and strength for building construction.

QUALIFICATIONS

Education:

(a) Advanced degree in mechnical engineering
(b) Advanced degree or equivalent in electrical engineering

Experience:

Minumum seven years in mechanical engineering, particularly in design and manufacturing of sheet metal components.

The candidate shall have background in the following areas:

(a) Good knowledge in physics
(b) Specifying and installing equipment for institutional sheet metal fabrication shop.
(c) Theoretical knowledge and experience in maintenance for diesel-powered and internal combustion electric generator and pumps.
(d) Maintenance, installation and repair of windmill electric generator and refrigeration unit, and windmill pump.
(e) Professional familiarity with wind, photovoltaic, solar collectors and practical application of renewable energy devices.
(f) Writing preventive maintenance manuals.
(g) Theoretical knowledge in geothermal energy.
(h) Preparing curriculum for on the job training.
(i) General knowledge in HVAC operation and electrical control system.
(j) Must have knowledge of French at FSE R-3 and S-3 level.

JOB DESCRIPTION SOCIO-ECONOMIST

1. The economist will be subject to the supervision of the Chief of Project and will collaborate with ISERST counterpart.

2. Will plan the methodology for the socio-economic energy needs survey to include utilization of ISERST staff to:

- design of survey purposes and study objectives
- provision for pre-survey documentary research
- determination of study hypothesis later to be proved design of questionnaire/code book.
- sampling frame and size procedures and units of analysis
- questionnaire pre-testing
- Enumerator and supervisor training on proper procedures for data collection and transcription
- logistics, field supervision and administration procedures
- data processing procedures (hardware and software)
- analytical framework for final report

3. Will undertake analysis and report on socio-economic data findings, in close cooperation with ISERST staff.

4. Will assist the Engineer/Chief of Project on physical wind and solar data collection by providing advice on data format and processing procedures.

5. Obtain base line technical and socio-economic data relevant to installation of prototypes on site.

6. Design instruments such as questionnaires and observation forms and diary entries that will be filled out during the period of demonstration on appropriate data.

7. In close cooperation with ISERST counterpart, subject to final review from Engineer/Chief of Project, prepare final prototype demonstration assessments.

8. Assist Engineer/Chief of Project in design of data collection and observation instruments for energy audits of buildings and industrial processes for the energy conservation element of the project.

9. Assist ISERST in preparation of final energy planning and policy recommendations to Government for their economic development plan. Such a report will include a micro and macro energy/economic analysis of renewable energy needs, uses and resources, technology assessments, proposed conservation measures and finally projections for future demand supply.

Education:

Masters degree in economics with emphasis on natural resource policy analysis and social science research methodology.

Experience:

Minimum of three years in undertaking energy survey, inventories and assessments and in macro-economic planning.

Minimum of two years experience of previous work in developing countries, preferably Africa.

S-3, R-3 FSI level in French.

JOB DESCRIPTION ARCHITECT

1. Subject to the general supervision of the Director of ISERST and the Engineer/Chief of Project and in collaboration with the Economist, the architect will contribute to policy recommendations to the Government on building design for energy conservation and comfort of the using people.

2. The architect will study forms and materials of existing buildings in undertaking energy audits in buildings.

3. With the Director of ISERST and the Chief of Project, the architect will investigate possibilities of using local materials in building construction, and propose possible modifications to existing buildings. In addition this specialist will propose typical geometrical forms, using local materials, for new building construction in order to achieve better living comfort and conservation of energy.

Education

Graduate architectural degree and professionally licensed.

Experience

To have at least 10 years experience in residential,commercial and industrial building design, preferably with experience and/or education in tropical-desert architecture.

Annex F

DETAILED LIST OF MEASURING EQUIPMENT FOR WIND, SOLAR RADIATION, TEMPERATURE AND PRECIPITATION

Electrical Characteristics:

For Main Station (in Djibouti) 220V 50HZ and solar photovoltaic panel
For Remote Stations 12V DC and Solar Photovoltaic Panel
All Equipment should be in Metric System

Suggested Vendors:

Climatronics Corporation
140 Wilbur Place
Bohemia, New York 11716

Campbell Scientific, Inc.
P.O. Box 551
Logan, Utah 84321

All Equipment Listed from Climatronics Corporation Catalogue is to Indicate Type Desired and should be Procured on a "Or Equal Basis".

MAIN WEATHER STATION (DJIBOUTI CITY)

Vendor: Climatronics

Item	Part No.	Description	Quantity	Unit Price	Total Price
1.	P/N 100108	Wind Mark III (WM-III) Wind speed and direction sensors, includes crossarm, stainless steel cups and vane. Wind Speed: Accuracy .11 m/s <5 m/s ± 1.5% 2.5 cm/s Range .25 - .51 m/s .35 to 45 m/s Distance Constant 2.5 m Threshold .35 m/s Wind Direction: Accuracy ± 3% Range 0 - 5400 Distance Constant max. 2.5 m Damping Ratio 0.4 - 0.6 Threshold max. .35 m/s	one	475	475
2.	P/N 100161	WM-III Wind speed (0-25 m/s) and Direction (0-540°) Translator	one	325	325
3.	P/N 100586	Multiplex pressure type strip chart recorder with environmental case, completely solid state, crystal controlled chart drive, chart operation 25.4 cm/hour, (12.7 cm and 6.35 cm/hour gears operation).	one	750	750
4.	P/N 101009	IMP-803 microprocessor based cassette system. Programmable Cassette data, 16 input channels scan/averaging interval (10-3600 sec.) with memory, keyboard and environmental case.	one	4,500	4,500

Item	Part No.	Description	Quantity	Unit Price	Total Price
5.	P/N 100243	Environmental case assembly, including, but not limited to; internal wiring, interface electronics, AC/DC converter, space for strip recorder and batteries storage, and necessary cables.	one	1,500	1,500
6.	P/N 100255	Sensors carrying case.	one	125	125
7.	C-33	10 meter free standing tower, of entruded aluminum with protective coating, triangular design with hinged base.	one	350	350
8.	P/N 100928	Full height grounding, consisting of lightning rod, copper cable and ground rod.	one	125	125
9.	P/N 100800-2	Solar photovoltaic panel, with solid state controls and rechargeable batteries. The system shall be capable to maintain the station in operation for at least eight days without solar radiation.	one	500	500
10.	P/N 100675	Tower mount of aluminum construction.	one	50	50
11.	P/N 100093	Temperature Sensor (dual element thermistor) for measuring ambient and differential temperatures. When used with aspirated shield, its accuracy is $\pm$ 0.2^{o}C. Range -30° to +50°C; time constant 10 seconds.	one	85	85
12.	P/N 100552	Naturally Aspirated Temperature Shield	one	75	75
13.	P/N 100098	Relative Humidity Sensor, Strain Gauge	one	440	440
14.	P/N 100507	Solar Radiation Sensor, Photovoltaic Pyranometer - silicon photo cell as sensing element measuring total radiation, accuracy $\pm$ 5%; linearity $\pm$5%, 0-2 langley; respond time 3 seconds.	one	250	250

Item	Part No.	Description	Quantity	Unit Price	Total Price
15.	P/N 100508	Precipitation Gage, .15m collection diameter with heater; accuracy ±1%; range up to 75 mm/hour; resolution .25 mm event.	one	225	225
16.	P/N 100087	Temperature Translator, to be used with Part No. 100093 Temperature Sensor series, range -30 to +50°C.	one	250	250
17.	P/N 100224	Relative Humidity Translator (0-100%)	one	250	250
18.	P/N 100144	Solar Radiation Translator (0-2 langleys), to be used with Part No. 100507 Photovoltaic Pyranometer	one	275	275
19.	P/N 100747	Precipitation Integerating Translator (0-25mm), to be used with Part No. 100508 Precipitation Gage.	one	275	275
20.	P/N 100247	Wind Speed Translator	one } price included		
21.	P/N 100248	Wind Direction Translator	one } in P/N 100161		
22.	P/N 100081	Mainframe Assembly, rack mountable (5¼ - by 19-inch), houses up to six translators and power supply.	one	300	300
23.	P/N 100074-2	Power Supply, ±12VDC (220V, 50 Hz AC Input)	one	350	350
24.	P/N 100958	Calibration Oscillator	one	50	50
25.	P/N B-24	AC Surge Protection	one	175	175
26.	P/N M-120	Signal Line Surge Protection	one	300	300
			Sub Total		$12,000
			Reserve		
			Total		

REMOTE WEATHER STATION

Vendor: Climatronics

Item	Part No.	Description	Quantity	Unit Price	Total Price
1.	P/N 100108	Wind Mark III (WM-III) Wind speed and direction sensors, includes crossarm, stainless steel cups and vane. Wind Speed: Accuracy .11 m/s <5 m/s ± 1.5% 2.5 cm/s Range .25 - .51 m/s .35 to 45 m/s Distance Constant 2.5 m Threshold .35 m/s Wind Direction: Accuracy ±3% Range 0 - 5400 Distance Constant max. 2.5 m Damping Ratio 0.4 - 0.6 Threshold max. .35 m/s	one	475	475
2.	P/N 100586	Multiplex pressure type strip chart recorder with environmental case, completely solid state, crystal controlled chart drive, chart operation 25,4 cm/hour, (12.7 cm and 6.35 cm/hour gears operation).	one	750	750
3.	P/N 101009	IMP-803 microprocessor based cassette system. Programmable Cassette data, 16 input channels scan/averaging interval (10-3600 sec.) with memory, keyboard and environmental case.	one	4,500	4,500
4.	P/N 100851	Solar radiation translator	one	125	125

Item	Part No.	Description	Quantity	Unit Price	Total Price
5.	P/N 100243	Environmental case assembly, including, but not limited to; internal wiring, interface electronics, AC/DC converter, space for strip recorder and batteries storage, and necessary cables.	one	1,500	1,500
6.	P/N 100255	Sensors carrying case.	one	125	125
7.	C-33	10 meter free standing tower, of entruded aluminum with protective coating, triangular design with hinged base.	one	350	350
8.	P/N 100928	Full height grounding, consisting of lightning rod, copper cable and ground rod.	one	125	125
9.	P/N 100800-2	Solar photovoltaic panel, with solid state controls and rechargeable batteries. The system shall be capable to maintain the station in operation for at least eight days without solar radiation.	one	500	500
10.	P/N 100093	Temperature Sensor (dual element thermistor) for measuring ambient and differential temperatures. When used with aspirated shield, its accuracy is $\pm 0.2^{o}C$. Range -30° to $+50^{o}C$; time constant 10 seconds.	one	85	85
11.	P/N 100552	Naturally Aspirated Temperature Shield	one	75	75
12.	P/N 100507	Solar Radiation Sensor, Photovoltaic Pyranometer - silicon photo cell as sensing element measuring total radiation, accuracy $\pm 5\%$; linearity $\pm 5\%$, 0-2 langley; respond time 3 seconds.	one	250	250
13.	P/N 100247	Wind Speed Translator	one	125	125
14.	P/N 100248	Wind Direction Translator	one	125	125
15.	P/N B-24	AC Surge Protection	one	175	175
			Sub Total		$ 9,160
			Reserve		
			Total		

MISSING PAGE NO. ANNEX F - Pg 3

Annex F

Main Weather Station		$12,000
Remote Weather Stations	$9,160 x 3	27,480
	Sub Total	$39,480
	Reserve	15,520
	TOTAL	$55,000

Annex F

DETAILED LIST OF LABORATORY

EQUIPMENT FOR PHYSICAL LABORATORY

Electrical Characteristics:

All measuring devices and scales should be in metric system.

Suggested Vendors:

Brodhead-Garrett
4560 East 71st Street
Cleveland, OH 44105

American Scientific Products
3201 E. Royalton Road
Broadview Heights, Ohio 44147

All equipment and instruments from Brodhead-Garrett and American Scientific Products catalogues are to indicate type desired and should be procured on a "Or Equal Basis".

PHYSICAL LABORATORY - EQUIPMENT LIST

Suggested Vendor: Brodhead-Garrett
4560 East 71st Street
Cleveland, Ohio 44105

Catalogue:
50th Edition
November 19, 1979

Item	Page	Cat. No.	Description	Quantity	Unit Price	Total Price
1.	524	179242	Universal Testing Machine with accessories, model UTM-3B1 includes universal testing machine, model UTM-2B1 & UTM-BA Basic Assessories package.	one	2,695.00	2,695.00
2.	829	180160	Portable Concrete Testing Machine, Model C-CP-250-B9-BA-G2 (bottom acting) -- dual range 0-30,000 lbs., and 0-250,000 lbs., two adjustable dial hydraulic gages, manual.	one	5,700.00	5,700.00
3.	829		Concrete Testing Accessories for the above machine: includes upper and lower platens, fixtures for cubes, compression & rupture of brick, platen assembly for cubes, cardboard cylinder molds, permanent cylinder molds, and masonry saws.	one	3,000.00	3,000.00
4.	383	204487	Electric furnace chamber, dimension 24 cm x 34 cm top loader balance	one	980.00	980.00
5.	657	400830	Extra heavy, rugged mechanism precision calibrated spring and dial	one	31.00	31.00
6.			Miscellaneous banches and cabinets including fumehood			8,500.00
				Sub Total		$20,906.00

PHYSICAL LABORATORY - EQUIPMENT LIST

Vendor: American Scientific Products
3201 E. Royalton Road
Broadview Heights, Ohio 44147

Catalogue: 1981-1982

Item	Page	Cat. No.	Description	Quantity	Unit Price	Total Price
1.	903	S6011-1	Spectrophotometer, 20, voltage regulated. Wavelengh Range - 340 to 950 nm Bandwidth - 20 nm Wavelength - accuracy better than 2.5 nm, readability 1 nm Photometric accuracy - better than 2% T Dimensions - 16¼ w, 8¼ h, 13"d Complete with accessory output to external readout, twelve ½" test tubes, ½" adapter, reference manual, dust cover.	one	744.00	744.00
2.	389	D4800-4	Water still, Mega pure, provides high quality water from an all glass and teflon distillation system, non-automatic. Output to 3.4 litres per hour. Dimensions 23"L x 12"D x 45"H	one	1,186.00	1,186.00
3.	849	R4040-2	Laboratory Refrigerator, model 812 VC, precision, includes freezer capacity = .18 cu. meter weight = 55 kg.	one	671.00	671.00
4.	538	H5792-1A	PH Meter, model 601A Digital meter 1.5 cm high, 7 - segment LED display. Steel case. Complete with H5820-4 Lab. grade combination PH electrode & instruction, manual. Dimension: 33W x 18D x 9 cm H	one	761.00	761.00

Item	Page	Cat. No.	Description	Quantity	Unit Price	Total Price
5.	352	C8670	Wiley Laboratory Mill, intermetiate continuous duty ¼ HP motor on substantial cast iron base with rubber feet. Complete with stainless steel hopper with cover, wooden plunger, 3 delivery tubes with monel metal sieve tops of 20, 40 and 60 mesh, and other tools and accessories. Polished chamber 40 mm dia x 22 mm deep; rotor with 4 cutting edges.	one	750.00	750.00
6.	333	C6540	Universal Electric Timer, 60 minutes timer, incremented in minutes with indication of seconds, 20 cm diameter scale.	one	54.00	54.00
7.	65	B2045-15	Weight Boat Container, large liquid liquid capacity 250 ml. For liquid and solid balance samples.	one pkg. (500)	40.00	40.00
8.	69	B2650-50	Griffin Beaker, graduated, Pyrex Brand. Capacity 50 ml; range 10-40 ml	one pkg. (12)	14.00	14.00
9.	"	B2650-150	Same -- capacity 150 ml	one pkg (12)	14.00	14.00
10.	"	B2650-250	Same -- capacity 250 ml	one pkg (12)	14.00	14.00
11.	"	B2650-600	Same -- capacity 600 m.	one pkg (6)	10.00	10.00

Annex F

Item	Page	Cat. No.	Description	Quantity	Unit Price	Total Price
12.	72	B2730-50	Griffin Plastic Beaker, capacity 50 ml	one pkg. (12)	5.00	5.00
	72	B2730-150	- Same - capacity 150 ml	one pkg. (12)	7.00	7.00
	72	B2730-250	- Same - capacity 250 ml	one pkg. (6)	7.00	7.00
	72	B2730-600	- Same - capacity 600 ml	one pkg. (4)	10.00	10.00
13.	212	B7556-5X	Plastic Bottle, carboy, capacity 20 litres	one	26.00	26.00
14.	224	B7893-250	Plastic Wide Mouth Wash Bottle - capacity 250 ml	one pkg. (6)	8.00	8.00
		B7893-500	-Same- capacity 500 ml	one pkg. (6)	10.00	10.00
15.	227	B8600	Brush, Beaker, double Tufted end	two	3.00	6.00
16.	228	B8690-2	Brush volumetric Flask, Flask capacity 500 ml brush length 10 cm	one	3.00	3.00
17.	325	C6286-1	S/P Laboratory Detergent phosphate free	one	11.00	11.00
18.	329	C6405-5	Towels, disposable, kaydry virtually lint-free, nonscratching wipers for scienfitic and electronic equipment	4 pkg.	3.64	15.00
19.	359	C9040-100	Cylinder, graduated, single scale capacity - 100 ml; subdivision 1 ml height 255 mm	1 pkg. (2)	20.00	20.00
20.	359	C9040-500	- Same - capacity 500 ml subdivision 5 ml; height 375 mm	1 pkg. (1)	12.00	12.00
21.	359	C9040-1L	- Same - capacity 1000 ml subdivision 10 ml; height 460 mm	1 pkg. (1)	17.00	17.00

Item	Page	Cat. No.	Description	Quantity	Unit Price	Total Price
22.	366	D1425-1	Desiccator, solid cover, Pyrex brand, Corning Manufacturers No. 3080200; size large; inside dia flange 200 mm; height 300 mm	1 case (1)	83.00	83.00
23.	412	D8156	Drying agent, indicating, impregnated with C.P. cobalt chloride; natural blue color turns rose-red to show moisture absorption	5 lbs.	18.00	18.00
24.	422	F2410	Filter paper, Whatman #1 suffix No. 55; size 5.5 cm, for general laboratory filtrations and qualitative analysis	10 pkg. (100 per pkg.)	1.10	11.00
25.	462	F4250-125	Flask, Erlenmeyer, narrow mouth, graduated, Pyrex brand, capacity 125 ml; stopper No. 5	1 pkg.(12)	15.00	15.00
26.	467	F4646-100A	Volumetric flask; capacity 100 ml limit of error ±0.16 m.; stopper size 13	1 pkg. (6)	48.00	48.00
27.	467	F4646-1L	Volumetric flask; capacity 1000 ml limit of error ±0.60 ml; stopper size 22	1 pkg. (1)	16.00	16.00
28.	473	F7200-2	Funnel, short stem dia 45 mm; stem length 50 mm	1 pkg. (6)	12.00	12.00
29.	507	G7221-5	Gloves, mfr. No. 8851, medium size	1 pkg. (50)	6.00	6.00
30.	507	G7221-6	Gloves, mfr. No. 8852, large size	1 pkg. (50)	6.00	6.00
31.	773	P4140-5	Pipet, volumetric, capacity 5 ml limit of error ±0.020 ml; white coding band	1 case (12)	27.00	27.00
32.	773	P4140-25	Pipet; capacity 25 ml, limit of error ±0.060 ml; blue coding band	1 case (12)	40.00	40.00
33.	773	P4140-50	Pipet; capacity 50 ml, limit of error ±0.100 ml; red coding band	1 case (12)	43.00	43.00
				Sub Total		$4740.00

Annex F

Brodhead-Garrett	Sub Total:	$20,906.00
American Scientific Product	Sub Total:	4,740.00
	Sub Total:	$25,646.00
	Reserve:	8,854.00
	TOTAL	$34,500.00

Annex F

DETAILED LIST OF DRAFTING TOOLS AND WORKSHOP EQUIPMENT

Electrical Characteristics:

All electrical components should be 220V, 50 Hz

All measuring devices and scales should be in metric system

Suggested Vendor:

Brodhead-Garrett
4560 East 71st Street
Cleveland, Ohio 44105

All Equipment listed from Brodhead-Garrett catalogue is to indicate type desired and should be procured on a "Or Equal Basis".

WORKSHOP EQUIPMENT LIST

Suggested Vendor:

Brodhead-Garrett
4560 East 71st Street
Cleveland, Ohio 44105

Catalogue:
50th Edition
November 19, 1979

Item	Page	Cat. No.	Description	Quantity	Unit Price	Total Price
1.	100	466041	Worker Drafting Table, Model WD200-RA, size 48" W x 14" D includes Fiberesin top 13/16" thick, 1 bookshelf, 1 student shelf	two	359.00	718.00
2.	126	468756	Adjustable chair for high or low work levels Model 4D61; top of seat adjustment 20"-28"; top of footring above floor 6½"	two	93.00	186.00
3.	910	451550	Draftsman I Kit carries drafting tools beyond customary drawing instruments	one	62.00	62.00
4.	910	451052	Draftsman II Kit includes rapidograph pen, black ink, rapidograph adapter, blutex, vellum pad, etc.	one	86.00	86.00
5.	116	465473	Blueprint and Paper Cabinet Model BC-170 MT, offers 7 large pull out shelves; size 47" wide x 34 3/4" high x 29" deep, Top 1½" thick plywood overall bench height 36¼"	one	656.00	656.00
6.	933	455305	Print Reproduction Machine, Model 1K42 42" white printer	one	775.00	775.00
7.	949	123518	ABC of Drafting - Transparencies complete series of 36 multicolored Transparencies with 20 overlays and instructor's Guide	one	175.00	175.00
8.	914	486987	VEMCO Standard Drafting Machine 22" arm; board coverage 38" x 50"	one	139.00	139.00

Item	Page	Cat. No.	GENERAL WORKSHOP	Quantity	Unit Price	Total Price
9.	344	437162	Foot Squaring Shear, PEXTO Model 137; cutting length 36"; length 45", height 40", width F-B less gauges 27", and with gauges 76".	one	1,836.00	1,836.00
10.	344	437224	Box and Pan Brake with stand Model Px-36; bending length 36"; length 48", height 14", width F-B 29", stand height 28", stand top 16" x 49".	one	2,331.00	2,331.00
11.	29	457556	Sheet Metal Bench Model SM-89-S with 1 stake plate size: 96" long, 40" deep, 33¼" high	one	975.00	975.00
12.	348		Steel Stakes - PEXTO			
		197696	Beakhorn, 38", Part No. 901	one	373.00	373.00
13.		197714	Grooving stake 19", Part No. 922	one	136.00	136.00
14.	348	197619	Cast Stake, Hollow Mandrel 40", Part No. 910	one	320.00	320.00
15.	349	349809	671105 Ball Head Stake 3" dia.	one	88.00	88.00
16.		350325	671141 Square Head 2" x 2"	one	31.00	31.00
17.		350855	671143 Saddle Head 3 1/8" x 2"	one	31.00	31.00
18.		352225	671149 Deep Round Head, 2" dia.	one	31.00	31.00
19.		352258	671450 Blowhorn Stake 19½" long.	one	160.00	160.00
20.	344	437385	Adjustable Bar Folder with Stand PEXTO, Model 63, Folding length 30", length 42", height 7", width 26"; stand length 39", stand height 32", stand width 14".	one	1,500.00	1,500.00

Item	Page	Cat. No.	GENERAL WORKSHOP	Quantity	Unit Price	Total Price
21.	345	197240	Combination Rotary Machine PEXTO Model 622, capacity crimping only 26", depth of throat to frame 7", distance between shaft centers 2"	one	592.00	592.00
22.	355	199446	Universal Bender, No. 1 Package includes Hossfeld pipe & bar bender, Bulldozer type die, angle iron attachment, wrap around tube die set, scroll die, edgebend die, and cabinet stand with five storage shelves.	one	836.00	836.00
23.	356	457925	No. 5172 Combination Vise and Stand	one	92.00	92.00
24.	362	201306	Journeyman Welding Outfit, includes welding torch, nozzles, cutting attachment, hose, goggles and lighter.	one	373.00	373.00
25.	371	158722	AC/DC Arc Welder Model 901-564, dialare 250 AC/DC, rated welding current 250 Amps, 30 volts, 11.8 KW; 200 amps, 28 volts, 8.2 KW.	one	699.00	699.00
26.	371	161160	Accessory kit for Welders No. 004-042 No. 2-CWA, includes 35 ft. of No. 2 electrode cable with insulated electrode holder, 30 ft. of No. 2 ground cable, ground clamp, welding helmet, wire scratch brush, etc.	one	98.00	98.00
27.	377	484791	Tweco Tongs, Model A-732, 300 amps	one	12.00	12.00
28.	378	261740	Welder's Cup Goggles with blue or gold coated shade #5.	one	4.00	4.00
29.	376	202990	Harper Cylinder Truck Front and Back Load. Truck No. 810-60, 10" x 1.75" semi-pneumatic tires, width 16½".	one	83.00	83.00

Item	Page	Cat. No.	GENERAL WORKSHOP	Quantity	Unit Price	Total Price
30.	815	434025	Glass Cutter - straight end No. 01	one	2.00	2.00
31.		434036	Glass Cutter - ball end No. 02	one	2.00	2.00
32.		434047	Replacement Wheel for Cutters above	two	2.00	4.00
33.		434070	Circle Cutter No. 42	one	21.00	21.00
34.		434080	Replacement wheel for above	one	2.00	2.00
35.		434131	Glass Pliers No. 78 Flaring jaw, 7/8" wide	one	33.00	33.00
36.		257063	Putty Knife - elastic blade, No. 2-E	one	3.00	3.00
37.		218323	Glass drill, spear point 1904, ¼" dia.	one	16.00	16.00
38.	72	451304	Tool Storage Cabinet for wood, metal, electricity and power technology, model TS-400-TM, Tools & Cabinet	one	3,816.00	3,816.00
39.	5	452055	All Purpose Bench, model ML4-4V, bench with 4 vises	one	989.00	989.00
40.	228	110323	Complete 12" Radial Saw Bench, model with motor and controls, factory mounted and wired. Single phase 1½ H.P., 115/230 volts, 60 Hz, on-off key-lock switch and overload protection, No. 33-790	one	748.00	748.00
41.	777	198538	Block Plane, screw adjustment, fully adjustable, length 6" cutter width 1 5/8".	one	16.00	16.00
42.	243	013762	17" Drill Press, single phase, 115V or 230V	one	1,985.00	1,985.00
43.	718	443336	Belt Sander, model 362, type H-D, motor amps 10.5, belt size 4x24 inches, No.load speed 1500 SFM, belt and gear drive, weight 15.25 lbs.	one	255.00	255.00

Item	Page	Cat. No.	GENERAL WORKSHOP	Quantity	Unit Price	Total Price
44.	715	199468	Portable Electric Band Saws, includes basic machine, blade, blade wax, and an operating manual. Model 7721, 21½", 4.5-6.5 amps, 195-245 S.F.M.P. speed; stock capacities, rect. 3½"x 4½", round 3½" dia.	one	289.00	289.00
45.	716	438640	Portable Electric Drill, model 632, type HD, capacity steel ½", and wood 1½", motor amps 6, chuck size ½", speed 600 RPM, wt. 7 lbs.	one	150.00	150.00
46	733	478277	Dial caliper	one	95.00	95.00
47.	752	579457	Stanley tape rule	one	13.00	13.00
48.	750	428823	Stanley level	one	7.00	7.00
49.	751	133178	Stanley square	one	9.00	9.00
50.	749	200285	Pipe and duct snips	one	12.00	12.00
51.	511	483291	½" drive metric set, with 15 sockets, ratchet and extension	one	100.00	100.00
				Sub Total		$21,965.00
				Reserve		8,035.00
				Total		30,000.00

ANNEX G

ENGINEERING ANALYSIS

The project includes the development of facilities for the National Institute of Research and Scientific Studies (ISERST). This Institute is in the early days of development of its program and the projection of physical facilities is in response to its responsibilities in the following areas:

A. Earth and Energy Science

(Including mining, mapping, geophysics, geochemistry, hydrology: solar)

B. Life Science

(Including marine and terrestial biology, agronomy, tropical animal husbandry, soils).

C. Human Sciences

(Including linguistics, multi-lingual education, and archeology)

The Institute, in late 1979, prepared a general plan of its space requirements which are to be reflected in a new building which is to be sited and built in the capital city.

This ISERST plan indicates the following space allocations:

A. Earth Science and Energy	1334 m2
B. Life Science	324 m2
C. Human Science	480 m2
D. Directorate	2454 m2

The AID Project Analysis team has proposed an additional 150 m2 of workshop, 70 m2 of storage and 70 m2 of offices for solar and wind studies and research in the Energy Wing. Analysis of the above 1979 plan as presented by ISERST indicates probable overallocation of space to the Directorate and probable benefits obtainable by combining the several library facilities into one unit. The present Directorate will continue to function over the near term in its present location, while working out the

construction of the new facilities. A revision of costs indicates that the GROD estimate of 1979 is understated for the now projected construction schedule.

To proceed with these new facilities, short term services of leaders in the respective scientific disciplines should be engaged to provide lists of scientific equipment and to define functional space requirements. The GROD would then contract with a U.S. A/E firm (with local associate) to design the facility, phasing its actual construction to accord with priorities and available funding.

The Government of Djibouti has initiated the design and construction of its administrative directorate building for construction of its administrative directorate building for ISERST with its own funding. The AID project will focus on the planning of the Earth Science and Energy Wing, with the innovative energy conserving design and construction of a building to provide the 300 m2 area for solar and wind purposes and approximately 500 m2 of the area projected for the earth science program. The building will be done primarily to house the AID funded technical effort in solar and wind, with a nominal response to earth science space needs in order to meld the two scientific interests within ISERST. If bid prices permit, additional areas of equipment for the planned earth science wing may be included within the AID financed structure.

The architect will be required to work closely with the energy TA team in designing the energy saving aspects of the building such as orientation, insulation, shading, other thermal protection, and space cooling of offices and of lab areas with delicate equipment. He should engage the services of a local associate architect who is fully conversant with local materials and practices. In consideration of the need to break new ground in the energy conservation aspects of the design, the A/E firm should be a U.S. firm with a proven track record in this design area.

The local associate will be a Code 935 firm and will perform inspection of the actual construction.

The A/E will visit the area, familiarize itself with local conditions and materials, generally plan the Earth Science and Energy Wing, design the project building, prepare an invitation for bid, evaluate bids, and supervise construction. The T/A team will provide short term expert counsel to ISERST to determine space requirements for this entire Wing and will so advise the architect.

The actual construction contract will be signed either between the Government of Djibouti or AID and the construction Contractor. The Authorization of the grant should provide

authorization for REDSO/AID-Djibouti to sign such a contract, and to administer/amend the T/A-A/E contracts following its (their) signature.

Code 935 plus Djibouti will be required for construction materials, and equipment. For construction services, the value is too low to attract Code 941 firms from any further than Kenya and Sudan. Accordingly, publication in the Commerce Business Daily should be waived. The principal construction firms active in Djibouti are Code 935 ownership although there are a few Djiboutian firms. In order to assure competition it is recommended that a waiver be given for Code 941 plus 935 and Djibouti on construction services and for A/E services to support the US A/E firm.

The site will be selected in the capital city area and provided by the GRCD. The site will be above storm water levels (filled in where necessary) and provided with storm water drainage. The GRCD will provide required utility services to the site such as electricity, potable water, and sanitary sewerage.

The buildings will be steel or reinforced concrete frame with concrete block walls. Offices and laboratories with delicate equipment will be air conditioned. Flooring will be concrete, with tile surface except for workshop areas. The architect will pay particular attention to energy conserving solutions to the severely hot climate of Djibouti, to the periodic sandstorms, and to termite infestation.

ESTIMATE

650 m of offices, library, & laboratories at 130,000 DF	84,500,000
150 m of workshop, storage, and toilets at 100,000 DF	15,000,000
Construction Direct Cost	99,500,000 D.F
Design Consultant on Earth Science Wing	1,165,000
A/E Services	17,600,000
15 % Escalation on Construction	15,000,000
19% Overall Contingency	25,135,000
TOTAL ESTIMATE	158,400,000 D.F
EQUIVALENT U.S.$	900,000

$1 = 176 DF

ANNEX H

A.I.D. PROJECT STATUTORY CHECKLIST

1. Country Checklist

   The Country checklist is attached, see following page.

2. Standard Item Checklist

   There are no items in the Standard Item Checklist that require or warrant special treatment or concern. Pursuant to AID procedures (HB 3, App. 5C, p 5C-1), this checklist has not been included in this Project Paper.

3. Project Checklist

   The Project Checklist is attached, see following page.

5C (1) - COUNTRY CHECKLIST

Listed below are, first, statutory criteria applicable generally to FAA funds, and then criteria applicable to individual fund sources; Development Assistance and Security Supporting Assistance funds.

A. GENERAL CRITERIA FOR COUNTRY

1. FAA Sec. 116. Can it be demonstrated that contemplated assistance will directly benefit the needy? If not, has the Department of State determined that this government has engaged in consistent pattern or gross violations of internationally recognized human rights?	Yes. If project interventions such as prototypes prove feasible they will have direct impact on quality of life of majority of populace.
2. FAA Sec. 481. Has it been determined that the government of recipient country has failed to take adequate steps to prevent narcotics drugs and other controlled substances (as defined by the Comprehensive Drug Abuse Prevention and Control Act of 1970) produced or processed, in whole or in part, in such country, or transported through such country, from being sold illegally within the jurisdiction of such country to U.S. Government personnel or their dependents, or from entering the U.S. unlawfully?	No.
3. FAA Sec. 620 (b). If assistance is to a government, has the Secretary of State determined that it is not controlled by the international Communist movement?	Yes.
4. FAA Sec. 620 (c). If assistance is to government, is the government liable as debtor or unconditional guarantor on any debt to a U.S. citizen for goods or services furnished or ordered where (a) such citizen has exhausted available legal remedies and (b) debt is not denied or contested by such government?	No.

5. FAA Sec. 620 (e) (1). If assistance is to a government, has it (including government agencies or subdivisions) taken any action which has the effect of nationalizing, expropriating, or otherwise seizing ownership or control of property of U.S. citizens or entities beneficially owned by them without taking steps to discharge its obligations toward such citizens or entities?	No.
6. FAA Sec. 620 (a), 620 (f) App. Sec. 107, 114. Is recipient country a communist country? Will assistance be provided to the Socialist Republic of Vietnam, Cambodia, Laos, Cuba, Uganda, Mozambique, or Angola?	No.
7. FAA Sec. 620 (i). Is recipient country in any way involved in (a) subversion of, or military aggression against, the United States or any country receiving U.S. assistance, or (b) the planning of such subversion or agression?	No.
8. FAA Sec. 620 (j). Has the country permitted. or failed to take adequate measures to prevent, the damage or destruction, by mom action, of U.S. property?	No.
9. FAA Sec. 620 (l). If the country has failed to institute the investment guaranty program for the specific risks of expropriation, inconvertibility or confiscation, has the AID Administrator within the past year considered denying assistance to such government for this reason?	No.
10. FAA Sec. 620 (o); Fishermen's Protective Act, Sec. 5. If country has seized, or imposed any penalty or sanction against, any U.S. fishing activities in international waters,	It has not.

a. has any deduction required by Fishermen's Protective Act been made?

b. has complete denial of assistance been considered by AID Administrator?

11. FAA Sec. 620 (q); App. Sec. 503. a) Is the government of the recipient country in default on interest or principal of any AID loan to the country? b) Is country in defalut exceeding one year on interest or principal on U.S. loan under program for which App. Act appropriates funds, unless debt was earlier disputed, or appropriate steps taken to cure default?

No.

No.

12. FAA Sec. 620 (s), "If contemplated assistance is development loan (inculding Alliance loan) or security supporting assistance, has the Administrator taken into account the percentage of the country's budget which is for military expenditures, the amount of foreign exchange spent on military equipment and the amount spent for the purchase of sophisticated weapons systems?" (an affirmative answer may refer to the record of the taking into account, e.g., "Yes as reported in annual report on implementation of Sec. 620 (s)". This report is prepared at the time of approval by the Administrator of the Operational Year Budget.

Upward changes in the Sec. 620 (s) factors occuring in the course of the year, of sufficient significance to indicate that an affirmative answer might need review, should still be reported, but the statutory checklist will not normally be the preferred vehicle to do so).

To the extent Djibouti has defense outlays, they are almost entirely a function of French assistance to Djibouti.

13. FAA Sec. 620 (t). Has the country severed diplomatic relations with the United States? If so, have they been resumed and have new bilateral assistance agreements been negotiated and entered into since such resumption?

No.

14. FAA Sec. 620 (u). What is the payment status of the country's U.N. obligations? If the country is in arrears, were such arrearages taken into account by the AID Administration Operational Year Budget?	There are no outstanding obligations to U.N.
15. FAA Sec. 620 A. Has the country granted sanctuary from prosecution to any individual or group which has committed an act of international terrorism?	No.
16. FAA Sec. 666. Does the country object, on basis of race, religion, national origin or sex, to the presence of any officer or employee of the U.S. there to carry out economic development program under FAA?	No.
17. FAA Sec. 669, 670. Has the country, after August 3, 1977, delivered or received nuclear enrichment or reprocessing equipment, materials, or technology, without specified arrangements or safeguards? Has it detonated a nuclear device after August 3, 1977 although not a "nuclear weapon State" under the non-proliferation treaty?	No.
18. FAA Sec. 901. Has the country denied its citizens the right or opportunity to emigrate?	No.

B. FUNDING CRITERIA FOR COUNTRY

1. Development Assistance Country Criteria	Not applicable.
a. FAA Sec. 102 (c), (d). Have criteria been established, and taken into account to assess commitment and progress of country in effectively involving the poor in development, on such indexes as: 1) small-farm labor intensive agriculture, 2) reduced infant mortality,	

3) population growth
4) equality of income distribution and
5) unemployment.

b. FAA Sec. 104 (d) (1). If appropriate, is this development (including sahel) activity designed to build motivation for smaller families in programs such as education in and out of school, nutrition, disease control, maternal and child health services, agricultural production, rural development, and assistance to urban poor?

c. FAA Sec 201 (b) (5), (7) and (8) Sec. 211 (a) (4) and (7). Describe extent to which country is:

(1) Making appropriate efforts to increase food production and improve means for food storage and distribution.

(2) Creating a favorable climate for foreign and domestic private enterprise and investment.

(3) Increasing the public's role in the developmental process.

(4) (a) Allocating available budgetary resources to development.

(b) Diverting such resources for unnecessary military expenditure and intervention in affairs of other free and independant nations.

(5) Making economic, social, and political reforms such as tax collection improvements and changes in land tenure arrangements, and making progress toward respect for the rule of law, freedom of expression and of the press, and recognizing the importance of individual freedom and private enterpirse.

(6) Otherwise responding to the vital economic, political, and social concerns

of its people, and demonstrating a clear determination to take effective self-help measures.

(a) FRR Sec. 210 (b), 211 (a). Is the country among the 20 countries in which development assistance loans may be made in this fiscal year, or among the 40 in which development assistance grants (other than for self-help projects) may be made?

(b) FAA Sec. 115. Will country be furnished, in same fiscal year, either security supporting assistance, or Middle East peace funds? If so, has Congress specifically authorized such use of funds, or is assistance for population programs, humanitarian aid through international organizations, or regional programs?

2. Security Supporting Assistance Country Criteria.

a. FAA Sec. 502B. Has the country engaged in a consistent pattern of gross violations or internationally recognized human rights?	No.
Is Program in accordance with policy of this Section?	Yes.
b. FAA Sec 531. Is the Assistance to be furnished to a friendly country, organization, or body eligible to receive assistance?	Yes.
c. FAA Sec. 533 (c) (2). Will assistance under the Southern African Special Requirements fund be provided to Mozambique, Angola, Tanzania or Zanzibar? If so, has President determined (and reported to the Congress) that such assistance will further U.S. foreign policy interests?	Not Applicable

d. FAA Sec. 609. If commodities are to be granted so that sale proceeds will accrue to the recipient country have Special Account, (counterpart) arrangements been made?	Not applicable
e. App. Sec. 113. Will security assistance be provided for the purpose of aiding directly the efforts of the government of such country to repress the legitimate rights of the population of such country contrary to the Universal.	No.

5C(2) - PROJECT CHECKLIST

Listed below are, first, statutory criteria applicable generally to projects with FAA funds, and then project criteria applicable to individual fund sources: Development Assistance (with a sub-category for criteria applicable only to loans) and Security Supporting Assistance Funds.

CROSS REFERENCES: IS COUNTRY CHECKLIST UP TO DATE? IDENTIFY. HAS STANDARD ITEM CHECKLIST BEEN REVIEWED FOR THIS PROJECT?

A. GENERAL CRITERIA FOR PROJECT.

1. App. Unnumbered: FAA Sec. 653 (b); Sec. 671

a) Describe how Committees on Appropriations of Senate and House have been or will be notified concerning the project;	a) Congressional Notification submitted in November 1980.
b) is assistance within (Operational Year Budget) country or international organization allocation reported to Congress (or not more than $1 million over that figure).	b) Yes

2. FAA Sec. 611 (a)(1). Prior to obligation in excess of $100,000 will there be a) engineering, financial, and other plans necessary to carry out the assistance and	a) Yes
b) a reasonably firm estimate of the cost to the U.S. of the assistance?	b) Yes
3. FAA Sec. 611 (a)(2). If further legislative action is required within recipient country what is basis for reasonable expectation that such action will be completed in time to permit orderly accomplishment of purpose of the assistance?	None foreseen
4. FAA Sec. 611(b); App. Sec. 101. If for water or water-related land resource construction, has project met the standards and criteria as per the Principles and Standards for Planning Water and Related Land Resources dated October 25, 1973?	No water related construction activities will be directly financed under this project.
5. FAA Sec. 611 (e). If project is capital assistance (e.g., construction), and all U.S. assistance for it will exceed $1 million, has Mission Director certified the country's capability effectively to maintain and utilize the project?	Not applicable.

6.	FAA Sec. 209, 619. Is project susceptible of execution as part of regional or multilateral project? If so, why is project not so executed. Information and conclusion whether assistance will encourage regional development programs. If assistance is for newly independent country, is it furnished through multilateral organizations or plans to the maximum extent appropriate?	No.
7.	FAA Sec. 601 (a); and Sec. 201 (f) for development loans. Information and conclusions whether project will encourage efforts of the country to: a) increase the flow of international trade; (b) foster private initiative and competition; (c) encourage development and use cooperatives, credit unions, and savings and loan associations; (d) discourage monopolistic practices; 3) improve technical efficiency of industry, agriculture and commerce; and (f) strengthen free labor unions.	Response to "a" through "e" is most definitely. Do not foresee that project will have impact one way or another on labor movement.
8.	FAA Sec. 601 (b). Information and conclusion on how project will encourage U.S. private trade and investment abroad and encourage private U.S. participation in foreign assistance programs (including use of private trade channels and the services of U.S. private enterprise.	Material supplied under this project, if proven socially, economically, and technically feasible, will encourage host-country to seek out both material and technical assistance from U.S. private sector.
9.	FAA Sec. 612 (b); Sec. 636 (h) Describe steps taken to assure that, to the maximum extent possible, the country is contributing local currencies to meet the cost of contractual and other services, and foreign currencies owned by the U.S. are utilized to meet the cost of contractual and other services.	All of Government input to this project is to meet local currency requirements. U.S. must also provide significant local currency contribution due to extremely high operating costs in country.
10.	FAA Sec. 612 (d). Does the U.S. own excess foreign currency and, if so, what arrangements have been made for its release?	No.

11. ISA 14. Are any FAA funds for FY 78 being used in this Project to construct operate, maintain, or supply fuel for cooperation between the United States and any other country? — No.

B. FUNDING CRITERIA FOR PROJECT

1. Development Assistance Project Criteria — Not applicable.

a. FAA Sec. 102 (c°; Sec. 111; Sec. 281 a
Extent to which activity will a) effectively involve the poor in development, by extending access to economy at local level, increasing labor-intensive production, spreading investment out from cities to small towns and rural areas, and
b) help develop cooperatives, especially by technical assistance, to assist rural and urban poor to help themselves toward better life, and other wise encourage democratic private and local governmental institutions?

b. FAA Sec. 103, 103A, 104, 105, 106, 107.
Is assistance being made available: include only applicable paragraph -- e.g., a, b, etc. -- which corresponds to source of funds used. If more than one fund source is used for project, include relevant paragraph for each fund source.

1) -103- for agriculture, rural development or nutrition; if so, extent to which activities specifically designed to increase productivity and income of rural poor.
-103A - if for agricultural research, is full account taken of needs of small farmers;

2) -104 - for population planning or health; if so, extent to which activity extends low-cost, integrated delivery systems to provide health and family planning services, especially to rural areas and poor;

3) -105- for education, public administration or human resources development; if so, extent to which activity strengthens nonformal education, makes formal education more relevant, especially for rural families and urban poor, or strengthens management capability of institutions enabling the poor to participate in development;

4) -106- for technical assistance, energy, research, reconstruction, and selected development problems; if so, extent activity is:
a) technical cooperation and development, especially with U.S. private and voluntary, or regional and international development, organizations;

b) to help alleviate energy problems;

c) research into, and evaluation of, economic development processes and techniques;

d) reconstruction after natural or manmade disaster;

e) for special development problem, and to enable proper utilization of earlier U.S. infrastructure, etc., assistance;

f) for programs of urban development, especially small labor intensive enterprises, marketing systems, and financial or other institutions to help urban poor participate in economic and social development.

5) -107- by grants for coordinated private effort to develop and disseminate intermediate technologies appropriate for developing countries.

c. FAA Sec. 110(a); Sec. 208 (e). Is the recipient country willing to contribute funds to the project, and in what manner has or will it provide at least 25% of the costs of the program, project, or activity with respect to which the assistance is to be furnished (or has the latter cost-sharing requirement been waived for a "relatively least-developed country")?

d. FAA Sec. 110 (b). Will grant capital assistance be disbursed for project over more than 3 years? If so, has justification satisfactory to Congress been made, and efforts for other financing, or is the recipient country "relatively least developed"?

e. FAA Sec. 207; Sec. 113. Extent to which assistance reflects appropriate emphasis on; (1) encouraging development of democratic, economic, political, and social intitutions; (2) self-help in meeting the country's food needs; (3) improving availability of trained worker-power in the country; (4) programs designed to meet the country's health needs; (5) other important areas of economic, political, and social development, including industry; free labor unions, cooperatives, and Voluntary Agencies; transportation and communication; planning and public administration; urbandevelopment, and modernization of existing laws; or (6) integrating women into the recipient country's national economy.

f. FAA Sec. 281 (b). Describe extent to which program recognizes the particular needs, desires, and capacities of the people of the country; utilizes the country's intellectual resources to encourage institutional development; and supports civic education and training in skills required for effective participation in governmental and political processes essential to self-government.

g. FAA Sec. 201 (b) (2)-(4) and (8); Sec. 201 (e); Sec. 211 (a) (1)-(3) and (8). Does the activity give reasonable promise of contributing to the development: of economic resources, or to the increase of productive capacities and self-sustaining economic growth; or of educational or other institutions directed toward social progress? It is related to and consistent with other development activities, and will it contribute to realizable long-range objectives? And does project paper provide information and conclusion on an activity's economic and technical soundness?

h. FAA Sec. 201 (b) (6); Sec. 211 (a) (5) (6). Information and conclusion on possible effects of the assistance on U.S. economy with special reference to areas of substantial labor surplus, and extent to which U.S. commodities and assistance are furnished in a manner consistent with improving or safeguarding the U.S. balance-of payments position.

2. DEVELOPMENT ASSISTANCE PROJECT CRITERIA (Loans only) — Not applicable.

a. FAA Sec. 201 (b) (1). Information and conclusion on availability of financing from other free-world sources, including private sources within U.S.

b. FAA Sec. 201 (b) (2); 201 (d). Information and conclusion on (1) capacity of the country to repay the loan, including reasonableness and legality (under laws of country and U.S.) of lending and relending terms of the loan.

c. FAA Sec. 201 (e). If loan is not made pursuant to a multilateral plan, and the amount of the loan exceeds $100,000 has country submitted to AID an application for such funds together with assurances to indicate that funds will be used in an economically and technically sound manner?

d. FAA Sec. 201 (f). Does project paper describe how project will promote the country's economic development taking into account the country's human and material resources requirements and relationship between untimate objectives of the project and overall economic development?

e. FAA Sec. 202 (a). Total amount of money under loan which is going directly to private enterprise, is going to intermediate credit institution or their borrowers for use by private enterprise, is being used to finance imports from private sources, or is other wise being used to finance procurements from private sources?

f. FAA Sec. 620 (d). If assistance is for any productive enterprise which will compete in the U.S. with U.S. enterprise, is there an agreement by the recipient country to prevent export to the U.S. of more than 20% of the enterprise's annual production during the life of the loan?

3. PROJECT CRITERIA SOLELY FOR SECURITY Supporting Assistance

a. FAA Sec. 531. How will this assistance support promote economic or political stability?

Assistance will provide institutional capacity to effect national decision-making vis-a-vis long-term energy consumption, at present and for foreseeable future a non-stabilizing factor unless redressed.

b. FAA Sec. 533 (c) (1). Will assistance under the Southern African Special Requirements Fund be used for military, guerrilla, or paramilitary activities?

No.

4. ADDITIONAL CRITERIA FOR ALLIANCE FOR PROGRESS

(Note: Alliance for Progress projects should add the following two items to a project checklist).

Not applicable.

a. FAA Sec. 251 (b) (1), (8). Does assistance take into account principles of the Act of Bogota and the Charter of Punta del Este; and to what extent will the activity contribute to the economic or political integration of Latin America?

b. FAA Sec. 251 (b); 251 (h). For loans has there been taken into account the effort made by recipient nation to repatriate capital invested in other countries by their own citizens? Is loan consistent with the findings and recommendations of the Inter-American Committee for the Alliance for Progress (now "CEPCIES"), the Permanent Executive Committee of the OAS in its annual review of national development activities?

5C (3) STANDARD ITEM CHECKLIST

Listed below are statutory items which normally will be covered routinely in those provisions of an assistance agreement dealing with its implementation, or covered in the agreement by exclusion (as where certain uses of funds are permitted but other uses not).

These items are arranged under the general headings of A) Procurement; B) Construction and C) Other Restrictions.

A. Procurement

1. FAA-Sec.602. Are there arrangements to permit U.S. small business to participate equitably in the furnishing of goods and services financed?	Yes.
2. FAA Sec.604(a). Will all commodity procurement financed be from the U.S. except as otherwise determined by the President or under delegation from him?	Yes.
3. FAA Sec. 604(d). If the cooperating country discriminates against U.S. marine insurance companies will agreement require that marine insurance be placed in the U.S. on commodities financed?	It does not discriminate.
4. FAA Sec.604 (e). If offshore procurement of agricultural commodity or product is to be financed is there provision against such procurement when the domestic price of such commodity is less than parity?	Not applicable.
5. FAA Sec. 608 (a). Will U.S. Government excess personal property be utilized wherever practicable in lieu of the procurement of new items?	Yes, but given thrust of project, i.e. to introduce appropriate technologies no excess property procurement is foreseen.
6. MM A Sec. 901 (b) (a). Compliance with requirement that at least 50 per centum of the gross tonnage of commodities (computed separately for dry bulk carriers, dry cargo liners, and tankers) financed shall be transported on privately owned U.S. flag commercial vessels are available at fair and reasonable rates.	Yes.
7. FAA Sec. 621. If technical assistance is financed, will such assistance be furnished to the fullest extent practicable as goods and professional and other services from private enterprise on a contract basis?	Yes.
If the facilities of other Federal agencies will be utilized are they particularly suitable, not competitive with private enterprise; and made available without under interference with domestic programs?	Yes.

8. International Air Transport. Fair Competitive Practices Act, 1974

If air transportation of persons or property is financed on grant basis will provision be made that U.S. flag carriers will be utilized to the extent such service is available? — Yes.

B. Construction

1. FAA Sec. 601 (d). If a capital (e.g. construction) project, are engineering and professional services of U.S. firms and their affiliates to be used to the maximum extent consistent with the national interest? — Though not a capital. Assistance project *per se*, such U.S. firms will be used to maximum extent possible.

2. FAA Sec. 611 (c). If contracts for construction are to be financed, will they be let on a competitive basis to maximum extent practicable? — Yes.

3. FAA Sec. 620 (k). If for construction of productive enterprise, will aggregate value of assistance to be furnished by the U.S. not exceed $100 million? — Yes.

C. Other Restrictions

1. FAA Sec. 201 (d). If development loan is interest rate at least 2% per annum during grace period and at least 3% per annum thereafter? — Not applicable.

2. FAA Sec. 301 (d). If fund is established solely by U.S. contributions and administered by an international organization, does Comptroller General have audit rights? — Not applicable.

3. FAA Sec. 620 (h). Do arrangements preclude promoting or assisting the foreign aid projects or activities of Communist-Bloc countries, contrary to the best interests of the U.S.? — Yes.

4. FAA Sec. 636 (i). Is financing not permitted to be used, without waiver, for purchase, long-term lease, or exchange of motor vehicle manufactured outside the U.S. or guaranty of such transaction? — Yes.

5. Will arrangements preclude use of financing:

a. FAA Sec. 114 to pay for performance of abortions or to motivate or coerce persons to practice abortions, to pay for performance of involuntary sterilization, or to coerce or provide financial incentive to any person to practice sterilization? — Yes.

b. FAA Sec. 620 (g) To compensate owners for expropriated nationalized property?	Yes.
c. FAA Sec. 660. to finance police training or other law enforcement assistance, except for narcotics programs?	Yes.
d. FAA Sec. 662. For CIA activities?	Yes.
e. App. Sec. 103. To pay pensions, etc., for military personnnel?	Yes.
f. App. Sec. 105. To pay U.N. assessments?	Yes.
g. App. Sec. 106. To carry out provisions of FAA Sections 209 (d) and 251 (h)? (transfer to multilateral organization for lending).	Yes.
h. App. Sec. 112. To finance the export of nuclear equipment, fuel, or technology or to train foeign national in nuclear fields?	Yes.
i. App. Sec. 501. To be used for publicity or propaganda purposes within U.S. not authorized by Congress?	Yes

ANNEX I: GROD Request for Assistance

بسم الله الرحمن الرحيم
جمهورية جيبوتي
الوحدة - المساواة - السلام
REPUBLIQUE DE DJIBOUTI
Unité — Egalité — Paix

N° 129 /PRE.80

رئيس الجمهورية
رئيس الحكومة
LE PRESIDENT DE LA REPUBLIQUE
Chef du Gouvernement

جيبوتي في ١٩٨

Djibouti, le 29 FEV. 1980 198

Monsieur l'Ambassadeur,

Le désir que vous avez exprimé dans votre lettre en date du 6 Février 1980 d'être en mesure d'obtenir l'assistance de l'I.S.E.R.S.T. pour l'étude des diverses sources d'énergie exploitables, a fait l'objet d'instructions précises, auprès de ce dernier Organisme afin que satisfaction vous soit accordée.

Aussi vous serai-je obligé de considérer que les recherches évoquées lors de notre entretien du 29 Janvier 1980 doivent être poursuivies.

Veuillez agréer, Monsieur l'Ambassadeur, les assurances de ma haute considération.

LE PRÉSIDENT
الرئيس

HASSAN GOULED APTIDON

Son Excellence Monsieur Walter S. CLARKE
Chargé d'Affaires
AMBASSADE DES ETATS UNIS
DJIBOUTI

ANNEX J

WAIVERS

ACTION MEMORANDUM FOR THE ASSISTANT ADMINISTRATOR FOR AFRICA

FROM: DJIBOUTI ENERGY INITIATIVES PROJECT (603-0013)

SUBJECT: VEHICLE PROCUREMENT WAIVER

PROBLEM: Your approval is required to permit procurement of vehicles

Code 935 (Special Free World)

a.	Cooperating Country:	Djibouti
b.	Authorizing Document:	Project Authorization
c.	Project:	Energy Initiatives (603-0013)
d.	Nature of Funding:	Grant
e.	Description of Commodities	(a) two Toyota Pickup type, 4WD (b) two Toyota Landcruiser type (c) Spare Parts
f.	Approximate Value:	$80,000
g.	Probable Origin:	Japan
h.	Probable Source:	Djibouti

Discussion: Section 636(i) of the Foreign Assistance Act of 1961, as amended, prohibits A.I.D. from purchasing motor vehicles unless such vehicles are manufactured in the United States. Section 636(i) does provide, however, that "...where special circumstances exist, the President is authorized to waive the provision of this act in order to carry out the purpose of this act." Criteria for such waivers are contained in Handbook I, Supplement B which states that vehicles procured under grants must be U.S. source/origin unless waiver is obtained. Handbook I, Supplement B, Paragraph 4C 2d(1)(b) provide that a waiver may be granted when necessary to carry out the purpose of the FAA and if, inter alia, there is present or projected lack of adequate service facilities and supply of spare parts for U.S. manufactured vehicles. The authority to determine that special circumstances exist for purpose of Section 636(i) and that there is adequate justification for a waiver under Handbook 1, Supplement B has been delegated to you under Delegation No. 40.

The Government of the Republic of Djibouti has requested A.I.D. assistance in establishing institutional capability within Djibouti's Scientific and Technological Research Institute to plan, execute and evaluate alternative forms of energy in order to reduce their dependence on imported fossil fuels. The above project vehicles are required to provide mobility for the project technicians who will be required to visit remote areas throughout Djibouti in the collection of energy data. These remote areas as well as the City of Djibouti do not have service facilities or spare parts for U.S. manufactured vehicles. Whereas the dealers for foreign manufactured vehicles have an adequate supply of spare parts and maintenance facilities. It is our opinion that special circumstances exist which justify waiving the source/origin requirements as set forth in AID Handbook 1, Supplement B.

Recommendation: For reasons stated above, it is recommended that (1) you conclude that special circumstances exist which justify the waiver of the requirement of procurement of U.S. manufactured vehicles under the FAA Section 636(i), and (2) that you certify that exclusion of procurement from Free World countries other than the cooperating countries and countries included in Code 941 would seriously impede attainment of U.S. foreign policy objectives and objectives of the foreign assistance programs.

Approved: _____

Disapproved: _____

Date: _____

ANNEX K

DRAFT AUTHORIZATION PACKAGE

ACTION MEMORANDUM FOR THE ASSISTANT ADMINISTRATOR FOR AFRICA

FROM : J W KOEHRING

SUBJECT : Djibouti Energy Initiatives Project (603-0013)

Problem:

Your approval is required to authorize a grant of $2,000,000 from the FAA Section 106, Special Development Activities (SDA) appropriation during FY 1981 to the Government of Djibouti for the Energy Initiatives Project (603-0013). Your approval is also required for the proposed life of project funding of $4,000,000 as well as for source/origin waivers.

Discussion:

A. Project Description

The Djibouti energy initiatives project aims at assisting GROD to reduce part of its balance of payments disequilibria caused by the importation of fossil fuels by introducing a solar and wind energy and energy conservation capability. The project simultaneously endeavors to strengthen the critical link between economic development planning and requisite applied research and studies by strengthening Djibouti's sinble scientific and technological research institute.

Specifically, the project will assist in establishing the institutional capability within Djibouti's Scientific and Technological Research Institution, to plan, execute and evaluate alternative energy development and conservation programs. The project will accomplish this purpose by providing:

- An Information and Analytical Base, to address the critical constraint to development of a renewable energy program in Djibouti
- Prototype Use for Pilot Interventions, to provide ISERST with experience in developing alternative energy by means of ISERST's full participation in implementation of a series of pilot interventions using wind and solar prototypes including:
  - windmill water pumps
  - electrical wind generator
  - solar distillation
  - solar fish-drying
  - solar fish-smoking
  - photovoltaic water pumping

- Assessment and Dissemination of Research Results, to serve as the basis for determining what prototypes are suitable for commercialization or widespread use and under what circumstances. Once these assessments have been made, the project will provide for dissemination of the results to assure eventual adoption by government and private enterprizes.
- Energy Conservation Component, to introduce and sensitivize Djiboutians to the need for, and methodology of, a more significant conservation effort at a later date. This conservation component will consist of small scale surveys, of representative energy users, initial proposals for feasible modifications of present and future facilities and support in local building materials research. An important element of the conservation component will also be the design of the project-funded Earth Sciences building. This building will be designed to be a demonstration model of energy conservation.
- Final Report to Government, to be one of the important bases on which the to-be-established National Energy Commission develops its national energy strategy.

B. Financial Summary

The total project cost is $5,350,000, making AID's contribution of $4,000,000 74 per cent. The Djibouti contribution is 1,350,000 or 26 per cent.

First year and life-of-project funding is:

	First Year (000)	Life of Project (000)
Technical Assistance	554	780
Commodities	292	862
Participant Training	10	35
Construction	900	900
Other Costs	106	444
Contingency	138	303
Inflation	-	676
TOTAL	2,000	4,000

C. Socio-Economic, Technical and Environmental Considerations

The project review sessions found the project to be socially, economically, and technically sound.

The initial environmental Examination has recommended a Negative Determination.

The plans, specifications and cost estimates for the construction meet the requirements of Section 611 (a) of the Foreign Assistance Act.

The Christopher Working Group on Human Rights has not raised any issues with respect to the project.

D. Waivers, Conditions Precedent and Covenants

The Project Authorization contains a Geographic Source Waiver to permit purchase in Djibouti of four four-wheel drive vehicles, valued at approximately $ 80,000 from Japan.

To assure proper and timely implementation of the project, the Authorization includes two special Conditions Precedent. The first CP is to insure that the qualified Djiboutian counterpart is identified and secunded to ISERST. The second CP is to insure that the site for construction of the ISERST Earth Science Building has been identified.

E. Committee Action and Congressional Apprisement

The project was reviewed by the Project Committee on May 1981. The Project Review Meeting was held on May , and the Africa Bureau Executive Committee for Project Review (ECPR) on June . The ECPR, agreeing with the findings of the two prior reviews, recommended that the project be forwarded for your authorization.

F. The USAID/Yaounded Project Officer is Elsworth Amundson. In AFR/DR, the Project Officer is Alex Newton.

Recommendation:

That, you sign the attached Project Authorization, thereby authorizing the project and approving the requested waivers.

PROJECT AUTHORIZATION

Country: Republic of Djibouti

Project: Energy Initiatives

Project Number: 603-0013

Pursuant to Section 106 of the Foreign Assistance Act of 1961, as amended, (the "Act"), I hereby authorize the Energy Initiatives Project for Djibouti involving planned obligations of not to exceed $4 million in grant funds over a five year period from date of authorization, subject to the availability of funds in accordance with the AID OYB/allotment process, to help in financing foreign exchange and local currency costs for the project.

The project consists of providing assistance in order to strengthen and improve the Djiboutian institutional capacity to plan, execute and evaluate renewable energy programs and projects. The assistance will be in the form of construction of the Earth Sciences Division of the National Institute of Higher Science and Technological Research (ISERST), procurement of certain equipment for these facilities, and training ISERST personnel to enable them to develop energy research and development projects and programs and to design, assemble, monitor, maintain and assess performance of prototype alternative energy equipment.

The Project Agreement, which may be negotiated and executed by the officer(s) to whom such authority has been delegated in accordance with A.I.D. regulations and Delegations of Authority, shall be subject to the following essential terms and conditions, together with such other terms and conditions as A.I.D. may deem appropriate:

A. Source and Origin of Goods and Services.

Goods and services, except for ocean shipping, financed by A.I.D. under the Grant shall have their source and origin in the United States or in the Cooperating Country, except as A.I.D. may otherwise agree in writing. Ocean shipping financed under the Grant shall be procured in the United States, except as A.I.D. may otherwise agree in writing.

B. Conditions Precedent.

The Project Grant Agreement shall contain conditions precedent in substance as follows:

1. Prior to the first disbursement under the grant, the Cooperating Country shall furnish to A.I.D., in form and substance satisfactory to A.I.D., the name of the qualified official who will serve within ISERST as the full-time host country counterpart to the A.I.D. contract engineer/chief-of-party, as well as the date on which this counterpart is to be assigned to the project;

2. Prior to disbursement under the Grant for construction of ISERST facilities, the Cooperating Country shall furnish to A.I.D., in form and substance satisfactory to A.I.D., except as A.I.D. may otherwise agree in writing, evidence that the land for construction of the A.I.D.-financed Earth Sciences Division of ISERST has been procured.

C. Covenants.

The Project Grant Agreement shall contain a covenant in substance as follows:

The Cooperating Country agrees to provide adequate financing to support and maintain A.I.D.-financed equipment, buildings and vehicles after the Project has ended.

D. Waiver

Notwithstanding paragraph A above and based on the justification in Annexes G and M of the Project Paper, I hereby approve a procurement source/origin waiver from Geographic Code 000 (U.S.) to Geographic Code 935 (Free World) for the purchase of four four-wheel drive vehicles valued at approximately $80,000, and certify that exclusion of procurement from Free World countries other than the Cooperating Country and countries included in Code 941 would seriously impede the attainment of U.S. foreign policy objectives and the objectives of the foreign assistance program.

Signed: _____
Assistant Administrator for Africa

Date: _____