PD-AAF-926

517-0143 00

42 01

UNCLASSIFIED

UNITED STATES INTERNATIONAL DEVELOPMENT COOPERATION AGENCY
AGENCY FOR INTERNATIONAL DEVELOPMENT
Washington, D. C. 20523

DOMINICAN REPUBLIC

PROJECT PAPER

ENERGY POLICY DEVELOPMENT

LAC/DR:80-14

Project Number:517-0143

UNCLASSIFIED

AGENCY FOR INTERNATIONAL DEVELOPMENT

PROJECT DATA SHEET

1. TRANSACTION CODE: A (A = Add, C = Change, D = Delete) — Amendment Number

DOCUMENT CODE: 3

2. COUNTRY/ENTITY: DOMINICAN REPUBLIC

3. PROJECT NUMBER: 517-0143

4. BUREAU/OFFICE: USAID/DR

5. PROJECT TITLE (maximum 40 characters): Energy Policy Development

6. PROJECT ASSISTANCE COMPLETION DATE (PACD): MM 09 DD 30 YY 82

7. ESTIMATED DATE OF OBLIGATION (Under 'B.' below, enter 1, 2, 3, or 4)

A. Initial FY 80 B. Quarter C. Final FY 81

8. COSTS ($000 OR EQUIVALENT $1 =)

A. FUNDING SOURCE	FIRST FY B. FX	C. L/C	D. Total	LIFE OF PROJECT E. FX	F. L/C	G. Total
AID Appropriated Total	235	65	300	684	80	764
(Grant)	(235)	(65)	(300)	(684)	(80)	(764
(Loan)	( )	( )	( )	( )	( )	(
Other U.S. 1.						
Other U.S. 2.						
Host Country		115	115		260	260
Other Donor(s)						
TOTALS	235	180	415	684	340	1,024

9. SCHEDULE OF AID FUNDING ($000)

A. APPROPRIATION	B. PRIMARY PURPOSE CODE	C. PRIMARY TECH. CODE 1. Grant	2. Loan	D. OBLIGATIONS TO DATE 1. Grant	2. Loan	E. AMOUNT APPROVED THIS ACTION 1. Grant	2. Loan	F. LIFE OF PROJECT 1. Grant	2. Loan
(1) SD	740B	710				764		764	
(2)									
(3)									
(4)									
TOTALS									

10. SECONDARY TECHNICAL CODES (maximum 6 codes of 3 positions each)

11. SECONDARY PURPOSE CODE

12. SPECIAL CONCERNS CODES (maximum 7 codes of 4 positions each)

A. Code	BR	INTR	ING				
B. Amount							

13. PROJECT PURPOSE (maximum 480 characters)

1) To establish a system for providing Dominican decision makers with continuous, updated information necessary for developing sound energy policy and 2) to upgrade the management and technical skills of the National Energy Commission and other agencies involved in the implementation of energy programs.

14. SCHEDULED EVALUATIONS

Interim MM 09 YY 81 MM YY Final MM 09 YY 82

15. SOURCE/ORIGIN OF GOODS AND SERVICES: ☒ 000 ☒ 941 ☒ Local ☐ Other (Specify)

16. AMENDMENTS/NATURE OF CHANGE PROPOSED (This is page 1 of a ____ page PP Amendment.)

17. APPROVED BY

Signature: Philip R. Schaul

Title: Director, USAID/DR

Date Signed: MM 09 DD 19 YY 80

18. DATE DOCUMENT RECEIVED IN AID/W, OR FOR AID/W DOCUMENTS, DATE OF DISTRIBUTION: MM DD YY

PROJECT AUTHORIZATION

NAME OF COUNTRY	:	DOMINICAN REPUBLIC
NAME OF PROJECT	:	ENERGY POLICY DEVELOPMENT
PROJECT NUMBER	:	517-0143

1. Pursuant to Section 106 of the Foreign Assistance Act of 1961, as amended, I hereby authorize the Energy Policy Development project for the Dominican Republic ("Cooperating Country") involving planned obligations of not to exceed seven hundred and sixty four thousand United States Dollars (US$764,000) in grant funds ("Grant") over a two-year period from date of authorization, subject to the availability of funds in accordance with the AID OYB/allotment process, to help in financing foreign exchange and local currency costs for the Project.

2. The Project consists of the provision of resources to establish an energy information system and to strengthen the management and technical skills of public and private agencies and groups involved in the development and implementation of energy programs.

3. The Project Agreement, which may be negotiated and executed by the officer to whom such authority is delegated in accordance with A.I.D. regulations and Delegations of Authority, shall be subject to the following essential terms and covenants and major conditions, together with such other terms and conditions as A.I.D. may deem appropriate.

a. Source and Origin of Goods and Services

With the exception of training outside the Dominican Republic, computerized information tapes and ocean shipping, goods and

services financed by A.I.D. under the Project shall have their source and origin in the United States and in the Cooperating Country, except as A.I.D. may otherwise agree in writing. Training outside the Dominican Republic not exceeding $50,000 and computerized information tapes not exceeding $50,000 may have their Source and Origin in countries included in A.I.D. Geographic Code 941. Ocean shipping financed by A.I.D. under the Project shall, except as A.I.D. may otherwise agree in writing, be financed only on flag vessels of the United States.

b. Conditions Precedent to Initial Disbursement

Prior to any disbursement, or the issuance of any commitment documents under the Project Agreement, the Cooperating Country shall, except as A.I.D. may otherwise agree in writing, furnish to A.I.D., in form and substance satisfactory to A.I.D.: i) evidence that a full time coordinator for the Grant Project has been appointed with adequate staff and equipment to support the administration of the Grant Project; and ii) evidence that the National Energy Policy Commission has hired for a minimum of two years, at competitive salaries and with incentives, additional staff personnel with strong capabilities in computer operating and programming.

c. Condition Precedent to Disbursement for the Procurement of Computer Hardware

Prior to any disbursement, or the issuance of any commitment documents under the Project Agreement to finance the procurement of computer hardware, the Cooperating Country shall, except as A.I.D. may otherwise agree in writing, furnish to A.I.D. in form and substance

satisfactory to A.I.D., evidence that appropriate site preparation measures identified in documents furnished to the Cooperating Country by A.I.D., and any other measures which may be required, have been completed.

d. Condition Precedent to Disbursement for the Mini-Course Program Under the Technical Assistance and Training Component

Prior to any disbursement, or the issuance of any commitment documents under the Project Agreement to finance the Mini-Course Program under the Technical Assistance and Training Component, the Cooperating Country shall, except as A.I.D. may otherwise agree in writing, furnish to A.I.D., in form and substance satisfactory to A.I.D., a detailed plan for the Mini-Course Program developed jointly with the University of Madre y Maestra, which includes topics to be covered and budgetary costs.

e. Condition Precedent to Disbursement for Short and Long Term Training Under the Technical Assistance and Training Component

Except as A.I.D. may otherwise agree in writing, prior to any disbursement, or the issuance of any commitment documents under the Project Agreement to finance short and long term training under the Technical Assistance and Training Component, the Cooperating Country shall furnish to A.I.D., in form and substance satisfactory to A.I.D., a National Training Plan which sets forth the national energy training requirements over both the next two years and the next five years.

Philip R. Schuab

Director, USAID Mission to
the Dominican Republic

SEP. 22 1980

Date

PROJECT PAPER
ENERGY POLICY DEVELOPMENT
CONTENTS

Page

I. SUMMARY AND RECOMMENDATION

A. Recommendation 1

B. Grantee and Implementing Agency. 1

C. Summary Project Description. 1

D. DAEC Issues. 3

E. Project Committee. 5

II. BACKGROUND

A. Energy Problem in the Dominican Republic 6

B. GODR Response to the Energy Problem. 11

C. USAID Energy Assistance Strategy 14

D. Other Donor Activities 17

III. PROJECT DESCRIPTION

A. Goal, Purpose, Inputs, Outputs 19

B. Project Activities 21

1. Energy Information System 21

a) Policy Analysis Component. 21

i) Data Gathering and Processing 24
ii) Computer Program. 25
iii) Staff Development 29

b) Technical Information Transfer Component . . . 31

c) Information Outreach Component 32

i) Public Sector Outreach. 32
ii) Private Sector Outreach 33

Page

2. Technical Assistance and Training 34
a) Training Needs Study and Plan. 34
b) University Mini-Course Program 35
c) Long and Short Term Training 37
C. Summary Financial Plan 39

IV. PROJECT ANALYSES

A. Technical Analysis 40
B. Economic Analysis. 53
C. Social/Target Group Analysis 55
D. Institutional Analysis 59

V. PROJECT IMPLEMENTATION

A. Financial Plan 67
B. Disbursement Procedure and Reporting Requirements. . . . 67
C. Procurement. 69
D. Schedule of Major Events 70
E. Evaluation 72
F. Conditions and Covenants 72

ANNEXES: A. Logical Framework
B. Environmental Threshold Decision
C. Draft Authorization
D. Statutory Checklist
E. GODR Letter of Request
F. Scope of Work for Energy Assessment

I. SUMMARY AND RECOMMENDATION

A. Recommendation

The Energy Project Committee USAID/DR recommends that a Grant be authorized to the Government of the Dominican Republic (GODR) in the amount of $764,000 to support Energy Policy Development by: 1) establishing an Energy Information System; and 2) providing technical assistance and training to public and private sector institutions. The Grant will be implemented over a two year period. It is also recommended that a waiver be requested from the AA/LAC for proprietary procurement under the Policy Analysis component of the Project.

B. Grantee and Implementing Agency

The Grantee and Implementing Agency will be the National Energy Policy Commission, established by Presidential decree in January, 1979. Certain aspects of the program will be implemented by the Energy Commission in collaboration with other government and private agencies and local universities.

C. Summary Project Description

The goal of the Project is to help reduce the dependence of the Dominican Republic on imported petroleum and to increase the availability of affordable energy to low income groups in the country. A sub-goal of the Project is the development of National Energy Plans.

The purposes of the project are: 1) to establish a system for providing continuous updated information necessary for developing sound energy policy and providing technical data to the public and private sectors; and 2) to upgrade the management and technical skills of the National Energy Commission, other public sector agencies and private groups involved in the development and implementation of energy programs.

The outputs of the project include:

1. A system for the regular acquisition, processing and dissemination of information about energy. The system has three components:

a) Policy Analysis - a comprehensive but relatively low-cost computer-based system which will enable the GODR to: 1) gather statistics on various dimensions of the energy problem; 2) update this information on a regular basis; and 3) analyze and present information by methods and in formats which decision makers in the public and private sectors will find relevant and useful. This component is designed to assist particularly in the development of National Energy Plans.

b) Technical Information Transfer - identification of useful technical energy information sources in the United States and elsewhere and establishment of access to those sources.

c) Information Outreach - initiation of a program to provide Dominicans in all walks of life with access to technical and statistical information on energy in easily usable forms such as reports, publications, books, and computerized information printouts. Information will cover new energy technologies and conservation techniques, conversion efficiencies, energy saving construction techniques, energy economics data, etc.

2. Technical assistance and Training, including:

a) A study of energy training needs in the public and private sector and a plan for meeting those needs over the next 2 and 5 years.

b) A program, organized and implemented jointly by the Energy Commission and University of Maure y Maestra in Santiago, of one week mini-courses on technical energy topics.

c) Long and short term technical assistance and training to fill immediate requirements in energy project planning, design and management and technical areas which can not be met from other sources.

The inputs of the project include:

	$ Thousands - (Non add)		
	AID	GODR	TOTAL
1. Energy Information System	480	195	675
Policy Analysis	(380)	(170)	(550)
Technical Information Transfer	(50)		(50)
Information Outreach	(50)	(25)	(75)
2. Technical Assistance and Training	234	45	279
Training Needs Study	(40)	(5)	(45)
Mini-Course Program	(100)	(10)	(110)
Long and Short Term T.A. and Training	(94)	(30)	(124)
3. Project Evaluation	20	10	30
4. Contingency	30	10	40
TOTALS	764	260	1,024

D. DAEC Issues

The following suggestions were made in the DAEC guidance cable:

1. Logframe needs elaboration and restructuring to avoid redundancy.

The Logframe has been revised for this purpose (Annex A

2. The Project should include as a specific Project output the development of a National Energy Plan.

The Project is designed to assist the development of National Energy Plans. Because the Project provides the most important, but not necessarily all, the inputs required for the development of National Energy Plans, it was decided not to include such plans as specific Project outputs, but rather as a Project sub-goal.

3. The Mission should consider providing additional T.A. and training to improve policy implementation capabilities of Dominican agencies.

The Project will finance both a Training Needs Study and Plan and limited long and short term training to meet the most immediate needs identified by the Study and Plan. The Project is not intended to address all training needs identified, but rather to initiate a sustained training and technical assistance effort in the area of energy to be continued under future AID projects (III, B, 2). Funds for T.A. and training, for example, will be provided in the FY 81 Energy Conservation and Resource Development Grant.

4. The pros and cons of using NTIS as a technical energy information channel should be considered.

The project will finance technical assistance to survey NTIS and other technical information bases, recommend which are most appropriate and establish access to those recommended through acquisition of computer tapes or other materials (III, B, 1, b).

5. The objectives and procedures for the Information Outreach Study should be outlined.

The Information Outreach Component is designed to assure that information provided through the Energy Information System benefits a wide range of Dominican decision makers in the public and private sectors. The Outreach Study, which will be carried out by the Energy Commission with outside consultant help, will determine the kinds of

energy information needed and the most appropriate methods of channeling that information to public and private groups. As part of the Study, workshops will be held in which opinion leaders from various walks of Dominican life will discuss the above questions and agree upon an Information Outreach Plan to be implemented by the Energy Commission (III, B, 1, c).

6. A computer specialist should assist in development of the PP.

A computer specialist was provided by SER/DM for five weeks to help examine computer software and hardware options, telecommunications feasibility and help prepare the Technical Analysis for the PP.

D. Participants in Project Development

USAID Project Committee

Philip Schwab	Director
Ronald Venezia	Assistant Director
Charles Blankstein	CRD
Allen Merrill	CRD
Rafael Genao	CRD
Kenneth Ellis	ARDO
Ronald Trostle	ARDO
Gary Kemph	ARDO
Felipe Manteiga	ARDO
Rose Veith	PRG
Henry Welhouse	PRG
Joe Hill	CONT
Cecile Adams	CONT
Rudolph Fascell	MGT
Stan Mashakas	SER/DM

Embassy Staff

Charles Ries	ECON
Herbert Yarvin	ECON

GODR

José Ramón Acosta	Executive Secretary, National Energy Policy Commission
Franklyn Viloria	National Energy Policy Commission
Elba Musalen	National Energy Policy Commission
Norberto James	National Energy Policy Commission
Enriquillo Ureña	National Energy Policy Commission
Francisco Castillo	Undersecretary of Industry and Commerce
Joaquín Santaella	INDOTEC
Gil Manuel Canario	INDOTEC
Leonardo de León	Central Bank
Melvin Mañón	Central Bank
Altagracia de Castillo	State Sugar Council
Rhadhamés Mejía	Vice Rector, University of Madre y Maestra
Isabel de Ceara	Instituto Superior de Agricultura
Emil Bodden	Dominican Electricity Corporation
Ruben Núñez	Secretariat of Agriculture

Inter-American Development Bank

Leonardo Da Silva
Ricardo Vargas Taylor

II. BACKGROUND

A. The Energy Problem in the Dominican Republic

Energy is clearly one of the most serious problems facing the Dominican Republic. The country's heavy dependence on imported petroleum, together with increasing energy demand and rapidly rising fuel costs, have placed a severe strain on the balance of payments and development of the economy as a whole.

At present, about 67 percent of all energy consumed in the Dominican Republic is derived from imported petroleum (see Table 1). Petroleum products are imported from Venezuela and the Dutch Antilles, primarily in the form of reconstituted crude oil which is refined at the national refinery (50 percent government owned). Local refining helps somewhat to mitigate the cost to the country of finished petroleum products. Nevertheless, the amount spent annually on imported petroleum has increased by almost 2,000 percent in the last decade and is expected to increase a great deal more if current supply and demand patterns are not altered significantly. In 1979, petroleum represented 29 percent of all imports, whereas ten years ago it represented only 8 percent (see Table 3). The drain of petroleum imports on the national economy, of course, is reducing the availability of resources which might otherwise be directed toward developmental and basic human needs programs.

Other sources of energy in the Dominican Republic include: bagasse, used for most of the energy requirements of the sugar industry; firewood, which remains the principal energy source in rural areas; and charcoal (see Table 1). Although hydropower potential in the country is substantial, and the government is planning to emphasize development of hydroresources over the next five years, at present hydropower represents only 10 percent of all electricity generated and only about 1 percent of all energy consumed. Explorations for oil, coal and geothermal reserves within the country, which have been underway now for several years, have not yet resulted in any significant finds.

TABLE 1

ENERGY SUPPLY IN THE DOMINICAN REPUBLIC - 1978

(Thousands of barrels of oil equivalent)

	Amount	%
Petroleum and Derivatives	14,504	67
Hydro	171	1
Bagasse	4,143	19
Wood	2,513	12
Charcoal	282	1
TOTAL	21,613	100

TABLE 2

ENERGY CONSUMPTION IN THE DOMINICAN REPUBLIC - 1978

(Thousands of barrels of oil equivalent)

	Amount	%
Industry	7,838	45
Domestic	3,968	23
Transportation	3,380	19
Mining	1,980	11
Other (Commercial, government, etc.)	286	2
TOTALS	17,451 1/	100

1/ Total supply and demand differs as a result of conversion and line loses.

TABLE 3

PETROLEUM IMPORTS AS A PERCENTAGE OF TOTAL IMPORTS

(RD$ Millions)

Year	Petroleum Imports	Total Imports	Petroleum Imports/Total Imports (%)
1969	17.6	217.2	8
1970	18.2	278.0	7
1971	24.4	309.7	8
1972	33.0	337.7	10
1973	42.3	421.9	10
1974	153.5	673.0	23
1975	168.5	772.7	22
1976	171.1	763.6	22
1977	187.8	847.6	22
1978	199.0	859.2	23
1979	306.4	1,055.0	29
1980	500.4 1/		

1/ Embassy estimate as of July, 1980. No detailed GODR projections of petroleum import volumes and prices for 1981 and thereafter have been developed. The project is designed in part to help remedy this problem.

TABLE 4

PETROLEUM IMPORTS AND BALANCE OF PAYMENTS

(RD$ Millions)

Year	Petroleum Imports	Balance of Payments (Current Account)
1969	17.6	- 81.9
1970	18.2	-125.2
1971	24.4	-124.1
1972	33.0	- 47.6
1973	42.3	- 97.9
1974	153.5	-242.4
1975	168.5	- 74.5
1976	171.1	-241.9
1977	187.8	-264.0
1978	199.0	-375.5
1979	306.0	-397.0
1980	500.4	

1/ Embassy estimate as of July, 1980.

The problem of rising prices and energy shortages is also having a direct impact on low income groups in the Dominican Republic. Whether in the form of electricity, heat or motion, energy is a vital resource which is basic to development - essential to health, productivity, employment and other basic human needs. Electricity, for example, is used by low income groups for pumping water, powering small industrial and food processing activities, running irrigation pumps, refrigerating foods and medicines, operating health facililties and for domestic purposes. As the cost of generating electricity increases with the rising cost of imported fuel (almost 90 percent of electricity generation in the country requires imported petroleum), electricity becomes less affordable, particularly for poorer people. It also becomes more costly to expand capacity to serve people in poorer, more isolated rural areas. Table 5 shows that there already exists a heavy bias in electricity consumption away from poorer, rural areas toward better off urban areas.

Another energy source in rural areas is kerosene, a derivative of petroleum. Currently, more than five times as many rural households rely on kerosene than electricity for domestic purposes (see Table 5). As petroleum prices have increased over the past few years, the price of kerosene has more than tripled despite subsidization by the GODR, thus pricing it out of the reach of some lower income families and placing a serious burden on the budget of many others.

TABLE 5

DOMESTIC ENERGY CONSUMPTION

1978

(Thousands of barrels of oil equivalent)

	LPG	Kerosene	Electricity	Wood	Charcoal
Urban	266	58	303	80	151
Rural	43	286	54	2,348	122
TOTAL	309	344	357	2,428	273

The principal energy source for low income families in the Dominican Republic is wood or charcoal. While this is essentially a renewable resource, the rate of usage is so high, and the practice of replanting so neglected, that the overall effect is a significant contribution to deforestation. With access to other affordable energy sources inhibited by scarcity and rising prices, reliance on wood and charcoal is increasing. This in turn is further reducing the availability of wood fuels and thus increasing their price.

In sum, dependence on imported fuels and rising costs of both foreign and domestic energy sources are reducing the availability of affordable energy to A.I.D.'s target group, with adverse consequences in terms of health, welfare, productivity and other basic human needs.

B. GODR Response to the Energy Problem

The Government of the Dominican Republic recognizes the seriousness of the energy situation and has taken some important steps to address the problem. A high level of awareness has developed within most government agencies about the need to initiate or reorient programs to deal with energy-related issues. The overall stated goal of the government in the area of energy is to reduce the dependence on imported oil while maintaining insofar as possible balanced and equitable economic growth. No target for oil import reductions has yet been specified.

Until recently, government actions to reduce dependence on imported petroleum have tended to be carried out by individual agencies somewhat in isolation, aimed at particular aspects of the energy problem. For example, to conserve energy in the transportation sector, the President has prohibited the importation of automobiles costing over $4,000 and placed graduated registration taxes on cars according to cylinder size.

The Dominican Electricity Corporation (CDE) has created a new Department of Alternative Resources.

The Central Bank's Fund for Investment in Economic Development (FIDE) has adopted a policy of preferential treatment for loans which are used to finance new energy saving processes in industry and agriculture or the production of alternative energy devices. Although the FIDE policy has been in effect for almost a year, and substantial funds are available for lending in this area, very few loans have actually been made. The lack of demand for credit can be explained in part by the fact that very few enterprises have access to good information about what improved processes or technologies are available and feasible from an economic as well as technological point of view. A lack of tax and other incentives may also be partly responsible.

The government has allowed the national refinery to pass through to consumers the increased cost of imported petroleum, so that the price of gasoline per gallon has risen from $.51 in 1973 to $.99 in 1977 to $1.85 in 1979, and finally to $2.40 in 1980. The public protests which have accompanied most of the price increases, particularly the one in August 1979 which resulted in a general taxi cab strike, demonstrations, and 8 persons killed, underscore the sensitivity of using pricing policy as an energy saving measure.

Potentially the most important step to address the energy problem taken by the government thus far has been the establishment of a National Energy Policy Commission. The Commission was created by Presidential decree in January, 1979, although it did not begin to staff up or begin operations until the fall of 1979. At the highest level, the Commission is made up of the heads of principal government agencies and is chaired by the Secretary of State for Industry and Commerce. Most of the day-to-day activities of the Commission, however, are carried out by its staff under the direction of an Executive Secretary. At present, the Commission receives an annual operating budget of $1.2 million and has hired about 31 of a planned total of 35 employees. It should be fully staffed by the fall of 1980.

The purpose of the Energy Commission is to coordinate the energy-related activities of different public sector agencies, analyze the national energy situation, identify appropriate areas for public and private investment, and recommend to the President specific energy policies and programs. The overall mandate of the Commission is to develop a comprehensive approach to dealing with the energy problem - in effect, to develop a national energy plan. This is an ambitious, but worthwhile and necessary undertaking, which the Mission views as a very positive development in the government's efforts to deal with the energy situation.

Although the specific powers of the Commission vis-a-vis other public sector agencies are still being defined, the Commission does appear to have the potential to influence the energy situation in a significant way by educating and motivating public and private leaders, encouraging energy policies which are appropriate in light of the overall energy situation and working with other institutions in the development and implementation of specific energy programs. The work of the Commission thus far has been of a very high caliber and the staff appears to be both competent and sensitive to political and bureaucratic realities. The influence of the Commission should continue to grow as it further develops its informational, analytical and technical capabilities.

Although still quite new, the Commission has already begun to evolve a strategy or approach for addressing the energy problem and achieving the government's overall goal of reduced dependence on imported petroleum. The approach involves, in addition to major investments in large scale hydroelectric facilities, two principal areas of activity - 1) conservation - the more rational, efficient use of available energy in homes, industry, agriculture, transportation, and other sectors of the economy, and 2) development of alternative indigenous energy resources - solar energy, wind, mini-hydroresources and biomass (trees, plants, bagasse and other agricultural and animal wastes) which can be substituted for petroleum based energy.

The work of the Commission in further developing and implementing this approach will involve a range of specific tasks, including analysis of how energy is utilized in different sectors of the economy, investigation of energy conservation techniques and the feasibility and relative cost of alternative energy technologies, analysis and selection of policies to promote the adoption of conservation techniques and alternative energy technologies, and collaboration with other public sector agencies, universities and the private sector in the development and implementation of specific energy programs.

To carry out these activities effectively, the Commission and the agencies with which it works will require reliable information on energy supply and demand throughout the economy, energy prices and price trends, resource availabilities and costs, and potential changes in energy supply and demand under different economic and policy assumptions. This information will be needed to assist in allocation, pricing and other energy policy decisions, in the identification of appropriate areas for public and private investment and in the implementation of specific energy programs. The information will also be useful in determining the results of government policies and measuring the effectiveness of specific programs undertaken.

In addition to good information, the staff of the Commission will also need considerably improved skills in information management, policy analysis and planning, project design and implementation, and technical understanding of alternative energy and conservation techniques.

Other public sector agencies, such as the Secretariat of Agriculture (SEA), the National Forestry Agency (FORESTA), the Dominican Institute of Industrial Technology (INDOTEC), the State Sugar Council (CEA), the Dominican Electricity Corporation (CDE), the Technical Secretariat of the Presidency, the Central Bank and the universities, will also need to upgrade the skills of their staffs in these areas, since they ultimately will be responsible, in collaboration with the

Energy Commission, for the funding and execution of the majority of energy programs.

The GODR fully recognizes the needs described above. In its recently published Work Program for 1980, the Energy Commission identified the development of human resources and the establishment of an energy information base and system for up-dating and utilizing energy information as the highest priority tasks for the year, and the government has requested assistance from A.I.D. in both these areas. This project is designed to respond to these needs.

C. USAID Energy Assistance Strategy

1. Introduction

USAID energy assistance is still being developed, although the main lines of its development and probable direction are clear.

The goal of the Mission's strategy, like that of the GODR, is to help reduce the nation's dependence on imported fuels and increase the availability of energy to low income groups. The Mission believes that this goal can best be achieved by supporting the government's efforts to encourage energy conservation and efficient resource management and development and utilization of indigenous energy resources. We do not foresee a role for AID in financing major power generating facilities. Rather, USAID strategy focuses on selected activities which are relatively low cost and appear to have potential for significant pay-off. These include:

i) Assessing the current and projected energy situation;

ii) Improving the GODR's information base and institutional capacity to plan and implement energy policies and programs;

iii) Support for specific programs with significant potential for energy conservation and for alternative energy production.

As the program is still being developed, some discussion of the antecedents would be useful.

2. Antecedents

USG involvement in the energy sector began in late 1978 with the encouragement of visits to the Dominican Republic by public and private energy experts. Several American political figures (including

Congressmen Wydler and Ottinger) also helped to encourage U.S. efforts to assist institutions involved in energy in the Dominican Republic. Considerable effort was made by the Embassy to alert the GODR to the energy problem and to promote the establishment of the Energy Commission.

Beginning in 1979, USAID took several steps toward a major energy effort. The program has evolved rapidly thanks in large part to flexible and effective assistance in financing through LAC, DSB and Caribbean regional projects.

Through participation in the Caribbean Regional Alternative Energy Project, $350,000 was made available to initiate a Solar Bagasse Drying Project. This activity, important because of its energy saving and economic potential, has produced added dividends for both the Energy Commision and USAID by placing both organizations in a position of producing specific, positive action in the energy field.

Under the LAC Regional Energy Resources Development Project, a $30,000 grant was made to the Energy Commission to help initiate its operations. The grant is being used to study the potential for energy farms in the Dominican Republic, including a feasibility study for a specific test site capable of generating 5-50 MW of electricity fueled by fast growing trees.

The Mission also began to work with the Energy Commission following its establishment on development of a National Energy Assessment. A small centrally funded AID energy study was converted into part of a much broader National Energy Assessment effort and was augmented by an additional $250,000 provided under the LAC regional energy project. This assessment is underway and will provide an important basis for the Energy Commission's overall program.

The Peace Corps is also active in the energy field in the Dominican Republic through a recently initiated study of energy use in rural areas.

3. The Role of the Project in USAID Strategy

The project proposed herein represents a transition in USAID's energy program from initial ad hoc efforts to support GODR energy activities to a more systematic bilateral program focused on conservation and alternative resource development. This project, together with the Assessment, establishes the informational base and institutional capacity to develop and implement activities to be financed under future energy projects, including the $5.0 million FY 81 AID grant, and to ensure that those activities are carried out within a sound policy framework.

The development of USAID's energy program can be presented in summary form as follows:

ENERGY PROJECT ACTIVITIES

Activity	FY 79	FY 80	FY 81
Assessment of Energy Situation		Energy Assesment	
		Energy Information System 1/	
Institution Building		Energy Training Needs Study 1/	
		Energy Information System 1/	Training 2/
		Technical Information Transfer 1/	Information Outreach 2/
		Information Outreach 1/	
		Training 1/	
Pilot Projects	Solar Bagasse Drying		Specific projects in energy conservation, and development and promotion of alternative energy sources, particularly in rural areas - to be determined in part on basis of results of Assessment. 2/
	Tree Farm Study		

1/ To be financed under project proposed herein.

2/ To be financed under FY 81 $5,000,000 grant.

4. Future of USAID Energy Program

The Dominican government is highly interested in the energy problem, enthusiastic about the possibility for dealing with it and willing to run some risks to develop effective solutions. At the same time, it does not yet have a powerful, centralized policy-making and implementing institution for energy. In this operating environment, USAID can play an important role in supporting key initiatives of various institutions as well as helping the Energy Commission to become an effective technical organization capable of recommending, influencing, and implementing energy policies.

Future AID energy assistance will continue training and information outreach as well as support specific demonstration and promotional activities in energy conservation and alternative resource development, largely in rural areas. The private sector and the Dominican university community should also be drawn more deeply into energy activities. Several specific areas of activity under the FY 81 Energy Conservation and Resource Development Grant have been discussed with different GODR institutions and other donor agencies. Based on tentative agreements reached with these institutions, as well as on the preliminary findings of the Energy Assessment, it appears that the most appropriate areas for AID financing will include:

- industrial conservation;
- rural mini-hydro program;
- rural community biogas program;
- energy farm pilot project;

USAID/DR is particularly concerned about developing new approaches which can tie together energy, employment and basic human needs of the rural poor. The Assessment will be valuable in further defining the specific nature of energy activities in the near future.

D. Other Donor Activities

No other donor organization is currently planning assistance to the GODR in the areas of energy information, planning, policy development or institution building. Most programs being developed by other donors focus on research and demonstration of particular energy technologies. The IDB, for example, is developing two projects for

financing this year which focus on solar energy. The first involves an $80,000 feasibility study for a solar pond in the western part of the country. The pond, which would have an installed capacity of 5 MW, would also be constructed by IDB under a future project at a total cost of about $8 million. The second project involves a $397,000 grant to INDOTEC for the research and demonstration of solar applications such as solar drying, solar distillation, solar hot water heaters, solar cookers and solar power.

The Organization of American States (OAS) is financing a small project to help evaluate the amount of solar radiation and potential wind resources in the country.

The Latin American Energy Organization (OLADE) is continuing a study of geothermal potential.

The United Nations has recently financed a study of energy use throughout the sugar industry.

Japan is assisting CDE in upgrading the electrical distribution system of Santo Domingo and the government of West Germany is helping to repair some of the damage to CDE's hydro-electric facilities caused by Hurricane David.

The Ebert Foundation (West Germany) is financing studies to improve the thermal efficiency of sugar mills and evaluating the energy potential of agricultural wastes.

We are not aware of any projects being planned here by the World Bank over the next two years in the area of energy.

The Mission's energy assistance program is being developed in such a way as to avoid duplication and, if possible, to complement these on-going and planned activities of other donors.

III. PROJECT DESCRIPTION

A. Goal, Purpose, Outputs, Inputs

The goal of the Project is to help reduce the dependence of the Dominican Republic on imported petroleum and to increase the availability of affordable energy to low income groups in the country. A sub-goal of the Project is the development of National Energy Plans.

The purposes of the project are: 1) to establish a system for providing continuous, updated information necessary for developing sound energy policy and providing technical data to the public and private sectors; and 2) to upgrade the management and technical skills of the National Energy Commission, other public sector agencies and private groups involved in the development and implementation of energy programs.

The outputs of the project include:

1) A system for the regular acquisition, processing and dissemination of information about energy. The system has three components:

a) Policy Analysis - a comprehensive but relatively low-cost computer-based system which will enable the GODR to: 1) gather statistics on various dimensions of the energy problem; 2) update this information on a regular basis; and 3) analyze and present information by methods and in formats which decision makers in the public and private sectors will find relevant and useful. This component is designed to assist particularly in the development of National Energy Plans.

b) Technical Information Transfer - identification of useful technical energy information sources in the United States and elsewhere and establishment of access to those sources.

c) Information Outreach - initiation of a program to provide Dominicans in all walks of life with access to technical and statistical information on energy in easily usable forms such as reports, publications, books, and computerized information printouts. Information will cover new energy technologies and conservation techniques, conversion efficiencies, energy saving construction techniques, energy economics data, etc.

2) Technical assistance and training, including:

a) A study of energy training needs in the public and private sector and a plan for meeting those needs over the next 2 and 5 years.

b) A program, organized and implemented jointly by the Energy Commission and University of Madre y Maestra in Santiago, of 1 week mini-courses on technical energy topics.

c) Long and short term technical assistance and training to fill immediate requirements in energy project planning, design and management and technical areas which can not be met from other sources.

The inputs to the project include:

$ Thousands - (Non add)

	AID	GODR	TOTAL
1. Energy Information System	480	195	675
Policy Analysis	(380)	(170)	(550)
Technical Information Transfer	(50)		(50)
Information Outreach	(50)	(25)	(75)
2. Technical Assistance and Training	234	45	279
Training Needs Study	(40)	(5)	(45)
Mini-Course Program	(100)	(10)	(110)
Long and Short Term T.A. and Training	(94)	(30)	(124)
3. Project Evaluation	20	10	30
4. Contingency	30	10	40
TOTALS	764	260	1,024

B. Project Activities

1. Energy Information System - $675,000

The principal activity of this project is the establishment of a system for the regular acquisition, processing and dissemination of information about energy. The system has three components: 1) Policy Analysis; 2) Technical Information Transfer; and 3) Information Outreach. Managed and operated by a competent staff, the system will provide an effective means for getting energy information in useful forms into the hands of a wide range of decision makers in the public and private sectors.

The need for reliable energy information is inherent in the rising proportion and absolute size of the country's gross national product expended on energy. The rising cost of energy has changed the shape of economic, social, and political decision making in the Dominican Republic as it has throughout most of the world. Energy costs once marginal to all but a very few public and private decisions have become central and crucial to a wide range of problems. The increasing importance of energy costs relative to other costs requires that Dominican decision makers have reliable information to make sound decisions on investment, operating costs, prices and other policy issues. In a country as short of financial resources as the Dominican Republic, uninformed decision making about energy questions can be particularly costly. The cost of the development of a system for providing reliable information is small relative to the potential costs of ill-informed decisions.

a. Policy Analysis - ($550,000)

The primary purpose of the policy analysis component is to assist government decision makers in developing a comprehensive, authoritative statistical picture of the energy situation necessary for understanding energy problems and in analyzing energy policy and investment options and their potential effects. The Policy Analysis component will ultimately assist in the development of comprehensive National Energy Plans. Such plans are considered a very important sub-goal of the Project. It was with the objective of developing National Energy Plans that assistance for this Project was first requested. Because the Project is designed to provide the most important, but not necessarily all, the inputs required for the development of National Energy Plans, it was decided not to include such plans as specific Project outputs, but rather as a Project sub-goal. The first National Energy Plan, detailing government policies and investment programs for the calendar year 1982, will be assisted specifically by this Project. It is expected that the Plan, upon approval by the President, will be used by the Technical Secretariat of the Presidency and the National Planning Office in assigning budget allocations to different agencies as well as in serving as a guideline for legislative measures in the energy area.

The Policy Analysis component builds on the Energy Assessment which is now underway. The Assessment is designed to provide:

- Baseline data on energy supply and demand organized on the basis of the Brookhaven Reference Energy System.

- Recommendations regarding the kind of information which will have to be updated periodically following the Assessment, the frequency with which that will have to be done, and the sources and institutions from which the information will have to be gathered.

- Recommendations regarding appropriate areas for government, AID and other donor research and investment activity, including recommended approaches to specific problem areas. (See the Assessment Scope of Work Annex 2.)

The Policy Analysis component of this project is designed to pick up where the Energy Assessment leaves off. It establishes a procedure for updating and utilizing necessary energy information on a continuing basis. If information gathered under the Assessment is not updated and improved periodically, it will become increasingly less reliable and less useful over time. Updating and analysis of information is also considered necessary to determine important trends in supply and demand and projecting potential changes resulting from government policies and programs.

Because of the need to update and effectively utilize information gathered under the Assessment, it is important that the Energy Information System be established as soon after the Assessment is completed as possible. The Assessment is currently scheduled for completion at the end of August, 1980. The Mission, therefore, considers it important that the proposed project be authorized and underway no later than September 30, 1980.

The Energy Commission and other government institutions fully recognize the necessity of energy information as a policy tool and are currently engaged in efforts to gather energy data from other agencies and private sources. Data gathered, however, tends to be inconsistent, sporadic, difficult to work with in the aggregate and incomplete in terms of what is needed for policy analysis purposes. The policy analysis component of this Project will establish a more efficient, economical way of gathering energy data which is reliable, consistent, and meets the policy analysis needs of the Energy Commission and other agencies. The Mission's approach in developing this component is to insure that information gathered is useful for policy analysis purposes from the policy makers' point of view. Data collection and analysis will be carried out with a view to assuring that certain types of decisions can be illuminated by the data gathered, rather than

starting with a massive collection of data and an analytical apparatus which, once established, will seek customers. The kinds of questions which the System would be designed to answer include:

> If current trends persist, how much of the gross national product will be spent on energy in 1990? In 2000? Under different assumptions of economic growth, how would those expenditures be distributed among different sectors of the economy?
>
> If the price of a gallon of gasoline at retail is raised by one dollar, what would be the effect on the costs of sugarcane production? rice production? transportation of a ton of cargo from Santiago to Santo Domingo?
>
> What would be the effect on energy costs to the economy of investment in a second petroleum refinery? Of an equivalent investment in a series of mini-hydro installations? Of conversion of oil burning facilities to coal? Of a tree farm and associated power plant feeding electricity to the national grid? Of large solar bagasse drying installations for onsite electricity generation at sugar mills?
>
> How much petroleum could be saved by the introduction of solar hot water heaters in middle and upper class homes?
>
> If power line loses were reduced by 50 percent in selected areas of the country, who would be benefited and how much?
>
> Should investment in buses to conserve gasoline be focused on inter-city or intra-city transportation?
>
> Who benefits and how much from alternative investments in small electric plants in isolated villages versus larger installations feeding power into the national grid?
>
> Who benefits and how much from the current subsidy on diesel fuel prices?
>
> If amounts of farmland are committed to growing crops for energy production, what will be the effects on food production and nutrition? on prices of small farm food crops?

What are the tradeoffs between processing sugar cane into gasohol to reduce petroleum imports or processing cane into sugar for export to earn foreign exchange to buy petroleum?

In calculating the economic feasibility of certain small farm technologies, what assumptions should be made about prices of fuel and petroleum-based farm inputs such as fertilizers, herbicides and pesticides?

The Policy Analysis component involves three interrelated activities:

i) A system of data collection and processing;

ii) A computer program for organizing and analyzing that data; and

iii) A staff capable of managing and operating the Information System.

Each of these activities is essential to the Policy Analysis component and will be developed simultaneously.

i) Data Collection and Processing - ($180,000)

A team of outside consultants will be contracted to work with the Energy Commission staff in establishing a procedure for the periodic gathering and processing of energy data from public and private sources. The first step in this effort will be to review the methods by which information is currently gathered by the government, to determine whether current reporting procedures are adequate, whether energy reporting requirements could be "piggy-backed" onto existing reporting requirements, or whether additional surveys or reporting requirements are needed. From the industrial sector, for example, it may be possible to determine energy consumption from tax, census or other data currently collected, whereas to gather reliable information on the efficiency of energy use - i.e., wastage and conservation potential - may require periodic surveys. Experience gained under the Energy Assessment will be summarized in the form of specific recommendations regarding information requirements and provide a good head start in understanding the ways in which different kinds of information can be gathered by the government.

Once it is determined how information can best be collected on a regular basis, the consultant team, together with the Energy Commission staff, will design specific questionnaires, reporting forms or other instruments to be utilized. Questionnaires used in survey

work under the Assessment may be appropriate, with some modifications, for periodic updating of information.

After specific data gathering instruments have been developed, it will be necessary to establish the institutional and other arrangements necessary to effect regular collection of information by the Energy Commission. To the extent that periodic surveys of different sectors of the economy will be required, responsibility for undertaking these surveys will be assigned and interviewers trained. If legislative or Presidential action is required to implement certain reporting requirements on the part of industries, households or other public sector agencies to the Energy Commission, this will also be recommended.

The Consultant Team will be responsible, together with the Energy Commission, for seeing that these institutional arrangements and data gathering procedures are implemented during the first annual updating of information, approximately one year after the Assessment is completed.

Once information is gathered and channeled to the Energy Commission, it will have to be tabulated and organized in such a way that it can be fed into the computer program (see below). The Consultant Team will provide training to the Energy Commission staff for this purpose.

It is estimated that a total effort of 18 man months of outside technical assistance will be required for establishing the data collection and processing procedure, to be provided over a period of approximately 18 months ($120,000). In addition, Energy Commission staff time and local materials costs amounting to $60,000 will be required for this effort.

ii) Computer Program - ($170,000)

Energy data gathered by the Commission will be most useful to decision-makers if it can be organized, manipulated and presented efficiently. For this purpose, a computer program appears to be essential. The program must be oriented to the kinds of policy decisions which the Commission and other agencies are likely to be grappling with and must have the capability to structure and manipulate information in such a way as to be directly relevant to those decisions.

The computer program which appears to have the capability to answer questions such as those listed above, and is thought to be the most appropriate for the Energy Information System, is the AL-EDIS program being developed by Stoneybrook University and Brookhaven National Laboratory for the Saudi Arabian financed Al Dir'iyyah

Institute. The AL-EDIS program is based on the Brookhaven Reference Energy System which is also the basis of the Assessment. It is being developed specifically for use by developing countries in organizing and analyzing large amounts of energy data for policy purposes. A key feature of the program is its ability to present in graphic form complex energy supply-demand balances, future year projections and energy relationships among different sectors of the economy in such a way that they can be easily understood, even by non-technical policy makers.

An independent review of alternative programs to AL-EDIS, carried out with the assistance of SER/DM, has led the Mission to conclude that no program has been or is currently being developed with comparable capabilities or usefulness for policy analysis purposes in the Dominican Republic. (See Technical Analysis.) The possibility of developing an entirely new program from scratch has been considered but has been rejected as unnecessarily costly, time consuming and unlikely to result in program capability significantly more appropriate than that of AL-EDIS.

The AL-EDIS program is being developed so that it can be set up on tapes on a mini-computer in developing countries, thus eliminating the dependence, unreliability and costs associated with accessing the program through a telecommunications link to a main frame computer in the United States or elsewhere. An additional advantage of setting up the AL-EDIS program on a local mini-computer is that the software can be modified as necessary to perform certain functions considered of higher importance locally, as well as to meet other specific local needs. While the option of a telecommunications link between a terminal at the Energy Commission and a computer in the U.S. has been examined in detail (see Technical Information Transfer B.1.b and Technical Analysis), it has been rejected on economic and technical grounds as well as because of limitations in overall capability and flexibility.

Since the AL-EDIS program is designed primarily for the storage, manipulation and presentation of country specific energy data, its usefulness as a policy analysis tool is dependent upon the availability and introduction of that data into the program. The National Energy Assessment will provide the basic data set for this purpose and the data gathering and processing activity described above (B.1.a.i) will ensure that the data is updated on a regular basis. An attractive feature of AL-EDIS is its ability to perform sensitivity analysis regarding the importance of certain missing information, so that the value of obtaining additional detailed information can be determined, and certain types of analysis may proceed with accuracy even before detailed information is obtained. Once data is processed into simplified formats by hand, it can be entered into the AL-EDIS program using fairly straightforward computer data entry procedures.

The AL-EDIS software package will be ready for setting up in developing countries in February, 1981. Because development of the package has been financed by the Al Dir'iyyah Institute, there will be no cost to developing countries of AL-EDIS software development or acquisition.

The computer hardware requirements and options for utilizing the AL-EDIS program have been examined in detail with the assistance of SER/DM. First, all in-country computer capability, both currently existing and planned for the near future, has been examined with a view to determining whether AL-EDIS can be set up locally without procuring additional computer hardware. It has been determined that existing or planned hardware is not appropriate for using AL-EDIS, either because of limitations in capability or incompatibilities with the software used in the AL-EDIS program. (See Technical Analysis.) One reason for this is that AL-EDIS has been developed in such a way that it can be used most efficiently and cost-effectively, without significant modifications, on the Prime mini-computer series.

Because of the lack of appropriate in-country capability, the Project will finance the procurement of a relatively low-cost mini-computer package necessary for efficient operation of the AL-EDIS program. The components and estimated costs of the required hardware and additional software are:

Mini-computer (including minimum necessary memory, disc, and tape capability and terminal with b+w screen)	$ 59,500
Extra terminal with b+w screen	$ 1,250
Color graphics demonstration display	$ 13,700
Line printer	$ 8,500
PASCAL or PL-1 Software (required)	$ 5,000
Magnetic Tape Drive	$ 12,000
Data base management software (required)	$ 20,000
Total	$119,950

These are list prices based on delivery, installation and checkout in the United States. It is expected that any additional costs of installation in the Dominican Republic will be offset by dealer discounts and price reductions between now and time of actual procurement.

The mini-computer package will be located in the offices of the National Energy Commission, thus allowing the Commission staff full time access to and use of the AL-EDIS program. It will be located in an area that will allow demonstrations of the program's capability as well as policy analysis workshops for both Commission staff and the staff of other institutions. Eventually, the hardware located in the Commission building can be linked by telephone hook-up to hardware elsewhere in the capital so that data bases (although not program capabilities) can be shared with other institutions such as SEA, the Central Bank, SEEBAC, and others as different computerized data bases are developed. This will be valuable not only in providing other institutions with basic energy data (see also Information Outreach), but also allowing the Commission ready access to data on crop production, fertilizer usage, educational activities, and other types of information relevant to energy decisions when performing energy analysis.

Installation of the mini-computer package in the Commission offices will require a number of site preparation activities to ensure a secure and sufficiently sizeable room to house the required hardware, air conditioning to meet required operating temperatures, sufficient electrical cabling and outlets, etc. The specific site preparation steps required are described in more detail in the Technical Analysis. The total expense of site preparation is estimated at $25,000 and will be borne entirely by the Energy Commission. Completion of the required preparation will be included in the Grant Agreement as a condition precedent to disbursements for any computer hardware. The Energy Commission has already developed architectural plans for the redesign of certain office space to house the mini-computer and is now developing an implementation schedule for site preparation activities.

The Commission will also be fully responsible for the costs of operating (paper, ink, discs, etc.) and maintenance of the computer package, estimated at $25,000 annually.

The procurement process for all computer hardware will begin as soon after the project begins as possible. Assuming a lead time of about 6-9 months, it is expected that all hardware will be in place and operating no later than June-July, 1981.

iii) Staff Development - ($200,000)

Essential to the Policy Analysis component of the Energy Information System are persons who know what kind of energy information is needed for policy analysis purposes and how to use that information to address specific policy problems and decisions - in sum to bridge the gap between information and policy. Most members of the Energy Commission staff have already begun to develop skills along this line. They are already active in developing policy and investment recommendations in several areas, gathering and working with whatever information is available. Several staff members participated in the structuring of the Energy Assessment in order to ensure that information gathered was relevant to policy purposes. Under the Information Gathering and Processing activity described above (B.1.a.i), additional training will be provided to staff members in the gathering and organizing of energy information to meet policy analysis purposes, as well as in the specific processing and tabulation procedures required for entry into the AL-EDIS program.

Several additional types of training will be provided under the Project to ensure effective application of the AL-EDIS program to policy decisions.

First of all, the Commission will hire two additional staff persons with backgrounds as computer programmers/ analysts. The more senior of the two will be familiar with all aspects of computer operation and have a strong capability in programming. The more junior will be familiar with basic data entry and retrieval procedures and have some limited programming experience. The capabilities and functions of each of these persons is described in more detail in the Technical Analysis.

Each of the two additional staff will receive 6 months of training as follows: Two months in the Stoneybrook Energy Management Training Program to become familiar with basic approaches to energy policy problems and utilization of energy information. Since this program is centrally AID funded by DS/EY, there will be no cost to the Project. Immediately thereafter will begin two months of intensive training, also at Stoneybrook University, in the operation and capabilities of AL-EDIS and its application to energy problems and decisions. Included will be training in helping policy makers define their information needs and formulating them in such a way that they can best be responded to by the program. While it takes only about one week to learn how to "operate" AL-EDIS, it is estimated that two months are required for thorough familiarization with the capabilities of AL-EDIS and its application to energy problems. Thereafter, two months of in-country training will be provided in initial aspects of setting up the Dominican Republica data base and applications to specific Dominican energy problems. The cost of training in Stoneybrook and in-country in the use of AL-EDIS will be approximately $50,000.

The two computer staff persons will also receive approximately 2 weeks of free training in familiarization and operation of the computer hardware from the vendor.

When fully trained, the computer staff persons will be expected not only to perform data entry and computer operation, but also to work with the rest of the staff of the Commission and the staff of other agencies in defining information needs and applying the AL-EDIS program to those needs. Since all computer hardware is expected to be installed sometime between April and July of 1981, it is necessary that the two additional staff persons be hired and commence training as soon as possible after the Project begins. The Energy Commission is already conducting a preliminary talent search for this purpose.

Given the potential problem of staff turnover, it is absolutely essential that the Commission take the necessary measures to attract and keep qualified computer personnel, particularly following the substantial investment in training to be provided. For this purpose, the Commission intends to require a minimum two year contract and to offer a salary structure fully competive with the private sector (using CODETEL salaries as a guideline), with salaries increasing significantly following training. Energy Commission salaries are not tied to government wide levels so that this flexibility exists.

Salaries for the two computer staff are estimated at about $18,000 and $12,000 per year, resulting in a total of $60,000 over the two year life of the project. The Commission will assume this as a Project cost.

The Grant Agreement will require as an initial condition precedent to disbursement that two additional staff persons have been hired by the Commission under the conditions stated above.

In addition to training for the computer staff, approximately ten other Commission staff persons will receive a one week course in basic familiarization with and operation of the AL-EDIS program, whether in Stoneybrook or in-country after the program is set up. This will allow them to perform basic data retrieval and analysis on the computer without having to rely at all times on the computer staff. The cost of this additional training will be $10,000.

Finally, in order to insure effective start up and application of the Computer Program during the very important first year after it is established, a resident technical advisor will be provided to the Commission for this period. The advisor will have a strong computer background and will be fully conversant with the AL-EDIS program and its application to energy problems and decisions. A recent post-graduate in computer sciences with concentration on energy programming would be most suitable. The advisor will work with policy makers and staff at the Commission and other agencies to define information requirements and insure that the computer program is utilized effectively to meet those requirements. He will work with the computer

staff of the Commission in data entry and manipulation, and applications of the AL-EDIS program. He will assist in the modification of software as necessary and will provide any further on the job training which is deemed to be appropriate. In sum, he will have the overall responsibility for seeing that the Computer Program is effectively established and utilized during its critical start-up stage. The total cost of this technical assistance will be $80,000.

b. Technical Information Transfer - ($50,000)

The second component of the Energy Information System is designed to establish access to technical energy information from a variety of sources, particularly in the United States. The U.S. Department of Energy, the Solar Energy Research Institute, the International Energy Agency, and many other institutions have established computerized data bases on the characteristics and costs of new energy technologies, international price, supply and demand trends, energy activities in other countries, energy saving construction techniques, energy conservation measures, energy use coefficients and other technical energy topics. This information can be extremely useful not only to the Energy Commission and other government agencies in their policy analysis efforts, but also to universities and private groups and individuals.

Two options have been considered for establishing access to technical data bases abroad. The first option involves a direct telecommunications link between the mini-computer at the Commission and the computer abroad on which the data base is set up. This would allow instantaneous querying and retrieval of information from the data base abroad. The feasibility and cost of this option have been examined in detail (see Technical Analysis). A telecommunications link could be established via telephone connection through CODETEL and satellite connection through COMSAT. The cost of establishing and utilizing such a connection, however, would be between $53,000 and $114,000 a year, depending on the amount of dedicated line reserved. One reason for the high cost is that no other entity in the Dominican Republic has yet established such a link via satellite and therefore cost sharing and reductions can not now be realized.

Given the very high costs of the telecommunications option, and the fact that other options for acquiring technical and generic data from abroad exist, such as the procurement periodically of batch data tapes, it does not appear to be cost-effective or appropriate to finance a telecommunication link under the Project. Furthermore, an on-line, interactive link to data bases abroad is not essential for the Energy Commission during the next two years. Following the Project, when the feasibility of a satellite link has been improved, the cost reduced and the demand for such a link increased, establishment of a direct telecommunications link may become appropriate.

As a more cost-effective alternative, the Project will finance the acquisition of technical data from different sources in batch form. Several technical data sources either currently have or are developing the capability to reproduce data bases on computer tapes for distribution. Such data bases could easily be set up on the Energy Commission mini-computer. Information could then be retreived directly in printed or graphic form, or, through some software modification, be combined with other data and used for analytical purposes.

The Project will finance $20,000 of consultant or service fees for the identification of available data bases abroad, evaluation of alternatives and recommendations of those most appropriate, and assistance in the procurement of tapes. An additional $20,000 is budgeted for the procurement and shipping of tapes or other data formats which can be entered into the mini-computer. Following the Project, the Commission will assume the continuing cost of tape procurement, which is expected to go down over time as production costs go down.

The Project will also finance $10,000 worth of training to Commission computer staff in software modification to utilize the technical data for policy analysis purposes.

c. Information Outreach - ($75,000)

The third component of the Energy Information System is an information outreach program. Information gathered by the Energy Commission under the Policy Analysis component and information made accessible through the technical information transfer component will be useful to a wide range of people who are dealing with energy problems throughout Dominican society.

People in all walks of life have a contribution to make to solving the energy problem and need to know about how the more efficient utilization of energy can benefit them individually. Dealing with the energy problem in the Dominican Republic requires that: 1) relevant information both technical and general is broadly disseminated; 2) people understand why energy problems are important to them; and 3) people know what kind of assistance they can get in dealing with energy problems.

The outreach component will operate in both the public and private sectors.

i. Public Sector

The Energy Commission will carry out a campaign to assure that decision makers and interested technicians within the government know what the Energy Information System is, how it works and how it can be useful to them. While those members of the Energy Commission staff working directly with the Consultant Team in the

establishment of the system should, by the end of the project, be well versed in its overall purpose and utility, other members of the Commission staff, as well as the staff of other government agencies, may not be familiar with the nature of the information available, the types of projections which can be made, the kinds of questions which can be answered, or other ways in which information provided by the system can be useful to their activities. For the purpose of educating government personnel in these areas, the Energy Commission will hold a series of seminars and workshops and also work with individual agencies in utilizing available energy information to help develop or implement particular energy programs.

The Commission will also publish and distribute to other public and private agencies a semi-annual resume of basic energy supply and demand information and projections. The first such report will be published in January, 1981.

ii. Private Sector

In the private sector, the Energy Commission, with outside consultant help, will initiate a study and planning activity to ensure that information made available through the Energy Information System is disseminated widely outside the government. Not all people in Dominican society can be reached the same way. The kind of information disseminated and the way it is disseminated will vary. Professional groups such as architects and engineers, for example, may best be reached through continuing education programs managed by professional associations. Truck and taxi owners may best be reached through direct mail. The man on the street or on the farm may best be reached by mass media or through organizations such as cooperatives, parent-teacher groups or other methods. How to communicate with people most effectively must be studied carefully.

This Project will not finance broad dissemination of energy information outside of the government. Rather, it will finance a study and detailed plan for such broad dissemination following the Project. As part of the study and planning activity, workshops will be held in which opinion leaders from various walks of Dominican life will be brought together to discuss the energy problem, how a broad-based information dissemination program could work and how relevant information provided through the Energy Information System can best be made available to different sectors of Dominican society. An important aspect of the outreach plan will be to assure that the Information System serves the needs of higher education institutions.

The Information Outreach Plan will be submitted to USAID for approval no later than the end of the first year of the Project. It is expected that the first measures under a broad information dissemination program in the private sector could be financed

either under the Mission's FY 1981 Energy Grant or under the DS/EY FY 81 Energy Assessment and Information Project.

A total of $50,000 is provided under the Project for six months of consultant services to the Commission in structuring and carrying out the information outreach activities described above, particularly development of the private sector dissemination plan. Required will be expertise in social communication and media techniques as well as background in energy information.

The Energy Commission will contribute approximately $25,000 in staff time and local materials (publications, slides, charts, seminar costs, etc.) to the Information Outreach component of the Project.

2. Technical Assistance and Training - $279,000

a. Energy Training Needs Study and Plan - ($45,000)

For dealing effectively with the energy situation, improved technical and managerial skills of various kinds are required within the Energy Commission, other public agencies, the universities, private industries, community organizations and other actors involved in energy related decisions and the implementation of energy programs.

There are different approaches to assisting organizations such as these in upgrading needed skills. On-the-job training, short courses, workshops, and seminars at home or abroad, long-term training, technical assistance, and formal education are among the possibilities. A substantial program in energy training is to be initiated under this Project and continued on a larger scale under the FY 81 $5.0 million Energy Grant. Before engaging in a major energy technical assistance and training program, however, the Mission considers it prudent to analyze further the overall question of what kind of skills are really needed, by whom, for what purpose and how those skills can best be provided. The specific skills needed by a particular agency, as well as the types of training best suited for meeting those needs, will depend in large part on the role of the agency in the energy area. The Mission is also aware of a growing number of international training opportunities being funded by AID/W, the UN, OAS, and other organizations and believes it is important to sort out which needs can best be met through these programs and which are more appropriate for bilateral AID financing.

The Project will therefore finance, as the basis for training activities to be financed under this and future projects, a study of energy training needs in the D.R. and development of a plan for meeting those needs over the next two and five years. It will first examine the functions and roles of different public and private sector

agencies in the energy area. The study will then identify the human resource skills needed to carry out the appropriate institutional roles effectively. The study will review the energy training opportunities available in both the Dominican Republic and abroad and, finally, recommend the specific types of training which appear most appropriate to meet the training needs identified. Recommendations will be presented in the form of a Training Plan to meet both immediate training needs over the next two years and longer term needs over the next five years. The Plan will be submitted to USAID for approval no later than 8 months after the Project begins.

The Project will finance approximately 4 man months of consultant services to the Energy Commission for the purpose of the Training Needs Study and Plan at a cost of $40,000. Commission staff time amounting to $5,000 will also be required for carrying out the Study and Plan.

b. Mini-Course Program ($110,000)

The Energy Commission and the University of Madre y Maestra in Santiago (UCMM) have jointly developed a proposed program of intensive one week mini-courses on technical energy topics for financing under the Project. The purpose of the program is to provide in-country training to a selected number of Dominicans in technical areas of highest importance even before the Training Needs Study is completed. The program is based on the premise that within the country there is a considerable amount of technical knowledge and experience - among university professors, government employees, and private individuals - which can be usefully shared through short training courses.

The courses will be jointly organized and administered by the Commission and UCMM. They will be conducted primarily in UCMM facilities in Puerto Plata to provide a sense of isolation and enhance the learning atmosphere. Each mini-course will last about 5 days. Instructors will include two local experts and one foreign expert, each selected on the basis of proposals submitted to the Commission and UCMM. Participants, who will be invited to attend the courses by the Commission and UCMM, will include university graduate students, government employees, and persons engaged in private technical practices. The object will be to invite individuals with a technical or policy orientation who will not only benefit individually from the courses, but also be able to spread the learning to colleagues or otherwise act upon the knowledge gained. Courses will be limited to 20-25 participants.

A total of six mini-courses will be conducted - one every two months for a year. If the program is highly successful, it may be appropriate to extend it with additional financing after one year.

The topics proposed for the first six courses are:

1. Climate and Architectural Design;

2. Architectural Design and Energy Conservation;

3. Design of Domestic and Commercial Systems for Solar Hot Water Heating;

4. Practical Applications of Wind Mills;

5. Commercial and Industrial Energy Audits;

6. Solar Air Conditioning: Consideration for the Design of Houses and Commercial Buildings.

The cost of each course is estimated to be $16,600, broken down as follows:

	Each Course	Total
Per diem for 5 days at RD$40 per day for 30 participants (including instructors and support personnel)	$ 6,000	$36,000
Local Transportation	600	3,600
Fees - Local Instructors (2)	1,000	6,000
Fees - Foreign Experts (1)	5,000	30,000
Transportation - Foreign Experts	1,000	6,000
Reproduction of Documents	1,000	6,000
General Administrative Costs (Coordination trips, audio-visual equipment, materials, etc.)	1,500	9,000
Contingency	500	3,000
TOTAL	$16,600	$99,600

Also included in the Project cost will be $10,000 of staff time of the Energy Commission and UCMM in organizing and administering the mini-course program.

c. Long and Short Term Training - ($124,000)

The long and short term training activity under the Project is designed to meet the most immediate needs identified in the Training Needs Study and Plan. The activity is not intended to address all training needs identified, which would require substantially more time and money than allocated to this Project. Rather, the activity is designed to initiate a sustained training effort in the area of energy to be continued under future AID projects.

The kinds of immediate training needs expected to be addressed under this Project fall into two areas. The first area involves general skills of project planning, design and management. This is particularly true of the Energy Commission, whose staff, although exceptionally bright and motivated, lacks experience in project development and implementation. The second area involves technical expertise in different alternative energy applications, such as solar energy and biomass, as well as in industrial, domestic and other conservation techniques.

Improved project planning, design and management skills, as well as more technical energy skills, will both be necessary in implementation of projects already planned by the Commission, including the AID $5.0 million Energy Conservation and Resource Development Grant proposed for FY 81. The AID project is intended to finance selected programs identified by the government as priorities within their national energy plans - both conservation programs and programs to demonstrate the feasibility of alternative energy technologies and encourage their utilization on a wide scale. These programs will most likely involve mini-hydro, wind and biogas technologies for use in rural areas, as well as a pilot tree farm activity. A major conservation activity being contemplated under the FY 81 Grant Project involves research and promotion by the Energy Commission of specific energy saving techniques and lower-cost alternative energy processes which could be adopted by Dominican industries with financing from the Central Bank. The Commission would disseminate the findings of its research throughout the industrial sector, perhaps in pamphlet form, and conduct demonstrations of the technological and economic feasibility of specific applications. Both the Central Bank and the Energy Commission are very interested in such a program, although it is recognized that additional expertise - i.e., training - in industrial conservation techniques will be required first. This includes an upgrading of the skills needed to diagnose current energy inefficiencies in particular industries and to recommend specific solutions or alternative approaches.

Because the opportunities for meeting immediate training needs in the Dominican Republic are somewhat limited, it is expected that the Training Plan will recommend and the Project will

finance the participation of a limited number of Dominicans in on-going energy management and research programs in the United States or other countries. These could include university graduate programs which involve research in energy applications, such as the solar crop drying program at Ohio State University or the biomass conversion program at the University of Wisconsin, as well as programs of private companies in gasohol production, biogas fermentation, photovoltaics, and industrial conservation techniques. Other possibilities are programs funded by the U.S. Department of Energy at the National Laboratories (Livermore, Los Alamos, Brookhaven, etc.), the Solar Energy Research Institute in Colorado and institutions in other countries such as the Las Gaviotas Center in Colombia or the National Center for Research and Technology (CONACYT) in Mexico.

The exact number of Dominican participants to be funded under the Project will depend on the length of training which is determined under the Training Plan to be appropriate. At the National Laboratories or private institutions, for example, one year of training or even less may be sufficient. Another possibility is to finance graduate research activities in the Dominican Republic or abroad by Dominicans now being trained under other programs.

Dominican participants will be selected from graduating university classes and from among the more junior staff members of the Energy Commission, INDOTEC, and other government agencies. All participants will be required upon their return to the Dominican Republic to work in public sector energy programs for a minimum period and to conduct seminars for colleagues on the kind of technical information and skills learned abroad.

An equivalent of 6-8 person years of training will be provided under the Project at a total cost of $94,000. Approximately $30,000 in GODR staff time and expenses will be required for the training.

C. Summary Financial Plan

	AID	GODR	Totals
I. Energy Information System			
1. Policy Analysis			
Data Collection and Processing			
Consultants	120,000		120,000
Local Staff/Materials		60,000	60,000
Computer Program			
Computer Hardware and Software	120,000		120,000
Maintenance		25,000	25,000
Site Preparation		25,000	25,000
Staff Development	140,000	60,000	200,000
2. Technical Information Transfer			
Consultants/Services	20,000		20,000
Data Acquisition Costs	20,000		20,000
Training	10,000		10,000
3. Information Outreach			
Consultants	50,000		50,000
Local Staff/Materials		25,000	25,000
Subtotal Energy Information System	480,000	195,000	675,000
II. Technical Assistance and Training			
1. Energy Training Needs Study	40,000	5,000	45,000
2. Mini-Course Program	100,000	10,000	110,000
3. Long and Short Term T.A. and Training	94,000	30,000	124,000
Subtotal Technical Assistance and Training	234,000	45,000	279,000
III. Project Evaluation	20,000	10,000	30,000
IV. Contingency	30,000	10,000	40,000
Project Total	764,000	260,000	1,024,000

IV. PROJECT ANALYSES

A. Technical Analysis

1. Introduction

The economic and financial problems as a result of the increased cost of energy in the past half decade have resulted in a convergence of unprecedented demand for the monitoring and management of energy information and the ability of computer-assited procedures to produce appropriate responses. Although computer generated maps for energy research are commonplace, sophisticated software coupled with hardware is needed to provide energy planners with a useful set of analytical capabilities and an attractive means of presentation.

Similar to other information systems, energy information systems must be designed to input and analyze data and output information that is useful for decision-making. In fact, a fully integrated energy information system should have subsystems for data acquisition, input storage, retrieval, analyses, output and eventual use. The system should represent the culmination of merging hardware developments, date base concepts, more efficient algorithms and accurate source materials.

Any energy information system must generate products that are more than pretty pictures displayed on fancy output devices. To be of real value, such automated systems must provide better information in a fashion that is faster or cheaper than conventional processes. Therefore, true benefits lie in the ability of automation to integrate complex information into new combinations and forms that provide additional insight into the decision making process.

The ability to purchase a totally integrated stand-alone information system is the objective of this effort and requires a survey of existing energy information systems or models, as well as evaluation of in-country processing capability. Some of the principal issues involved in establishing such an integrated information system center around the nature of hardware and software, user training and the availability of good energy data dependent upon intergovernmental cooperation.

Among the most important criteria in the design and implementation of an interactive system for data analysis are: data structure, control language, user interface, system versatility, extensibility, and portability. The design of an interactive information system, viewed as a set of constrained decisions based on these criteria, is discussed and pursued. For purposes of this paper, the term "interactive system for data analysis" refers to an automated information system which is capable of supporting a high level of efficient

man-machine interaction in data analysis, where the analysis calls for a sequence of decisions by the user based on the intermediate results of previous steps. "Data analysis" denotes any mode of analysis of real data in which the user fits the data to some tenative model, checks the theoretical and empirical adequacy of the model, makes revisions to the model and typically carries out several interactions of this exploratory process before settling on a final analysis.

Unlike certain routine business or data processing applications which, if done interactively, would require little more than a good remote job entry system, the execution paths of data analysis are much more diverse and tend to be different for different users even if they are analyzing the same problem. A well designed interactive system for data analysis will, at the very least, enable the user to attempt one or more interactions of data editing, plotting, transformation or new analyses without reinitiating the system or reentering the data values. Besides being flexible, versatile and numerically dependable, a good interactive system should provide its users with a variety of convenience features that are not feasible under a batch processing environment. This includes internally stored and easily retrievable documentation and bulk files, and error diagnostic and recovery services that detect spelling and logical errors and allow the user to correct them on line.

Within generally accepted design criteria, some suggested choices for energy information system development are given; many are based on subjective preferences either as a designer of interactive systems or as a user of interactive systems. To severely limit the tradeoffs of various design selection alternatives certain assumptions have been stated. Otherwise a lengthy discourse may be necessary over the choice of programming language alone or the selection of hardware, not to mention dozen of other choices over which there is unlikely to be universal agreement among computing experts. However, the actual choice is not nearly as important as the act of choice in light of the design objectives and in the face of the consequences of design decisions already made.

2. General Characteristics of the Energy Information System

2.1 The Choice of Analytical Methods (Software)

Once an interactive system has been written, even with provisions for modifications and extensions, it is without exception very difficult to alter the basic structure and characteristics of the system. The approach to designing an interactive system is presented in terms of making design decisions, possibly with conflicting constraints and objectives, but are resolved when subjectively weighing the criteria on which the decisions are based. Most of the features discussed are considered either desireable or highly desireable features for a workable interactive system.

Several agencies and institutes have established, or are in the process of establishing systematic frameworks for the analysis of energy problems. However, the information processing efforts within these bodies serve special purposes and present severe limitations to producing an energy information system specifically directed to the needs of policy makers in developing countries. These needs go beyond providing energy system statistics. For example, there is being created a national information and data center on solar energy at the Solar Energy Research Institute (SERI) in Colorado, to serve as a research tool and as a means for diffusing solar technology. However, this information system will only provide information relevant to decisions concerning solar energy options. The Energy Supply Planning Model (ESPM) developed for the National Science Foundation by the Bechtel Corporation provides a systematic way to determine the total direct resources required to design, construct, start up, operate and maintain energy conversion facilities. This model is ideal for manpower, equipment and financial analysis for the U.S., but requires modification for adaption to reflect LDC labor rates, productivity, importance of equipment and other conditions.

The analytical software package recommended for this project is the Al Dir'iyyah Energy Development Information System (AL-EDIS) prepared by the Institute for Energy Research at the State University of New York at Stoneybrook under a grant from the Al Dir'iyyah Institute of Geneva, Switzerland. The AL-EDIS program is developed specifically for use in developing countries and satisfies the need for an information model needed by economic and social planners to project energy demand and supply requirements on the basis of developmental goals in individual sectors of the economy. AL-EDIS organizes energy information at the local user level to help determine basic future needs both in rural and urban settings. The AL-EDIS program, based on the Reference Energy System (RES) developed by the Brookhaven National Laboratory for the Department of Energy, is an approach that integrates a set of estimated energy demands, conversion technologies, fuel mixes and resources into an overall energy supply/demand balance. This analytical approach is readily adaptable to optimization techniques in the future, so that the analysis of options affecting very specific uses of energy can be performed. This requires, of course, that demand portions be developed in considerable detail. In addition, policy makers can use AL-EDIS to determine the potential impact of new technological developments and alternative energy investments which is the kind of information needed to prepare national energy plans. In sum, the AL-EDIS energy information system is designed to provide a framework in which data can be organized and manipulated to serve the needs of energy sector planning. A further advantage of such an interactive system is its ability to provide technical users with more specialized modeling capabilities. This design approach has the advantage of being useful when used together with more complex and specific analytical models.

Such capability allow users to use the system in conjunction with optimization, input-output, and macroeconomic growth models where available. It is for these reasons that AL-EDIS is recommended for the information software package for this project. No other comprehensive information system has been designed to satisfy the total requirements of the project.

2.2 The Method of Processing (Hardware)

Many of the methods available for information system processing were developed in industrialized countries where skilled labor and technology are abundant or inexpensive and capital is readily available. The situation is essentially the opposite in the Dominican Republic. The selection of processing options therefore must be based on factors whgich are pertinent to that country.

One method for accessing the AL-EDIS program which has been examined in considerable detail is to establish telecommunications between a terminal in the Dominican Republic and a main frame computer in the U.S. The same terminal used to access the AL-EDIS program abroad could then be used by the Energy Commission to access other energy analysis models and data bases in the U.S. A disadvantage of this method is of course the total dependence on foreign computer capability.

A telecommunications link between the Dominican Republic and the U.S. would be technically feasible. The following diagram depicts how such a link could be established:

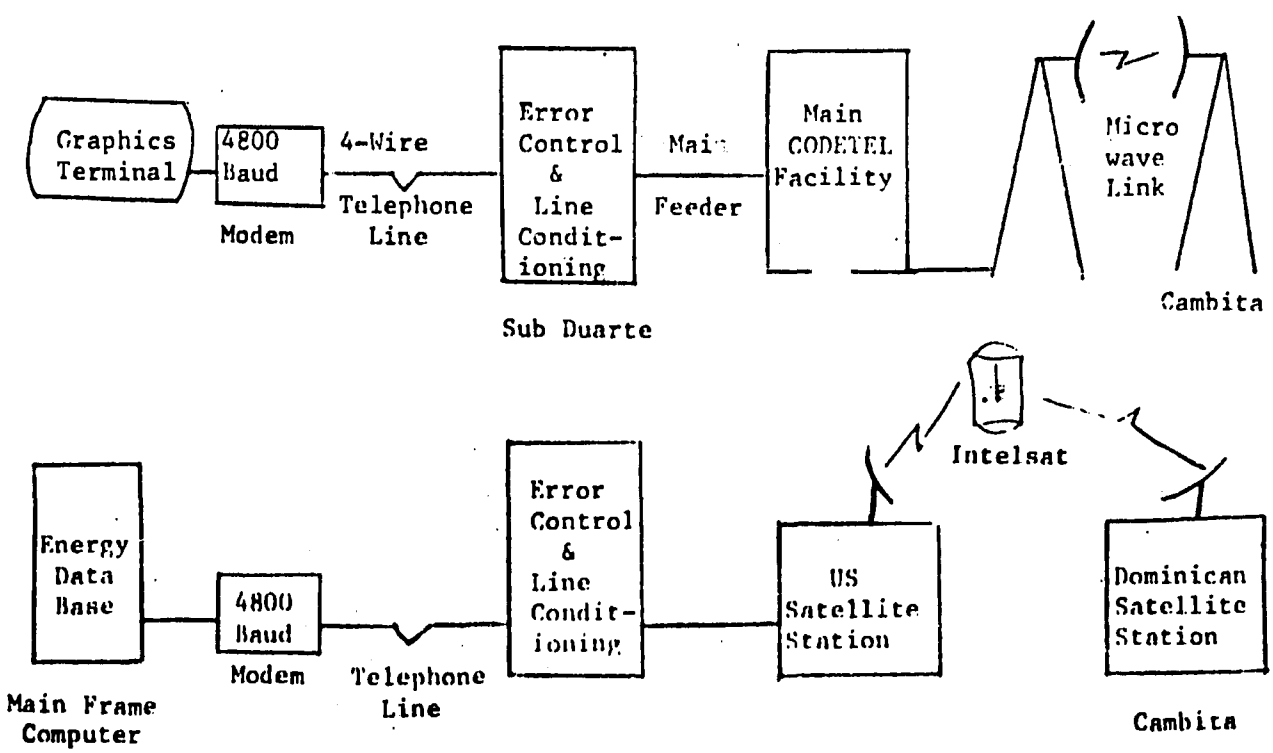

However, to put the telecommunications option in the proper perspective, five major points must be made:

1) A single graphics terminal, one operator position, would not satisfy a significant portion of the apparent data processing applications within the Energy Commission. When personnel discover the extensive and varied needs for such a terminal, demand will quickly rise for additional work stations.

2) A terminal, as such, cannot provide all of the capability necessary for energy planning processing. Data entry, file storage and printing all require additional hardware at the Commission end of the telecommunications link. In addition, the data entry requirements must be considered. In an initial application, it may be expected that about half of the entire data communication activity will represent data entry. To offset this necessity, the project requirement would have to be reduced to simple query of remote data bases for response.

(3) The system is extremely vulnerable to the number of connections required to establish the telecommunications link. The most critical and least reliable component is the internal D.R. telephone system. Microwave links within Santo Domingo, which would eliminate some of the line problems, are not projected for implementation until 1982.

(4) One disadvantage of the telecommunications option is less flexibility for tailoring programs to meet the end user's needs. All control for system development, programming standards and the creation of the data base resides with the owner of the system. The energy information system should be designed and implemented in a way which makes allwances for system expansion as well as extensions by its users who may wish to add modules of their own to the system.

(5) Finally, such an option has the distinct disadvantage of very high total system costs for communication and transmission of data. The cost for such teleprocessing capability approaches $7,000/month in lease equipment costs alone. The following is a cost break down for a telecommunciations option.

Price for Telecommunications Processing for the Energy Info System
Total Annual Cost

4800 Baud Link	
2 Modems (4800 Baud) at $6,950/mo.	$ 83,400
One time installation cost	2,150
Codetel 4 wire redundant line at $80/mo.	960
Maintenance cost at $250/mo.	3,000
Communications cost at $125/hr. at 200 hrs.	25,000
Total cost per year	$114,510

2400 Baud Link	
2 Modems (2400 Baud) at $3,450/mo.	$41,370
One time installation cost	2,150
Codetel 4 wire redundant line at $80/mo.	960
Maintenance cost at $250/mo.	3,000
Communications cost at $125/Hr. at 200 Hrs.	25,000
Total Cost per year	$72,480

* 1200 Baud Link	
2 Modems (1200 Baud) at $1,850/mo.	$22,200
One time installation cost	2,150
Codetel 4 wire redundant line at $80/mo.	960
Maintenance cost at $250/mo.	3,000
Communications cost at $125/Hr. at 200 Hrs.	25,000
Total Cost per year	$53,310

* Although prices are given for 1200 Baud, it appears that such speed would be too slow for application and use by the Energy Commission. The sacrifice of speed for dollar savings may prevent successful operation of the program.

Because of these very high costs, and the fact that a telecommunications link is not essential for either accessing AL-EDIS (which can be set up on a local computer) or for accessing foreign technical data bases (which can be done through procurement of input data tapes), the establishment of a telecommunications link is rejected as an option under this project. The telecommunications option as presented may be satisfactory for implementation in the near future following the project when technical feasibility is improved, costs are lower and the need for on-line inter-active access to generic and technical data bases abroad is greater. This future need of the Energy Commission, however, should not be confused with its immediate needs for energy data processing and planning.

Rejection of the telecommunications option for the near term project effort requires that the Energy Commission establish access to an automated data processing (ADP) system for use of AL-EDIS. One possibility is to share computer capability already existing in-country. Any efficient sharing of in-country facilities must take into consideration the constraints on ADP that is presented by AL-EDIS.

AL-EDIS, at present, is not a portable system, that is, one which can be run on a different computer or operating system, other than the one on which the system was designed and implemented, with little or no modification. An objective for the future development of

AL-EDIS is to make it not only machine-independent but isolated from as much as possible of the operating system. That is not a development to occur within the life of this project.

At present, portability considerations limit compiler languages of an interactive system such as AL-EDIS to choices of Fortran and PL-1, and even further to widely accepted standards forms such as ANSI Fortran. Also, AL-EDIS is being designed to take advantage of the general purpose minicomputers that represent an important new technology and trend in the marketplace of computer products today. The trend toward even more diversified applications for minicomputers however has led to a use of languages for interactive, conversational mode operation. To satisfy minicomputer use and the language requirement, compilers such as PASCAL are desired.

To realize the desired computerized support of AL-EDIS analysis, a date base management system is also required. Such a system provides efficient storage, as well as easy, rapid and useful retrieval in a form conducive to effective analysis and derivative information. Most of the work can then be done locally using the utilities available.

An evaluation of in-country automated data processing capability was made to identify a possible computer for use in the energy information system. GODR administrators generally feel the need for automation in the various areas of business activity and therefore have relied heavily on IBM for such ADP. There are approximately eight IBM 370/115 DOS systems in the Dominican Republic. The lease cost for such a system is approximately $132,000/yr. and because of the age of the technology, most users of these systems are requesting upgrades to the newer IBM offerings. Neither the present of proposed IBM systems lend themselves to the AL-EDIS type of processing required for the energy information system. Some administrators in the GODR are requesting procurement of the WANG 100 VS as the IBM 370 replacement because of the computing power of such a machine and the relatively lower purchase price ($300,000 - $400,000). The WANG system, if procured, will not satisfy AL-EDIS processing because of the lack of Fortran and PASCAL compilers. It is therefore concluded that available or projected in-country ADP capability is not adaptable to the energy information system, largely because the user needs of the Energy Commission have not been considered in the system specifications and hardware requirements of any GODR ADP. This is directly attributed to the fact that the Commission is a newly created government organization that was established by need as an independent coordinating agency and not as part of any existing GODR organization.

A very detailed and necessary software conversion effort to run AL-EDIS on another computer system has minimal probability of success given the technological capabilities in-country and the time

and dollar constraints of the project. It is therefore recommended that a relatively low cost mini-computer package be procured and located in the Energy Commission to provide the capability to utilize the AL-EDIS program effectively, modify or augment that program to meet local needs as necessary, and to establish eventual access to other in-country and foreign data bases and modeling capabilities.

It appears appropriate to keep the design for the mini-computer package as uncomplicated as possible, so that it is capable of being used effectively without significantly modifying hardware, software, practices or policies. An important design criteria is the level of technology in the design. A very detailed and intricate technological design, as suggested in the telecommunications option, leaves little flexibility to make adjustments based on changes in circumstances and perceptions on the part of the project implementors about the capability for energy information processing and analysis. It is with reasonable assurance of project success that the following mini-computer system is proposed for procurement for the development of the Energy Information System.

3. Specifications for the Energy Information System

3.1 General Description

The National Energy Commission will be conducting and processing energy surveys and analyzing the data for development of energy policies and plans. At times, such analysis will require generic and technical data available only from abroad. However it is estimated that for information storage, organization, analysis, and projection purposes, an in-house mini-computer capable of utilizing effectively the AL-EDIS program will be sufficient to meet the Energy Commission needs, at least in the near term.

To satisfy the Commission data processing requirements, the Prime 250 mini-computer, as described herein, to include the minimum characteristics outlined below, is recommended as the only qualified system identified. The manufacturer's address is:

Prime Computer Inc.
40 Walnut Street
Wellesly Hills, Mass. 02181
Telephone: 617-237-6990

General Conditions

1. Prices should be broken down into hardware and non-hardware components to facilitate planning of acquisition.

2. All equipment proposed must be of United States origin as defined in US AID procurement regulations.

3. The purchase agreement must include a guarantee of availability of replacement parts for three years from date of delivery of the system, with provision for delivery of specifications to the user if requested after that time, to enable user contracted manufacture elsewhere.

4. Vendor must be responsible for support of all components of the proposed system regardless of manufacture or development of the components.

5. Vendor must state CIF-Santo Domingo (air freight) prices.

6. Vendor should include a complete set of operating manuals, which fully describe all operating and programming procedures.

7. Vendor should specify all training, availabilty, and associated costs if applicable for managers, analysts, operators, programmers, and maintenance personnel. Vendor should specify any additional training which is recommended.

8. Vendor should include a full description, including costs, for a full service maintenance contract, including all parts and spares. Vendor should include a description of capability to provide such services at the Commission in Santo Domingo. Such capability should include a plan for preventive maintenance.

9. Vendor must deliver and install the system at the Commission facilities in Santo Domingo. Vendor should confirm the adequacy of environmental conditions. Vendor should provide complete environmental and physical installation requirements and specifications with the proposal.

10. Vendor must include all software updates for at least one year, including revisions to manuals.

3.2 Specific Requirements		Cost
1.	Computer system Prime 250 CPU with 512 K MOS memory, Virtual CRT terminal console, 32 MByte Cartridge disk system, PRIMOS operating system software, Cabinet and cabling, Disk and asynchronous peripheral controllers, DMA (direct memory access) channel FORTRAN, BASIC, MIDAS	approximately $59,500

2.	A dot matrix printer similar to Printronics No. 3173 300 lpm/64-96 characters/132 position	$ 8,500
3.	A Magnetic Tape Drive either 9 track 45 ips 800 BPI standard performance including controller, cabinet and cables or 9 track 75 ips 800/1600 BPI dual density high performance including controller, cabinet and cables	$12,000 ($19,000)
4.	A high level language processor PASCAL or PL/1	$ 5,000
5.	A graphics terminal similar to the TECHTRONICS No. 4027 with additional memory options	$ 8,700
6.	An interactive graphics software package similar to TECHTRONICS Plot 10 Interactive Graphics Library	$ 5,000
7.	A data base management system similar to TOTAL, S2K or Prime DBMS	$20,000
8.	A visual display unit, teletypewriter compatible	$ 1,250
	*approximate cost	$119,950

All costs have been determined solely for project budgetary purposes and are subject to change because of demand, marketing strategies and AID procurement negotiations.

4. Other Technical Considerations

4.1 Manpower and Training

The ability to assure adequate manpower capabilities is a critical element in the GODR's ability to expand its energy planning capability and achieve its other development objectives. It is a complex issue which includes:

1) The availability of ADP technically trained people;

2) A good energy management capability at all levels which can effectively apply the ADP manpower available to the timely production of a quality product;

3) The retention of all skilled professionals;

4) An institution of adequate wages combined with standards for job performance.

Urgently needed are:

Personnel who are oriented toward practical applications of available computer technologies;

Training for managers, analysts, programmers.

Timely delivery of equipment and materials;

In the short term (3 to 6 months), practical training programs and technicians type courses followed by on-the-job training of the application of course lessons would be appropriate. This could be followed by work assignments on specific problem applications.

To make any type of energy information system capability a reality, the presence of at least one person experienced in data processing systems is critical. The Commission will need someone who is not only an "analyst/programmer," but someone who understands data processing concepts, machine operations, data storage methods and is familiar with advanced data processing capabilities, software packages, statistical procedures and data base management. Experience with interactive computing systems and/or time sharing systems is also needed. FORTRAN and BASIC are highly desireable, as is some exposure to survey processing and statistical data bases. Search for such a person should begin immediately. A person of this type would probably command a salary of over $1,250 per month and additional training costs could be expected. The salary range must also be considered in relation to the salaries of other Commission personnel and the private sector in order to permit payment of an attractive salary.

A second ADP employee is needed to complement the Commission staff. Although this employee does not need the technical qualifications stated above, data entry and computer operations experience is necessary. An enthusiastic junior person with some sort of data management experience would be best to work with the experienced data processor. A salary of $500-$1,000 a month should provide the obvious data processor career needed for recruitment.

Up to this point, emphasis has been placed upon hardware and software for energy information data processing. No matter what facilities are placed in the Commission, satisfactory results are not going to be realized unless adequate technical data processing knowledge is made available to operate the system and interface with the

energy planners. In the event that such persons cannot be hired directly, serious considerations should be given to bringing in consultants to aid in implementation. Although the cost of such outside help would seem excessive, it may be necessary if the Commission is to have a successful data processing capability.

4.2 Site Preparation

Well in advance of the computer system's actual delivery, physical site preparations for the functioning of the new system should begin. In preparing the physical site, the Commission should work closely with the computer manufacturer so that no equipment peculiarities or environmental requirements are overlooked. Any physical site preparation work should be completed and all facilities tested at least one week before the computer equipment is delivered. When equipment is delivered, the Commission must monitor the installation carefully. Certification and payment is to be made only after the performance of all hardware and software to contractually specified standards verified by acceptance tests.

The following list highlights a recommended preinstallation checklist for estimating site preparation costs.

Preinstallation Checklist and Estimated Costs

1.	Air Conditioning estimated 3.17 tons to provide 15 to 30 C with average heat dissipation of 25,000 BTU's by equipment. Humidity Control for 30 to 80 % relative humidity.	$ 7,000
2.	Electrical Installation	$ 2,000
	a. For AC	
	b. For computer 110 or 220 VAC	
	50 - 60 HZ	
	50 - 100 AMP	
	c. Emergency Power Off	
	d. Lighting	
	e. Outlets	
3.	Partitioning, doors, etc.	$ 5,000
4.	Fire Detection/Estinguisher/Alarms/Locks/Security	$ 1,500
5.	Furniture (fire resistant)	$ 1,000
6.	Structural check of floors, bldg., and equipment hoist	$ 1,100

7.	Telephone lines	$ 200
8.	Storage; racks, etc.	$ 500
9.	Power line filter (isolation transformer and computer battery pack).	$ 1,500
10.	Contingency and Inflation (25%)	$ 5,200
	TOTAL	$25,000

4.3 Maintenance and Spare Parts

The vendor shall have full responsibility for the equipment during the installation and acceptance test. Beginning with the acceptance of the system, on-call maintenance support is required with a response time not to exceed one day after notification. Preventive maintenance schedules should be established and a principal period of maintenance contracted for.

The vendor should provide and maintain an inventory of spare parts to effect repair of hardware failures. The vendor must warrant that spare parts will be available at all times for a period of three years after the acceptance date.

The vendor must provide complete sets of literature covering all ADP equipment and software characteristics and programmer and operator manuals of the proposed system. The documentation should include the operating system and its use of its command language, language processors, and utility software. The vendor must provide updates to the delivered software documentation. This must continue for the duration of system life. The following additional documentation is required:

1) Program documentation. Logic documentation and source program listings for all software programs.

2) Engineering documentation. Hardware schematics, maintenance diagnostics and any other documentation to maintain and operate the equipment.

3) System Performance Measurement Documentation. All documentation concerning the measurement and evaluation of ADP equipment performance should be available at the time of installation.

It is estimated that the total annual maintenance and operating costs of the mini-computer package will be $25,000.

B. Economic Analysis

As stated in a previous section of the Project Paper, the main purpose of this project is to establish a system for providing updated and continuous information on energy to assist the government in developing sound energy policy.

The nature of the proposed project is such that a conventional economic analysis, which would attempt to quantify both costs and benefits, is not appropriate for demonstrating the economic viability of the planned program.

Furthermore, the resultant effects upon the economy can only realistically be assessed in the long run, depending mainly on the information management capabilities of the Commission and the efficiency of public and private decision makers in utilizing information to make sound decisions. The great difficulty in assessing the true impact of the information transfer is that indicators to measure the impact are lacking.

It is estimated that the Commission spends at present approximately $140,000 per year in the collection and analysis of energy-related information. This information is being presented in very rough form and the outreach is limited. Approximately 18 analytical reports have been prepared by the Commission, representing an average cost of $7,800 per analysis.

The new Energy Information System with an initial establishment cost of $500,000 and a recurrent cost of approximately $100,000 a year is estimated to quadruple the information gathering and output capacity of the Commission. The availability of faster and more reliable data will naturally also increase the capacity to carry out more in-depth analysis and represent a saving in time of over 1/3 versus the present system. In addition, it will permit other institutions to prepare feasibility studies on different energy related subjects by giving easier access to basic energy information.

The main question to be asked is to what extent this information system will benefit the country. In addressing the problem of rapidly rising fuel and energy costs, both government and private sectors have started looking into alternative ways to obtain cheaper energy resources. Naturally, the lack of data available on the subject has induced institutions such as the Central Bank, CDE, INDOTEC, CNAPLAN, CEA, and others to start collecting and preparing on their own basic information on available energy resources and potential.

Estimates are as high as $500,000 a year spent on energy data gathering by the government including the amount spent by the Energy Commission. There will undoubtly be a cost-saving of much of this amount each year with the establishment of the Information System since these institutions will concentrate their effort and budget in carrying out programs rather than in data collection and analysis.

The savings for the country will be much greater since the Information System will, through the information outreach program, bring the basic data to all interested persons and avoid double data gathering by private persons.

One issue which will have to be answered in the long run is the question of whether the utilization of the information collected will result in economic savings. Since increased petroleum costs have started hurting government and private entrepreuneurs badly, most institutions have started looking into changing their operational system so as to reduce their costs in energy.

The magnitude of expenditures on energy alone indicates a tremendous potential for economic savings. The Government, for example, plans to spend approximately $150.0 million per year during the next four years on energy related investments such as hydroelectric facilities. With an improved information system, it is very likely that these investments will be better directed. The Government will also invest approximately $500 million during the next 3 years in non-energy projects which could benefit indirectly from the Energy Information System, with resulting benefits to the country's economy. These projects could include housing, schools, hospitals, and other public building construction which could be done in a way as to save energy.

It is undoubtly true that with a better technical information system key questions, as to whether Government should invest in hydroelectric plants versus coal conversion, or whether the cement industry should make heavy investment in changing their plants to charcoal, could be better dealt with. Another growing problem is transportation alternatives for the country. Should an electric train system be established for the transportation of commodities throughout the country versus the use of diesel trucks? Should highways be of concrete cement or paved with petroleum by-products.

The same will be true in the private sector, which probably accounts for over 65% of all energy consumption, where different industrial decision makers, for example, are often inhibited from taking the risk of changing their machinery or investments by lack of reliable information.

A reliable information system would permit the public and private sector to introduce qualitative and quantitative changes in production factors enabling them to increase productivity within the present constraints of resource availability and energy shortage. In the private sector, this would be translated into more profits, which could create more investments and jobs. In the public sector, efficiencies in labor and other costs should permit the reallocation of the saved resources to other areas of priority.

In sum, two kinds of economic benefits are expected from the Project. The first involves savings in energy gathering and processing efforts throughout the country, amounting perhaps to as much as $1.0 million over four or five years. These benefits will be maximized if the Information Outreach component of the Project is fully successful. The second kind of economic benefit results from more efficient investments in energy and use of limited energy resources. Because the overall magnitude of public and private energy investments is so great - perhaps as much as $300 million a year - the economic benefits, although they can not be quantified with accuracy, are bound to be many times the cost of this Project.

C. Social/Target Group Analysis

The Energy Policy Development Project creates a vital piece of intellectual infrastructure for the Dominican Republic, the applicability of which will be widespread but the precise effects of which are unpredictable. Thus, the primary purpose of a social analysis, the careful consideration of potential benefits and burdens of a development project to people, is not feasible.

The energy policy project will have a large number of direct and intermediate beneficiaries in addition to serving the society as a whole by facilitating more efficient decision making in the public and private sectors. No attempt will be made to quantify benefits. However, a number of illustrations can be provided which will suggest the reach and utility of the Energy Information System (EIS) to various groups of people in the society.

1. Public Sector

High level Dominican Government officials face a number of serious and difficult choices in responding to the energy problem. Pricing policy for petroleum products has already demonstrated itself to be an extremely sensitive political issue. A continuation of recent price and demand projections place the Dominican Republic on a collision course with economic catastrophe. Basic structural changes will be

required in the economy and the society to adjust to emergent conditions. But what structural changes and at what cost? Should the oil-fixed plants now in use be shifted to coal fixed? What are the costs of such a policy? What of massive new investments in hydroelectric facilities? To what degree would such investments meet rising energy demand and, very importantly, when? The ability to take decisions on structural changes based on sound information is essential. A great deal hangs on whether those decisions are right.

Advisors to top level government decision makers might be viewed as a separate beneficiary group. Many interest groups in the country will be affected favorably or adversely by policy decisions in the energy area. At the present time, these interest groups exercise pressure through the political process in an environment largely free of objective information and standards of analysis. In such an environment, energy policy aberrations exist which probably reflect the play of existing political power arrangements. (An example might be the price differential between gasoline at $2.39 and diesel priced at $0.85 per gallon. When gasoline costs are 3 times the cost of diesel,one might well question whether purely economic considerations are governing price policy.) The ability of the technical advisor to contend successfully with the political forces at play in energy policy matters depends largely on the soundness and credibility of the information base and the analytical process which support recommendations made to policy makers. the policy analysis component of EIS makes it possible for the technical advisor to enter into the political decision making process with credible recommendations on behalf of the society as a whole. The facility, therefore, raises the level of discourse and permits a detailed and sophisticated analysis of positions put forth by various interested groups. Helping the technical advisor to be both more objective and more credible, helps strengthen his hand to the benefit of the society as a whole.

A large number of middle level managers and technical advisors in the public sector will also be direct beneficiaries of the EIS, particularly in the development of projects and of operating and investment budgets. As the costs of energy relative to other program costs increase, many issues previously peripheral to more basic concerns become more important. The location of major government facilities including offices, warehouses, and the like might be well influenced by better projections of energy costs. Significant savings may be generated by developing port facilities on the north shore of the island rather than continuing to bring the vast majority of imported goods into the country through Santo Domingo for further distribution by truck. The cost savings of decentralization of GODR operations from Santo Domingo to the various regions of the country might prove to be significant. The

composition of vehicle fleets, communication systems, and other investment decisions relating to the operating efficiency of the government might be significantly influenced by better information concerning energy costs. Life of project cost analysis would become a feature of investment decision making which would improve the efficiency of the entire governmental budget process.

2. Private Sector

Just as many public officials in many roles will be benefited by the EIS, private sector decision makers and their advisors will also be able to draw upon the EIS to improve the quality of their ivestment and operational decision making. Industrialists, bankers, and business people will have a way of defining the implications, from an energy cost standpoint, of alternative approaches to business problems which they may face. The identification of potential markets in energy production and use may prove to be a significant contribution not only to the business people whose decisions are directly involved, but also to the economy as a whole. The kind of structural shift in the Dominican economy which will be required in order to confront the energy problem successfully requires not only a wide range of major decisions, but also an indeterminate number of individual decisions by citizens throughout the country. A recognition of the projected costs of petroleum relative to alternative energy sources, or the value of conservation efforts can be persuasively presented and intelligently analyzed by individuals who can have greater confidence in the quality of the information provided to them knowing that the Dominican information system is one of the best in the developing world.

Another set of private sector beneficiaries are the opinion leaders of the Dominican society. Just as the technician seeks to engage more effectively in the political process surrounding energy policy, opinion leaders are assisted in formulating their views by the availability of objective, credible information. A useful public dialogue on energy policy would be greatly enhanced with reliable policy-related information.

The technical information transfer and information outreach components of the EIS will similarly benefit a wide range of users. These subcomponents will be precisely tailored to reach particular information sources and users.

The technical information transfer activity will identify a number of information sources which will be accessed through the project. The information outreach component will identify specifically the various types of users: the specific information needs of these user

groups; the most effective information channels for reaching specific user groups; how to make these groups aware of the existence of information; develop methods to assure the effective communication of available information to users in forms which are most accessible to them; and promote and encourage use of the information.

While the Mission does not wish to anticipate the approach taken by the consultants in developing this program, some observations on the anticipated line of development are in order.

There are many groupings within the Dominican society which can be identified as having essentially common problems in energy conservation and utilization. Thus, for example, one might identify an extended list of groups including rural or urban households, where women are engaged in most energy consuming activities, hotels, hospitals, schools, churches, retailers, trucking firms, bus companies, automobile owners, contractors, architects, large industrial plant operations, metal working shops, bakers, restaurants, and so forth. Large numbers of individual family and business firm decision making units with substantially similar problems fall within each category.

A large number of techniques and technologies may be relevant to each of these groups although the detailed information required by one group may be quite different from that required by other groups. Such areas of potential interest in energy conservation and utilization might include improved lighting, air conditioning procedures and equipment, improved ventilation, maintenance, reduction of heat and humidity infiltration in buildings, reuse of process heat, improved boiler efficiency, improved hot water systems (including solar hot water equipment, faucet and shower head hot water use devices, etc.), improved delivery route scheduling, and so on.

Specific techniques appropriate for members of a particular group along with estimates of potential savings and simple energy budgeting techniques can be defined. The process of communicating this information would be tailored to meet the needs of the members of the groups. For example, architects might be reached through professional seminars and technical documentation. Contractors and truckers might be approached through trade association activities. Home owners might be reached through pamphlets, radio and television broadcasting, advertisements and neighborhood and PTA action activities. Efforts of this nature have been carried out elsewhere. In the United States, statewide energy conservation programs have been implemented apparently with considerable success. A program for the Dominican Republic carefully tailored to local conditions and needs will be developed. The cricial point is that the program will be developed with the energy user and his problems as the basic orientation.

D. Institutional Analysis

The National Energy Policy Commission was established by Presidential Decree No. 584, January 19, 1979. The Commission is chaired by the Secretary of Industry and Commerce and includes as members:

Technical Secretary of the Presidency;
Administrator General of CDE;
President of the Petroleum Refinery;
Executive Director of INDRHI;
Executive Director of INDOTEC;
President of CODIA;
Representative of the Universities;
Representative of the Private Industrial Sector;
Representative of the Private Transportation Sector;
Executive Secretary of the Commission.

The Commission at this highest level meets approximately once every 45 days. Most of the day-to-day activities of the Commission are carried out by the staff of the Executive Secretariat under the direction of the Executive Secretary of the Commission. The Commission receives an annual operating budget of $1.2 million and thus far has hired 31 of a planned total of 35 employees.

As stated in its regulatory statutes, the principal objective of the Commission is the elaboration of a national energy program which will permit a reduction in dependence on foreign energy sources. The specific functions of the Commission are to coordinate the energy-related activities of different public and private sector agencies, analyze the national energy situation and develop national energy plans, identify appropriate areas for public and private investment, and recommend to the President specific energy policies and programs. The Commission's authority includes the preparation of specific legislative or regulatory measures for submission to the executive power. This also includes "suggestions" regarding gasoline prices, electricity rates, and other energy price structures. The Commission is furthermore designated as the coordinating and recipient body for all external financial and technical assistance in the area of energy.

The establishment of the National Energy Commission must be viewed as a very positive step in addressing the energy problem in the Dominican Republic. In the past, government actions to reduce dependence on imported petroleum have tended to be carried out by individual agencies somewhat in isolation. The need for a coordinating institution capable of developing energy policy in light of the overall energy situation has been very evident. By supporting the Commission through this and other projects, it is hoped to strengthen the Commission's ability to fulfill this much needed role.

Although its specific powers vis-a-vis other agencies are still being defined, the Commission does appear to have the potential to influence the energy situation in a significant way, not only by recommending specific policy and investment measures to the President, but also by educating and motivating public and private leaders, and working with other institutions in the development and implementation of energy programs. Recent examples of this kind of influence include motivating and coordinating FORESTA, SEA, ISA, UCMM, INDOTEC, and CDE participation in Phase I of an energy farm project financed by AID. Based on the results of Phase I, the participating agencies are now prepared to move into planning and execution of Phase II for establishment of a pilot facility. The Commission has also played an instrumental role in working with CDE to initiate a feasibility study for a national oil to coal conversion program.

Within its annual budget, the Commission also carries out technical research activities and individual pilot projects and programs, in addition to its overall policy analysis and planning activities. In its workplan for 1980, the Commission is proposing to carry out some thirty different projects in energy conservation and local energy resource development, about a third of which are to be financed from its own budget.

The Secretariat of the Commission, which has full responsibility for the day-to-day activities of the Commission, is headed by an Executive Secretary and divided into Departments of Economic Affairs, Energy Resources, and Energy Conservation.

The Economic Affairs Division is divided into sections for Energy Information and Energy and Economic Analysis. Its functions include establishing and operating an infrastructure for the collection, management and analysis of energy information, the development of national energy balances and projections and research and analysis of the relationship between economic and energy factors.

The Department of Energy Resources is divided into sections for conventional and non-conventional resources. Its functions include examination of domestic and international energy supply trends, research into the development of indigenous conventional and non-conventional energy resources, and specific programs to develop and promote the utilization of local energy resources.

The Energy Conservation Department is divided into sections for education and extension, industry and commerce, housing and buildings and special programs in the transportation and electrical sectors for example. The functions of the Conservation Department include programs to increase public awareness of the energy problem and conservation possibilities, individual conservation programs focused on the

industrial, commercial, and transportation sectors, and programs in collaboration with CDE to improve efficiencies and reduce losses in the electrical generation, transmission and distribution systems.

The majority of the professional staff employed by the Commission have technical backgrounds in engineering, architecture, etc. The following is a list of educational qualifications of the staff hired to date:

Electromechanical Engineers	5
Civil Engineers	2
Biochemical Engineers	2
Chemical Engineers	2
Industrial Engineer	1
Consultant Engineers (part time)	2
Economists	2
Social Scientist	1
Architect	1
Accountants	3
Librarians	2
Receptionist/Secretaries	4
Chauffers	3
Messenger	1

The following diagrams illustrate in more detail the institutional structure of the National Energy Commission:

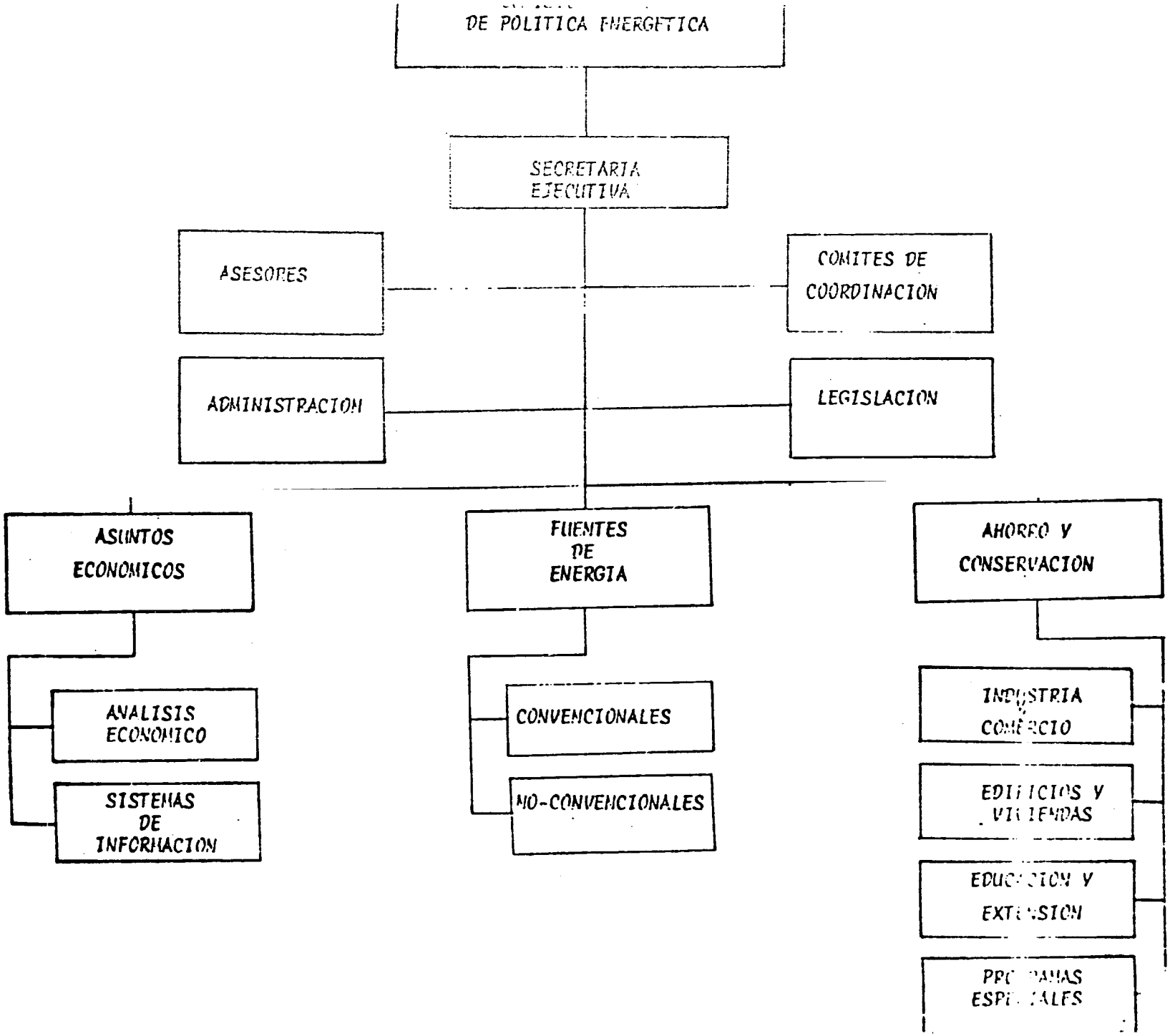
DE POLITICA ENERGETICA
SECRETARIA EJECUTIVA
ASESORES
COMITES DE COORDINACION
ADMINISTRACION
LEGISLACION
ASUNTOS ECONOMICOS
FUENTES DE ENERGIA
AHORRO Y CONSERVACION
ANALISIS ECONOMICO
SISTEMAS DE INFORMACION
CONVENCIONALES
NO-CONVENCIONALES
INDUSTRIA
COMERCIO
EDIFICIOS Y VIVIENDAS
EDUCACION Y EXTENSION
PROGRAMAS ESPECIALES

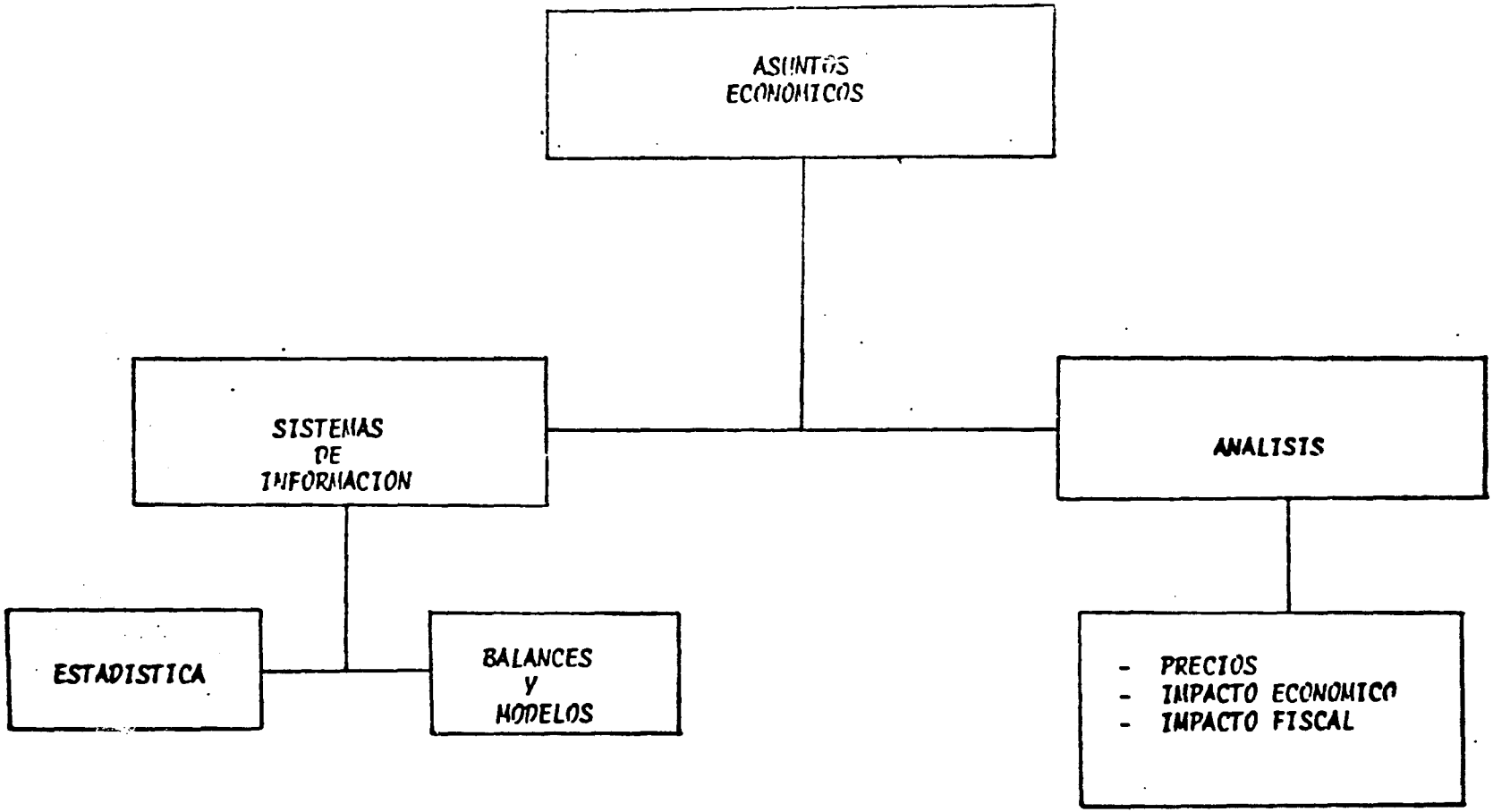
ASUNTOS
ECONOMICOS
SISTEMAS
DE
INFORMACION
ANALISIS
ESTADISTICA
BALANCES
Y
MODELOS
- PRECIOS
- IMPACTO ECONOMICO
- IMPACTO FISCAL

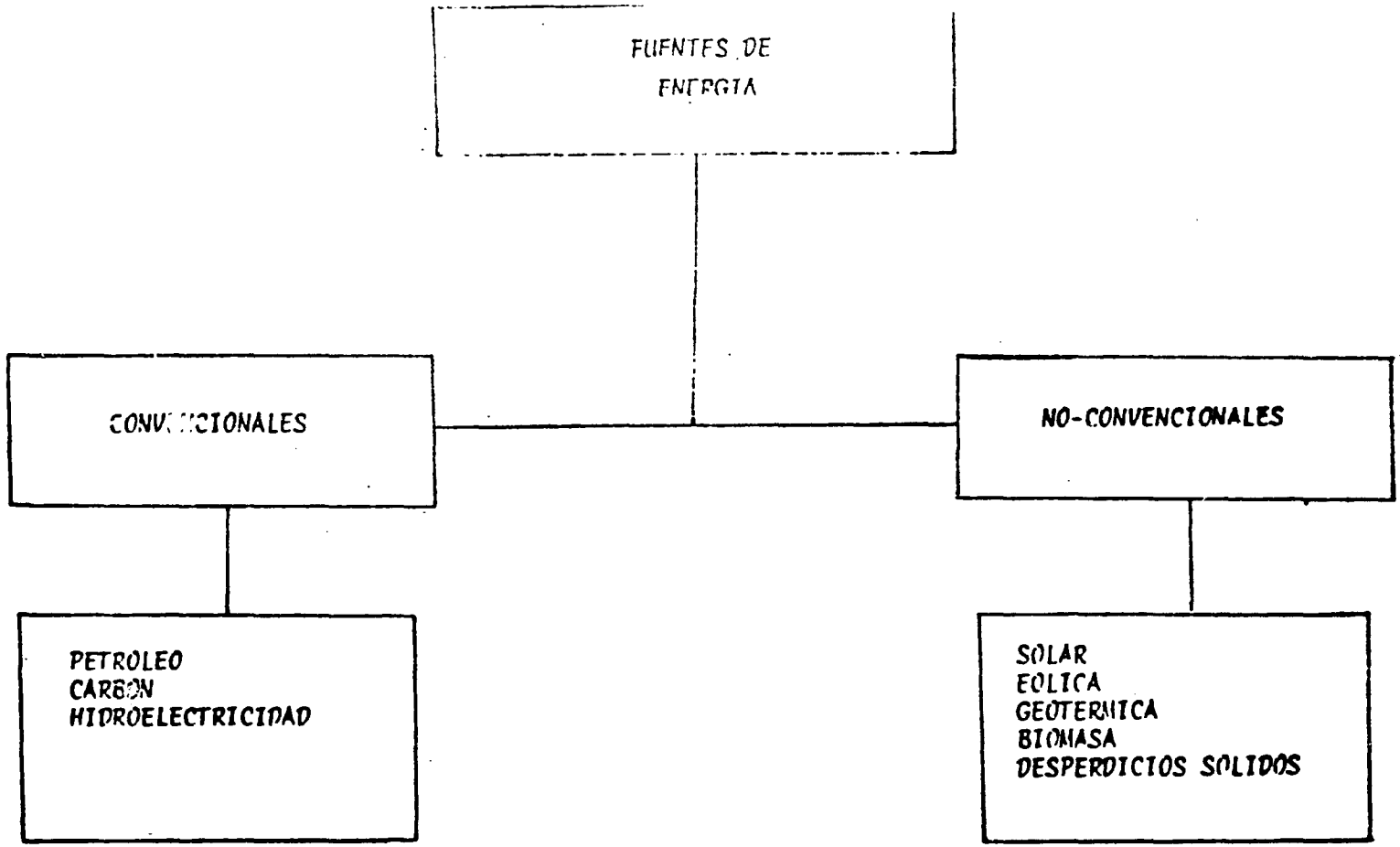
FUENTES DE ENERGIA
CONVENCIONALES
NO-CONVENCIONALES
PETROLEO
CARBON
HIDROELECTRICIDAD
SOLAR
EOLICA
GEOTERMICA
BIOMASA
DESPERDICIOS SOLIDOS

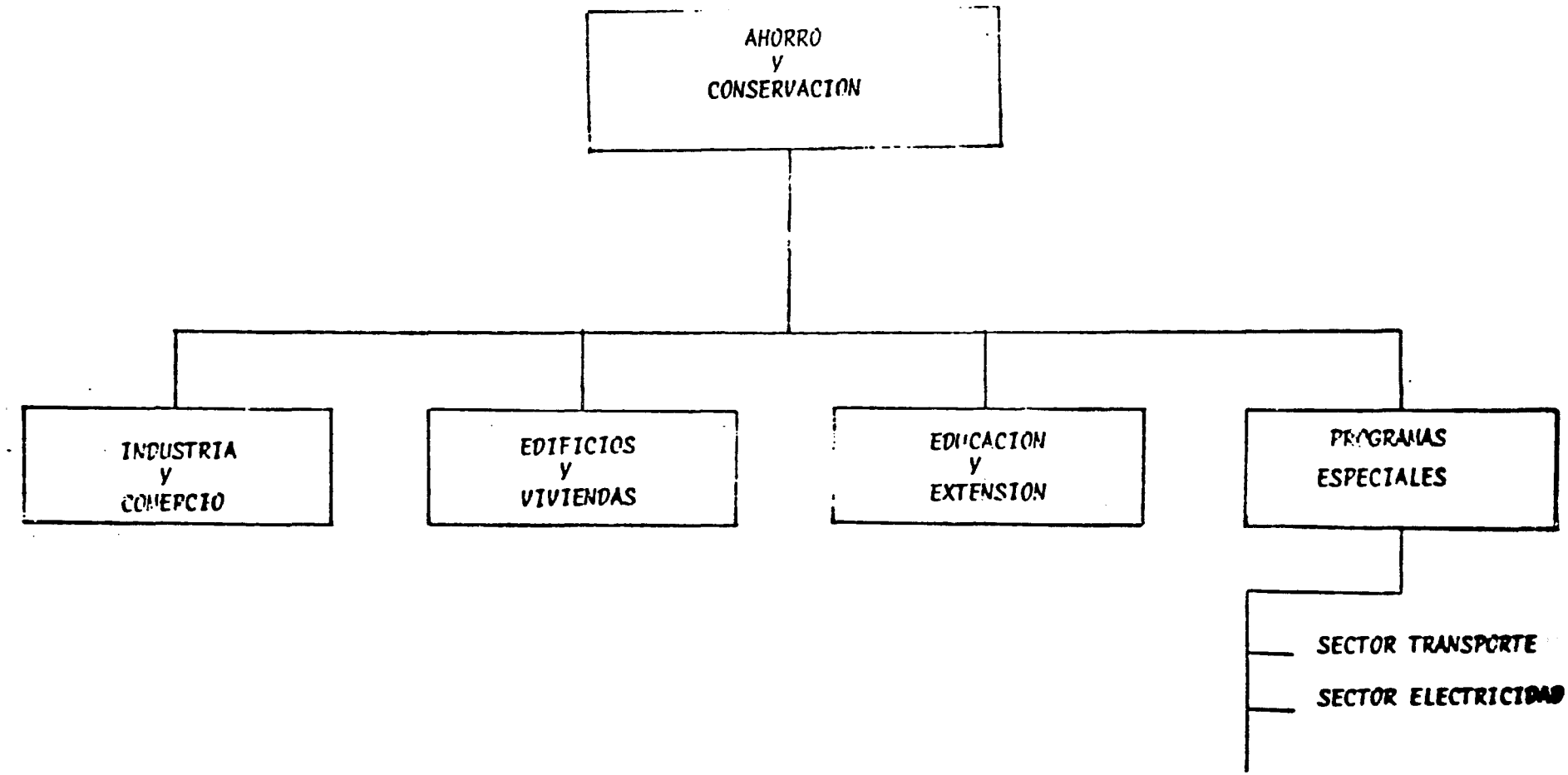
AHORRO
Y
CONSERVACION
INDUSTRIA
Y
COMERCIO
EDIFICIOS
Y
VIVIENDAS
EDUCACION
Y
EXTENSION
PROGRAMAS
ESPECIALES
SECTOR TRANSPORTE
SECTOR ELECTRICIDAD

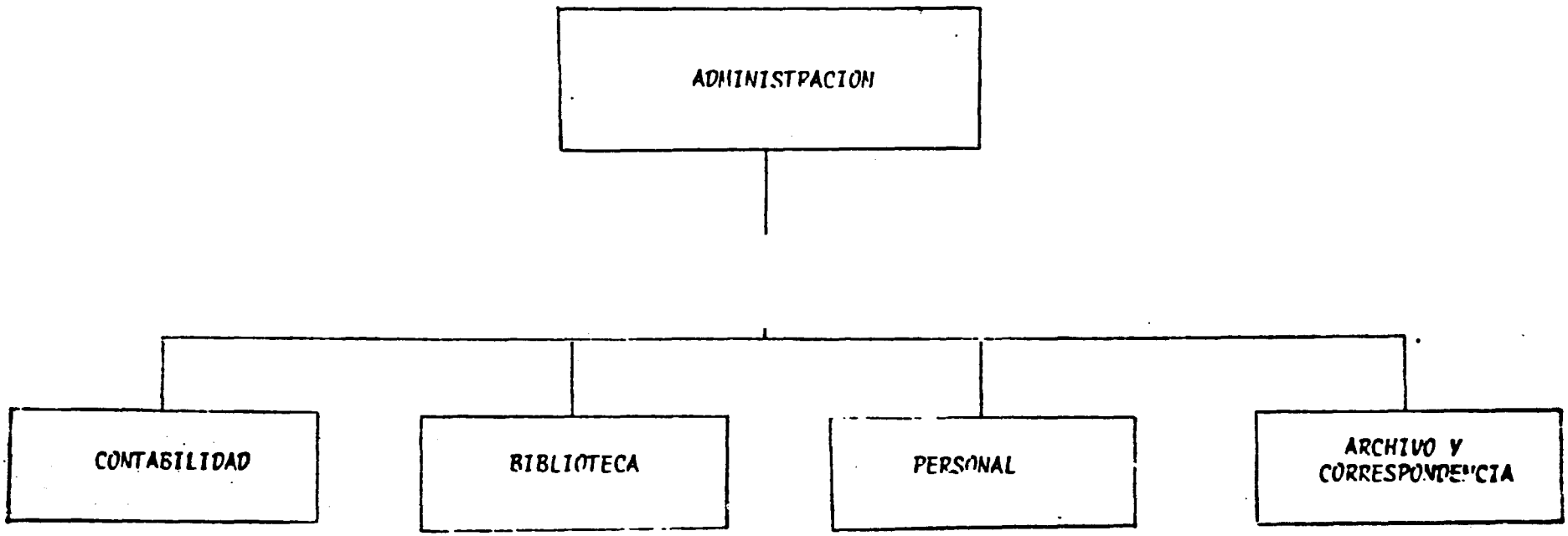
ADMINISTRACION
CONTABILIDAD
BIBLIOTECA
PERSONAL
ARCHIVO Y
CORRESPONDENCIA

V. PROJECT IMPLEMENTATION

A. Financial Plan

The total cost of the Project is $1,024,000 of which $764,000 is to be financed with AID grant funds. The GODR counterpart contribution will be no less than $260,000 which represents 26 per cent of the total Project cost. Project costs are summarized by year, contributor and type of currency in the Financial Plan on the following page. As illustrated in the Plan, disbursements will be made over a two year period.

The GODR contribution will be provided from the budget of the National Energy Policy Commission.

B. Disbursement Procedures and Reporting Requirements

1. Foreign Exchange Costs

Disbursements for technical assistance and commodity procurement will be made by the USAID Controller under direct AID Letter of Commitment procedures.

Disbursements procedures for long and short term training will vary with the nature and length of training involved.

2. Local Currency Costs

Disbursements will be made by the USAID Controller upon receipt of a properly documented disbursement request from the National Energy Policy Commission.

3. Reporting Requirements

The National Energy Commission will submit to USAID quarterly reports throughout the life of the Project describing the status of implementation of the different Project activities as well as the status of expenditures under the Project.

FINANCIAL PLAN
(000)

	FY 1981			FY 1982			PROJECT TOTAL		
	AID		GOJK	AID		GOJK	AID		GOJK
	US$	RO$	RO$	US$	RO$	RO$	US$	RO$	RO$
I. Energy Information System									
1. Policy Analysis									
Data Collection and Processing									
Consultants	90	0	0	30	0	0	120	0	0
Local Staff/Materials	0	0	30	0	0	30	0	0	60
Computer Program									
Computer Hardware and Software	120	0	0	0	0	0	120	0	0
Maintenance	0	0	0	0	0	25	0	0	25
Site Preparation	0	0	25	0	0	0	0	0	25
Staff Development	80	0	30	60	0	30	140	0	60
2. Technical Information Transfer									
Consultants/Services	0	0	0	20	0	0	20	0	0
Data Acquisition Costs	0	0	0	20	0	0	20	0	0
Training	0	0	0	10	0	0	10	0	0
3. Information Outreach									
Consultants	10	5	0	30	5	0	40	10	0
Local Staff/Materials	0	0	5	0	5	20	0	0	25
Subtotal Energy Information System	300	5	95	170	5	100	470	10	195
II. Technical Assistance and Training									
1. Energy Training Needs Study	40	0	5	0	0	0	40	0	5
2. Mini-Course Program	25	55	5	5	15	5	30	70	10
3. Long and Short Term T.A. and Training	34	0	10	60	0	20	94	0	30
Subtotal Technical Assistance and Training	99	55	20	65	15	25	164	70	45
III. Project Evaluation	0	0	0	20	0	10	20	0	10
IV. Contingency	15	0	5	15	0	5	30	0	10
PROJECT TOTAL	414	60	120	270	20	140	684	80	260

C. **Procurement**

Under the Policy Analysis Component of the Energy Information System technical services will be procured for data collection and processing and staff development, and computer hardware will also be procured. The technical services will have to be provided by persons thoroughly familiar with the AL-EDIS program as well as with sources and types of energy data in the Dominican Republic. There appears to be no question that the most appropriate organization to provide the required technicial services is the Institute of Energy Research in Stoneybrook, New York, which has developed the AL-EDIS program, is the only organization capable of providing training in use of AL-EDIS at this time, and includes on its staff serveral persons who participated in the National Energy Assessment in the D.R., thereby gaining a unique experience and expertise in Dominican energy data collection requirements and procedures. A waiver will be requested from the AA/LAC for sole source procurement of all technical services involving data collection and processing and staff development from the Institute of Energy Research. These services total $230,000.

For procurement of computer hardware, two possibilities are being considered: The first is to request SER/DM and SER/CM to procure all computer hardware on behalf of the Energy Commission. The second possibility is to allow the Institute of Energy Research to procure all hardware on behalf of the Commission. The advantages of the second procedure are: 1) that it would result in a "turn key" package procurement for the entire Policy Analysis Component, in which clear responsibility could be assigned for coordinating the timing and provision of different T.A., software and hardware elements to insure that the entire system is established effectively; and 2) a possible reduction in the cost of computer hardware since the Institute of Energy Research is negotiating for procurement of several similar computer hardware packages to be established in other countries. No agent's fees would be charged by the Institute if that procedure were followed.

Consultant services for Technical Information Transfer, Information Outreach and the Energy Training Needs Study (three separate contracts, each $50,000 or less) will be procured either by AID under IQC or by the Energy Commission through informal competitive procurement or 8-A (small business) firms.

Under the Commission-University Mini-Course Program, all procurement of technical teaching services, transportation and other administrative items will be done by the Commission and UCMM.

Finally, the procurement procedures for long and short term training will depend on the kind of training recommended by the Training Needs Study. It may be appropriate to have all training managed under a single contract, with LASBAU, for example, or a similar organization.

The Source and Origin for all procurement will be the United States or the Cooperating Country, except for training outside the Dominican Republic and computerized information tapes. Because it is anticipated that some kinds of third country training and computer tapes may be available only in other countries of Latin America, training outside the Dominican Republic not exceeding $50,000 and computerized information tapes not exceeding $50,000 may have their Source and Origin in countries included in A.I.D. Geographic Code 941. The Director, USAID/DR has the Delegation of Authority to waive for this purpose.

D. Schedule of Major Events

It is anticipated that the Energy Policy Development Project will be implemented according to the following schedule:

Project Authorized and Project Agreement Signed	September, 1980
Computer Site Preparation Begins	September, 1980
Data Collection and Processing Begins	October, 1980
Computer Staff Hired and Training Begins	October, 1980
Procurement of Computer Hardware Begins	November, 1980
Training Needs Study Begins	December, 1980
First Mini-Course Held - Program Begins	December, 1980
Computer Site Preparation Completed	March, 1981
Computer Staff Training Completed	April, 1981
Computer Hardware Delivered and Installed	April-July, 1981
Training Needs Study Completed	May, 1981
Long and Short Term Training Begins	July, 1981
AL-EDIS Program Set Up and Operating	July, 1981

First Annual Updating of Energy Assessment	July-September, 1981
Information Outreach Activities Begin	September, 1981
Annual Project Evaluation Completed	October, 1981
Technical Information Transfer Consultant Services Begin	October, 1981
Private Sector Information Outreach Plan Completed	January, 1982
Technical Information Transfer Data Acquisition Begins	January, 1982
Technical Information Transfer Software	March, 1982
Training Provided	
Final Project Evaluation	September, 1982
Project PACD	September, 1982

E. Project Evaluation

There will be two project evaluations conducted, one after the first year of the Project, and one terminal evaluation at the end of the Project.

The first annual evaluation will address the following issues:

- Establishment of procedures for regular collection and processing of energy data;

- Training and retention of qualified computer staff;

- Effective installation and utilization of computer hardware;

- Effectiveness of Mini-Course Program;

- Usefullness of Training Needs Study;

In addition to the above, the Final Evaluation will also address the following issues:

- Effective utilization of AL-EDIS Program for Policy Analysis purposes;

- Effectiveness of Technical Information Transfer;

- Effectiveness of Information Outreach Program and improvement in energy decisions resulting from improved information;

- Appropriateness and Usefullness of Long and Short Term Training.

Project evaluations will require $20,000 in funds from A.I.D. and $10,000 in counterpart contribution.

F. Conditions and Covenants

The Project Committee recommends that the following conditions be included in the Grant Agreement.

1. **Conditions Precedent to Initial Disbursement:**

   a. The National Energy Policy Commission provides USAID with evidence that it has appointed a full time Project Coordinator for the Project and AID approves the appointment.

   b. The National Energy Policy Commission provides USAID with evidence that it has hired for a minimum of two years two additional staff persons with strong capabilities in computer operating/programming at competitive salaries and incentives.

2. Condition Precedent to Disbursements for the Mini-Course Program:

   The National Energy Policy Commission submits to USAID and USAID approves a detailed plan for the mini-course program, developed jointly with the University of Madre y Maestra, including topics to be covered and budgetary costs.

3. Condition Precedent to Disbursements for the Procurement of Computer Hardware:

   The National Energy Policy Commission provides USAID with evidence that appropriate site preparation measures detailed in the Technical Analysis or the Project Paper, and any other measures which may be required, have been completed.

4. Condition Precedent to Disbursements for Long and Short Term Training:

   The National Energy Policy Commission submits to USAID and USAID approves a National Training Plan for the next 2 and 5 years.

ANNEX A

AID 1020-2 (7-71)

LOGICAL FRAMEWORK MATRIX – PROP WORKSHEET

Summary	Objectively Verifiable Indicators	Important Assumptions
A.1. Goal To help reduce the dependence of the Dominican Republic on imported petroleum and to increase the availability of affordable energy to low income groups in the country. Subgoal: Development of National Energy Plans	A.2. Measurement of Goal Achievement Reduction in imports after five years by National Refinery. Reduced sales of petroleum products. Lower prices of energy sources used by poor (wood, charcoal, electricity). Wider use of renewable energy sources by poor (solar, biomass, mini-hydro, wind).	A.3. (as related to goal) Availability of reliable information will contribute to improved energy policies and programs. Improved management and technical skills will result in more effective development and implementation of energy programs.
B.1. Purpose To establish a system for providing continuous, updated information necessary for developing energy policy and to upgrade the management and technical skills of the National Energy Commission and other agencies involved in the implementation of energy programs.	B.2. End of Project Status Energy information being collected, processed, analyzed and disseminated on a regular basis. National Energy Plans and investment decisions being developed on basis of information. Sound energy policies and programs being implemented.	B.3. (as related to purpose) Different government agencies cooperate in submission of energy data to Energy Commission. Staff turnover on Energy Commission and other agencies does not defeat purpose of training and staff development. Computer program selected is appropriate for Dominican needs.
C.1. Outputs 1. Energy Information System 2. Information Outreach Study 3. Training Needs Study and Plan 4. 6 Technical Mini-Courses 5. 6-8 person years of training	C.2. Output Indicators System established for regular collection, processing, programming and analysis of energy data. Access to at least one computer based technical information network in U.S. established. At least 6 Energy Commission staff persons trained in operation and management of system. Outreach study completed. Training Needs Study and Plan completed. Six Technical Energy Mini-Courses conducted. 6-8 person years of training provided.	C.3. (as related to outputs) Computer program is technically feasible. Services are performed by Consultants adequately and on timely basis. Appropriate long and short term training opportunities are identified and arrangements established.
D.1. Inputs AID: Energy Information System Consultants Computer Hardware Training Technical Assistance and Training Consultants Mini Courses Training Evaluation GODR: Energy Information System Technical Assistance and Training Evaluation Contingency	D.2. Budget/Schedule $190,000 140,000 150,000 40,000 100,000 94,000 20,000 195,000 45,000 10,000 40,000 $1,024,000	D.3. (as related to inputs) $764,000 available in AID funds during FY 80 and FY 81. Energy Commission budget and availability of funds and personnel is not reduced.

LAC/DR/IEE-80-2

ENVIRONMENTAL THRESHOLD DECISION

Location : Dominican Republic

Project Title : Energy Policy Development, 517-0143

Funding : FY 1980, $634,000 Grant

Life of Project: Two years, FY 1980/FY 1981

Mission Recommendation:

Based on the Initial Environmental Examination, the Mission has concluded that the project will not have a significant effect on the human environment and therefore recommends a Negative Determination.

The Development Assistance Executive Committee of the Bureau for Latin America and the Caribbean has reviewed the Initial Environmental Examination for this project and concurs in the Mission's recommendation for a Negative Determination.

AA/LAC Decision:

Pursuant to the authority vested in the Assistant Administrator for Latin America and the Caribbean under Title 22, Part 216.4a, Environmental Procedures, and based upon the above recommendation, I hereby determine that the proposed project is not an action which will have a significant effect on the human environment, and therefore, is not an action for which an Environmental Impact Statement or an Environmental Assessment will be required.

Edward W. Coe
Assistant Administrator for
Latin America and the Caribbean

June 2, 1980
Date

Clearances:
LAC/DR:Environmental Advisor:ROtto OHO
DAEC Chairman:MBrown

INITIAL ENVIRONMENTAL EXAMINATION

PROJECT LOCATION	:	Dominican Republic
PROJECT TITLE	:	Energy Policy Development
PROJECT NUMBER	:	517-0143
FUNDING	:	FY-1980, $[illegible],000 Grant
LIFE OF PROJECT	:	Two Years, FY-1980/FY-1981
IEE PREPARED BY	:	John M. Clary, Mission Environmental Officer

Signature Date

ENVIRONMENTAL ACTION RECOMMENDED: Negative Determination (See Page 2)

CONCURRENCE: Philip R. Schwab, Director USAID/DR

Signature Date

I. Examination of Nature, Scope and Magnitude of Environmental Impacts

The project is designed to establish a system for gathering, processing and disseminating information on energy and to [illegible] the management and technical skills of Dominican agencies involved in energy activities. The project consists primarily of [illegible] assistance and training activities to be provided either in the capital city of Santo Domingo or abroad. A single computer terminal will also be financed under the project.

None of the planned activities are expected to have any impact on the environment.

II. Recommendation for Environmental Action

The project will have no adverse impact on the human or natural environment of the Dominican Republic. It is therefore recommended that the Assistant Administrator for Latin America and the Caribbean approve a Negative Determination for this project.

BEST AVAILABLE COPY

Impact Areas and Sub-Areas	Impact Identification and Evaluation 1/
A. LAND USE	
1. Changing the character of the land through:	
a. Increasing the population	N
b. Extracting natural resources	N
c. Land clearing	N
d. Changing soil character	N
2. Altering natural defenses	N
3. Foreclosing important uses	N
4. Jeopardizing man or his works	N
5. Other factors	
_____	_____
_____	_____
B. WATER QUALITY	
1. Physical state of water	N
2. Chemical and biological states	N

1/ N - No environmental impact.
L - Little environmental impact.
M - Moderate environmental impact.
H - High environmental impact.
U - Unknown environmental impact.

BEST AVAILABLE COPY

3. Ecological balance..... N

4. Other factors

_____ _____

_____ _____

C. ATMOSPHERIC

1. Air additives..... N

2. Air pollution..... N

3. Noise pollution..... N

4. Other factors

_____ _____

_____ _____

D. NATURAL RESOURCES

1. Diversion, altered use of water..... N

2. Irreversible, inefficient commitments..... N

3. Other factors

_____ _____

_____ _____

E. CULTURAL

1. Altering physical symbols..... N

2. Dilution of cultural traditions..... N

3. Other factors

_____ _____

_____ _____

F. SOCIO ECONOMIC

1. Changes in economic/employment patterns..... N

2. Changes in population..... N

3. Changes in cultural patterns..... N

4. Other factors

_____ _____

_____ _____

G. HEALTH

1. Changing a natural environment..... N

2. Eliminating an ecosystem element..... N

3. Other factors

_____ _____

_____ _____

H. GENERAL

1. International impacts..... N

2. Controversial impacts..... N

3. Larger program impacts..... N

4. Other factors

_____ _____

_____ _____

DRAFT

PROJECT AUTHORIZATION

NAME OF COUNTRY	:	**DOMINICAN REPUBLIC**
NAME OF PROJECT	:	**ENERGY POLICY DEVELOPMENT**
PROJECT NUMBER	:	**517-0143**

1. Pursuant to Section 106 of the Foreign Assistance Act of 1961, as amended, I hereby authorize the Energy Policy Development project for the Dominican Republic ("Cooperating Country") involving planned obligations of not to exceed seven hundred and sixty four thousand United States Dollars (US$764,000) in grant funds ("Grant") over a two-year period from date of authorization, subject to the availability of funds in accordance with the AID OYB/allotment process, to help in financing foreign exchange and local currency costs for the Project.

2. The Project consists of the provision of resources to establish an energy information system and to strengthen the management and technical skills of public and private agencies and groups involved in the development and implementation of energy programs.

3. The Project Agreement, which may be negotiated and executed by the officer to whom such authority is delegated in accordance with A.I.D. regulations and Delegations of Authority, shall be subject to the following essential terms and covenants and major conditions, together with such other terms and conditions as A.I.D. may deem appropriate.

a. Source and Origin of Goods and Services

With the exception of training outside the Dominican Republic, computerized information tapes and ocean shipping, goods and

services financed by A.I.D. under the Project shall have their source and origin in the United States and in the Cooperating Country, except as A.I.D. may otherwise agree in writing. Training outside the Dominican Republic not exceeding $50,000 and computerized information tapes not exceeding $50,000 may have their Source and Origin in countries included in A.I.D. Geographic Code 899. Ocean shipping financed by A.I.D. under the Project shall, except as A.I.D. may otherwise agree in writing, be financed only on flag vessels of the United States.

b. Conditions Precedent to Initial Disbursement

Prior to any disbursement, or the issuance of any commitment documents under the Project Agreement, the Cooperating Country shall, except as A.I.D. may otherwise agree in writing, furnish to A.I.D., in form and substance satisfactory to A.I.D.: i) evidence that a full time coordinator for the Grant Project has been appointed with adequate staff and equipment to support the administration of the Grant Project; and ii) evidence that the National Energy Policy Commission has hired for a minimum of two years, at competitive salaries and with incentives, additional staff personnel with strong capabilities in computer operating and programming.

c. Condition Precedent to Disbursement for the Procurement of Computer Hardware

Prior to any disbursement, or the issuance of any commitment documents under the Project Agreement to finance the procurement of computer hardware, the Cooperating Country shall, except as A.I.D. may otherwise agree in writing, furnish to A.I.D. in form and substance

satisfactory to A.I.D., evidence that appropriate site preparation measures identified in documents furnished to the Cooperating Country by A.I.D., and any other measures which may be required, have been completed.

d. Condition Precedent to Disbursement for the Mini-Course Program Under the Technical Assistance and Training Component

Prior to any disbursement, or the issuance of any commitment documents under the Project Agreement to finance the Mini-Course Program under the Technical Assistance and Training Component, the Cooperatin Country shall, except as A.I.D. may otherwise agree in writing, furnish to A.I.D., in form and substance satisfactory to A.I.D., a detailed plan for the Mini-Course Program developed jointly with the University of Madre y Maestra, which includes topics to be covered and budgetary costs.

Condition Precedent to Disbursement for Short and Long Term Training Under the Technical Assistance and Training Component

Except as A.I.D. may otherwise agree in writing, prior to any disbursement, or the issuance of any commitment documents under the

Director, USAID Mission to
the Dominican Republic

Date

BC(1) - COUNTRY CHECKLIST

Listed below are, first, statutory criteria applicable generally to FAA funds, and then criteria applicable to individual fund sources: Development Asistance and Economic Support Fund.

A. GENERAL CRITERIA FOR COUNTRY ELIGIBILITY

1. FAA Sec. 116. Can it be demonstrated that contemplated assistance will directly benefit the needy? If not, has the Department of State determined that this government has engaged in a consistent pattern of gross violations of internationally recognized human rights?	Yes.
2. FAA Sec. 481. Has it been determined that the government of recipient country has failed to take adequate steps to prevent narcotics drugs and other controlled substances (as defined by the Comprehensive Drug Abuse Prevention and Control Act of 1970) produced or processed, in whole or in part, in such country, or transported through such country, from being sold illegally within the jurisdiction of such country to U.S. Government personnel or their dependents, or from entering the United States unlawfully?	Yes.
3. FAA Sec. 620(b). If assistance is to a government, has the Secretary of State determined that it is not controlled by the international Communist movement?	Yes.
4. FAA Sec. 620(c). If assistance is to government, is the government liable as debtor or unconditional guarantor on any debt to a U.S. citizen for goods or services furnished or ordered where (a) such citizen has exhausted available legal remedies and (b) debt is not denied or contested by such government?	No.
5. FAA Sec. 620(e)(1). If assistance is to a government, has it (including government agencies or subdivisions) taken any action which has the effect of nationalizing, expropriating, or otherwise seizing ownership or control of property of U.S. citizens or entities beneficially owned by them without taking steps to discharge its obligations toward such citizens or entities?	No.

A.

6. FAA Sec. 620(a), 620(f); FY 79 App. Act, Sec. 108, 114 and 606. Is recipient country a Communist country? Will assistance be provided to the Socialist Republic of Vietnam, Cambodia, Laos, Cuba, Uganda, Mozambique, or Angola? — No.

7. FAA Sec. 620(i). Is recipient country in any way involved in (a) subversion of, or military aggression against, the United States or any country receiving U.S. assistance, or (b) the planning of such subversion or aggression? — No.

8. FAA Sec. 620 (j). Has the country permitte or failed to take adequate measures to prevent, the damage or destruction, by mob action, of U.S. property? — No.

9. FAA Sec. 620(l). If the country has failed to institute the investment guaranty program for the specific risks of expropriation, inconvertibility or confiscation, has the AID Administrator within the past year considered denying assistance to such government for this reason? — No.

10. FAA Sec. 620(o); Fishermen's Protective Act of 1967, as amended, Sec. 5. If country has seized, or imposed any penalty or sanction against, any U.S. fishing activities in international waters:

a. has any deduction required by the Fishermen's Protective Act been made? — -

b. has complete denial of assistance been considered by AID Administrator? — -

11. FAA Sec. 620; FY 79 App. Act, Sec. 603. (a) Is the government of the recipient country in default for more than 6 months on interest or principal of any AID loan to the country? (b) Is country in default exceeding one year on interest or principal on U.S. loan under program for which App. Act appropriates funds? — No.

12. FAA Sec. 620(s). If contemplated assistance is development loan or from Economic Support Fund, has the Administrator taken into account the percentage of the country's budget which is for military expenditures, the amount of foreign exchange spent on military equipment and the

A.12.

amount spent for the purchase of sophisticated weapons systems? (An affirmative answer may refer to the record of the annual "Taking Into Consideration" memo: "Yes, as reported in annual report on implementation of Sec. 620(s)." This report is prepared at time of approval by the Administrator of the Operational Year Budget and can be the basis for an affirmative answer during the fiscal year unless significant changes in circumstances occur.)

13. FAA Sec. 620(t). Has the country severed diplomatic relations with the United States? If so, have they been resumed and have new bilateral assistance agreements been negotiated and entered into since such resumption? — No.

14. FAA Sec. 620(u). What is the payment status of the country's U.N. obligations? If the country is in arrears, were such arrearages taken into account by the AID Administrator in determining the current AID Operational Year Budget? — No.

15. FAA Sec. 620A, FY 79 App. Act, Sec. 607. Has the country granted sanctuary from prosecution to any individual or group which has committed an act of international terrorism? — No.

16. FAA Sec. 666. Does the country object, on basis of race, religion, national origin or sex, to the presence of any officer or employee of the U.S. there to carry out economic development program under FAA? — No.

17. FAA Sec. 669, 670. Has the country, after August 3, 1977, delivered or received nuclear enrichment or reprocessing equipment, materials, or technology, without specified arrangements or safeguards? Has it detonated a nuclear device after August 3, 1977, although not a "nuclear-weapon State" under the nonproliferation treaty? — No.

B. FUNDING CRITERIA FOR COUNTRY ELIGIBILITY

1. Development Assistance Country Criteria

a. FAA Sec. 102(b)(4). Have criteria been established and taken into account to assess commitment progress of country in effectively involving the poor in development, on such indexes as: (1) increase in agricultural productivity through small-farm labor intensive agriculture, (2) reduced infant mortality, (3) control of population growth, (4) equality of income distribution, (5) reduction of unemployment, and (6) increased literacy? — Yes.

B.1.

b. FAA Sec. 104(d)(1). If appropriate, is this development (including Sahel) activity designed to build motivation for smaller families through modification of economic and social conditions supportive of the desire for large families in programs such as education in and out of school, nutrition, disease control, maternal and child health services, agricultural production, rural development, and assistance to urban poor? –

2. Economic Support Fund Country Criteria

a. FAA Sec. 502B. Has the country engaged in a consistent pattern of gross violations of internationally recognized human rights? Nc

b. FAA Sec. 533(b). Will assistance under the Southern Africa program be provided to Mozambique, Angola, Tanzania, or Zambia? If so, has President determined (and reported to the Congress) that such assistance will further U.S. foreign policy interests? –

c. FAA Sec. 609. If commodities are to be granted so that sale proceeds will accrue to the recipient country, have Special Account (counterpart) arrangements been made? –

d. FY 79 App. Act, Sec. 113. Will assistance be provided for the purpose of aiding directly the efforts of the government of such country to repress the legitimate rights of the population of such country contrary to the Universal Declaration of Human Rights? –

e. FAA Sec. 620B. Will security supporting assistance be furnished to Argentina after September 30, 1978? –

5C(2) - PROJECT CHECKLIST

Listed below are statutory criteria applicable generally to projects with FAA funds and project criteria applicable to individual fund sources: Development Assistance (with a subcategory for criteria applicable only to loans); and Economic Support Fund.

CROSS REFERENCES: IS COUNTRY CHECKLIST UP TO DATE?
HAS STANDARD ITEM CHECKLIST BEEN REVIEWED FOR THIS PRODUCT?

A. GENERAL CRITERIA FOR PROJECT

1. FY 79 App. Act Unnumbered; FAA Sec. 653 (b); Sec. 634A. (a) Describe how Committees on Appropriations of Senate and House have been or will be notified concerning the project; (b) is assistance within (Operational Year Budget) country or international organization allocation reported to Congress (or not more than $1 million over that figure)?	Congressional Notification dated 8/15/80
2. FAA Sec. 611(a)(1). Prior to obligation in excess of $100,000, will there be (a) engineering, financial, and other plans necessary to carry out the assistance and (b) a reasonably firm estimate of the cost to the U.S. of the assistance?	Yes.
3. FAA Sec. 611(a)(2). If further legislative action is required within recipient country, what is basis for reasonable expectation that such action will be completed in time to permit orderly accomplishment of purpose of the assistance?	
4. FAA Sec. 611(b); FY 79 App. Act Sec. 101. If for water or water-related land resource construction, has project met the standards and criteria as per the Principles and Standards for Planning Water and Related Land Resources dated October 25, 1973?	
5. FAA Sec. 611(e). If project is capital assistance (e.g., construction), and all U.S. assistance for it will exceed $1 million, has Mission Director certified and Regional Assistant Administrator taken into consideration the country's capability effectively to maintain and utilize the project?	
6. FAA Sec. 209. Is project susceptible of execution as part of regional or multilateral project? If so why is project not so executed? Information and conclusion whether assistance will encourage regional development programs.	No.

A.

7. FAA Sec. 601(a). Information and conclusions whether project will encourage efforts of the country to: (a) increase the flow of international trade; (b) foster private initiative and competition; (c) encourage development and use of cooperatives, credit unions, and savings and loan associations; (d) discourage monopolistic practices; (e) improve technical efficiency of industry, agriculture and commerce; and (f) strengthen free labor unions.

8. FAA Sec. 601(b). Information and conclusion on how project will encourage U.S. private trade and investment abroad and encourage private U.S. participation in foreign assistance programs (including use of private trade channels and the services of U.S. private enterprise).

9. FAA Sec. 612(b); Sec. 636(h). Describe steps taken to assure that, to the maximum extent possible, the country is contributing local currencies to meet the cost of contractual and other services, and foreign currencies owned by the U.S. are utilized to meet the cost of contractual and other services.

Discussion and Agreement with Energy Commission.

10. FAA Sec. 612(d). Does the U.S. own excess foreign currency of the country and, if so, what arrangements have been made for its release?

11. FAA Sec. 601(e). Will the project utilize competitive selection procedures for the awarding of contracts, except where applicable procurement rules allow otherwise?

12. FY 79 App. Act Sec. 608. If assistance is for the production of any commodity for export, is the commodity likely to be in surplus on world markets at the time the resulting productive capacity becomes operative, and is such assistance likely to cause substantial injury to U.S. producers of the same, similar, or competing commodity?

B. FUNDING CRITERIA FOR PROJECT

1. Development Assistance Project Criteria

a. FAA Sec. 102(b); 111; 113; 281a. Extent to which activity will (a) effectively involve the poor in development, by extending access to economy at local level, increasing labor-intensive production and the use of appropriate technology, spreading investment out from cities to small towns and rural areas, and insuring wide participation of the poor in the benefits of development on a sustained

B.1.a.

basis, using the appropriate U.S. institutions; (b) help develop cooperatives, especially by technical assistance, to assist rural and urban poor to help themselves toward better life, and otherwise encourage democratic private and local governmental institutions; (c) support the self-help efforts of developing countries; (d) promote the participation of women in the national economies of developing countries and the improvement of women's status; and (e) utilize and encourage regional cooperation by developing countries?

Project will assist in the development of policies to promote small scale energy technologies for use in rural poor areas

b. FAA Sec. 103, 103A, 104, 105, 106, 107. Is assistance being made available: (include only applicable paragraph which corresponds to source of funds used. If more than one fund source is used for project, include relevant paragraph for each fund source.)

(1) [103] for agriculture, rural development or nutrition; if so, extent to which activity is specifically designed to increase productivity and income of rural poor; [103A] if for agricultural research, is full account taken of needs of small farmers;

(2) [104] for population planning under sec. 104(b) or health under sec. 104(c); if so, extent to which activity emphasizes low-cost, integrated delivery systems for health, nutrition and family planning for the poorest people, with particular attention to the needs of mothers and young children, using paramedical and auxiliary medical personnel, clinics and health posts, commercial distribution systems and other modes of community research.

(3) [105] for education, public administration, or human resources development; if so, extent to which activity strengthens nonformal education, makes formal education more relevant, especially for rural families and urban poor, or strengthens management capability of institutions enabling the poor to participate in development;

(4) [106] for technical assistance, energy, research, reconstruction, and selected development problems; if so, extent activity is:

(i) technical cooperation and development, especially with U.S. private and voluntary, or regional and international development, organizations;

Yes. To address national energy problems.

(ii) to help alleviate energy problems;

(iii) research into, and evaluation of, economic development processes and techniques;

(iv) reconstruction after natural or manmade disaster;

B.1.b.(4).

(v) for special development problem, and to enable proper utilization of earlier U.S. infrastructure, etc., assistance;

(vi) for programs of urban development, especially small labor-intensive enterprises, marketing systems, and financial or other institutions to help urban poor participate in economic and social development.

c. [107] Is appropriate effort placed on use of appropriate technology?

d. FAA Sec. 110(a). Will the recipient country provide at least 25% of the costs of the program, project, or activity with respect to which the assistance is to be furnished (or has the latter cost-sharing requirement been waived for a "relatively least-developed" country)? — Yes.

e. FAA Sec. 110(b). Will grant capital assistance be disbursed for project over more than 3 years? If so, has justification satisfactory to the Congress been made, and efforts for other financing, or is the recipient country "relatively least developed"? — No.

f. FAA Sec. 281(b). Describe extent to which program recognizes the particular needs, desires, and capacities of the people of the country; utilizes the country's intellectual resources to encourage institutional development; and supports civil education and training in skills required for effective participation in governmental and political processes essential to self-government. — Project supports development of local staff and institutional development.

g. FAA Sec. 122(b). Does the activity give reasonable promise of contributing to the development of economic resources, or to the increase or productive capacities and self-sustaining economic growth? — Yes.

2. Development Assistance Project Criteria (Loans Only)

a. FAA Sec. 122(b). Information and conclusion on capacity of the country to repay the loan, including reasonableness of repayment prospects.

b. FAA Sec. 620(d). If assistance is for any productive enterprise which will compete in the U.S. with U.S. enterprise, is there an agreement by the recipient country to prevent export to the U.S. of more than 20% of the enterprise's annual production during the life of the loan?

B.

3. Project Criteria Solely for Economic Support Fund

a. FAA Sec. 531(a). Will this assistance support promote economic or political stability? To the extent possible, does it reflect the policy directions of section 102? — Yes.

b. FAA Sec. 533. Will assistance under this chapter be used for military, or paramilitary activities? — No.

5C(3) - STANDARD ITEM CHECK

Listed below are statutory items which normally will be covered routinely in those provisions of an assistance agreement dealing with its implementation, or covered in the agreement by imposing limits on certain uses of funds.

These items are arranged under the general headings of (A) Procurement, (B) Construction, and (C) Other Restrictions.

A. Procurement

1. FAA Sec. 602. Are there arrangements to permit U.S. small business to participate equitably in the furnishing of goods and services financed?	Yes.
2. FAA Sec. 604(a). Will all commodity procurement financed be from the U.S. except as otherwise determined by the President or under delegation from him?	Yes.
3. FAA Sec. 604(d). If the cooperating country discriminates against U.S. marine insurance companies, will agreement require that marine insurance be placed in the United States on commodities financed?	-
4. FAA Sec. 604(e). If offshore procurement of agricultural commodity or product is to be financed, is there provision against such procurement when the domestic price of such commodity is less than parity?	-
5. FAA Sec. 608(a). Will U.S. Government excess personal property be utilized wherever practicable in lieu of the procurement of new items?	Yes.
6. FAA Sec. 603. (a) Compliance with requirement in section 901(b) of the Merchant Marine Act of 1936, as amended, that at least 50 per centum of the gross tonnage of commodities (computed separately for dry bulk carriers, dry cargo liners, and tankers) financed shall be transported on privately owned U.S.-flag commercial vessels to the extent that such vessels are available at fair and reasonable rates.	-
7. FAA Sec. 621. If technical assistance is financed, will such assistance be furnished to the fullest extent practicable as goods and professional and other services from private enterprise on a contract basis? If the	Yes.

A.7.

facilities of other Federal agencies will be utilized, are they paritcularly suitable, not competitive with private enterprise, and made available without undue interference with domestic programs?

8. International Air Transport. Fair Competitive Practices Act, 1974. If air transportation of persons or property is financed on grant basis, will provision be made that U.S.-flag carriers will be utilized to the extent such service is available? — Yes.

9. FY 79 App. Act Sec. 105. Does the contract for procurement contain a provision authorizing the termination of such contract for the convenience of the United States? — Yes.

B. Construction

1. FAA Sec. 601(d). If a capital (e.g., construction) project, are engineering and professional services of U.S. firms and their affiliates to be used to the maximum extent consistent with the national interest? — -

2. FAA Sec. 611(c). If contracts for construction are to be financed, will they be let on a competitive basis to maximum extent practicable? — -

3. FAA Sec. 620(k). If for construction of productive enterprise, will aggregate value of assistance to be furnished by the United States not exceed $100 million? — -

C. Other Restrictions

1. FAA Sec. 122 (e). If development loan, is interest rate at least 2% per annum during grace period and at least 3% per annum thereafter? — -

2. FAA Sec. 301(d). If fund is established solely by U.S. contributions and administered by an international organization, does Comptroller General have audit rights? — -

3. FAA Sec. 620(h). Do arrangements preclude promoting or assisting the foriegn aid projects or activities of Communist-bloc countries, contrary to the best interests of the United States? — Yes.

4. FAA Sec. 636(i). Is financing not permitted to be used, without waiver, for purchase, long-term lease, or exchange of motor vehicle manufactured outside the United States, or guaranty of such transaction? — Yes.

C.

5. Will arrangements preclude use of financing:

a. FAA Sec. 104(f). To pay for performance of abortions or to motivate or coerce persons to practice abortions, to pay for performance of involuntary sterilization, or to coerce or provide financial incentive to any person to undergo sterilization? Yes.

b. FAA Sec. 620(g). To compensate owners for expropriated nationalized property? Yes.

c. FAA Sec. 660. To finance police training or other law enforcement assistance, except for narcotics programs? Yes.

d. FAA Sec. 662. For CIA activities? Yes.

e. FY 79 App. Act Sec. 104. To pay pensions, etc., for military personnel?

f. FY 79 App. Act Sec. 106. To pay U.N. assessments? Yes.

g. FY 79 App. Act Sec. 107. To carry out provisions of FAA sections 209(d) and 251(h)? (Transfer of FAA funds to multilateral organizations for lending.) Yes.

h. FY 79 App. Act Sec. 112. To finance the export of nuclear equipment, fuel, or technology or to train foreign nations in nuclear fields? Yes.

i. FY 79 App. Act Sec. 601. To be used for publicity on propaganda purposes within United States not authorized by the Congress? Yes.

REPUBLICA DOMINICANA

SECRETARIA DE ESTADO DE INDUSTRIA Y COMERCIO

COMISION NACIONAL DE POLITICA ENERGETICA

1 1 AGO. 1980

1108

AID C&R
AUG 11 11 24 AM '80

Sr. Philip R. Schwab, Director
Agencia para el Desarrollo Internacional
Calle César Nicolás Penson
Santo Domingo, D. N.

Distinguido Señor Schwab:

Deseamos agradecer por este medio, en nombre del Gobierno Dominicano, la asistencia que la Agencia para el Desarrollo Internacional ha venido prestando al país en la solución de la problemática energética, especialmente a la Comisión Nacional de Política Energética, mediante el financiamiento de varios proyectos, algunos de los cuales ya han sido concluídos y otros están en su etapa final, como es el caso del Balance Nacional de Energía.

En este sentido, queremos aprovechar la oportunidad para solicitarle formalmente asistencia técnica en el establecimiento de un sistema de información que facilite el análisis de proyectos energéticos y ayude a orientar las decisiones de inversión del Gobierno en este sector, y en un campo tan importante como es el de entrenamiento, con el fin de mejorar la capacidad de análisis e investigación de las fuentes no convencionales de energía del personal técnico de la Comisión Nacional de Política Energética y otras instituciones del sector público y privado.

Hacemos uso de la ocasión para saludarle con sentimientos de consideración y estima.

Muy atentamente,

Manuel Fernández Mármol
Secretario de Estado de Industria y Comercio
Presidente de la Comisión Nacional de Política Energética

MFM:bmo

ACTION: CRD
DATE DUE: 8/20
DIR
AD
PRG
CRD
CONT
C&R

ACTION: CRD
DATE DUE: 8/20
DIR
AD
PRG
CRD
CONT
C&R

ASSESSMENT OBJECTIVES AND PURPOSES

The Dominican Republic Comprehensive Energy Assessment has several objectives:

1) to establish the factual and analytical basis for Dominican Republic government officials to prepare national energy policy recommendations.

2) to assist in the training of designated staff from Dominican Republic government agencies in energy planning methods and techniques.

3) to provide a basis on which the USAID mission to the Dominican Republic will be able to select important areas for U.S. assistance in the energy field.

All of these objectives indicate a need for the assessment to be regarded as the starting point of a continuing national energy planning process involving active participation by persons at various levels within Dominican Republic institutions. The workplan described below recognizes this in several ways. It provides not only for a systematic collection and assembly of energy data but a basis for its updating as the need arises through the use of secondary sources and surveys. It offers an analytical framework for officials of the Dominican Republic and the USAID mission to explore a wide variety of alternative energy strategies for the country. Finally it establishes a quantitative basis for evaluating specific programs of action in terms of their impacts on future economic and social development of the Dominican Republic. To accomplish its goals, the assessment has been organized to ensure a high degree of interaction with persons in the Dominican Republic at each stage of the assessment.

BACKGROUND AND ONGOING WORK

Like many developing countries with a long standing heavy reliance on oil imports, the economy of the Dominican Republic has suffered from the rapid escalation in oil prices. Although the impacts of the 1973-74 oil price increases were softened by the increased prices earned for sugar exports during the period, with the drop in the price of sugar during 1977, the national economic burdens of oil imports have become very serious. In 1977, the DR $182.6 million spent for oil imports represented 23 percent of total export earnings. That fraction is likely to be about 30% in 1979 as petroleum prices experience a new set of increases, and rise to almost 40% in 1980.

Seventy percent of the energy used in the Dominican Republic comes from imported fuels, while 28 percent is in the form of firewood, charcoal and sugarcane biomass. The remaining 2 percent is accounted for by hydropower. The imported fuels account for the overwhelming amount of energy used in industry

and transportation and in the generation of electricity. The remaining so called "non-commercial" sources go to sugar refining and cooking in lower income urban and rural households. Hence, even before the recent devastating hurricane which struck the Dominican Republic, energy concerns had become paramount issues in the country with interest focussing on three principal aspects:

- the short-term problems associated with the balan of payments impacts of current oil imports,
- the intermediate and long-term problems associate with a steadily increasing oil dependence of the nation's economy in an era of dwindling world supply,
- difficulty of assuring a reliable energy supply to rural areas of the country (which contain 50% of the population) to allow economic and social development despite the limited availability of non-commercial fuel sources.

Starting in 1974, a number of studies have been initiated by agencies in the Dominican Republic, the Inter-American Bank and others. Each has provided information documenting one or more aspects of these concerns. This body of informatic constitutes a valuable first step in a full fledged energy assessment of alternative courses of action open to the Dominican Republic in addressing these concerns. Reviewing and assembling this information constitutes, in fact, the first step of the assessment process - a task which has already been undertaken by Brookhaven National Laboratory as part of its AID supported project on "Energy and the Food System in the Dominican Republic". That project is also conducting informati gathering and analytic efforts covering the detailed utilization of energy fuels in the agricultural sector of the Dominican Republic economy and in rural households, another important component of a national energy assessment

In the next section we describe the organization of the assessment, including the way in which the results of these ongoing studies will be used and integrated into our work.

PROJECT PLAN

The project will be organized under seven tasks as described below:

TASK I ORGANIZATION OF THE ASSESSMENT AND PRELIMINARY ISSUE IDENTIFICATION

This task will establish agreement between U.S. and Dominicar Republic participants on detailed organization of the study including 1) the appointment of an Assessment Overview Committee, 2) responsibilities of Dominican Republic staff to be assigned to the study, 3) participation by Energy Commission members and secretariat and USAID country mission members.

TASK II OVERVIEW OF ENERGY SITUATION IN THE DOMINICAN REPUBLIC

The overview being carried out by Brookhaven National Laboratory staff will assemble preliminary information on 1) relevant demographic, geographic, economic, and social characteristics; 2) national energy resources and production capabilities; 3) energy consumption patterns and 4) future energy demand projections for commercial and non-commercial fuels.

Drawing on this report, E/DI staff working with designated Dominican Republic staff will produce a series of country supply/demand balances in order to provide the Assessment Overview Committee with a basis for the preliminary identification of a series of major energy issues for the Dominican Republic.

TASK III ENERGY DEMAND ANALYSIS

The analytical methods to be used in this assessment are based on techniques developed by E/DI staff members and used in major cooperative energy studies between the US Department of Energy and Egypt and Peru. Through experience gained in these studies and drawing on research carried out recently at the Institute for Energy Research at Stony Brook and elsewhere, those methods have been extended and refined for the purposes of this assessment.

E/DI's procedure in conducting energy demand analyses for national energy assessments consists of two steps. The first is to reach agreement by the participating parties on the basic assumptions to be used in projecting demand into the future, including the macro-economic and social development context surrounding such projections. We then proceed to combine secondary source information on sectoral energy use with survey results and activity-based projection models to yield quantitative projections for each major energy end-use sector. These then constitute "reference projections" of energy demand to be used in the analysis of technical and policy options.

The demand sectors to be analysed by E/DI staff and their Dominican Republic counterparts are:

> Urban Households - energy profiles of households in several income groups will be characterized. Expenditures include both those involving direct in-house consumption (cooking, public services) and energy embodied in food consumed, clothing and housing construction. For higher income groups data can be derived primarily from secondary sources. Surveys are used for low and medium income households. Projection methods can be based on population changes, rural/urban migration patterns, household sizes, income elasticities of demand and projected income change.

Industry - activities are broken down by aggregate standard industrial classification groups considering energy and labor intensiveness, size and location (urban/rural). For the highest energy consuming industries, plant surveys will be used to identify fuel and electricity use. The recent InterAmerican Development Bank - sponsored work carried out by T.V. Long will be used as a starting point in this analysis. For the less energy intensive industries secondary sources will be used. Projections are based on 1) change in level of activity (outputs) 2) changes in factor inputs, 3) planned introduction of new processes and industrial activities.

Transportation - activities are classified according to whether they involve transport of passengers or goods. For passengers, transport is disaggregated by mode, household vehicle ownership, and size (if privately owned). For transport of goods disaggregation is by mode and 1) intracity, 2) intercity, 3) mine-to-port, 4) farm-to-market. The major information sources are transport and import statistics, urban questionnaires and interviews with persons involved in mass transit, sale of vehicles and fuels etc. Projections are based on trends involving increased urbanization, mode shifts, vehicle ownership, goods movements, vehicle size and efficiency (including load factors).

Commercial Sector - this sector includes retail establishments, offices, government buildings, schools, hospitals, etc. The basis for demand analysis is the profile of typical energy use per square meter in each type of unit, based on surveys. Projections are based on annual expansion of floorspace, changing level of services and changes in building construction methods.

Public Services - includes emergency services, lighting, government buildings and defense.

Agriculture - energy use in agriculture will be classified by crop, farm size, power and irrigation inputs and region. Special attention is paid to "criticality" of energy inputs, storage on-site or off-site; processing by scale of operation, type of process involved, location and power source. The data base is based on previous surveys updated by selective sampling. In addition, trained observers conduct in depth interviews with farmers to determine energy budgets.

Rural Households - similar to urban households-energy profiles are prepared for several income groups. Data is based primarily on direct survey work. Projections are based on population, household income and targeted improvements in the standards of living of lower income groups.

The agricultural and rural households data collection and analysis is being undertaken by Practical Concepts Inc., under contract to Brookhaven National Laboratory.

TASK IV RESOURCE EVALUATION

For the purposes of a comprehensive energy assessment the evaluation of energy resources has three purposes:

1) to establish the base of renewable and non-renewable energy resources capable of being converted to energy fuels (or directly usable energy end-use forms -- heat and/or motor drive), utilizing existing technologies or those under development.

2) to generate estimates of future production levels (or levels of end-use utilization where direct use is involved) and the cost involved in establishing these production levels.

3) to identify the indirect impacts (enviromental, interference with existing production, need for additional imports, etc.), of such future energy resource production.

This task aims at establishing these estimates in a uniform manner so that alternative resource uses may be intercompared. This is accomplished through the use of a number of technical specialists with expertise in each of the appropriate resource areas who have worked closely with E/DI on past country energy assessments and who will use uniform approaches. These experts will be assigned for short periods in the Dominican Republic to review existing resource material and to perform independent evaluations. The areas to be covered are:

Renewables - Solar, Biomass, Wind and Hydro. The resource base will include compilations of solar insolation levels, potential wind sites and land for biomass production.

In the case of wind, the analysis will use computerized upper atmosphere wind data combined with data from selected ground stations and ground topography to calculate a complete set of surface wind isopleths. Satellite data on solar heat budget and cloud cover combined with ground observations of cloud cover will be used to generate the national solar insolation map. All of the basic information (other than ground station data) are available to an E/DI subcontractor on tape with associated computer analytical programs. The evaluation of biomass will be based primarily on locally available data on agricultural production and forest area, supplemented by international sources

such as the FAO. Hydro potential covering the number, location, estimates of the generatable power will be based on a new appraisal of the recent studies in the Dominican Republic of this potential.

The second and third components of the resource evaluation for renewable resources critically involve consideration of the intermediate conversion technologies employed, the site location, the end-use function, etc. As a result, portions of these evaluations will only be able to be completed later in the assessment when it narrows down to the consideration of a few selected options.

Non-renewables - coal and oil
It will not be possible for the experts to do much more than review the findings of previous groups, interview those involved and provide appraisals of potential reserves, production costs and major impacts. Because of the importance of oil to the Dominican Republic, the formation in the south-western part of the country merits detailed attention. The peat and lignite deposits which have already been identified in the Bayo Yuma area need a better appraisal of the quantities likely to be available and the costs at which they can be mined and transported to existing or planned electric generating stations.

TASK V ANALYSIS OF ENERGY CONVERSION ELEMENTS

The third information gathering activity associated with a national energy assessment is the appraisal of the existing and planned facilities for linking energy resources to end use demand. These include 1) central station and decentralized electric power generation installations and distribution systems, 2) refineries and storage facilities, 3) biomass-alcohol conversion facilities and 4) facilities for the direct use of biogas in generating electricity. Shifts toward more efficient energy end-use and fuel-switching through changes in industrial boilers, vehicle size and power trains, household appliances etc. can also effect these linkages.

Sources of information are government owned companies, various government agencies and the more energy-intensive industrial users. It is assumed that access to all of these sources will be facilitated by the Assessment Overview Committee. While the survey of industrial and urban households will encompass questions on fuel and device switching, this in no way substitutes for a full field investigation of these practices -- an exercise going beyond the scope of this assessment.

TASK VI PREPARATION OF REFERENCE YEAR ENERGY SUPPLY/DEMAND BALANCES

Reference energy supply/demand balances for current and future years play several roles in a national energy assessment.

they offer a convenient method for presenting the information on energy demand, resource evaluation and energy conversion steps in the national energy system

to the policy-makers on the Assessment Overview Committee and elsewhere in the Dominican Republic government in an integrated manner.

- they provide a quantitative basis for first exploring a wide range of strategies for responding to the energy situation portrayed by the Reference Projection and then evaluating a more limited set of specific options.

- they can be used to show the effect of specific actions already being considered on the short and long term concerns of the Dominican Republic.

The framework E/DI will use to prepare the reference year balances is a modification of the Brookhaven Reference Energy System prepared for use in developing country assessments. Balances are derived in this representation by 1) current basic sectoral energy demands and projections for the reference years and 2) presumed improvements in efficiencies of energy using devices and processes and/or penetration of new end-use equipment. Supplies of fuels to meet these demands are matched on the basis of 1) planned rates of build-up in the capacities of the electric power stations, refineries, etc., 2) maximum production goals of appropriate energy resources, and 3) inherent lead times required to incorporate major changes in a national energy system. Oil imports are used as the supply of last resort to balance the system.

TASK VII STRATEGY ANALYSIS

The intent of this task is to explore in close contact with the Assessment Overview Committee a set of national energy strategies that are responsive to the issues identified in Task I in the light of the findings of the reference supply demand balances and other analyses developed in earlier tasks. Strategies that might be considered are improved management of demand (mandatory conservation, marginal cost pricing, adjustments in development objectives, etc.); widespread reliance on renewables (biomass-alcohol, solar drying, wind generated electricity); shift to widespread use of coal. For each strategy, the technical feasibility will be assessed using the reference year balances as points of departure, its current and projected cost will be estimated, and finally its impacts will be analysed, in terms of reduction in oil imports, direct and indirect capital costs, balance of payment effects, etc.

TASK VIII POLICY ANALYSIS

The intent of a national energy assessment is to act as a preliminary step to the development of a Master Energy Plan. Whereas that plan contains specific recommendations for courses of actions, the assessment only proceeds to the point of 1) identifying opportune programmatic areas suitable for government initiatives, 2) addressing the institutional issues needed to exploit these areas, and 3) suggesting a series of assessment follow-up activities necessary to construct a Master Plan. This task is aimed at achieving these objectives. For

each of the strategies identified in Task VII as being significant to the Dominican Republic's future it will define:

a set of development demonstrations or full-blown activities in sufficient detail to form a basis for their further technical evaluation.

the institutional mechanisms and policy measures needed to implement the above.