6640325-2
PD-AAF-489-B1

AGENCY FOR INTERNATIONAL DEVELOPMENT

PROJECT PAPER FACESHEET

1. TRANSACTION CODE: A (A ADD, C CHANGE, D DELETE)

PP

2. DOCUMENT CODE: 3

3. COUNTRY/ENTITY: TUNISIA

4. DOCUMENT REVISION NUMBER:

5. PROJECT NUMBER (7 digits): 664-0325

6. BUREAU/OFFICE: A. SYMBOL: NE; B. CODE:

7. PROJECT TITLE (Maximum 40 characters): Renewable Energy

8. ESTIMATED FY OF PROJECT COMPLETION: FY 81

9. ESTIMATED DATE OF OBLIGATION: A. INITIAL FY 79; B. QUARTER 4 (Enter 1, 2, 3 or 4); C. FINAL FY 80

10. ESTIMATED COSTS ($000 OR EQUIVALENT $1 –)

A. FUNDING SOURCE	FIRST FY B. FX	FIRST FY C. L/C	FIRST FY D. TOTAL	LIFE OF PROJECT E. FX	LIFE OF PROJECT F. L/C	LIFE OF PROJECT G. TOTAL
AID APPROPRIATED TOTAL	400		400	1000		1000
(GRANT)	( )	( )	( )	( )	( )	( )
(LOAN)	( )	( )	( )	( )	( )	( )
OTHER U.S. 1. Peace Corps						
OTHER U.S. 2.						
HOST COUNTRY		175.9			189.275	189.275
OTHER DONOR(S)						
TOTALS						

11. PROPOSED BUDGET APPROPRIATED FUNDS ($000)

A. APPROPRIATION	B. PRIMARY PURPOSE CODE	C. PRIMARY TECH. CODE GRANT	D. PRIMARY TECH. CODE LOAN	E. 1ST FY 79 GRANT	G. 1ST FY 79 LOAN	H. 2ND FY 80 GRANT	J. 2ND FY 80 LOAN	L. 3RD FY GRANT	M. 3RD FY LOAN
(1)				400		600			
(2)									
(3)									
(4)									
TOTALS				400		600			

A. APPROPRIATION	N. 4TH FY GRANT	O. 4TH FY LOAN	P. 5TH FY GRANT	Q. 5TH FY LOAN	T. LIFE OF PROJECT GRANT	U. LIFE OF PROJECT LOAN
(1)					1000	
(2)						
(3)						
(4)						
TOTALS						

12. IN-DEPTH EVALUATION SCHEDULED: MM 09 YY 81

13. DATA CHANGE INDICATOR. WERE CHANGES MADE IN THE PID FACESHEET DATA, BLOCKS 12, 13, 14, OR 15 OR IN PRP FACESHEET DATA, BLOCK 12? IF YES, ATTACH CHANGED PID FACESHEET.

1 (1 = NO, 2 = YES)

14. ORIGINATING OFFICE CLEARANCE

SIGNATURE: Robert W. Beekman

TITLE: Robert W. Beekman
Acting Mission Director

DATE SIGNED: MM 07 DD 26 YY 79

15. DATE DOCUMENT RECEIVED IN AID/W, OR FOR AID/W DOCUMENTS, DATE OF DISTRIBUTION: MM DD YY

AID 1330-4 (3-76)

Tunisia
Renewable Energy
Project Paper
Table of Contents

Project Paper Facesheet

Abbreviations

I. Summary and Recommendations

II. Project Background and Description

III. Project Analysis

A. AID Strategy and Reation to Other Programs

B. Technical Analysis Summary

C. Economic Analysis Summary

D. Social Soundness Summary

E. Administrative Summary

F. Environmental Concerns

IV. Implementation Arrangements

A. Implementation Plan

B. Financial Plan

C. Evaluation Plan

V. Annexes

1. Logical Framework

2. Statutory Checklist

3. a. Request for Assistance

b. PID Approval Message

c. 611 (e) determination

d. Project Authorization to Request for Allotment of Funds

4. Environmental Threshold Decision

5. Detailed Project Budget

6. Technical Annex

   a. District Energy Applications Project

   b. Renewable Energy Training Project

7. Social Analysis

8. Cost and Supply of Electricity to Rural Are

9. Hassi El Frid Well Data

10. Hassi El Frid Statistical Data

11. Tunisia Energy Strategy

12. References

ABBREVIATIONS

AID/W	Agency for International Development, Washington, D.C.
CRGR	Centre de Rechereche du Génie Rural, Ministry of Agriculture
ENIT	Ecole Nationale d/Ingénieurs de Tunis
ETAP	Entreprise Tunisienne d'Activités Pétrolières
GOT	Government of Tunisia
MIME	Ministry of Industry, Mines and Energy
PPDI	Photovoltaic Powered Drip Irrigation
STEG	Société Tunisienne de l'Electricité et du Gaz
USAID	U.S. AID Mission, Tunisia
KW	Kilowatt (1000 watts)
KWh	Kilowatt hour
Amp-hr	Ampere hour of storage
PV	Photovoltaic

Rate of Exchange:

US $1.00 = .400 TD (Tunisian Dinars)

TD 1.000 = US $2.50

Tunisia - Renewable Energy

I. Summary and Demonstrations

A. Purpose

The project will assist the Government of Tunisia (GOT) to reduce dependence on fossil fuels and increase income opportunities in rural areas. This assistance will be concentrated in the following areas:

- Developing GOT institutional capability to plan and implement renewable energy projects; and

- Introducing and testing renewable energy technologies in a rural area

B. Costs

The project costs are:

AID Grant	1,000,000
Peace Corps	93,000
GOT Financing*	207,500
Total	$ 1,300,500

*(In US $ equivalent at US $ 1 = TD 0.400)

C. Description

The project has two complementary activities: the demonstration of renewable energy technologies in a rural agricultural setting and various types of training to develop GOT capability to determine where, when and how renewable energy can be applied to the future.

D. Beneficiairies

The beneficiairies of the project fall into two groups: the village of Hasse El Frid who will use the energy supplied by the project and technicians and decision-makers in the GOT who will use the project activities to educate themselves about renewable energy technologies.

E. Analyses

The analyses in the project paper conclude that, given

its objectives, the project is technically, financially and socially feasible and that planning is sufficiently developed for implementation to begin.

F. Implementation

The GOT, operating through the Ministry of Industry, Mines and Energy (MIME) will be the implementor. MIME has delegated responsibility for project management to the Société Tunisienne de l'Electricité et du Gaz (STEG), an agency within MIME. Other GOT agencies and organizations, such as the Ministries of Agriculture; of Higher Education and Scientific Research; and of Public Health and the Governorate of Kasserine will participate where appropriate. The Peace Corps will provide technical assistance in managing the project and training Tunisian counterparts.

G. Statutory Requirements

These have been met. See Annex 2 and 3.

H. Recommendations

It is recommended that the project, as explained in the project paper, be approved. As this is an experimental demonstration project, employing technology which is costly today, it is recommended that AID assistance be authorized under grant funding to the GOT.

NOTE: The project resulted from discussions between the GOT and USAID. Project development was coordinated by the Office of Energy, Development Support Bureau, AID/W, and NE/TECH. Development Sciences, Inc. (DSI) was involved closely in the development of technical aspects of the project. Much of the substance of the project paper, including annexes, includes or reflects material developed by DSI. Specific attribution is not made in the body of the text.

II. PROJECT BACKGROUND AND DESCRIPTION

A. Background

Relations between Tunisia and the United States are passing into a new phase that has been characterized as a "mature" relationship. During the recent years of economic success that have elevated Tunisia into the category of middle-income nations, the percent of the population falling below the absolute poverty line has decreased from 30 percent to 16 percent. The per capita income now exceeds $800.[1] Under these conditions, AID programs oriented toward human needs require a redefinition. Such a redefinition, of course, does not overlook the continued existence of poverty in the declining fraction of the population, but it takes account of the fact that the path of development is being well travelled, and begins to turn attention to alleviate threats that could reverse the successful course.

Among the characteristics of a "mature" relationship is that it is predicated on self-sufficiency, mutual benefits, and an orientation toward future developments of importance to both nations. In terms of self-sufficiency, Tunisia clearly entered into the international status of a desired trading partner with improving credit and balance of trade features.[2] The maturity of the economic relationship of Tunisia and the United States is reflected in increasing interest in private sector investments by American firms. Energy cooperation can be important in maintaining mutually beneficial relations between the two countries,

---

1. For an overview of basis statistics especially relevant to Agricultural Economic Development see: "Agribusiness Council, Inc.," September 1978. This work is based on analysis by Herbert Steiner, U.S. Department of Agriculture.

2. For analysis of the Tunisian economy, limited official access is granted for: "Tunisia Economic Position and Prospects of Tunisia," Review of the Fifth Development Plan, 1977-1981. World Bank Report No. 1539-TUN, May 2, 1977.

especially in anticipating problems that might disturb Tunisia's development strategy.

The improvement in world commodity prices in 1973-74, especially in petroleum exports, greatly assisted Tunisia to improve her self-sufficiency by paying for refined petroleum imports and literally fueling her economic growth. However, the results of recent energy planning efforts indicate that by 1985, current known reserves will not meet domestic needs and Tunisia will join the group of nations dependent on imported fossil fuels.[1] The diesel and electric pumps being financed today, will, before their amortization period is finished, have to run on imported fuels that are not offset by petroleum exports.

Recognizing that dependence on fossil fuels will hamper severely economic growth in coming years, the GOT is looking seriously at alternative energy sources. The Ministry of Energy has set a goal of meeting ten percent of national needs in 2020 by renewable energy sources. This goal is cirrently being examined in an energy modelling effort under contract to Gordian Associates. Current projections indicate that by 2020 the equivalent of present consumption of fossil fuels will have to be provided by renewable sources.

Tunisian decisionmakers will have to determine when and where renewable energy sources can be used to support development programs. The proposed AID assistance is timely, for if significant amounts of substitute energy

---

1. Ministry of Industry, Mines and Energy, Republic of Tunisia "Apercu Sur La Strategie De L'Energie De La Tunisie."

forms are to be in place by 1990, orders will have to be placed in the mid-1980s. If those decisions are to be informed by familiarity with renewable energies, projects must begin now to pass through the design, construction, operation, and evaluation phases.

Information concerning application of alternative energy sources and technologies is critical. Because of their high cost relative to traditional sources, it is likely that a diminished level of supply (less electricity) will be provided until the economics of solar and wind sources become more favorable. Currently there is very little information on how to design solar and wind energy supply systems for rural villages. There are no proven design criteria used to size the solar panels, windmills, or battery storage systems. Thus, the wide variety of applications of solar and wind technologies suggested for a village in this project will develop design data and help establish how much and for what period of time electricity and energy is needed in rural agricultural settings. The development of this type of data is very important to set the direction for the future of solar and wind uses.

The AID assistance covers a limited area. To be most effective, it should be part of an overall energy assistance program, whether funded from bilateral or multilateral sources. This project is a first step which, if coordinated with proposals and plans of other donors, could evolve into a broader effort by donor organizations to assist Tunisia meet its future energy needs.

B. Project Description: Goal and Purpose

The goal of the project is to demontrate the economic, social and technical value of alternative energy resources and technologies in assisting development and in improving the quality of life in Tunisia. The scope of the project is limited to selected areas of the economy and should be viewed as a first step in implementation of alternative energy sources for Tunisia's social and economic development programs. This project is designed to demonstrate the ability of alternative energy resources of sun and wind and alternative energy technologies to meet the energy needs of a village and its surrounding agricultural activities.

The specific purpose of the project is to provide information to Tunisian decisionmakers that will assist them in relating economic and social development to energy availability. There is currently uncertainty whether sufficient energy will be available in the late 1980s to fulfill economic development plans. Decline in supply of domestic oil as projected after 1989 is one of the causes for concern. Current thinking in the country suggests a future reliance on nuclear energy, but the financial implications of that alternative appear to be prohibitive at this time. Additional alternatives must be given consideration and this subproject is designed to provide information and experience with solar and wind renewable energy sources for rural economic development.

An additional purpose of the project is to increase the understanding

of Tunisian decision makers of the limits and value of selected renewable energy technologies in order to give them the capacity to decide when and where they should be introduced into rural economic development programs. Renewable energy forms should also be evaluated for their applicability to the regional economic development program in Central Tunisia.

Traditionally, rural electrification involves extending the grid and offering electricity to a village. Where electricity is available, its supply is essentially unlimited in time and in amount. The limits to its use are set by economics and what a family can afford. However, under this project, electricity will serve only a part of the energy needs of the village; cooking, for example, will continue to be done with gas In outlying farms, energy sources will still be diesel, kerosene, wood and gas. Energy supplied by solar systems will not have the same characteristics as that provided by a central grid. Energy available from a solar system will depend on the size and efficiency of the collector, the amount and intensity of sunlight, the amount of storage capacity (batteries) and the demand or use rate. The system will be limited and thus its use must be regulated and limited by other than economic means.

The testing and demonstration of an alternative energy system must be done in a village where there are a variety of possible uses. Because alternative energy systems will be limited in their size, it is important to select a village where demand or use will grow beyond the capacity of the system to test how both the system and the user can adapt to accommodate this characteristic.

Subproject 1, District Application of Renewable Energy, consists of eight technologies for four major functions. The first function envisages the research and demonstration of photovoltaic pumping combined with drip irrigation to obtain faster growth of young fruit trees in a semi-arid region. The purpose is to provide the most efficient use of the scarce water resource, while at the same time adding the benefits of controlled irrigation to arboriculture. In Tunisia there are several possible fruit trees which can benefit from these technologies: orange, tangerine, lemon, apricot, fig, date, plum, peach, and pear. While drip irrigation may save some ten percent of the water used in normal surface irrigation when applied to mature fruit trees, savings may surpass sixty percent when used with seedlings and young trees due to the reduced diamter of root area to be reached. Photovoltaic pumping is, at today's prices, most economic for micro systems or where several functions in addition to pumping are contemplated. Since drip irrigation uses far less water than normal open trench irrigation, the characteristics of the two are highly complementary.

The second function uses well-developed solar thermal technology in conjunction with a passive solar greenhouse to permit increased crop yields and an extension of growing seasons. The crop planned for the demonstration project is tomatoes. The income benefits to the farmer are substantial due to increased yields and higher prices which prevail in the off-season. An additional benefit may come from the furnishing of tomatoes to the canning industry; at present the tomato canning factory near El Kef works only during the summer months, when crops are harvested.

Currently, the use of greenhouses in Tunisia is limited since there is no means of storing heat during the day for release at night. In the project, several greenhouses would be equipped with solar thermal hot air collectors which would transfer heat to a storage system using natural convection currents. During the night this heat would be released. The system is designed so that the temperature will not fall below four degrees centigrade, the minimum allowable for tomatoes.

The third function is designed to pump water for traditional irrigating practices, but not with fossil energy sources. Several pumping operations will be carried out with the use of wind and photovoltaics, creating familiarity with important future technologies. While wind was used before diesel pumps were introduced, its reintroduction with storage systems to provide light and power puts wind in the modern category. Photovoltaics, though not economically competitive at this time for larger uses, should eventually be affordable. Demonstration of their potential is necessary now so that the test period can be completed and technical feasibility established by the time costs become competitive.

The fourth function provides lighting to homes, institutions and businesses, as well as heat for an infirmary. The desire to minimize rural-urban irrigation and to concentrate people in villages in central Tunisia has resulted in a need for rural electrification to help make village life more attractive. Tunisian officials have noted that they could not expect increased yields through solar energy applications to agriculture if the peasants were leaving the country to go to Tunis. The design of Subproject 1 uses photovoltaic sources for light in village

homes, stores, workshops, school and infirmary. Solar collectors will be used for space heating in the infirmary where severe cold has hampered patient care.

It will not be feasible to provide every home with lighting; for 60 houses 150 watts per house is planned. It should be noted, however, that even in areas presently served by the electric grid, few rural homes have any electric lighting at all. In the smaller villages electricity generally is used for agricultural and commercial purposes. In Hassi El Frid not every home can afford electricity and it is expected to be some time until all 60 houses are connected.

These four functions provide a breadth of experience that will give concrete expression to the planning of a renewable energy future. The variety of functions and technologies should provide information for extensive application. AID will be responsible for early introduction of technologies that can have substantial impact later.

Subproject 2, Training in Alternative Energy Applications, is designed to assist major consumers of energy, especially in the government sector, to determine where and when to introduce solar energy into the country. The actions to be taken in the light of uncertainty of fossil fuel reserves and ability to offset rising petroleum costs are a matter of national risk assessment and the responsibility of the Tunisians. However, the technology characteristics and the issues surrounding the introduction of technologies can be presented in an objective international setting. The training program outlined below aims at three different audiences in three discrete programs so that pertinent information can be transferred.

One audience, the high-level bureaucrats who manage energy production or who are responsible for managing high levels of consumption, will be offered a short, intensive course. Another group, their immediate subordinates, will be offered a somewhat longer course so they may carry out their duties at the technical level. Lastly, some specialized experts will be offered advanced training in the United States.

All groups will be offered an opportunity to participate at some point in Subproject 1, District Applications of Renewable Energy, so that they can achieve some practical exposure to the issues discussed. The management training will be sensitive to the existing system for making energy decisions.

The renewable energy training is not the only training associated with the project. Subproject 1 includes training for site personnel at a much lower operational level, but its budget and design are separated from the training for the management audiences.

With the credibility of the technology which should emerge from Subproject 1 and the training from Subproject 2, AID can expect that a relatively small effort will provide multiplying results. When the decisions on which renewable energy technologies to follow are taken, the Government of Tunisia will have had experience with a variety of technologies put into place by this project.

C. Evaluation

Regular annual project evaluations will be jointly held by the Government of Tunisia and AID. At such time the following will be evaluated: a) progress toward attainment of the objectives of the project; b) identification of problem areas or constraints which may inhibit such attainment; c) recommendations for solutions to problems identified; d) to the degree feasible, progress

toward attainment of overall development impact of the project; e) progress toward supplying project inputs and achievement of outputs.

III. A Relation to AID Objectives in Tunisia

This project will support the GOT's efforts to address the problems of the most disadvantaged sectors of the population. In the FY 1981 ABS, USAID/Tunisia stated that two basic components characterize the dual thrust of its assistance to this middle income country - one of them being technology transfer. This project as originally conceived formed part of the larger Science and Technology Phase II Project. However, with the extension of Phase I of that project and consequent delay of Phase II, this important effort would not have been initiated for an additional year. The growing urgency which has been placed upon the examination of potential renewable energy sources by the GOT as Tunisia fuel reserves rapidly deplete resulted in the development of renewable energy as a discrete project to be funded in FY 79.

During its fifth development plan (1977-1981) the GOT seeks to accomplish four goals: full employment, social stability, increased standards of living and net food self-sufficiency. Although sub-project cannot have a significant impact upon the achievement of these goals in the short-term, its successful replication throughout the country will most certainly have an impact on all these goals. The provision of electricity will improve the standard of living in rural areas stemming some of the rural-urban migration; employment opportunities should increase in agriculture as growing seasons are extended through use of greenhouses and additional irrigation. Opportunities in small industry, particularly related to canning and preserving of increased agricultural produce, should be possible.

Sub-project 2 seeks to institutionalize a decision-making capacity in energy within the country. This activity is extremely important in light of USAID's phase-out strategy as it will serve to strengthen the GOT's ability to continue its own scientific and technological development and apply the knowledge gained to its social and economic problems.

The Renewable Energy project is complementary to the USAID's activities in Central Tunisia - the other basic component of the Mission's program. This project is in Central Tunisia and the project site was chosen by the Mission and the GOT for its proximity to the Central Tunisia Rural Development project and its potential for replicability throughout Tunisia.

TECHNICAL ANALYSIS SUMMARY

A. Subproject 1. - District Energy Applications

1. General Objectives and Expectations

The most general objective for the District Energy Applications Subproject is the provision of energy for economic development. Because of actual and anticipated disruptions in the flow of cheap energy on which previous economic development in Tunisia has been based, it is necessary to seek alternative energy forms. These alternatives should be both known and understood prior to their mass introduction by projected marketplace pricing forces. This rationale is based on the desire to avoid political and social disruption attendant on the uncertainties of fossil fuel availability and costs as world known reserves of oil and gas are depleted.

The purpose of Subproject 1, District Energy Applications, is thus simply stated as an early demonstration of the utility of solar and wind technologies to provide an alternative base for continued rural economic development. The village and District of Hassi El Frid has been chosen as the site for this early demonstration. A number of technologies and applications are to be included which will both benefit the people in the District and provide information on the technical, social, and economic utility of alternative energy sources. If these social and technological demonstrations prove successful, additional studies will be necessary to define where in Tunisia they can be replicated to return the most benefits.

2. Description

The village of Hassi El Frid (roughly translated as the "only water source") (see Figure 1B) is approached over passes through the mountains which separate it from the capital of the Governorate, Kasserine, in Central Tunisia (See Maps I and II). Approximately 45 kilometers by road from this modern town, the village of 80 families (600 people) is remote, but not completely out of contact with larger towns. The first visual impression is one of self-sufficiency, for it is located on a large, flat plain which is surrounded by mountain barriers that inhibit the flow of people, goods, and services, and from the point of view of this demonstration, make central grid electrification prohibitively expensive. Annex 7 contains additional information on the village and district. Annex 8 also contains cost estimates for providing central electrification to the village.

The approach to the village is through fields which are occasionally covered by wild grasses (alfa, used in the production of paper in a factory in Kasserine) but which otherwise are barren. Only at the point where a first distant view is had, through the buildings reflecting the strong sunlight, do the lands become cultivated, primarily in forage crops, especially cactus. Agriculture becomes more intense as the village is approached; dry cereal production appears, then fruit and nut trees, and finally, with the appearance of the two wells providing irrigation, two plots of three and four hectares of truck garden vegetables.

The first application of renewable energy will be to provide water to intensify the current agricultural yield, both by better watering of present crops and by changing the cropping pattern to produce more

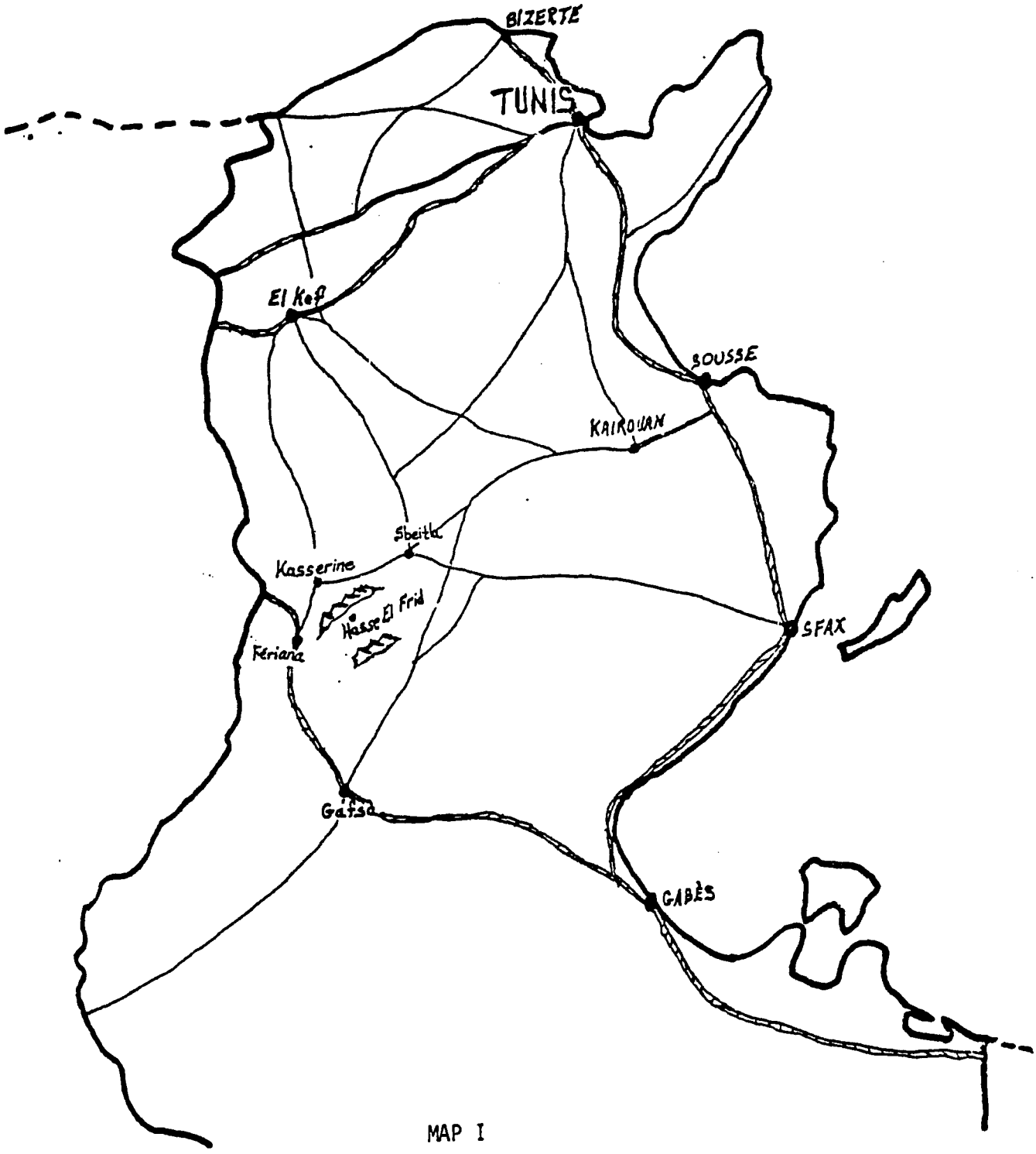

MAP I

Hasse El Frid: Orientation Map

principal trunk highway
other long-distance road
mountain range
city or village
0 10 50 100 Km

Sbeitla

Kasserine

Hasse El Frid

Fériana

MAP II

Relationship to Hasse El Frid
to Nearby Towns

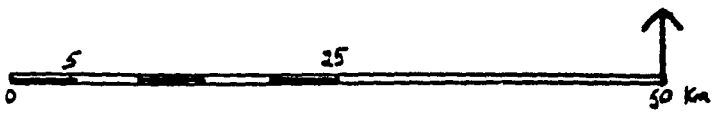

FIGURE 1

GENERAL LOCATION MAP* OF VILLAGE OF HASSI EL FRID

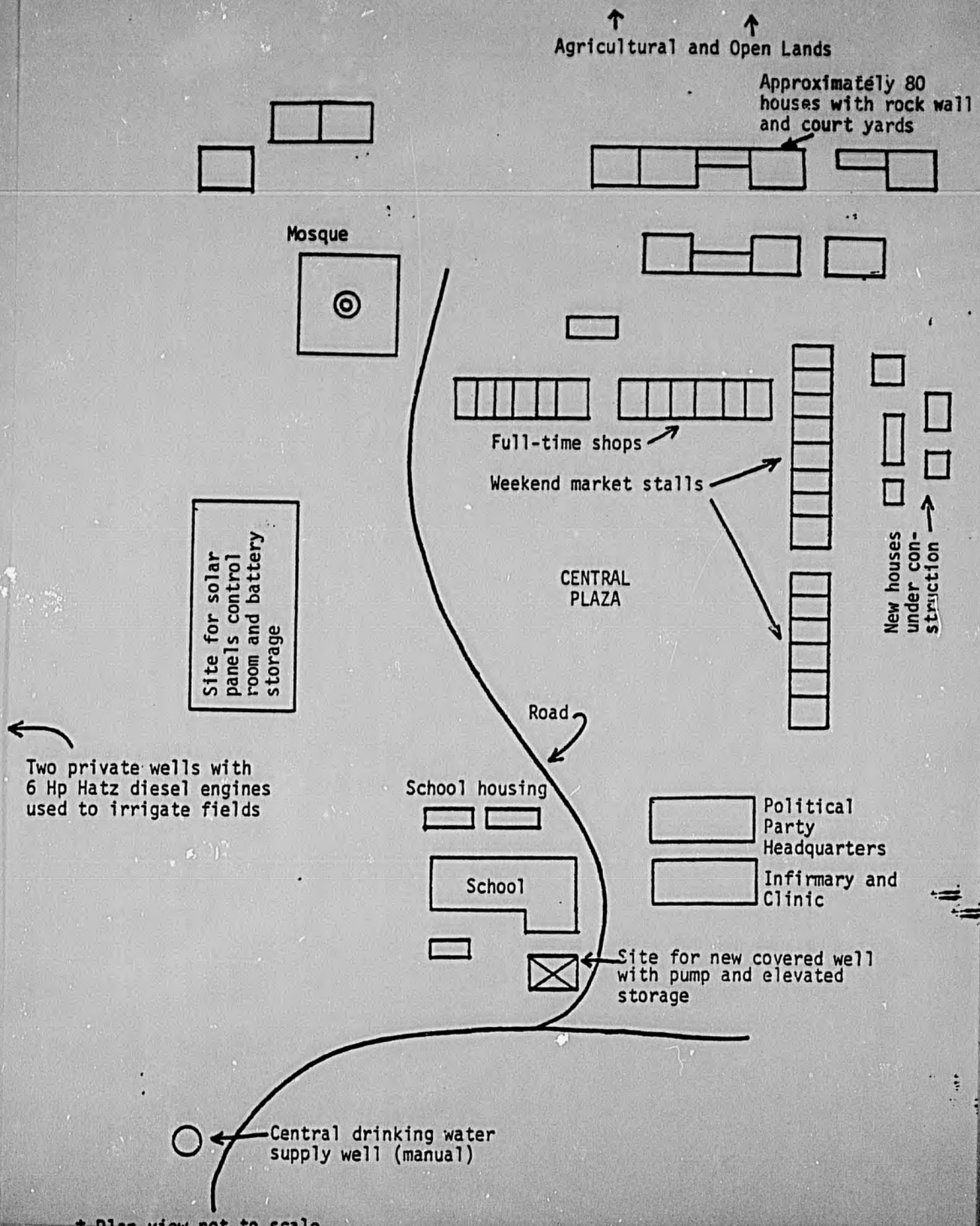

* Plan view not to scale

valuable crops. As will be discussed in more detail in the technology and economic annex, an expectation of the Ministry of Agriculture is that cereal yields are better in other parts of Tunisia, and that irrigation should be used in the interior to introduce new, more valuable, cropping patterns, especially in certain truck farming vegetables: beans, tomatoes, melons, and peppers.

To make the agricultural policy a reality in the District Hassi El Frid, photovoltaic panels will be placed in the fields to power small pumps for a few new wells. The ultimate groundwater potential of the plain is currently under investigation, but the proposed demonstration project is small enough to fit within the safe yield. Annex 9 contains data on the major existing wells near the village of Hassi El Frid.

As a water and energy conservation measure, young fruit trees will be watered by a system which combines photovoltaic panels and drip irrigation. Evapotranspiration from the trees is greatly influenced by sunlight, and so is the production of energy from the solar panels, thus facilitating an equilibrium of water supply and demand.

In addition, the Agricultural Ministry would like to encourage after-season growing of vegetables through the use of greenhouses. Passive solar designs with active assists will be used to extend the growing season and bring better prices and availability of vegetables in the winter season.

In the village the project activities will include relocation of the existing village water supply. Currently, the well is open and is located almost 400 meters from the market place and houses. Drilling

and covering a new well and providing storage at a location near the school (see Figure 1) can avoid contamination and illness and provide a more convenient supply point. Pumping from the well to storage can be driven by solar energy.

Also, when the merchants in the market place were interviewed in the village, they indicated that electricity was needed for lighting so that productivity could increase both through extending the working day and through providing power for machines. The local tailor wanted to replace the foot treadle sewing machines; a miller's flour mill whose gas engine was beyond repair and a gas-powered refrigerator which was not working are candidates for electrification. The local repairman neede light at night so he could provide maintenance for machines when they were not in use during the working day. The local health official noted that he often had to condemn perishable foods in the summer, thus indicated a need for refrigeration.

In sum, the time spent reviewing projected needs in the commercial sector indicated that solar energy applied to workshop lighting, small manufacturing and milling machines, and refrigeration would better prepare merchants to service the weekly market and meet the daily needs of the villagers. Thus, just as economic performance would improve in the agricultural sector, the commerical sector also appears ready for expansion through the application of renewable energy.

However, focusing entirely on direct economic productivity will not suffice, for the population will leave the villages and contribute to urban congestion unless amenities are provided in the village itself.

This demand for amenities was emphasized by the village leader. His judgment for priority uses of energy were first, lighting for homes; second, for communications devices, radios and television; and only third, pumping power for wells and energy for the infirmary. This ordering was poignant testimony to the need to apply renewable energy to the daily life infrastructure that lay at the base of economic productivity.

The project, therefore, includes power to provide 150 watts of electricity for each of 60 families, to be used by them for their priority needs. Wires will be run to blocs of individual homes from a common bank of photovoltaic panels and energy will be provided from storage batteries for approximately four hours a day. This supply of electrical service will not always meet all of the demand. As experience with the use of electricity grows and village growth continues the demand will outstrip the supply. However, this is likely to be the case for any fixed photovoltaic and battery storage based system. Thus, in Hassi El Frid, the restriction in size and storage capacity of the system will cause the supply/demand imbalance to occur more rapidly. While this condition is not often experiences with central grid supplied systems it does occur with local diesel powered plants and will occur more often with photovoltaic systems. In the beginning, the system will have excess capacity and it will take many months before connections and uses cause the demand to outstrip the supply.

Because the supply system cannot always meet the demand, two use control mechanisms will be necessary. One control mechanism will involve

limiting the number of corrections and the uses per connection. In the village, no more than 60 households at 150 watts peak demand per household can be accomodated. At first, fewer households and a small peak wattage demand will be connected. As the connections grow, the total residential system demand will be managed to produce no more than 1 peak Kw of use. A second control mechanism which can be employed is the number of hours of use per connection. At some point it is expected that with 60 house connections at an average of 150 watts per connection and with the prevailing winter solar regime in Hassi El Frid, the system may only be able to provide 4 hours of use per day for the residences. Actual experience with the system may prove that more electricity will be available for a longer time.

The above-described individual uses of electricity in houses and in the market place will not satisfy all the typical needs found in villages. Additionally, and very important to rural villages, are the public places. The public sites which are candidates for electrification (aside from the previously mentioned public well) include lighting the school for winter and night operations, lighting and power for radio/TV in the party headquarters (which serves as a community center) and light and power for the infirmary. The infirmary will also benefit from solar hot air space heating and hot water for washing and patient care. Currently, the infirmary is often too cold to treat patients adequately. Lastly, a small amount of regrigeration will be provided to store medicines. These applications of electricity to education, health, and welfare can dramatically change village life and make it more attractive. It is likely that, upon completion, the mosque also will be lighted.

Using the available sunlight and wind, through the medium of renewable technology, Hassi El Frid will be the first solar and wind powered village in a developing country to demonstrate that rural economic development can proceed in the future, despite the unavailability of fossil fuels. The village demonstration will show that rural life can improve both in economic productivity and basic amenities. The demonstration will indicate technological feasibility, if not economic feasibility, under current limited volume manufacturing costs and approaches to solar technology. Current cost of oil also makes central grid and diesel-based power less expensive, but the important part of this demonstration is to provide Tunisian decision makers with actual applications that show rural economic development can continue, even after Tunisian oil reserves are depleted. This fact is by no means now evident to Tunisian leaders. In the early eighties it will be possible to "visit" the future eighties by asking villager what life is like in a renewable energy environment. Hassi El Frid will provide early knowledge to help plan for the next generation of economic development infrastructure.

The average solar radiation at Hassi El Frid is estimated to be 972 langleys and there are 3150 hours of sunlight per year. This is approximately 5.5 Kwh/m2 of surface/day and 8.6 hours of sunlight per days. Table 1 contains a summary of the planned solar and wind powered applications in the District. Table II shows the characteristics of the photovoltaic system to be used in the village. More detailed data for the five agricultural and village applications are found in the technical Annex 6.

The details of the system, i.e. whether there will be separate battery storage groups dedicated to each sector in the village or integrated panel and battery storage and whether there will be only one system will be decided during the engineering design phase of the project. The following issues will also be resolved during the design phase:

- The exact location and specific nature of the 5 agricultural applications.
- The priorities for supplying the various sectors of the village based on the depth of discharge of the batteries.
- The management and operational plan for the system in case of extreme meterological or use conditions.

Table I

Planned Technology Applications and Uses in Hasse El Frid

TECHNOLOGY APPLICATION	NUMBER OF INSTALLATIONS	LOCATION/USE OF ENERGY
1. Wind driven (farm or aeromotor type windmill) mechanical well pumping	2	1 - 2 Hectare Farms outside village for supplemental irrigation of wheat or forage crops
2. Wind derived electricity (2 - 3 bladed horizontal windmill)	2	1 - 3 Hectare Farms outside village for supplemental irrigation and lighting
3. Solar powered/regulated drip irrigation (photovoltaics)	2	2 - 3 Hectare Farm outside village for new/young fruit trees
4. Solar derived electricity (photovoltaics)	4	2 - 3 Hectare Farm outside village for irrigation of a range of crops and lighting
5. Greenhouse with active solar hot air heating and wind powered mechanical well pumping	2	Land near village and wells for growing winter vegetables and protection against freezing
6. Solar derived (photovoltaics) electrical system for priority public uses	1	Heat, refrigeration, communication, lighting and power for infirmary, school, central village water provision and party headquarters
7. Solar derived (photovoltaics) electrical system for village commercial uses	1	Lighting, refrigeration, cooking and mechanical power in village center
8. Solar derived (photovoltaics) electrical system for village residential uses	1	Lighting, radio, TV and other in-house uses.

TABLE II

SUMMARY OF ESTIMATED VILLAGE POWER NEEDS AND THE PROPOSED PHOTOVOLTAIC POWER SYSTEM.

Village use Sector	Estimated Demand KWH/YEAR	Size			
		Panels Peak Kw		Storage Amp-hours*	KWH**
PUBLIC	1,600	4.0		334	--
COMMERCIAL	7,363	6.5		834	--
RESIDENTIAL	13,140	9.0		583	--
TOTAL	22,103	19.5		1,751	210

* Storage in amp hours calculated assumming discrete storage systems for each village sector,

** This value calculated based on a system voltage of 120 volts.

It has been decided that the distribution system will be two wire single phase 120 volt AC. Although DC power might be appropriate for certain photovoltaic applications, the following conditions favor the use of AC:

- The remoteness of the village and the availability of AC equipment and repair services in nearby villages dictates that easily available (AC) home appliances and repair services be built into the system.
- STEG, the Tunisian Government controlled utility, supplies AC power to all remote villages which are a part of their rural electrification plan and will continue to do so.
- The variety of potential uses of power expected in the village favors alternating current.

The five agricultural applications plus the village project will cost US $1.185 million (this figure includes AID, GOT, and Peace Corps cost estimates). The two wind powered electricity installations (see table I) are not scheduled for implementation until the second year of the project. At present wind data for the site are not available and data for surrounding areas indicate that wind driven electrification is possible but marginal. However, since the wind regime is highly influenced by the local topography and micro meteorology, the first project year will be dedicated to collecting wind data and to selecting the most appropriate site for these installations.

This village and agricultural solar demonstration subproject will be managed by personnel from STEG who will be assisted by a project committee. The committee will include representatives from at least

the following:

The Ministry of Industry, Mines and Energy

STEG

The village of Hassi El Frid

The Governorate of Kasserine

The Ministry of Agriculture

The Central Tunisia Project

USAID

To facilitate the start up and management of the subproject and the transfer of routine management to STEG and the villagers, Peace Corps volunteers will be utilized during the first two project years.

The subproject will be conducted in several phases. Phase I will involve detailed project engineering design, preparation of specifications requests for proposals and bidding documents. This phase will also involve the village baseline socio-economic study. Phase II will involve equipment supply, construction, operation and maintenance training and startup and commissioning of the demonstrations. Phase III will involve operation, data collection and evaluation. The subproject will cost $1,185,000 with 909,070 being an AID grant, $182,650 being Tunisian counterpart funds, and $93,000 Peace Corps contributions. It is expected that the subproject technologies will be operable for many years. Thus data and services from this demonstration will be derived over a long period of time.

As the village population and electricity uses grow, it is possible that the size of the systems will not be adequate. If this occurs far enough in the future (mid-1980) and the costs of photovoltaics decline

as they are projected to, expasion of the system might be economic. When this occurs the demonstration will have become socially, technologically and economically replicable.

B. Training in Alternative Energy Applications

1. General Objectives

There is much interest in alternative, renewable energy sources in Tunisia, on the part of both policy makers, and second echelon technical personnel. This interest is found within the Ministry of Industry, Mines and Energy, the Ministry of Agriculture (Direction de la Production Vegetale); the Centre de Recherche du Genie Rurale; Societe Tunisienne de l'Electricite et du Gas (STEG); Ecole Nationale d'Ingenieurs de Tunis (ENIT); and Entreprise Tunisienne d'Activite Petroliere (ETAP). It is not, however, built on a firm appreciation for and understanding of the technologies involved, their economics, and their practical application. Much of the information has been acquired informally by Tunisians attending various international conferences. Since gnerally only senior persons are able to attend such conferences, information tends to be concentrated at the top. There is little trickle down of information and information may often be incomplete.

On the other hand, Tunisia possesses a cadre of engineers who are well-trained in traditional energy sources and increasingly in nuclear technology. The Ministry of Agriculture has a number of able persons with backgrounds in hydrology, agronomy and agricultural economy. There is thus a basic stratum of technical and scientific ability which could easily absorb knowledge about renewable energy.

Tunisian officials and AID personnel discussed the idea of a training course in renewable energy. Tunisia's fossil fuel reserves willstart declining within a decade. Although nuclear energy is still considered too expensive for Tunisia, and presents unknown hazards, nuclear energy is being considered seriously. Renewable energy is looked upon as a partial solution to the energy dilemma, and it is felt that more understanding of it is needed. The need for training in renewable energy exists at two distinct levels: At the policy level, there is a need to develop an appreciation of what renewable energy can contribute to Tunis's development and future energy needs, as well as an understanding of present and projected costs. At the technical level, engineers, economists, and various development officials need a complete understanding of the technologies, their costs, applications and manufacture. Officials at this level need access to international sources of information, so that Tunisia can remain abreast of the state of the art in each technology.

2. Subproject 2 Description

On the basis of the above a training activity including a renewable energy and energy policy course, a renewable energy technologies and applications course, a solar desalinzation specialist visit and a fellowship program has been developed.

The Renewable Energy and Energy Policy course will be a one day course held outside Tunis and attended by up to 15 senior energy policymakers in the Government. The course is desinged to create a broad-based awareness of renewable energy and to stimulate consideration and use

of renewable energy where possible in development. This course will cover a wide range of subjects and be presented by training personnel familiar with Tunisia's potential and expectations. The renewable energy technologies and applications course will be held in Tunis and at the site of the demonstration project in Hassi El Frid. The course is scheduled for several hours each day over a two week period, and is designed for up to 25 participants. It will provide broad technical coverage of alternative energy sources which appear to have promise for Tunisia. This course is for senior technical people in various government Ministries. A solar desalinization specialist will visit Tunisia for 5 to 10 days to work with persons in the Government to identify potential projects for further consideration. The fellowship program for 3 GOT appointees will involve four months in the US at an educational institution studying various aspects of energy planning and alternative energy technologies and applications.

The total training in the Alternative Energy Applications subproject will be performed in four phases. The first phase will involve formation of the training team and preparation of materials and will require four months. The second phase will include the actual course presentations. The first course in Tunisia will include renewable energy and energy policies. The second course, renewable energy technologies and applications will be scheduled, after the district applications subproject is underway. The third phase will cover fellowships for specialized training in the U.S. and will be scheduled following the first two phases during the second project year.

The training subproject will take place within the Ministry of Industry, Energy and Mines, rather than within the Minstry of Education or any of the institutes. Because the training will emphasize the use of alternative energy forms and technologies to provide social services and produce economic benefits, it will emphasize and focus on applications rather than on the technologies and their performance. This practical rather tahn theoretical emphasis suggests that the training be handled by an arm of the Ministry of Energy, Mines and Industry rather than an educational office. The Ministry of Education should however, participate in the training. The current expectation is that training will be under the supervision of ETAP which has a technology and applications training program.

The total cost of the training subproject will be $97,555. The U.S. grant portion will be $90,930 and Tunisian counterpart contributions will amount to $6,625.

III. C. Economic Analysis

A general goal of the project is to increase the availability of useful energy in rural areas. This energy can be used for a variety of tasks - pumping, lighting, heating, mechanization, water purification, etc. - which result in better health and living conditions. Energy production is not an end in itself; we are concerned with the productive uses of energy. The benefits from increased energy use can range from those which are strictly economic (pumping for irrigation) to general societal benefits (education through improved lighting; improved health from cleaner water, refrigeration, hot water). Energy is only one imput into the system and the returns which are directly attributable to it cannot always be identified to any degree of relevance.

All the technologies included in the project will yield economic benefits in at least the above-mentioned ways. In some cases, using market or shadow prices, the economies can be quantified, but in all cases qualitative benefits will accrue. Except for the specialized training components, all benefits will be felt directly in rural areas.

The benefits are differentiated by subproject, as are the costs. Benefits also accrue from the total package as each integrated effort reinforces the other; both gain strength from the Central Tunisian Project. In addition to this variety of sources of benefits, there are different types of benefits. Some include traditional benefits of increasing agricultural

productivity; other less tangible benefits are included in the information gained to assist the transition away from fossil fuels. Still others include the use of energy issues as the subject area from which a "mature" relationship is being built with the government of Tunisia. This richness and complexity of anticipated benefits takes the analysis into a mix of quantitative and qualitative issues.

The first set of benefits associated with introduction of renewable energy technologies occurs with Subproject 1 in the village of Hassi El Frid both as a village site, and by extension to other rural areas where irrigation takes place far from electrification or where future diesel consumption will be limited by import restrictions. For the village itself, the benefits have already been described in general. The amenities that make life and work in the village rewarding to the inhabitants include a broad range of activities. The necessary data is not available to quantify the increased income to the farmer who will be able to sell vegetables in the winter months. Nor can we satisfactorily quantify the improvement of patient care in a heated infirmary.[1] We can, however, approximate the increased yield per hectare for agriculture that benefits from irrigation and consequent crop changes both in the village and as a demonstration for other villages.

---

[1] We can, to some degreee, compare costs of achieving similar benefits. This will be done below.

Hassi El Frid is in Central Tunisia and is part of the general area where cropping patterns are slated to change in the direction of irrigated cultivation of better forage and new fruit and vegetable production. Since previous extensive analysis of this region has already been accomplished,[2] it is not necessary to change assumptions on which the Central Tunisian Project is based. Furthermore, the few wells introduced as part of an energy demonstration do not themselves constitute a disruption of agricultural and marketing patterns anticipated in the Central Tunisian Project. A similar pattern of costs and benefits is, therefore, applicable.

Based on data from the Central Tunisia Project, the increases in yield by irrigation and changes in cropping patterns similar to those projected for Hassi El Frid should produce on the order of a nine-fold increased in farm family income.[3] Put solely in terms of increased yield of quintals of barley and wheat from irrigation, projections for improvements in the Central Tunisia Project area on the order of 100 percent improvement in three years, with individual farmers improving their yields 400 percent or more.[4] The Tunisian government projections for

---

(2) Agricultural Development in Central Tunisia (U.S. Agency for International Development Contract AID/afr-c-1139, July 1978).
An Assessment of the Agricultural Potential of Central Tunisia (U.S. Agency for International Development, Contract AID/afr-c-1139, April 1978).
Small Holder Irrigation Development (U.S. Agency for International Development, Project Number 644-0312.3).
Irrigation a Partir de Puits de Surface (Republique Tunisienne, Secretariat d'Etat au Plan et a L'Economie Nationale).

(3) An Assessment of the Agricultural Potential of Central Tunisia, op. cit., p. 90.

(4) Agricultural Development in Central Tunisia, op. cit., pp. 75-76

Included in that budget are costs of early introduction of the technology before its marketplace justifications; training, evaluation and administrative personnel for national demonstration purposes in excess of site needs; back-up technical assistance and spare parts due to the innovative nature of the subproject, and the remoteness and scale of the site which was picked to avoid conflicts with close-by electricity rather than for agricultural productivity.[8] The next step of analysis to be accomplished in an engineering study will reveal more precise costs, but it is unlikely that the agricultural productivity can suffice to justify the project. The benefits lie in meeting the additional objectives of the subproject.

Similarly, the technology selected to accomplish pumping, lighting, heating, and cooling is not the least cost for those functions. Central electrification and/or diesel power could serve this village with more power and be economically more competitive, but the alternative energy objectives of the project would not be met by these sources so their use is irrelevant. It is, however, relevant to know what the margin of difference of costs are at today's prices, if only to let us know that we are consciously subsidizing renewable energy for policy purposes. The cost of a diesel pump is TD800 ($1,900), fuel and lubricants are estimated to be TD70 ($175) and annual maintenance TD

---

(8) An alternative site visited by the team in Sers where the availability of groundwater and major agricultural expansion were more certain was rejected because (1) electrification was close by; (2) it was out of the Central Tunisian administrative structure; and (3) the farming was done in dispersed individual farms and did not provide the opportunity to demon-

($190).[9] The national cost of fuel and lubricants is underreported for the subsidized cost to the farmer is reported to be one-quarter of the export price Tunisia can get for its oil on the world market.[10] There is an energy pricing policy to gradually remove this subsidy to more closely keep up with the inflation of world oil prices. Indeed, in the last five years, from 1975 to 1979, diesel fuel prices increased by 47 percent.[11] If we conservatively assume a similar rate of increase in the next ten years of life of the diesel pump, the cost to the farmer will approximately double by the ned of the decade. This assumption still underreports the national cost of diesel oil, for Tunisians will probably have still higher opportunity costs for oil exports in the future. Nonetheless, a low annualized price for a diesel pump for shallow well use can be estimated as follows:

	10-Year Cost	Annual Cost
Capital Cost-Pump	$1,900	$190
Operating Cost - 10 Years	2,789	279
MaintenanceCost	1,900	190
TOTAL	$6,589	$659

This cost compares with the photovoltaic pump anticipated in comparable application at the four solar electric farm/systems at approximately $25,000 for a ten-year cost. The comparison is not entirely accurate for the projected farm application includes some electrification. If a generator were added to the diesel to make the services more comparable, the diesel

---

(9) Small Holder Irrigation Development, op. cit., p. 10

(10) This figure was mentioned orally by several energy officials in the government.

(11) See Table in Annex.

price might double. At that price the photovoltaic pump/ generator would still be twice that of the diesel. Thus, to provide early information about the utility of solar energy for village agricultural development, the subproject is probably paying about twice the price of more conventional technology.

This ratio of twice the price for early experience constitutes the economic issue of the subproject. If such projects were delayed several years until the price of photovoltaics drops to the expected low of $1.00 a peak watt, then the project would have a simple economic justification. The policy issue is whether the additional cost today is worth the information gained. We feel it is.

The subproject cost differential is actually only grossly estimated here. Since a grant is anticipated, the cost of finance is not included. As the Tunisian estimates of brining residential and commercial electricity to Hassi El Frid and the neighboring area vary between $400,000 and $500,000 capital costs, there is not accurate enough information to make a full comparison. In any case, central electrification would bring twice the capacity and perhaps increased reliability so that simple cost comparisons do not account for differences in level of service. The Tunisian capital cost estimated of $400,000 to $500,000 cannot be accurately compared to the $242,000 for the public, commercial, and residential ten-year cost (Table X). While the prohibitive cost of extending a line favors photovoltaci application, a village scale diesel generator could be

considered that would no doubt compete successfully at today's prices with photovoltaic sources.

The issue is one of paying now to find out how renewable energy can assist the path of development. The Tunisian situation is such that a good test can be found at this site and it is recommended that the additional price be paid to achieve early experience and knowledge about technical, economic, and social parameters that have major significance for developing countries in the future.

III D. Social Soundness Analysis

Tunisian social and political structure does not pose major obstacles to introducing new, more efficient technologies. Although all the impolications of the new technologies may not be evident, Tunisian officials, both national and local, as well as villagers were receptive to their demonstration. As this is a demonstration project geared primarily to understanding how the technology is used, on-going socio-economic evaluation will be important.

The village of Hassi El Frid appears very receptive to the technology. The project has been discussed at length with the two leading village officials: the Omda, a GOT appointee who reports to the délégué of Kasserine (who in turn reports tothe Governor of Kasserine) and the head of the local destourian (political party branch). Both officials are highly respected in the village and are actively involved in the development of their village.

The participation of the village is important because not everyone will benefit directly from the project. The villagers will have to establish their own priorities for services (see Annex 7 for further discussion). The project will benefit the whole village indirectly by bringing electricity to certain public places such as the school, infirmary, mosque and the community center. Improved health care is a likely result.

III E. Administrative Summary

The Ministry of Industry, Mines and Energy has responsibility within the GOT for coordinating all energy activities, conventional and renewable. STEG has been delegated responsibility for project by MIME. STEG will coordinate closely with the Ministry of Agriculture and other concerned institutions in implementing the project. It will establish a coordinating committee at the national level and a working committee at the project site.

III F. Environmental Concerns

This project will have a limited impact on the environment. Annex 4 discusses possible environmental effects.

IV A. Implementation Plan

This project will be a Host Country project with the USAID Mission in Tunisia providing assistance thruough the science and technology advisor and staff and with AID Washington Near East Bureau staff also contributing specific skills. Subproject 1 - District Application of Renewable Energy will be managed by the Tunisian Ministry of Industry, Mines and Energy with assistance from a U.S. contractor. Subproject 2 Training in Alternative Energy Applications will be managed by the same Tunisian Ministry with the overall U.S. contractor providing personnel and consultants.

The overall project will be phased such that portions of both subprojects can be integrated. This arrangement minimizes duplication but does not restrict progress in one project because a portion of the other is eliminated or behind schedule. At this time it is anticipated that if both subprojects are implemented some economies of scale can be realized. The overall adminstration of the project at the USAID Mission will be handled by the Science and Technology Advisor and his/her Tunisian staff. The organization of the Tunisian project is described below.

Detailed implementation plans for project components are given in the technical annex (Annex 6). Overall responsibility for managing the project rests with the MInistry of Industry, Mines, and Energy (MIME). Implementation of other components will be assigned by MIME to other organizations either directly or through sub-committees or working groups. (See Figure 1.) The more important participating organizations are STEG (electricity installation and village project operation)

and the Ministry of Agriculture (extension services). In as much as STEG as an agency is primarily responsible for generating electricity, it will turn to other government ministries and agencies, such as Agriculture and Public Health, for assistance in implementing other project components. A coordinating committee should be created for this purpose.

A project officer will be appointed within STEG. It will be that person's responsibility to coordinate the work of various organizations, to monitor the project and to assure that schedules are adhered to and work is carried out within the scope of approved plans. STEG will also appoint a site manager who will coordinate activities in the district of Hassi El Frid on a daily basis. STEG will also be responsible for ensuring that sufficient GOT funds are available to carry out the activities of participating GOT ministries and agencies.

The Ministry of Industry, Mines and Energy already has the capability to handle both subprojects under this project. This is especially true for Subproject I, the District Application of Renewable Energy. This project requires the provision of energy to various uses in the District of Hassi El Frid. STEG is already responsible for electricity planning and is equipped to implement the GOT rural electrification and power porgram. This responsibility includes consideration of alternative energy resources and technologies. They also have a cooperative program with the Ministry of Agriculture to supply low cost diesel or electric water pumps to rural users and are owrking with them to assure that both the need for pumping exists and that the pumping

system matches the agricultural need.

In the training subproject STEG has an ongoing program at the national engineering school (ENIT) to fund programs and supply personnel to help in alternative energy capability development. STEG also has an ongoing regional training center in which its employees are trained in various aspects of the agencies work.

Ministry of Agriculture

The Ministry of Agriculture, through the Centre de Reserche du Genie Rurale, will provide STEG with agricultural technical assistance. It will be involved in designing and monitoring the photovoltaic powered drip irrigation (PPDI) system, the greenhouses, pumping activities and in introducing new agricultural practices where appropriate.

Coordinating Contractor

A coordinating contractor is needed to provide a link between MIME (STEG) and the United States energy community. The primary role of the contractor will be to help make arrangements for study tours and for the timely provision of commodities and services. The contractor will also assist STEG, where appropriate, in overall project management.

USAID and other United States Government Agencies

USAID will assist the GOT in project implementation, monitor the project, provide necessary AID approvals, participate in evaluations, and generally perform all the functions normally associated with an AID monitoring role.

The Peace Corps will provide at least two volunteers to work at the project site with Tunisian counterparts. One volunteer will have an electronics background; the other an agricultural background.

The phasing of significant elements of both subprojects is seen in Figure II. Within subprojects the following scheduling is anticipated: the District Alternative Energy Applications subproject will have three phases; the Training Subproject will have four phases.

Phase I of the District Alternative Energy Applications Subproject will involve detailed design, a sociological-anthropological study and procurement of equipment. This phase will take nine months from the start of the project. Phase II will include assembly and erection at the subproject site and startup. This should take an additional five months. Phase III will involve project operation and monitoring for 13 more months. AID funding is expected to be terminated by the end of FY 81 due to changing emphasis in the overall AID program in Tunisia. Mr. Laterie of STEG has indicated a willingness to assume complete responsibility for the District Applications Subproject after this time. AID can continue to disburse committed funds after 1981 but presently no new funding is anticipated after this date.

The introduction of this technology to the District of Hassi El Frid implies some instruction at the subproject level. The training would take place beginning in Month 10 (Equipment Installation) of the subproject, and would principally involve the farmers and villagers using the technologies in various applications. The farmers should participate in the installation of the new energy sources on their farms; this will give them a chance to achieve hands-on familiarity

at an early stage. The villagers should also be involved in the village electrification application.

Agricultural use instruction in this subproject will be divided into two stages. The first stage will be concerned with the techniques of inspection, cleaning, maintenance and adjustment for the photovoltaic power systems, pumps, filters, irrigation tubing, windmills, and electric systems. This stage will last approximately two weeks, but will necessarily be staged according to the progress of installation. The farmers will have to learn to use the new energy sources in connection with the designated agricultural uses. In fact, it is planned to have the Ministry of Agriculture working with the Central Tunisia Authority, begin to sensitize the farmers to the agricultural changes which will have to be made as early as Month 5 (During Engineering Design) of the subproject. Thus the second-stage training mentioned above will be a summary and reinforcement of information already discussed over a period of several months. The second stage will last six weeks. With the overlap between the stages, total time for this training will be two months. The second stage will be handled principally by the Peace Corps volunteers and the STEG and Ministry of Agricultural personnel.

In addition to the foregoin, special training will have to be offered with regard to the battery storage system. A local STEG technician and a Peace Corps volunteer trained in electronics will be instructed by the assembly personnel in prevention of excessive current drain to the system, and also how to transfer storage load capacity from one part of the total village system to another, or from the village system to an outlying installation, to take advantage

of available excess solar or wind generating power.

Conversations have been held with USAID and the Peace Corps in Tunis about the possibility of using Peace Corps volunteers to provide electronics and agricultural technical assistance throughout the first two years of the project. The Peace Corps Director in Tunis has agreed to ask for volunteers to participate in this project.

In the AID contribution to the project there are funds for a meteorological station (measurement of solar insolation, radiation, wind and rainfall data). However, this station will not be supplied until after the seventh month of the project. In order to collect meteorological data earlier it is expected that the GOT will provide a temporary station starting the third month and keep this on loan to the project until the installation of the AID supplied station. The one district application which is not scheduled for immediate demonstration is the wind driven electrification of two farms. Based on an evaluation of presently available data, the year-round winds (intensity and duration) may not be sufficient to make Hassi El Frid a reasonable place to demonstrate this technology. Thus, most of the first year will be dedicated to collecting wind and other data. At the end of one year a decision will be made as to whether the wind electrification equipment purchased should be installed in the District or at some other place. The analysis of the existing wind data did identify that wind driven mechanical pumping was reasonable for the area and this technology will be installed immediately.

The training subproject will involve four components. Details of the training courses are found in Annex 6. The renewable energy and energy policy course would be a one-day seminar for approximately 15 of the highest level GOT policy makers. This course will be held in the first year of the project and the GOT participants will be suggested by the Minister of Industry, Mines and Energy. An exact date and place for the seminar will be chosen early in the project. Details of this course are described more fully in technical Annex 6.

The Renewable Energy and Technology Applications course is scheduled for the beginning of the second project year. It will involve ten days of lectures three hours per day with a two-day visit to the Hassi El Frid Project. The 25 participants will be drawn from the high technical level of the various ministries involved in using or relying on energy in their development programs. At least one representative should attend from each such ministry. The exact date and location for this course will be selected early in the project when the completion date of the Hassi El Frid Applications is known.

The third training component will involve hiring an expert in solar and alternative energy powered desalinization. This expert will spend two weeks in Tunisia working with personnel designated by the Ministry of IME in studying and planning Tunisia' approach to desalinization. A date for this trip is tentatively scheduled for October 1980; however, an earlier visit is possible. Specific details will be worked out once an expert is chosen.

The final training subproject component involves sending three Tunisian Government employees to the United States for four months of

training in various aspects of Alternative Energy use and technology. It is suggested that each trainee come from a different ministry. The specific training program for each trainee will be worked out by the trainee and the AID and Tunisian project managers.

There will be a good opportunity to collect data on a variety of activities. The evaluation of this project is important for many reaspons and should be thoroughly planned prior to the startup of the Applications. The final decision on evaluation will be arrived at by involving STEG, AID, Agriculture, ENIT, and the people in the District. Since the purpose of the project is to test whether, when, and how the technologies are applicable in Tunisia, data collection is important. The AID personnel in DS/EY will be working on evaluation plans for other similar projects and thus their input will be helpful. Because of this it is anticipated that they will work with the above-named entities to develop the approach and procedures necessary for thorough evaluation.

It must be stressed that Hassi El Frid was chosen as a demonstration site for several reasons. Thus, it may not be the optimum site based on any single criterion. Rather it is optimum when all are taken into account. (See Annex 6 for a description of criteria used to select the site.) For example, even though water is somewhat limited and it is not likely that large amounts of land in the valley could be irrigated by any technology, there is sufficient water to demonstrate that the combination of solar energy and innovative agricultural practices can be beneficial for Tunisia. Hassi El Frid is an optimum demonstration

area in that it has enough of all the resources necessary to allow the alternative energy technologies and applications to be accurately and thoroughly tested. To expect or require that it also be an ideal place to expand all these demonstrations to wide spread use would not be realistic.

Figure II

PROJECT IMPLEMENTATION SCHEDULE

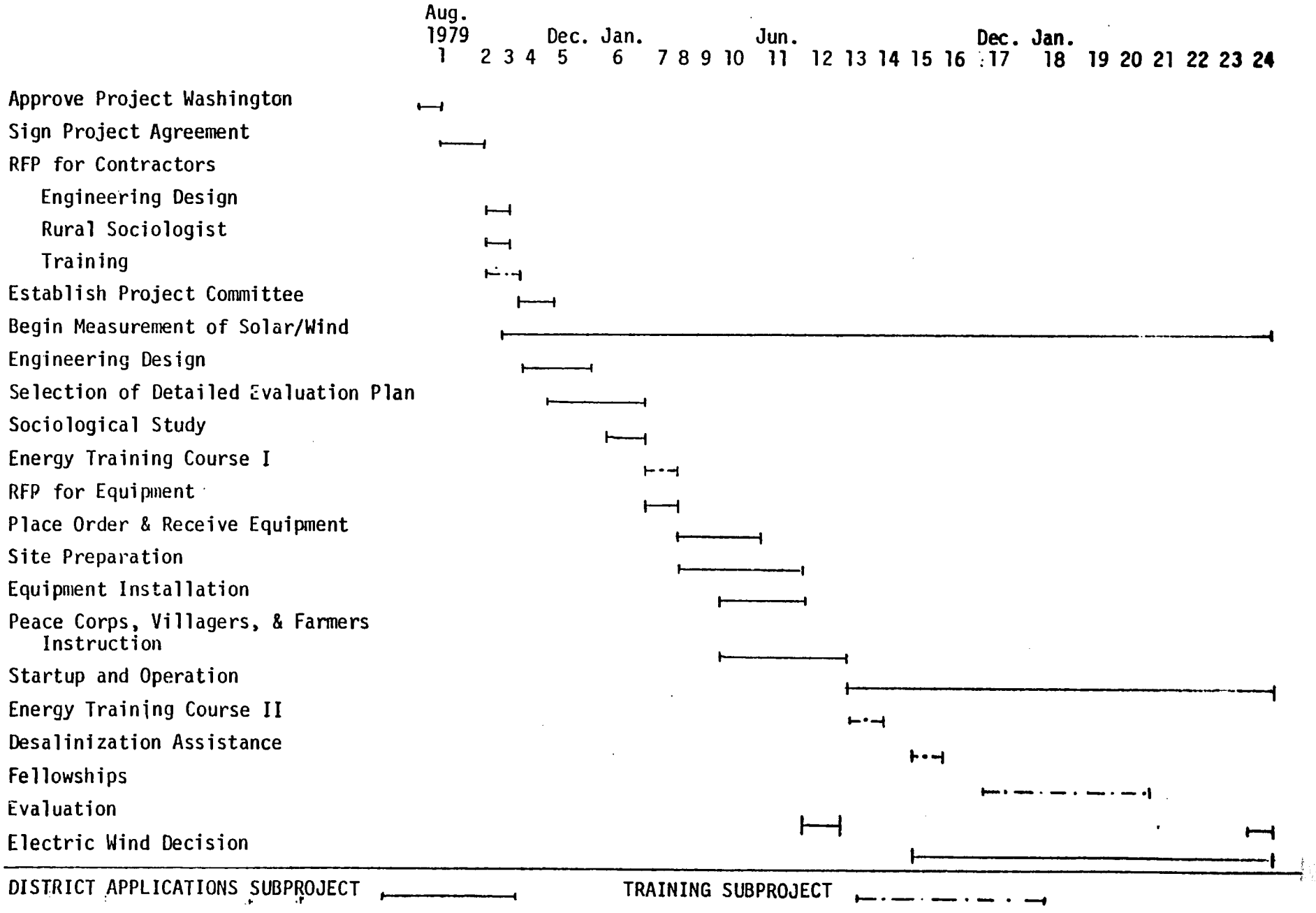

Figure I

PROJECT MANAGEMENT DIAGRAM

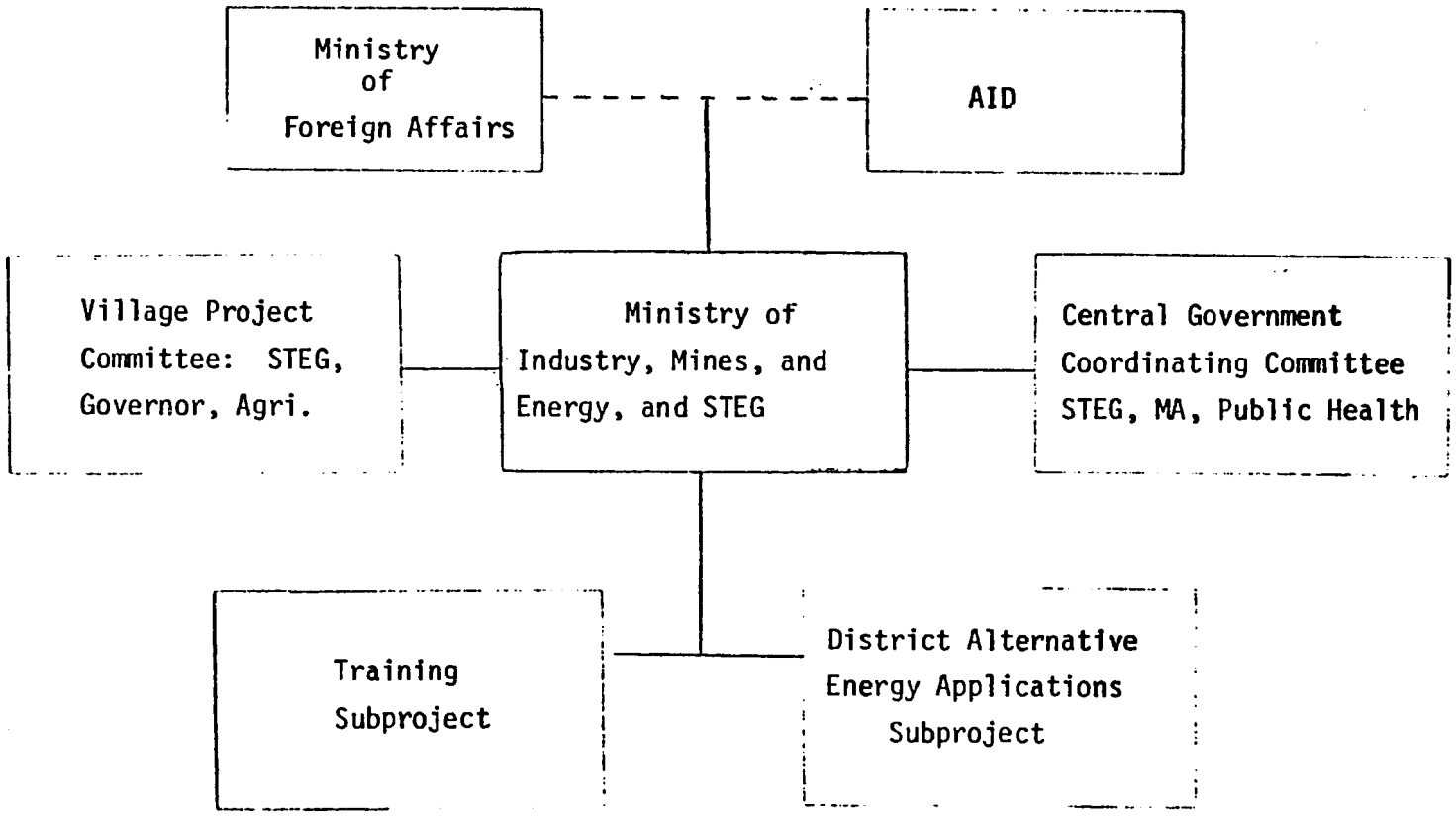

IV.

B. Financial Plan

1. Introduction

Table 1 shows project costs by project components and category of assistance (e.g., technical assistance, training, equipment). Table 2 shows project costs by project year.

Detailed financial plans for each sub-project are provided in Annex 5.

2. Foreign Exchange (Local Currency)

The summary tables do not break down costs into foreign exchange and local currency. Host country local currency costs are broken down in Annex 5. All AID funding is for foreign exchange costs except:

(a) local transportation by short-term consultants on public carriers.

(b) local subsistence (per diem) of short-term consultants. Although this item will be disbursed in dollars, it will be used by consultants to purchase local accomondations and food.

(c) Workshops and other. These will be local costs, mostly for rent of conference facilities, stenographic services, translation, duplication, etc., incidental to energy training programs conducted in Tunisia.

On the GOT side, all financing will be for local currency costs except for participant travel. This item will cost approximately $3000.

3. Contingency

The overall costs include $73,000 for contingencies This is necessary to take care of unexpected technical difficulties uncovered during design phase. This sum will also cover any change in schedule of training activities.

4. GOT costs and commitments

GOT costs are based on estimates provided by GOT officials. The costs include GOT contributions for construction and equipment, salaries, travel and per diem. Though discussed generally with GOT, these figures have not yet been approved by the GOT.

In a project such as this, it is difficult to capture fully all GOT costs over the entire project. The GOT costs shown reflect only additional costs which are directly attributable to new project activities. Additional GOT support for the project will be provided from existing and on-going budgets of various departments.

The GOT contribution will have to be confirmed by the GOT's regular annual budget review process. However, MIME, through STEG, has given a clear commitment to cover GOT costs in the project. The project is considered a high visibility project by STEG and, thus, there is reasonable certainty that the GOT will provide all required support to ensure the AID inputs are fully productive.

5. Reasonableness and firmness of costs

On the basis of the above analysis and discussions, USAID concludes tha the anticipatee costs of undertaking the project are reasonable, and that the financial planning for the project is adequate.

TABLE 1

Financial Plan
(US $ 000's)

	AID	GOT	PEACE CORPS	TOTAL
Sub-project 1 District Energy Applications				
1. Technical Assistance	190.0		93.3	283.3
2. Equipment	645.8	120.15	93.3	765.95
3. Administration		50.00		50.00
4. Contingency	73.27	12.5		85.77
Subtotal	909.07	182.65	93.3	1185.02
Sub-project 2 Energy Training				
1. Technical Assistance	60.93			60.930
2. Training	30.00	6.625		30.625
Subtotal	90.93	6.625		97.555
Total	1000.00	189.275	93.3	1282.575

TABLE 2

Financial Plan
By Category of Assistance by Year
(US $ '000's)

	PY 1	PY 2	PY 3
AID			
TA			
Consultants	169.58	81.35	
Training		30.00	
Equipment	645.80		
Contingency	58.62	14.65	
Subtotal	874.00	126.00	
Peace Corps			
TA	13.3	40.0	40.0
Subtotal	13.3	40.0	40.0
GOT			
Salaries	25	25	
Participant Travel		4	
Facilities and Construction	150.15		
Training	.75	5.875	
Subtotal	175.9	34.875	
Total	1063.2	200.875	

IV. C. Evaluation

The District solar applications subproject will be evaluated from the economic, social, technical and political viewpoints.

The economic evaluation will have to be based on increases in productivity and farm income, as measured from baseline data to be gathered during the design phase of the project. Because of the brief time which the Project paper design team was able to spend at the site, it was not possible to collect all the income and production figures needed, nor was it possible to select farms which would participate in the subproject. Once data are established, Ministry of Agriculture personnel will keep records of the levels of input (fertilizer, water, labor, etc.) and production of each of the crops. Market prices and costs associated with marketing will also be determined, so as to fix the increase in farm income associated with each technology's application on a farm.

Commercial uses will also need baseline data. This should be relatively easy to establish for food preservation and for machine repair. Of particular interest, will be employment creation opportunities which may arise from increased economic activity (including cottage industry), though this is not a specific objective of the subproject. Periodic visits to the site should be made by the project officer to collate the agricultural data and to gather the commercial data.

The social evaluation should measure periodically the impact of the new technologies on the village. For this purpose, a rural sociologist should visit the village, beginning with the period of introduction of the new energy sources, to conduct interviews with farmers, commercial persons, local officials and residents. It will be important to detect unfavorable aspects of the technology introduction, particularly since certain persons will enjoy economic and social benefits as a result of the project. It will also be useful to measure any increase in satisfaction of the inhabitants with their environment after electricity is brought to the village.

Of special interest will be the changes wrought by different consumption patterns imposed by the technological limitations of the new energy sources, as well as by limitations in its capacity. Sowing and harvesting patterns will have to be adjusted, and availability of electricity will be restricted to the storage capacity of the system (aspects of electrification which would not be the case if fossil fuel energy sources were used.)

The technical functioning and maintenance of the energy sources and distribution system (as well as associated equipment such as pumps) is of major importance, and should be evaluated every six months. Unanticipated problems doubtlessly will arise with respect to maintenance, spare parts, and malfunctions. Likewise, the reliability of the systems, i.e. their utility under site climatological and wind conditions and the demands for energy, must be included in the evaluation.

Finally, the reactions the policymakers in Tunis to the project must be sought as site-specific experience is gained. The Ministries of Energy and Agriculture will be in close touch with the project, as will the Central Tunisia Project managers. It is to be hoped that their reactions will be favorable, and that the subproject will provide much practical information on the problems and prospects of renewable energy in a rural development setting.

The results of the evaluations should be integrated into series of followup reports, for the benefit of Tunisian and United States Government officials.

USAID will work with STEG, Agriculture, ENIT and the people of the district on the development of a detailed evaluation plan in order that responsibility for individual data collection tasks is shared. As mentioned in the Implementation Plan, evaluation of this project is important not only for Tunisia, but also for other AID renewable energy projects world-wide. DS/EY will be requested to participate in annual evaluations so that their experience in other energy projects can be brought to bear on this project.

PROJECT CHECKLIST

Listed below are statutory criteria applicable generally to projects with FAA funds and project criteria applicable to individual fund sources: Development Assistance (with a subcategory for criteria applicable only to loans); and Economic Support Fund.

CROSS REFERENCES: IS COUNTRY CHECKLIST UP TO DATE? yes
HAS STANDARD ITEM CHECKLIST BEEN REVIEWED FOR THIS PRODUCT? yes

A. GENERAL CRITERIA FOR PROJECT

1. FY 79 App. Act Unnumbered: FAA Sec. 653 (b): Sec. 634A. (a) Describe how Committees on Appropriations of Senate and House have been or will be notified concerning the project; (b) is assistance within (Operational Year Budget) country or international organization allocation reported to Congress (or not more than $1 million over that figure)?	1. (a) Project was not included in AID's 1979 Congressional Presentation. Congressional notification for FY 1979 authorization will be necessary. (b) assistance is not within 1797 04B.
2. FAA Sec. 611(a) (1). Prior to obligation in excess of $100,000, will there be (a) engineering, financial, and other plans necessary to carry out the assistance and (b) a reasonably firm estimate of the cost to the U.S. of the assistance?	2. Yes, see PP Sections III and IV.
3. FAA Sec. 611(a) (2). If further legislative action is required within receipient country, what is basis for reasonable expectation that such action will be completed in time to permit orderly accomplishment of purpose of the assistance?	3. No further legislative action required.

A. 4. FAA Sec. 611(b); FY 79 App. Act Sect. 101. If for water or water-related land resource construction, has project met the standards and criteria as per the Principles and Standards for Planning Water and Related Land Resources dated October 25, 1973?

4. N/A

5. FAA Sec. 611(e). If project is capital assistance (e.g., construction), and all U.S. assistance for it will exceed $1 million, has Mission Director certified and Regional Assistant Administrator taken into consideration the country's capability effectively to maintain and utilize the project?

5. N/A

6. FAA Sec. 209. Is project susceptible of execution as part of regional or multilateral project? If so why is project not so executed? Information and conclusion whether assistance will encourage regional development programs.

6. No. The rest of the question therefore's not applicable.

7. FAA Sec. 601(a). Information and conclusions whether project will encourage efforts of the country to: (a) increase the flow of international trade; (b) foster private initiative and competition; (c) encourage development and use of cooperatives, credit unions, and savings and loan associations; (d) discourage monopolistic practices; (e) improve technical efficiency of industry, agriculture and commerce; and (f) strengthen free labor unions.

7. This is a demonstration activity; it will not affect international trade or strengthen free labor unions; it will support efforts to improve technical efficiency of industry, agriculture and commerce.

8. FAA Sec. 601(b). Information and conclusion on how project will encourage U.S. private trade and investment abroad and encourage private U.S. participation in foreign assistance programs (including use of private trade channels and the services of U.S. private enterprise).

8. Most of the offshore procurement financed under this project will come from the U.S.

9. FAA Sec. 612(b); Sec. 636(h). Describe steps taken to assure that, to the maximum extent possible, the country is contributing local currencies to meet the cost of contractual and other services, and foreign currencies owned by the U.S. are utilized to meet the cost of contractual and other services.

9. The cooperating country will contribute all local construction extension services, and electrical hook-ups.

A.

10. FAA Sec. 612(d). Does the U.S. own excess foreign currency of the country and, if so, what arrangements have been made for its release?

10. Tunisia is a near excess currency country. Determination for use of U.S. currency will be part of the authorization.

11. FAA Sec. 601 (e). Will the project utilize competitive selection procedures for the awarding of contracts, except where applicable procurement rules allow otherwise?

11. Yes.

12. FY 79 App. Act Sec. 608. If assistance is for the production of any commodity for export, is the commodity likely to be in surplus on world markets at the time the resulting productive capacity becomes operative, and is such assistance likely to cause substantial injury to U.S. producers of the same, similar, or competing commodity?

12. N/A

B. FUNDING CRITERIA FOR PROJECT

1. Development Assistance Project Criteria

a. FAA Sec. 102(b); 111; 113; 218a. Extent to which activity will (a) effectively involve the poor in development, by extending access to economy at local level, increasing labor-intensive production and the use of appropriate technology, spreading investment out from cities to small towns and rural areas, and insuring wide participation of the poor in the benefits of development on a sustained basis, using the appropriate U.S. institutions; (b) help develop cooperatives, especially by technical assistance, to assist rural and urban poor to help themselves toward better life, and otherwise encourage democratic private and local governmental institutions; (c) support the self-help efforts of developing countries; (d) promote the participation of women in the national economies of developing countries and the improvement of women's status; and (e) utilize and encourage regional cooperation by developing countries?

1. (a) The instutition-building component of the project will not involve directly or benefit the poor although it will contribute to increasing the availability of renewable energy in Tunisia; the rural technologies component will involve the rural poor in testing and adapting technologies in order to improve Tunisia's rural energy system and inhance Tunisia's prospects for rural development. (b) The project will contribut to the development of economic and social institutions and improve the health conditio of the target population. (c) This is essentially a self-help project involving Tunisian effort toward better use of renewable energy sources. (d) The technologies involved, if proven practical, will help the role of women through less labor requirement and improved sanitation and health conditions. (e) A successful renewable energy program should be emulated in the region.

.1.b.

b. FAA Sec. 103, 103A, 104, 105 106, 107. Is assistance being made available: (include only applicable paragraph which corresponds to source of funds used. If more than one fund source is used for project, include relevant paragraph for each fund source.)

1. (103) for agriculture, rural development or nutrition; if so, extent to which activity is specifically designed to increase productivity and income of rural poor; (103A) if for agricultural research, is full account taken of needs of small farmers; — 1. N/A

2. (104) for population planning under sec. 104(b) or health under sec. 104(c); if so, extent to which activity emphasizes low-cost, integrated delivery systems for health, nutrition and family planning for the poorest people, with particular attention to the needs of mothers and young children, using paramedical and auxiliary medical personnel, clinics and health posts, commercial distribution systems and other modes of community research; — 2. N/A

3. (105) for education, public administration, or human resources development; if so, extent to which activity strengthens nonformal education, makes formal education more relevant, especially for rural families and urban poor, or strengthens management capability of institutions enabling the poor to participate in development; — 3. N/A

4. (106) for technical assistance, energy, research, reconstruction, and selected development problems; if so, extent activity is: — 4. Yes.

(i) technical cooperation and development, especially with U.S. private and voluntary, or regional and international development, organizations; — 4. (i) No.

B.1.b.(4).

(ii) to help alleviate energy problems;	4. (ii) The project is directed to the better uses of renewable energy at the rural level.
(iii) research into, and evaluation of, economic development processes and techniques;	4. (iii) No.
(iv) reconstruction after natural or manmade disaster;	4. (iv) No.
(v) for special development problems, and to enable proper utilization of earlier U.S. infrastructure, etc., assistance;	4. (v) No.
(vi) for programs of urban development, especially small labor-intensive enterprises, marketing systems, and financial or other institutions to help urban poor participate in economic and social development.	4. (vi) No.
c. (107) is appropriate effort placed on use of appropriate technology?	c. Yes.
d. FAA Sec. 110(a). Will the recipient country provide at least 25% of the costs of the program, project, or activity with respect to which the assistance is to be furnished (or has the latter cost-sharing requirement been waived for a "relatively least-developed" country)?	d. No; recipient will provide all local construction, extension services and electrical hook-ups. Major cost of project is photovoltaic system.
e. FAA Sec. 110(b). Will grant capital assistance be disbursed for project over more than 3 years? If so, has justification satisfactory to the Congress been made, and efforts for other financing, or is the recipient country "relatively least developed"?	e. No.
f. FAA Sec. 281(b). Describe extent to which program recognizes the particular needs, desires, and capacities of the people of the country; utilizes the country's intellectual resources to encourage institutional development; and supports civil education and training in skills required for effective participation in governmental and political processes essential to self-government.	f. Insufficient renewable energy and the and the drain of increasing fossil fuel imports will place on the Tunisian economy are serious constraints to rural development. The demonstration activities financed by this project will be implemented by Ministry of Industry, Mines and Energy and other local institutions, such as the Government of Kasserine.

B.1.b.(4).

g. FAA Sec. 122(b). Does the activity give reasonable promise of contributing to the development of economic resources, or to the increase or productive capacities and self-sustaining economic growth? — g. Yes.

2. Development Assistance Project Criteria (Loans Only)

a. FAA Sec. 122(b). Information and conclusion on capacity of the country to repay the loan, including reasonableness of repayment prospects. — 2. (a) N/A

b. FAA Sec. 620(d). If assistance is for any productive enterprise which will compete in the U.S. with U.S. enterprise, is there an agreement by the recipient country to prevent export to the U.S. of more than 20% of the enterprise's annual production during the life of the loan? — 2. (b) N/A

3. Project Criteria Solely for Economic Support Fund

a. FAA Sec. 531(a). Will this assistance support promote economic or political stability? To the extent possible, does it reflect the policy directions of section 102? — 3. (a) N/A

b. FAA Sec. 533. Will assistance under this chapter be used for military, or paramilitary activities? — 3. (b) N/A

Request for Assistance

As AID Project No. 664-0300 Project Grant Agreement dated Nov. 23, 1977, and signed by the Directors of USAID/Tunisia, the Tunisian Minister of Foreign Affairs and the U.S. Ambassador to Tunisia, sub-project of phase I of the Science and Technology Development project includes assistance in the development of solar and wind energy (p. 5 Annex 1).

With the decision to postpone initiation of Phase II resulting from the project evaluation (dated June 8, 1979), a decision was made to procede with the development of separate renewable energy project. The GOT has verbally expressed its desire for activity in this area and is in agreement with energy activities as envisioned in the attached project paper. In addition, attached are two letters from the Ministry of Foreign Affairs dated June 28, 1979, in which the project's components are discussed and the village selected.

604 - 500

REPUBLIQUE TUNISIENNE
MINISTERE
DES
AFFAIRES ETRANGERES

N° 609640 (AB)

TUNIS, le 28 JUIN 1979

Received 7/2/79

Monsieur le Directeur,

J'ai l'honneur d'accuser reception de votre lettre du 13 Juin ayant pour objet : Proposition de projet sur l'Energies nouvelles renouvelables en Tunisie "ref : Projet Science et Technologie n°664.0300 sous projet n°6 Elaboration de la Phase II, pour vous communiquer la position du Gouvernement sur les questions posées dans votre lettre.

1) Je vous confirme le choix de KAMOUR qui remplace Hassi Frid comme site pour l'expérience sur les Energies Renouvelables.

2) J'approuve l'étude sociologique du village et je souhaite que Mme Ayed prenne contact avec Mr. Makhlouf Directeur de la Recherche Scientifique sitôt qu'elle aura tirée ses conclusion.

3) Le budget tunisien au titre de l'année 1980 prevoira la contribution tunisienne à ce projet. Le volume de cette contribution et sa ventilation seront fixées ultérieur.

4) C'est la S.T.E.G. qui sera chargée de l'exécution du projet et elle agira dans le cadre du Programme National de Recherche sur l'energie solaire.

Veuillez agréer, Monsieur le Directeur l'expression de mes hautes considérations.

ACTION
AD
PROJ
FER
CONT
FEP
FXA
RDA
FHI
TEC
CRD
EXTA
BUDO
PERS
ADMIN
CAR
F
RF

Robert W. Beckman
Directeur par intérim
Division U.S.A.I.D.

502426

14 JUIL. 1979

SAT

ENERGY

ZK/JCH 82/2

Monsieur le Directeur,

Me référant à ma lettre n° 609649 du 28 Juin 1979, j'ai l'honneur de vous faire connaître qu'il a été finalement décidé de retenir le site Hassi-Frid au lieu de Kamour pour la réalisation du projet sur les énergies renouvelables.

Ce choix se justifie par le nombre plus élevé de familles qui bénéficieraient de l'énergie solaire matière d'éclairage, de chauffage, de pompage etc...

De plus les travaux et études qui ont été déjà fait concernant ce village, permettraient une concrétisation plus rapide du projet.

Je vous prie d'agréer, Monsieur le Directeur, l'expression de ma parfaite considération.

Signé : Ismaïl Khelil Directeur général de la Coopération Internationale

Monsieur le Directeur de
la Mission Spéciale Américaine
149, Avenue de la Liberté
- TUNIS -

3.b

DEPARTMENT OF STATE

TELEGRAM

American Embassy Tunis

ACTION: AID -10
INFO: AMB, DCM,
ECON CHRON/14

UNCLASSIFIED

CONTROL NR:

Phase II

1400

DE RUEHC #2748/01 0390337
ZNR UUUUU ZZH
P 080322Z FEB 79
FM SECSTATE WASHDC
TO AMEMBASSY TUNIS PRIORITY 1001
BT
UNCLAS SECTION 01 OF 02 STATE 032748/01

AIDAC

8 FEB 79 07 30

E.O. 12065 N/A

TAGS.

SUBJECT: SCIENCE AND TECHNOLOGY PHASE II PID-NEAC APPROVAL

IN A NEAC MEETING ON JANUARY 30, THE PID ON SCIENCE AND TECHNOLOGY, PHASE II WAS APPROVED. IT WAS GENERALLY AGREED THAT SCIENCE AND TECHNOLOGY IS A HIGH PRIORITY FOR TUNISIA IN THE CONTEXT OF OUR PLANS THROUGH AND BEYOND 1981. BECAUSE OF THE TECHNICAL COMPLEXITY OF THE PROJECT, THE PP WILL BE APPROVED IN AID/W. THE NEAC ASKED THAT THE MISSION ADDRESS THE FOLLOWING POINTS IN PREPARING THE PROJECT PAPER.

ACTION	INFO
D	
AD	
PROG	
PER	
CONT	
FFP	
FXA	
RDA	
FPH	
TMG	
CRD	
EXT	
R UDO	
R/LEG	
DMIN	
CTR	
CF	
RE	

1. THE ISSUE OF U.S. PROJECT MANAGEMENT MUST BE ADDRESSED IN THE PP. IN ORDER TO AVOID HAVING TO MANAGE AS MANY AS SEVEN SUB-PROJECTS, THE MISSION IS ASKED TO EXPLORE IN ITS IMPLEMENTATION PLAN THE POSSIBILITY OF USING A SINGLE HOST COUNTRY CONTRACT. THE CONTRACTOR COULD BE GIVEN ALL BUT PASA IMPLEMENTATION RESPONSIBILITY IN BOTH THE U.S. AND TUNISIA
UNISIA

2. AS REQUIRED IN PID PREPARATION INSTRUCTIONS PER HANDBOOK 3, CHAPTER 4, C3, PP 4-5, THE MISSION IS REQUESTED TO SUBMIT BY CABLE FOR INCORPORATION INTO THE PID A MORE DETAILED PRELIMINARY BUDGET FOR THE PHASE II PROJECT, INCLUDING COST FINANCED IN FY79. WHILE PID HAS BEEN APPROVED IN PRINCIPLE, IT IS NOT CLEAR THAT COMPONENTS WILL COST OUT AT PROPOSED LEVELS, NOR THAT ALL PROPOSED SUB-PROJECTS CAN BE FUNDED. BECAUSE THE ONGOING PROJECTS HAVE BEEN LATE STARTING, AND BECAUSE THERE ARE NO FY80 FUNDS PROPOSED IN THE 1980 CP. FY181 IS THE PREFERRED DATE FOR FUNDING CONTINUATION OF SELECTED PHASE I PROJECTS. SINCE ONLY DOLS. 550,000 IS PRESENTLY RESERVED FOR PHASE II FUNDING IN FY79 THROUGH FY 80, AND BECAUSE THERE MAY BE ADDITIONAL MANAGEMENT CONTRACT COSTS, MISSION SHOULD PRIORITIZE SUB-PROJECT IMPLEMENTATION SCHEDULE FOR BOTH PROJECT STUDY AND IMPLEMENTATION PHASES. TOP PRIORITY SUB-PROJECTS MAY BE FULLY FUNDED TO EXTENT FUNDS BECOME AVAILABLE IN FY79 AND FY80.

3. THE PP SHOULD ADDRESS THE WAY IN WHICH THE MISSION ENVISAGES THAT PHASE II WILL SERVE AS A BRIDGE TO POST-AID RELATIONSHIPS, AND TO THE EXTENT POSSIBLE IDENTIFY THE CHANNELS THROUGH WHICH FUTURE SCIENTIFIC COOPERATION AND TECHNOLOGY TRANSFER BETWEEN THE U.S. AND TUNISIA MIGHT FLOW.

4. THE EVALUATION OF PHASE I ANTICIPATED IN THE ORIGINAL PP SHOULD BE CARRIED OUT AS PART OF PHASE II PP PREPARATION, PRINCIPALLY BY MISSION STAFF, WHICH SHOULD TAKE THE LEAD IN DESIGNING THAT EVALUATION. USAID IS REQUESTED TO SET FORTH ITS PRESENT IDEAS ON THAT DESIGN, E.G. WHAT FACTORS SHOULD BE COVERED, WHAT TIMING IS ENVISAGED, AND WHAT IF ANY HELP WILL BE REQUESTED. AS PART OF THE EVALUATION, CONSIDERATION SHOULD BE GIVEN TO THE EXTENT TO WHICH SCIENTIFIC AND TECHNOLOGICAL INFORMATION IS EXCHANGED WITHIN THE COUNTRY, AND TO WHAT EXTENT COORDINATION OF ACTIVITIES IS TAKING PLACE. THERE IS, HOWEVER, NO PRIOR ASSUMPTION THAT GREATER COORDINATION OF SCIENCE POLICY AT THE NATIONAL LEVEL IS DESIRABLE OR FEASIBLE AT THIS STAGE, SO THE EVALUATION SHOULD NOT FOCUS EXCESSIVELY ON THIS ISSUE.

5. SINCE THE GOT HAS NOT CONSTITUTED A COUNTERPART TUNISIAN TEAM AND DOES NOT APPEAR ANXIOUS TO HAVE A FOREIGN ADVISOR FOR THE SYSTEMS ANALYSIS/OPERATIONS RESEARCH (SA/OR) SUBPROJECT, THE MISSION SHOULD REVIEW STATUS AND FUTURE OF THIS ACTIVITY, INCLUDING POSSIBILITY OF REPROGRAMMING FUNDS IN PHASE I TO OTHER USES.

6. GIVEN THE PROJECT'S EMPHASIS ON SCIENTIFIC/TECHNOLOGICAL INTERCHANGE AS OPPOSED TO CAPITAL ASSISTANCE OR BUDGET SUPPORT, ANY PROPOSED CONTRIBUTIONS TO SUCH ITEMS AS SEWAGE STABILIZATION PLANTS (PER PAGE 6 OF THE PID) SHOULD BE DELETED IN PREPARING THE PP.

7. THE PRESENT STATUS OF THE REMOTE SENSING SUB-PROJECT AND FOLLOW-ON PHASE II ACTIVITIES SHOULD BE CLEARLY DEFINED WITH THE HELP OF THE USGS PASA GROUP. WE CONCUR THAT THE AMBITIOUS CARTOGRAPHIC TRAINING REQUEST FROM THE GOT SHOULD BE LOOKED AT WITHIN THE PERSPECTIVE OF REIMBURSABLE TECHNICAL ASSISTANCE, ALTHOUGH LIMITED ASPECTS OF THAT TRAINING MIGHT FIT IN WITH THE PHASE II REMOTE SENSING PROJECT PLANS. BELIEVE PROVISION OF MAP CONTEMPLATED BY MISSION WOULD MERIT LOWER PRIORITY CONSIDERATION.

8. PID DISCUSSES USE OF ARIZONA OR UTAH AS POTENTIAL MANAGERS OF DESERTIFICATION SUB-PROJECT. DID MISSION CONSIDER USE OF SMITHSONIAN, WHICH HAS A TEAM IN PLACE, RELATIONSHIPS ESTABLISHED, AND A GOOD RECORD TO DATE, OR WAS IT FELT THAT SMITHSONIAN EFFORTS MAY NOT BE SPECIFICALLY DEVELOPMENT ORIENTED? WOULD APPRECIATE HEARING STATUS OF CURRENT SMITHSONIAN PROJECT, INCLUDING WHAT RESEARCH NOW ENCOMPASSES, AS WELL AS A BRIEF DESCRIPTION OF WORK TO BE PROPOSED IN PP FOR PHASE II.

9. THE NEAC SUGGESTED THAT UNDER CRITERIA FOR SELECTION OF PHASE II SUBPROJECTS LISTED AS II A ON PAGE 3 OF THE PID

NO (3) "INFORMATION AND MANAGEMENT" BE CHANGED TO DATA COLLECTION AND MANAGEMENT AND THAT REMOTE SENSING BE TRANSFERRED TO THAT CATEGORY, SINCE IT HAS WIDER THAN PURELY ENVIRONMENTAL APPLICATIONS.

10. IN DEVELOPING AND IMPLEMENTING THE PROJECT, THE MISSION AND AID/W SHOULD BE ALERT TO AND AWARE OF RELATED OTHER-DONOR ACTIVITY AND INTERESTS.

11. THE MISSION IS REQUESTED TO SUBMIT A SCHEDULE OF EVENTS FOR THE PREPARATION OF THE PP, INCLUDING A TIMETABLE FOR THE ARRIVAL OF SPECIFIC TEAMS OR INDIVIDUAL EXPERTS, AN ESTIMATION OF THE KIND OF RESOURCES TO BE REQUESTED, WHEN AND FOR HOW LONG. PRIMARY RESPONSIBILITY FOR PP PREPARATION LIES WITH THE MISSION, BUT IT IS RECOGNIZED THAT LIMITED AID/W HELP MAY BE NEEDED TO WORK WITH MISSION STAFF IN PREPARING PORTIONS OF THE PACKAGE. THE PP SHOULD ALSO ADDRESS MISSION MANAGEMENT REQUIREMENTS FOR THE PROJECTS AND PRECISE PLANS FOR MEETING SAME WITH THE DEPARTURE OF W.W. WILLIAMS. VANCE
BT
#2748

Certification Pursuant to Section 611(e) of the Foreign Assistance Act of 1961, As Amended

I, Robert W. Beckman, Acting Director, the principal officer of the Agency for International Development in Tunisia, having taken into account, among other things the maintenance and utilization of projects in Tunisia previously financed or assisted by the United States, do hereby certify that in my judgment Tunisia has both the financial capability and the human resources capability to effectively install, maintain and utilize the technical assistance project which consists of (a) demonstration of alternative energy resource utilization in a rural Tunisian village and (b) training in alternative energy applications.

This judgment is based upon general considerations discussed in the project paper to which this certification is attached.

July 26, 1979

Robert W. Beckman
Acting Director

Certification Pursuant to Section 611(e) of the Foreign Assistance Act of 1961, As Amended

I, Robert W. Beckman, Acting Director, the principal officer of the Agency for International Development in Tunisia, having taken into account, among other things the maintenance and utilization of projects in Tunisia previously financed or assisted by the United States, do hereby certify that in my judgment Tunisia has both the financial capability and the human resources capability to effectively install, maintain and utilize the technical assistance project which consists of (a) demonstration of alternative energy resource utilization in a rural Tunisian village and (b) training in alternative energy applications.

This judgment is based upon general considerations discussed in the project paper to which this certification is attached.

July 26, 1979

Robert W. Beckman

Acting Director

DRAFT
GC-NE:BBryant:ew
8/10/79

PROJECT AUTHORIZATION
AND REQUEST FOR ALLOTMENT OF FUNDS

PART II

Name Of Country: Tunisia

Name of Project: Renewable Energy

Number of Project: 664-0325

Pursuant to Part I, Chapter 1, Section 106 of the Foreign Assistance Act of 1961, as amended, I hereby authorize a Grant to Tunisia (the "Cooperating Country") of not to exceed One Million United States Dollars ($1,000,000) (the "Authorized Amount") to help in financing certain foreign exchange and local currency costs of goods and services required for the project as described below (the "Project").

The project consists of two sub-projects, each of which is designed to promote the economic and social development of Tunisia. The sub-projects and the amount of funding authorized and approved for each are as follows:

Sub-Project	Authorized Amount	Amount Approved
District Energy Applications	$ 909,070	$ 909,070
Planning in Renewable Energy Applications	$ 90,930	$ 90,930

The entire amount of A.I.D. financing herein authorized will be obligated when the Project Agreement is executed.

I hereby authorize the negotiation and execution of the Project Agreement by the officer to whom such authority has been delegated in accordance with A.I.D. regulations and Delegations of Authority subject to

the following essential terms and covenants and major conditions; together with such other terms and conditions as A.I.D. may deem appropriate:

a. Source and Origin of Goods and Services

Goods and services financed by A.I.D. under the Grant shall have their source, origin and nationality in the Cooperating Country or in the United States except as A.I.D. may otherwise agree in writing.

b. Initial Conditions Precedent

Prior to the initial disbursement, or to the issuance of the initial commitment documents under the Project Agreement, the Cooperating Country, except as A.I.D. may otherwise agree in writing, shall furnish in form and substance satisfactory to A.I.D.;

1. Evidence that the Cooperating Country has provided sufficient funds in its budget to finance the first year investment, operating and maintenance costs of the project including staffing, physical facilities, vehicles and office equipment and Cooperating Coungry project costs.

2. A statement of the names of the persons holding or acting in the Office of the Cooperating Country and specimen signature of each person specified in such statement.

Prior to initial disbursement for technical assistance services a satisfactory executed contract must be negotiated.

c. Covenants

1. The Cooperating Country shall agree to provide any additional assistance, in-kind or budgetary for cost not foreseen during the design of the project but found to be necessary for the successful

completion of the project.

2. The Cooperating Country shall agree to participate in annual project evaluation and additional evaluation meeting with A.I.D. as necessary and as mutually agreed.

3. The Cooperating Country shall provide assurance to A.I.D. that adequate budgetary and staff support for all project years will be forthcoming.

_____

_____
Date

Initial Environmental Examination

Project Location	:	Tunisia
Project Title	:	Renewable Energy Demonstration
Funding	:	FY 79 - $400,000
Life of Project	:	$1,000,000
IEE Prepared By	:	Eric D.K. Melby AID/W - DS-EY

Date: 25 July 1979

Environmental Action Recommended: Negative Determination

Concurrence : Robert W. Beckman
Acting Mission Director

Date: 26 July 1979

Assistant Administrator's Decision:

Approved:_____

Disapproved:_____ Date:

Initial Environmental Examination

Project Location	:	Tunisia
Project Title	:	Renewable Energy Demonstration
Funding	:	FY 79 - $400,000
Life of Project	:	$1,000,000
IEE Prepared By	:	Eric D.K. Melby AID/W - DS-EY

Date: 25 July 1979

Environmental Action Recommended: Negative Determination

Concurrence : Robert W. Beckman
Acting Mission Director

Date: 26 July 1979

Assistant Administrator's Decision:

Approved:_____

Disapproved:_____ Date:

I. Examination of Nature, Scope and Magnitude of Environmental Impact

A. Description of Project

The project involves demonstrating a range of small scale solar, wind and agricultural technologies in a rural setting in Tunisia. The purpose of the project is to test the utility of renewable energy technologies in meeting development goals in Tunisia. The district of Hasse El Frid has been chosen as the site for these demonstrations. All of the demonstrations except the village electrification are small and will directly affect one or two families and occupy 5 hectares or less. The village electrification system will occupy several hundred meters of land and provide power to 600 people living and working in the village. These demonstrations should have few, if any, negative impacts on the environment. The potential impacts described in the following paragraphs are possible and, as can be readily seen, they are negligible. They can be further minimized with standard design and operation procedures.

1. If the panels break, do not work or are decommissioned and buried on site there could be a problem with some of the compounds which make up the solar cells. These compounds include silicon, gallium arsenide, cadmium sulfide which are toxic to humans if ingested. The spent sulfuric acid from batteries is also toxic. The disposal will involve only small amounts of materials; with proper disposal environmental risks will be minimized. A disposal plan for these materials will be developed during the engineering design phase of the project.

2. The largest installation, the village power plant, is capable of generating approximately 24,000 watts of electricity. This is equivalent to 167 amps at 120 volts. There is a potential for electric shock, especially in the plant. Because the amperage and voltage will be low, there is a minimum risk of electrocution This risk will be further minimized by proper plant design and signs in French and Arabic noting the danger.

3. The project could require the drilling of up to 13 shallow wells and the establishment of up to 20 hectares of newly irrigated agricultural lands. For the district size and acquifer, there was deemed to be an insignificant risk to the other water users. The Tunisian agricultural personnel agreed that potential affects on the elevation of the water table from this type of program were not significant.

4. The generation of electricity could produce localized interference to radio and television reception; however, this can be minimized and would be less than that produced by on site diesel generation of the same amount of power.

Annex 4

EFS

IMPACT IDENTIFICATION AND EVALUATION FORM

Impact Areas and Sub-areas 1/	Impact Identification and Evaluation 2/
A. LAND USE	
1. Changing the character of the land through:	
a. Increasing the population	L
b. Extracting natural resources	N
c. Land clearing	N
d. Changing soil character	N
2. Altering natural defenses	N
3. Foreclosing important uses	N
4. Jeopardizing man or his works	N
5. Other factors	
	NONE
B. WATER QUALITY	
1. Physical state of water	N
2. Chemical and biological states	N
3. Ecological balance	N
4. Other factors	
	NONE

1/ See Explanatory Notes for this form.

2/ Use the following symbols:
N - No environmental impact
L - Little environmental impact
M - Moderate environmental impact
H - High environmental impact
U - Unknown environmental impact

August 1976

C. ATMOSPHERIC

1. Air additives ---------- N
2. Air pollution ---------- N
3. Noise pollution ---------- N
4. Other factors

NONE

D. NATURAL RESOURCES

1. Diversion, altered use of water ---------- N
2. Irreversible, inefficient commitments ---------- N
3. Other factors

NONE

E. CULTURAL

1. Altering physical symbols ---------- N
2. Dilution of cultural traditions ---------- L
3. Other factors

NONE

F. SOCIOECONOMIC

1. Changes in economic/employment patterns ---------- L
2. Changes in population ---------- L
3. Changes in cultural patterns ---------- L
4. Other factors

NONE

IMPACT IDENTIFICATION AND EVALUATION FORM

G. HEALTH

1. Changing a natural environment _____ N

2. Eliminating an ecosystem element _____ N

3. Other factors

_____ _____

_____ _____

H. GENERAL

1. International impacts _____ N

2. Controversial impacts _____ L

3. Larger program impacts _____ N

4. Other factors

_____ NONE

_____ _____

I. OTHER POSSIBLE IMPACTS (not listed above)

_____ _____

_____ _____

_____ _____

Prepared by: Eric D.K. Melby
AID/W - DS/EY

Project Location: Tunisia

Project Title: Tunisia-Renewable Energy

See attached Discussion of Impacts.

Table 1

Major Assumptions for Cost Estimating

Item	Price FOB USA	References
1. Windmill - (farm type)	$3000	1: pg. 78, 81
Tower	$1200 (10 M)	1: pg. 79
Pump	$1000 (estimated)	1: pg. 69
Well & storage	---	*
2. Windmill - (electricity)	$3000/peak Kw**	2: pg. 6 - 12
Tower	$1000	Estimated
Alternator	$ 100/Kw	2: pg. 2-11
Battery	$ 50/Kwh	1: pg. 82
Well & storage	---	*
3. Solar Drip Irrigation -		
Photovoltaic	$10-12/peak watt	2 & 4
Plastic Pipe	33.3¢/meter	3
Variable Speed Pump	$1000	Estimated
Water Filter System	350 Dinars in Tunisia	Tunisian cost
Well & plants	---	*
4. Solar Electricity		
Photovoltaics	$10-12/peak watt	2 & 4
Pump	$1000	Estimated
Batteries	$50/Kwh	1: pg. 82
Alternator	$100/Kw	2
Well & storage	---	*
5. Greenhouse & Wind		
*** Windmill - farm type	$3000	1: pg. 78, 81
Pump	$1000	Estimated
Greenhouse		Estimated
Solar (air) collectors	$ 750	Estimated
Well & storage	---	*
6,7,8.		
Village Solar Photovoltaics	$10-12/peak watt	2 & 4
Batteries	$50/Kwh	
Alternator	$100/Kw	*
Distribution & metering	---	*
Water well & storage	---	*
Appliances etc.	$20,000 Total	Estimated

*To be provided by Tunisians as part of their projects.

**Assuming approximately 30% efficiency of the windmill at average site wind speed the cost would be $10,000 per kw of useful energy.

***If power source is in plate or if 4 and 5 are combined costs may change.

1. Policy Analysis Division, Brookhaven National Laboratory, Irrigation in Less Developed Countries, March 1977.
2. Arthur D. Little, Inc., Distributed Energy Systems, a report prepared for the U.S. Department of Energy, June 30, 1978.
3. See Table VI, Annex VI, for reference (Rain Bird).
4. NASA Technical Memorandum 79097 (revised) Photovoltaic Power Systems for Rural Areas of Developing Countries, May 1, 1979, Lewis Research Center, NASA, Cleveland, Ohio.

TABLE II

ESTIMATED MAJOR DISTRICT SUBPROJECT COSTS

AID AND USE PORTION

APPLICATION	ELEMENT	NUMBER	COST FOB USA	TOTALS
3.1 Two wind driven pumping systems for farms	Windmills	2	$6000	
	Towers	2	$2500	
	Pumps	2	$2000	
	Spare parts & tools	-	$2000	
	Miscellaneous components	-	$2000	
				$15000
3.2 Two wind driven electricity systems for farms	Windmills	2		
	Towers	2	$2000	
	Batteries	-	$1000	
	Alternators	2	$200	
	Pumps	2	$2000	
	Miscellaneous components	-	$2000	
	Spare parts & tools	-	$6000	
				$34000
3.3 Two solar powered drip irrigation systems for farms	Photovoltaic arrays	2	$9600	
	Pumps	2	$2000	
	Water filtration systems	2	$2000	
	Drip irrigation pipes	-	$3500	
	Miscellaneous components	-	$2000	
	Spare parts & tools	-	$6000	
				$25600

TABLE II (continued)

APPLICATION	ELEMENT	NUMBER	COST FOB USA	TOTALS
3.4 Four solar electric systems for farms	Photovoltaic array	4	$96000	
	Batteries	-	$4000	
	Pumps	4	$4000	
	Alternators	4	$800	
	Miscellaneous components	-	$4000	
	Spare parts & tools	-	$8000	
				$116000
3.5 Two greenhouse solar heating and wind powered systems	Greenhouses*	2	$20000	
	Windmill systems	2	$15000	
	Solar hot air systems	4	$3000	
	Miscellaneous components	-	$2000	
	Spare parts & tools	-	$3000	
				$43000
3.6a Solar derived electricity for public uses	Photovoltaic array	1	$48000	
	Batteries	-	$2000	
	Alternator	1	$4000	
	Miscellaneous components	-	$1000	
	Spare parts & tools	-	$4000	
				$51000
3.6b Solar derived electricity for commercial uses	Photovoltaic array	1	$52800	
	Batteries	-	$10000	
	Alternator	1	$1000	
	Miscellaneous components	-	$2000	
	Spare parts & tools	-	$6500	
				$72300

TABLE II (continued)

APPLICATION	ELEMENT	NUMBER	COST FOB USA	TOTALS
3.6c Solar derived electricity for homes	Photovoltaic array	1	$144000	
	Batteries	-	$10000	
	Alternator	1	$900	
	Miscellaneous components	-	$2000	
	Spare parts & tools	-	$9000	
				$165900
Total Project**	Contingency	-	-	$73270
Appliances, etc.		-	-	$20000
Transportation to project site	Packing and shipping to Tunis	-	-	$80000
Solar/wind/meteorological data recording	Measure & record meteorological data in Hasse El Frid	-	-	$15000
Detailed engineering design of project	-	-	-	$100000
Operation and maintenance	Cost for startup	-	-	$70000
Evaluation	Monitor and Sociologist			$20000
Total Subproject				$909070

*Assumes glass greenhouses. If plastic can be used the cost will be less.

**The contingency is included to allow for increases in costs, items not included and changes in or expansion of applications.

***This assumes U.S. technologists on site for two months during start-up and two additional months and trained Peace Corps volunteer (electronics) on site for two years. Peace Corps costs are not included.

****This station will be used to replace a temporary installation setup by the Tunisians to serve for the first six months of the project.

ANNEX 5 - FINANCIAL PLAN DETAILS

Village Applications

The costing of the District Energy Applications Subproject can be performed by two methods. The first method involves making a large number of assumptions concerning pricing, availability and standard sizing of commercially available units. These assumptions, wherever possible, are also factored into the application design so that the components of each technology are selected to be sensitive to costs and commercial availability. The major additional assumptions used in calculating the cost of each application this way are shown in Table I. Wherever possible the most current FOB factory price of an element was used. The table also contains one of the references which was used to collect base unit cost data for each major component of an application.

The unit cost data in Table I can then be used to estimate the total technology application cost. The pre-engineering application cost estimate by this method is summarized in Table II. The level of detail provided in Table II may be misleading. All estimates are rough and a more appropriate representation of the cost (based on the preliminary nature of the design) would be one cost for each application. However, because the estimate was developed by summing individual best estimates the summary table contains this level of detail. In addition to the technology costs for each application a contingency of approximately 10 percent has been included. This contingency will allow for cost increases, items not included and changes in the nature or expansions of one or more of the applications. The estimate of shipping costs is based on a gross weight and a 60 cents per pound surface and sea transport cost. This procedure produces an estimated

cost of U.S. $916,000. The Tunisian counterpart costs can be estimated using data from Tables IV, V, VIII, IX, X, XIII (Technical Annex Number ___) and information from various sections in Technical Annex 6. Table III contains the assumptions used in arriving at the couterpart fund requirements for this subproject. Table IV contains cost data and estimates for the Tunisian share of the project. The estimated Tunisian counterpart costs are 80,000 Dinars. This estimate includes salaries of government personnel, land costs, transportation or per diem costs.

Another method which can be used to check the above procedure is to use gross cost factors. One factor is NASA's System Cost Factor for Large Scale Photovoltaic Systems. In a recent publication NASA officials calculated a 1979 total system cost of $21 per peak Kw. The cost figure includes battery storage, power conversion and transm ission, engineering, installation, buildings and site preparation. For the village system of 20.9 peak kilowatt and using this factor the cost should be $428,000.

Data in Table II shows a total of $267,000 for the photovoltaics and battery storage. This figure does not include costs for contingencies, engineering, transportation, site preparation, distribution and metering. It is not fruitful to estimate what percentage of the contingencies, engineering etc. for the total project (as shown in Table II) is associated with only the village electrification. However, it is worthwhile to mention that major components are approximately 63% of the total costs, and this is in line with NASA's estimate for the balance of the system (essentially everything but the panels).

Training

The training will be performed mostly in Tunisia using United States personnel and consultants. The only out of Tunisia training involves short-term (4 month) visits to the United States. The cost estimates for training are presented in Table V. The total AID costs are $90,930 US and the Tunisian costs are $2,650 Dinars ($6,625 US).

TABLE III

MAJOR ASSUMPTIONS FOR ESTIMATING TUNISIAN COSTS

SEC-TION	ITEM	PRICE	REFERENCES
3.1	Water storage Well	50 Dinars/25 M^3 80 Dinars/M finished	1 2 Data project
3.2	Well Water Wiring and labor	80 Dinars/M finished 50 Dinars/26 M^3 50 Dinars/installation	2 1 1
3.3	Well Plants and fertilizer	80 Dinars/M finished 60 Dinars/hectare	2 3
3.4	Well Storage	80 Dinars/meter finished 50 Dinars/25 M^3	2 1
3.5	Well Water storage Heat storage	80 Dinars/meter finished 50 Dinars/25 M^3 60 Dinars labor and transport of rocks	2 1 Estimated
3.6	Well Distribution lines Power meters Fencing Concrete foundations/ pads Wiring to buildings Wiring inside buildings Motorcycle Shortwave radio Meteorological station	80/meter completed 700 Dinars/100 meters 30 Dinars each 6 Dinars/meter 2 Dinars/$meter^2$ 1 Dinar 1 Dinar/meter 200 Dinars 100 Dinars 6000 Dinars	2 1 1 1 1 1 1 1 1 Estimated

1 Data and estimates supplied by STEG personnel

2 Data taken from AID documents including Small Holder Irrigation Development Project paper

3 Data supplied by the Ministry of Agriculture

TABLE IV

ESTIMATED MAXIMUM MAJOR DISTRICT SUBPROJECT COSTS

TUNISIAN PORTION*

SECTION	APPLICATION	ELEMENTS	COST AT SITE IN DINARS	TOTALS IN DINARS
3.1	Two wind driven pumping systems for farms	2 wells 20 meters deep 2 storage tanks 25 M^3	3,200 100	3,300
3.2	Two wind driven electricity systems for farms	2 wells 20 meters deep 2 storage tanks 25 M^3 Wiring and labor	3,200 100 100	3,400
3.3	Two solar powered drip irrigation systems	2 wells 20 meters deep Plants and fertilizer for 6 hectare	3,200 300	3,500
3.4	Four solar electric systems for farms	4 wells 20 meters deep 4 storage tanks 25 M^3	6,400 200	6,600
3.5	Two greenhouse installations	2 wells 20 meters deep 2 storage tanks 25 M^3 Rock heat storage	3,200 100 60	3,360
3.6	Village solar photovoltaic system	Well 20 meters deep 2500 meter power distribution lines 100 power meters 600 meters of fencing 500 M^2 pads & concrete 1000 meters wiring to buildings 500 meters wiring inside building Motorcycle and short-wave radio	1,600 17,500 3,000 3,000 1,000 1,000 500 300	27,900
	Meteorological station Contingency Project administration (salaries, benefits, overhead) 10,000/yr			6,000 6,000 20,000
	TOTAL			80,000

* It is possible that not all the wells included in the above estimate will be necessary.

TABLE V

ESTIMATE OF US COSTS FOR TRAINING

A. In Tunisia Training

1) Renewable Energy and Energy Policy

Course preparation		
2 persons x 10 days @ $400/day	$ 8,000	
Course presentation	5,600	
2 persons x 7 days @ $400/day		
Maintenance, 14 days @ $70	980	
		$14,580

2) Renewable Energy Technologies and Applications

Course and materials preparation		
3 persons x 15 days @ $400/day	$13,500	
On-site management		
1 person x 20 days @ $310/day	6,000	
Travel time, 4 person-days @ $400/day	1,600	
Course teaching and field work		
2 persons x 10 days @ $400/day	8,000	
Report writing		
1 person x 2 days @ $400/day	800	
Maintenance, 40 days @ $70/day	2,800	
		$32,200

3) Desalinization

1 person x 5 days @ $400/day	$ 2,000	
Travel time, 2 person-days @ $400/day	800	
Maintenance, 5 days @ $70/day	350	
		$ 3,150

4) Miscellaneous Costs (rental or projectors, printing, etc.)

	$ 5,000	
		$ 5,000

TABLE V (continued)

5) International Transportation			
6 round trips U.S.-Tunisia @ $1,000	6,000		
		6,000	
TOTAL OVERSEAS TRAINING		$ 60,930	
B. In-United States Training			
3 Fellowships x 4 months @ $2,500/month	30,000		
		$30,000	
TOTAL TRAINING			$90,930

TABLE VI

ESTIMATED GOT COSTS FOR TRAINING SUBPROJECT

Activity	Element	Cost (TD)
1. Senior Energy Seminar	Per diem for 15 participants	$ 300
2. Renewable Energy Technologies and Applications Course	Per diem for 25 participants (2 days)	$1,000
3. U.S. Based Training	Travel for 3 participants	$1,350
		$2,650

Compared to the alternative of diesel generation, the solar powered electricity generation system proposed in this project is preferable. It is much quieter, produces no pollutants during operation, is smaller in size and less unsightly.
The electricity and other source of power produced by the project will improve the quantity of life at the project site, increase productivity and improve health care and educational opportunities.

II. Recommendation for Environmental Action

A. Negative Determination is recommended

Detailed Technical Annex

I. Summary:

The objective of subproject 1 is to demonstrate the ability of solar and wind technology to perform work and supply the minimum services necessary in a village and in rural agricultural settings. Table I shows the number and types of solar and wind technologies selected for application in Hassi El Frid. (See Figure 1 for general village layouts). The subproject will have components located in various parts of the district study area. Exact sites for some of the applications and thus detailed design criteria can only be selected during the design phase of the project. However, it is possible at this time to stipulate the nature and size of each application and to estimate performance and costs. The technology descriptions are presented in the order which was established in the section on site description and the general order presented in Table I.

II. Introduction

Eight separate types of technology applications have been selected and, in some cases, more than one installation is planned. Viewed as a whole, it would seem to be efficient and cost-effective to combine some of the demonstrations into single components, i.e. plan one centrally located solar collector and storage center for the village public, commercial and residential applications. However, the purpose of the subproject is to demonstrate and collect data on various applications in rural settings and not just a total system. Therefore, in the village some way should be devised to separately monitor and, if necessary, control electricity demand in the residential, commercial and public sectors. At the time of the detailed project engineering design the specific mechanisms to accomplish this will be made part of the system. At this time it is assumed that there can be one set of panels and one set of batteries for all of the sectors. There will, however, be a separate line from the storage system to each sector. It will thus be possible by metering these three lines to know the instantaneous and cumulative demand and, if desirable, to control the supply of electricity to a given sector. This latter procedure may be necessary if the storage batteries become discharged.

Much of the solar and wind data necessary to design the agricultural and village demonstration is useful for more than one application and is thus summarized and presented prior to the description of the applications. Figure 2 is a presentation of solar radiation data by month at Kairouan, the closest

FIGURE 8

GENERAL LOCATION MAP* OF VILLAGE OF HASSI EL FRID

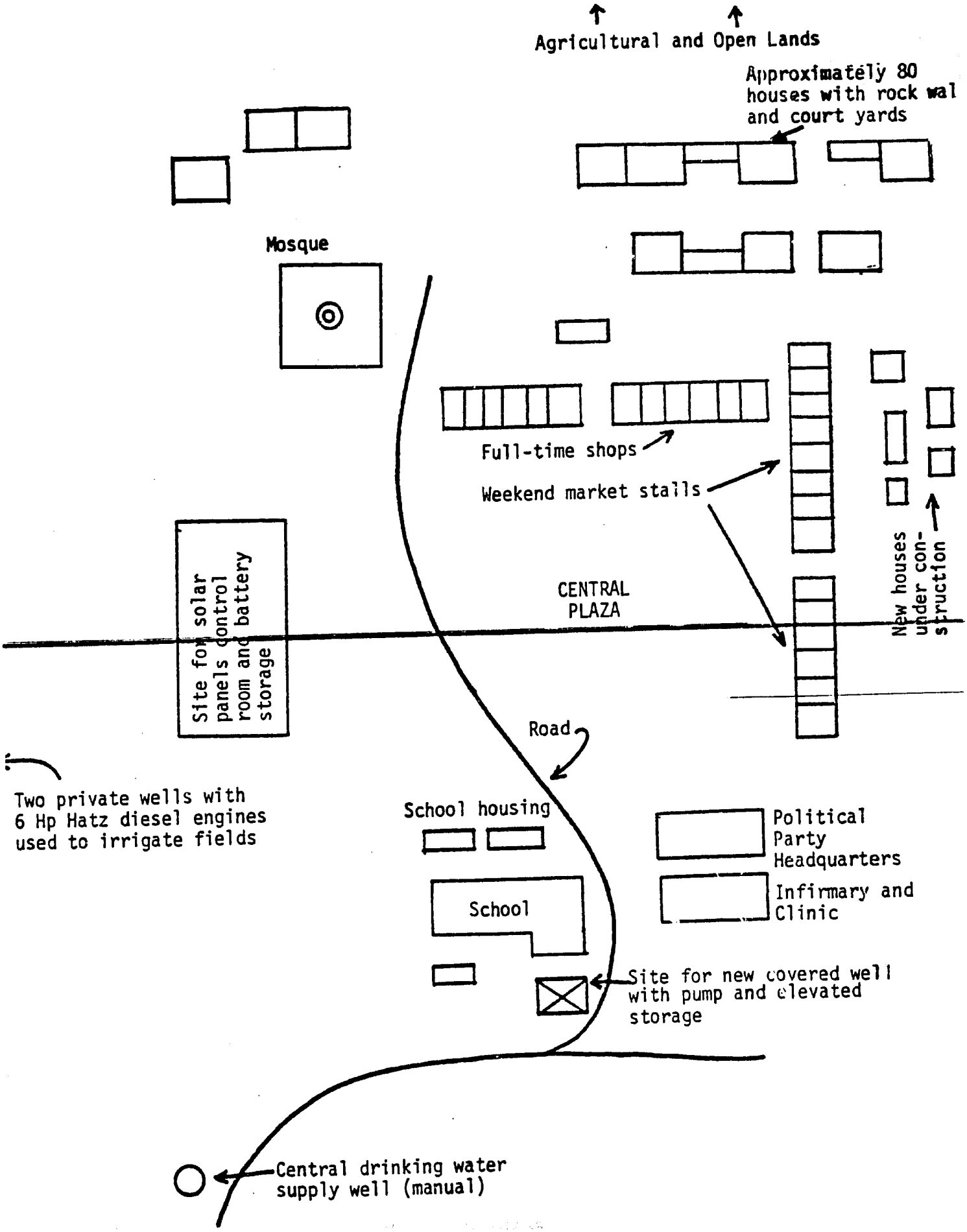

Figure 2

1977 Solar Energy Measured at Kairouan in Langleys

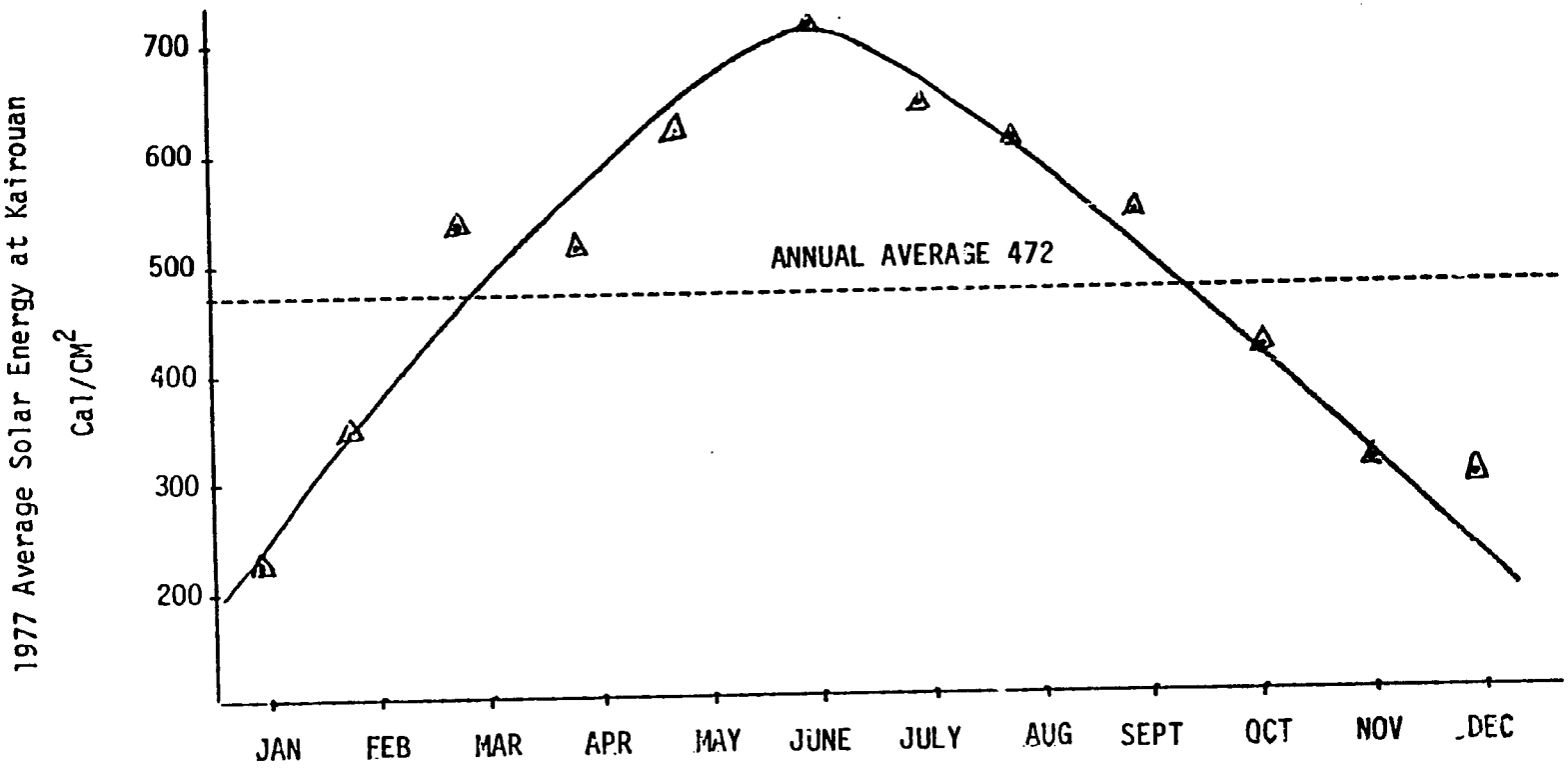

Source: Bulletin Mensuel du Centre Regional de Rayonnement Sidi Bou Saidj Service de la Meteorologie Nationale Tunisie

Table II

Solar Radiation at Kairouan*

Month	Solar Radiation	
	Gram Cal/CM^2/day	KWH/M^2/day
Average	472	5.5
June	698	8.1
January	225	2.6

* The insolation value for Kairouan is 3150 hours per year which is approximately 8.6 hours of sunlight per day.

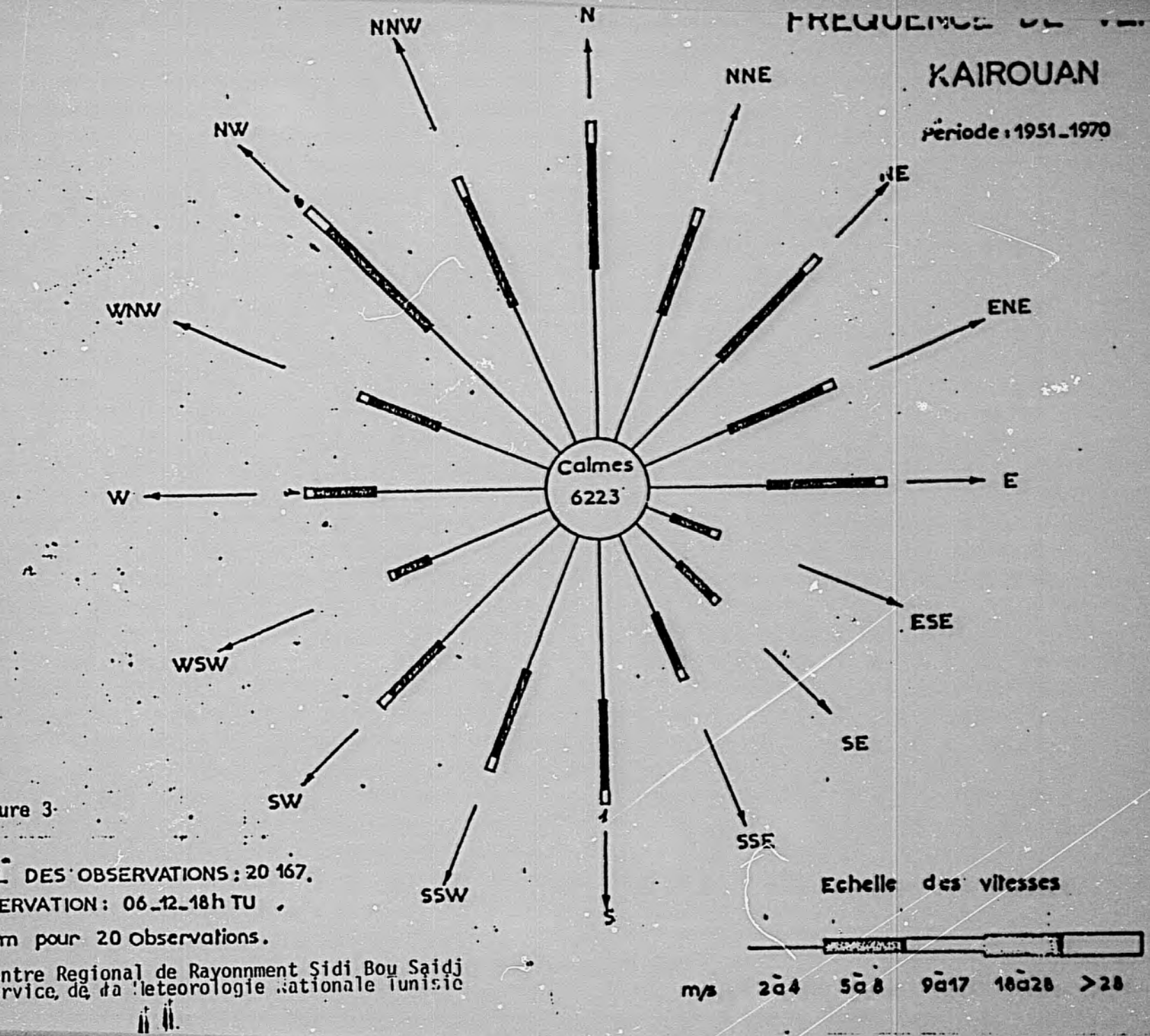

Figure 3

NOMBRE TOTAL DES OBSERVATIONS : 20 167.

HEURES D'OBSERVATION : 06_12_18h TU

ECHELLE : 1mm pour 20 observations.

Référence: Centre Regional de Rayonnment Sidi Bou Saidj
Service de la Meteorologie Nationale Tunisie

meteorological station. Table II summarizes this data as design criteria. Figure 3 presents a wind rose for Kairouan. The continuous meteorological station at Kairouan was chosen to represent the weather at Hassi El Frid on advice from Tunisian meteorologists. Specific data pertinent for only one application is presented in the section on that system.

III. Technical Details

The sizing of each of the eight technology systems was decided by using information on the minimum amount of energy required for a given task, the average size of farm or home, the priorities established in village and region, the cost and reliability of various technologies, etc. Thus, the sizing is only preliminary and will be adjusted or verified during the engineering design phase of the project. For this reason, for example, the four solar derived electricity applications, number four in Table I, could be changed to three or two larger sized demonstrations. It is also possible that the commercial demonstration, number 7 in Table I, could be adjusted to provide electricity to more shops of the same type or to different types. If this course is followed, the sizing of the system could be increased. Additional costs, availability of local equipment and improved meteorological data could also dictate changes in the applications during the design phase.

The selection of the district Hassi El Frid as a site for the demonstration was made using the following general criteria developed ~~out~~ by AID and the Ministry of Industry Mines and Energy:

- Area must not be scheduled for electrification for at least 5 years
- Area should be in or near AID's Central Tunisia project area
- Area should have a mix of residential, commercial, public and agricultural activities
- Water, and access to it should not be limited
- People in the area should be interested in participating in the demonstration
- Area should be rural but accessible to government services, larger city and outside markets.

Several sites in the Central Tunisia Project area were considered and finally the Governor of the Governorate of Kasserine, the head of the Central Tunisia Project, the Chef du Cabinet of the Ministry(MIME) and the Director of the AID Mission agreed upon Hassi El Frid.

The following applications were designed in conjunction with GOT personnel to meet the objectives and purposes of the project. However, during the design and early phases of the project it is likely that some changes will be agreed upon in terms of number of demonstrations, location and type or function of technology. Therefore the following should be viewed as descriptions of highly likely numbers and types of applications

III.1. Technical Details of a Wind Driven Mechanical Well Pumping System for Forage and Wheat Irrigation

The efficiency of wind driven mechanical pumping of water for supplemental irrigation is defined by the micrometeorology of the site in which the wind machine is located, the pumping head and the characteristics of the water demand. For example, obstructions within 150 meters of a wind tower can dramatically affect the wind regime and alter the output of a wind powered pump. The minimum (rule of thumb) requirement for successful application of a wind driven (mechanical) pump is an average wind speed of greater than 3 meters/second (optimally greater than 5 meters/second). Pumping heads (dynamic) should also be less than 15 meters. If these minimum conditions are met at a site and the water demand is not too great (less than 50 liters/minute), mechanical wind driven irrigation is simple and feasible. For the above-described conditions, multibladed farm or aeromotor type wind machines mounted on 10-meter towers can provide sufficient mechanical energy to meet grain and forage crop supplemental irrigation needs in the project area (see Table III). Figure 3 shows the wind regime at the closest and most similar Tunisian meteorological station (Kairouan). The project site is approximately 10 km further inland from the coast and 60 km further south than Kairouan, but climatic and geological conditions are similar. Using tabulated data for 20,167 instantaneous observations (20 years) of velocity and direction at Kairouan taken at 6 a.m., 12 noon, and 6 p.m. the numerical average of all wind speed recordings was found to be 2.6 meters/second. This calculated average is undoubtedly low because it does not include evening and night measurements. Night winds are common in this semi-arid region and thus the actual average wind velocity should be significantly higher. A data collection effort has been initiated in this region by the National Meteorological Service and at the

Table III

Traditional Supplemental Irrigation Water Requirements
for
Various Crops Grown in Central Tunisia
(Average M^3/Month/Hectare)

Month	CROP		
	Fruit Trees	Tomatoes*	Grain
January	-	-	300
February	400	-	300
March	400	300	600
April	500	400	600
May	300	900	-
June	-	1,200	-
July	-	1,500	-
August	-	1,300	-
September	500	1,000	600
October	-	400	400
November	-	-	400
December	-	-	-
TOTAL	2,100	7,000	3,200

Reference: Tunisian Ministry of Agriculture Data and a Report titled, "La Culture de la Tomate", published by La Division de la Vulgarisation ed du Recyclage, Ministry of Agriculture.

* An average for vegetables and truck gardening

time of project design much better site specific wind data will be available. Actual sizing of windmills is a function of the velocity cubed and not the average wind speed, However, for ease of understanding average wind speed is displayed and discussed.

Under the conditions described above, a multibladed farm type wind machine on a 10-meter tower with 3 to 4 meter diameter blades could be expected to supply up to 1 liter/second or 43 m3 of water per day when pumping for at least 12 hours. Based on the maximum amount of supplemental water needed for grain shown in Table III (600 m3) and assuming a pumping rate of 1 liter/second and 12 hours/day of pumping, it would take 14 days operation to supply the water necessary for 1 hectare of grain. By adjusting the planting pattern and phasing the planting of grain, the water need for a farm could be spread out. In this way, a wind powered pump sized as above could possibly supply water for two hectares of grain. Because all the design assumptions have been very conservative it is anticipated that the wind system shown in Figure 4 could serve at least 2 hectares of land. For this subproject, two installations of the type described in Figure 4 will be provided near the village.

The specific components of this project and the party responsible for their provision is shown in Table IV. The exact details of the applications will be worked out during the design phase of the project.

III. 2. Technical Details of Wind Derived Electricity Generation Systems for Well Pumping and Farm Electrification

The preceding section on wind driven mechanical pumping contains a general description of the wind regimes, groundwater conditions and general design assumptions for wind machine based systems. Table V is a summary of these data and also includes information about the wind/electricity systems. Annex 9 contains additional data on wells and groundwater in the Hassi El Frid district.

Preliminary indications are that both of the applications of wind driven electrification should be a 2 or 3 bladed horizontal windmills (modern in contrast to the farm type specified for the direct drive pumping). The final decision as to whether to use the more efficient modern type windmills can be made during the

Figure 4

Schematic Representation of Major Components of the Wind Driven Mechanical Well Pumping System for Forage and Wheat Irrigation

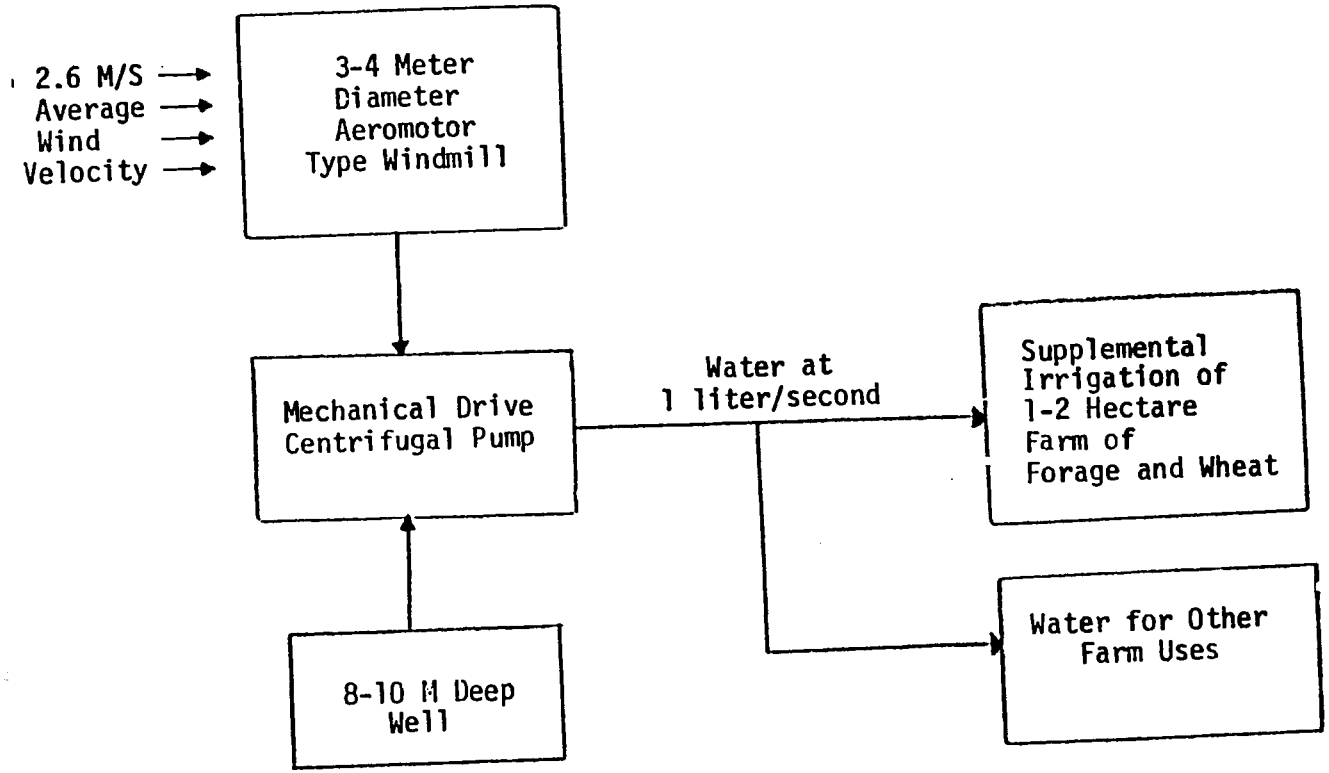

TABLE IV

MAJOR COMPONENTS OF WIND DRIVEN MECHANICAL WELL PUMPING SYSTEM

ITEM	NUMBER	DESCRIPTION	ENTITY SUPPLYING ITEM
Windmill & Tower*	2	3-4 meter diameter, aero-motor type with 10m. steel tower	AID
Water Storage	2	$25m^3$ above ground storage tank	GOT
Well	2	1m diameter hand dug concrete lined well	GOT/Farmer
Pump	2	1 l./sec Mechanical drive centrifugal pump	AID
Installation & Start-up System	-	General erection, labor under supervision of U.S. contractor	GOT

*It is assumed that tools and spare parts are included in this item.

Table V

Summary of Site Specific Design Criteria *
and Description of Major System Components *

ITEM	VALUE	REMARKS
Average Wind velocity	2.6 M/Sec	12 Hour average not including night winds which will increase average
Total system pumping head	$\leq$ 12 M	---
Electricity Uses	Lighting - 150 watts - 4 hrs Communication - 70 watts - 4 hrs Irrigation - 0.4 hp/hectare or 11 M^3 per two hectares	Alternating current
Pump type and size	1 hp centrifugal	---
Wind machine type and size	3 blade 3-4 meter diameter 1000 watt capacity	This is the largest size practical. Possibly a aeromotor type will be necessary
Battery and Alternator	20 Kwh battery storage and 1 KW alternator	Enough storage for approximately five days

* Both demonstration sites will use design criteria and system components described in this table.

project design phase when better wind data is available. A system designed to supply 1 kw of electricity under optimum wind conditions will provide sufficient power to irrigate at least 2 hectares for wheat and during the months when supplemental irrigation is not necessary (see Table III), lighting, communication, entertainment and heating needs can be supplied. Figure 5 is a schematic representation of the proposed system. In addition to the equipment and other components shown in Table V which will be supplied by AID for each of the two applications the GOT or farmer will provide the following:

- Two hand dug, concrete lined, 1 meter diameter wells
- Two 25 m3 above ground storage tanks
- Wiring to house from batteries and wiring inside the houses
- Labor to install the systems

Because the technology for deriving electricity from the wind is both newer and more expensive than that for wind driven mechanical pumping and because it requires higher average wind velocities, the implementation of this application is scheduled for the second year of the project. During the first year wind velocity - duration data will be collected in Hassi El Frid and this will be used to calculate an appropriate mix of generation capacity (windmill size) and storage capacity (amount of battery storage).

III. 3. Technical Details for a Photovoltaic Powered Drip Irrigation System for Fruit Tree Irrigation in the Project Area

The proposed irrigation system combining photovoltaic powered pumping and low evaporation irrigation (drip irrigation--see Figure 6) assumes that the rate of water application to fruit or nut frees is regulated, among other things, by the rate of evapotranspiration of the tree. For similar sized trees (same age and approximate leaf and root areas) this rate would be determined in large measure by the solar energy received by the trees. The power output of a photovoltaic system is also regulated by the amount of solar energy received. Thus, the theory for this application indicates that when solar radiation changes an appropriately designed photovoltaic powered pumping system will change the supply of water to trees in direct proportion to water need. This system in theory is expected to require the minimum

Figure 5

Schematic Representation of Major Components of the Wind Powered Electrification System

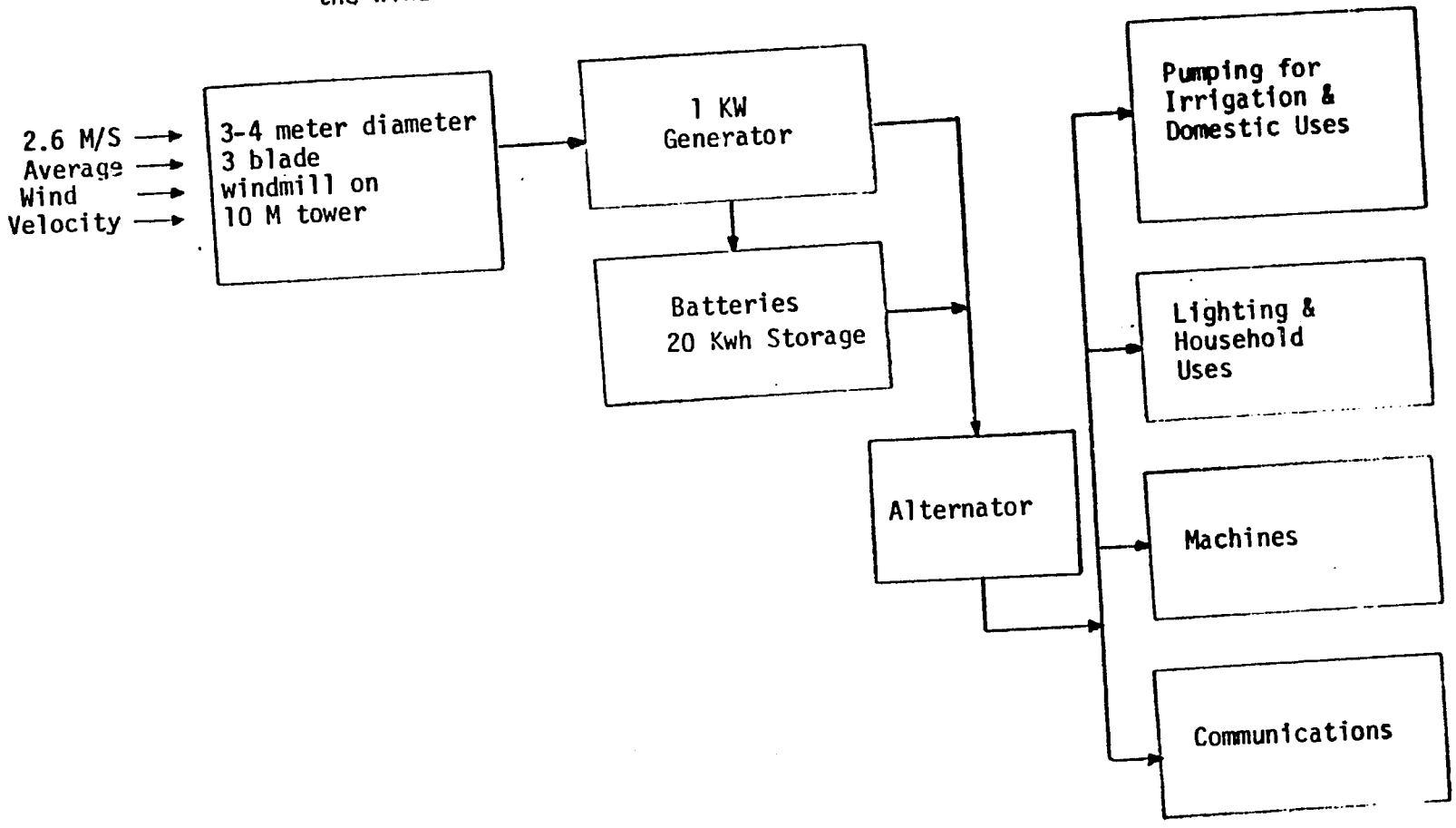

Figure 6

Schematic Representation of Major Components of the Photovoltaic Powered Drip Irrigation System

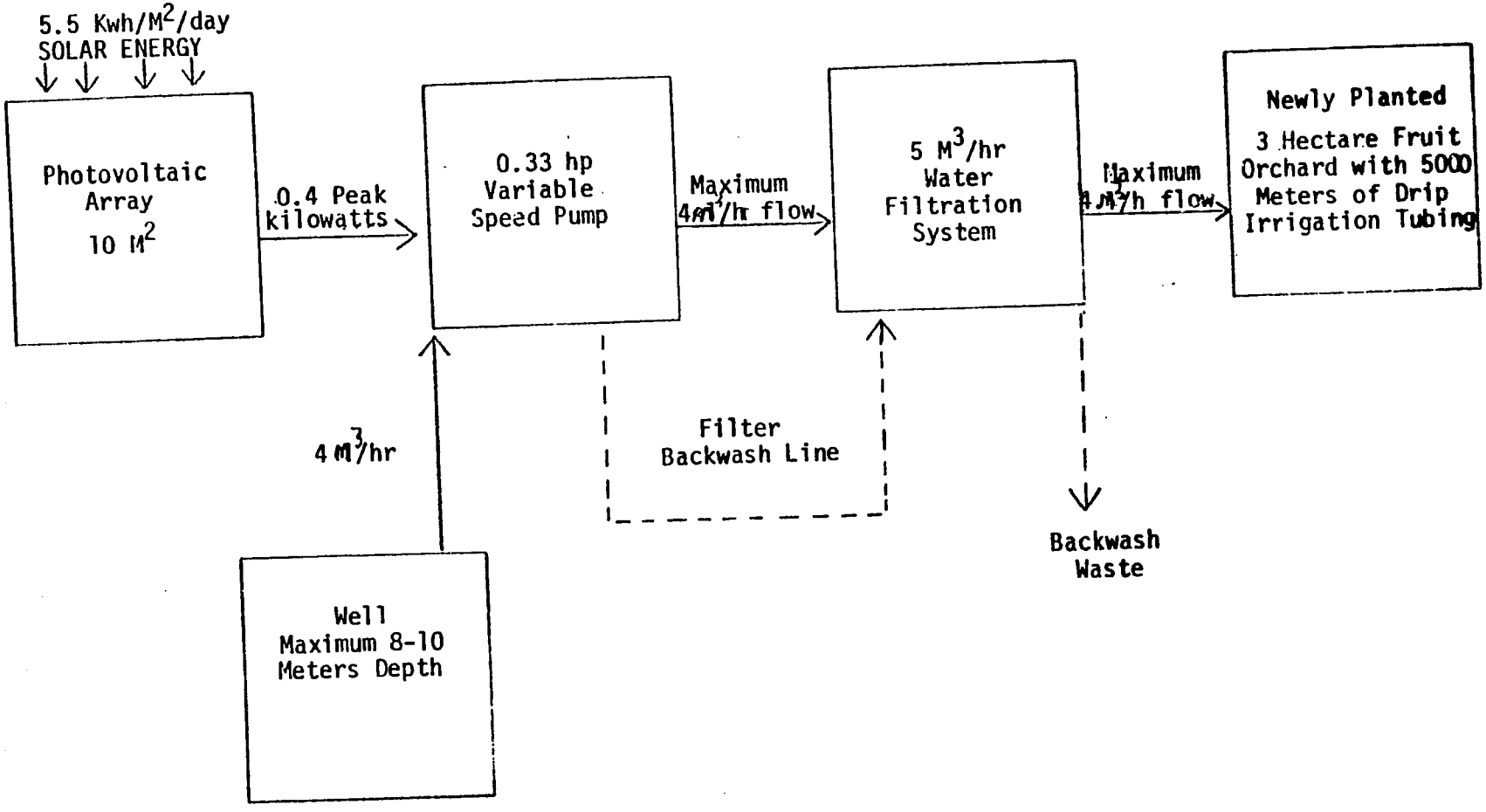

amount of irrigation water for proper fruit tree irrigation. Drip irrigation is especially efficient for newly planted and young fruit trees with small root systems. For mature trees with extensive root coverage spray irrigation is cost-competitive. Table VI shows data comparing the efficiency of several types of irrigation systems for young fruit trees.

The two photovoltaic powered drip irrigation systems (PPDI) to be demonstrated are to serve three hectare orchards of newly planted fruit trees. This is typical of the size of orchard expected to be developed in the central Tunisia project area. Data in Table III shows traditional water use by month for irrigation of various crops. This shows that for 1 hectare the maximum requirement for supplemental irrigation would be 500 M3 in April for fruit trees. It is expected that the PPDI system will actually require only 33 to 50 percent as much irrigation as conventional irrigation (see Table VI); however, the instantaneous rate of application at any one time may be equivalent to that for traditional irrigation. Therefore, a pump capable of supplying the average daily water needs for traditional irrigation has been specified. The maximum pumping rate for a three hectare fruit tree orchard is calculated as approximately 4 M3/hour.

The maximum expected depth of water to be pumped in the project area is between eight and 10 meters below ground level and the additional system head including a filtration system is assumed at a maximum to be 3 meters. The system designed for 12 M head and 4 M3/hour flow will require a 0.33 hp variable speed pump and 0.4 peak kilowatts of energy to run the pump. Using the data in Figure 6 and Table VI at a maximum a solar array of approximately 10 M2 will serve for the system. The system will not include battery regulation or storage. The fluctuation of power caused by variations in solar energy will simulate the changes in evapotranspiration and the variable speed pump will supply water as needed. Thus, not only is there no need for battery storage but providing it would contrav the purpose of the demonstration. Additionally, the system will require water filtration to prevent plugging of the holes by insoluble solids (sand particles) in the plastic drip irrigation pipe through which water is delivered to the fruit trees. Table VII contains data describing the preliminary layout of the fruit tree orchard.

The above system is in fact a micro-irrigation application requiring at most 0.33 hp per 3 hectare orchard. Figure 6 summarizes the PPDI system showing size and function of the major components.

Table VI*

A Comparison of Theoretical Efficiency of Various Irrigation Systems

SYSTEM	EXPECTED WATER USE FACTOR FOR NEWLY PLANTED FRUIT TREES
Well managed drip irrigation system	1.0**
Average drip irrigation system	1.2
Well managed sprinkler system	1.3
Well managed traditional ditch irrigation	1.5
Average sprinkler system	1.8
Average traditional ditch irrigation	2.9

* Data developed from information supplied in personal communications with Mr. H. Gary Underhill, Vice President of Rain Bird, Glendora, California (Rain Bird is a US company manufacturing and selling drip and sprinkler irrigation systems).

** The factors listed indicate approximately how much water would be required with various irrigation systems, thus traditional irrigation will require approximately 2.9 times as much as well managed drip irrigation.

Table VII

Drip Irrigation System Layout Per Hectare

Plot Dimensions (Meters)	Tree Spacing	Tubing (Meters)
100 by 100	16 - 100 meter rows with 25 trees per row	1600

This type of system is also expected to be applicable to vegetables planted in the normal growing season and to winter vegetables grown in greenhouses. The technical components of the PPDI system include a first-year start of an orchard irrigation demonstration. The demonstration should run for at least three years. Table VIII shows the principal components of the two photovoltaic powered drip irrigation demonstrations.

Table VIII

Major components to be supplied as a part of the Photovoltaic powered drip irrigation demonstrations.*

ITEM	NUMBER	DESCRIPTION	SUPPLIER
Well	2	Hand dug, concret lined, covered, 1 meter diameter	GOT or Farmer
Photovoltaic, Pump Tubing water filter	2	0.4 per kw array 5M3/hour water filtration 0.33 hp pump 5000 M drip irrigation tubing	AID
Plants, Fertilizer and Labor	-	Young fruit trees (seedlings) for two-3 hectares farms	GOT or Farmer

It is assumed that the GOT will also provide agricultural advice and that possibly a Peace Corps volunteer with agricultural experience will be working full time in Hassi El Frid.

III. 4. Technical Details of a Solar Photovoltaic Electrification System for Four Farms in the Study Area

The electricity uses and general design criteria developed for the wind electrification systems (see Table V) also apply to these photovoltaic applications. Additionally the solar energy data in Table II and in Figure 2 can be used to design the solar-photovoltaic

electrification application in the study area.

The water pumping needs for this application include growing vegetables and grain on four two to three-hectare farms. As was indicated in the introduction, the selection of system numbers and sizes was based on preliminary data and it is expected that during the detailed engineering phase of the project these choices can be verified or changed. For this application it is possible that two systems rather than the four currently suggested will be selected and designed. If this is the case the planned photovoltaic capacity not used could be switched to another application.

In this application the number of demonstrations is not as important as the conditions under which demonstrations are executed. If costs for photovoltaics continue to decrease and costs for fuel and traditional rural electrification continue to grow and if the demonstrations are successful discrete small scale power systems could become an important tool in Tunisia's program to nhance life in rural agricultural areas. These farm demonstrations of photovoltaics are, therefore a very important part of the subproject. The number of IF's above indicate that answers to many important questions can be gained from this application.

From Table III the maximum expected supplemental water demand for a three-hectare farm with two hectares of grain and one hectare of vegetables would be 2400 M3 in the month of September. This can be supplied if the planting of grain in September is staggered such that the second hectare is planted 15 to 20 days after the first. With this crop pattern a 1 hp pump would be required to supply the water and approximately 1.4 kw of electrical capacity. Additionally 500 watts should be provided for other uses similar to those stipulated in the wind powered electrical system. The major system components are approximately 30 M2 of photovoltaic collector (2 peak kw), 20 kwh of battery storage and an alternator. Figure 7 is a schematic representation of the system. Table IX shows the major components of the systems to be supplied by AID and by GOT or private sources.

Table IX

Major components of the farm photovoltaic electrification systems

ITEM	NUMBER	DESCRIPTION	SUPPLIER
Wells	4	Hand dug, concrete lined well with capacity to supply max of 110 M3 per 24 hour period.	

Photovoltaic panels, battery storage, pumps and power conditioning systems	4	2 peak kw capacity 20 kwh battery storage alternator-voltage regulator 1 hp cen	AID
Storage tank for water	4	25 50 M3	GOT or Farmer

III. 5. Technical Details of a System Comprised of a Greenhouse With Supplemental Nightime Heating by a Solar Hot Air System and Irrigation by Wind Powered Pumping

The system to be applied in two sites in the study area includes a green house for increased summer yield and to permit winter vegetable cultivation using active solar hot air heating and heat storage. The heat storage will be provided through an underground excavation full of rocks to retain heat absorbed during the day and through thermal convection to provide heat to the greenhouse at night. For this winter greenhouse application data concerning size of greenhouse, minimum expected ambient temperature in the study area (0°C), heat transfer coefficient through greenhouse covering (very likely the 180 micron plastic available in Tunisia), maximum wind velocity, minimum crop damage temperature (for tomatoes this is 4°C), and minimum expected solar radiation per 5 day period would be required.

The preliminary design includes a 7 M wide x 21 M long x 3 M high greenhouse constructed of metal and wood framing and 180 micron plastic covering. It may be necessary to use glass for the greenhouse covering; however, a preliminary evaluation of the available wind velocity data indicates that winds over 17 M/sec are very rare.* Additionally, greenhouse cultivation is practiced on the coast of Tunisia in a wind regime which is felt to be similar to that in the project area and the coastal greenhouses are constructed using 180 micro plastic. If the location of the two greenhouses to be tested in the study area is carefully selected to shelter them from direct wind impact, plastic covering should withstand wind forces. There is also a possibility of hail damage; however, it is expected that the frequency of damaging hail in Hassi El Frid in no greater than on the coast where plastic covered greenhouse are now in use. Specifics as to sizing, location covering material and layout will be decided during the design phase of the project.

---

* This conclusion was arrived at by reviewing general wind velocity and meteorological data for a number of meteorological stations managed by the Tunisian National Meteorological Service.

Figure 7

Schematic Representation of Major Components of Photovoltaic Electrification for Farms

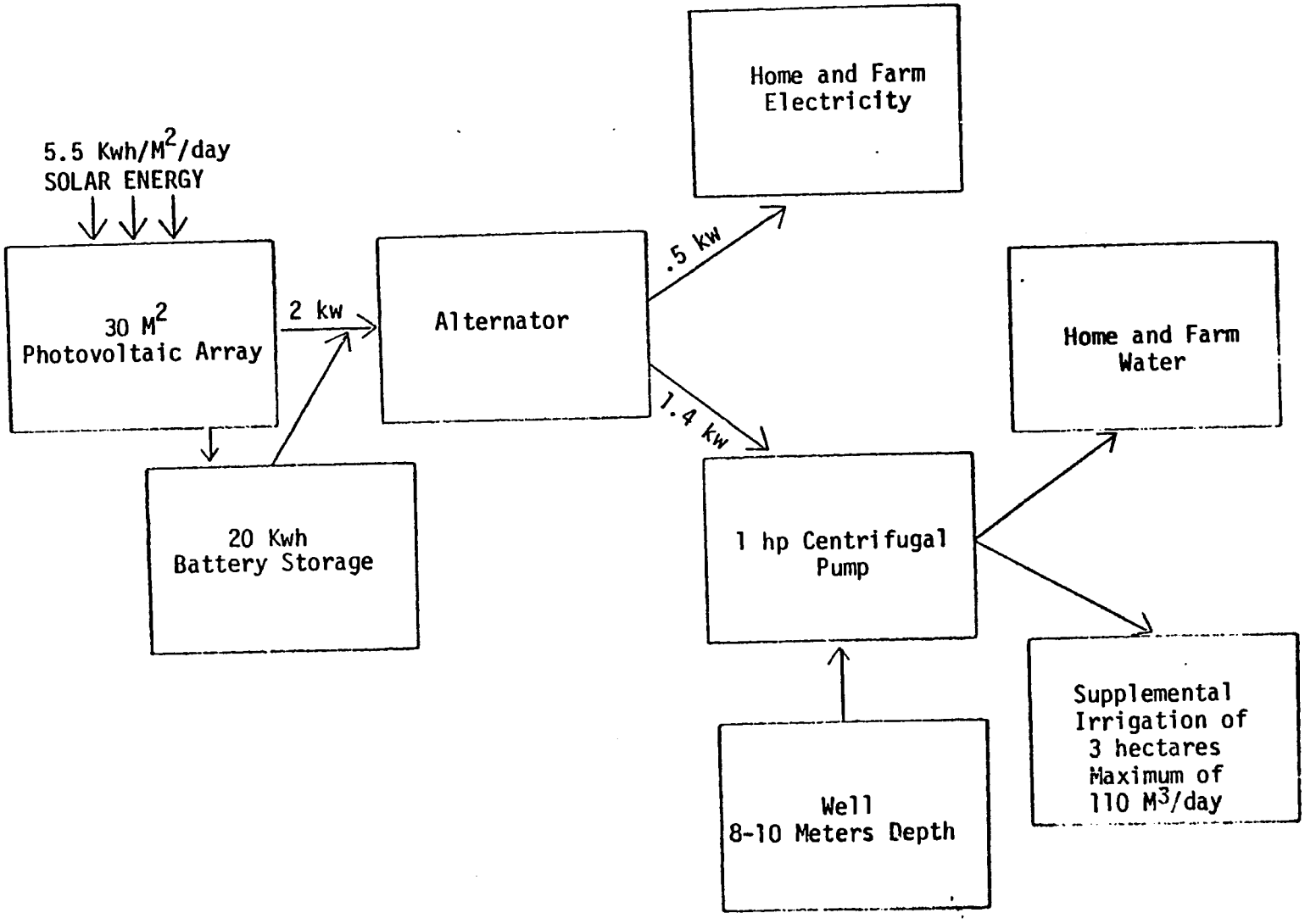

The systems will be located in an area where the solar radiation averages 472 cal/cm2/day (see Figure 2). Irrigation water requirements for this winter vegetable project are conservatively figured as 10 percent of the requirements for 1 hectare of vegetables in the summer or(using Table III) approximately 150 M3/month. For this project a drip irrigation system of similar size to the fruit orchard system could be used. However, because the farm will have other crops during the summer a year-round water demand will need to be satisfied. For this reason either a wind driven mechanical pumping system similar to that designed in Subproject 1 will be provided, two of the photovoltaic pumping systems from the previous application can be used, sites already having diesel driven pumps of the appropriate capacity will be selected or some combination of the above will be selected. Details of typical installation are found in Figure 5.

A solar thermal hot air collector and heat storage system will also be required to warm the greenhouse during those periods at night when the ambient temperature drops below 4°C. This system will include solar hot air panels and an underground stone-filled heat storage sink. The project assumes a first year start and the demonstration running for at least three additional years. The final engineering design and materials selection process is scheduled to be completed during the first phase of the project. Figure 8 is a schematic representation of the major project component. Table X contains details of the major components to be supplied for these demonstrations.

Table X

Major Components of the greenhouse demonstrations

ITEM	NUMBER	DESCRIPTION	SUPPLIER
Wells	2	Existing or hand dug, concrete lined with capacity to supply maximum of 1 l/sec.	GOT or Farmer
Water Storage	2	25 M3 above ground tank	GOT
Power Supply	2	Windmills or photovoltaic with possibility of using existing diesel	GOT and AID
Greenhouse	2	147 M2 plastic covered greenhouse	AID
Solar hot air collector and heat storage		Wood frame-plastic covered collectors & stone filled heat reservoir	AID and GOT

Figure 8

Schematic Representation of Major Components of System Containing Wind Powered Irrigation and a Greenhouse for Winter Vegetable Cultivation with Supplemental Nighttime Heating by a Solar Hot Air System *

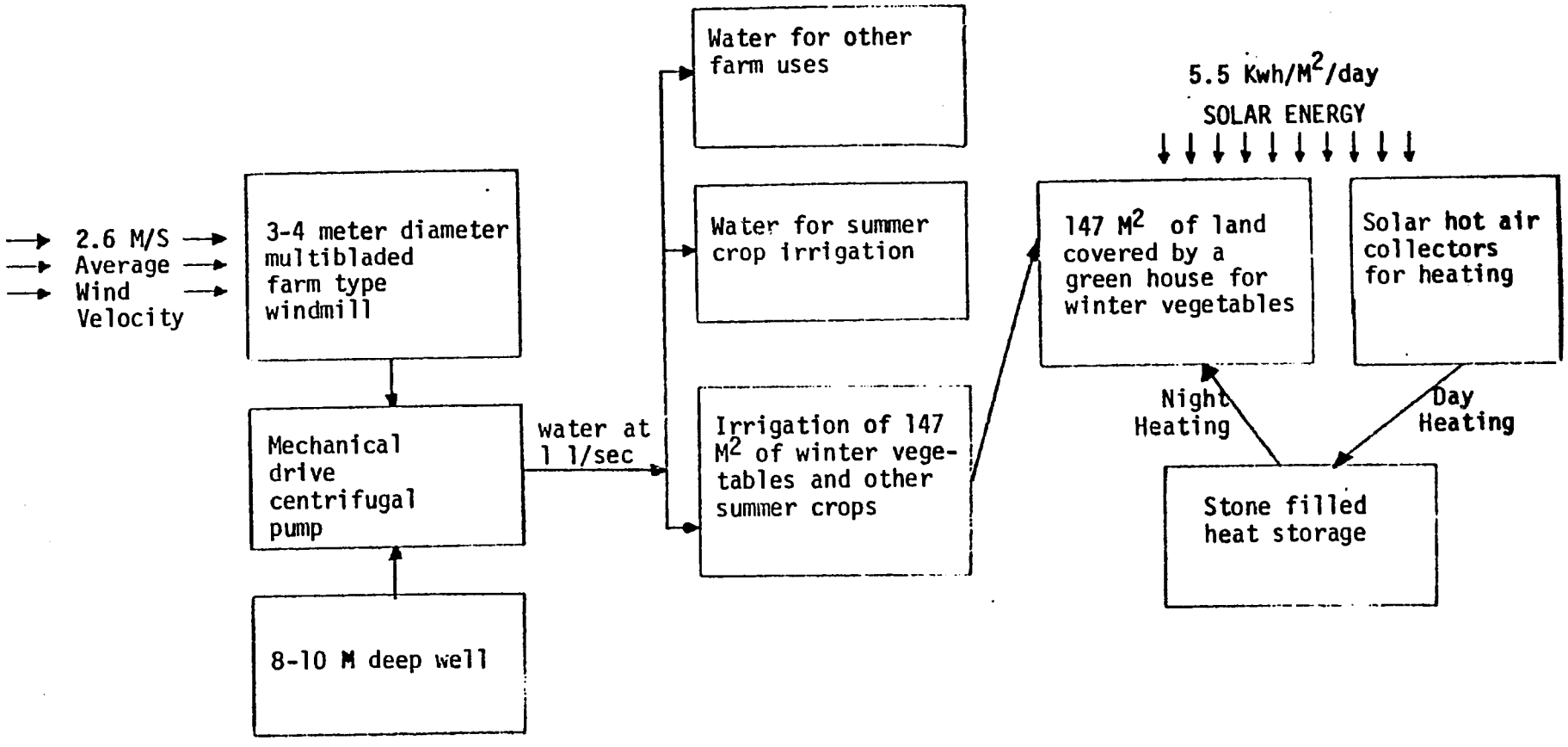

* Possibly some existing diesel-driven pump or a previously described PV pumping system can be adapted to provide power.

III. 6. Solar Powered Electrification in the Village of Hassi El Frid

The village of Hassi El Frid and surrounding area described elsewhere is shown in Figure 1. The village has 3 principal sectors or components: (1) The centrally located public buildings such as the school, infirmary and political party headquarters, (2) the market and commercial area and (3) the residential area. In terms of the objectives of the subproject, it is important to assess the suitability of photovoltaic power for each sector as well as for the total village. Thus, the needs of each sector are assessed separately in the following sections of this annex. A system is also sized for each sector but it is antipicated that the subproject as finally designed will have one integrated set of panel and batteries to supply electricity for the village. The separation for evaluation purposes can be achieved by adopting one of the following mechanisms:

- Dedication of a portion of the battery storage solely to the separate sectors
- Adoption of generation, storage or load management procedures which are different for each sector
- Monitoring of the supply and demand from each sector
- Differential control of the type and length of use of electricity in the sectors

During the detailed phase of this subproject inal decisions concerning the size of the photovoltaic array and the balance between array size and battery storage will be made. At this time the social anthropologist will also work with the villagers and the design team to more accurately estimate the desire to use and ability to pay for electricity. With this latter information a better estimate of initial peak demand and daily system load will also be possible. The major components supplied for each sector are summarized in Table XIII found at the end of this Section.

III. 6.A. Technical Details of a Solar Photovoltaic Electricity System for Priority Public Uses

This part of the subproject is designed to provide electricity to public building and to a new well. The electricity will be used for lighting, refrigeration, recreation and education (TV and Radio), a public address system, water pumping and possibly for limited space and water heating and cooking. Space and water heating may also be supplied by solar thermal devices.

The existing public well is located approximately 400 meters from the residential and commercial area of the village and has neither a mechnical nor a manually operated pump. Because water is drawn

by bucket from the open well for animals, human drinking and other uses, obtaining water is a slow and difficult process providing many opportunities for contamination. Because of this and the potential for pumping water to a centrally located storage tank the following has been suggested:

- Dig a new covered well near the school and closer to the infirmary and the central market place

- Provide an electrically driven 0.5 hp pump and a 2 meter elevated storage tank (30 M3 capacity)

- Connect a gravity water supply line from the elevated tank to the infirmary hot water tank and sink

- Allow the old public well to remain as a backup.

The school required lighting for classrooms and a kitchen/eating area, heating for cooking and electricity for a radio and television. The school presently has 200 children enrolled with 100 being served a noon meal. Butane gas is now used to heat a soup or hot drink (especially during the winter months). It is likely that electric hot plate heating will not be an appropriate substitute for this gas. However, this decision can be made during the final design of the system. The infirmary requires lighting and space heating for the examination room/laboratory (winter), hot water, refrigeration and some mechanical tools. It is assumed that space heating for the infirmary will be provided by a solar hot air system similar to the one specified for the greenhouse. If this technology is selected over electric heating during the design phase, the costing will be adjusted downward somewhat. Hot water heating will require an underground gravity pipe from the newly located elevated storage tank (new well near the school, see Figure 1). The hot water heater can be a small, open system with flat plate solar thermal panel heating, can be electrically heated or both. Unless the water supply solar hot water system required is found to be too complicated during the design phase, this method will be selected. The party headquarters could use lighting and electricity for a radio and television. Both could serve a central community need for communications and entertainment. The mosque now under construction will also need electricity for lighting and possible for a sound system. Table XI summarizes the estimated needs and power requirements for a system serving each of the priority public needs.

Figure 9

Schematic Representation of Major Components of
Photovoltaic Electrification for Priority Public Uses in Village

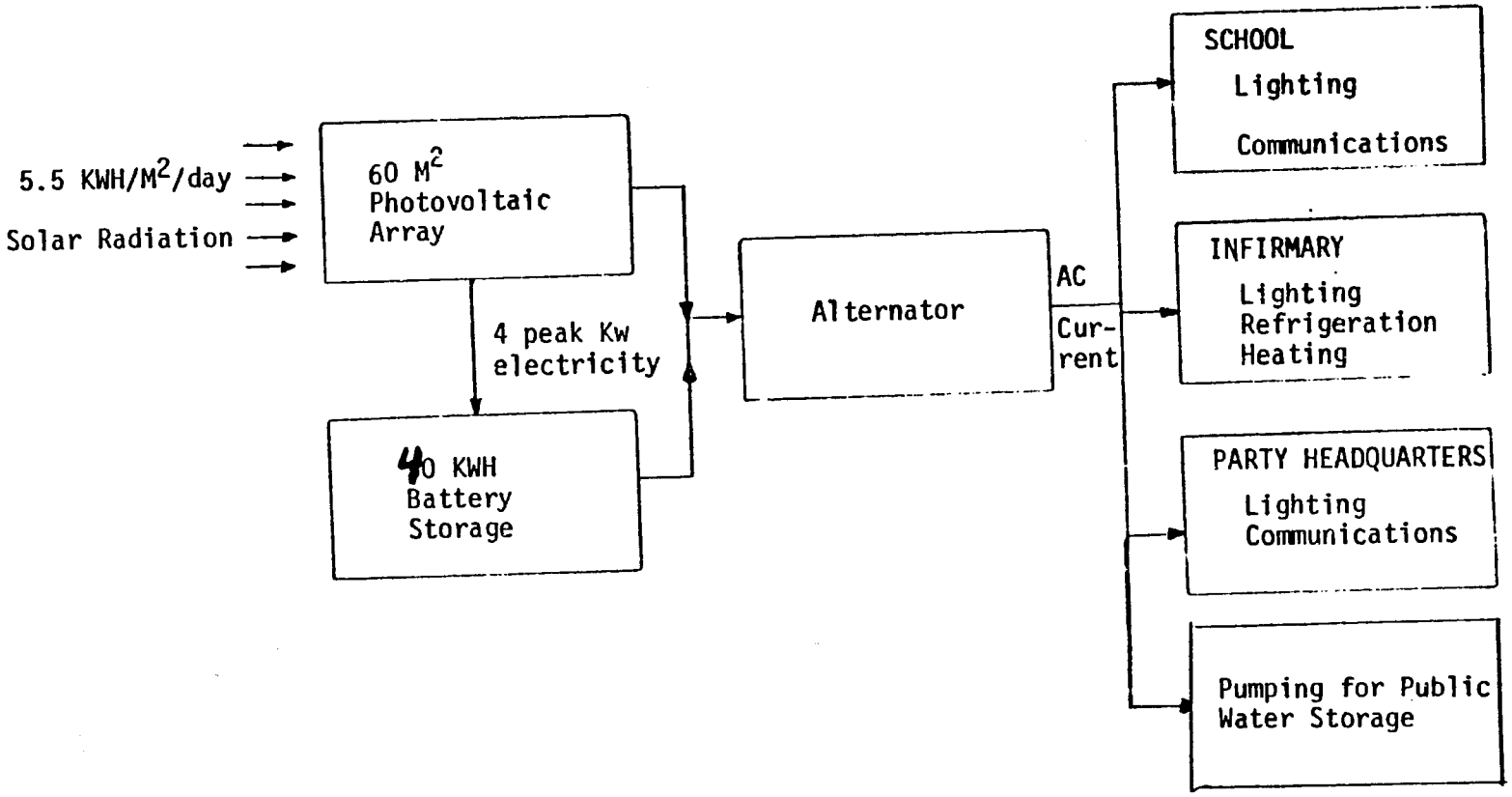

TABLE XI

Estimated Electricity Use Factors for Priority Public Uses in Hasse El Frid

Use	Peak Power Watts	Use Factor Hrs per Week	Subtotal Watt Hrs/Week
Water Pumping	500	30	1500
School			
Lighting 3 Rooms & kitchen (Fluorecent)	1000	20	2000
*Heating for cooking	1000	5	*
Other (radio, etc)	300	10	3000
Subtotal			5000
Infirmary			
Lighting	180	20	3600
Cold storage	80	50	4000
*Electric Hot Water	*1000	5	*
Solar Thermal Hot Water and/or space Heating	-	Total Direct Solar	7600
Party Headquarters			
Lighting	120	20	2400
Radio/TV	100	30	3000
			5400
Mosque			
Lighting	180	10	1800
Sound System	100	5	500
			2300
Totals*	2560	205	35.3 kwh/week 1835.6 kwh/yr

* These values have not been added in the totals because it is possible that these uses will not be included in the final system. These will either be replaced by solar thermal devices or not supplied.

The total energy requirements amount to 1800 kwh/year with a safety and growth factor; the system should be designed to supply 1900 kwh/year. The peak power demand is estimated to be 300 kw for the system use shown in Table XI and the local solar radiation data are shown in Table II and Figure 2. For this combination a 4.0 peak kilowatt solar array and 40 kwh of battery storage was selected. This system should provide electricity for the priority public uses and storage to cover a two to three-day period with less than the design level of sunlight. Figure 9 is a schematic representation of the system. It is possible that a final system of less than 4 peak kw could be needed, especially if heating and cooking energy are provided by forms other than electricity.

III.6.B. Technical Details of a Solar Photovoltaic Electricity System for Priority Commercial Uses

The location map of Hassi El Frid (see Figure 1) defines an area of the village for full-time and weekend commercial activity. The shops are narrow, windowless rooms with only the open door admitting light. Flat or window glass is not manufactured in Tunisia and thus only the school and a few other buildings in the village have glass windows. Approximately 10 shops are used during the week and on market days over 30 shops and numerous open areas are occupied. Lighting would be limited to a few hours each day in the shops and other electrical uses would be controlled as is suggested in the discussions covering the priority public uses. Initially it is expected that only a few shops will connect to the system and thus their use of electricity will be governed by their ability to pay. Very likely as much electricity as people want will be available.

As more and more people connect to the system the power demand will begin to approach the generating and storage limit. As this happens it is possible that controls such as those described earlier will be instituted. Table XII contains the estimated energy demands for the priority commercial uses to be supplied. These uses include outside lighting near the shops to facilitate early morning set up for the one day a week public market and for special use in the evenings. These lights would not be used routinely and would be turned on only for special functions. The data in the Table shows that including a growth/safety factor of 20% the commercial uses would require approximately 4.4 peak kw. A storage of approximately 5 times the peak demand of 4 hours (100 kwh) is also provided. Figure 10 is a schematic representation of the system for this sector of the village.

III.6.C. Technical Details of a Solar Photovoltaic Electricity System for Priority Residential Uses.

Hassi El Frid shown in Figure 1 has approximately 60 houses and anticipates 20 more within the next year. The houses have two or three rooms, generally have few glass windows and have no running water or inside plumbing. A few houses have batteries for radios

Figure 10

Schematic Representation of Major Components of
Photovoltaic Electrification for Priority Commercial Uses

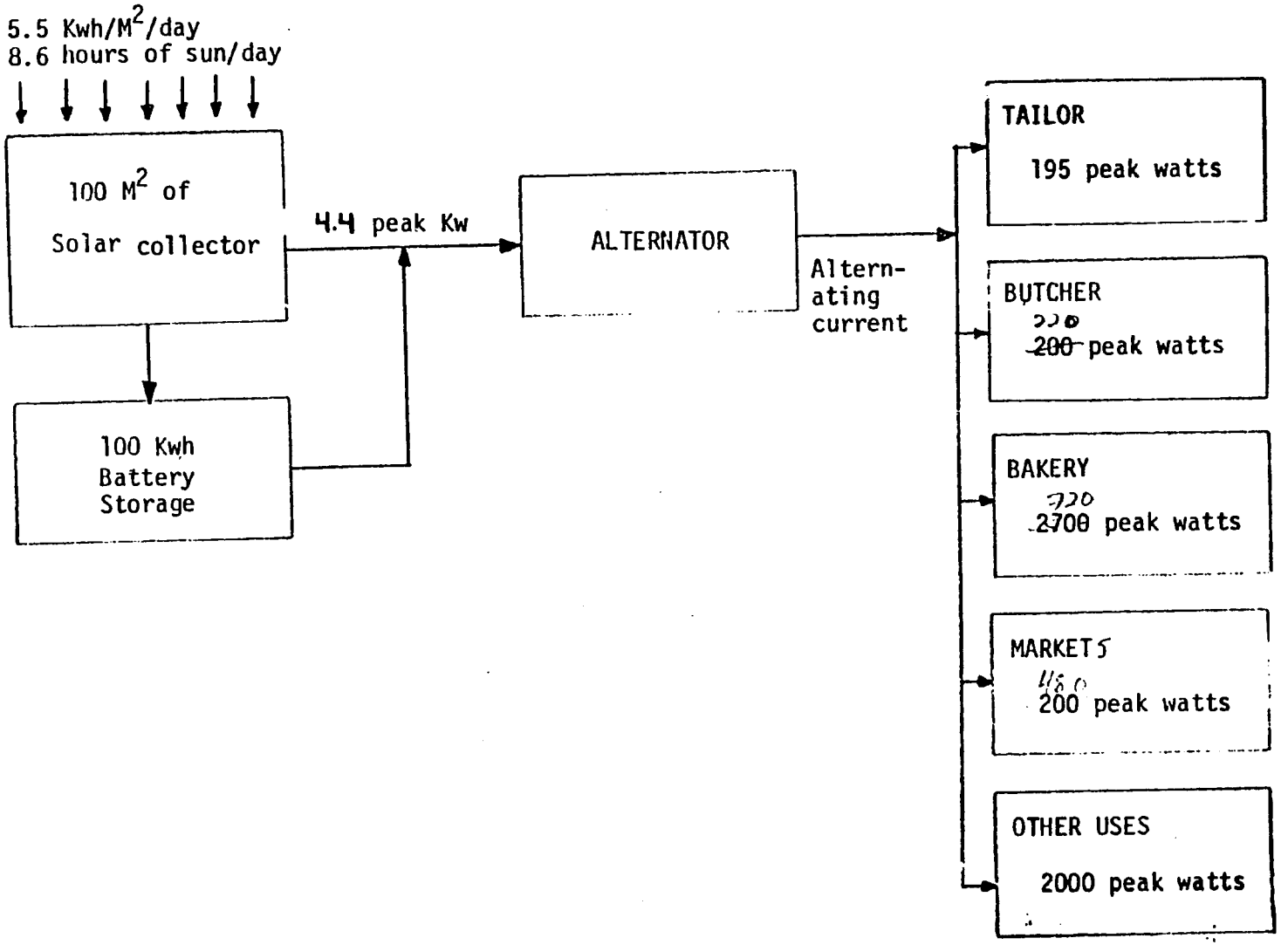

Table XII

Estimated Minimum Electricity Demands
From Priority Commercial Uses *

Use	Power Watts	Use Factor Hours/Week	Subtotal Kwh/Week
Full-time Shops			
• Tailor			
Lights	120	40	4.8
Sewing machine	75	20	1.5
• Butcher			
Lights	120	40	4.8
Refrigeration ($0.3M^3$)	100	70	7.0
• Bakery			
Lights	120	40	4.8
Grain mill	500	5	2.5
Refrigeration ($0.3M^3$)	100	70	7.0
• Market			
Lights	180	40	7.2
Refrigeration ($0.3M^3$) (3 units)	300	210	6.3
Weekly Market Uses			
Central lighting	1000	40	40.0
Miscellaneous electricity	1000	10	10.0
TOTAL	3615	585	95.6
		4986.8	Kwh/year

*Adding 20% for growth, the system required will have 4.4 peak KW capacity and 600 KWh/year use.

Figure 11

Schematic Representation of Major Components of Photovoltaic Electricity System for Household Uses

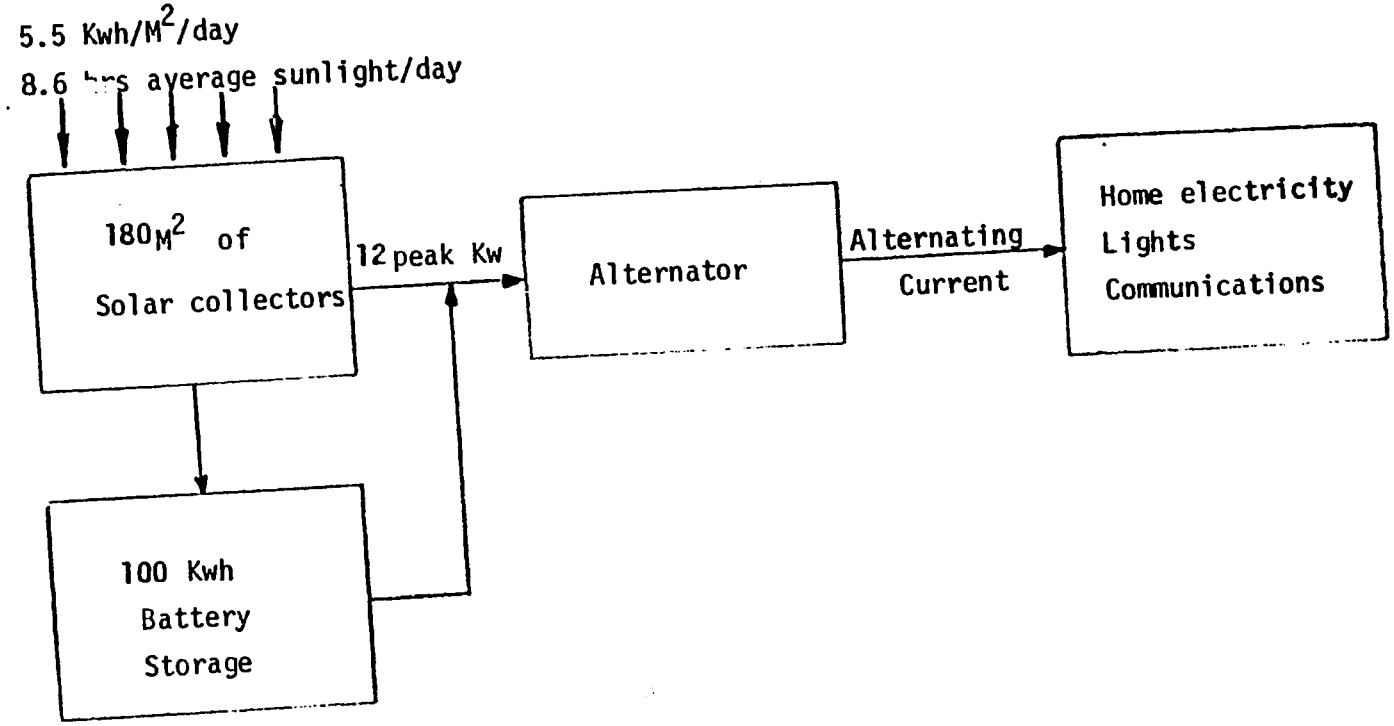

TABLE XIII

MAJOR COMPONENTS OF VILLAGE PV ELECTRIFICATION SYSTEM

ITEM	NUMBER	DESCRIPTION	SUPPLIER
Pump & elevated storage	2	0.5 hp pump and 30 m^3 tank	AID
PV cell, batteries controls, etc.	1	20.4 peak kw, 240 kwh battery storage, alternator, controls	AID
New well	1	Hand dug, enclosed well near school	GOT
Distribution system (wire, pole, meters, fencing, buildings, etc)	-	Distribution system for electricity and other structures	GOT
Fixtures & wiring in public buildings	-	Flourescent lights in school, infirmary, party headquarters; incondescent lights in market place and on mosque	GOT
Selected electrical appliances & devices	-	$0.3m^3$ refrigerator for infirmary; 75 liter solar hot water system for infirmary; solar thermal hot air space heating system for school & infirmary.	AID
Motorcycle & short wave radio		For use in operating system	GOT

or televisions and lighting is by kerosene lamps. The principal use of electricity would be for lighting, radios; cooking is done by butane gas. The income of the village residents is low and other electrical appliances will probably not be introduced rapidly. The Tunisian National Power Agency (STEG) uses 300 watts per household as a planning number for villages receiving electricity kw. However, for a photovoltaic system, a figure of 150 watts or one-half of the conventional amount is used.

This value was selected to keep the cost of the system as low as possible, and still allow adequate lighting and other power uses. Also, b ecause the cost of photovoltaics is expected to decrease rapidly over the next several years, by the time the present system capacity is exceeded by demand additional panels and battery storage will be much cheaper. At that time, expansion of the system may cost no more per kwh of capacity than traditional central grid electrification. Because of economic conditions in the village all the potential users which the system is designed to ultimately serve will probably not be able to afford to connect or use electricity immediately. Thus, connections and electricity use will grow over time. It is expected that STEG will establish a connection charge and rate system similar to that used for other rural electrification projects. A total charge of 400 dinars per connection will be charged with 40 dinars being paid by the user and the remaining to come from the Governorate and STEG. Eelctricity will cost 300 millimes per kwh. Based on this the village of 80 houses will be served by a 12 peak kw system. Assuring 4 hours operation per day when the system is fully connected and 3 days reserve, the battery storage should amount to 100 kwh. Figure 11 is a schematic representation of the proposed village residential electricity system.

Table XIII presents a summary of major component for the three sectors in the village.

Technical Details Subproject II

The training subproject will involve four discrete components. The renewable energy and energy policy course will be a one day seminar for 15 senior energy policymakers. The seminar would be held outside Tunis, so that the participants would be free from distractions to the maximum extent possible. The objectives of this seminar are threefold:

1) to create an awareness of renewable energy and its applications;
2) to stimulate the inclusion of renewable energy in development planning;and,
3) to solicit ideas on its application to Tunisian energy needs.

Invited to participate in the seminar will be six or seven officials from the Ministry of Industry, Mines and Energy at the Deputy Director level or higher; two or three from the Ministry of Agriculture; and two each from the Ministry of Planning, STEG, and ENIT.

The seminar leader will be an expert in renewable energy technology from the United States, and in additiona there will be one other American, an expert in energy planning. Balancing the foreigners would be two Tunisian participants, who would present brief papers. The general content of the seminar will be as follows:

A. Review of Tunisia's Energy Future
   1) Demand by Sector
   2) Supply (Fossil and Hydro)
      a) Source
      b) Prices
   3) Supply (Nuclear)
      a) Sizing
      b) Cost
      c) Timing
      d) Safety

B. Alternative Renewable Energy Sources--Technology, Costs
   1) Solar Thermal
   2) Photovoltaic
   3) Biomass
   4) Wind
   5) Geothermal
   6) Energy Generation from Waste

C. Applications of Alternative Energy in Tunisia
   1) Present Applications
   2) Twenty-year Horizon
   3) Planning a Phase-in of Alternative Energy

The formal will consist of four presentations (energy future, nuclear, anternative energy, and applications), followed by division of the group into three working groups, each meeting to work on an alternative energy question. Finally, the rapporteur for each group will report on the group's conclusions, and a general summary will close the seminar.

The second training course, Renewable Energy Technologies and Applications, will take place initially in Tunis, over a ten-day period, meeting three hours per afternoon, five days per week. Field demonstrations will take place in Central Tunisia over a final two-day period. There will be about twenty-five participants in the course, tentatively divided among agencies and ministries as follows:

Ministry of Mines, Industry, and Energy	5
Société Tunisienne de l'Electricité et du Gaz	3

Ministry of Plan	2
Ministry of Agriculture	4
ENIT	4
Centre de Recherches du Génie Rural	3
District de Tunis	2
ETAP	2

1) Training Objectives

The objectives of this course are first, to provide a broad technical knowledge of six alternative energy sources which appear to have a future in Tunisia (biomass, solar thermal, photovoltaic, wind, firewood, waste); second, to illustrate through use of Tunisian data how such energy systems are designed and costed; third, to transmit an understanding of and appreciation for the multiple end uses to which such technologies can be put.

2) Methodology

The methodology used will be a mixture of traditional lectures on the technologies, using multimedia teaching aid (slides, video, alternative energy demonstration equipment, films) and workshops, designing and costing systems using Tunisian data. This phase will last eight teaching days, at three hours per day. It will be followed by a field demonstration of technology applications, at the site of the agricultural project described elsewhere in this paper. Course faculty will be the two American Experts who will have participated in the seminar on Renewable Energy and Energy Policy.

One of the features of this course is that each participant will be furnished extensive technical documentation on the various technologies, including, where appropriate, manufacturers' brochures and specifications, and descriptive material on testing and applications of technologies. A list of bibliographies and of American institutions and university and government programs dealing with alternative energy technologies will also be furnished. Providing such information to each participant is done to bridge what is perceived by the team as a considerable gap in literature and source of information within Tunisia. Engineers, managers, and scientists will be able to subscribe to journals, obtain books, and correspond with persons in the United States who are working in renewable energy fields.

3) Content

For each technology the following content will be provided:

a) Theoretical Basis
b) Materials
c) Design Elements
d) Actual Performance Standards
e) Current Availability: Sources and Prices

f) System Design Applications and Engineering
g) Current Applications and Problems
h) Research; Future of the Technology

Where feasible, hardware or working models will be on display, in addition to the field application which will be visited at the end of the course.

4) Evaluation

Evaluation will be done in two phases.

a) Short-term Evaluation. Each participant will be asked to reply to several questions on a survey form, prior to taking the course. These questions will attempt to elicit attitudes toward and understanding of non-nuclear alternative energy sources for Tunisia. A follow-up survey will be made on the last day of the course following the conclusion of the field demonstrations. Attitudinal cahnges will be measured, as will participants' increased understanding of the promise and problems of alternative energy sources. The follow-up survey will also seek anonymous comments and criticisms of the course itself:, preparation and expertise of the trainers, usefulness of materials furnished, organization, etc.

b) Long-term Evaluation. Each participant will be contacted by letter one year following the date of the course. An attempt will be made, via questionnaire, to determine whether the participant is involved to any greater extent than previously with alternative energy. Positive indications would be regular reading of technical journals, research performed, projects designed and submitted for funding, etc.

5) Desalinization

AID was repeatedly asked about the application of solar energy to large-scale water desalinization projects. The interest in this centers on the Gabes-Medenine-Ben Gardane coastal strip, the use envisaged being irrigation. AID shared the interest of Tunisian officials, their belief that the solar technology for large-scale production is largely experimental and that it is and will remain for the foreseeable future too costly. Furthermore, AID raised the question of the desirability of concentrating more population and cultivation in this area, rather than dispersing growth to Central Tunisia, for example.

Despite this, Tunisian interest remains undampened, and it was concluded that it would be desirable to send a specialist to Tunisia to meet with officials from the Ministry of Industry, Mines and Energy; the Ministry of Agriculture, and ENIT. This specialist should describe the large desalinization programs which are currently in operation or in the design stage; he should visit the area with Agriculture officials, and judge the scope of the project which would be required, providing a very rough cost estimate.

The total time in Tunisia of the specialist would be five days.

6) Fellowships

hree Tunisians should receive in-depth training in alternative energy technologies in the United States, so as to form a local resource base which can be drawn upon in future years. Such training should be about four months' duration, including a month spent visiting manufacturers' sites and institutions other than the training location.

Training fellowships should be given to one person from each of the following: Ministry of Industry, Mines and Energy; ENIT; and STEG.

The University of Florida at Gainsville is considering setting up an energy training program which could accept the Tunisian trainees; Brookhaven is another feasible location. The conduct of training will include the physical theory upon which the technologies are based; manufacturing methods and materials; systems design; applications of technologies to development; and other subproject areas.

It will be possible to provide excellent training in a three-month period, if the trainees possess an engineering background and speak English. Ideally, trainees would be recent recruits to the staffs of the three institutions, and would be nominated for a major role in alternative energy. This is clearly possible in STEG, where planning for future energy provision is well underway, and where an informal nucleus of young engineers interested in new energy sources already exists. It is likewise possible within the Ministry, where the interest of the Chef du Cabinet would be translated into formalization of an alternative energy role. Within ENIT, a knowledgeable faculty member could play an important consulting role to various government departments (e.g. the Depart ment de la Production Vegetale within the Ministry of Agriculture). In time, and as alternative

energy begins to find wider application within Tunisia, the ENIT curriculum could reflect this in its courses.

ANNEX 7

SOCIAL ANALYSIS

Village Base line characterisitics:* Hassi El Frid

1. Geography/Climate

The village of Hassi el Frid is the population center of the district of Hassi El Frid, which is part of the governorate of Kasserine, (the name Hassi El Frid as used in this section refers to the village unless otherwise indicated). Hassi El Frid, located in central Tunisia, is 45 kilomteres southwest of Kasserine. The dirt road connecting the two places passes over a low mountain range. The terrain leading to the village is essentially flat and ,except for land surrounding the village, barren. Some areas are covered by wild grasses such as alfa, used for paper-making in Kasserine.

The climate in Hassi El Frid varies from very hot and dry in the summer to wet and quite cold in the winter. Temeratures near $0^{o}c$ are common in the winter. The district of Hassi El Frid, 27,360 hectares, is bounded by the following districts: on the south by Ali Ben Aoun, on the east by El Hechmi, on the north by El Aouija and on the west be El Kamour.

*These data were collected by visual observation and unstructured conversation with villagers in Hassi El Frid and with Government officials. They have not been verified and are presented here to give a sketch of the village. As part of the design phase of the project, a detailed socio-economic study is planned to provide baseline data. A comprehensive energy use study will be carried out as part of the project.

2. Village Population and Physical Characteristics

The district of Hassi El Frid has approximately 3200 inhabitants, of whom 600 live in Hassi El Frid. The village (see sketch map, page has a mosque (under construction), a dispensary staffed by a resident male nurse, a four room primary school, a building housing the political party headquarters, and also used as a community center and buildings for forty stores and eighty houses. Of the eighty houses in the village, approximately fifty are modern, two-room stone houses with water seal toilets and a small kitchen, but no electricity or running water. The other houses are older. The Government, under its housing program, is building an additional twenty houses. The hope is to resettle people from outlying areas into Hassi El Frid. All land is collectively owned. The issuance of clear title to land is being reviewed by the Ministry of Justice, the Ministry of Agriculture and the Office of Topography. No clear titles have been issued yet, although certificates of possession have been issued to a few applicants.

3. Village Economy

70% of the people in the district of Hassi El Frid depend on agriculture for a living. Dry cereal is grown, as are almond, fig, apricot and olive trees. There are some irrigated vegetable farms, livestock breeding and gathering of esparto grasses.

In the district there are 15 wells, 11 private and four public ones. In the village of Hassi El Frid there are six wells, five of them private with diesel engines. The public well is manually operated. Water from the private wells is sold for TD1.600 a cistern (about 750 gallons).

There appears to be a large number of unemployed adults in the village. Whether this is seasonal was not determined. Economic activity in the village, other than agriculture, consists of commercial activities and service jobs. Although there is building space for forty stalls, several appeared empty or used for storage. There are several dry good and food stores, a butcher, four grain grinders (although only one was working), a welder and tire repairman, and a restaurant. The school is staffed by five teachers, three of whom live in government-provided housing on the school ground. The male nurse, in charge of the dispensary, sees about ten patients daily. All major cases are sent to Kasserine or wait for the weekly arrival of the doctor. The nurse spends one day a week in Kamour, a neighboring village. A doctor visits Hassi El Frid once a wekk as do a midwife and Social welfare assistant. Religion is a major obstacle to family planning efforts. Once a month a mobile library stops in the village.

Six of the farmers in the village are considered prosperous, each owning between 100-200 sheep. Four of the merchants have capital resources estimated up to TD 2000. Government and cellulose plant workers, who number 15, make up to TD750 /year. There are about 70 seasonal alfa pickers.

Hassi El Frid is the district market place and a large open-air market operates on Saturdays.

4. Village Energy Use

The major sources of energy in Hassi El Frid are diesel fuel, kerosene, bottled gas and wood. These are used for lighting, cooking, space conditioning and mechanical power.

Lighting

Lighting is provided mainly by kerosene and candles. Lighting needs are increased due to local architecture. The stores have no windows, the only natural light comes through the door. The rooms in houses generally have only one small window.

Some of the stores burn candles for 2-3 hours in the summer months and longer during winter. A 6.5 inch candle costs 30 millimes and burns for approximately three hours under relatively windless conditions. One or more candles are burned, depending on business needs and area to be lighted.

Kerosene is used for lighting in both homes and stores. It was not determined whether some people use both kerosene and candles for lighting or whether just one of the lighting sources was used. The infirmary uses just candles for lighting. The kerosene used in Hassi El Frid is purchased in Kasserine for TD 0.050/liter. It retails for TD 0.060-0.070/liter in the village.

Cooking

Cooking is either with bottled gas (butane) or wood. A little charcoal is used for making tea. Charcoal making is apparently illegal in the village and villagers were reluctant to say where the charcoal came from. Purchased charcoal costs TD 0.140/Kg. Village women gather wood in surrounding areas or purchase it at TD2.000/Kg.

The village chief estimated there were 80 houses in the village, with 20 being built. Roughly 50 houses (60%) use wood for cooking, the other 30 houses use bottled gas. The gas is purchased in Kasserine at TD1.700 for 25cu.ft. (88,000BTU). The cost in Hassi El Frid is TD2.000 A tank of gas lasts about one month; the village uses 30 tanks of gas a month.

Heating

During winter months, when the temperature can drop near freezing, homes are heated by burning wood. No information is available on how much wood is burned, how it is burned, for how many hours a day and during what months.

Cooling

The infirmary has a small propane refrigerator for storing perishable medicines. In July, 1979, the refrigerator had been broken for five months; no one in the village knew how to repair it. It was unclear why it had not been sent to Kasserine or some other place for repair.

There are at least two other propane-powered refrigerators in the village. One of them, recently purchased in used condition and installed in a grocery store, was operating but not cooling. The village butcher is limited in his activities because he has no refrigeration. Meat not sold at the end of the day cannot be kept due to spoilage problems.

Other Energy Uses

There are four diesel-powered grain grinders in the village. In July, 1979, only one was working. It is an 18 HP grinder, fueled with diesel purchased in Kasserine. Diesel fuel, which is subsidized by the Government, costs TD 15.000 for 200 liters in Hassi El Frid (US$.71/gallon.)

There are 9 battery-powered televisions and several radios in the village. The 12 volt batteries are recharged in Kasserine; 1.5 volt dry cell batteries are sold locally for TD 0.125 each.

There are several vehicles in the village (3 station wagons, 3 trucks and 7 tractors). The station wagons and trucks also carry passengers and produce to Kasserine. Round trip fare between Hassi El Frid and Kasserine is TD 1.400.

Social Issues Raised by Project

Both village leaders and villagers support the project as it has been explained to them. Expressed desires for energy have focused on lighting for homes, the school, dispensary and party headquarters. The school and party headquarters are used for community activities in the evening so lighting will greatly increase their utility.

Power for the dispensary will permit stocking of perishable medicines. Solar space heating and hot water will improve patient

care. Currently, the dispensary uses candles for lighting, has no running water nor heat in the winter.

While the villagers have discussed the project in general terms, they have not yet been involved actively in its design. During phase I, the technical design of the system, village participation will be crucial. Not everyone in the village will get power. Thus, the villagers will have to decide who will benefit directly. As only 150 watts will be provided to each participating house, villagers will have to decide how power will be used. E.G.: 150 watts can provide 3-50 watt incandescent light bulbs or two 25 watt flourescent light bulbs and a 100 watt refrigerator, etc.

The villagers will have to deal with many new issues as they define their participation in the project. These issues include:

1) How will participating households be selected?

2) How will household energy demand be regulated?

3) How will the agricultural demonstration sites and direct beneficiaries be selected?

4) How will commercial establishments be selected for participation and how will their electricity demand be regulated?

To assist the village in making these choices, a technologist and rural sociologist must work together to explain the system and discuss various options with the villagers. As the system initially will not be used to capacity, allocation problems may not develop until later in the project. Nevertheless, they must be anticipated. In order to approximate existing rural electrification conditions, villagers will pay the same hook-up charges and electric rates that STEG charges other customers.

Selected Energy Prices (July 19, 1979)
U.S $/gallon

	TUNIS	HASSI EL FRID*
Premium gasoline	1.92	N/A
Regular gasoline	1.82	N/A
Kerosene	.42	.67
Diesel	.61	.71
Charcoal	.14/lb	.16/lb

* Hassi El Frid prices are based on information given by villagers and Store keepers. These prices were not verified.

ANNEX 8

Cost and Supply of Electricity to Rural Areas

The cost of electricity and connections in Tunisia is shown in Table 1 (STEG, Rate Schedule). Table II shows the transmission charges (Higher Voltage). The provision of power from a central grid connection to a rural village has been studied by STEG and the following observations and "rules of thumb" have been developed:

- The design average for the expected load from each connection in a rural village is 300 watts peak and the first year average use per connection is estimated to be 300 KWh.
- During the first year an average of 30% of the possible users are connected to the supply and this grows by approximately 30% per year.
- When an isolated system such as a diesel is placed in a village to supply electricity a full time resident operator is necessary.

Table III is a rough calculation prepared by STEG to show the cost of supplying electricity to Hassi El Frid from the central grid. The total cost in 1978 dinars to bring a transmission line to the village from the nearest main transmission line near Feriana is estimated as 102,710 Dinars or approximately $257,000 U.S. This service would not necessarily serve the farms or areas away from the village. STEG's average system costs to extend the grid are 400 Dinars ($1000) per connection. Thirty percent (30%) of the cost is for labor and 70% for equipment.

A comparison produced by NASA relating U.S. costs of photovoltaic, diesel electric and power line extension is quoted directly in the following passage.

S.T.E.G.

DP/PEG 1

TKI/hl

1-12-78

TABLE I

TARIFS DE L'ELECTRICITE BASSE TENSION

Nota : DT = Dinar tunisien - mill = millime tunisien - ab = abonnement

TARIFS BASSE TENSION (220 V - 110 V)	Redevance Abonnement (hors TPS)	Redevance de Puissance (hors TPS)	Prix de l'énergie par tranches mensuelles de consommation (toutes taxes comprises)
Force motrice (3 kVA ou plus)	—	100 mill/kVA-mois	de 0 à 10 kWh/kVA : 46 millimes/kWh au delà de 10 kWh/kVA : 42 millimes/kWh
Eclairage (1 kVA ou 2 kVA)	100 mill/ab-mois	—	Tranche unique : 46 millimes/kWh

TARIFS SPECIAUX B.T.	Redevance Abonnement (hors TPS)	Redevance de Puissance (hors TPS)	Prix de l'énergie (toutes taxes comprises)
Usages agricoles avec effacement en pointe	700 mill/ab-mois	—	Postes horaires journaliers (*) : Jour : 20 millimes/kWh Nuit : 10 millimes/kWh Pointe : Effacement
Chauffe-eau	400 mill/ab-mois	—	Postes horaires journaliers (*) : Hors-pointe : 18 millimes/kWh Pointe : Effacement
Chauffage et climatisation (tarif provisoire)	200 mill/ab-mois	—	Tranche unique : 32 millimes/kWh
Huileries et Mouture	300 mill/ab-mois	100 mill/kVA-mois	Tranche unique : 30 millimes/kWh
Eclairage Public	500 mill/ab-mois	—	Tranches mensuelles de consommation : de 0 à 30 kWh/kVA : 46 millimes/kWh au delà de 30 kWh/kVA : 26 millimes/kWh

(*) Les postes horaires sont les suivants pour tous les jours de la semaine à l'exception du Dimanche dont la consommation est facturée uniformément au Tarif "Nuit".

Mois de	Décembre, Janvier et Février	Mars à Novembre
Jour	de 6 h à 17 heures	de 7 h à 18 heures
Pointe	de 17 h à 21 heures	de 18 h à 22 heures
Nuit	de 21 h à 6 heures	de 22 h à 7 heures

S.T.E.G.
DP/P.E.G. 1

TABLE II

TKI/M1
1 12-78

TARIFS DE L'ÉLECTRICITE
EN MOYENNE ET HAUTE TENSION.

Nota : DT = Dinar Tunisien - mill = millime tunisien -ab = abonnement

TARIFS MOYENNE TENSION (30 kV, 15 kV, 10 kV)	Redevance Abonnement (hors TPS)	Redevance de Puissance (hors TPS)	Prix de l'énergie (toutes taxes comprises)
à postes horaires	15,000 DT/ab-mois	1,500 DT/kW-mois	Postes horaires journaliers (1) Jour : 18 millimes/kWh Pointe: 30 millimes/kWh Nuit : 9 millimes/kWh
à tranches	2,500 DT/ab-mois	0,100 DT/kVA-mois	Tranches mensuelles de consommation: de 0 à 50 kWh/kVA : 30 millimes/kWh au delà de 50kWh/kVA: 26 millimes/kWh

TARIFS SPECIAUX MOYENNE TENSION	Redevance Abonnement (hors TPS)	Redevance de Puissance (hors TPS)	Prix de l'énergie par postes horaires journaliers (1) (toutes taxes comprises)
à usage agricole avec effacement en pointe	2,500 DT/ab-mois	1,500 (2) DT/kW-mois	Jour : 18 millimes/kWh Nuit : 9 millimes/kWh Pointe: Effacement
Tarif HT secours	15,000 DT/ab-mois	0,500 DT/kW-mois	Jour : 26 millimes/kWh Pointe: 47 millimes/kWh Nuit : 9 millimes/kWh

TARIFS HAUTE TENSION (20 kV - 150 kV -90 kV)	Redevance Abonnement (hors TPS)	Redevance de Puissance (hors TPS)	Prix de l'énergie par postes horaires journaliers (1) (toutes taxes comprises)
Tarif général Haute Tension	—	0,500 DT/kW-mois	Jour : 15 millimes/kWh Pointe : 22 millimes/kWh Nuit : 8 millimes/kWh
Tarif HT secours	30,000 DT/ab-mois	0,100 DT/kW-mois	Jour : 21 millimes/kWh Pointe : 37 millimes/kWh Nuit : 8 millimes/kWh

(1) Les postes horaires sont les suivants, pour tous les jours de la semaine à l'exception du Dimanche dont la consommation est facturée uniformément au Tarif " Nuit " :

Mois de	Décembre, Janvier et Février	Mars à Novembre
Jour	de 6 h à 17 heures	de 7 h à 18 heures
Pointe	de 17 h à 21 heures	de 18 h à 22 heures
Nuit	de 21 h à 6 heures	de 22 h à 7 heures

(2) Compte tenu du fait que pour cet abonnement spécial la puissance souscrite en pointe est égale à zéro, l'application du taux de 1,500 dinars/kW de "puissance réduite" revient en fait à facturer le kW souscrit de jour à un taux de 0,45 x 1,500 = 0,675 dinar par kW de puissance souscrite en jour.

TABLE III

ELECTRIFICATION VILLAGE HASSI EL FRID

DESIGNATION	COUT EN DINARS *
1 - ALIMENTATION PAR LIGNE AERIENNE	
- Ligne M. T Monophasée N. T (35 km)	10 900
- Equipements Postes Mono. (2 x 25 kVA)	1 750
- Ligne Aérienne B. T Mono (2 km)	7 600
- Eclairage Public (10 F.)	1 100
- Branchements (70)	2 800
- TOTAL.....	24 160
2 - ALIMENTATION PAR MICRO-CENTRAL	
- Groupe 40 kVA	8 500
- R. B. T. 4 fils (2km)	6 150
- Eclairage Public	1 100
- Branchements	2 800
- TOTAL.....	18 550
N. B. Les coûts mentionnés ci-dessus sont estimatifs et variables de + ou de - de 15 %	

COUTS 1978

S.T.E.G.
DP/P.E.G. 1

TARIFS DE L'ELECTRICITE EN MOYENNE ET HAUTE TENSION.

Nota : DT = Dinar Tunisien - mill = millime tunisien -ab = abonnement

TARIFS MOYENNE TENSION (30 kV, 15 kV, 10 kV)	Redevance Abonnement (hors TPS)	Redevance de Puissance (hors TPS)	Prix de l'énergie (toutes taxes comprises)
à postes horaires	15,000 DT/ab-mois	1,500 DT/kW-mois	Postes horaires journaliers (1) Jour : 18 millimes/kWh Pointe: 30 millimes/kWh Nuit : 9 millimes/kWh
à tranches	2,500 DT/ab-mois	0,100 DT/kVA-mois	Tranches mensuelles de consommation: de 0 à 50 kWh/kVA : 30 millimes/kWh au delà de 50kWh/kVA: 26 millimes/kWh

TARIFS SPECIAUX MOYENNE TENSION	Redevance Abonnement (hors TPS)	Redevance de Puissance (hors TPS)	Prix de l'énergie par postes horaires journaliers (1) (toutes taxes comprises)
à usage agricole avec effacement en pointe	2,500 DT/ab-mois	1,500 (2) DT/kW-mois	Jour : 18 millimes/kWh Nuit : 9 millimes/kWh Pointe: Effacement
Tarif HT secours	15,000 DT/ab-mois	0,500 DT/kW-mois	Jour : 26 millimes/kWh Pointe: 47 millimes/kWh Nuit : 9 millimes/kWh

TARIFS HAUTE TENSION (220 kV - 150 kV -90 kV)	Redevance Abonnement (hors TPS)	Redevance de Puissance (hors TPS)	Prix de l'énergie par postes horaires journaliers (1) (toutes taxes comprises)
Tarif général Haute Tension	—	0,500 DT/kW-mois	Jour : 15 millimes/kWh Pointe : 22 millimes/kWh Nuit : 8 millimes/kWh
Tarif HT secours	30,000 DT/ab-mois	0,100 DT/kW-mois	Jour : 21 millimes/kWh Pointe : 37 millimes/kWh Nuit : 8 millimes/kWh

(1) Les postes horaires sont les suivants, pour tous les jours de la semaine à l'exception du Dimanche dont la consommation est facturée uniformément au Tarif " Nuit " :

Mois de	Décembre, Janvier et Février	Mars à Novembre
Jour	de 6 h à 17 heures	de 7 h à 18 heures
Pointe	de 17 h à 21 heures	de 18 h à 22 heures
Nuit	de 21 h à 6 heures	de 22 h à 7 heures

(2) Compte tenu du fait que pour cet abonnement spécial la puissance souscrite en pointe est égale à zéro, l'application du taux de 1,500 dinars/kW de "puissance réduite" revient en fait à facturer le kW souscrit de jour à un taux de 0,45 x 1,500 = 0,675 dinar par kW de puissance souscrite en jour.

TKI/hl

S.T.E.G.

1-12-78

DP/PEG 1

TARIFS DE L'ELECTRICITE BASSE TENSION

Nota : DT = Dinar tunisien - mill = millime tunisien - ab = abonnement

TARIFS BASSE TENSION (220 V - 110 V)	Redevance Abonnement (hors TPS)	Redevance de Puissance (hors TPS)	Prix de l'énergie par tranches mensuelles de consommation (toutes taxes comprises)
Force motrice (3 kVA ou plus)	—	100 mill/kVA-mois	de 0 à 10 kWh/kVA : 46 millimes/kWh au delà de 10 kWh/kVA : 42 millimes/kWh
Eclairage (1 kVA ou 2 kVA)	100 mill/ab-mois	—	Tranche unique : 46 millimes/kWh

TARIFS SPECIAUX B.T.	Redevance Abonnement (hors TPS)	Redevance de Puissance (hors TPS)	Prix de l'énergie (toutes taxes comprises)
Usages agricoles avec effacement en pointe	700 mill/ab-mois	—	Postes horaires journaliers (*) : Jour : 20 millimes/kWh Nuit : 10 millimes/kWh Pointe : Effacement
Chauffe-eau	400 mill/ab-mois	—	Postes horaires journaliers (*) : Hors-pointe : 18 millimes/kWh Pointe : Effacement
Chauffage et climatisation (tarif provisoire)	200 mill/ab-mois	—	Tranche unique : 32 millimes/kWh
Huileries et Mouture	300 mill/ab-mois	100 mill/kVA-mois	Tranche unique : 30 millimes/kWh
Eclairage Public	500 mill/ab-mois	—	Tranches mensuelles de consommation : de 0 à 30 kWh/kVA : 46 millimes/kWh au delà de 30 kWh/kVA : 26 millimes/kWh

(*) Les postes horaires sont les suivants pour tous les jours de la semaine à l'exception du Dimanche dont la consommation est facturée uniformément au Tarif "Nuit".

Mois de	Décembre, Janvier et Février	Mars à Novembre
Jour	de 6 h à 17 heures	de 7 h à 18 heures
Pointe	de 17 h à 21 heures	de 18 h à 22 heures
Nuit	de 21 h à 6 heures	de 22 h à 7 heures

Energy Cost*

Photovoltaic- The installed photovoltaic system costs, projected to 1986, for 600 to 10,000 peak watt systems are calculated from module and BOS cost estimates given in the preceeding section. For completeness the calculation includes a levelized annual replacement and maintenance cost conservatively estimated to be about 15% of the annual capital cost. The following assumptions were made: (1) annual energy output per peak watt, 1.6 kWh; (2) annual interest rate, 10% (ref. 8); and (3) system life, 20 years. The results are displayed in Table 3 as Levelized Annual Costs and Energy Cost, $/kWh.

TABLE VIII

Installed PV System Cost Projections

Year	Module Cost	BOS Cost	Total First Cost	Total Energy Cost $/kWh*
1978	13	15	28	2.33
1980	5	10	15	1.24
1986	.61	5	5.61	.47

*Total energy cost includes total first cost, cost of ~~K~~ capital, replacement and maintenance.

Alternative Power Sources

For purposes of comparison the cost of alternative power sources, namely, diesel/electric and utility powerline extension, are considered.

Diesel/electric - It is frequently stated that diesel generators offer a reliable source of electricity and that the initial cost is very low

Reference: Photovoltaic Power Systems for Rural Areas of Developing Countries. NASA Technical Memorandum 79097 (revised May 1, 1979(Lwis Research Center

for demands less than 10 kW. To ascertain actual cost experience, a survey was made of several suppliers. This survey indicates that costs, less shipping, ranged from $27000 for a 3 KVA generator to $5500 for a 10 KVA generator, plus $1000 for installation. The cost per kilowatt of capacity installed thus ranges from $1200 per kW. (Most applications discussed herein require 3 KVA continuous power, or less.) Further, the yearly maintenance costs equal or exceed the initial costs of the diesel generator, based on the recommended maintenance schedule. Also, experience in the U.S., where fuel is relatively cheap, indicates that for diesel generators run at maximum capacity annual fuel costs equal or exceed first cost of the generator. Lastly, it is recommended practice to provide a second diesel generator on-site as a back-up, to insure power availability.

Consideration of only the initial cost of a diesel generator can be quite misleading. Rather it is ne-essary to consider the levelized annual cost for the generator, operation and maintenance. In calculating energy costs, the following assumptions are made: (1) 1978 fuel cost, $2/gal. (based on recent cost in Ouagadougou, Upper Volta); (2) system life, 5 years; (3) annual interest rate, 10%; (4) fuel escalation of 7% per annum.

Powerline Extension - For calculation of cost of extending a line from an existing transmission line to the point of use, the following assumptions are made: (1) line costs, $4000/km (ref. 9); (2) electric energy cost, $.10/kWh; and (3) annual interest rate, 10%.

The cost break even point for photovoltaics in 4200 kWh and 17,000 kWh annual energy consumption, respectively, in 1978 and 1981. The cost break even point for photovoltaics is 5400 kWh and 12,000 kWh for 16 and 48 km line extension, respectively, in 1978; and 12,000 kWh and 25,000 kWh for 15 and 48 km extension, respectively, in 1981.

Conclusions

Experience with installed PV systems, which are currently powering a variety of services for users in rural or remote areas, confirms that PV systems can provide a viable approach to meet many of the basic energy needs in underdeveloped countries. PV system technical development is mature, reflected in the exclusive use of commercially available hardware for the systems described here. PV system reliability, based on evidence accumulated to date, appears to be satisfactory. PV system energy cost, today, is competitive with alternative power sources for applications requiring an energy consumption of 5000 kWh/year or less. Within this range of annual energy consumption lie many important applications relevant to rural areas of underdeveloped countries, see Figures 3 of 4 for examples. Over the next several years it may be anticipated that PV system energy cost will continue to drop steadily, approaching $.50/kWh in 1986. At that time it is likely that PV systems will be the least expensive source for all decentralized electrical generation in underdeveloped countries.

Inherent modularity permits PV systems to closely match a user's discrete needs for electrical power, from watts to tens of kilowatts or more. Likewise, because of modularity, increments of power may be added as future needs dictate and resources allow. This stepwise, incremental option associated with photovoltaics is in sharp contrast with the requirements associated with central generation schemes.

We conclude that photovoltaics must now be viewed as a realistic energy alternative for developing countries. PV power systems hold promise of aiding current programs for improving quality of life and increasing

economic opportunity for rural populations. And, in the long pull, PV power systems promise a renewable energy resource which could markedly lessen dependence on imported fuels.

ANNEX 9 Wells and Ground water in Hassi El Frid

There are 11 functioning wells in the district of Hassi El Frid. One serves as a public water supply for the village and the remainder are private wells located throughout the District. These wells provide water for both human and animal drinking and for irrigation. Many of the eleven wells are manually operated (rope and bucket). However, some have diesel powered pumps. Two wells within 500 meters northeast of the village are powered by 6hp diesel engines while the public well to the south of the village has only a rope and bucket. Table 1* presents summary data on wells taken from records held by the Government Service in Tunis.

TABLE I
WELL DEPTH AND PERFORMENCE INFORMATION

Well Diameter (meters)	Depth M	Depth to water M	Pump Equippen	Estimated maximum Sustamed Yield
1.5	7.7	9.75	Diesel	3 l/s for 2 hrs
1.2	3.5	1.9	NO	---
3.68	7.75	6.18	Diesel	3 l/s for 2 hrs
3.65	7.38	4.23	Diesel	2.5l/sec
1	4.91	4.39	NO	Public well in Hassi El Frid.

**This is the average standing water elevation in the well.
*DATA developed by Ministry of Agriculture, Water and Soil Resources Directorate (Mr. KHANFIR).

The aquifer, though near the surface, averages 6 to 8 meters, at the top of the water table is limited in yield. Information from the villagers and the government geologists indicates during the summer most of the current wells are limited to a maximum pumping rate of 4 l/sec for two hour intervals several times a day. The total daily sustained yield from a 3 m diameter well with two meters of standing water is probably 15om^3 of water. This delivery capability is more than enough to meet the requirements of the applications.

ANNEX 10

Attached is some recent (1979) statistical information about Hassi El Frid village, the selected site for the Renewable Energy Project. We obtained this information (in Arabic) from Mr. Bouslimi Jamel, delegate of Kasserine.

HASSI EL FRID (DISTRICT)

Is bordered to the South by District of Ali Ben Aoun

To the East by El Hchim

To the North by El Aouija

To the West by El Kamour

Area: 27,350 Hectares

Population: 3,200

Number of households: 450

Number of mud-houses: 20

Name of Omida (Administrative head of a Parish): Mohamed Ali Dhibi

AGRICULTURE

# of Farmers	Total Area	Farmed Area	Non-Farmed Area	Olive Trees	Fruit Trees	Field Crops	Range Land	Forests	Farm Machninery: Tractors	Farm Machninery: Plows	Farm Machninery: Trailers	Water Tanks
200	17,350 Ha	13,850 Ha	13,500 Ha	3,000	1,500	9,350 Ha	8,500 Ha	6,000 Ha	7	7	7	6

WATER SUPPLY

Natural Springs	# of Public Wells	# of Public Cisterns	# of Private Cis	# of Private Well
0	4	3	48	24

lIVESTOCK

Goats/Sheep	Cattle	Camels	Horses	Mules	Donkeys	COOPERATIVES: # of Cooperatives	COOPERATIVES: # of Affiliated Members	COOPERATIVES: Capital
800 6,000	50	100	30	15	400	1	280	1.350,000

EDUCATION

# of Schools	# of Class Rooms	# of Grades	Number of Pupils: Boys	Number of Pupils: Girls	Number of Pupils: Total	# of Teacher	# of GOT Provided Houses for Teachers	# of Beneficiaires of the School Fee-ding Program	# of Scho-ol Drop-Outs	Secondary & Vocational Education: Secd. Educ.	Secondary & Vocational Education: Voct. Trng	Higher Educ
2	4	6	170	30	200	5	3	9	50	10	10	4

HEALTH

# of Dispensaries	Periodic Medical Visits	T.B. Patients	Patients Receiving Free Medi-Ca	Family Planning	People Eligible to Free Medi-Care Cards who have not obtained
1	1	3	140	100	400

EMPLOYMENT

Persons Unemployed	# of Registered Workers	# of Workers Abroad	# of Disabled Persons	# of Families engaged in the gathering of Alfa Grass	In Cottage industries	# of Tradesmen
270	20	10	60	200	300	40

REPUBLIQUE TUNISIENNE
MINISTERE DE L'INDUSTRIE, DES MINES ET
L'ENERGIE

- / -

APERCU SUR LA STRATEGIE DE L'ENERGIE DE LA TUNISIE

La Xème Conférence Mondiale de l'Energie tenue à Istambul en Septembre 1977 a été la "Conférence de la Prise de Conscience" :

- D'une part, du risque sérieux d'une grave crise de l'Energie vers 1990 , crise au sens non seulement d'une forte augmentation des prix, mais aussi et surtout d'une pénurie physique de l'offre pétrolière face à la demande croissante de l'Energie.

- D'autre part, de la nécessité impérieuse de promouvoir dès aujourd'hui le développement d'autres sources d'énergie de substitution au pétrole.

Par ailleurs, sur proposition de la Tunisie, la Xème Conférence Mondiale de l'Energie a accepté que la XIème Conférence qui se tiendra à Munich en 1980 traitera du thème "Les Problèmes de l'Energie dans le Tiers Monde". Pour la préparation de ce thème, un Comité ad hoc présidé par Monsieur Hassen BOUSSOFFARA (Tunisie) s'est réuni le 20 Septembre 1978 à BANFF (Canada) et a recommandé que les Commissions Nationales de l'Energie des Pays en voie de développement définissent leurs politiques énergétiques en relation avec les perspectives de développement économique et social de leurs pays et les transmettent au Comité ad hoc en vue de les intégrer dans le cadre de la stratégie mondiale de l'Energie.

.../...

C'est donc en vue de définir une politique énergétique de la Tunisie à très long terme compte tenu des contraintes extérieures et de contribuer à une meilleure approche d'une Stratégie Energétique tant au niveau des Pays du Tiers Monde qu'au niveau global du Monde, que le Ministère de l'Industrie, des Mines et de l'Energie a constitué une "Commission de la Stratégie de l'Energie" qui a élaboré le présent rapport.

Le présent rapport comprend 2 parties :

PARTIE I. : Rapport préliminaire

1°/ Introduction : Perspectives de l'Energie dans le monde.

2°/ Demande de l'Energie et Projection sur l'an 2000 et 2020.

3°/ Inventaire des ressources énergétiques disponibles et potentielles.

4°/ GAP entre la demande et la production et options de choix pour les énergies de substitution.

5°/ Plan de développement de l'Energie électrique y compris l'utilisation éventuelle de l'Energie nucléaire.

6°/ Promotion de l'Energie Solaire.

7°/ Recommandations Générales sur la stratégie de l'Energie et la conservation et l'économie de l'Energie en Tunisie.

PARTIE II.

Termes de référence pour l'étude du modèle de développement énergétique Tunisien 1980 - 2020.

P A R T I E I.

RAPPORT PRELIMINAIRE

I.- INTRODUCTION : Perspectives de l'Energie dans le Monde

Le Conseil exécutif international de la Conférence Mondiale de l'Energie réuni à BANFF (Canada) du 18 au 20 Septembre a examiné la finalisation du rapport de la Commission de la Conservation de l'Energie et, après de larges discussions, l'a adopté.

Les conclusions d'un tel rapport intéressent les pays développés aussi bien que les pays en voie de développement. Ces conclusions portent sur la demande de l'Energie, la fourniture de l'Energie et la coopération énergétique.

En supposant un taux annuel de croissance économique de 4,2% pour les pays de l'OCDE, 5,7%/an pour les pays en voie de développement, et 3,3% pour les économies planifiées, avec cependant des coefficients d'élasticité des revenus appropriés, la demande serait répartie comme suit ;

38%	pour l'O C D E
32%	pour les pays à économies planifiées
40%	pour les pays en voie de développement.

La projection de la demande mondiale d'énergie à l'horizon 2020 comparée aux prévisions de la production montre clairement que la structure de la fourniture de l'Energie sera profondément modifiée.

Vers 2020 la fourniture annuelle d'énergie primaire pourrait atteindre 1000 Exajoules, soit approximativement le triple de la production actuelle.

La structure de cette fourniture serait schématisée ainsi :

En exajoules

RESSOURCES	1972	1985	2000	2020
- Pétrole	115	216	195	106
- Gaz	46	77	143	125
- Charbon	66	115	170	250
- Nucléaire	2	23	88	314
- Hydraulique	14	24	34	56
- Pétrole et gaz non conventionnels	0	0	4	40
- Solaire, géothermique Biomasse	26	33	56	100
TOTAL :	269	488	690	1000

La production de pétrole atteindra un maximum vers 1990 et déclinera alors de 40% à environ 10% de la Production Totale d'Energie Primaire.

La part du gaz sera limitée à 10 - 15%. Par contre le charbon et le nucléaire s'affirmeront pour 55%. L'hydraulique connaitra une croissance continue mais se maintiendra à un pourcentage à peu près constant de 5%.

Le pétrole et gaz non conventionnels extraits du sable bitumineux et des shistes pétrolifères pourrait participer pour 4% environ.

.../...

L'énergie solaire et la biomasse pourrait contribuer pour 7 à 8% de la production de l'énergie et la géothermie pour 2 à 3%.

L'étude montre en outre que si les pays de l'OCDE seront dépendants sur toute la période, de l'importation du pétrole, il deviendront exportateurs net de charbon après 2007. Par contre les pays en voie de développement qui jouissent d'un potentiel excédentaire jusqu'à l'horizon 2010 commenceront à devenir importateurs net à partir de cette date.

Ainsi la croissance de l'Economie Mondiale au cours de la période allant jusqu'en 2020 nécessite une action précoce pour, d'une part, la conservation de l'énergie et la lutte contre le gaspillage, et d'autre part, un développement vigoureux de tous les genres de production de l'Energie.

Par conséquent, eu égard aux perspectives de la demande croissante de l'énergie il est nécessaire de faire face à cette demande sans délai.

A cette fin, les pays développés sont unanimes pour apporter leur aide à la mise en valeur du potentiel énergétique, renouvelable ou non, des pays en voie de développement.

Cette mise en valeur libèrerait partiellement le pays concerné de la contrainte qu'éxerceront sur le développement économique les importations d'énergie.

En conséquence, les pays industrialisés et les pays en voie de développement ont un intérêt majeur à promouvoir la coopération énergétique pour la Recherche et l'exploitation des sources additionnelles et/ou alternatives d'énergie ainsi que pour son utilisation plus rationnelle, et de permettre un accès plus aisé, à long terme, des pays en voie de développement faiblement producteurs d'énergie au marché énergétique mondial.

.../...

2/ Demande de l'Energie et projection sur l'an 2000 et au delà.

DEMANDE DE PRODUITS PETROLIERS EN TUNISIE A L'HORIZON 2020

L'extrapolation des prévisions de la demande des produits pétroliers établies à l'occasion de l'élaboration du plan Directeur de stockage permet de déduire que la consommation tunisienne serait selon les différents taux de croissance économique comme suit :

10^3 Tonnes

Année / Croissance économique	1980	1985	1990	1995	2000	2010	2020
7 %	3.020	4980	6900	9250	11500	15800	20100
5,9 %	2.600	4030	5360	7400	9400	13800	18100
4,9 %	2.200	3160	3950	5600	7200	11500	16000

3°- Inventaire des Ressources énergétiques disponibles -

La production pétrolière des gisements connue à ce jour, sans tenir compte des indices en cours d'appréciation rencontrés au Golfe d'Hammamet et de Gabès, est la suivante :

ANNEE	Gisements en cours d'exploitation - El Borma - Ashtart - El Itavem - Chouech Saïda - (en M.T.)	
	Production Totale	65 % de la Production revenant à l'Etat
1980	5,53	3,59
1981	5,16	3,35
1982	5,21	3,39
1983	5,01	3,26
1984	4,44	2,89
1985	3,94	2,56
1986	3,63	2,36
1987	3,16	2,05
1988	2,78	1,81
1989	2,66	1,73
1990	2,40	1,56
1991	2,07	1,35
1992	1,84	1,19
1993	0,97	0,63
1994	0,89	0,58
1995	0,85	0,55
1996	0,79	0,51
1997	0,73	0,47
1998	0,68	0,44
1999	0,63	0,41
2000	0,52	0,34
	63,64	35,02

4°- Différence entre la demande et la production d'hydrocarbures et option de choix pour les énergies de substitution

Dans l'hypothèse d'un taux de croissance de 5,9 % le déficit de la production des hydrocarbures des gisements en exploitation par rapport à la demande apparaît dès l'horizon 1983.

10^3 Tonnes

E E	1980	1985	1990	1995	2 000	2 010	2 020
e	2.600	4.030	5.360	7.400	9 400	13.800	18.100
le la tion	3.590	2.560	1.560	550	340		
	+ 990	- 1.470	- 3.800	- 6.850	- 9.060	- 13.800	-18.100

Cependant la mise en exploitation des gisements off-shore en cours d'appréciation et de la Redevance sur le passage du gaz algérien vers l'Italie pourrait faire reculer l'échéance de 1983 à 1988 dans le scénario suivant :

1982 : mise en production de Didon et ISIS
1984 : " " de Byrsa
1985 : " " de Halk El Menzel et Yasmina
1987 : " " de MISKAR

En tout état de cause le déficit de la production pourrait être réduit grâce à :

a) la mise en oeuvre de nouvelles découvertes de gisements d'hydrocarbures

b) la mise en oeuvre de l'énergie nucléaire

c) l'utilisation de l'énergie solaire

d) l'utilisation de l'énergie éolienne

e) la recherche de l'exploitation de gisement éventuel de lignite

f) éventuellement la mise en oeuvre de l'énergie géothermique

5°- Plan de développement de l'Energie Electrique y compris l'utilisation éventuelle de l'Energie Nucléaire -

Les prévisions suivantes de consommation de l'Energie Electrique jusqu'à l'horizon 2 003 sont basées sur l'hypothèse moyenne [illegible] suivante :

I977 - I98I	I5%
I982 - I986	I3,7%
I987 - I99I	8,4%
I992 - I996	6,7%
I997 - 2003	4,8%
I977 - 2003	9,3%

La consommation d'électricité passera de I,33I milliard de kWh en I977 à I2,500 milliards de kWh en 2 003

La puissance appelée passera de 320 MW en I977 à 2.820 MW en 2 003.

La puissance installée passera de 420 MW en I977 à 3.000 MW en 2 000.

Les investissements passeront de 200 MD pour la quinquennie I977 - I98I à 2 000 MD pour I996 - 2 000 aux prix courants

Les coûts correspondant aux conditions économiques de la France en I975 et aux tailles unitaires les plus performantes (900 MW pour le nucléaire, 700 MW pour le thermique - vapeur) sont de:

6 millimes/kWh pour le nucléaire
I0,84 " pour le thermique vapeur

.../...

Compte tenu de la hausse prévisible du prix du pétrole, l'optimisation des ressources conduira probablement la S.T.E.G. à envisager l'inserion d'un réacteur nucléaire dans son programme de Production. L'étude de rentabilité devrait montrer les options à prendre en ce qui concerne la réalisation d'un réacteur national et prendre en considération l'éventualité d'un projet au niveau régional.

LA PENETRATION DU NUCLEAIRE est possible suivant le schéma suivant :

Taille unitaire compétitive	Date de recours au nucléaire	Part du Nucléaire en l'an 2 000	
		Puis.installée	Production
200 - 250 MW	1990	35%	60%
350 - 400 MW	2000	25%	45%
600 - 700 MW	2010	0%	0%

6°)- Promotion de l'Energie Solaire -

Depuis la crise mondiale de l'énergie en 1973 qui a déclenché la hausse importante des prix du pétrole, tous les pays et surtout les pays industrialisés ont décidé de doubler d'effort en matière de recherche de nouvelles sources d'énergie.

C'est ainsi que la technologie d'utilisation de l'énergie solaire connaît actuellement un développement qui lui permettra d'occuper une place croissante pour la satisfaction des besoins énergétiques.

A ce jour les recherches entreprises pour mettre au point des techniques permettant l'utilisation de l'énergie solaire ont permis de substituer l'énergie solaire aux combustibles fossiles, et ce pour le chauffage de l'eau et des locaux.

Pour encourager l'utilisation de cette technologie et économiser les énergies importées les pays industrialisés ont adopté des politiques d'encouragement vis-à-vis des utilisateurs d'installations fonctionnant à l'énergie solaire.

La Tunisie de par l'ensoleillement intense dont elle bénéficie (2.800 à 3.600 heures par an) et de par ses ressources énergétiques d'origine fossiles limitées, se trouve par conséquent motivée pour adopter des ystèmes d'utilisation de l'énergie solaire dont la technologie est mise au point et l'économie est compétitive avec d'autres formes d'énergie .

Afin de favoriser une meilleure intégration en Tunisie des chauffe eau ~~électro~~- solaires et bénéficier convenablement de l'économie apportée par leur utilisation aussi bien au niveau des consommations de fuel et de GPL qu'au niveau du coût de production de l'énergie destinée au chauffage de l'eau, il est souhaitable d'entreprendre d'une façon plus élaborée, les études de marché nécessaires à une meilleure évaluation de la demande d'énergie destinée au chauffage de l'eau ainsi que celle des chauffe eau par type d'utilisation.

Ces études seraient à élaborer en collaboration étroite avec tous les organismes intéressés tels que la Direction de l'Industrie, le S.T.E.G, SACEM, Les Promoteurs immobiliers (S.N.I.T).

A la lumière des résultats de cette étude, un comité ad hoc groupant des représentants des directions de l'énergie et de l'industrie, S.T.E.G, ETAP complos ainsi que les constructeurs potentiels de chauffe eau solaires en Tunisie, arrêterait en accord avec le Ministère de L'Industrie, des Mines et de l'Energie et le Ministère des Finances les mesures nécessaires en matière de subventions à accorder, des dégrèvements fiscaux et des procédures y afférentes.

Un intérêt tout particulier devrait être accordé pour le choix d'un chef de file dans le but de faciliter les modalités de financement des installations solaires à l'instar de celles accordées aux bénéficiaires de chauffe eau électrique ou à gaz.

De telles mesures, une fois arrêtées, devraient être accompagnées d'un timing de réalisations et de conversions éventuelle des chauffe eau électriques et même à gaz actuellement existants afin que la Tunisie puisse bénéficier dans les plus brefs délais d'une meilleure utilisation de ses ressources énergétiques et de ce fait du maximum d'économie en devises.

A titre d'information :

- La consommation annuelle d'électricité et de gaz pour le chauffage, des locaux, le chauffage de l'eau sanitaire et le pompage est évaluée à 40.000 T. E.P.

- La consommation annuelle de fuel domestique est de l'ordre de 40.000T pour le chauffage des locaux.

7°/ Recommandations Générales sur la Stratégie de l'Energie et la Conservation de l'Energie en Tunisie

7.I. Stratégie de l'Energie

La Sous-Commission recommande qu'une étude du modèle de développement énergétique tunisien soit entreprise jusqu'à l'horizon 2 020.

Cette étude répond au triple objectif :

a) objectif national : Exploitation optimale des ressources nationales et actions à entreprendre pour y faire face

b) objectif de coordination des stratégies énergétiques des Pays en voie de Développement

Cette coordination sera assurée par le Comité ad hoc créé par la Conférence Mondiale de l'Energie.

c) objectif international : Aider à l'élaboration d'une Stratégie Mondiale de l'Energie au service du Nouvel Ordre Economique International.

D'ores et déjà la Sous-Commission recommande que sur le Plan National les actions suivantes soient entreprises, sans préjudice des conclusions de l'étude du modèle Energétique :

1) Poursuivre l'intensification de la Recherche pétrolière
2) Etudier le potentiel hydro-électrique de la Tunisie
3) Poursuivre l'examen des possibilités de l'extraction de l'uranium des phosphates.
4) Poursuivre la Recherche du lignite, et de l'Energie géothermique
5) Promouvoir l'utilisation de l'Energie Solaire et l'énergie éolienne
6) Se préparer pour l'insertion de l'énergie nucléaire dans le Plan de développement de l'Energie Electrique

7.2. Conservation optimale de l'Energie

Les conclusions de la Conférence Mondiale de l'Energie d'Istanbul en 1977 a montré à l'évidence que l'homme, d'ici la fin du siècle, doit envisager une diminution très accélérée et considérable des ressources pétrolières.

L'ajournement de la date critique du déclin de l'ère pétrolière jusqu'en 1990 dépend dans une large mesure, de la conservation optimale de l'Energie.

Les méthodes les plus efficaces d'optimisation de l'utilisation de l'énergie ont fait l'objet des recommandations suivantes :

1) Provoquer l'intérêt de tous pour une meilleure utilisation de l'Energie, par la publicité, l'information, les conseils et l'éducation. Encourager un style de vie plus économe.

2) Création de stimulants fiscaux encourageant une fixation correcte des prix des combustibles et de l'énergie

3) Réglements et normes concernant tous les appareils consommant de l'Energie, telles que les normes d'économies en ce qui concerne les véhicules, les vitesses maxima, les limitations de l'éclairage, du chauffage, de l'air conditionné, et les normes d'isolation des bâtiments.

- P A R T I E II -

TERMES DE REFERENCE DE L'ETABLISSEMENT DU MODELE ENERGETIQUE TUNISIEN

I. OBJECTIFS DE L'ETUDE

1) Déterminer, compte tenu de différents scénarios de développement économique du pays, quels seraient les besoins de l'économie tunisienne en produits énergétiques jusqu'à l'horizon 2020 et en distinguant 1 ou plusieurs horizons intermédiaires.

2) Déterminer quelles sont les quantités de produits énergétiques non substituables et celles qui pourraient donner lieu à des choix d'ordre stratégique.

3) Définir des options de choix entre les différentes stratégies possibles et déterminer, compte tenu des hypothèses de développement envisagées, la stratégie optimale.

II. CONTENU DE L'ETUDE

1) L'étude doit commencer par évaluer les besoins en énergie primaire, compte tenu d'hypothèses de développement économique à expliciter. Ces besoins comprendront aussi bien les besoins en combustibles que les besoins en produits énergétiques utilisés comme matière première dans les différents secteurs.

2) Ces besoins en énergie primaire devront être ventilés suivant les différents secteurs utilisateurs.

3) Une analyse devra être faite par secteur pour déterminer sous quelle(s) forme(s) d'énergie secondaire ces besoins en énergie primaire pouvant être couverts.

.../...

4) Les différents choix économiques entre les diverses ressources d'énergie primaire accessibles pour satisfaire la demande en énergie secondaire, devront être examinées, et les différents paramètres techniques, économiques et financiers de conversion devront être déterminés.

5) Un inventaire sur l'ensemble de la période envisagée des différentes ressources d'énergie primaire nationales devra être établi.

6) Compte tenu à la fois des possibilités de substitution ou non d'une énergie à une autre, des ressources inventoriées et des différents paramètres de conversion, déterminer les différentes stratégies possibles et dégager parmi elles celle qui correspond à l'optimum économique.

7) Analyser ce que cette stratégie implique sur le plan des décisions à prendre, et notamment les décisions d'investissements.

III. METHODOLOGIE DE L'ETUDE

1) Il convient de confectionner un ou plusieurs modèles mathématiques pour répondre à toutes les questions posées ci-dessus. Ces modèles doivent être dynamiques en vue d'étudier l'enchainement des décisions et de leurs effets.

2) Les prix internationaux des différentes formes d'énergie ainsi que leur évolution doivent servir de base pour la définition de la stratégie optimale de couverture des besoins énergétiques du pays. En outre une analyse des prix intérieurs devra être faite en vue de faire ressortir leurs incohérences éventuelles et de proposer des solutions ainsi que des recommandations pour les faire évoluer dans le sens d'une plus grande cohérence interne et externe (avec les prix internationaux).

.../...

3) Des calculs de sensibilité devront être faits pour faire apparaître quels sont les paramètres-clefs du système, c'est à dire les paramètres dont la variation engendre les plus grands changements sur la stratégie optimale.

4) Les problèmes de conservation de l'énergie et de lutte contre le gaspillage doivent également être examinés et inclus dans l'étude.

SCMC
IDC.

RCM/AL
20.5.78

LE MARCHE DE L'ELECTRICITE

à moyen et long terme

GRAPHIQUE N° 1

RETROSPECTIVES GLOBALES 1966-1976

EVOLUTION EN GWh

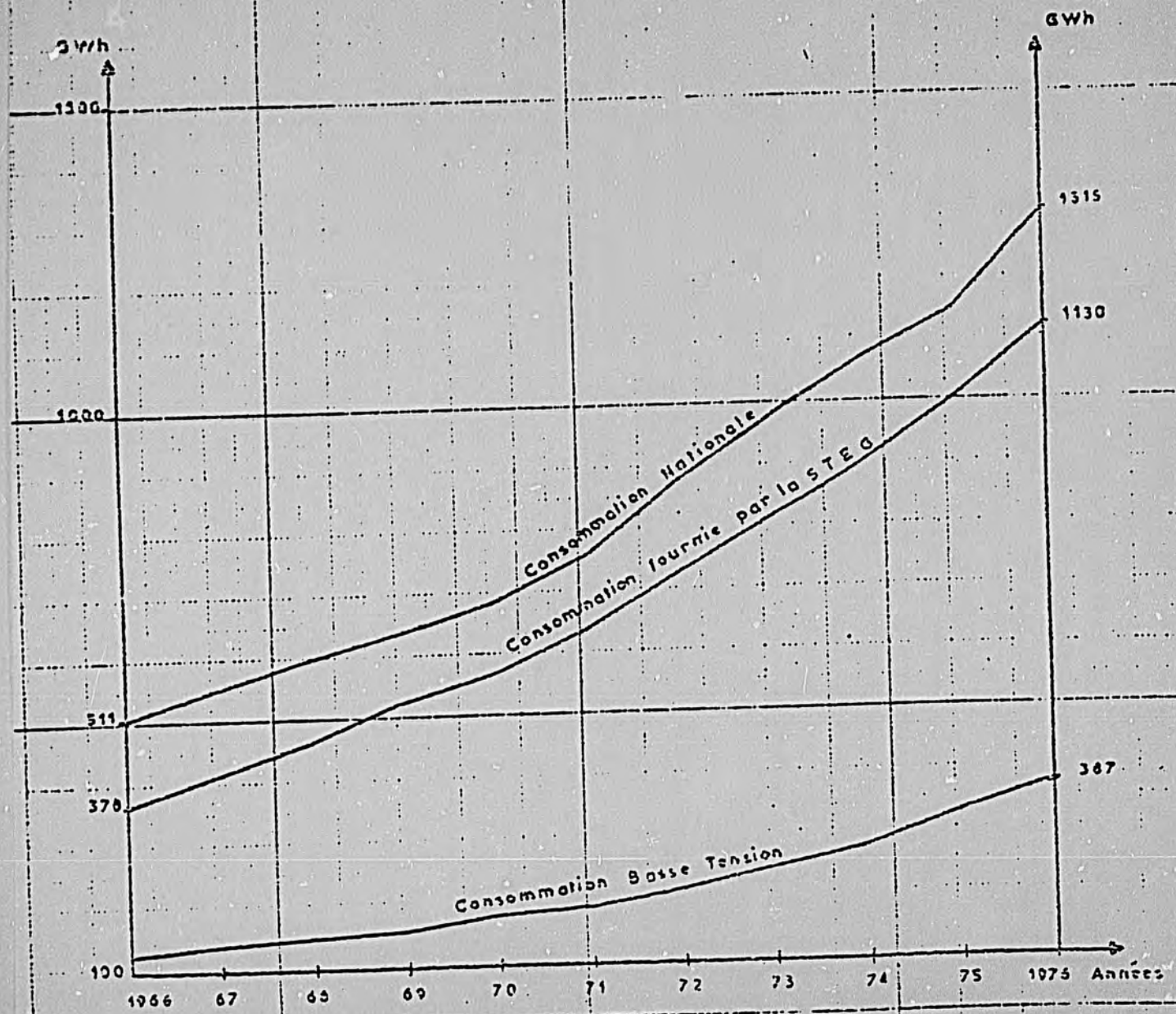

GRAPHIQUE N° 5

HYPOTHESES RETENUES POUR LA PREVISION DE CONSOMMATION D'ELECTRICITE FOURNIE PAR LA STEG

1977 _ 2003

Périodes	1977_1981	1982_1986	1987_1991	1992_1996	1997_2003	1977_2003
Hypothèse Forte	15 %	13.7 %	10.6 %	7.8 %	5.2 %	10 %
Hypothèse Moyenne	15 %	13.7 %	8.4 %	6.7 %	4.6 %	9.3 %
Hypothèse Faible	15 %	11.7 %	7.0 %	5.5 %	4.7 %	8.6 %

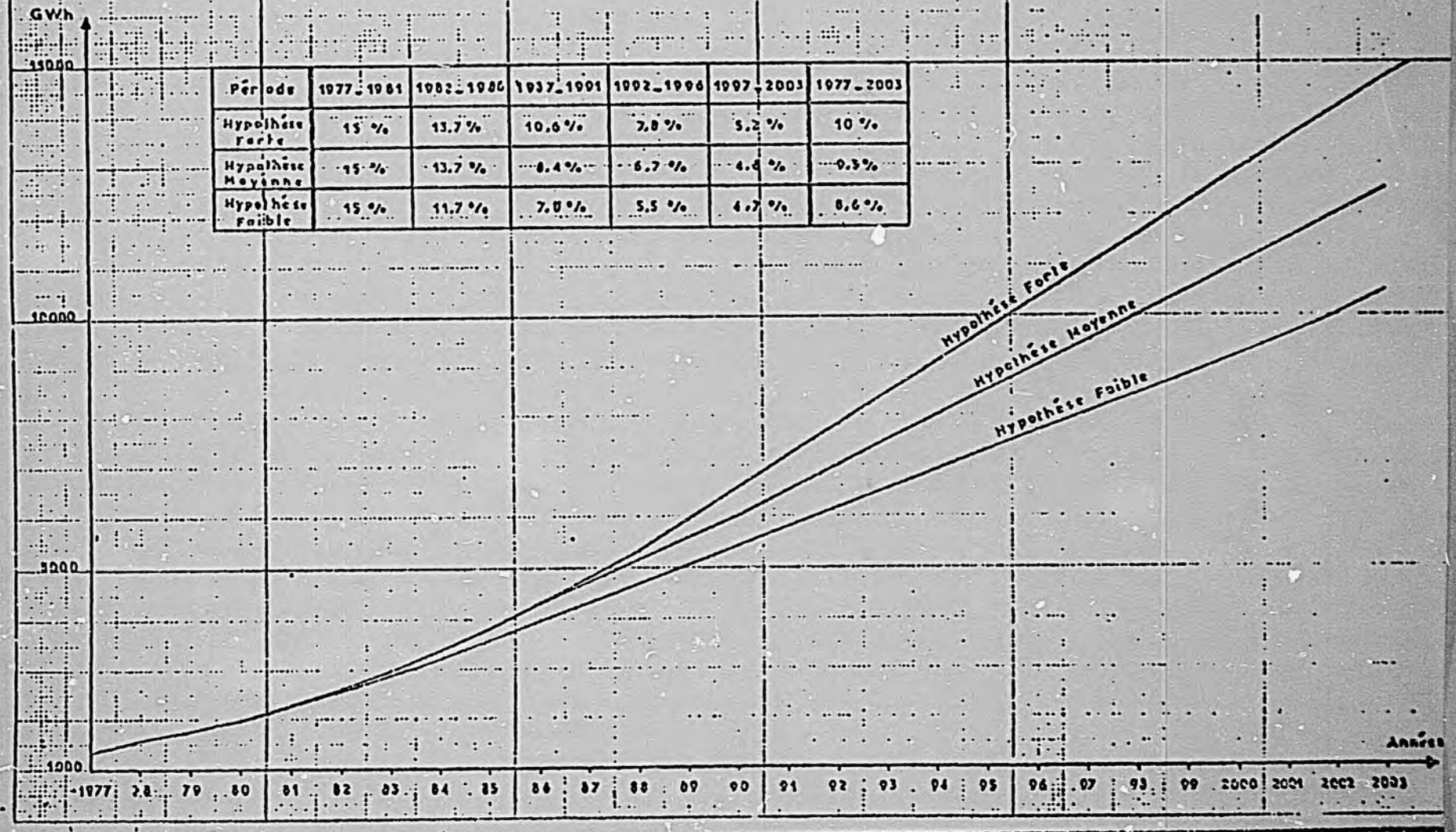

TABLEAU N°5

Hypothèses retenues pour la prévision
de consommation d'électricité fournie par la STEG
(GWh)
1977 - 2003

Année	Hypothèse faible	Hypothèse moyenne	Hypothèse forte
1977	1331	1331	1331
1978	1570	1570	1570
1979	1750	1750	1750
1980	1990	1990	1990
1981	2280	2280	2280
1982	2570	2590	2590
1983	2870	2980	2980
1984	3200	3390	3390
1985	3550	3820	3820
1986	3970	4340	4340
1987	4300	4700	4800
1988	4800	5100	5300
1989	5000	5600	6000
1990	5300	6000	6500
1991	5800	6500	7200
1992	6200	7000	7800
1993	6500	7500	8500
1994	7000	8000	9000
1995	7300	8500	9500
1996	7600	9000	10500
1997	8000	9500	11000
1998	8500	10000	11700
1999	9000	10500	12500
2000	9200	11000	13000
2001	9500	11500	13500
2002	10000	12000	14000
2003	10500	12500	15000

. : Les chiffres de l'année 1977 sont réels.

TABLEAU N°9

PREVISION DE LA PUISSANCE MAXIMUM APPELEE

SUR LE RESEAU STEG (MW)

1977-2003

Année	Hypothèse faible	Hypothèse moyenne	Hypothèse forte
1977	320	320	320
1978	370	370	370
1979	420	420	420
1980	470	470	470
1981	540	540	540
1982	600	600	600
1983	670	700	700
1984	750	790	790
1985	830	890	890
1986	930	1020	1020
1987	990	1080	1100
1988	1100	1170	1220
1989	1150	1280	1380
1990	1220	1380	1500
1991	1330	1490	1660
1992	1410	1600	1780
1993	1480	1710	1940
1994	1600	1820	2050
1995	1660	1940	2170
1996	1730	2050	2400
1997	1800	2140	2480
1998	1920	2260	2640
1999	2020	2[illegible]0	2820
2000	2050	2480	2920
2001	2140	2580	3040
2002	2260	2700	3160
2003	2360	2820	3380

NB. : les chiffres de l'année 1977 sont réels.

ENVIRONNEMENT DU MARCHE DE L'ELECTRICITE

DE LA CEYCO

1 - PUISSANCE INSTALLEE

ANNEE	1977	1985	1990	1995	2000
P.I. (MW)	400	1100	1750	2400	3000

2 - ACCROISSEMENTS (toutes activités électriques)

PERIODE	1977-1981	1982-1986	1987-1991	1992-1996	1996-2001
MD courants	210	400	[illegible]	1 400	2 000

3 - PENETRATION DU NUCLEAIRE

Taille unitaire compétitive	date de recours au nucléaire	Part du nucléaire en l'an 2000	
		Puiss.installée	Production
200 - 250 MW	1950	35%	60%
350 - 400 MW	2000	25%	45%
600 - 700 MW	2010	0%	0%

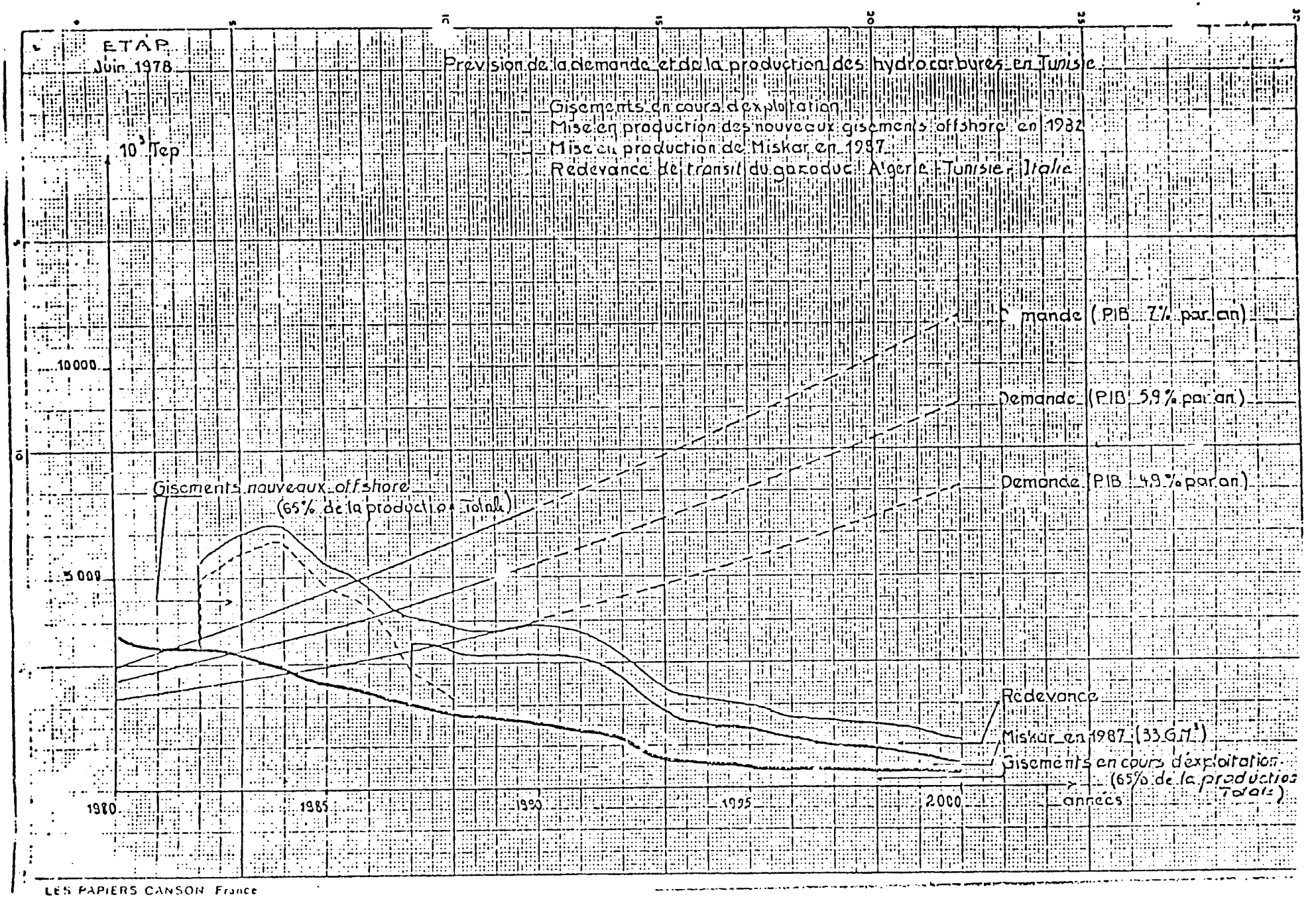

LES PAPIERS CANSON France

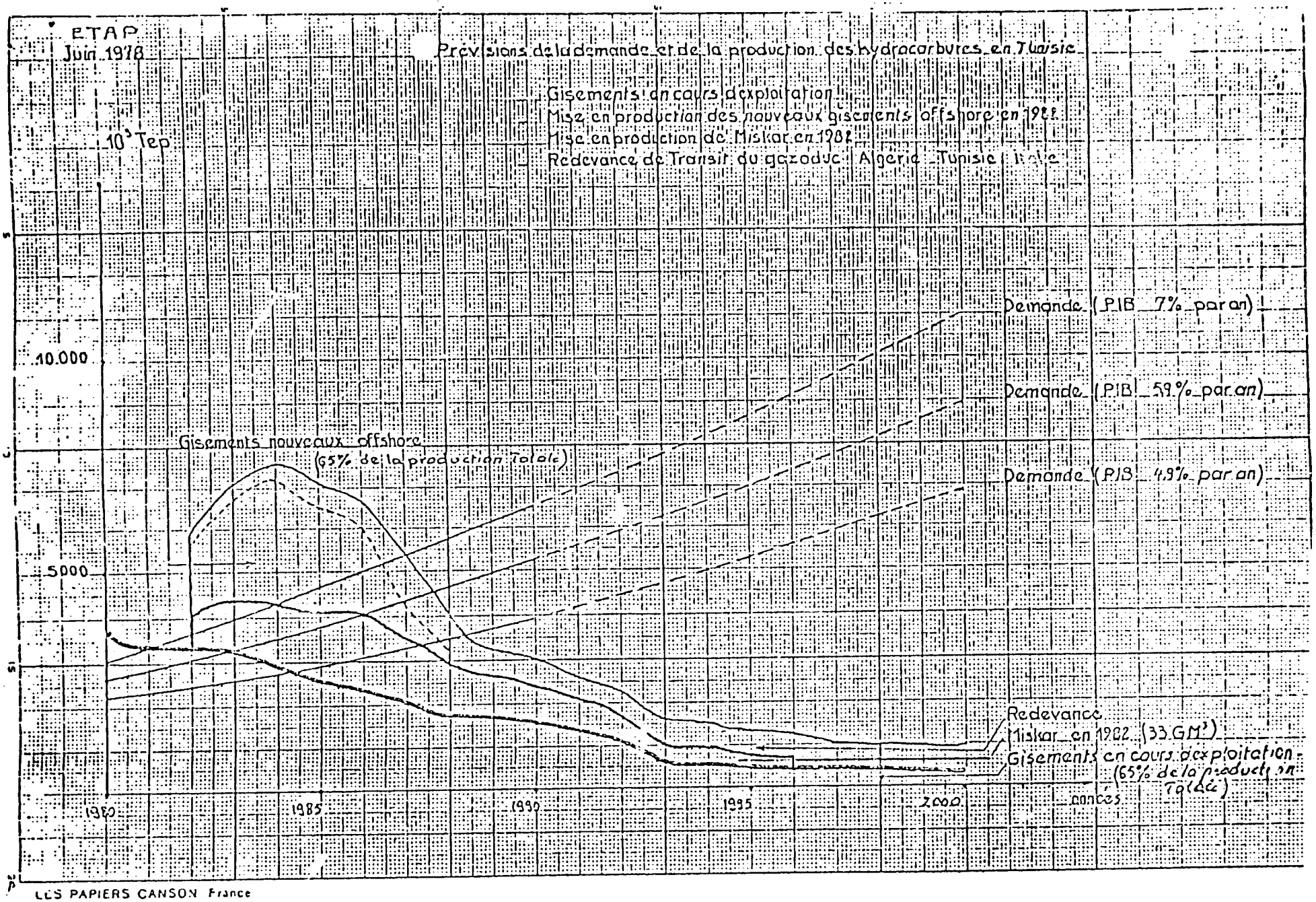

LES PAPIERS CANSON France

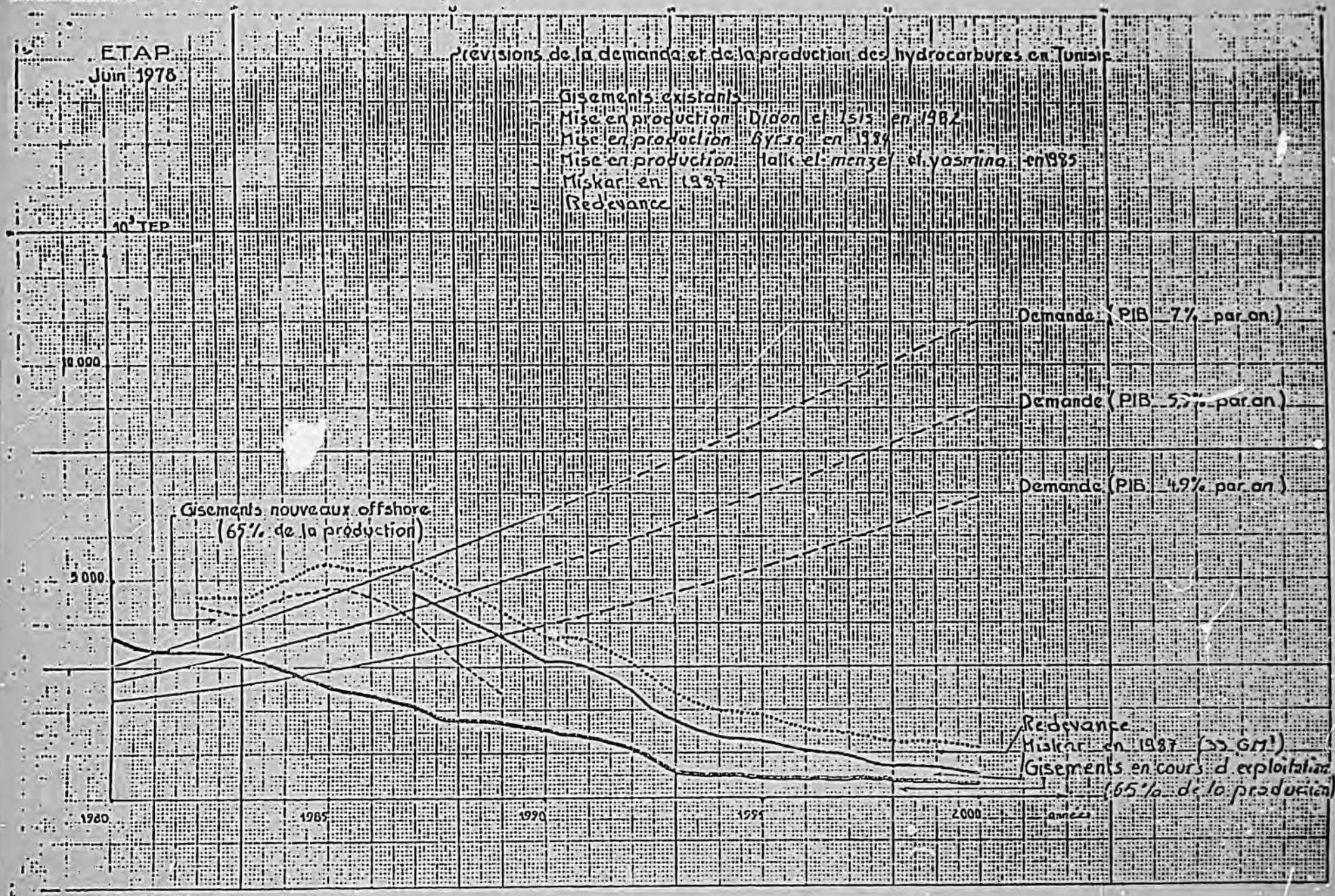

PAPIERS CANSON France

PREVISION DE LA PRODUCTION TUNISIENNE EN HYDROCARBURES

Millions de Tep

Années	Gisements en cours d'Exploitation 65%Prod. Totale	Miskar 33GM3	Gisements nouveaux off-shore * 65%Prod.Tot	Redevance	Total
1980	3,59				3,59
1981	3,35				3,35
1982	3,39	0,7	1,63	0,2	5,92
1983	3,26	1,12	2,28	0,37	7,03
1984	2,89	1,40	2,93	0,42	7,64
1985	2,56	1,59	2,28	0,61	7,04
1986	2,36	1,68	1,95	0,61	6,60
1987	2,05	1,40	0,65	0,61	4,71
1988	1,81	1,17	0,33	0,61	3,92
1989	1,73	0,93		0,61	3,27
1990	1,56	0,79		0,61	2,96
1991	1,35	0,61		0,61	2,57
1992	1,19	0,51		0,61	2,31
1993	0,63	0,37		0,61	1,61
1994	0,58	0,37		0,61	1,56
1995	0,55	0,19		0,61	1,35
1996	0,51	0,19		0,61	1,31
1997	0,47			0,61	1,08
1998	0,44			0,61	1,05
1999	0,41			0,61	1,02
2000	0,34			0,61	0,95
TOTAL	35,02	13,02	12,05	10,75	70,84

* Mise en production de tous les gisements en 1982

PREVISION DE LA PRODUCTION TUNISIENNE EN HYDROCARBURES

Millions de Tep

nées	Gisements en cours d'Exploitation 65%Prod. Totale	Misker 33MG3	Gisements nouveaux off-shore 65%Prod.T*	Redevance	Total
978					
979					
980	3,59				3,59
981	3,35				3,35
982	3,39		1,63	0,2	5,22
983	3,26		2,28	0,37	5,91
984	2,89		2,93	0,42	6,24
985	2,56		2,28	0,61	5,45
986	2,36		1,95	0,61	4,92
987	2,05	0,7	0,65	0,61	4,01
988	1,81	1,12	0,33	0,61	3,87
989	1,73	1,40	[illegible]	0,61	3,74
990	1,56	1,59		0,61	3,76
991	1,35	1,68		0,61	3,64
992	1,19	1,40		0,61	3,20
1993	0,63	1,17		0,61	2,41
1994	0,58	0,93		0,61	2,12
1995	0,55	0,79		0,61	1,95
1996	0,51	0,61		0,61	1,73
1997	0,47	0,51		0,61	1,59
1998	0,44	0,37		0,61	1,42
1999	0,41	0,37		0,61	1,39
2000	0,34	0,19		0,61	1,14
TOTAL	35,02	12,83	12,05	10,75	70,65

* Mise en Production de tous les gisements en 1982.

COMMISSION NATIONALE DE LA STRATEGIE DE L'ENERGIE JUSQU'A L'HORIZON 2020

MM.-	- Hassen BOUSSOFFARA	: Chef du Cabinet de Monsieur le Ministre de l'Industrie, des Mines & de l'Energie
	- Mekki ZIDI	: Président Directeur Général de l'Office National des Mines
	- Amor ROURGU	: Président Directeur Général de l'E.T.A.P.
	- Mohamed Ali BEN YOUSSEF	: Directeur S.E.P.A.
	- Mokhtar LATIRI	: Président Directeur Général de la S.T.E.G.
	- Khelifa KAROUI	: Directeur de l'Energie
	- Mustapha DELLAGI	: Président Directeur Général de la SITEP
	- Ahmed BEN KHELIFA	: Président Directeur Général de la S.E.I.R.
	- Sadok BAHROUN	: Président Directeur Général du C.N.E.I.
	- Mahmoud LADJIMI	: Président Directeur Général de la S.E.P.P.
	- Belgacem MEZNI	: Directeur à L'E.T.A.P.
	- Sadok RABAH	: Directeur à la S.T.E.G.
	- Kemal REKIK	: Directeur à la S.T.E.G.
	- Mohamed DAYA	: Président Directeur Général de la S.I.C.C.
Mme	- Jaouida AMMABI	: Président Directeur Général de AMMASOI
MM	- Rachid AZOUZ	: Ingénieur-Conseil - COMPLES -

P 100

REFERENCES

1. Agribusness Council, INC. TUNISIA , September 1978.
2. Tunisian Economic Position and Prospects for TUNISIA, Review the FIFTH Development PLAN, 1977-1981 World Bank Report No 1539-TUN, May 2, 1977.
3. TUNISIA ENERGY STUDY A cooperative Program in Alternative Energy Resources and Technologies Development Sciences INC Oct 1978
4. TUNISIA RENEWABLE ENERGY PROJECT Final Report, (contract AID/DSAN) Development Sciences, Inc, March, 1979.
5. "Aperçu sur la Strategie de l'Energie de la Tunisie" Ministry of Industry, Energy and Mines Rep. of Tunisia
6. Agricultural Development in Central Tunisia, USAID Contract AID/afr-c-1139, July 1978,
7. An Aisessment of the Agricultural Potential of Central Tunisia, USAID contract AID/afr-c-1139, April 1978.
8. Small holder Irrigation Development, USAID Project Paper 664-0312,3.
9. Irrigation à partir de Puits de surface, Secretariat d'Etat au Plan et à l'Economie Rationale, Rep. of Tunisia.
10. Small Program Statement for Tunisia, USAID/Tunisia, Junary 1979.
11. Annuel Budjet Submission FY 1981 for Tunisia, USAID/Tunisia, May, 1979.