Evaluation

PD-AAF-401

931a:54

14p

(For file or destroy)

MICHIGAN STATE UNIVERSITY EAST LANSING · MICHIGAN 48823

DEPARTMENT OF AGRICULTURAL ECONOMICS · AGRICULTURE HALL

MEMORANDUM

TO: All MSU Project Evaluators

FROM: The MSU Sector Analysis and Simulation Team

SUBJECT: The Evaluation

DATE: January 21, 1974

The MSU team is concerned that the project evaluators understand the administrative relationships and operational environment within which the MSU Agricultural Sector Analysis and Simulation Project has performed over the past two and one half years. It is to that end that this memo is addressed.

The Agricultural Sector Analysis and Simulation activity at MSU is a project administratively under the Department of Agricultural Economics and through which the resources and personnel have been mobilized to carry out the activities and objectives of the AID/MSU contracts as described below. The core source of funding for the project is Contract AID/Csd-2975 which began in June 1971 and followed the successful completion of Contract AID/Csd-1557. Contract AID/Csd-2975 is funded and monitored by the Technical Assistance Bureau, AID/W. The objectives under this contract are attached as Appendix A.

As part of the decision to carry-on Korean activities under AID/EAD-2975, another contract AID/EAD-184 was negotiated with the Asia Bureau AID/W and the USAID/Korea Mission. AID/EAD-184 was funded from Mission sources and is monitored by the Mission. This contract had a different set of objectives from those to be carried out under AID/Csd-2975 as can be seen in Appendix B. Contract AID/EAD-184 required the MSU team to (1) produce a broad comprehensive agricultural sector analysis report within seven (7) months after arrival of the first regular staff in Korea, (2) to produce an investment priorities study report within twelve (12) months, and (3) in the longer range, to improve and develop program evaluation, analytical program development, and policy formulation capabilities of the Ministry of Agriculture and Fisheries, ROK. Though simulation is not an integral part of AID/EAD 184, that contract was fulfillable within the time and cost constraints of AID/EAD 184 only through the use of computers guided systematically by models involving the use of simple (even crude) components and a wide variety of information from many sources and of varying quality.

Evaluators should recognize that Contract AID/Csd-2975 activities and objectives in Korea are only part of the Korean project since activities and objectives under Contract AID/EAD-184 were also involved. Evaluators should further note that the Contract AID/Csd-2975 portion of the Korean project

is in turn only a part of the activities under this contract. Major additional activities include those carried out at MSU on the software library and on the training program. In addition, work has been carried out under AID/Csd-2975 for Nigeria and Colombia. Further, project personnel have consulted and participated in meetings, seminars, and conferences with a number of international, foreign country, and domestic agencies and institutions.

Chapter 4 of the Korean Agricultural Sector Analysis Report spells out the Korean project (KASS) approach, while the attached Appendix C indicates the definition of system simulation which is integral to both the contract and the project. The extremely strict time pressures and cost constraints imposed by both AID and the Korean government on fulfilling the objectives of contract AID/EAD-184 had, for the most part, positive consequences. The KASS team viewed the activities under Contracts 184 and 2975 in Korea as highly complementary and operated from the beginning of the KASS project with an intent to fully capitalize upon those complementarities. The normative and qualitative non-normative information collected by the short term personnel under Contract 184 was extremely useful in conceptualizing the simulation model components for the Korean Agricultural Sector under Contract 2975. Conversely the conceptualization of the model on the basis of AID/Csd 2975 work was useful in determining the hard data and information to require short term personnel to collect under contract 184. Contract 184 personnel were able to spend more of their valuable time in collecting data and information and in doing qualitative analysis since the required projections were made with computers rather than by short termers using paper and pencil and desk calculator. The time pressures and costs constraints imposed on 2975 to support Contract 184 objectives and be crude but balanced in such a way as to provide the broad array of results necessary to staisfy Contract 184 objectives. Individual components had to be such that the marginal returns be dollar, and time unit spent in refining them were equal among components; to permit great refinement of components based on special techniques at the cost of neglecting more important crudities would have been inefficient.

Since completion of the contract 184 objectives at the end of the first year of the Korean project a substantial amount of personnel time and resources have gone into, (1) improving existing model components, (2) making the model more user-oriented and, (3) building new components. In addition a substantial amount of effort has gone into concentrated training of Korean personnel in the systems approach and the use of simulation techniques. These activities received relatively less priority during the first year because of the time pressures imposed upon the activities under contract 184. This concentrated training effort is making heavy use of the training program and software library components of contract 2975 at MSU.

The MSU team feels that a complete and comprehensive evaluation cannot be made of either AID/Csd-2975 or AID/EAD-184 without taking the activities of the total project into consideration since the various activities carried out under both contracts and in East Lansing and in other parts of the world as well as Korea have complemented or competed in such a way that no distinct clear-cut, evaluative lines can be drawn around single activities or subsets of activities to view them as totally separate entities. We urge each evaluator to maintain a broad perspective and to attempt to understand how the individual project pieces for which each evaluator is responsible fits into the totality of the project as constrained by the time and cost limits of the relevant contracts. Only seven months were available and the budget was modest, yet results were produced on time and within the budget.

APPENDIX A

SCOPE OF WORK

ADOPTING AND TESTING OF AGRICULTURAL SIMULATION MODEL TO SECTOR ANALYSIS

I. General Statement of Work

The basic objective of this project is to test, apply, and further develop, under field conditions, the simulation model (and components) developed under Contract AID/csd-1557 with the end in view of increasing the usefulness and lowering the cost of policy, program and project development and evaluation.

II. Specific Statement of Work

A. Test, adapt, extend, and use the computer simulation model developed under AID/csd-1557 in the context of Nigeria or other country in designing, developing, and evaluating selected policies, programs and projects. This will be done with host country, third country and international agencies as opportunities and needs arise and as mutually agreed to by TAD/AID/W and the Contractor. In accomplishing this objective, emphasis will be placed on first establishing linkages with indigenous institutions and second on establishing their capacity to use computerized simulation models to design, analyze, and evaluate their own policies, programs and projects. Some preliminary discussions have been held with Bureau and Mission personnel on operationalizing the total model in Nigeria, Korea, and Indonesia. There are numerous country locations where not more than two components of the simu-

lation model could be applied such as the tree crop component (West Africa, Indonesia, Thailand), livestock component (Colombia, Brazil, Philippines), annual crop component on rice or wheat (Philippines, Pakistan, Korea).

B. Test, adapt, extend and use the computer simulation model developed under AID/csd-1557 in designing, developing, analyzing and studying, and/or in evaluation selected programs and projects for AID/W and/or USAID Missions in countries mutually selected by AID/W and the Contractor. Here again strong emphasis will be placed on developing institutional linkages between U.S. agencies and U.S. universities to increase capacity to design, analyze and evaluate policies, programs and projects. The possible country situations are numerous, but consideration might be given to Thailand, Brazil, Colombia and East Africa.

C. Establish a software library, initially at MSU, but perhaps to be transferred later to the proposed IDI of A.I.D. The various mathetical models and computational routines referred to here as "software" should be placed in one or more of the standard computer languages indexed and made available to "borrowers" with appropriate explanations. This will involve generalization of existing components and the provision of a higher order simulation language for the integration and combination of components into configurations required in various institutional and geographic contexts. Such an arrangement is needed to make the model components available on a national and international basis to potential users in donor, lender, and host country agencies.

D. Further develop the computer simulation model on the basis of experience in using it under field conditions. A number of extensions and modifications may be needed. These may include the incorporation of PERT (critical path analysis), the incorporation of further development in the theory of

investment and disinvestment as related to supply responses and the solution of certain aggregation problems, the incorporation of PPBS (Planning, Programming, and Budgeting Systems) and PERT techniques, and the use of various decision rules in estimating entrepreneurial and consumer behavior.

E. Train personnel from host country, donor, and lender agencies in the use, adaptation and further development of computer simulation models. Initially this will be done concommittantly with and as part of attaining objectives (A), (B), and (C) and as part of the Contractor's regular educational program. This training activity will be important in establishing the international and national linkages and capacities to use computer simulations in designing, analyzing and evaluating developmental policies, programs, and projects. Special training programs at either off-campus or on-campus locations are envisioned. This project (1) holds real promise in enhancing the state of the art in sector planning and (2) is one important component of a program that meets the high priority assigned to sector planning. The need is to move in-depth in the evaluation of policy program and project alternatives. The critical need is to expand micro type analyses, to aggregate the micro possibilities, to focus on interdependencies between micro and macro elements and to structure the transferability of such an approach.

This project relates directly to the key problem areas of sector analysis and agricultural economics capability, rural/urban transfer systems and a worldwide agricultural research network. It was constructed on "the building block" principle. Thus, it has components for annual cash crops, annual food

crops, perennial export tree crops, and livestock. Further, it deals with agricultural research, extension and education, transportation, interregional domestic trade, export earnings, population, domestic consumption, taxation, foreign trade and provides for transactions between the farm and, in a rudimentary way, the non-farm sector. In turn, each of these components is constructed of sub-components. For example, essentially the same demographic sub-component is used for modeling the people, cattle, palm tree, cocoa tree and rubber tree populations. It is this building block characteristic of the MSU agricultural sector model which makes it and its components flexible and adaptable to a wide variety of circumstances, i.e., in different countries and at policy, program and project levels.

CONTRACT BETWEEN THE UNITED STATES OF AMERICA AND

MICHIGAN STATE UNIVERSITY

APPENDIX B - OPERATIONAL PLAN

I. Scope of Technical Services

A. Objectives for which Technical Services Are to be Used

1. To provide the ROKG and AID with a comprehensive study and analysis of the components comprising the agricultural sector, including the Ministry of Agriculture and Forestry (MAF) and related government organizations, and recommendations relative to those policy, program, investment, organizational and other changes necessary to attain and sustain a given agriculture sector growth rate.

2. To make a preliminary identification of priority investment areas and to improve the investment knowledge base available to the Korean Government, international organizations, donor countries, and USAID, in order that they can make wiser agricultural sector development investment decisions.

3. A longer range objective is to improve and develop the program evaluation, analytical, program development, and policy formulation capabilities of the MAF.

Within the framework of the scope of technical services described herein and in particular during the simulation model adaptation phase, the Contractor shall inform, teach and provide Korean counterpart personnel with the necessary experience so that MAF will be capable of continuing the analysis of the sector over a period of time and improving its capability to service Korean agriculture more efficiently.

BEST AVAILABLE COPY

B. General

The contractor as a function of carrying out the analysis of the Korean agricultural sector will complete a written descriptive sector study within a time frame of nine months from the initiation of the contract. It is expected that during a total period of not more than 24 months a simulation model will be adapted to the analysis of the sector. The project will be carried out in distinct phases, the first of which is represented by the nine-month descriptive sector study and the second by a three-month more detailed analysis and documentation of potential agricultural investment areas and policy recommendations. The third phase of the project is represented by the adaptation of the simulation model to the sector data.

The Contractor agrees to use its best efforts to perform the following scope of work which shall include but not be limited to the following items:

1. Define and describe the parameters of the agricultural sector giving the rationale for the selection.

2. Identify, describe, analyze and evaluate the physical resources comprising the agricultural sector giving the magnitude of the more important resources and their significance to the development of Korean agriculture.

3. Define and describe the components comprising the production and marketing infrastructure (including the private sector and agri-business activities), the government infrastructure affecting the production, marketing and consumption of agricultural products, the political implications of the government infrastructure and the administrative machinery utilized by government to develop, execute, and evaluate agricultural policies and programs.

4. Describe, analyze and evaluate national agricultural development and production goals, the political ramifications of these goals and the likelihood of the governments' and sectors' capability of attaining both short and long run operational and planning goals.

5. Identify, describe and analyze the elements or subsectors inhibiting the growth of the sector, including policies, government regulations, customs, programs, capital availability and allocation, institutions and other factors.

6. Define, describe, measure, and analyze the interaction between the urban and rural sectors for performance variables such as labor efficiency, population migration, income distribution, and manpower utilization.

7. Analyze both micro and macro agricultural input/output relationships given specific government policies and programs.

8. Identify those elements or subsectors which require further investment to optimize the development of the agricultural sector, giving the priority sequence and time frame in which these investments should be made, the magnitude of this investment schedule, the most feasible sources of investment funds and the rationale for selecting investment areas, given selected price, program, and policy alternatives.

9. Identify, analyze and evaluate production and marketing research activities and programs in order to project the research, technological, and human resource requirements necessary for optimizing the growth of the sector, given selected assumptions.

10. Describe, analyze and evaluate the organizational structure of the MAF and pertinent related agencies, in particular the National Agricultural Cooperative Federation (NACF); recommend the organizational structures and human resource requirements required to adequately carry out current and proposed policies and programs.

11. Project budgetary and other government resource requirements, balance of payments, aggregate production, output efficiency and other performance and evaluation parameters, using selected policy and program alternatives.

12. Train Korean counterpart personnel in the techniques, methodology and analytical procedures used throughout the study and document these techniques, methodology and analytical procedures in such a manner that a continuing analysis of the sector can be carried out with a minimum of outside assistance upon the completion of this contract.

The sector study shall indicate the probable effect at two selected points in time of three alternative packages of policies, projects or programs in these and other areas as measured by performance variables including but not limited to: (a) per capita income; (b) output of crop and livestock products; (c) value added; (d) farm income by crop or subregion; (e) foreign exchange and tax revenues generated by agriculture; (f) per capita caloric and protein consumption levels; and (g) employment generated by agriculture.

A step beyond the descriptive sector study will be the adaption of a simulation model for Korean agriculture to be jointly funded by USAID/Korea and the Technical Assistance Bureau of AID/W.(TAB).

Involved will be the further development, testing, adapting, extending and using the computer simulation model developed under contract AID/csd-1557. The investigations and analyses carried out in performing the sector study will provide much of the information and groundwork for the adaptation of the model and will facilitate and speed this operation. By utilizing the complete model, estimates of the results of alternative policies, inputs, etc. will be more readily available for decision-making purposes.

In all phases of work the contract team members will work closely with Koreans to train them in the analytic processes and computer techniques utilized and also to gain from them insights into the sector. Participant training in identified areas to enable Korea to effectively, utilize the model will be provided through Mission direct funding or TAB channels and will not be included in this contract.

APPENDIX C

DEFINITION OF SIMULATION AND SYSTEMS APPROACH

Extracted from Project Proposal for Extension of Contract AID/csd-2975, Agricultural Systems Simulation Project.

To place the rest of this proposal in perspective a definition of simulation as it is used in this project is in order. Simply stated, simulation is the tracking or projection of a variable or set of variables over time, under different assumed conditions some of which are and some of which are not controlled by man. An eyeballed line through a scatter diagram on graph paper, using a ruler and pencil, is a simulation if the line projects in time beyond the known data. A regression equation can provide a bit more sophisticated simulation. Models based on one or more specialized techniques such as input-output, linear programming, simultaneous equations[1/] are more complex but not basically different. They provide the analyst with tools for testing the consequences of alternative assumptions--i.e., simulations--in a specialized sense often through optimizing a single objective function and often using specialized sources of data.

This project uses the generalized, computerized systems simulation approach. Theory and techniques from many disciplines are used to build models in a systems context, the system modeled being defined in such a way as to include the problem being addressed. Such specialized theories and techniques are used where appropriate to build components of the overall model. Specialized components are linked to each other in the model just as the real components which they represent are linked in the real system. Thus, the approach is general with respect to disciplines and their different theories and to

---

[1/] Cowles Commission variety with parameters probabilistically estimated, usually from time series data.

techniques. It is also general with respect to sources and types of data, and information. And finally it makes use of the technology of the modern electronic computer as do many of the specialized techniques when used separately. Thus, the approach used in this project is not in any way competitive or in conflict with any specialized technique, theory, or discipline. Rather it encompasses any and all of these techniques and uses them as and where appropriate in modeling a system relevant to the study of a particular specific problem or constellation of problems.

The project focuses on modeling the agricultural sector to assist decision makers at the planning, policy, program, and project levels, and at the national and regional, sector and subsector levels. Though the systems simulation approach is useful in analysis of a myriad of problems outside of agriculture as well as within, this project clearly cannot and should not attempt to apply the approach in all of the many areas and ways in which it is applicable. Further this project can contribute to and benefit from theoretical, methodological, and operational problem solving research efforts in other projects which are using, gaining experience with, and further developing various specialized techniques. The need is for cooperation to exploit the complementarity between the more specialized techniques and the more general approach. Exploitation of these complementarities among various projects can provide beneficial advances to all concerned. AID, as the funding source for this and other projects, should encourage and be receptive to the building of linkages and mechanisms for exploiting the complementarities among these projects. The MSU team stands ready to cooperate with other projects as mutually satisfactory mechanisms can be devised.

PD-AAF-401
9310356 (6)

2p

Project Review Report - RIGC (8/15/74)

Project: Adapting Simulation Models to Agricultural Sector Analysis - Michigan State University.

Project Manager: L. B. Fletcher, TA/AGR

Discussion Highlights:

Dr. L. B. Fletcher invited attention to the supplemental materials, namely, pages 9-15 of the Project Statement and six evaluation reports which had been delivered on August 14 to RIGC members. He then reviewed the history of this project from the original work in Nigeria under contract AID/csd 1557 through application of the simulation model in Korea in early FY 74 under contract AID/csd 2975. This work was evaluated and reviewed in a seminar held March 27-29, 1974. The proposed extension has the objectives of (1) improving the construction and content of the simulation model to increase its effective utilization in Korea; (2) continuing development of simulation work at MSU; (3) continuing training activities to develop trained manpower for Korean operation of the capability; and (4) development of the software library for wider international utilization.

J. J. Dalton, the ASIA/TECH member of RIGC, raised several questions about this project in his memorandum of August 15, 1974 to Dr. Erven J. Long, with copies to all RIGC members. Lee Fletcher stated that he agreed with Dalton Memorandum that the items (a) through (e) on page 2 needed to be addressed within the proposed 18 month contract extension. There is recognition by MSU that the staffing was not adequate after 6/72. Timing is important in providing evaluation work for policy problems in connection with the 4th 5-year plan now under development. The ROK needs component models e.g., grain management, and has made substantial commitment.

Dr. Long stated that delay in action on this proposal to the December RAC would introduce interruption to contract continuity. Possibly inputs to the project could be accomplished in line with Jim Dalton's suggestions in getting this proposal ready for the October RAC. Roy Mimms agreed stating that while the proposed extension does not cover the points raised, there is general agreement that delay is undesirable. However, there is a gap in the proposed funding in that the indicated contribution of $291,220 by the USAID/Bureau and/or ROKG is not provided for in any budget. Dr. Long agreed that this is an important operational matter. If the Mission cannot provide the necessary funds, can the project be viable with only TAB input?

Mr. Antonio Gayoso, AFR Bureau stated that the project pushes the state of the art, and that there is uneasiness because of the vagueness of specification of its applicability to other countries, particularly so if there is danger of loss of mission support. Charles Stockman indicated that the LA Bureau is interested in the project as an example of the diversity from which the Agency can benefit. They do support it and want it to continue, but are concerned about adequate support.

Burnie Merson raised the question about OLAB participation in this project formulation as previously discussed with TA/AGR. Raymond Malley, PPC, asked whether the objectives of the extension could be accomplished within the 18 minths proposed. Lee Fletcher stated that he believes that there will be some continuing need for support after that period.

Motion: That the proposed extension be approved, provided that the issues raised by Jim Dalton be addressed in the submission to PAC, and that a practical understanding on funding be clarified before the submission to RAC. Moved by Mimms, seconded by Stockman, approved unanimously.

PAR

File: AID/csd-2975
Michigan State U
C-2 10
D-1
9310536
PD-AAF-401

May 15, 1972

TO: AID Research Advisory Committee

FROM: MSU Project Review Committee

Vernon W. Ruttan (UM) Chairman
Charles Frank (Princeton)
Thomas Naylor (Duke)
Arthur Coutu (AID/TAB)
Richard Suter (AID/LA)
Milo Cox (AID/TAB)
James Hoath (AID/TAB)
James Brown (AID/A)

RE: Review of MSU Project, "Adopting and Testing of Agricultural Simulation Model to Sector Analysis (AID/csd-2975)

The Project Review Committee met in East Lansing on Friday, May 5. In addition to the members of the Review Committee the meeting was attended by the project leader (Glenn Johnson) and senior staff (Thomas Manetsch and Edward Rossmiller); by a representative of the cooperating agency in Korea (Dong-Min Kim, Director, Agricultural Economics Research Institute, Seoul); by the Chairman of the Advisory Committee to the project appointed by the Nigerian Ministry of Agriculture (Samson Olayide, University of Nigeria, Ibadan); by the Agricultural Officer from the AID Mission in Korea (Francis Jones); by several MSU junior staff members and graduate students attached to the project; and by administrative officers from the cooperating departments and administrative units at MSU.

The present MSU contract (AID/csd-2975) evolved from an earlier contract (AID/csd-1557) that was designed to develop a simulator for agricultural policy analysis. Its objectives were primarily methodological rather than operational. The present contract was designed to test and adapt the original work for policy analysis and programming for the agricultural sector in two countries. This work is going forward in Korea and Nigeria.

AID's increased emphasis on agricultural sector analysis is concerned with more quantitative efforts to evaluate the effects of alternative policies and programs on production and equity goals. The MSU contract on simulation is one of AID's efforts

on conceptual and methodological issues in sector analysis as well as on applied research designed to adapt a simulation approach to agricultural sector analysis.

The general purpose of the research review was to assess progress on AID/csd-2975 in adapting a simulation approach to agricultural sector analyses in Korea and Nigeria. The review was designed to meet a RAC requirement for full financial support of the research activity. The motion of RAC of 4/15/71 recommending approval of the research project reads as follows:

Approval of funding of the first and second years at the level of $150,000 each year. Approval of the full second and third budgets proposed should depend on (a) acceptance of a full test of the simulation model by and with the cooperation of at least one government in a suitable LDC; (b) arrangements with the local AID mission acceptable to AID; and (c) a favorable report to AID and RAC of a site visit to be made in the first half of 1972.

The MSU Project has generated a substantial body of professional literature (See Attachment 1). It was subject to professional review and evaluation at a conference devoted specifically to the MSU project held at Airlie House on May 1, 2, and 3. As a result it was possible for the review committee to spend somewhat less time than might have been necessary under other circumstances on the theoretical amd methodological foundations of the generalized simulation approach and focus more directly on problems of implementation and application. The results of the panel review are summarized below:

1.0 Sector and Sub-sector Studies.

In both the earlier (Nigerian) and in the present effort the simulation exercise was proceeded by an in depth sectoral analysis of the agricultural production and marketing systems. The sector analysis was in turn dependent on the availability of a substantial body of technical data and micro-economic production and marketing studies. In the Korean effort the subsector analysis has proceeded simultaneously with the simulation exercise (See Attachment 2 for the list of Sector Analysis Working Papers). It is apparent that the Nigerian experience has lead to substantial gains in the efficiency with which it is possible to organize and conduct the sector analysis.

While the stated objectivesof the original Nigerian effort , were primarily methodological the models developed did have substantial utility for policy analysis and programming. It was possible to transfer several modules from the Nigeria model to Korea with only modest adaptation. Even where substantial adaptation was required or completely new modules were introduced the modeling experience gained in the previous effort contributed substantially to the efficiency with which it was possible to implement and complete the sector study in Korea. As a result it has been possible to devote a higher share of the total effort in Korea to exploring some of the qualitative and institutional dimensions of agricultural development than in the Nigerian simulation effort.

A draft of the sector analysis for Korean agriculture is scheduled for delivery to AID and the GOK for review by the end of May. Because of the rapid progress of the simulation effort there has been some discussion of a short delay until the end of June to permit incorporation of some of the preliminary output of the simulation effort.

The Review Committee was impressed by the speed and effectiveness of the initial effort. The interaction or feedback between the sector studies and the simulation effort appears to have lead to rapidly decreasing costs in the implementation of the sector-simulation methodology. The Committee would anticipate that costs would continue to decline in the future. It regards the simultaneous sector-simulation effort as essential. It commends the MSU-GOK team for its effectiveness in moving forward on both fronts.

The Committee notes that there has been some diffusion of the MSU generalized simulation approach in other LDC's. Application of the livestock sub-sector module are being implemented in Venezuela and Colombia, for example.

2.0 Participation of Indigenous Personnel.

In Nigeria the policy and programming exercises are proceeding under the direction of a committee established by the GON drawing on both government and academic staff. In Korea the local support has been organized primarily within the Agricultural Economics Research Institute (AERI). There has also been staff participation from the National Agricultural Cooperative Federation (NACF), the Office of Rural Development (ORD), and other agencies of the Ministry of Agriculture and

Forestry (MAF). The Panel is concerned that the Korea project has not drawn on the competence available in Korean Universities. Administrative steps are now being taken with the GOK to make such cooperation feasible. Participation by MSU and Korean personnel in the sector analysis studies is shown in Attachment 2.

It appears that there exists, reasonably adequate computer software and personnel capacity to operationalize the simulation work in Korea. Such capacity is less adequate in Nigeria. The panel does not yet feel that it is in a position to give a definitive answer to the question raised in the earlier RAC discussions as to whether it is realistic to assume that the generalized simulation approach could be adopted, operationalized and institutionalized in an LDC with indigenous personnel. In both countries a serious effort is being made to develop the required staff capacity. In both countries government salary scales and personnel policies represent a constraint on the development and institutionalization of such capacity.

It is the judgment of the Committee, of the MSU team, and of the Korean and Nigerian participants at the review that much greater attention will need to be given to specialized non-degree oriented training if such capacity is to be adequately institutionalized. The Committee urges the MSU project director and senior staff to give particular attention to the training effort needed to meet this objective. The Committee urges the AID to make sure that the training effort is adequately funded. It appears likely that both the training activity and frequent consultation with MSU personnel will be required beyond the term of the present contract (June 30, 1974). The AID should make provision for a continued linkage between the national program analysis and sector simulation efforts in the two countries and the staff capacity at MSU beyond the term of the present contract.

3.0 Methodological Considerations.

The Committee has a high regard for the progress the MSU team has made at both the methodological and operational levels with the generalized simulation approach to agricultural sector analysis. Testimony by both MSU and Nigerian and Korean representatives indicate that the flexibility of the approach has also given it a level of "credibility" at the administrative and policy levels. The Panel urges the AID staff and the MSU team to give more specific attention to the design of a methodology for evaluating the impact of the Nigerian and Korean simulation efforts on the policy decision program implementation

There also remains, the unsolved problem of model validation. At present procedures for validation "in the small" - for the separate micro-modules - seem more advanced that for validation "in the large" - for the macro-implications of model projections. This is an issue to which the MSU project should, consistent with the extensive experience of its staff, give considerable attention.

4.0 Recommendation.

The Committee recommends that AID proceed with the funding of the project (AID/csd-2975) for the remaining period of the contract (to June 30, 1974). We urge both MSU and AID to give serious consideration to the points raised in sections 1.0 - 3.0 above.

Attachment 1

Selected References
on
MSU/AID Effort in
General System Simulation and Sector Analysis

1. A Generalized Simulation Approach to Agricultural Sector Analysis - November 30, 1971.

2. Preliminary Report - Korean Sector Study April 1972

Bierman Russell W., and Iddings, Edward G. REVIEW OF THE MID-WESTERN NIGERIA AGRICULTURAL CREDIT CORPORATION AND RECOMMENDATIONS FOR IMPROVEMENT. USAID Consultant Report No. C-66, June, 1967.

Brown, Dewey. PROSPECTS FOR MINOR IRRIGATION IN NORTHERN NIGERIA. USAID Consultants Report No. 23, April 1962.

Carroll, Tom W. SINDI 2: SIMULATION OF INNOVATION IN A RURAL COMMUNITY OF BRAZIL. Computer Institute for Social Science Research, East Lansing, Michigan, 1969.

Carter, N. G. IN INPUT-OUTPUT ANALYSIS OF THE NIGERIAN ECONOMY. Working Paper, School of Management, Massachusetts Institute of Technology, Cambridge, Massachusetts, 1966.

Consortium for the Study of Nigerian Rural Development. CSNRD's RESEARCH SIMULATION RESEARCH AND THREE COORDINATED MUCIA PROPOSALS. East Lansing, Michigan: Michigan State University, 1966.

Consortium for the Study of Nigerian Rural Development. WORKSHOP ON POSSIBLE USE OF SIMULATION MODELS BY CSNRD FOR NIGERIAN AGRICULTURE. East Lansing, Michigan: Michigan State University, February, 1966.

Consortium for the Study of Nigerian Rural Development. PAPERS ON NIGERIAN RURAL DEVELOPMENT. East Lansing, Michigan: Michigan State University, May, 1967.

Consortium for the Study of Nigerian Rural Development. PRELIMINARY STRATEGIES AND RECOMMENDATIONS FOR USAID ASSISTANCE TO NIGERIAN RURAL DEVELOPMENT, 1968-1985. East Lansing, Michigan: Michigan State University, March, 1968.

Essang, Sunday Matthew. "The Marketing of Palm Oil in a Rural Community." M.S. dissertation, University of Ibadan, Nigeria, 1967.

Essang, Sunday Matthew. "The Distribution of Earnings in the Cocoa Economy of Western Nigeria: Implications for Development." Unpublished Ph.D. dissertation, Michigan State University, East Lansing, Michigan, 1970.

Halter, A. N., Hayenga, M. L., and Manetsch, T. J. "Simulating a Developing Agricultural Economy: Methodology and Planning Capability." Reprinted from AMERICAN JOURNAL OF AGRICULTURAL ECONOMICS. Vol. 52, No. 2, May, 1970. pp. 272-284.

Johnson, Glenn L. QUANTITATIVE PROBLEMS IN THE SIMULATION OF THE NIGERIAN AGRICULTURAL ECONOMY. East Lansing, Michigan: Michigan State University, October, 1966.

Johnson, Glenn L. EVALUATION AND DEVELOPMENT OF ANALYTICAL MODELS FOR RURAL DEVELOPMENT. East Lansing, Michigan: Michigan State University, April, 1967.

Johnson, Glenn L., et al. A SIMULATION MODEL OF THE NIGERIAN AGRICULTURAL ECONOMY: Phase I--THE NORTHERN NIGERIAN BEEF INDUSTRY. East Lansing, Michigan: Michigan State University, April, 1968.

Kellogg, Earl. "A Temporal and Spatial Model to Assist in Evaluating Investments in the Nigerian Beef Distribution System." Unpublished Ph.D. dissertation, East Lansing, Michigan: Michigan State University, 1971.

Manetsch, T. J., et al. "Simulation of Nigerian Development--The Northern Region Model." IEEE TRANSACTIONS ON SYSTEMS,MAN AND CYBERNETICS. January, 1971.

Manetsch, T. J. "The Use of Computer Simulation Models in Korean Agricultural Sector Analysis. May 1, 1972

Naylor, Thomas H. "Policy Simulation Experiments with Macroeconometric Models: The State of the Art." Reprinted from AMERICAN JOURNAL OF AGRICULTURAL ECONOMICS. Vol. 52, No. 2, May, 1970, pp. 263-271.

Attachment 2

Sector Analysis Working Papers

	WORKING PAPER	MSU PERSONNEL	KOREAN PERSONNEL
1.	Crop Production	Wright Manetsch Rossmiller	Kim, Kwang-Hee (MAF) Kim, Young-Sik (AERI)
2.	Livestock Production	Wright Deans Manetsch Rossmiller Kyle	Kim, Kwang-Hee (MAF) Kim, Young-Sik (AERI)
3.	Enterprise Combination Analysis (changed from fertilizer, seed, and crop protection)	Vincent	
4A.	Credit	Brake	Kim, Young-Jin (NACF)
4B.	Co-ops	Larzelere	Shim, Kyo-Bo (NACF)
5.	Manpower Implications of Mechanization	Hathaway Rossmiller	Kim, Byeong-Do (AERI)
6.	Land and Water Resources	Haley Barlowe	Ryu, Byung-Su (MAF)
7.	Agricultural Market Control, Organization, Regulation	Shaffer	Shim, Kyo-Bo (NACF)
8.	Agricultural Price, Income Tax, Subsidy Policy	Ferris Rossmiller	Suh, Han-Hyeck (AERI)
9.	Capital Formulation, Savings Investment, Disinvestment	Brake Johnson	Suh, Han-Hyeck (AERI) Kim, Dong-Min (AERI)
10.	Infrastructure	Libby	Kim, Byeong-Do (AERI)
11.	Research and Technological Advance	Wittwer Johnson	Chung, Moon-Nam (ORD)
12.	Extension, Education,	Miller Vincent	Chung, Moon-Nam (ORD)
13.	NACF Organization	Sorenson Frost	Kim, Young-Jin (NACF)

(continuation)

	WORKING PAPER	MSU PERSONNEL	KOREAN PERSONNEL
14.	MAF Organization	Hathaway Rossmiller	Kim, Kwang-Hee
15A.	Monetary, Fiscal, Price Level, Employment Balance of Payments	Gustafson Haley Tolley Byerlee	Kim, Dong-Min (AERI) Suh, Han-Hyeck (AERI)
15B.	Trade Policy, PL480	Sorenson Rossmiller	Kim, Dong-Min (AERI) Suh, Han-Hyeck (AERI)
16.	Nutrition, Income Distribution, Effective Demand	Hayenga Shaffer	Ryu, Byung-Su (MAF)
17.	Demographic Characteristics	Beegle	Kim, Byeong-Do (AERI)
18.	Agricultural--Nonagricultural Interactions	Byerlee	Ryu, Byung-Su (MAF)

9310536 (8)
PD-AAF-401

9p

ELEMENTS TO BE INCLUDED IN THE WORK AND STAFFING PLAN ON THE KOREAN RELATED PORTION OF THE AGRICULTURAL SECTOR ANALYSIS AND SIMULATION PROJECT

1. Grain management program component - The following steps are to be taken with respect to the grain management program component.

A. A report will be prepared by 1 June 1974 as an internal policy document for MAF on the subject - grain import and price policy under changed Korean and world conditions. Input into this effort will include Richard Phillips for two weeks, G. E. Rossmilller for two weeks, probably under KAPP, Forrest Gibson for one week, and Lloyd Teigen for one month. To the extent that the grain management component is operational it will be used in this activity. However, it is likely that formal model input for this first interim report will be provided by one of the more primitive versions of the KASS model.

B. By 1 September 1974, the thesis version of the Gibson work on the GMP will be complete in reportable form. In the interim Gibson will have returned to MSU for consultation and interaction with Manetsch, Abkin, Johnson, and Rossmiller as well as his committee in moving toward this output.

C. By 1 April 1975, a KASS special report documenting the Grain Management component application and policy reporting will be done.

D. By 1 September 1975, a series of policy applications will have been made and short policy papers produced for use by MAF decision makers.

validation and verification

2. <u>The simultaneous equation annual price adjustment component</u> -

This component is in the testing and debugging stage at this time and with concentrated effort can become operational in short order. The work will include the following:

1. don't believe the elasticities are reversible
2. whether the elasticities are any good

A. By 15 April 1974, SAPA will be operational with new simultaneous demand elasticity estimates.

B. By 15 May 1974, a paper documenting this component and displaying basic applications will be produced.

attempt will be made to improve the data base

C. By 1 July 1975, lagged price and quantity adjustments allowing for carryover stocks and a lagged price expectation model will be included in the component.

D. By 1 July 1976, research on nonreversible supply and demand functions will be incorporated into the component.

3. <u>Recursive linear programming component</u> -

The full integration of the RLP component into the KASS model depends upon having a functional annual price adjustment mechanism as indicated under 2 above. Major technical requirements must be met before model tuning and policy application work can be done. Work by DeHaen, Bauersachs, and possibly Singh and Abkin is required to undertake the following steps:

need theory for a) assumptions b) conditions

A. By 1 September 1974, interface an LP package program which has greater capacity and speed.

major hole here is the price linkage

B. By 1 September 1974, final linkage with the rest of the KASS model must be completed including the feedback loops.

C. By 1 October 1974, a policy paper detailing base policy runs with the linked RLP and KASS model, with the work in steps A and B above incorporated, will be completed.

D. By 1 October 1975, research and development work on investment/disinvestment theory and user cost implications will have been completed by Idachaba, Singh and/or deHaen and documented into a report which will be the basis for incorporation of these new elements into the RLP in Korea.

E. By 1 July 1976, the new elements described in D above will have been incorporated into the Korean model.

4. Yield determination component - This component is being developed as a Ph.D. thesis by Lee, Jaung Han at MSU. It is designed to internalize yield projections based upon public sector investment and technical relationships with fertilizer, plant protection chemicals, and other modern inputs. The following steps are required:

A. By 1 September 1974, conceptualized version of the yield determination component will be completed.

B. By 1 March 1975, an operational version of this component will have been linked to the KASS model and a thesis completed by Lee, Jaung Han.

clarify

?

C. By 1 September 1975, KASS special report will have been prepared documenting the component and base policy runs with the component linked to the rest of the KASS model.

5. Demographic Component including migration - Work will be staged as follows:

A. By 1 July 1974, an updated version of the present demographic component will be operationa. This version will incorporate the low cost theoretical and methodological changes pointed out in the Craig evaluation report. It will also include a shift to the 1970 census base population figures as the basis for model run starts. A revised version of the KASS special report on population will be completed.

?

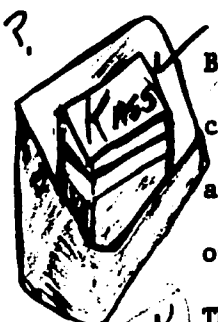

B. By 1 September 1975, the migration portion of the population component will have linkages to appropriate economic and social variables in the rest of the KASS model including the RLP and the input/output interface between the agricultural and nonagricultural sectors. The longer term research development work in both East Lansing and Korea will include coordination of the Purdue model to incorporate whatever of thatmodel is appropriate to the KASS work. More extensive literature review and modeling will be done on linking economic and social variables affecting migration between farm and non-farm populations with particular attention being paid to the development of part-time farming. In addition, work on the migration implications of investment/disinvestment and user cost concepts will be carried out.

1. Cross-reference to other studies
2. linkages

Causal relationship structure

To the extent useful, the thesis by the East-West Center students Park and Kim will be integrated.

C. Work by the KAPP project with regard to a data management system (1974-1975) will pay particular attention to the demographic data needs of the Ministry and KASS. A data systems consultant under KAPP will be asked to consider and incorporate these needs in his outline of a data management system.

6. <u>Expanded input/output component linking the agricultural and non-agricultural sectors</u> - The present two sector input/output component without feedback is not adequate to handle sophisticated policy analysis required over the next several months. Dr. Teigen has been working on a 15 sector aggregation of the Bank of Korea input/output model. This will provide the basis for development of a model to interface agricultural and nonagricultural sectors with dynamic feedback. Work on this component will proceed as follows.

   A. By 1 July 1975, a 15 sector I/O component with dynamic feedback will be linked to the KASS model. In order for this component to be useful as part of the model for assessment and input into the fourth Five-Year Development Plan, work will begin in August 1974 by Mike Abkin on integration of the Teigen 15 sector input/output breakdown as a dynamic model component into KASS. Consultancy on the building of this component will take place with KDI, EPB and BOK.

   B. By 1 October 1974, conceptualization of the component and linkage specified under A above will be completed. Even

though completed integration may not be possible before work begins on the KASS input to the four to five Year Development Plan the model conceptualization and matrix will be completed so that informal linkage can take place.

It is possible that an economic Ph.D. student at Michigan State will develop a thesis topic in this area during 1975-1976.

7. Livestock component.

how much time and effort in each.

Discussion between MAF and KASS needs to take place immediately to determine whether and in what way the livestock program component development priorities have changed due to changing domestic and world conditions during the last few months. Rising grain prices, increased energy constraints and the recent slowdown in the economic growth of the general economy with the possible result of lower rural-urban migration rates and lower pressures for mechanization will likely change the initial focus of a livestock program component. Work required includes the following:

A. By 1 September 1974, computerization of the simple projection work presently being done by paper-and-pencil in the livestock bureau of MAF.

B. Present preliminary work on the conceptualization of a livestock component will be continued beginning in September 1974 by an AERI Korean employee now in training at Louisiana State. He will concentrate on the implications of conversion from draft to dairy and beef animals; replacement of draft animals by mechanized sources of

power under short term energy constraints; and changed migration conditions; the livestock mix implications of increasing grain prices; and the increasing role of forage in livestock feeding and implications of this for cropping patterns.

C. Interest in using the livestock component topic for thesis research by a Korean student at MSU will be explored. In any case the livestock program component development will likely take a somewhat lower priority than it had several months ago.

M/8. <u>Operational KASS input into Fourth Five-Year Plan Development</u>.

MAF, EPB and Blue House participation in development of the agricultural portion of the Fourth Five-Year Development Plan will begin again in September 1974. KASS should be in a position to make a major contribution in this effort. Therefore work toward this end should proceed as follows:

A. By 1 August 1974, formulate a work plan for the period starting 1 August 1974 to gear the KASS model toward policy runs using EPB and MAF Fourth Five-Year Development Plan guidelines. Personnel working on this project will include Mike Abkin, I. J. Singh, Lloyd Teigen, G. E. Rossmiller, and G. L. Johnson. ✓ Working with Koreans

B. Work on input/output component will begin by 1 August 1974.

C. If the planning coordinators office in MAF aggrees, ~~Fred Mangum,~~ policy analyst from KAPP, will help plan and run a conference in late September 1974 with MAF, EPB, Blue House and KIST participation focused on Fourth Five-Year Plan Development.

D. Policy and analytical papers will be completed for use in this planning process as appropriate.

9. KAPP related activities.

A. Major inputs from KAPP over the summer 1974 will include a work on grain price and import policy by Rossmiller, conference development and coordination by Mangum for the September conference indicated above, and input by Johnson and Culver on agricultural outlook definitions and data systems specification.

B. In fall 1974 begin development of benefit cost analyses, internal rate of return calculation and PERT analysis in a compatible fashion with the KASS model by KAPP program and project analyst personnel for future integration.

10. Local implementation of policy instrumentation.

The final chain in successful agricultural sector development is the implementation of policy, programs and projects. This depends very heavily upon the performance and administrative skills of local rural development officials. Preliminary work on this aspect will proceed as follows:

A. A thesis topic will be developed with Bo Andersson at MSU centered on Korean rural development particularly through the New Community Movement. Andersson will spend time in Korea in 1975 to do research data collection. Continued followup on this project will be planned as appropriate.

11. Activities to be begun after September 1975

A. Develop and carry out a detailed fishery sector study and model building activity. By the time this work is begun in Korea there should be thesis work completed on a Nigerian fishery sector study which could be drawn upon for the Korean work. In additior

an attempt will be made to plan a thesis research project by a Korean graduate student at MSU in this area to begin prior to September 1975.

B. Develop and carry out a detailed forestry sector study and modeling activity. Again, prior to the start of this work in Korea, thesis research on a Nigerian sector study should be available. Also by that time a Scandanavian forestry model should be operating and documented. These should be excellent sources upon which to draw for the Korean effort. In addition, an attempt will be made to involve a Korean graduate student at MSU in thesis research in the area.

C. Program and project evaluation and implementation planning model components developed in coordination with KAPP will be integrated into the KASS activity.

D. Income distribution and social welfare aspects will be studied and integrated into KASS activities.

E. Continued work on international and interregional trade will be specified and carried out.

F. Continued, and hopefully expanded, activity on local government administration of agricultural development will be done.

G. Interfacing of KASS models with the newly developed data management system will be accomplished. Data management system development is primarily a KAPP activity.

H. Other activities will be developed and carried out as needs are determined and in consultation with MAF and USAID.

question of whether or not RAC should introduce into the project activity of legitimate issues which the contractor fails to address he said. Dr. Brady suggested that the issue should be discussed at the next RAC meeting. Dr. Montgomery suggested an amendment to the motion which would require additional AID resources in order to create the opportunity of introducing the recommended changes in the project. After a brief discussion that followed, Dr. Ruttan introduced a motion.

3p

Motion: RAC recommends approval of 6 months extension of the project as proposed in the document to allow time for restructuring of the project proposal by AID and Oregon State University staff.

Dr. Hagen requested and received affirmation that a copy of the "legislative history" will be supplied to the contractor.

Motion: (Moved by Ruttan, seconded by Schweigert)
Vote: Unanimous

Further discussion developed regarding the social economic interface. Dr. D. Peterson felt that the project would not be able to deal with this system, because this would result in a fragmentation of the technical program. Dr. Ruttan on the other hand, believed that Oregon State University should consider the full range of weed control techniques and all the problems associated with it such as economic analysis and developmental techniques at farm and perhaps even higher level. For example, this project should produce information on what happens to herbicides in soils and crops. Dr. Anderson, cautioned that if broad social implications are to be a significant part of the project, than the program would become impossible to develop technically. Dr. Hagen agreed with Dr. Ruttan's statement. He then added that the main objectives of this project should not be solely to destroy weeds but to find alternative control methods as well.

Progress Report

Adapting and Testing of Agricultural Stimulation Model to Sector Analysis - Michigan State University

Dr. Ruttan reported for the RAC subcommittee. He recounted the earlier (4/15/71) RAC decision to recommend limited initial approval, of the proposal with full approval of the project when at least one AID Mission and LDC would cooperate in a full test of the simulation model, and when the RAC subcommittee upon site visit is favorably inclined to the project. A site review was held on May 5, 1972 at East Lansing and the RAC subcommittee was in favor of supporting this project. Dr.

Ruttan noted that the project has had similar exposure at an AID sponsored symposium on the project on May 1, 2 and 3 and at the Iowa State University Conference on April 24 and 25, 1972.

Continuing the discussion, Dr. Ruttan reported favorably on the development of the simulation model in Nigeria and the transfer and adaptation of the model elements to Korea. He also reported that the principles of this work, especially the application of the livestock module of the simulation model, have been used in studies conducted by the governments of Colombia and Venezuela. He felt that to date the project had made positive contribution to other efforts such as in-depth sub-sector studies in terms of speed, cost-saving, and quality. Since the development of the model to produce sub-sector analyses is essential. The Review Committee recommended that AID continue to foster this kind of relationship.

Dr. Ruttan commented favorably on the participation of LDC institutions and their personnel in the program. He noted the adequacy of computer facilities in Korea but not in Kenya, and emphasized the need for training of LDC personnel to improve the opportunities to implement the system in LDCs. Dr. Ruttan also noted that the goal of the research project should require establishment of a working relationship between the MSU and the LDC government institutions which would last beyond the term of this contract.

The subcommittee report also indicated that the model validation, should continue to receive specific and careful attention by MSU and AID.

Drs. Hagen and Heady asked for more explicit information on the nature of the simulation model. Dr. Heady felt that there will be a problem in transferring the model from Nigerian situation to Korean conditions especially when the nature of the outputs from the model's application are considered. Dr. Montgomery inquired about the validation procedures used by MSU. Dr. Ruttan observed that he has personal criticisms regarding the model: Price distortions of existing economic policies do not seem to be built into the model; Nigeria and Korea may not be able to afford this sophisticated analytical effort; and the model may become so powerful a tool that the continued need for human analytical insights to direct its operation may be neglected.

Dr. Ruttan and Dr. Coutu presented brief descriptions of the models constructs; the uses made of the model as a whole,and of the model subunits. Both of them noted that modifications were needed in some subunits of the Nigerian model before it can be used in Korea; however, they indicated that subunits were transferrable. Dr. Coutu also noted that the Korean model is incomplete at this stage, and that AID and MSU are sensitive to the validation problem and, as a consequence, have used several avenues to check and improve the model's validity.

Motion: **RAC recommends that (1) AID proceed with funding of the project for the remaining period of the contract (June 1974); and (2) the contractor and AID give special consideration to participation of indigenous personnel and methodological aspects of research activities, two of the points raised in the review subcommittee report.**

(Moved by Dr. Ruttan, seconded by Dr. Heady)

2. Simplified Techniques of Fertility Control - Johns Hopkins University

The subcommittee which reviewed this proposal (Wishik, Hagen, Langmuir, Schweigert) recommended that the project be approved. Chairman, Dr. Wishik described each of the six proposed phases of the project, emphasizing strengths and weaknesses. Questioned was the practicability of pregnancy testing, prior to the first missed menses, particularly as a test in fertility control in LDCs. He noted pregnancy testing, as such, could be an interesting procedure for developing demographic information on early pregnancy. Moreover for this type of data gathering, the method employed would not need to be extremely sensitive as suggested by the proposal write-up. It was his opinion that a self applied field method that can be employed during early but not necessarily the first month of pregnancy is what is needed in both LDCs and developed countries.

In the project phase of drug testing, Dr. Wishik questioned the importance for intensive teratological studies if the purpose of the project is to promote termination of pregnancy. In regard to instillation of materials into the uterus, he voiced concern toward: (1) instrument development and safety of procedure and (2) the development of a system that should be more efficient and require less time than currently used suctions procedures. In this research, particular concern must be given the human experimental subject.

Dr. Wishik believes mid-pregnancy termination to be an important area. However, he recommended that substances should be evaluated for effectiveness at the lowest level feasible after which higher dose quantities could be studied. The safety of drug dose must be carefully regulated to insure protection of the patient. Research areas of cervical dilatation and equipment development created no problem in his mind.

In regard to the training section that was built into this project, he suggested that it be restructed to be a longer training period that incorporates, in addition to training in all current procedures of con-

930536 (10)
PD-AAF-401

KPA 1-536
KAC Meeting
Oct. 17-18, 1974

RESEARCH PROJECT STATEMENT

August 2, 1974

PROJECT: "Adapting Simulation Models to Agricultural Sector Analysis", Contract AID/csd-2975 17p

1. Summary of Extension

Contractor: Michigan State University

Principal Investigators: Professors George E. Rossmiller and Glenn L. Johnson, Department of Agricultural Economics, Michigan State University, East Lansing, Michigan

Duration of Extension: 18 months ending June 30, 1976

Estimated Total Cost of Extension: $697,753 a/

Funding by Fiscal Years: FY 1975 $244,613 b/
FY 1976 $453,140 a/ c/

Project Manager: L. B. Fletcher

This project addresses the continuing urgent need of LDC governments for efficient and flexible quantitative methodologies for analyzing alternative agricultural development strategies and determining priorities for policies, programs, and projects in their rural sectors. Its purpose is to design and test simulation models for practical application in agricultural sector analysis. Its scope includes the construction of generalized, computerized systems simulation models; application and testing of the approach in Korea; development of a software library to facilitate transfer of the approach to other LDC's; and the organization of a training program to strengthen the capacity of planners and policymakers in LDC's to apply and use the approach.

The most important objective of the extension is to build as rapidly as possible the Korean capacity to further develop, manage and apply the sector simulation approach. The software library will be expanded by including generalized and documented model components and computational routines and transferred to one or more international agencies for further development and operation. The training program will focus on technical personnel and policymakers from LDC's to create capacity to adapt and apply computer simulation models and competence to utilize the results for development planning and programming.

---

a/ Represents total requested additional funding for AID support. Division between research funding and Mission/bureau support for work in Korea will have to be worked out by TAB and USAID/Asia Bureau.

b/ Funding for 6 months 1/1/75 to 6/30/75 only. Funding for 7/1/74 to 12/31/74 already provided by TAB and USAID/Korea.

c/ Only represents AID funding. Additional funding expected from non-AID sources.

2. Research Purpose and Expected Results

The basic objective of this project is to test, apply and further develop, under actual LDC conditions, the computerized systems-simulation model approach to agricultural sector analysis. This objective was established for the purpose of increasing the effectiveness and lowering the cost of policy analysis for program and project formulation and evaluation in LDC's.

To accomplish this objective, the project places emphasis on the following:

a. Further adaptation and design of the approach on the basis of experience using it under field conditions;

b. Development of the capacity to use computerized simulation models to analyze and evaluate agricultural policies, programs and projects in LDC's;

c. Organization of a software library, located initially at MSU but to be transferred later to an international agency, to make model components and computational routines available for LDC utilization;

d. Training of technical personnel from LDC's in the application, adaptation and further development of system simulation models and LDC policymakers in the use of the results for the design, analysis and evaluation of development policies, programs and projects.

This project deals directly with the key problem of improving the capabilities of LDC's for policy analysis and development planning with emphasis on agricultural and rural development problems. It makes use of quantitative systems models to assist policy makers in making better decisions on priorities at the national, regional, sector and subsector levels. Korea was selected as the main location to test the approach. Related activities have involved Nigeria, Colombia and Venezuela.

a) Further research and development work on the design and application of generalized systems models interfaced with specialized components designed for subsector and subnational program and project evaluation;

b) Creation of an institutional base and manpower resources in Korea to apply, utilize and extend the specialized components and overall sector model;

c) Generalization and documentation of the model components and computational routines developed in Korea and establishment of an operating software library in an international agency;

d) Operation of a training program at Michigan State University and in LDC's to increase the capacity to use computerized system-simulation models in policy analysis and planning.

3. Significance of the Research

During the first three-year period, this project demonstrated the usefulness of the systems simulation approach for sector planning in Korea.[1/] The Korean application was based on the earlier model developed for but not applied in Nigeria which was constructed under Project AID/csd-1557. Other activities of this project at the subsectoral level have involved Nigeria, Colombia and Venezuela.

AID continues to assign high priority to the development of methodologies and creation of capability in LDC's for policy and program analysis. This project is a significant element in AID's research and technical assistance activities that address this key problem area. The need is great and interest is high in LDC's for further adaptation and testing of quantitative approaches for analyzing policy alternatives and evaluating program and project proposals at the national, regional, sectoral and subsectoral levels.

The application in Korea was useful in itself but also because of what it has revealed about the problems in theory, technique, data, and institutional capacity which must be overcome to expand the efficient utilization of the approach in practical development programming. These problems are discussed further in the evaluation papers attached to this statement and are summarized in the project appraisal contained in Section 8 of this statement.

The continued development and application of the systems simulation approach for policy analysis, program formulation and project selection is the basic objective of this extension. The need is to improve the construction and content of the simulation models and increase their potential for efficient and effective utilization. Actual use has revealed deficiencies in model structure and operational capabilities that can be remedied through continued research and development activities. Specialized components involving recursive linear programming, input-output tables and econometric analyses, can be interfaced with the overall systems model. The approach can be extended to include specific regional, development and project appraisal applications. More adequate, accurate and relevant data can be incorporated into model design and parameter estimates.

1/ Rossmiller, G. E., et al., Korean Agricultural Sector Analysis and Recommended Development Strategies, 1971-1985. Ministry of Agriculture and Fisheries, Seoul, Korea, East Lansing, Michigan. 1972.

Experience has also elucidated the necessary conditions for institutionalizing an analytical capacity based on the approach to strengthen the policy analysis and decision process at various levels of government. Trained manpower, budget allocations and an institutional base are necessary but not sufficient. Interaction of analysts with policymakers and appreciation by policymakers of the nature and usefulness of the results are also required for efficient and effective application.

The intellectual capital created by the research and development efforts and the application in Korea should be documented and made readily available to other potential users. This is the purpose of the software library. Additional use depends on the capacity of planning personnel and policymakers in other LDC's to understand, develop and apply the approach. The training program will help to satisfy this vital training requirement.

4. International Linkage and Utilization

Through a series of seminars sponsored by the Research and Training Network, which is operated by the Agricultural Development Council under Contract AID/csd-2813, the systems simulation approach has been compared and contrasted to other approaches that have been followed in agricultural sector analysis. This evaluation of experience is expected to continue through an international program of documentation and evaluation of alternative approaches to sector analysis that has been initiated by FAO in collaboration with AID and IBRD. This program should be extremely relevant and useful to LDC's in the process of designing and implementing programs to develop their capabilities for utilizing quantitative sector modeling approaches.

Project members have participated in numerous international conferences and meetings. These activities have led to widespread recognition by LDC and USAID personnel of the potential for the approach for improving sector analysis and planning.

In Korea, the major effort has been to utilize the approach for developing, testing and utilizing a working simulation model. The Korea model was successfully applied as an analytical tool in the policy planning and decision process. Specific usage included assessment of benefits from an expanded agricultural research program and projections used for a Long-term Agricultural Development Plan. The extension will permit the model to be extended and improved. It will be utilized as the basis for preparing the Fourth Five-Year Korean Development Plan for the Agricultural sector and for policy analysis and guidance in a number of subsectoral areas. This expected utilization in Korea during the extension is covered again in Section 6 of this statement and explained in detail in the attached proposal for extension.

In Nigeria, the model developed under the earlier contract was used in the preparation of the Perspective Plan for Agriculture to 1985. In addition, applications of model components have been made to the livestock subsector in Venezuela and Colombia.

The potential for additional transfer and utilization is large. This extension provides for further development of model components, establishment of an operating software library, and continuation of the training program as important elements in expanded utilization. It is expected that additional utilization at the country level will be developed through collaborative working relationships between LDC and U.S. university personnel utilizing IPA appointments and new financial arrangements.

Information about this approach and the experience of using it in Korea will be disseminated to LDC and USAID personnel through seminars and workshops planned for 1975 and 1976.

5. Management Considerations

As a part of the decision to carry out work in Korea under this contract, another contract (AID/ead-184) with Michigan State University was arranged with the Asia Bureau and USAID/Korea. This related contract required the University to:

a) complete a broad agricultural sector study within seven months;

b) complete an investment priorities analysis within one year; and

c) assist in improving program evaluation, data, and project appraisal capabilities of the government.

Work under the Mission/Bureau contract was completed using the initial models developed under 2975. The projects were viewed as highly complementary and operated to fully capitalize upon the complementarity. The information and analysis done under the short-term project was extremely useful in conceptualizing the further development of the simulation model components.

Since completion of Contract 184, a substantial amount of personnel time and resources of this project have gone into: (1) improving existing model components, (2) making the model more user-oriented, and (3) building new components. In addition, a substantial amount of effort has gone into concentrated training of Korean personnel in the systems approach and the use of simulation techniques. These activities received relatively less priority during the first year because of the time pressures imposed upon the activities under Contract 184. This concentrated training effort is making heavy use of the training program and software library components of Contract 2975 at the University.

During 1974, a new project was signed by the ROK and Michigan State University with funds provided by a USAID loan. This project, called the Korean Agricultural Planning Project, involves technical assistance to the ROK by the University in three major areas: policy analysis, agricultural outlook and statistics, and project evaluation. The scope of work under this project is included as appendix A of the attached proposal for extension

of project 2975. The activities under the planning project are to be coordinated with the work under this project to exploit to the fullest the simulation model components and, in turn, to guide the further development of the model to better serve the needs for policy analysis and evaluations in Korea.

The budget estimates shown in this statement include funds for the total set of activities under this project in Korea, East Lansing, and third countries. The proposed budget involves total funding of $697,753 from AID during the 1/1/75 to 6/30/76 period. The University proposes to allocate an additional $150,449 from other sources and to use $21,687 in AID funds reserved for movement of personnel from Korea following the termination of the Mission contract.

It will be necessary to allocate the total budget between central research funds and Bureau/Mission support. The budget shows a possible split based on the location and personnel and the proposed activities. There is a close relationship between the work applied directly to Korea and the research and development in East Lansing. The joint participation of TAB, Asia Bureau, USAID/Korea and the Korean Government in funding the extension remains to be worked out.

6. Plan of Work

Major activities to be emphasized during the extension are described briefly in this statement. A detailed explanation and justification is contained in the attached proposal for extension.

a. In Korea

Work in Korea will be organized to add and improve components to the existing model and to apply the model components to policy analysis problems. Details on the components, their present state and the plans for work and application during the extension are contained in the attached proposal. The main components are:

1) Input-Output component
2) Price adjustment and demand component
3) Recursive linear programming component
4) Population component
5) Livestock component
6) Grain management component
7) Crop yield component

Within the overall plan of work, emphasis will be given to the use of the model as a basis for preparing the Fourth Five-Year Development Plan for the Agricultural Sector and to the utilization of the Grain Management Component as a policy decision tool by the ROKG.

b. Methodological and Theoretical Work in East Lansing

Work will concentrate on further development of computer simulation models and components based on: (1) experience in using them under field conditions, and (2) advances in relevant theories and quantitative techniques from appropriate disciplines, and (3) incorporation of various specialized quantitative techniques from different relevant disciplines, especially economics and systems science. Specific areas in which methodological work will be concentrated are identified in the proposal for extension.

c. Training

The general objective is to further develop, improve and offer short-term and long-term training activities that will meet the needs of LDC's for manpower in this area of work. A specific objective is to fulfill training needs for the Korea institutions to develop the necessary expertise in the use, adaptation and further development of simulation models. While progress has been made, the National Agricultural Economics Institute and related agencies in Korea are not nearly fully staffed with trained personnel.

d. Software Library

The model components and computational routines developed in Korea and other locations will be generalized, documented and made available to other users with appropriate technical assistance. The library will be located in an appropriate international agency and the University will cooperate and assist in its organization and initial functioning.

7. Estimated Budget

(See page 8).

BUDGET

Line Items	Period 1/1/75 to 6/30/75	Period 7/1/75 to 6/30/76	Total 1/1/75 to 6/30/76
Expenditures			
Salaries	122,331	222,512	344,843
Consultants	1,000	0	1,000
Indirect Costs	60,304	108,202	168,506
Fringe Benefits	18,349	33,375	51,724
Travel/Trans.	27,719	60,031	87,750
Other Direct Costs	14,910	29,020	43,930
Total for Project	244,613	453,140	697,753
Total Other AID Work	---	21,687	21,687
Total Non-AID Work	---	150,449	150,449
Total Expenditures	244,613	625,276	869,889
Sources of Money			
Amendment 8 AID/csd-2975	84,203	---	84,203
New AID Funding TAB	89,830	232,500	322,330
USAID/Bureau &/or ROKG	70,580	220,640	291,220
Total this Ext.	160,410	453,140	613,550
Non-Budgeted AID Sources	---	21,687	21,687
Non-AID Sources Including MSU	---	150,449	150,449
Total for Program	244,613	625,276	869,889

8. Review of Progress and Project Appraisal

AID's continuing emphasis on agricultural sector analysis is concerned with the evaluation of the consequences of alternative policies, programs and projects on production and equity objectives. The MSU contract for adaptation of simulation models for agricultural sector analysis is an important element in our efforts to develop and test alternative methodologies in a context of application in actual sector planning situations. The need for tested quantitative techniques for sector planning is even more urgent as AID places greater emphasis on social development goals and more equitable sharing of the benefits of economic growth.

The present AID/csd-2975 contract on systems simulation evolved from the earlier AID/csd-1557 contract that was designed to develop a sector model for agricultural policy analysis. The objectives of the previous contract were conceptual and methodological rather than operational. It was developed with reference to Nigeria, but was not actually applied to agricultural sector analysis in that country. The current contract was designed to test and adapt the approach in an operational context. Korea was chosen as the site for full field testing of the systems-simulation methodology for policy analysis and programming in the agricultural sector.

The project was reviewed and evaluated during January - March 1974. The evaluation was carried out in anticipation of the proposal for extension which is now being considered. The evaluation was designed to measure the extent to which the project's objectives have been fulfilled in Korea, identify factors that have determined the degree of success of the approach, suggest steps that can be taken to extend and improve the system simulation technique, and identify the necessary conditions for transferring this approach to sector analysis to other LDCs.

The evaluation involved a team of six qualified professionals who prepared related but independent appraisals of the following elements of the overall project:

1) Capacity and utilization of the model in Korea,
2) The systems model,
3) Recursive linear programming component,
4) Grain management program component,
5) Population component,
6) Livestock component.

Copies of the six reports prepared by the evaluation team are attached to this appraisal report. The reports were reviewed and discussed at a two-day seminar held March 27-29, 1974.

The following persons participated in the seminar:

Michigan State University	Evaluation Team
Michael Abkin	Albert Brown
Tom Carroll	Wilfred Candler
Hartwig de Hahn	John Craig
Glenn Johnson	Richard Phillips
Thomas Manetsch	Jorgen Randers
Kim, Dong Min	Inderjit Singh
George Rossmiller	Alan Strout
Kim, Ho Tak	
Iowa State University	**AID**
William Merrill	Joel Bernstein
	Daniel Bromley
Government of Korea	Douglas Caton
	L. B. Fletcher
Kim, Dong Hi	Leon Hesser
	Lane Holdcroft
FAO	Donald McClelland
	Robert Morrow
Apostolos Condos	Richard Suttor

A. Adapting, Testing and Using the Computer Model

The MSU team claims that the initial Korean systems model of the agricultural sector was finished more quickly and at a lower cost than would have been possible without the prior model development for Nigeria. The evaluation provided some justification for this claim, although the general consensus was that the number of model elements adapted from the Nigerian project was small and that the main difficulty in using the transferred components was fitting them to Korean reality.

There was agreement that the model components developed for Korea, including social process structures as well as service routines, can be usefully adapted for other applications if they are well documented. This conclusion is reflected in the plans for software library development contained in the proposal for extension.

The initial Korean model was developed concurrently with an in-depth sectoral analysis of the Korean agricultural production and marketing systems. This sector study (KASS) was carried out under a companion Mission-funded contract with MSU (AID/ead-184). This contract required MSU to produce a broad comprehensive agricultural sector analysis and a report on investment priorities by mid-1972. These reports were completed on schedule and were well-received by the Mission, Government of Korea, and experienced professionals who have reviewed them. The sector model provided a quantitative framework and a computerized capacity for data organization and projection that were utilized in the KASS sector study.

Nevertheless, the evaluation did not determine that the computer analysis was essential for the sector study. This conclusion does not, of course, detract from the value of the sector study, and a number of its major recommendations have already been implemented.

The original model was regarded as insufficiently developed to generate surprising new insights into the development alternatives for Korean agriculture. Its main use was to make the extensive computations involved in analyzing exogenously assumed development patterns more efficient. Some conclusions of the model regarding the implications of alternative policies were rejected in the evaluation as depending upon particular formulations and parameter values that could not be validated with the necessary precision.

The evaluation concluded that the approach should be extended in Korea to produce a rich, flexible simulation model capable of generating results that can be directly useful to policy makers. It was agreed that with this additional effort the Korean simulation project will lead to a significant improvement in Korean agricultural planning capability. Priorities for model development and application, as contained in the proposal for extension, reflect the recent changes in the Korean economic environment. World grain prices have increased sharply, chemical fertilizer has become scarce and expensive, and declining industrial growth rates have reduced the ability of the Korean economy to finance food and raw material imports. The focus of the modeling effort and the array of alternative policy instruments to be used in attaining specified goals have been reviewed and adjusted to conform to the problems Korea is now facing. The emphasis in the proposal on the use of the model as a basis for preparing the Fourth Five-Year Plan (1977-1981) for the agricultural sector and on a grain management component for use by the government in domestic grain pricing and import programs is consistent with the intent to apply the multi-sectoral, multi-level approach to priority problems.

Some of the recommendations in the KASS report grew out of qualitative institutional studies including the appraisal of the National Agricultural Cooperative Federation and the paper on the organization of the MAF. One such recommendation was that the MAF concentrate on increasing the capacity of its personnel in key administrative and staff positions in performing functions related to policy analysis, agricultural outlook, and program and project evaluation. Mainly as a result of this recommendation, USAID/Korea and the Ministry developed an AID grant-funded project with the Ministry identified as the Korean Agricultural Planning Project. This project calls for the provision of three long-term technical assistance personnel to be stationed in the Ministry over a three-year project period in the areas of agricultural policy analysis, agricultural outlook, and program and project evaluation. In addition, short-term personnel as needed are to be provided in these three general areas plus the area of agricultural statistical collection and processing. During the course of project development the Ministry of Agriculture and Fisheries, with the concurrence of USAID/Korea, requested that MSU be the contractor for the

provision of the technical assistance called for under the project. In February 1974 a 3-year $700,000 contract was signed by MAF and MSU.

The KAPP activity is a logical step for MSU in Korea to help Korean personnel make more effective use of the KASS approach. In viewing KASS as the analytical backstopping agency for the KAPP personnel in the carrying out of their obligations and activities in the operational agencies of MAF, the opportunity and necessity for KASS interaction with the administrators and operational decision makers in MAF increases. Further, the pressures will be on the KAPP personnel to address relevant and high priority issues and through them this priority and pressure will be transmitted to KASS. Thus, the KASS analytical unit should have better linkage with decision-making processes and also should receive better feedback from the decision-making participants as to how the model components can provide even more useful analysis for policy purposes.

B. Training and Development of Korean Capability

The systems-simulation effort in Korea is carried out by a division of the National Agricultural Economics Institute (NAERI), a part of the Ministry of Agriculture and Forestry (MAF). Developing staff competence has been a continuing goal of the NAERI leadership and the MSU team. It involves finding, training and keeping talented people.

Due to the diversity of disciplines and abilities needed for successful application of the systems analysis approach to agricultural sector analysis, several types of training are needed to produce the requisite manpower resources. MSU has experimented with training involving three distinct subprograms which, in combination, can be used to produce a range of capabilities. The subprograms are: a Basic Study Program primarily for model builders and analysts, an Orientation course for policy-level administrators, and a Computer Programmer Study Program for personnel needed to program and operate model components.

Seven Koreans who worked with MSU personnel during the sector study and early stages of model development are currently studying at MSU. Their programs include M.S. and Ph.D. degrees in agricultural economics and systems science as well as the special one-year training course described above. Other Koreans are completing degree programs at other universities in the U.S. and third countries. A good deal of on-the-job training has been done by the MSU staff, and this informal training continues.

The evaluation identified a considerable need for further formal training, and for steps to attract and retain competent staff members at NAERI once they have been trained. The problem of adequate salaries is paramount in this connection. There is also need to create more prestige through greater recognition of the NAERI program and linkage to other key

Korean educational, research and planning institutions. Efforts to overcome manpower deficiencies and better establish NAERI as a recognized source of analysis for planning and policy are important elements in the project extension.

Further development of the specialized training courses is required. Provision for improved coordination between countries undertaking sector simulation projects and the training of personnel is needed. The means for funding a continuing training program must be found. Particular attention will be given to evaluation and further development of the training program during the proposed extension.

C. The Computer Library for Agricultural Systems Simulation

Under contracts AID/csd-1557 and AID/csd-2975, the Michigan State University (MSU) simulation team has developed and applied the generalized system simulation approach to agricultural development analysis and policy making. As part of that effort, a number of models have been built and computerized. These include, for example, models of production and processing processes; demand and consumption; demographic processes as applied to human, cattle and tree populations; commodity, regional and national accounting; resource allocation decisions; and the diffusion of innovations.

It has become clear that these and other processes are of general interest in the developing world and that generalized models of them could be documented and made available to help analyze similar problems in other countries. The use of a software library of such generalized models can greatly reduce the cost of conducting agricultural sector, subsector, policy, program and project analyses by: (1) facilitating application of the computerized system simulation approach incorporating a broad range of quantitative analytical techniques--e.g., LP models, econometric models, PERT models, state space models, etc.--to problems in LDCs; and (2) greatly reducing the likelihood of one team of workers going through the process of developing models which may be virtually identical to models already developed or being developed by another team in another place. For such a library to be effective, its prime concerns must include complete and clear documentation of each of its models and programming the models in a language which is acceptable to a wide range of computer models and sizes.

With this rationale, the initiation of development of such a software library (CLASS) was written into the first phase of the Project's AID contract, AID/csd-2975, and a Simulation Library Working Conference was held in March 1973 with representatives from national and international development assistance agencies, LDCs and relevant disciplines to get some idea of the potential demand for such a library and of how best to go about organizing it. The conferees concluded, briefly, that:

1) there is clearly a need for developing analytical capacity, particularly in LDCs, for policy and other decision making in development planning;

2) CLASS can contribute to the satisfaction of that need;

3) the library should be open to any analytical techniques which prove themselves useful;

4) a passive clearinghouse would not be sufficient, but rather complementary inputs, particularly expertise, need to be actively provided to successfully implement library components and make sure that they are not improperly used; and

5) such expertise is a major limiting resource and, therefore, training is a high priority, complementary activity.

In the near future, it will be essential that the library be closely associated with one or more organizations charged with model development, research and analysis applications, and training. In the short run, these broader functions are being partially carried out in fulfilling MSU's documentation obligations under its AID contract. However, once the research, development and field application testing have standardized the scope and procedures and as the library expands and acquires applications experience, it will be necessary that it move from MSU to a national or international development assistance agency.

The first meeting of the CLASS Policy Advisory Board was held at MSU on May 6-7, 1974. Major recommendations were that (1) an international conference of potential library users should be held in about May 1975 to introduce the library and services it can provide and (2) library personnel should concentrate over the next year on (a) including in the library a "critical mass" of KASS and Nigerian components to begin providing user services, and as a basis for a library services demonstration at the user conference indicated under point 1 above and (b) further development of the user simulation language for interaction with the library models. In addition, the extension requires that the library be located in an international agency before the end of 1975 and that MSU provide technical assistance for its operation in the initial phase.

D. Project Staffing by MSU

The evaluation team and the AID staff have high regard for the MSU personnel that has served on this project in East Lansing and in Seoul. The only staffing problem that developed was the lack of an experienced economist in Korea after 1972. This staffing deficiency was the primary cause for the criticism of the economic content of the models contained in the evaluation papers. The proposal contains a firm commitment from MSU to assign an experienced economist to lead the effort in Korea. This person is expected to begin his work before the end of 1974.

E. MSU's Continuing Role in Korea

The most important objective of the proposed extension of the contract is to build up Korean competence to develop and apply the agricultural sector simulation models as quickly as possible. To establish credibility with Korean policy-makers, the project will focus on several special purpose sub-models and on the use of the overall model structure for sector planning.

If a largely independent effort to establish the approach is to be made by Koreans, the Korean staff must have primary responsibility for applying the existing model and its components to current policy problems as rapidly as possible. The MSU involvement in the period of the extension should be largely restricted to model development, training, and software development for transfer to other LDCs. Although periodic MSU consultations will undoubtedly be needed after 1975, it is expected that long-term MSU personnel can be completely phased out of Korea during the period of the extension.

Attachments:
Project Proposal from MSU
Six Reports

September 6, 1974

Addendum

The proposal for extension of the contract on Adapting Simulation Models to Agricultural Sector Analysis with Michigan State University was discussed at the meeting of the Research and Institutional Grants Council held August 15, 1974. The discussion at the meeting centered on questions of substance raised in a memo from J. J. Dalton, the ASIA/TECH member of RIGC and on the division of budget support between TAB and ASIA. A committee has been formed to give further consideration to the questions raised in the Dalton memo. This committee will advise the Project Manager and University on a continuing basis in strengthening the work under the contract if the extension is approved. The sharing of funding is being resolved through discussions between the two Bureaus.

Project Review Report - RIGC (8/15/74)

Project: Adapting Simulation Models to Agricultural Sector Analysis - Michigan State University.

Project Manager: L. B. Fletcher, TA/AGR

Discussion Highlights:

Dr. L. B. Fletcher invited attention to the supplemental materials, namely, pages 9-15 of the Project Statement and six evaluation reports which had been delivered on August 14 to RIGC members. He then reviewed the history of this project from the original work in Nigeria under contract AID/csd 1557 through application of the simulation model in Korea in early FY 74 under contract AID/csd 2975. This work was evaluated and reviewed in a seminar held March 27-29, 1974. The proposed extension has the objectives of (1) improving the construction and content of the simulation model to increase its effective utilization in Korea; (2) continuing development of simulation work at MSU; (3) continuing training activities to develop trained manpower for Korean operation of the capability; and (4) development of the software library for wider international utilization.

J. J. Dalton, the ASIA/TECH member of RIGC, raised several questions about this project in his memorandum of August 15, 1974 to Dr. Erven J. Long, with copies to all RIGC members. Lee Fletcher stated that he agreed with Dalton Memorandum that the items (a) through (e) on page 2 needed to be addressed within the proposed 18 month contract extension. There is recognition by MSU that the staffing was not adequate after 6/72. Timing is important in providing evaluation work for policy problems in connection with the 4th 5-year plan now under development. The ROK needs component models e.g., grain management, and has made substantial commitment.

Dr. Long stated that delay in action on this proposal to the December RAC would introduce interruption to contract continuity. Possibly inputs to the project could be accomplished in line with Jim Dalton's suggestions in getting this proposal ready for the October RAC. Roy Mimms agreed stating that while the proposed extension does not cover the points raised, there is general agreement that delay is undesirable. However, there is a gap in the proposed funding in that the indicated contribution of $291,220 by the USAID/Bureau and/or ROKG is not provided for in any budget. Dr. Long agreed that this is an important operational matter. If the Mission cannot provide the necessary funds, can the project be viable with only TAB input?

Mr. Antonio Gayoso, AFR Bureau stated that the project pushes the state of the art, and that there is uneasiness because of the vagueness of specification of its applicability to other countries, particularly so if there is danger of loss of mission support. Charles Stockman indicated that the LA Bureau is interested in the project as an example of the diversity from which the Agency can benefit. They do support it and want it to continue, but are concerned about adequate support.

Burnie Merson raised the question about OLAB participation in this project formulation as previously discussed with TA/AGR. Raymond Malley, PPC, asked whether the objectives of the extension could be accomplished within the 18 minths proposed. Lee Fletcher stated that he believes that there will be some continuing need for support after that period.

Motion: That the proposed extension be approved, provided that the issues raised by Jim Dalton be addressed in the submission to RAC, and that a practical understanding on funding be clarified before the submission to RAC. Moved by Mimms, seconded by Stockman, approved unanimously.

9310536 (11)
PN-AAF-401

RPA 1-536
RAC Meeting
April 15-16, 1971

Motion: Deny the full project for now, but endorse the idea for later implementation. Provide planning money to each institution for 1971, to develop specific collaborative effort and coordinated work plans, local and U.S. budgets, host country financing and mission clearance or support. Bring these specific work plans back to RIGC and RAC at the earliest possible moment. A total of $75,000 may be provided to implement this decision, and small contracts may be entered into.

(The vote in favor of the motion was unanimous)

3. Adapting and Testing of Agricultural Simulation Model to Sector Analysis -- Michigan State University

Dr. Kirk presented the report of the review subcommittee consisting also of Drs. Hagen and Peterson. Dr. Smuckler left the room during the discussion of this proposal for reasons of conflict of interest. Dr. Kirk pointed out that while this was a new project it was in fact a proposal for a three-year continuation of an earlier four-year project. The basic objectives of the proposed new contract are to test, apply, and further develop under field conditions, the simulation model and components developed under the earlier project. The subcommittee members questioned whether the LDCs had adequate data either in scope or quality to support a total simulation model of the agricultural sector, and felt that the proposal gave too little attention to problems of data collection and correction. The subcommittee members also had doubts about the practical policy applications of a total model, but added that these doubts applied much less to the more manageable selected components of the model such as annual crops, perennial crops and livestock for which data may be better.

Dr. Kirk also reported that Dr. Hagen had asked some methodological questions about the model, such as whether certain important aspects have been omitted from the model, whether the assumptions concerning the "environment" which must be used as inputs or as parameters in the model are subject to such error to an extent which would adversely affect the conclusions derived from the model; and whether the calculations concerning relationships within the sector, necessary for policy decision, are sufficiently complex so that use of the model would result in a saving of both time and money. Dr. Kirk said that the subcommittee has been assured by the principal investigator and the A.I.D. staff that the model does in fact perform analyses that would be much more expensive in its absence and that these do provide realistic answers for decision-makers. He cautioned, however, that the "sensitivity" of the model should be given closer inspection.

Dr. Kirk said that despite their reservations, the subcommittee recommended approval of the project for at least two years. They did not favor deferring approval pending approval of a local AID Mission as proposed by the RIGC since this course would mean dissolving the present Michigan State team and reassembling it later; involving a waste of time, money and human resources. They also felt that the chances of useful results from this proposal were good.

In the discussion which followed, Dr. Linder pointed out that this model was a new tool and it was too early to assess its results. Dr. Coutu, in response to a question by Dr. Frank, said that local support and cooperation was basic to this study, discussed the problems of data availability and sensitivity of the model, and described the planned local linkages. Miss Belcher was hopeful that Nigeria could be used as a field site but said that a site visit there would present problems. Dr. Kirk said that any site visit voted by the RAC could be made to Michigan State rather than to the field.

Motion: Approval of funding of the first and second years at the level of $150,000 each year. Approval of the full second and third budgets proposed should depend on (a) acceptance of a full test of the simulation model by and with the cooperation of at least one government in a suitable LDC; (b) arrangements with the local AID mission acceptable to AID; and (c) a favorable report to AID and RAC of a site visit to be made in the first half of 1972.

(The vote in favor of the motion was unanimous.)

4. Cross-Cultural Research in Fertility Behavior -- American Institute for Research

Dr. Tanter presented a summary of the views of the review subcommittee which also included Drs. Montgomery and Kirk. The subcommittee members generally thought that this was a worthwhile project. They noted, however, that the design did not seem to provide for a systematic comparison of prostaglandin with other methods. Another potential problem with the design is that it expects to generalize from the abortion experience of developed countries to the LDCs. The subcommittee felt that certain budget items such as salaries and non-expendable equipment might be too high, but noted that no provision had been made for computer costs, and felt that the funds requested were too low to do field work in the number of countries indicated. The subcommittee members and the external reviewers also pointed out the difficulty of obtaining abortion data. In addition, there was a concern that the portion of the research relating to prostaglandins might be premature, since these have not yet been proved an acceptable and feasible method of birth con-

931053612
70-ADF-401

Dr. Kelley

OPTIONAL FORM NO. 10
MAY 1962 EDITION
GSA FPMR (41 CFR) 101-11.6

UNITED STATES GOVERNMENT

Memorandum

TO : See Distribution
Thru : TA/AGR, Omer J. Kelley

DATE: April 26, 1972

FROM : TA/AGR, Arthur J. Coutu

SUBJECT: Some issues for RAC review on AID/csd-2975 "Adapting and Testing of Agricultural Simulation Model to Sector Analysis"

AID's increased emphasis on agricultural sector analysis is concerned with more quantitative efforts to evaluate the effects of alternative policies and programs on production and equity goals. The MSU contract on simulation is one of AID's efforts on conceptual and methodological issues in sector analysis as well as on applied research designed to adapt a simulation approach to agricultural sector analysis.

The present AID/csd-2975 contract on simulation evolved from an earlier AID/csd-1557 contract that was designed to develop a simulator for agricultural policy analysis. The present contract was designed to test and adapt the original work to actual operating conditions.

The general purpose of the present research review is to assess progress on AID/csd-2975 or in adapting a simulation approach to agricultural sector analyses in Korea and Nigeria. Further, the review is designed to meet a RAC requirement for full financial support of the research activity. The motion of RAC of 4/15/71 recommending approval of the research project reads as follows:

Motion: Approval of funding of the first and second years at the level of $150,000 each year. Approval of the full second and third budgets proposed should depend on (a) acceptance of a full test of the simulation model by and with the cooperation of at least one government in a suitable LDC; (b) arrangements with the local AID mission acceptable to AID; and (c) a favorable report to AID and RAC of a site visit to be made in the first half of 1972.

Buy U.S. Savings Bonds Regularly on the Payroll Savings Plan

Some issues that should be addressed during the review are:

1. How realistic was the basic assumption that the generalized simulation approach developed under AID/csd-1557, with a set of components, could be adapted or operationalized in an LDC with indigenous colleagues?

2. How important in adapting a simulation approach is the system that has been tried in Korea where a sector study was tied into the overall research objectives of adapting the simulator?

3. What evidence is there that the data and human resource requirements are adequate in Korea and Nigeria to adapt a generalized simulation approach to policy and program analyses?

4. What are the sensitive points of relationships among USAID, GOK and the contractor? Are there or are there not problems that need to be resolved by AID/W or some other entity?

5. What changes, if any, are needed to improve the installation of this research capacity as an on-going function of the GOK training programs? Relationships within Korea? Salary etc. for the Korean counterparts to insure long term availability? The continued presence of one or two U.S. specialists? Or, consulting relationships to Seoul or from Seoul to East Lansing and/or elsewhere in the U.S.?

6. Given the progress to date on this sector analysis research project what other suggestions can be made to strengthen the total effort?

Distribution:

TA/AGR O. Kelley
TA/AGR M. Cox
TA/AGR H. Jensen
TA/RUR E. Long
NESA/DP J. Brown
LA/DA R. Suter

Dr. V. Ruttan, U. of Minnesota
Dr. T. Naylor, Duke University
Dr. C. Frank, Princeton University
Dr. G. Johnson, Michigan State U.

Proj. No. 9310 5[illegible] (3)
PN PD-AAF-401

PROJECT SUMMARY

31p

Project Title : Adapting and Testing of Agricultural Simulation Model to Sector Analysis

Contractor : Michigan State University

Contract Number : New Project

Project Number :

Project Duration: Started: 7/1971
Termination Date: 6/1974

Comments : Three year projection

Budget

Funds requested for FY 71	$150,000
Funds requested for FY 72	310,000
Funds requested for FY 73	300,000
TOTAL FUNDS REQUESTED	$760,000

TA/AGF Project Monitor: Dr. A. J. Coutu

Narrative: The basic purpose is to test an important innovation in sector analysis by operationalizing in selected countries. The application of the simulation innovation allows the planner to make more accurate estimates of the future consequences of following alternative policies, programs and projects. The proposal is analagous to the idea of field testing a new innovation such as a new variety, a small scale machine or a new set of fertilizer mixes. More specifically the operationalizing will allow: (1) An adaptation of the total agricultural sector simulation in and with indigenous colleagues in Nigeria and Korea or another location desiring a test of the total model; (2) An adaptation of selected components of the model (annual crops, perenial crops or livestock) in Philippines, Colombia, Brazil, Korea or other locations desiring an emphasis in a single area but with capacity to estimate aggregate consequences of alternatives; (3) To train indigenous colleagues in the use and application of the total model or its components; and (4) To develop a library which make the model and its components available on a national and international basis to external aid agencies and host countries.

PROJECT SUMMARY

Justification: The need is apparent for more effective use of scarce human and financial resources in both the developing countries and in countries and agencies endeavoring to assist the LDC's. The following was stated in a recent report to the President by the Secretary of Agriculture, and the Administrator of AID.

> Taking account of the most urgent requirements of the less developed countries, we recommend the following measures for applying American experience and capabilities to the task of improving food production and distribution in those countries: . . . .
>
> (4) Emphasis on development of institutional competence of central governments, especially ministries of agriculture, to plan and manage agricultural programs, and to provide supporting services to the agricultural sector.[1]

Policy, program, and project design, planning, analysis, and evaluation require projection and analysis of the consequence in terms of a multiplicity of "goods" being sought and of "bads" being avoided of following alternative policies, programs and projects.

Past analysis and projection procedures have included a sequence of steps. Policy analysts, program officers and project evaluators have excercised considerable ingenuity and originality in designing new and in the recalling of previously-considered, open alternatives. Projections have then been developed to display the consequences through time of following the various open alternatives. On occasion these projections have been on a national or even world basis. Attention has also been focused on studies of individual sectors such as agriculture and projects such as construction of a specific irrigation facility. Thus, in addition to geographic and commodity dimensions, the focus has also varied from policy to programs to projects.

In the U.S. government both at home and abroad, in Western Europe, in the Soviet Union, in FAO and in IBRD, the projections have been made, historically, mainly as paper and pencil, desk calculator exercises. At the micro-level many such projections are used in appraising both rural and urban property and in soil conservation project planning at the individual levels. At the federal level

[1] Clifford M. Hardin and John A. Hannah, Improving Food Production and Distribution: Report to the President, U.S. Department of Agriculture and the Agency for International Development, February 19, 1970.

in the U.S., they have been used in developing TVA, in the Bureau of the Budget and by the President's Council of Economic Advisors. As such they were understandable to both the analysts, program officers and evaluators making them and to the decision makers, administrators and legislators using them. This understandability has often led in turn to desirable interactions between policy, program and project investigators, on one hand, and decision makers, on the other.

In addition to focusing the joint originality and creativity of investigators and decision makers on the task of conceiving of new or additional alternatives, these interactions have often helped to establish three preconditions for selection of a "right" or better as opposed to a "wrong" or worse policy, program, or project from among the alternatives.[2] These three preconditions, which are formally or mathematically required in order for a "best" alternative to exist, are: a common denominator among the multiple "goods" being sought and the multiple "bads" being avoided to permit the difference to be maximized (the common denominator must possess interpersonal validity if some of the alternatives impose damages on one or more people in order to confer benefits on others).[3] (2) a known best "order" in which actions within an alternative are to be taken so as to guarantee that comparisons among the alternatives can result in selection of the best, and finally, (3) an "agreed on" rule, in the universal presence of imperfect knowledge, for selecting the best among alternatives, the possible rules ranging over such alternatives as the minimum cost/benefit ratio, the maximum average net benefit over time, the maximum present value of the future stream of net benefits, etc.[4] Though the three preconditions have seldom been met in a completely satisfactory manner, they have generally been met more adequately after interactions than in the absence of such interactions. Many linear programming, recursive programming, budget exercises, cost/benefit and other maximizing computations have been made in the absence of the three necessary preconditions and have not provided for this interaction to more fully attain them. The result has often been unrealistic conclusions as to the "best" or right policy program or project to adopt and, hence, frequent rejection of the conclusions by the decision makers.

---

[3] M. W. Reder, Studies in the Theory of Welfare Economics, Columbia University Press, New York, 1947.

[2] C. I. Lewis' distinction between good and bad, on one hand, and right and wrong, on the other is followed herein. See C. I. Lewis, The Ground and Nature of the Right, Columbia University Press, New York, 1955.

[4] Kenneth Arrow, Social Choice and Individual Values, John Wiley and Sons, New York, 1951.

The Consortium for the Study of Nigerian Rural Development (CSNRD) followed the customary procedure of first determining alternatives, second, making paper and pencil, desk calculator projections and, finally, interacting with USAID/Lagos and host country personnel. Given the Nigerian civil war, the interaction was fairly good and many of the policy and program recommendations were fairly accurate and acceptable, particularly to AID decision makers with whom the interaction was best.[5]

While the Consortium experience was only illustrative of a vast number of more or less satisfactory FAO, USAID and IBRD country mission, sectoral and project feasibility studies, it did lead to the recognition that:

1. Pen and pencil, desk calculator computations have been overtaken by the less intuitive, more formal analyses made practical by computational efficiency of modern computers,

2. Three steps are required to formalize the historically proven process of making projections. They are:

   (a) Construction of better, mathematically more explicit models,

   (b) Testing, application and further development of such models on problems in decision-making arenas of the real world,

   (c) The establishment of orderly access to mathematical formulations of the models and their components.

3. Interaction between investigators and decision makers will continue to be an indispensable part of policy, program and project development and evaluation despite formalization and computerization of calculations.

AID/csd 1557 took the first of the above three steps for agricultural sector models - it provided MSU with the means of developing a systematic and specific computer simulation model of an agricultural sector of a major underdeveloped country. Though that contract did not specify that Nigeria's agricultural economy be the one modeled, the contractor elected to model Nigeria largely because of the (1) on-campus presence of over 60 man years of Nigerian experience, (2) the CSNRD organization which provided access to additional man years of experience at Kansas State University, The University of Wisconsin, Colorado State University, the U.S. Department of Agriculture and the U.S. Department of Interior. MSU had no contractual obligations to make applications in Nigeria or anywhere under AID/csd 1557.

---

[5] G. L. Johnson; O. J. Scoville; G. K. Dike; Carl Eicher; Strategies and Recommendations for Nigerian Rural Development, 1969/1985, CSNRD 33, July 1969, Michigan State University, East Lansing, Michigan.

The simulation model which was developed for Nigeria under AID/csd 1557 is diagrammed in Figure 1. It was designed primarily as an agricultural sector model for use in appraising policy changes. However, it was constructed on "the building block" principle.[6] Thus, it has components for annual cash crops, annual food crops, perennial export tree crops, and livestock. Further, it deals with agricultural research, extension and education, transportation, interregional domestic trade, export earnings, population, domestic consumption, taxation, foreign trade and provides for transactions between the farm and, in a rudimentary way, the non-farm sector. See Figures 2 and 3. In turn, each of these components is constructed of sub-components or building blocks, some of which are used repeatedly in different components. For example, essentially the same demographic sub-component is used for modeling the people, cattle, palm tree, cocoa tree and rubber tree populations. It is this building block characteristic of the MSU agricultural sector model which makes it and its components flexible and adaptable to a wide variety of circumstances, i. e. in different countries and at policy, program and project levels.

With the three year program of work under AID/csd 1557 terminating on March 31, 1971, it is time to make operational the simulation model and components developed thereunder. Thus, the basis objective of this contract proposal is to test, apply and further develop, under field conditions, the simulation model (and components) developed under AID/csd 1557 with the end in view of increasing the usefulness and of lowering the cost of policy, program and project development and evaluation.

Specific Objectives:

1. To test, adapt, extend and use the computer simulation model developed under AID/csd 1557 in the context of Nigeria or other country in designing, developing, and evaluating selected policies, programs and projects. This will be done with host country, third country and international agencies as opportunities and needs arise and as mutually agreed to by TAB/AID/W and the contractor.

---

[6] A. N. Halter, M. L. Hayenga and T. J. Manetsch; "Simulating a Developing Agricultural Economy: Methodology and Planning Capability," American Journal of Agricultural Economics, Vol. 52, No. 2, May, 1970.

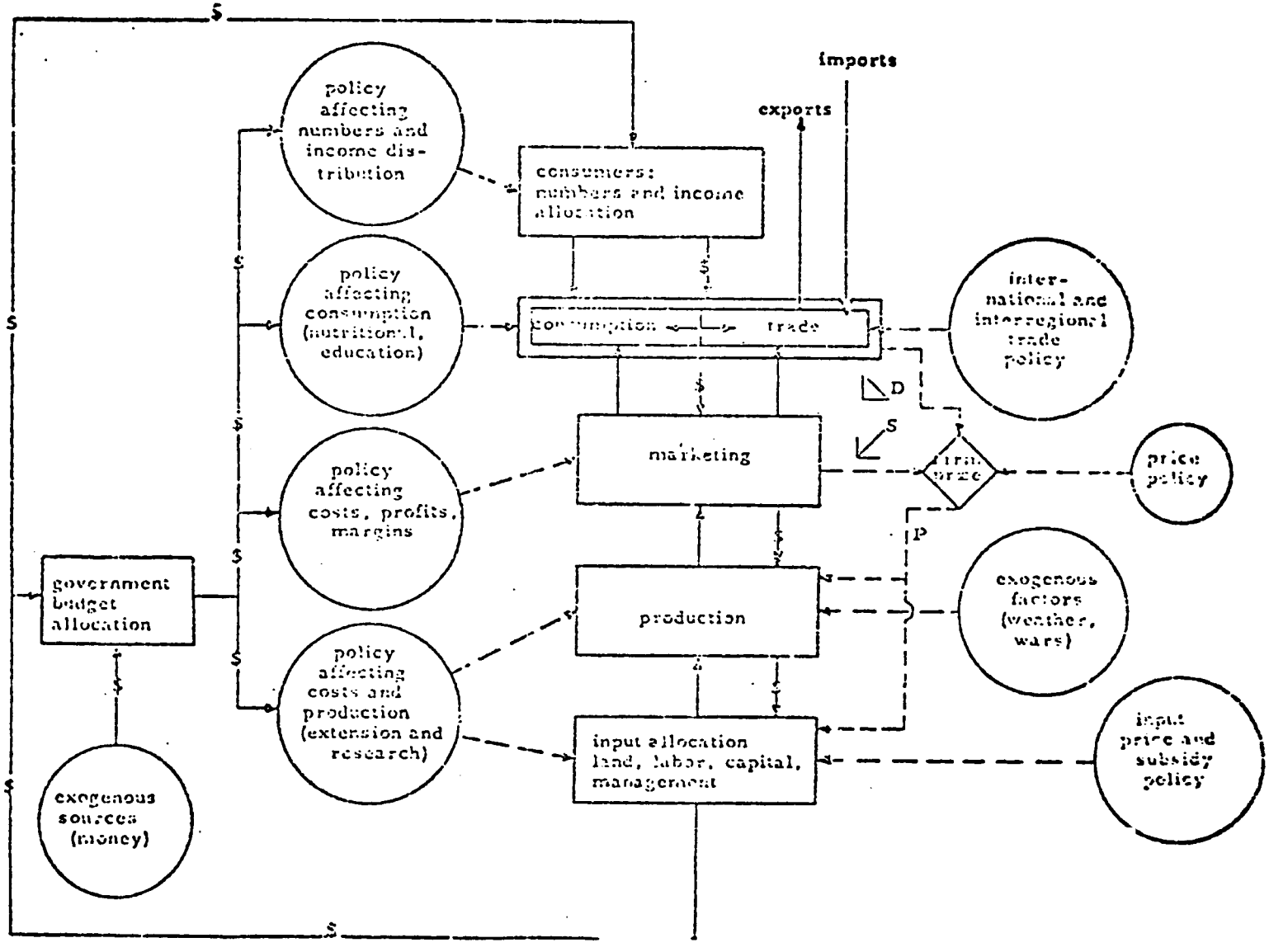

Basic components of development model with main material, money, price, and regulation (information) flows

Figure 2.

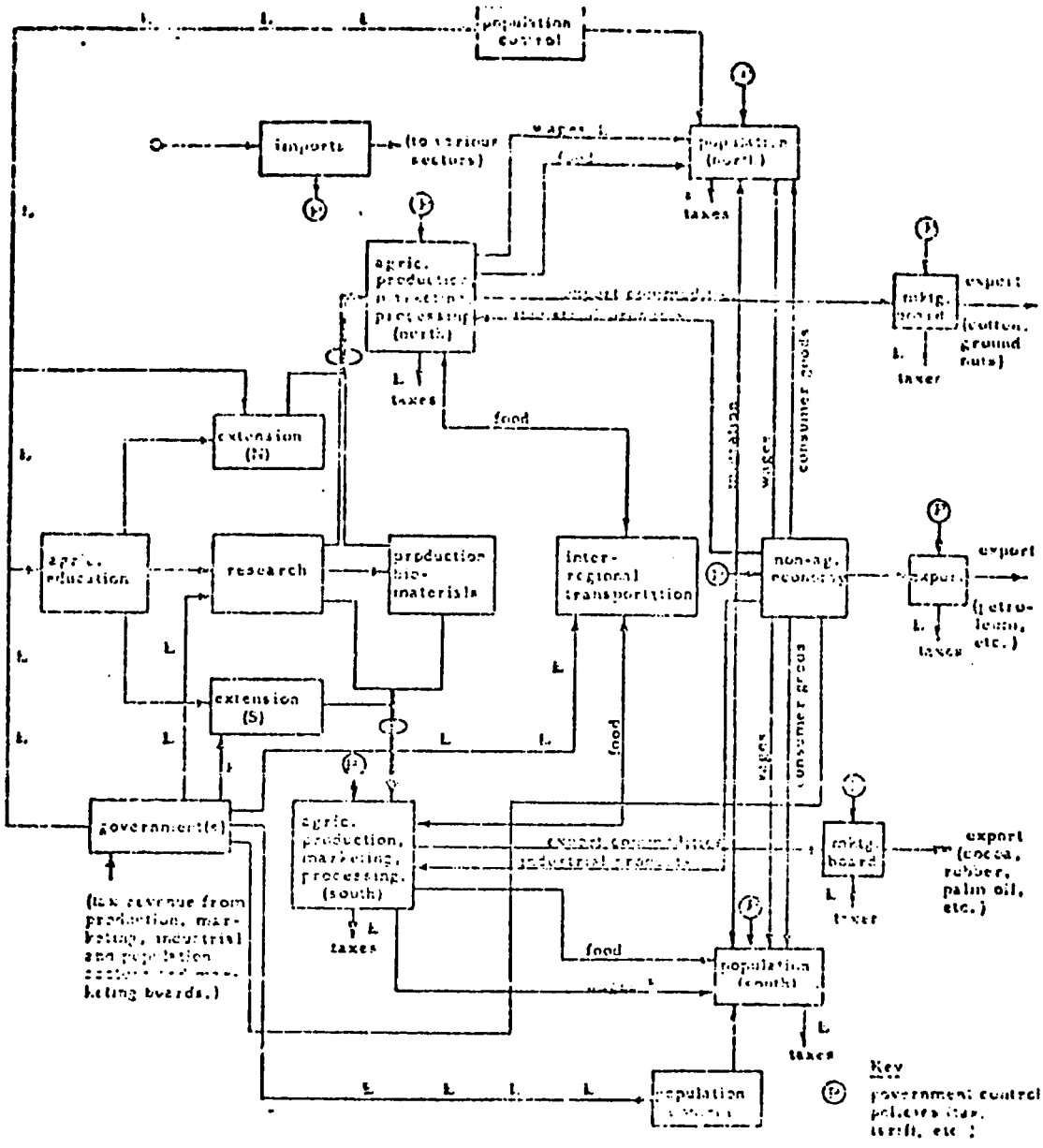

Figure 1. Major sector and flows of a simulation model of the Nigerian Economy

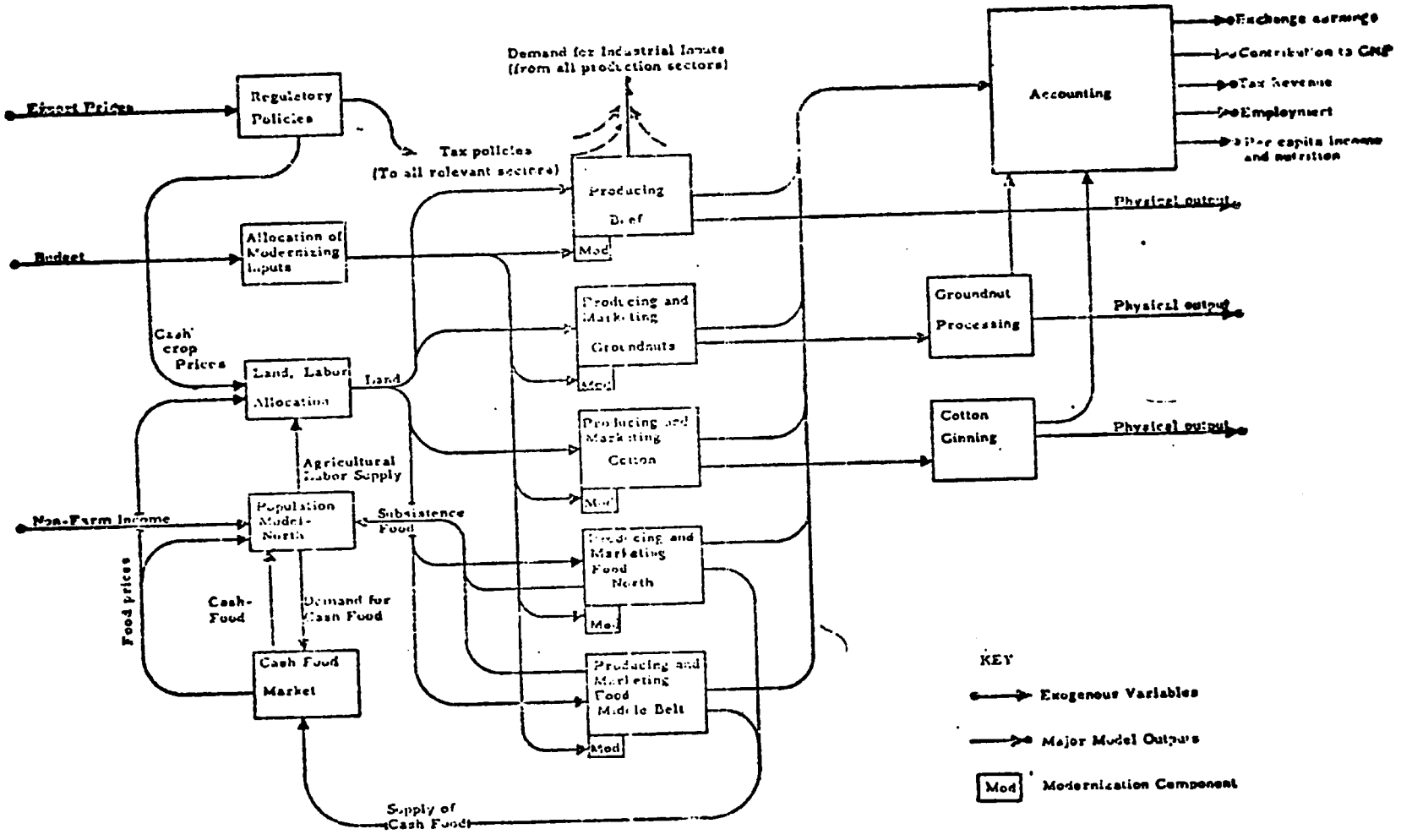

Major sectors and interactions of the Northern Nigerian agricultural model

Figure 3.

In accomplishing this objective, emphasis will be placed on first establishing linkages with indigenous institutions and second on establishing their capacity to use computerized simulation models to design, analyze, and evaluate their own policies, programs and projects. Some preliminary discussions have been held with Bureau and Mission personnel on operationalizing the total model in Nigeria, Korea and Indonesia. There are numerous country locations where not more than two components of the simulation model could be applied such as the tree crop component (West Africa, Indonesia, Thailand), livestock component is (Columbia, Brazil, Philippines), annual crop component on rice or wheat (Philippines, Pakistan, Korea).

2. To test, adopt, extend and use the computer simulation model developed under AID/csd 1557 in designing, developing, analyzing and studying, and/or in evaluating selected programs and projects for AID/W and/or USAID Missions in countries mutually selected by AID/W and the contractor. Here again strong emphasis will be placed on developing institutional linkages between U.S. agencies and U.S. universities to increase capacity to design, analyze and evaluate policies, programs and projects. The possible country situations are numerous, but consideration might be given to Thailand, Brazil, Columbia and East Africa.

3. To establish a software library, initially at MSU, but perhaps to be transferred later to the proposed IDI of AID. The various mathematical models and computational routines referred to here as "software" should be placed in one or more of the standard computer languages indexed and made available to "borrowers" with appropriate explanations. This will involve generalization of existing components and the provision of a higher order simulation language for the integration and combination of components into configurations required in various institutional and geographic contexts. Such an arrangement is needed to make the model components available on a national and international basis to potential users in donor, lender and host country agencies.

At subsequent times, decisions will have to be reached concerning whether or not users will be charged and on how operating and capital costs would be covered wherever the library is finally located. Such decisions are best delayed until experience is gained concerning the nature and extent of use by different agencies at MSU. The Computer Institute for Social Science Research at MSU will be particularly useful in establishing the software library.

4. To further develop the computer simulation model on the basis of experiences in using it under field conditions. A number of extensions and and modifications may be needed. These may include the incorporation of PERT (critical path analysis), the incorporation of further development in the theory of investment and disinvestment as related to supply responses and the solution of certain aggregation problems, the incorporation of PPBS (Planning, Programming, and Budgeting Systems) and PERT techniques, and the use of various decision rules in estimating entrepreneurial and consumer behavior.[7]

5. To train personnel from host country, donor, and lender agencies in the use, adaptation and further development of computer simulation models. Initially this will be done concomittantly with and as part of attaining objectives (1), (2) and (3) and as part of the contractors regular educational program. This training activity will be important in establishing the international and national linkages and capacities to use computer simulations in designing, analyzing and evaluating developmental policies, programs, and projects. Special training programs at either off-campus or on-campus locations are envisioned.

Methodology:

The methodology to be employed under this contract is fundamentally the same as the methodology employed under AID/csd 1557.[8] However, it will be extended to carry out the subsequent steps described in "justification" above. That methodology employs the "building block" approach to constructing simulation models. In the "building block" approach, components of a computer simulation model are built and tested, one component at a time. These components are then assembled into larger sub-sectoral components which are also tested. These, in turn, are combined into a sectoral model for, say, all of agriculture in a country such as Nigeria or Korea.

[7]The contractor (MSU) has a number of academic and disciplinary research projects and activities which will contribute to further development of the theory and the use of specific techniques. These are in the Computer Institute for Social Science Research (CISSR), the Department of System Science, and in the Department of Agricultural Economics. Included is an arrangement among leading U.S. and European agricultural economists to develop investment and disinvestment theory in relation to supply response and growth in productive capacity.
In addition, the contractor has a large $600,000 NSF grant to study enviromental quality problems. This study will involve computer simulation work which is likely t complement work under this contract by providing the means for helping to evaluate th environmental consequences of developmental strategies.

[8]Halter, et. al., op. cit.

In this contract the sub-components, components and sectoral models will be applied to particular geographic locations and to policy, program and project problems. As such applications reveal deficiences in the components, sub-sectoral models and sectoral models the process employed in AID/csd 1557 will have to be repeated in order to improve on the components. As this is done, the methodology used in AID/csd 1557 will be extended to include discussions and interactions with the relevant decision makers in order to establish the three necessary preconditions discussed above. The methodology, in this connection, will be normative as well as positive or non-normative. The criteria for verification of the sectoral model or its components will include (1) logical, internal consistency of the model, (2) consistency of the model with other formulations based on independent information, as reflected in ability to "predict and to track reality," (3) the clarity of the model and the capacity of other people interested to understand it or use its results and (4) the workability of the model when used to solve real-world policy, program, and project problems and when subjected to sensitivity tests. The use of sensitivity tests will relate the workability of the model and its components to inaccuracies and deficiencies in data. These tests will be useful both in interpreting results and in formulating recommendations as to procurement and processing of primary data.

As the preconditions for maximization are met, additional maximizing components will be incorporated in the model. An example of such an incorporation is found in AID/csd 1557 where a recursive, quadratic programming component is used in maximizing gains from reallocating production and consumption of beef among regions of a country in response to transportation investments.

Computer experiments will be used from time to time to gain a better understanding of the workability of various proposed policy, program, and project alternatives. Replication of these should prove useful in estimating the effects on performance of probability distributions of weather, price and other variables.

Plan of Work:

1. First Year

   A. A country will be selected by mutual agreement of TAB/AID/W, the country mission and/or host country administrators and the contractor. For this

country the AID/csd 1557 model will be used in starting an agricultural sector study for completion in the second year. This study could be done for the benefit of either the host country and/or USAID Mission in the country.

Heavy emphasis will be placed, as feasible, on forging institutional relationships with agencies in host countries.

B. The contractor will be responsive within the present rather stringent financial and personnel constraints of this contract, to USAID, AID, host country and international donor or lender agency requests for assistance in program and project development and evaluation.

C. Work will be started on the software library. The timing and extent of this work will be conditioned by when work is started on A and B.

Aside from the effect of such work on availability of project personnel and money to devote to the software library, work on A and B will help indicate how the library should be organized.

2. Second Year

A. Either a host country or USAID Mission agricultural sector study will be completed.

B. One program or project study should be completed.

C. Additional sector policy, program and project studies will be initiated.

D. The software library will be approaching operational readiness.

3. Third Year

A. The contractor will, hopefully, have developed a host country or agency capacity to use, apply and further develop computer simulation models as it phases out of one or more studies.

B. The contractor will be increasingly responsive to requests from host countries, USAID missions, AID/W and international donor and lender agencies for research assistance and training programs. If these responses are of sufficient volume, the question will have to be raised as to whether the contractors function should be continued, transferred to IDI or dispersed via training programs to potential users domestically and abroad.

C. The software library should be operating and continuing to develop and the questions should be answered concerning its more ultimate nature, organization and location.

Budget

The contractor will provide an average of four professional man years per year for three years. Associated with them will be five graduate assistants, clerical and stenographic help, and computer programmers. Three man years of the contractors professional personnel would be in the countries of applications as well as another man year of a programmer. Also the contractor would provide support for cooperating country personnel at the professional and non-professional level. For host counry professionals, field staff, non-professional, host country participants and USAID or donor agency personnel would be covered by supplemental agreement for each sub project.

Budget for FY 71, FY 72, FY 73 and total

ITEM	FY 71	FY 72	FY 73	TOTAL
Salaries	70,000 1/	160,000 2/	160,000 2/	390,000
Consultants	5,000	10,000	5,000	20,000
Fringe Benefits(15%)	10,500	26,000	25,000	61,500
Overhead 3/	36,800	79,400	79,000	195,200
Travel & Transportation	4,000	5,000	5,000	14,000 4/
Allowances				5/
Other Direct Costs	15,700	25,600	22,000	63,300
Equipment	8,000	4,000	4,000	16,000
Participant Training				6/
TOTAL	150,000	310,000	300,000	760,000

1/ Includes home office professional $20,000, home office non-professional including two graduate students $20,000 and field staff professional $30,000. Cooperating nationals would be covered by supplemental agreements for each host country project.

2/ Includes home office professional $30,000, home office non-professional including three graduate students $30,000 and field staff professional in three locations including programmer $100,000. Cooperating nationals would be covered by supplemental agreements for each host country project.

3/ Overhead is calculated at 62% for on campus and 40% for off campus personnel

4/ Just U.S. travel with international travel to be covered by supplemental agreement for each host country project.

5/ To be covered by supplemental agreement for each host country project.

6/ Except for 3 U.S. graduate students included under salary other participants to be covered by supplemental agreement for each host country project.

TA/AGF:AJCoutu:jn:2/23/71

Approved for submission to RIGC:

TA/AGF, Director: Omer J. Kelley

TA/AGF, Agr. Ec. & Sector Planning Division: Arthur Coutu

PROJECT SUMMARY

Title: Adapting and Testing of Agricultural Simulation Model to Sector Analysis
Contract: Michigan State University
Investigators: Dr. G. Johnson and Simulation Staff
Duration: 3 years beginning FY 71
Estimated Cost: Total $760,000
FY 71 150,000
FY 72 310,000
FY 73 300,000

Project Manager: Dr. A. J. Coutu
Purpose: The basic purpose is to test an important innovation in sector analysis by operationalizing in selected countries. The application of the simulation innovation allows the planner to make more accurate estimates of the future consequences of following alternative policies, programs and projects. The proposal is analagous to the idea of field testing a new innovation such as a new variety, a small scale machine or a new set of fertilizer mixes. More specifically the operationalizing will allow: (1) an adaptation of the total agricultural sector simulation in and with indigenous colleagues in Nigeria or another location desiring a test of the total model; (2) an adaptation of selected components of the model (annual crops, perenial crops or livestock) in Philippines, Colombia, Brazil, Korea or other locations desiring an emphasis in a single area but with capacity to estimate aggregate consequences of alternatives; (3) to train indigenous colleagues in the use and application of the total model or its components; and (4) to develop a library which make the model and its components available on a national and international basis to external aid agencies and host countries.
Description: In 1967 AID contracted with Michigan State to attempt the development of an micro-macro agricultural planning model for rural development analysis. There was no requirement to operationalize the construct or a country specified for the experimental work. However, with the contractors extensive experience in Nigeria the empirical aspect of the contract used data on the Nigerian economy.

In project reviews held in January, 1970 and with the African Bureau in December, 1970, the progress in the construct and the usefulness of the simulation model was demonstrated Additional testing of the model, refinements in data values, preparation of final reports (technical report on the simulation and a more popular version on possible applicability) is now underway in completion of AID/csd 1557 contract scheduled for March 31, 1971.

This planning innovation has involved a building block approach in which sector and sub-sector components are intergrated into an aggregation model for the economics system. This approach to the simulation innovation permits an operational test of the total model or applicability of specific components.

TA/AGF:AJCoutu:jn:2/18/71

FILE COPY

RESEARCH PROJECT STATEMENT

August 2, 1974

PROJECT: "Adapting Simulation Models to Agricultural Sector Analysis", Contract AID/csd-2975

1. Summary of Extension

Contractor: Michigan State University

Principal Investigators: Professors George E. Rossmiller and Glenn L. Johnson, Department of Agricultural Economics, Michigan State University, East Lansing, Michigan

Duration of Extension: 18 months ending June 30, 1976

Estimated Total Cost of Extension: $697,753 a/

Funding by Fiscal Years: FY 1975 $244,613 b/
FY 1976 $453,140 a/ c/

Project Manager: L. B. Fletcher

This project addresses the continuing urgent need of LDC governments for efficient and flexible quantitative methodologies for analyzing alternati agricultural development strategies and determining priorities for polic programs, and projects in their rural sectors. Its purpose is to design and test simulation models for practical application in agricultural sector analysis. Its scope includes the construction of generalized, computerized systems simulation models; application and testing of the approach in Korea; development of a software library to facilitate transfer of the approach to other LDC's; and the organization of a training program to strengthen the capacity of planners and policymakers in LDC's to apply and use the approach.

The most important objective of the extension is to build as rapidly as possible the Korean capacity to further develop, manage and apply the sector simulation approach. The software library will be expanded by including generalized and documented model components and computational routines and transferred to one or more international agencies for further development and operation. The training program will focus on technical personnel and policymakers from LDC's to create capacity to adapt and apply computer simulation models and competence to utilize the results for development planning and programming.

---

a/ Represents total requested additional funding for AID support. Division between research funding and Mission/bureau support for work in Korea will have to be worked out by TAB and USAID/Asia Bureau.

b/ Funding for 6 months 1/1/75 to 6/30/75 only. Funding for 7/1/74 to 12/31/74 already provided by TAB and USAID/Korea.

c/ Only represents AID funding. Additional funding expected from non-AID source

2. Research Purpose and Expected Results

The basic objective of this project is to test, apply and further develop, under actual LDC conditions, the computerized systems-simulation model approach to agricultural sector analysis. This objective was established for the purpose of increasing the effectiveness and lowering the cost of policy analysis for program and project formulation and evaluation in LDC's.

To accomplish this objective, the project places emphasis on the following:

a. Further adaptation and design of the approach on the basis of experience using it under field conditions;

b. Development of the capacity to use computerized simulation models to analyze and evaluate agricultural policies, programs and projects in LDC's;

c. Organization of a software library, located initially at MSU but to be transferred later to an international agency, to make model components and computational routines available for LDC utilization;

d. Training of technical personnel from LDC's in the application, adaptation and further development of system simulation models and LDC policymakers in the use of the results for the design, analysis and evaluation of development policies, programs and projects.

This project deals directly with the key problem of improving the capabilities of LDC's for policy analysis and development planning with emphasis on agricultural and rural development problems. It makes use of quantitative systems models to assist policy makers in making better decisions on priorities at the national, regional, sector and subsector levels. Korea was selected as the main location to test the approach. Related activities have involved Nigeria, Colombia and Venezuela.

a) Further research and development work on the design and application of generalized systems models interfaced with specialized components designed for subsector and subnational program and project evaluation;

b) Creation of an institutional base and manpower resources in Korea to apply, utilize and extend the specialized components and overall sector model;

c) Generalization and documentation of the model components and computational routines developed in Korea and establishment of an operating software library in an international agency;

d) Operation of a training program at Michigan State University and in LDC's to increase the capacity to use computerized system-simulation models in policy analysis and planning.

3. Significance of the Research

During the first three-year period, this project demonstrated the usefulness of the systems simulation approach for sector planning in Korea.[1/] The Korean application was based on the earlier model developed for but not applied in Nigeria which was constructed under Project AID/csd-1557. Other activities of this project at the subsectoral level have involved Nigeria, Colombia and Venezuela.

AID continues to assign high priority to the development of methodologies and creation of capability in LDC's for policy and program analysis. This project is a significant element in AID's research and technical assistance activities that address this key problem area. The need is great and interest is high in LDC's for further adaptation and testing of quantitative approaches for analyzing policy alternatives and evaluating program and project proposals at the national, regional, sectoral and subsectoral levels.

The application in Korea was useful in itself but also because of what it has revealed about the problems in theory, technique, data, and institutional capacity which must be overcome to expand the efficient utilization of the approach in practical development programming. These problems are discussed further in the evaluation papers attached to this statement and are summarized in the project appraisal contained in Section 8 of this statement.

The continued development and application of the systems simulation approach for policy analysis, program formulation and project selection is the basic objective of this extension. The need is to improve the construction and content of the simulation models and increase their potential for efficient and effective utilization. Actual use has revealed deficiencies in model structure and operational capabilities that can be remedied through continued research and development activities. Specialized components involving recursive linear programming, input-output tables and econometric analyses, can be interfaced with the overall systems model. The approach can be extended to include specific regional, development and project appraisal applications. More adequate, accurate and relevant data can be incorporated into model design and parameter estimates.

1/ Rossmiller, G. E., et al., Korean Agricultural Sector Analysis and Recommended Development Strategies, 1971-1985. Ministry of Agriculture and Fisheries, Seoul, Korea, East Lansing, Michigan. 1972.

Experience has also elucidated the necessary conditions for institutionalizing an analytical capacity based on the approach to strengthen the policy analysis and decision process at various levels of government. Trained manpower, budget allocations and an institutional base are necessary but not sufficient. Interaction of analysts with policymakers and appreciation by policymakers of the nature and usefulness of the results are also required for efficient and effective application.

The intellectual capital created by the research and development efforts and the application in Korea should be documented and made readily available to other potential users. This is the purpose of the software library. Additional use depends on the capacity of planning personnel and policymakers in other LDC's to understand, develop and apply the approach. The training program will help to satisfy this vital training requirement.

4. International Linkage and Utilization

Through a series of seminars sponsored by the Research and Training Network, which is operated by the Agricultural Development Council under Contract AID/csd-2813, the systems simulation approach has been compared and contrasted to other approaches that have been followed in agricultural sector analysis. This evaluation of experience is expected to continue through an international program of documentation and evaluation of alternative approaches to sector analysis that has been initiated by FAO in collaboration with AID and IBRD. This program should be extremely relevant and useful to LDC's in the process of designing and implementing programs to develop their capabilities for utilizing quantitative sector modeling approaches.

Project members have participated in numerous international conferences and meetings. These activities have led to widespread recognition by LDC and USAID personnel of the potential for the approach for improving sector analysis and planning.

In Korea, the major effort has been to utilize the approach for developing, testing and utilizing a working simulation model. The Korea model was successfully applied as an analytical tool in the policy planning and decision process. Specific usage included assessment of benefits from an expanded agricultural research program and projections used for a Long-term Agricultural Development Plan. The extension will permit the model to be extended and improved. It will be utilized as the basis for preparing the Fourth Five-Year Korean Development Plan for the Agricultural sector and for policy analysis and guidance in a number of subsectoral areas. This expected utilization in Korea during the extension is covered again in Section 6 of this statement and explained in detail in the attached proposal for extension.

In Nigeria, the model developed under the earlier contract was used in the preparation of the Perspective Plan for Agriculture to 1985. In addition, applications of model components have been made to the livestock subsector in Venezuela and Colombia.

The potential for additional transfer and utilization is large. This extension provides for further development of model components, establishment of an operating software library, and continuation of the training program as important elements in expanded utilization. It is expected that additional utilization at the country level will be developed through collaborative working relationships between LDC and U.S. university personnel utilizing IPA appointments and new financial arrangements.

Information about this approach and the experience of using it in Korea will be disseminated to LDC and USAID personnel through seminars and workshops planned for 1975 and 1976.

5. Management Considerations

As a part of the decision to carry out work in Korea under this contract, another contract (AID/ead-184) with Michigan State University was arranged with the Asia Bureau and USAID/Korea. This related contract required the University to:

a) complete a broad agricultural sector study within seven months;

b) complete an investment priorities analysis within one year; and

c) assist in improving program evaluation, data, and project appraisal capabilities of the government.

Work under the Mission/Bureau contract was completed using the initial models developed under 2975. The projects were viewed as highly complementary and operated to fully capitalize upon the complementarity. The information and analysis done under the short-term project was extremely useful in conceptualizing the further development of the simulation model components.

Since completion of Contract 184, a substantial amount of personnel time and resources of this project have gone into: (1) improving existing model components, (2) making the model more user-oriented, and (3) building new components. In addition, a substantial amount of effort has gone into concentrated training of Korean personnel in the systems approach and the use of simulation techniques. These activities received relatively less priority during the first year because of the time pressures imposed upon the activities under Contract 184. This concentrated training effort is making heavy use of the training program and software library components of Contract 2975 at the University.

During 1974, a new project was signed by the ROK and Michigan State University with funds provided by a USAID loan. This project, called the Korean Agricultural Planning Project, involves technical assistance to the ROK by the University in three major areas: policy analysis, agricultural outlook and statistics, and project evaluation. The scope of work under this project is included as appendix A of the attached proposal for extension

of project 2975. The activities under the planning project are to be coordinated with the work under this project to exploit to the fullest the simulation model components and, in turn, to guide the further development of the model to better serve the needs for policy analysis and evaluations in Korea.

The budget estimates shown in this statement include funds for the total set of activities under this project in Korea, East Lansing, and third countries. The proposed budget involves total funding of $697,753 from AID during the 1/1/75 to 6/30/76 period. The University proposes to allocate an additional $150,449 from other sources and to use $21,687 in AID funds reserved for movement of personnel from Korea following the termination of the Mission contract.

It will be necessary to allocate the total budget between central research funds and Bureau/Mission support. The budget shows a possible split based on the location and personnel and the proposed activities. There is a close relationship between the work applied directly to Korea and the research and development in East Lansing. The joint participation of TAB, Asia Bureau, USAID/Korea and the Korean Government in funding the extension remains to be worked out.

6. Plan of Work

Major activities to be emphasized during the extension are described briefly in this statement. A detailed explanation and justification is contained in the attached proposal for extension.

a. In Korea

Work in Korea will be organized to add and improve components to the existing model and to apply the model components to policy analysis problems. Details on the components, their present state and the plans for work and application during the extension are contained in the attached proposal. The main components are:

1) Input-Output component
2) Price adjustment and demand component
3) Recursive linear programming component
4) Population component
5) Livestock component
6) Grain management component
7) Crop yield component

Within the overall plan of work, emphasis will be given to the use of the model as a basis for preparing the Fourth Five-Year Development Plan for the Agricultural Sector and to the utilization of the Grain Management Component as a policy decision tool by the ROKG.

b. Methodological and Theoretical Work in East Lansing

Work will concentrate on further development of computer simulation models and components based on: (1) experience in using them under field conditions, and (2) advances in relevant theories and quantitative techniques from appropriate disciplines, and (3) incorporation of various specialized quantitative techniques from different relevant disciplines, especially economics and systems science. Specific areas in which methodological work will be concentrated are identified in the proposal for extension.

c. Training

The general objective is to further develop, improve and offer short-term and long-term training activities that will meet the needs of LDC's for manpower in this area of work. A specific objective is to fulfill training needs for the Korea institutions to develop the necessary expertise in the use, adaptation and further development of simulation models. While progress has been made, the National Agricultural Economics Institute and related agencies in Korea are not nearly fully staffed with trained personnel.

d. Software Library

The model components and computational routines developed in Korea and other locations will be generalized, documented and made available to other users with appropriate technical assistance. The library will be located in an appropriate international agency and the University will cooperate and assist in its organization and initial functioning.

7. Estimated Budget

(See page 8).

BUDGET

Line Items	Period 1/1/75 to 6/30/75	Period 7/1/75 to 6/30/76	Total 1/1/75 to 6/30/76
Expenditures			
Salaries	122,331	222,512	344,843
Consultants	1,000	0	1,000
Indirect Costs	60,304	108,202	168,506
Fringe Benefits	18,349	33,375	51,724
Travel/Trans.	27,719	60,031	87,750
Other Direct Costs	14,910	29,020	43,930
Total for Project	244,613	453,140	697,753
Total Other AID Work	---	21,687	21,687
Total Non-AID Work	---	150,449	150,449
Total Expenditures	244,613	625,276	869,889
Sources of Money			
Amendment 8 AID/csd-2975	84,203	---	84,203
New AID Funding TAB	89,830	232,500	322,330
USAID/Bureau &/or ROKG	70,580	220,640	291,220
Total this Ext.	160,410	453,140	613,550
Non-Budgeted AID Sources	---	21,687	21,687
Non-AID Sources Including MSU	---	150,449	150,449
Total for Program	244,613	625,276	869,889

8. Review of Progress and Project Appraisal

AID's continuing emphasis on agricultural sector analysis is concerned with the evaluation of the consequences of alternative policies, programs and projects on production and equity objectives. The MSU contract for adaptation of simulation models for agricultural sector analysis is an important element in our efforts to develop and test alternative methodologies in a context of application in actual sector planning situations. The need for tested quantitative techniques for sector planning is even more urgent as AID places greater emphasis on social development goals and more equitable sharing of the benefits of economic growth.

The present AID/csd-2975 contract on systems simulation evolved from the earlier AID/csd-1557 contract that was designed to develop a sector model for agricultural policy analysis. The objectives of the previous contract were conceptual and methodological rather than operational. It was developed with reference to Nigeria, but was not actually applied to agricultural sector analysis in that country. The current contract was designed to test and adapt the approach in an operational context. Korea was chosen as the site for full field testing of the systems-simulation methodology for policy analysis and programming in the agricultural sector.

The project was reviewed and evaluated during January - March 1974. The evaluation was carried out in anticipation of the proposal for extension which is now being considered. The evaluation was designed to measure the extent to which the project's objectives have been fulfilled in Korea, identify factors that have determined the degree of success of the approach, suggest steps that can be taken to extend and improve the system simulation technique, and identify the necessary conditions for transferring this approach to sector analysis to other LDCs.

The evaluation involved a team of six qualified professionals who prepared related but independent appraisals of the following elements of the overall project:

1) Capacity and utilization of the model in Korea,
2) The systems model,
3) Recursive linear programming component,
4) Grain management program component,
5) Population component,
6) Livestock component.

Copies of the six reports prepared by the evaluation team are attached to this appraisal report. The reports were reviewed and discussed at a two-day seminar held March 27-29, 1974.

The following persons participated in the seminar:

Michigan State University	Evaluation Team
Michael Abkin	Albert Brown
Tom Carroll	Wilfred Candler
Hartwig de Hahn	John Craig
Glenn Johnson	Richard Phillips
Thomas Manetsch	Jorgen Randers
Kim, Dong Min	Inderjit Singh
George Rossmiller	Alan Strout
Kim, Ho Tak	
Iowa State University	**AID**
William Merrill	Joel Bernstein
	Daniel Bromley
Government of Korea	Douglas Caton
	L. B. Fletcher
Kim, Dong Hi	Leon Hesser
	Lane Holdcroft
FAO	Donald McClelland
	Robert Morrow
Apostolos Condos	Richard Suttor

A. Adapting, Testing and Using the Computer Model

The MSU team claims that the initial Korean systems model of the agricultural sector was finished more quickly and at a lower cost than would have been possible without the prior model development for Nigeria. The evaluation provided some justification for this claim, although the general consensus was that the number of model elements adapted from the Nigerian project was small and that the main difficulty in using the transferred components was fitting them to Korean reality.

There was agreement that the model components developed for Korea, including social process structures as well as service routines, can be usefully adapted for other applications if they are well documented. This conclusion is reflected in the plans for softwar library development contained in the proposal for extension.

The initial Korean model was developed concurrently with an in-depth sectoral analysis of the Korean agricultural production and marketing systems. This sector study (KASS) was carried out under a companion Mission-funded contract with MSU (AID/ead-184). This contract required MSU to produce a broad comprehensive agricultural sector analysis and a report on investment priorities by mid-1972. These reports were completed on schedule and were well-received by the Mission, Government of Korea, and experienced professionals who have reviewed them. The sector model provided a quantitative framework and a computerized capacity for data organization and projection that were utilized in the KASS sector study.

Nevertheless, the evaluation did not determine that the computer analysis was essential for the sector study. This conclusion does not, of course, detract from the value of the sector study, and a number of its major recommendations have already been implemented.

The original model was regarded as insufficiently developed to generate surprising new insights into the development alternatives for Korean agriculture. Its main use was to make the extensive computations involved in analyzing exogenously assumed development patterns more efficient. Some conclusions of the model regarding the implications of alternative policies were rejected in the evaluation as depending upon particular formulations and parameter values that could not be validated with the necessary precision.

The evaluation concluded that the approach should be extended in Korea to produce a rich, flexible simulation model capable of generating results that can be directly useful to policy makers. It was agreed that with this additional effort the Korean simulation project will lead to a significant improvement in Korean agricultural planning capability. Priorities for model development and application, as contained in the proposal for extension, reflect the recent changes in the Korean economic environment. World grain prices have increased sharply, chemical fertilizer has become scarce and expensive, and declining industrial growth rates have reduced the ability of the Korean economy to finance food and raw material imports. The focus of the modeling effort and the array of alternative policy instruments to be used in attaining specified goals have been reviewed and adjusted to conform to the problems Korea is now facing. The emphasis in the proposal on the use of the model as a basis for preparing the Fourth Five-Year Plan (1977-1981) for the agricultural sector and on a grain management component for use by the government in domestic grain pricing and import programs is consistent with the intent to apply the multi-sectoral, multi-level approach to priority problems.

Some of the recommendations in the KASS report grew out of qualitative institutional studies including the appraisal of the National Agricultural Cooperative Federation and the paper on the organization of the MAF. One such recommendation was that the MAF concentrate on increasing the capacity of its personnel in key administrative and staff positions in performing functions related to policy analysis, agricultural outlook, and program and project evaluation. Mainly as a result of this recommendation, USAID/Korea and the Ministry developed an AID grant-funded project with the Ministry identified as the Korean Agricultural Planning Project. This project calls for the provision of three long-term technical assistance personnel to be stationed in the Ministry over a three-year project period in the areas of agricultural policy analysis, agricultural outlook, and program and project evaluation. In addition, short-term personnel as needed are to be provided in these three general areas plus the area of agricultural statistical collection and processing. During the course of project development the Ministry of Agriculture and Fisheries, with the concurrence of USAID/Korea, requested that MSU be the contractor for the

provision of the technical assistance called for under the project. In February 1974 a 3-year $700,000 contract was signed by MAF and MSU.

The KAPP activity is a logical step for MSU in Korea to help Korean personnel make more effective use of the KASS approach. In viewing KASS as the analytical backstopping agency for the KAPP personnel in the carrying out of their obligations and activities in the operational agencies of MAF, the opportunity and necessity for KASS interaction with the administrators and operational decision makers in MAF increases. Further, the pressures will be on the KAPP personnel to address relevant and high priority issues and through them this priority and pressure will be transmitted to KASS. Thus, the KASS analytical unit should have better linkage with decision-making processes and also should receive better feedback from the decision-making participants as to how the model components can provide even more useful analysis for policy purposes.

2. Training and Development of Korean Capability

The systems-simulation effort in Korea is carried out by a division of the National Agricultural Economics Institute (NAERI), a part of the Ministry of Agriculture and Forestry (MAF). Developing staff competence has been a continuing goal of the NAERI leadership and the MSU team. It involves finding, training and keeping talented people.

Due to the diversity of disciplines and abilities needed for successful application of the systems analysis approach to agricultural sector analysis, several types of training are needed to produce the requisite manpower resources. MSU has experimented with training involving three distinct subprograms which, in combination, can be used to produce a range of capabilities. The subprograms are: a Basic Study Program primarily for model builders and analysts, an Orientation course for policy-level administrators, and a Computer Programmer Study Program for personnel needed to program and operate model components.

Seven Koreans who worked with MSU personnel during the sector study and early stages of model development are currently studying at MSU. Their programs include M.S. and Ph.D. degrees in agricultural economics and systems science as well as the special one-year training course described above. Other Koreans are completing degree programs at other universities in the U.S. and third countries. A good deal of on-the-job training has been done by the MSU staff, and this informal training continues.

The evaluation identified a considerable need for further formal training, and for steps to attract and retain competent staff members at NAERI once they have been trained. The problem of adequate salaries is paramount in this connection. There is also need to create more prestige through greater recognition of the NAERI program and linkage to other key

Korean educational, research and planning institutions. Efforts to overcome manpower deficiencies and better establish NAERI as a recognized source of analysis for planning and policy are important elements in the project extension.

Further development of the specialized training courses is required. Provision for improved coordination between countries undertaking sector simulation projects and the training of personnel is needed. The means for funding a continuing training program must be found. Particular attention will be given to evaluation and further development of the training program during the proposed extension.

C. The Computer Library for Agricultural Systems Simulation

Under contracts AID/csd-1557 and AID/csd-2975, the Michigan State University (MSU) simulation team has developed and applied the generalized system simulation approach to agricultural development analysis and policy making. As part of that effort, a number of models have been built and computerized. These include, for example, models of production and processing processes; demand and consumption; demographic processes as applied to human, cattle and tree populations; commodity, regional and national accounting; resource allocation decisions; and the diffusion of innovations.

It has become clear that these and other processes are of general interest in the developing world and that generalized models of them could be documented and made available to help analyze similar problems in other countries. The use of a software library of such generalized models can greatly reduce the cost of conducting agricultural sector, subsector, policy, program and project analyses by: (1) facilitating application of the computerized system simulation approach incorporating a broad range of quantitative analytical techniques--e.g., LP models, econometric models, PERT models, state space models, etc.--to problems in LDCs; and (2) greatly reducing the likelihood of one team of workers going through the process of developing models which may be virtually identical to models already developed or being developed by another team in another place. For such a library to be effective, its prime concerns must include complete and clear documentation of each of its models and programming the models in a language which is acceptable to a wide range of computer models and sizes.

With this rationale, the initiation of development of such a software library (CLASS) was written into the first phase of the Project's AID contract, AID/csd-2975, and a Simulation Library Working Conference was held in March 1973 with representatives from national and international development assistance agencies, LDCs and relevant disciplines to get some idea of the potential demand for such a library and of how best to go about organizing it. The conferees concluded, briefly, that:

1) there is clearly a need for developing analytical capacity, particularly in LDCs, for policy and other decision making in development planning;

2) CLASS can contribute to the satisfaction of that need;

3) the library should be open to any analytical techniques which prove themselves useful;

4) a passive clearinghouse would not be sufficient, but rather complementary inputs, particularly expertise, need to be actively provided to successfully implement library components and make sure that they are not improperly used; and

5) such expertise is a major limiting resource and, therefore, training is a high priority, complementary activity.

In the near future, it will be essential that the library be closely associated with one or more organizations charged with model development, research and analysis applications, and training. In the short run, these broader functions are being partially carried out in fulfilling MSU's documentation obligations under its AID contract. However, once the research, development and field application testing have standardized the scope and procedures and as the library expands and acquires applications experience, it will be necessary that it move from MSU to a national or international development assistance agency.

The first meeting of the CLASS Policy Advisory Board was held at MSU on May 6-7, 1974. Major recommendations were that (1) an international conference of potential library users should be held in about May 1975 to introduce the library and services it can provide and (2) library personnel should concentrate over the next year on (a) including in the library a "critical mass" of KASS and Nigerian components to begin providing user services, and as a basis for a library services demonstration at the user conference indicated under point 1 above and (b) further development of the user simulation language for interaction with the library models. In addition, the extension requires that the library be located in an international agency before the end of 1975 and that MSU provide technical assistance for its operation in the initial phase.

D. Project Staffing by MSU

The evaluation team and the AID staff have high regard for the MSU personnel that has served on this project in East Lansing and in Seoul. The only staffing problem that developed was the lack of an experienced economist in Korea after 1972. This staffing deficiency was the primary cause for the criticism of the economic content of the models contained in the evaluation papers. The proposal contains a firm commitment from MSU to assign an experienced economist to lead the effort in Korea. This person is expected to begin his work before the end of 1974.

E. MSU's Continuing Role in Korea

The most important objective of the proposed extension of the contract is to build up Korean competence to develop and apply the agricultural sector simulation models as quickly as possible. To establish credibility with Korean policy-makers, the project will focus on several special purpose sub-models and on the use of the overall model structure for sector planning.

If a largely independent effort to establish the approach is to be made by Koreans, the Korean staff must have primary responsibility for applying the existing model and its components to current policy problems as rapidly as possible. The MSU involvement in the period of the extension should be largely restricted to model development, training, and software development for transfer to other LDCs. Although periodic MSU consultations will undoubtedly be needed after 1975, it is expected that long-term MSU personnel can be completely phased out of Korea during the period of the extension.

Attachments:
Project Proposal from MSU
Six Reports

September 6, 1974

Addendum

The proposal for extension of the contract on Adapting Simulation Models to Agricultural Sector Analysis with Michigan State University was discussed at the meeting of the Research and Institutional Grants Council held August 15, 1974. The discussion at the meeting centered on questions of substance raised in a memo from J. J. Dalton, the ASIA/TECH member of RIGC and on the division of budget support between TAB and ASIA. A committee has been formed to give further consideration to the questions raised in the Dalton memo. This committee will advise the Project Manager and University on a continuing basis in strengthening the work under the contract if the extension is approved. The sharing of funding is being resolved through discussions between the two Bureaus.

Coutu
9310556 (14)
PD-AAF-401
19p

PROJECT PROPOSAL FOR EXTENSION

OF

CONTRACT AID/csd-2975

AGRICULTURAL SYSTEMS SIMULATION PROJECT

July 1973

I. INTRODUCTION

II. SCOPE OF WORK: ADOPTING AND TESTING OF AGRICULTURAL SIMULATION MODEL TO NATIONAL, SECTORAL AND SUB-SECTORAL LEVELS

A. Background

B. General Statement of Work

C. Specific Statement of Work

III. PROGRAMS

A. Introduction

B. Field Applications

C. Research Needs--Economics

D. Research Needs--System Science

E. Research Needs--Other Related Disciplines

F. Software Library

G. Training Program

IV. BUDGET

(1) separate
GTS — adaptation & library
NES, ~~[illegible]~~ —
(2) specify res. hypothesis & methodologies
(3) spell out phased work plan for res

I. INTRODUCTION

The contract for adapting and testing of agricultural simulation models to sector analysis was initiated through Contract AID/csd-2975 in July 1971. Its total firm budget funding the contract through March 1974 is $685,000. This contract has enabled Korean, Nigerian, Colombian and American academic and government personnel to jointly develop, test and adapt simulation models to sector analysis by using the results of the Korean Agricultural Sector Study, Contract AID/ead-184.

Over the past two years of the contract, the major efforts have been directed to the development, testing, modifying and finally attaining a working simulation model. Because of the nature of the inputs and the anticipated usage, the contract calls for further development of such models and the establishment of a software library and a training program as vital support elements for operationalizing such models.

The training program and the software library are now in the initial stages of development and the models are both being used and further refined for generalized use.

The following background, scope of work for the entire program including the software library and training program spell out in some detail the research and implementation to be carried out in the next three years. It calls for a three year extension of Contract AID/csd-2975 with additional funding of $1,840,000 to be utilized over the three year period.

II. SCOPE OF WORK

A. Background

The general, computerized, systems-science, simulation approach: (1) has demonstrated its capacity to enhance the state of the art in sector planning, and (2) is an important component of a program that meets the high priority assigned to sector planning. The need, now, is to move in depth in the evaluation of alternatives at national, program and project as well as on policy alternatives at sectoral levels. A critical need is to expand both micro- and macro-type analyses and to bridge the two with appropriate aggregation models. This expansion should deal more specifically with the incorporation of specialized techniques such as recursive linear programming, input/out analyses, etc. in the general approach. We also need to stress the international, intersectoral, interprogram and interproject transferability of the components of such models.

The generalized, computerized, systems-science, simulation approach project relates directly to the key problem areas of economies, sectors and subsectors with emphasis on agriculture. The models constructed under AID/csd-1557 and the first phase of this contract are constructed on "the building block" principle. Thus, they have components for annual cash crops, annual food crops, perennial export tree crops, and livestock. Further, they deal with agricultural research, extension and education, transportation, interregional domestic trade, export earnings, population,

domestic consumption, taxation, foreign trade and provides for transactions between the farm and, in a rudimentary way, the nonfarm sector. In turn, each of these components is constructed of subcomponents. In the future these subcomponents should be more oriented to micro problems as well as to completion of more macro models.

B. General Statement of Work

A basic objective of this project is to test, apply, and further develop, under practical field as well as academic conditions, the simulation approach and models (including components) developed under Contract AID/csd-1557 and the first phase of this contract. This will increase the usefulness of developmental studies and analyses while lowering the cost of policy, program and project development and evaluation. In order to accomplish these objectives both foreign and domestic institution building, an expanded training program, and an international software library are required.

C. Specific Statement of Work

1. Test, adapt, extend and use the computer simulation models developed under AID/csd-1557 and the first phase of this contract in the context of up to four (depending on size of effort) more developing countries to design, develop, and evaluate selected policies, programs and/or projects at micro and/or macro levels. This will be done with host country, third country and international agencies as opportunities and needs arise and as mutually agreed to by TAB/AID/W and the Contractor. This will also be done for USAID Missions in countries mutually selected by AID/W and the Contractor. In accomplishing this objective, emphasis

will be placed on establishing linkages with indigenous institutions as well as on establishing capacity to use computerized simulation models to design, analyze, and evaluate their own policies, programs and projects. There are numerous country locations where more single components of the simulation model could be applied such as the tree crop component (Colombia, Brazil, Philippines) and annual crop component on rice or wheat (Philippines, Pakistan, Korea).

2. Extend and further establish a software library. The various mathematical models and computational routines which are referred to herein as "software" shall continue to be placed in one or more of the standard computer languages, indexed and made available to "borrowers" with appropriate explanations. This will depend on work under (1) above and (3) below on further generalization of existing components, the development of additional new components, and the extension of a higher-order simulation language started in the first phase of this contract for use in the integration and combination of components into configurations required in various institutional and geographic contexts. Such a language will be needed increasingly to make the model components available on a national and international basis to potential users in donor, lendor and host country agencies including, especially, personnel and agencies worked with under the first phase of this contract.

3. Further develop computer simulation models and components on the basis of experience in using them under field conditions on the basis of advances in relevant theories and quantitative techniques in various disciplines. A number of extensions and modifications to the models

will be needed. These include the further incorporation of specialized techniques, the incorporation of still further developments in the theory of investment and disinvestment as related to supply and demand responses and the handling of aggregation problems.

4. Development of a program to train personnel from host country, donor, and lendor agencies and U. S. universities in the use, adaptation and further development of computer simulation models at MSU, in host countries and, possibly, in international agencies. Training programs will be conducted at MSU and in conjunction with host country and international institutions. These training activities will continue to be important in establishing the international and national linkages and capacities to use computer simulations in designing, analyzing and evaluating developmental policies, programs, and projects. These special training programs will develop capability to respond to training requests from the U. S. government (including its overseas agencies), international agencies, foreign governments, and grantor and lendor agencies.

5. Be responsive to requests from workers in such related sectors as health, education, industry, transport, population, technological research, nutrition, and public administration for consulting services and, perhaps, specially funded joint participation in constructing models in such fields.

III. PROGRAMS

A. Introduction

Research on and to use the general, computerized, systems-science, simulation approach is the fundamental objective of this contract. As

indicated in the specific objectives, the need is to improve the general, systems-science, simulation models. This need is with respect to improvements which can be generated not only by both economists and systems scientists but by members of other disciplines as well. In order to attain the needed results both applied field and disciplinary research are needed. The field research in applying existing models and model components is needed in order to reveal difficulties and deficiencies with existing models and components. And, of course, office research is needed in order to develop further the models and components. The components need to be improved with respect to economic, systems science and other subject matter content. Additional existing economic theory needs to be incorporated into the components. Still further, additional economic theory needs to be developed for incorporation into the components. The same is true with respect to existing and needed systems science theory as well as the theories of other disciplines having to do with institutional, technical and human change. Of particular importance are the decision making theories which are part of both economics and systems science and which are also under development in such related disciplines as statistics, political science, sociology and philosophy. A needed contribution from systems scientists has to do with the incorporation of specific techniques from such disciplines as economics, econometrics, statistics, cybernetics, socio-metrics, etc. and to the general, systems-science, simulation models of the type we are concerned with in this project.

Specific hypotheses

Elsewhere in this proposal, it is noted that progress of the type noted above is necessary in order to increase the effectiveness of both the training program and the software library efforts contained in this proposal. This is true; however, the project envisions that both the training program and the software library will serve the ends of developing and increasing the use of the approach rather than having improvements in the approach serve the training and library efforts.

Many improvements can be made in the current state of the art vis-a-vis the development and application of decision making models for LDC's and these require advances in economic theory, system theory, computer science, etc.

B. Field Applications

(to be filled in)

C. Research Needs--Economics

(to be developed later)

D. Research Needs--System Science

In system science there are at least three areas where further research can, potentially at least, lead to more effective simulation models. The first of these is in the area of parameter estimation and model identification. Modern developments here (Kalman filtering and other dynamic methods) can improve estimates of the parameters which go into models and hence improve the ability of models to represent the past and present behavior of the real world. These techniques provide additional means of validating models and can lead to more reliable conclusions regarding the consequences of alternative decisions.

A second area in which system science research is likely to pay dividends in terms of more effective decision making in LDC's is in the area of decision optimization, i.e., finding the set of decisions that optimizes a criterion of interest to decision makers when an appropriate criterion exists. A wealth of recent work in the area of optimal control theory and dynamic nonlinear programming is potentially applicable to the problem of decision making over time to optimize a criterion of interest to decision makers. Relatively little of this has been applied to the large, nonlinear dynamic models usually encountered in developmental planning.

A third area, related to the second, is in the area of cybernetic control of complex dynamic systems with many decision variables and many variables (performance measures) to be simultaneously kept within desired limits. Again, relatively little work has been done to apply this work to management problems (grain management, price stabilization, etc.) in LDC's.

A minimum initial research program should mount efforts in each of these three areas. Attention should focus on specific needs in LDC's and the currently available body of theory which can be adopted as soon as possible to provide useful solutions. Personnel required to implement such a program are estimated as follows (annual basis):

System Scientists	18 man-months/year
Graduate Students ..... (Ph.D. candidates)	48 man-months/year
Computer Programmer	12 man-months/year

E. Research Needs--Other Related Disciplines

1. Statistics
2. Political Science
3. Philosophic Value Theory
4. Sociology
5. Biology
6. Chemistry
7. Cybernetics

What is this? Only extend to all possibilities?

F. Software Library

Under contracts AID/csd-1557 and AID/csd-2975, in Nigeria and in Korea, the MSU simulation team has developed and applied the generalized system simulation approach to agricultural development analysis and policy making. As part of that effort, a number of models were built, assembled and computerized. These include, for example, models of production and processing processes; demand and consumption; demographic processes as applied to human, cattle and tree populations; commodity, regional and national accounting; resource allocation decisions; and the diffusion of innovations.

It has become clear that these and other processes are of general interest in the developing (and developed) world and that generalized models of them could be built and then adapted and assembled in various configurations to help analyze particular problems in particular countries. Therefore, the initiation of development of a software library of such generalized models was written into the first phase of this contract.

Under that charge, a "Draft Proposal for an Agricultural Sector Simulation Library" was written in October 1972 and distributed for comments. With the Draft Proposal as a basis for discussion, a Simulation Library Working Conference was held in March 1973 with representatives from national and international assistance agencies to get some idea of the potential demand for such a library and of how best to go about organizing it. Associated with the development of the library is the development and operationalization of a general simulation language to serve as a structure and executive for assembling, testing and operating library components.

With this background, the library and its scope were defined as follows:

The software library is viewed as a unit which acquires, catalogs, maintains and distributes computer programs and associated documentation. These computer programs are for generalized simulation model components and routines designed specifically for the analysis of agricultural development problems and processes. In particular, the library sets standards of admissibility for programs and documentation; catalogs and indexes programs and then documents them so as to facilitate their retrieval by users seeking a set of programs to be used in a specific problem analysis; and distributes programs and documentation to users.

To enhance the effectiveness of the library, its functions also include identification and solicitation of needed models; actively bringing programs and documentation up to the library's standards; and the provisions of limited consultation in identifying and applying appropriate library programs. A subsidiary function of the library in conjunction with the identification and solicitation of models is to survey and catalog ongoing research in agricultural systems modeling and simulation.

It is essential that the library remain closely associated with, if not a part of, one or more organizations charged with model development, research and analysis applications, and training. In the short run these broader functions will be carried out in fulfilling MSU's obligations under its AID contract, AID/csd-2975 extended, as proposed herein. In the long run, however as the library expands and acquires applications experience, it will be desirable, even necessary that it move from MSU to, or to some association with, one or more national or international development assistance agencies.

The work plan to March 31, 1974 included:

1) Identify components of the current versions of the Nigerian and Korean models which are likely candidates for the library.

2) Set general standards of admissibility of library models and routines, including such criteria as general applicability, compatibility with other programs, and theoretical and empirical validity.

3) Determine levels and formats of the documentations to be maintained, where levels include indexes, abstracts, verbal and mathematical descriptions and detailed programming manuals.

4) Set minimal programming standards to facilitate linking components for specific applications on a wide range of computing facilities.

5) Establish technical procedures for indexing, cataloging, storing, manipulating, retrieving and distributing library programs and associated documentation.

6) Rework, document and program the components identified in (1) in light of the standards set in (2), (3), and (4).

7) In parallel with (1) - (6), work will proceed on the development of a general simulation language.

8) Develop and implement procedures for publicizing and otherwise disseminating information on the library's available inventory and services.

9) Begin a preliminary survey and annotated bibliography of current agricultural simulation research to identify models and routines in support of our ongoing research and which may be appropriate candidates for inclusion in the library.

10) Provide technical consulting on applying library programs as requested, subject to available resources and the requirements of our contract.

11) Define the functions of an Advisory Board and select, in coordination with AID/W, its members.

Obviously, the above work plan represents only a beginning, much of the emphasis necessarily being on start-up activities. In the proposed three year extension, the emphasis will shift to maintenance, growth and application, with ongoing evaluation of operations. In addition, plans will be made and implemented, depending on experience with the library in operation, for transferring the library to a national or international development assistance agency.

The proposed work plan follows. Of course, the level of activity, particularly in item (5) below, will depend somewhat on the demand for library services.

The work plan for April 1, 1974 to March 31, 1977 includes:

1) In consultation with AID/Washington and the Advisory Board and based on the library's experience in actual applications, consider, plan, and move towards a long run institutionalization and funding of the library elsewhere than MSU, ideally in a national or international development assistance agency. By

the end of the proposed contract period, i.e., March 1977, the transfer of the library away from MSU should be underway.

2) Complete the development and operationalization of the general simulation language.

3) Continue, although more comprehensively, surveying and maintaining an annotated bibliography of ongoing agricultural simulation research in support of our own work and for dissemination to other workers in the field; and begin to acquire appropriate library components as they may be identified in the survey.

4) Continue to develop models and routines for the library in connection with MSU's agricultural systems analysis and research work.

5) Supply library programs, documentation and technical consulting in support of the same analysis and research work as in (4) and as requested, subject to available resources and the requirements of our contract.

6) Cooperate with the ongoing training program at MSU by supplying library programs, documentation and expertise as needed.

7) Define explicitly the scope of the library's inventory (i.e., the kinds of models and the kinds of problems and processes modeled), and establish an appropriate classification and indexing scheme for the library.

8) Based on ongoing experience with the operation and application of the library, continually re-evaluate and modify as necessary the library's organization; the scope of its inventory, services and activities; the simulation language; and the documentation and programming standards.

G. Training Program

It is our belief that a point has been reached in the development and application of the general, computerized, systems-science simulation approach where a main limiting resource in its productive use in developing countries is skilled professional manpower. This is not to say that further methodological developments and experience with use of the approach are not necessary--they certainly are and are provided for in other sections of this project proposal. It is to say that substantial benefits are likely to be derived from more well-trained professionals in developing

and applying this approach to a wide range of development issues.

A pilot training program for producing manpower needed in the application and development of this approach to problems of project, program and policy analysis in both the LDC's and DC's will commence in September of 1973. In subsequent years of the training program (1974-1977) the major objectives will be:

1) To further develop and refine the program and build it up to an appropriate operating level.

2) To offer a set of short and long run training components that will serve the most important needs of LDC's for manpower in this specific area of concern. These will include:

   a) A basic training program of one year minimum duration for producing professionals who can develop and apply decision making models at project, program and policy levels. (In many cases this basic training program would be part of a masters or doctoral program in System Science, Agricultural Economics, etc.).

   b) Short courses of 2-4 week duration for administrators, agricultural economists, agricultural specialists, etc. who need a basic introduction to the systems approach and its application to practical development problems.

   c) Short courses of 3 month duration minimum for computer programmers who will have responsibility for operationalizing decision making models in LDC's.

Related to objective one, further development will improve and expand course content, seek improved means of instruction (including further development of teaching aids and materials), improve trainee selection procedures, etc. Also, important questions of allocation of training resources to the three kinds of training outlined above must be resolved. (The mix of people produced will have considerable impact upon the effectiveness of applications in particular countries if, as anticipated, trainee selection procedures seek to provide individual countries with a balanced mix of talents required.)

During the period September 1974 - September 1975 the training program will move from the pilot program of September 1973 - September 1974 to a fully operational program meeting the objectives outlined above. In order to do this activities will be carried out as follows during September 1973 - September 1974:

1) Continuing consultations with external agencies (AID, IBRD, FAO, etc.) for trainee selection, program operation, etc.

2) Further develop and refine the course SYS 8xx for the Basic Training Program (estimated 2 man-months system scientist, 2 man-months computer programmer).

3) Further develop and refine the course AEC 8xx for the Basic Training Program (estimated 2 man-months agricultural economist and 2 man-months computer programmer).

4) Improve trainee selection procedures (estimated one man-month behavioral scientist and system scientist).

5) Develop 2-4 week short course for administrators, etc. (estimated 1 man-month agricultural economist, 1 man-month system scientist, 1 man-month computer programmer).

6) Develop 3 month minimum duration short course for computer programmers (estimated 2 man-months computer scientist, 1 man-month system scientist, 2 man-months computer programmer).

7) Offer Basic Training Program for 20[1/] trainees. Estimated manpower requirements:

System Scientist	12 man-months
Agricultural Economist	12 man-months
Administrative Assistant	2 man-months
Graduate Assistants	18 man-months
Computer Programmer	9 man-months
Secretary	2 man-months

8) Offer two 2-4 week short courses for administrators (20 trainees each).[1/] Estimated manpower requirements:

[1/] These enrollment estimates are based upon the mixes of expertise that have been found productive in MSU efforts to build and implement models in Nigeria and Korea.

Agricultural Economics	1 man-month
System Scientist	1 man-month
Computer Programmer	1 man-month
Administrative Assistant	1/2 man-month

9) Offer one 3 month short course for computer programmers (20 trainees).[1/] Estimated manpower requirements:

Computer Scientist	2 man-months
System Scientist	1/2 man-month
Agricultural Economist	1/2 man-month
Computer Programmer	3 man-months
Graduate Assistant	3 man-months

10) Overall training program coordination (estimated 3 man-months system scientist and agricultural economist).

Training program activities from September 1975 through March 1977 will be similar to those outlined above for September 1974 - September 1975 with much less emphasis on developmental aspects. Primary focus will be upon producing trained manpower through the Basic Training Program (item 7 above), the short courses for administrators, etc. (item 8 above), and the short course for computer programmers (item 9 above). At this point in time the appropriate allocation of training resources to the different types of training is an open question. The further experience gained in the next two years will provide more information upon which to base this decision and will, at the same time, provide a basis for further improvements in the training program.

[1/] These enrollment estimates are based upon the mixes of expertise that have been found productive in MSU efforts to build and implement models in Nigeria and Korea.

IV. BUDGET

Three Year Projection for Contract AID/csd-2975

From April 1, 1974 to March 31, 1977

Periods

Line Item	First Year From 4/1/74 To 3/31/75	Second Year From 4/1/75 To 3/31/76	Third Year From 4/1/76 To 3/31/77
Salaries	$292,555	$285,435	$302,560
Consultants	2,000	2,000	4,000
Fringes	43,853	42,815	45,384
Overhead	141,920	137,647	145,904
Travel	52,128	16,650	52,128
Equipment	2,500	2,500	2,000
Other Direct Costs	23,100	21,600	23,100
Allowances	52,286	49,938	49,938
Conferences	--	20,000	10,000
Subcontract	6,000	10,000	5,000
TOTALS	$616,342	$588,585	$640,014

	First Year	Second Year	Third Year
Man-Months Projected			
Professional*	145	124	124
Programmers	60	48	48
Graduate Assistants	48	48	48
Secretaries	24	24	24
Administrative Asst.	4	4	4
TOTAL MAN-MONTHS PROJECTED	281	248	248

*Includes the University appointments of Professor, Associate Professor, Assistant Professor and Specialist.

These projected budgets reflect the normal salaries, incentives and allowances for all personnel being supported under this proposal in accordance with standard government regulations. It assumes the continuation of all incentives related to an overseas assignment including the past support afforded us under Contract AID/csd-2975 whether extended by the U. S. or host government and whether or not covered in the contract. Specifically included herein are access to U. S. commissary, P.X. facilities which cost of living allowances assume, host country tax exemptions, U. S. tax privileges, etc. However, if events occur that necessitate a departure from the continuation of these incentives and/or support services, e.g., transportation, housing that meets AID/State Department standards, etc., the budget would have to be adjusted accordingly. These adjustments would have to be made in the form of additional project personnel, increase in incentive pay and additional monies for transportation, housing, furnishing, repairs to housing, etc.

The number of man-months stated above are minimal, if we are called upon to expand the efforts, then the number of man-months and budget will then have to be reviewed and adjusted.

FILE COPY
9310536 (5)
PD-ABF-401
81p

PROJECT PROPOSAL FOR EXTENSION

OF

CONTRACT AID/csd-2975

AGRICULTURAL SECTOR ANALYSIS

AND SIMULATION PROJECT

July 1974

		Page
I.	INTRODUCTION	1
II.	BACKGROUND	6
III.	OBJECTIVE	13
IV.	STATEMENT AND PLAN OF WORK	14
	In Korea	16
	Further Methodological and Theoretical Development Mainly In East Lansing	25
	Further Development and Evaluation of the Training Programs	31
	Further Development and Testing of a Software Library	38
V.	STAFFING PLAN	48
VI.	BUDGET	55
VII.	SUMMARY	58

PROJECT PROPOSAL FOR EXTENSION

OF

CONTRACT AID/csd-2975

AGRICULTURAL SECTOR ANALYSIS

AND SIMULATION PROJECT

July 1974

		Page
I.	INTRODUCTION	1
II.	BACKGROUND	6
III.	OBJECTIVE	13
IV.	STATEMENT AND PLAN OF WORK	14
	In Korea	16
	Further Methodological and Theoretical Development Mainly In East Lansing	25
	Further Development and Evaluation of the Training Programs	31
	Further Development and Testing of a Software Library	38

I. INTRODUCTION

Work in further adapting and testing agricultural simulation models to sector analysis was initiated through Contract AID/csd-2975 in July 1971. It followed Contract AID/csd-1557 under which MSU was responsible for developing the general systems simulation approach to sector analysis. Contract AID/csd-2975 along with the Korean Agricultural Sector Analysis Contract (AID/ead-184) has enabled Korean, Nigerian, Colombian and American academic and government personnel to jointly develop, test and adapt simulation models to sector analysis. The following is a review of activities completed, a projection of activities necessary to continue the fruitful work going forward under the project and additional funding for continuation of activities in accordance with those begun under Contract AID/csd-2975.

Since Contract AID/csd-1557 was written in 1967, there have been repeated changes in AID/W personnel and in the staffs of its Advisory Committee. Therefore, the introductory and background material presented herein is somewhat more complete than for the usual contract extension.

One of the first things to be done is to place the remainder of this document in perspective with several definitions and distinctions among concepts.

First is the distinction between "systems approach" and "simulation techniques." The concept of the systems approach adhered to by the project is described by T. J. Manetsch and G. L. Park in their forthcoming book Systems Analysis and Simulation with Applications to Social and Economic Systems.

In that book, they define the "systems approach" as a problem solving methodology which begins with a tentatively identified set of needs and has as its result an operating system for efficiently attaining a set of "goods" and avoiding a set of "bads" within the constraints of a system.

> "There are two prominent attributes of this approach: 1) it overtly seeks to include all factors which are important in arriving at a ... solution to the given problem and 2) it makes use of quantitative models to assist in making rational decisions at many levels where it is appropriate to use such tools.
>
> To elaborate, we consider the following mathematical statement:
>
> 'Systems Approach' > $\sum_{i=1}^{N} x_i$
> (read 'includes but is greater than')
>
> x_1 = A methodology for planning/management
> x_2 = A multidisciplinary team
> x_3 = Organization
> x_4 = Mathematical modeling techniques
> x_5 = Disciplined non-quantitative thinking
> x_6 = Simulation techniques
> x_7 = Optimization techniques
> x_8 = Application of computers
>
> We see from this statement that we have a number of factors that make up systems analysis but do not completely define it. One of these important factors is a systems planning and management methodology. This is a process that begins with the definition of the needs in the particular situation, moves on to explicit problem definition, synthesis of alternative solution approaches, examination of the feasibility of these alternatives, approach selection, design and optimization of the selected approach, and ends with an operating system which has been implemented in the real world ....

In order to implement the systems approach we usually need a multidisciplinary team which can bring together the many disciplines and talents needed to carry out these diverse functions. We also need organization theory, and organizations to effectively allocate these human and physical resources to the tasks at hand in all phases of activity from planning through operation of the real system.

The fourth factor in the equality above is the concept of modeling. Much time is devoted to modeling in many systems and technical courses. Our concept of modeling is the construction of an abstract model as representation of 'the real thing'. 'The real thing' here is the real situation or problem that is being studied, and the model is a useful representation of that situation that can be dealt with intellectually and reasonably in terms of mathematics or computer programming .... While mathematical models are gaining in importance as means of studying systems and making decisions that relate to the 'real thing', they can never replace sound non-quantitative thinking using the 'mental models' that come with experience in dealing with reality.

The sixth factor in our discussion of the systems approach is the concept of simulation. Simulation usually means that we have a computer program of other functioning model of the system on which we can try different design and management strategies ....

Optimization is where we desire to maximize or minimize some criterion of performance of the system while satisfying other constraints due to physical or social environments. Readers who have been exposed to (economics, our insert) linear or nonlinear programming or to optimal control problems have encountered the concept of optimization before. An example of an optimization problem might involve the assignment of transportation links in a system that transfers goods between several factories, several warehouses, and the ultimate consumers. The goal might be to provide the transportation of goods at minimum cost while satisfying constraints on delivery time and other factors.

The eighth significant area in systems analysis is the use of computers. Systems analysis can be done without computers but the computational power of the computer makes many systems analysis tools easier to use, especially in large scale problems where the number of variables and interactions are large. Using modern computers it is in our feasible computationally to study complex systems with thousands of variables.

Second, simulation techniques are often used in applying the systems approach to problems. Simply stated, simulation is the tracking or projection of a variable or set of variables over time, under different assumed conditions some of which are and some of which are not controlled by man. An eyeballed line through a scatter diagram on graph paper, using a ruler and pendil, is a simulation if the line projects the horizontal time dimension beyond the known data. A regression equation with time as an independent variable can provide a bit more sophisticated simulation. Time oriented models based on one or more specialized techniques such as input-output, linear programming, simultaneous equations[1/] are more complex but not basically different. They provide the analyst with a technique for estimating the consequences through time of alternative assumptions--i.e., simulations--often in a specialized sense, through optimizing a single objective function and using specialized sources of data. Specific simulation techniques are used to formulate models which display the time path consequences of a specific set of system inputs and estimated values of parameters.

This project uses the generalized, computerized, systems, simulation approach. Theory and techniques from many disciplines are used to build models in a systems context, the domain of the system modeled being defined in such a way as to include the problem being addressed. Specialized theories and techniques are used where appropriate to build components of the overall model. Such specialized components are linked to each other in the model as are the real components which they represent in the real system. Thus, the approach is general with respect to disciplines and their different theories and to

---

[1/] Cowles Commission variety with parameters probabilistically estimated, usually from time series data.

techniques. It is also general with respect to sources and types of data, and information. And finally it makes use of the technology of the modern electronic computer as do many of the specialized techniques when used separately. Thus, the approach used in this project is not in any way competitive (or in conflict) with any specialized technique, theory, or discipline. Ideally it encompasses any and all of these techniques and uses them as, when, and where appropriate in modeling a system relevant to the study of a particular specific problem or constellation of problems. As such it seeks to exploit and develop the complementarities among various techniques by incorporating components based on these techniques into general, systems-science simulation models. There is much research and development work still to be done to constructively use and interface such components. This project can contribute to and benefit from theoretical, methodological, and operational problem solving research efforts in other projects which are using, gaining experience with, and further developing various specialized techniques. The need is for cooperation to exploit the complementarity between the more specialized techniques and the more general approach. Exploitation of these complementarities among various techniques can provide beneficial advances to all concerned. AID, as the funding source for this and other projects, should encourage and be receptive to the building of linkages and mechanisms for exploiting the complementarities among these projects. The MSU team stands ready to cooperate with other projects as mutually satisfactory mechanisms can be devised.

Third, and finally, the approach is useful in many non-sector level applications. This project focuses on modeling the agricultural sector to assist decision makers at the planning, policy, program, and

project levels, and at the national and regional, sector and subsector levels. Thus it is not confined to sector analysis. Though the systems approach is useful in analysis of a myriad of problems outside of agriculture as well as within, this project clearly cannot and should not attempt to apply the approach outside of agriculture in which it is applicable.

II. BACKGROUND

The generalized, computerized, systems-science, simulation approach of this project relates directly to the key problem areas of economies, sectors and subsectors with emphasis on agriculture. The models constructed under AID/csd-1557 and the first phase of this contract were constructed on "the building block" principle. The object was to use specialized techniques where appropriate. Examples in the Korean modeling effort are the recursive linear program for modeling farmer behavior in resource allocation at the firm level, the simple input-output component linking the agricultural and the nonagricultural sectors and the simultaneous equations and regression equations used as integral parts of the grain management program component. They have components for annual cash crops, annual food crops, perennial export tree crops, and livestock. Further, they deal with agricultural research, extension and education, transportation, interregional domestic trade, export earnings, population, domestic consumption, taxation, foreign trade, and in a rudimentary way, transactions between the farm and the nonfarm sector. In turn, each of these components is constructed of subcomponents. In the future these subcomponents should be more oriented to micro problems as well as to integration as part of more macro models.

The general, systems simulation approach: (1) has demonstrated its capacity to enhance the state of the art in sector planning in Korea, Nigeria, Colombia, and Venezuela, and (2) should be an important component of an AID program that assigns high priority to policy and program analysis, sector planning and project design and evaluation. However the Nigerian and Korean successes are best viewed as rudimentary beginnings; the need, now, is to move in depth to further develop and apply and more fully exploit the approach for studying alternatives at national, program and project levels, as well as at sectoral and subsectoral levels.

Practical applications are worth doing both for their own sake and because they reveal problems with the theory, data, and techniques which must be remedied to increase the basic ability to solve practical problems. These problems require research and development efforts of the type supported by the Technical Assistance Bureau of AID/W. Critical basic needs apparent from practical work so far are to expand both micro- and macro-type analyses and to bridge the two with appropriate aggregation models and theories. This expansion must deal more specifically with the incorporation into the general approach of specialized techniques such as recursive linear programming, input/output analyses, etc. It must also handle the international, intersectoral, interprogram and interproject usability and transferability of the components of such models. The social capital being created should be documented and stored in forms readily retrievable by other subsequent users so that AID's investment in this capital will have its full payoff. This requires a software library. Also required is the building of a capacity through training efforts among researchers and decision makers in countries and areas of application, to further develop and use the methodology. Still further the efforts must concentrate on revealing data deficiencies and provide

the basis for priorities in the collection of more adequate, accurate and relevant data. Finally, continued basic disciplinary work is necessary on theoretical issues and data shortcomings in the various contributing disciplines.

The further development and application of the general, systems simulation approach for analysis in planning, policy formulation, program development, and project execution is the fundamental objective of this project. As suggested by the specific objectives, the basic need is to improve the simulation models with respect to their theoretical bases and their potential for efficient and effective application. Contributions toward meeting this need are also required from disciplines other than economics and systems science. In order to attain the objective, both applied field and university based disciplinary research are required. The field research in applying existing models and model components is needed in order to reveal their deficiencies in operational applications in a variety of country settings and environments. It is also needed to better understand the prerequisites necessary for institutionalizing an analytical capacity using the approach into the decision making framework at various governmental levels. And, of course, stateside university based research is needed to develop further the approach, models, and components. Field experiences are needed to make theoretical advances possible. In particular the components need to be improved with respect to economics, systems science, and other disciplinary content. More of the existing body of economic theory as well as theory from other disciplines needs to be incorporated into the components and additional theory (economic and other) must be developed for incorporation into and guidance in conceptualizing components. The same is true with respect to existing and needed systems science theory as well as the theories of other disciplines having to do with institutional, technical and

human change. Of particular importance are the decision making theories which are under development in such related disciplines as economics, systems science, statistics, political science, sociology and philosophy. An essential characteristic of the systems simulation approach is stress on using specific quantitative techniques and theories from applicable disciplines including the social, biological, physical and natural sciences as well as in statistics, cybernetics, mathematics, etc. in the general, systems simulation models of concern in this project.

Over the past three years of the contract, the major efforts in Korea have been directed to developing, testing, modifying and finally attaining a working simulation model. This Korean model and the earlier Nigerian model provide bases for further model development and refinement and are being successfully used as analytical tools in the planning and policy decision making process. This is particularly true in Korea where the government is directed toward agricultural sector development. Specific examples of usage include assessment of benefits from an expanded agricultural research program and projections of the Korean Ministry of Agriculture and Fisheries input into the Fourth Five-Year Economic Development Plan. AID is providing a loan for the agricultural research program and the model is being used for further development of the Fourth Five-Year Plan. The Nigerian model, developed under Contract AID/csd-1557, has been used by university and government personnel under Contract AID/afr-786 and later under Contract AID/csd-2975, to provide part of the input in development of the "Perspective Plan for Agriculture to 1985." In addition, model component applications have been made to specific agricultural sector problems in Venezuela and Colombia. The work in Colombia is in the form of a Ph.D. dissertation on the

beef industry in the northern region. This work was published under the project. The work in Venezuela on the cattle industry is not part of Contract AID/csd-2975 but is a spin off from the Nigerian simulation work, financed directly by the Venezuelan government. Other utilization of project results has followed consultations, seminars, conference participation, and training with IBRD, FAO, and ADB, as well as in Japan, Egypt, Tanzania, and at the University of Missouri. Because of the nature of the inputs, the potential for component transfer to and use of the approach in other countries on other problems is great. This extension provides for further development of such models, and the establishment of a software library and a training program as vital support elements to guarantee utilization. The training program and the software library are now in the initial operational stages of development and the models are being used, further developed, refined and documented for generalized use.

The successes in methodological and theoretical development, in operationalization and application of the approach in host country planning and policy formulation processes, and the broad base of experience gained to date by American and host country personnel provide the foundation for this extension. The following objectives and scope of work spell out in detail the necessary further research and development, and institutionalization to be carried on based upon the solid foundation now established in order to attain full utilization. The document specifies four major areas of coordinated and mutually supportive work--(1) further application and operationalization of models to agricultural sector development problems in Korea and in other locations in response to AID and host country needs consistent with MSU personnel resources and support from the training program and software library support, (2) further methodological

and theoretical development, particularly in economics and systems science at both field and campus locations, (3) further development and operation of a training program in support of institutionalizing the approach in both host country decision-making structures and in donor and grantor agencies, and (4) further development and operational testing of a software library for easier and more efficient transfer and application of components and the approach to a variety of development problems in chosen locations around the world. Figure 1 shows the interrelationships among the various lines of activity within the project and how they will contribute to further, improved, problem-solving applications.

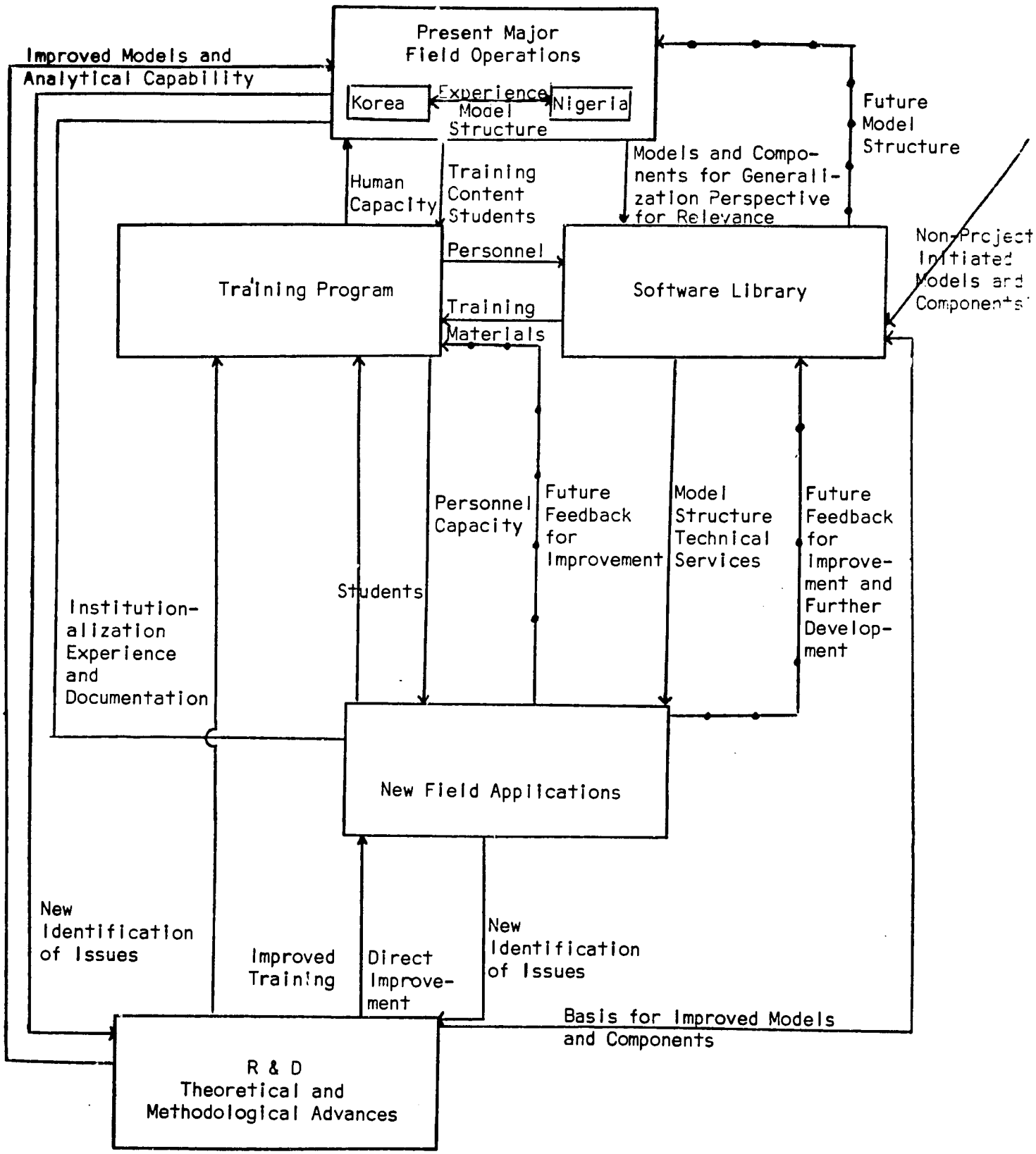

Figure 1. Linkages of Project Components

III. OBJECTIVE

The basic objective of this project is to increase the usefulness of problem-solving developmental studies and analyses while lowering the cost of policy, program, and project development and evaluation through further development, testing, and application, under practical field conditions, of the general, systems-science, simulation approach and models (including components) developed under Contract AID/csd-1557 and the first phase of Contract AID/csd-2975. In order to accomplish this objective the full establishment of an expanded training program and at least one international software library are required as integral objectives of the total project. In the opinion of project personnel, current AID funding limitation has restricted this proposal to less than optimal effort with respect to the software library and training program.

IV. STATEMENT AND PLAN OF WORK

The major field application effort over the past three years has been in Korea. In conjunction with the National Agricultural Economics Research Institute, (NAERI), Ministry of Agriculture and Fisheries, ROK, a basic model consisting of five components has been developed, is operating, is being improved by both MSU and Korean personnel, and is being used by the Korean government in the agricultural sector development planning and policy decision making process. Work continues on development of additional components and refinement of existing components. With a sector model operating as a base and providing broad perspective, attention is now being focused on additional components to tie into and complement the existing sector model as specific needs are assessed through interaction between the Korean Agricultural Sector Study team, Korean government decision makers, and USAID/K personnel.

During January, February and March 1974 an extensive evaluation of the Korea activity portion of this project was undertaken by the Economic and Sector Analysis Division of TAB, AID. A 6-man evaluation group critically reviewed project progress and direction both in Korea and on campus focusing on: (1) institutionalization and (2) the KASS model with concentration on its demographic, the recursive linear program farm resource allocation, the grain management program and livestock components. The evaluation culminated in a 2-day conference at Airlie House and included the MSU team, the evaluators, AID representatives and an FAO representative. The evaluation emphasis was on economics and

demography with little attention to contributions needed from other disciplines. Although no overall formal summary and conclusion statement had been prepared as yet by AID when this was written, individual review papers were available as well as tapes of the evaluation conference. An apparent major conclusion from the conference was that the work should continue with additional emphasis on further development and refinement of components and on institutionalizing the approach in Korea. Activity in other locations was not given equal consideration. Specifically development, linkage, institutionalization and use at the earliest possible date was emphasized for the grain management program component, the RLP farm resource allocation component, an expanded agricultural-nonagricultural interface component, and an improved demographic component. Further, it was stressed that building the institutional linkages and training activities needed additional attention to provide a sound base for continuation of the effort in Korea beyond the MSU/AID involvement. This document reflects these concerns.

The evaluation of the project in early 1974 made it impossible to place previously developed proposals for extending AID/csd-2975 before AID/W and its Research Advisory Committee prior to the spring meeting of 1974. Consequently, the project has been twice extended by Amendments 7 and 8. Amendment 7 amended the scope of work and provided funding through 30 September while Amendment 8 further amended the scope of work. Further Amendment 8 provided salaries for four workers in Korea for 12 months each in the period 7/1/74--7/31/75. Amendment 8 presumed that an effort would be made to extend the project on a longer term basis and that such an extension would provide a modified plan of work for the four workers in Korea starting January 1, 1975.

In Korea

Work in Korea is organized to improve (or add) components to the existing Korean Agricultural Sector Simulation model which is in NAERI and provides the analytical base for the Korean Agricultural Planning Project in MAF. Each component is identified below, the work done to September 1974 is described and plans for the October 1974 - June 1976 period presented. Obviously, the present KASS model needs improvement. It could not be otherwise with the general, systems-science, simulation approach, itself, still being in a research and development stage. to date are only preliminary with promise for greater accomplishments in the future.

A. Input/Output Component

1. Present State

a. Simple unconnected two-sector component used in the original KASS model is still intact and operating.

b. Teigen has done some preliminary work in connection with the international trade work in identifying a 19-sector I/O aggregation of the BOK model.

c. By 15 September 1974 a 19 sector I/O will be conceptualized and conceptually linked with KASS (a) to feed nonagricultural incomes (1) into the urban demand component and (2) into farm households; (b) to indicate urban labor force employment; and (c) to deliver agricultural related input to the rural sector.

2. Plan

a. Operationalize this component by 30 November 1974.

b. Empirically link to the rest of the KASS model by 31 January 1975.

c. Generalize for inclusion in the software library by 31 March 1975.

B. The Simultaneous Equation Annual Price Adjustment (SEAPA) Urban-Demand Component

1. Present State

a. As of July 20, SEAPA was technically working and linked with the urban demand component but linkage to the RLP still had technical problems.

b. Urban demand elasticities for grains are improved somewhat over those in original KASS version.

c. Import/export mechanism is linked and operating in the urban demand SEAPA component.

d. By 15 September 1974, technical linkages between SEAPA, urban demand and RLP will be complete.

e. By 15 September 1974 an improved more consistent set of price and income elasticities for the urban demand component will be complete.

2. Plan

a. Reorganize KASS model structure to eliminate time phasing problems with rural demand and prices by 30 December 1974.

b. By 30 December 1974 complete a KASS special report detailing the policy tradeoffs between domestic pricing and production and import/export activity particularly for grains.[1/]

[1/] Lloyd Teigen will be doing the major part of the work on this during the final stage of his stay here. He will be leaving just before Thanksgiving.

C. The RLP Component

1. Present State

a. RLP in the three region version is technically linked to KASS at NCC but only with artificial constraints imposed on the SEAPA produced prices.

b. An LP in national mode is operational in test phases at KIST. The RLP in the national version is being operationalized independently at KIST.

c. Work on linkage problems at NCC will be complete by 15 September 1974.

d. The national version of RLP will be linked to SEAPA at KIST BY 15 September 1974.

e. Additional activities will be built into the RLP reflecting capital usage and mechanization by September 1974.

2. Plan

a. In conjunction with Bauersachs in Bonn and deHaen in Goettingen a KASS working paper will be developed describing the RLP linkage to KASS, and reporting on policy run results by 31 December 1974.

b. Bauersachs or deHaen will come to MSU and possibly Korea for up to a 10 month period between June 1975 and June 1976 to generalize the RLP component for the software library and to perfect application in Korea.

D. The Population Component

1. Present State

a. Model component is in the same state as reported in previous KASS publications and as critiqued during the Airlie House project evaluation.

b. Preliminary thinking about changes in the component suggested by Craig in section 1 of the evaluation statement has been done.

c. Work has been done with John Sloboda, a Harvard graduate student on Fulbright in Korea, on developing a 6-12 month research plan and a Ph.D. thesis plan for evaluating and improving the rural/urban migration mechanism in the KASS model. Inquiries as to possible financing sources for this work are now in process, the possibilities here being through Craig's office or an extension of the Fulbright grant.

2. Plan

a. By 30 October 1974 complete a KASS working paper which will later become an integral part of a revision of KASS special report 6 or, more appropriately, a new KASS special report covering the following changes in the population component.

1) Update base to 1970 population and agricultural census figures.

2) Assume the agricultural labor supply as a residual (as before) and set up (a) link to new I/O for determining migration necessary for labor participation required in the nonagricultural sector and (b) mechanisms to deliver agricultural labor to deHaen's RLP.

3) Incorporate modifications suggested in section 1 of the Craig evaluation report.

4) Reconcile and merge the Beegle and the Carroll fertility pattern assumptions.

b. Review existing migration research in Korea to determine stable regional patterns if any and apparent economic and social determinants of migration and build these to the extent possible into the KASS model at that point. This would be primarily done by John Sloboda if he gets funded.

c. By 30 March 1975, publish a revised KASS Special Report 6 or a new one with the results of 1 and 2 above incorporated.

d. Further theoretical work on migration linkages to economic and social variables, further conceptual breakdown of food demand and labor supply by age and sex groups needs to be done. This work under direction from MSU and Korean personnel in Korea should be done at MSU, however, where researchers can be in close contact with economists and sociologists working in this area. A theoretical routing to be investigated since the Todaro/Harris model has never been empirically proven is to go back to some of the work done on the Resources For the Future project in estimating discounted lifelong expected earning streams as a possible basis for the economic differential providing for pushes and pulls in migration.[1/]

[1/] Johnson, Glenn L., Project Director/Leroy Quance, The Overproduction Trap in U. S. Agriculture, Baltimore: Johns Hopkins Press, 1972.

E. The Livestock Component

1. Present State

a. Presently used projection procedures in the livestock bureau in MAF are now computerized. These include demand and supply of livestock products, livestock numbers, and feed requirements.

b. Work with the livestock bureau continues in order to build greater refinement and some additional sophistication into these rather simple projections.

2. Plan

a. Ahn, C. B. will work on the livestock component as his special exercise during the period September 1974 - September 1975 as a participant in the MSU/AID development study program.

b. Before his departure from Korea, Ahn along with Carroll and Miss Cho will roughly sketch the requirements of the livestock component and outline the continued complementary work to be done by Miss Cho and another yet to be identified Korean counterpart at NAERI.

c. By 31 March 1976 Ahn, with the help of Abkin, will complete incorporation of his livestock component into the KASS model.

d. By 30 June 1976 a KASS special report will be published on this component.

F. The Grain Management Component (GMP)

1. Present State

a. The full GMP is conceptualized (minor modifications in structure will be required as testing, tuning and operationization occur).

b. A modified version is being operationalized for linkage with KASS.

c. Portions of GMP dealing with grain demand and pricing are now operational and being used by MAF and EPB.

d. The grain policy task force with Dr. Kim at NAERI; Dr. Moon, Pai Young, KDI; and representatives from the food bureau, MAF, and price stabilization office, EPB. Gibson, Teigen, from KASS and Mangum and Rossmiller from KAPP will continue to develop and analyze alternative grain policies using additional components of the grain management model as they come on line.

e. Gibson on home leave in August will meet with Manetsch and graduate committee to finalize outline and plan for finishing thesis. While in East Lansing, he will complete technical linkage and debugging of GMP model routines.

2. Plan

a. By 31 December 1974 we will have a tentative operational model behaving similar to reality to use in making policy runs and for use by MAF and EPB. This depends on

1) training a Korean counterpart how to use the model.

2) Korean Counterpart research on estimation to the parameters required in the model.

Dr. Kim indicates full cooperation here.

b. By 30 April 1975 the thesis completed by Gibson will include use of model to advance adaptation of control theory to this type system, completion of policy runs and sensitivity testing.

c. By 30 June 1975, publication is planned of a KASS special report on the GMP by Gibson and Korean counterparts. This includes model description, user's manual information, results of sensitivity tests and policy runs.

d. By 30 September 1975, Korean counterparts in NAERI, MAF and EPB are to be fully conversant with model, capable of using it and analyzing its output, and with some capacity to modify it. This does not include new structural model development which proceeds in the professional circles of the world of which Koreans are now a part. Gibson will return to East Lansing at this time.

e. At MSU by 30 June 1976 Gibson will

   1) Generalize the GMP for installation in the software library wherever it is then located.

   2) Link the appropriate simulation language package to the GMP.

f. During this period 30 September 1975 - 30 June 1976 he will also

   1) Make necessary consultation trip or trips to Korea to install the simulation language package in the Korean version of the model and to provide assistance in further structural model development.

   2) Provide technical assistance support in application of GMP in at least one other location if requested and funded by

AID and agreed to by MSU. A question on this component of whether or not another structural iteration needs to be done starting in the fall of 1975. If that proves necessary, there will be a question as to whether Gibson should remain in Korea to do make the iteration on the Korean version or whether he should return to MSU to do that structural revision when he generalizes it for the software library.

G. Yield Determination Component

1. Present State--Lee, J.H., developing this component at MSU as thesis topic.

2. Plan

a) Lee, J. H. is due to complete the thesis (in form to be reproduced for distribution as a project report) and return to Korea 31 December 1974

b) Lee, J.H. is to work with KASS on a <u>part-time</u> basis after his return to Korea to incorporate his component into KASS model. Abkin will help. The linked components will be operational by December 1975.

c) By March 1976 a KASS special report on this component with policy runs will be completed.

Further Methodological and Theoretical Development Mainly in East Lansing

Work will concentrate on further development of computer simulation models and components based on: (1) experience in using them under field conditions, and (2) advances in relevant theories and quantitative techniques from appropriate disciplines, and (3) incorporation of various specialized quantitative techniques from different relevant disciplines, especially economics and systems science.

MSU has a contract with the Korean Government to provide technical assistance to the Ministry of Agriculture and Fisheries in the areas of policy analysis, agricultural outlook, and program and project evaluation under the Korean Agricultural Planning Project. That project is composed of both Korean and MSU personnel and is in the action end of ROK. The scope of work for this project is attached as Appendix A. The R and D work on theoretical constructs, conceptual bases, models and data systems necessary to improve the KASS model for backstopping and contributing to the objectives of KAPP are at the frontier of the development of the general, systems science simulation approach in several respects.

Conceptualization and field application of system simulation methodology under Contracts AID/csd-1557 and 2975 have revealed a number of issues for which adequate economic theory has not been developed. In addition, the broad systems approach quickly brings home the fact that development problems and their solutions are multidisciplinary in nature. Once this fact is established it is no surprise that serious theoretical inadequacies and gaps are apparent in most of the relevant disciplines.

A key need is to better understand how producers, consumers and public decision makers handle normative knowledge,[1/] what values are important, how and why they may change through time, and how they affect behavior. This kind of knowledge is necessary in order to then take the next step of modeling the decision rules which determine producer, consumer and public decision maker behavior.

More specifically, a major difficulty exists in modeling the optimizing criteria and decision rules by which farmers, particularly if they are subsistence farmers in the transformation process of becoming commercial farmers, allocate their resources, determine their household consumption patterns, decide on investment and disinvestment in modern and traditional capital; decide to transform underemployed labor and traditional capital into other forms of capital; decide if, when, how, and where to migrate; and decide on family size. These decisions are complicated by technological, social, political, institutional, cultural, psychological, and economic factors have an influence. Further, since all of these factors are dynamic, the problem of modeling a system to include learning behavior, dynamic change in people, institutions and technology, and reaction behavior becomes important. During the proposed extension of the contract the MSU team will contribute to theoretical framework and the methodology to model the behavior of the farm firm household as a producing, consuming, reproducing,

---

[1/] What Manetsch refers to as "needs" in the quote at the beginning of this document.

adaptive and learning entity over time. Special attention will be given to "adaptive" economics. These same issues are important in the agricultural marketing and input subsectors and many of them are important in understanding the interactions which take place within and between the agricultural and nonagricultural sectors as well. In the 1 April - 15 September 1975 period, MSU in cooperation with TAB will organize and operate, at TAB expense, a TAB conferenc to bring together outstanding expertise in the key disciplinary areas needed to address the above issues. Included in addition to appropriate economists will be researchers in identification and estimation , adaptive control systems, control theory as it relates to management of large dynamic systems with multiple inputs and outputs and others as deemed appropriate. The objective of this conference to be held early in the contract period, will be to chart directions for subsequent research under this contract, other arrangements between TAB and cooperating universities, and in TAB itself that are likely to have high practical payoffs.

In addition to the close coordination and integration of the social science disciplines, general systems-science, simulation approach requires contributions from the physical and biological sciences as well as from statistics, mathematics, computer science, and of course, systems science. In each case, personnel from the particular discipline and working as part of a multidisciplinary team, could make disciplinary research arguments similar to those above with respect to economics and the other social sciences and to those below with respect to systems science. MSU will stand ready under this contract to participate in conferences with bio-physical scientists on general, systems-science modeling.

While this contract does not now provide support for the above two conferences it would be possible for MSU, TAB and other agencies to organize such a conference under a variety of possible subcontract, contract, I.P.A., "in-house" and other arrangements.

In system science there are at least three areas where further research will lead to more effective simulation models. The first of these is in the area of parameter estimation and model identification. Modern developments here (Kalman filtering and other dynamic methods) can improve estimates of the parameters which go into models and hence improve the ability of models to represent the past and present behavior of the real world. These techniques provide additional means of validating models and can lead to more reliable conclusions regarding the consequences of alternative decisions. Relevant theoretical techniques will be identified and developed. This can subsequently be used in the Korean grain management model in order to improve its parameter estimates and ability to reproduce real-world behavior. This work will be carefully coordinated with that of KAPP in defining data needs and in specifying data acquisition and processing procedures. The contract work done to date by Buchner is applicable to this problem and will be completed and expanded, if contract resources permit, as one approach to the problem.

A second area in which system science research can contribute in terms of more effective decision making in LDCs is in computational techniques to find the set of decisions that optimizes a criterion of interest to decision makers once such a criterion is defined. Recent work in systems science in the area of optimal control theory and dynamic nonlinear programming is potentially applicable to the problem of decision making over time to optimize a criterion of interest to decision makers. Systems science concepts in conjunction with relevant theories and concepts from economics, political science and philosophy can make a contribution to advancing the knowledge in this area. This work has been started

under this contract by Marc Buchner; a manuscript will be ready for publication in 1975.

A third area, related to the second, is the area of cybernetic control of complex dynamic systems with many decision variables and performance variables or objective functions to be simultaneously kept within desired limits. Again, relatively little work has been done to use these concepts in predicting economic behavior or in managing public systems (grain management, price stabilization, etc.). Research and development work will be done to use adaptive learning models of farm decision making in general, systems-science simulation models including the development of prototype models as appropriate. The farm simulation developed by Kim, Dong Min at MSU as a training program project will be useful in providing insights for model development. The object here is improved estimates of private behavior. Various promising aspects of modern control theory will also be applied to the complex problem of price and inventory control in the Korean grain management model. The objective will be improved prescriptions for public Korean decision makers. By the spring of 1975, a modest report on work in this area will be complete and suitable materials will be ready for placement in the then available software libraries. Part of the work will be cooperative with Koreans.

To quote the present contract "The criteria for verification of the sectoral model, or its components will include (1) logical, internal consistency of the model, (2) consistency of the model with other formulations based on independent information, as reflected in ability to 'predict and to track reality,' (3) the clarity of the model and the capacity of other people interested to understand it or use its results and (4) the workability of the model when used to solve real-world policy, program, and project problems and when subjected to sensitivity tests."

The first deals with the logical or analytical truth. The second deals with the question of whether model structure and output agrees empirically with experiences with the real world. The fourth criteria has to do with capacity to solve real world problems and has both normative and positive connotations; in reality, it is a special case of the second as neither the first nor second criteria preclude the normative unless one accepts the constraints of positivism. The workability criteria is commonly advanced by pragmatists whose prime interest is in problem solution and who believe that independent positive and normative knowledge are impossible in which case the first two tests would be unnecessary. Because, the general, systems-science, simulation approach followed herein is general or eclectic, philosophically speaking, we include all four criteria. The AID Research Advisory Committee in their May 1972 review of the project recognized the problems of validation and verification. They stated the following:

> The Committee has a high regard for the progress the MSU team has made at both the methodological and operational levels with the generalized simulation approach to agricultural sector analysis. Testimony by both MSU and Nigerian and Korean representatives indicate that the flexibility of the approach has given it a level of "credibility" at the administrative and policy levels.
>
> There does remain, however, the unsolved problem of model validation. At present procedures for validation "in the small" - for the separate micro-modules - seem more advanced than for validation "in the large" - for the macro-implications of model projections. This is an issue to which the MSU project should, consistent with the extensive experience of its staff, give considerable attention..

One of the papers recently commissioned by the American Agricultural Economics Literature review committee deals with simulation. That paper places heavy emphasis on the rather <u>positivistic</u> verification and validation techniques of statisticians. By June of 1976, a technical paper on verifying general, systems-science simulation models will be prepared. It will be of a quality published in a professional journal or as an experiment station technical research bulletin.

Further Development and Evaluation of the Training Programs

The point has been reached in the development and application of the general, computerized, systems-science simulation approach where a main constraint on its productive use is skilled manpower. This is not to say that further methodological developments and experience with use of the approach are not necessary--they certainly are and are provided for in other sections of this document. It is to say that substantial benefits are likely to be derived from more professionals well trained in developing and applying this approach to a wide range of development issues. The AID Research Advisory Committee in the results of their May 1972 review of this project recognized this by stating:

> It is the judgment of the Committee, of the MSU team, and of the Korean and Nigerian participants at the review that much greater attention will need to be given to specialized non-degree oriented training if such [indigenous staff] capacity is to be adequately institutionalized. The Committee urges the MSU project director and senior staff to given particular attention to the training effort needed to meet this objective. The Committee urges the AID to make sure that the training effort is adequately funded. It appears likely that both the training activity and frequent consultation with MSU personnel will be required beyond the term of the present contract (June 30, 1974). The AID should make provision for a continued linkage between the national sector simulation and program analysis efforts in the two countries and the staff capacity at MSU beyond the term of the present contract.

MSU has taken this admonition seriously and has developed and placed a training program in effect.

The prime focus of that program is on training personnel from host country, donor, and lendor agencies and U. S. universities and agencies in the use, adaptation and further development of computer simulation models for applications in host countries and in national and international lendor and donor agencies. Training programs are conducted at MSU and in conjunction with host country, national, and international institutions.

These training activities continue to be important in establishing the international and national linkages and capacities to use computer simulations in designing, analyzing and evaluating developmental policies, programs, and projects and are helping to develop capacity to respond to training requests from the U. S. government (including its overseas agencies), international agencies, foreign governments, and grantor and lendor agencies.

The MSU Development Analysis Study Program is a coordinated package consisting of three components--a one-year basic study program for modelers and analysts, a seminar study program (overseas) for administrators and decision makers, and a computer programmers study program of variable duration from three months to one year (either in the U.S. or overseas). With a projected optimum yearly enrollment of 20 students in the basic study program component, the capacity of the one-year basic study program is limited. Therefore (1) in consultation with AID and host country representatives MSU will select 12 to 15 qualified persons each year for two years (74/75 and 75/76) to go to MSU for the basic study program, (2) AID/W and MSU will cooperate in conducting at least one seminar a year for administrators and decision makers in user or potential user countries with mission or other funding not provided in the budget for this contract extension and (3) MSU will run a program for training computer programmers to assist general, systems-science simulation modelers at MSU or in host countries. This still leaves room in the basic study program each year for several domestic, international agency, and other foreign students. Obvious countries needing trained personnel are Korea and Nigeria. Other potential condidates include Philippines, Colombia, Egypt, Thailand, Pakistan, and Turkey

Active participation by AID will be necessary in identifying additional countries for training emphasis.

A pilot training program for producing manpower needed in the application and development of this approach to problems of project, program and policy analysis in both the LDCs and DCs was begun in September of 1973. In subsequent years of the training program (1974/5 and 1975/6) the major objectives will be:

1. To further develop and refine the program and build it up to an appropriate operating level, estimated at this time to be 20 students per year in the basic study program.
2. To offer a set of short and long run training components that will serve the most important needs of LDCs for manpower in this specific area of concern. These will include:
   a. A basic training program of one year minimum duration for producing professionals who can develop and apply decision making models at project, program and policy levels. (In many cases this basic training program would be part of a masters or doctoral program in System Science, Agricultural Economics, etc.).
   b. Short courses of 2-4 week duration for administrators, agricultural economists, agricultural specialists, etc. who need a basic introduction to the systems approach and its application to practical development problems.
   c. Short courses of 3-month duration minimum for computer programmers who will have responsibility for operationalizing decision making models in LDCs.

3. To expand the AID/W funding of about $25,000 provided in the budget of this extension with monies from non/AID sources to a total of $50,000. There is a similar provision on Page 34 with respect to the software library. In case additional funding for the library is not obtained, the software library funding of $25,000 will be used for the training program.

Related to objective one, further development will improve and expand course content, seek improved means of instruction (including further development of teaching aids and materials), improve trainee selection procedures, etc. Also, important questions of allocation of training resources to the three kinds of training outlined above must be resolved. (The mix of people produced will have considerable impact upon the effectiveness of applications in particular countries if, as anticipated, trainee selection procedures seek to provide individual countries with a balanced mix of talents required.)

During the period September 1974 - September 1975 the training program will move from the pilot program of September 1973 - September 1974 to a fully operational program meeting the objectives outlined above. In order to do this, activities will be carried out as follows during September 1974 - September 1975:

1. Further develop and refine the course SYS 8xx for the Basic Training Program
2. Further develop and refine the course AEC 8xx for the Basic Training Program
3. Improve trainee selection procedures
4. Develop 2-4 week short course for administrators, etc.
5. Develop 3-month minimum duration short course for computer programmers,

Assuming resolution of funding problems, the activities to be carried out each year of this contract extension include:

1. Continuing consultations with external agencies (AID, IBRD, FAO, etc.) for trainee selection, program operation, etc.
2. Offer Basic Training Program for 20[1/] trainees
3. Offer two 2-4 week short courses for administrators (20 trainees each)[1/]
4. Offer one 3-month short course for computer programmers (20 trainees)[1/]

The following training activities in the contract period are designed primarily to help meet the needs of Korean institutions for expertise in the use, adaption and development of decision making models. While progress has been made in training, NAERI and related institutions are not self-sufficient in trained manpower. Future Korean personnel needs for institutionalization of KASS work can be summarized as follows:

1. two or more persons educated to the Ph.D. level in system science with strong supplemental training in agricultural economics and related disciplines such as computer science, mathematics and statistics and practical experiences in model development.
2. Three or more additional agricultural economists trained to the level of the one year basic study program in system science and related disciplines with practical experience in model use and development.
3. Two or more additional competent computer programmers with experience in programming various kinds of agricultural sector models and quantitative techniques (simulation models, linear programming

---

[1/] These enrollment estimates are based upon the mixes of expertise that have been found productive in MSU efforts to build and implement models in Nigeria and Korea.

models, regression analysis, etc.)

4. A number of key decision makers and administrators well acquainted with a variety of quantitative models and their capabilities and limitations as aids to decision making.

5. Improved cooperation in making key personnel available to NAERI on a part-time basis from other institutions, particularly the College of Agriculture, Seoul National University and other universities.

All of these needs for personnel cannot be met in an 18 month contract extension though with the progress already made in training a significant level can be attained. Following are specific contract activities for the extension period designed to address need in the four categories cited above.

1) Appropriate candidates for training to the Ph.D. level in system science have been extremely difficult to identify within NAERI and MAF. In the past year additional sources of prospective trainees have emerged. In recent discussions in Korea it became apparent that the newly organized Korean Advanced Institute of Science (KAIS) is preparing high quality people in the system science area that might be "rounded out" to meet the needs of the KASS work in Korea. Another possible source of trainees with at least part of their basic work in systems in place is the Korean Institute of Science and Technology (KIST). Discussions between NAERI and these institutions indicate that the latter are open to shared personnel arrangements with NAERI. In the coming months efforts will be directed at selecting suitable personnel from KAIS, KIST and other sources that are suitable for Ph.D. level education in system science and the auxiliary areas. Doctoral or post doctoral training utilizing appropriate elements of the Basic Study Program will proceed for

one or more candidates provided that the costs of travel and maintenance for trainees are met from AID, participant trainee, or other non-contract sources.

2. Two or more additional agricultural economists from NAERI will complete the one year Basic Study Program at MSU. This will increase to a minimum of four the number of Koreans with training at this level (not including two or more Ph.D.'s in agricultural economics who will also have completed the Basic Study Program as part of their doctoral programs).

3. Two additional computer programmers will be trained in the programming and operation of agricultural sector models and related quantitative techniques. Maximum use will be made of training facilities available at the Korean Institute of Science and Technology and on-the-job training as part of on-going KASS work. Achievement of this goal is contingent upon appropriate staffing arrangements within NAERI.

4. At least one, two week seminar will be held in Korea for administrators and decision makers of MAF and related organizations involved in agricultural sector planning and decision makers.[1/] The purpose here will be to give these people background and experience necessary for effective use of quantitative models as aids to decision making.

[1/] Mission funds in the budget for contract extension will cover the cost of this seminar.

Further Development and Testing of a Software Library

Software library work is an crucial , continuing part of the work under this project. Components have been developed to employ different techniques and deal with different parts of an agricultural sector. These are social capital which should be preserved , arranged and stored for subsequent use so that such capital does not have to be recreated for each study. Thus, cost effectiveness considerations require that this project document the components its research and development efforts create. Software documentation is an essential part of this project.

The first conference on the software library conducted at Gull Lake concluded that the project should confine itself mainly to developing a software library facility which would handle its own output but in such a manner that the library could be placed in an international location. However, for reasons noted above, software library work under this projec- cannot stop when and if the software library is placed in one or more central locations such as, say, FAO, the USDA, IBRD or even AID itself. Thus the plan of work and the budget presented herein is continuous for the life of the planned extensions of AID/csd-2975.

The various mathematical model components and computational routines developed as part of the total project and selected closely related, useful model components developed and used elsewhere will continue to be generalized, documented, indexed and made available to "borrowers" at a cost with appropriate documentation and technical assistance. Research and development on a higher-order simulation language, started in the first phase of this project, is needed to facilitate integration and combination of generalized components into configurations required in particular institutional and geographic contexts.

Under contracts AID/csd-1557 and AID/csd-2975, in Nigeria and in Korea, the MSU simulation team has developed and applied a number of components including submodels of production and processing processes; demand and consumption; commodity, regional and national accounts; market mechanisms resource allocation; and the diffusion of innovations. These and other components are of general interest in the developing (and developed) world as they can be adapted and assembled in various configurations to help analyze particular problems

in particular countries. Making KASS component sub-models available for utilization is a basic reason for doing software library work under this contract. A software library of such generalized models can greatly reduce the cost of conducting agricultural sector, subsector, policy, program and project analyses by (1) facilitating utilization of the computerized, systems-science, simulation approach incorporating a broad range of quantitative analytical techniques--e.g., LP models, econometric models, PERT models, state space models, etc.--to the analyses (the approach was shown to be a cost-saver in comparing the KASS and CSNRD experiences); and (2) greatly reducing the likelihood of one team of workers, addressing a particular problem in a particular country, going through the process of developing components virtually identical to models already developed or being developed by another team in another place. For such a library to be effective, its prime concerns must include complete and clear documentation of each of its models and the programming of models must be in language acceptable to a wide range of computer models and sizes.

With this rationale, the initiation of development of such a software library was written into the first phase of this contract. Under that charge, a "Draft Proposal for an Agricultural Sector Simulation Library" was written in October 1972 and distributed for comments. With the Draft Proposal as a basis for discussion, a Simulation Library Working Conference was held in March 1973 with representatives from national and international

assistance agencies to assess the potential demand for such a library and how best to go about organizing it. Associated with the development of the library is the development and operationalization of a general simulation language to serve as a structure and executive for assembling, testing, and operating library components.

With this background, the library and its scope were defined in March 1973 as follows:

1. The software library is viewed as a unit which will eventually[1/] acquire, catalogue, maintain and distribute computer programs and associated documentation. These computer programs are to be for generalized simulation model components and routines designed specifically for the analysis of agricultural development problems and processes. In particular, the library will be designed to set standards of admissibility for programs and documentation; catalogue and index programs and then document them to facilitate their retrieval by users seeking a set of programs for a specific problem analysis; and distribute programs and documentation to users.

2. To enhance the effectiveness of the library, its functions also should eventually[1/] include identification and solicitation of needed models; actively bringing programs and documentation up to the library's standards; and the provision of limited consultation in identifying and applying appropriate library programs. A subsidiary

---

[1/] Underlined words are added as the conference stressed the need to preserve KASS created "social capital" in the form of components and models. Inclusion of solicitated components except for research and development purposes or because they are needed for research under this contract is beyond the purposes of this contract.

function of the library in conjunction with the identification and solicitation of models is to survey and catalog ongoing research in agricultural systems modeling and simulation.

Eventually, it will be essential that the library be closely associated with one or more organizations charged with model development, research and analysis applications, and training. In the short run, these broader functions are being partially carried out in fulfilling MSU's documentation obligations under its AID contract, AID/csd-2975. In the long run, however, once the research, development and field application testing have standardized its scope and procedures, it will be necessary that the library move from MSU to a national or international development assistance agency.

Work presently in process includes:

1. Setting general standards of admissibility of library models and routines, including such criteria as general applicability, compatibility with other programs, and theoretical and empirical validity.

2. Determining levels and develop formats of the documentations to be maintained, where levels include indexes, abstracts, verbal and mathematical descriptions and detailed programming manuals.

3. Setting minimal programming standards to facilitate linking components for specific applications on a wide range of computing facilities.

4. Establishing technical procedures for indexing, cataloging, storing, manipulating, retrieving and distributing library programs and associated documentation.

5. Identifying, reworking, documenting and programming components of the current versions of the Nigerian and Korean models which are suitable candidates for the library in light of the standards set in 1, 2 and 3 above.

6. Proceeding on the development of a general simulation language.

7. Developing and implementing procedures for publicizing and otherwise disseminating information on the library's available inventory and services.

8. Beginning a preliminary survey and annotated bibliography of current agricultural simulation research to identify models and routines in support of ongoing research elsewhere and which may be appropriate candidates for inclusion in the library.

9. Providing technical consulting on applying library programs as requested and as part of the field application testing of usefulness and relevance subject to available resources and the requirements of our contract.

10. Meeting with the Policy Advisory Board as appropriate.

With respect to point 10, the first meeting of the CLASS Policy Advisory Board was held at MSU on 6-7 May 1974. The draft minutes and recommendations of this Board meeting are attached as Appendix B. Major recommendations were that (1) an international conference of potential library users should be held in about May 1975 to introduce the library and services it can provide and (2) library personnel should concentrate over the next year on (a) including in the library a "critical mass" of KASS and Nigerian components to make the social capital produced under this contract available to users, and a basis for a library services demonstration at the user conference indicated under point 1 above and (b) further development of the user simulation language for interaction with the library models. Figure 2 shows the minimum set of components and the linkage configuration deemed necessary to provide a critical mass for the library. All except a simplified production component exist as part of the Korean and Nigerian models but must be generalized, documented and brought up to admissibility standards of the library. The population component is already a library entry. Additional suggested library components during the next year are a livestock component based on the Nigerian model and an "outside" component developed around a part of the NIRAP model under development in ERS, USDA. This outside component is included as the USDA is one potential eventual location for the library.

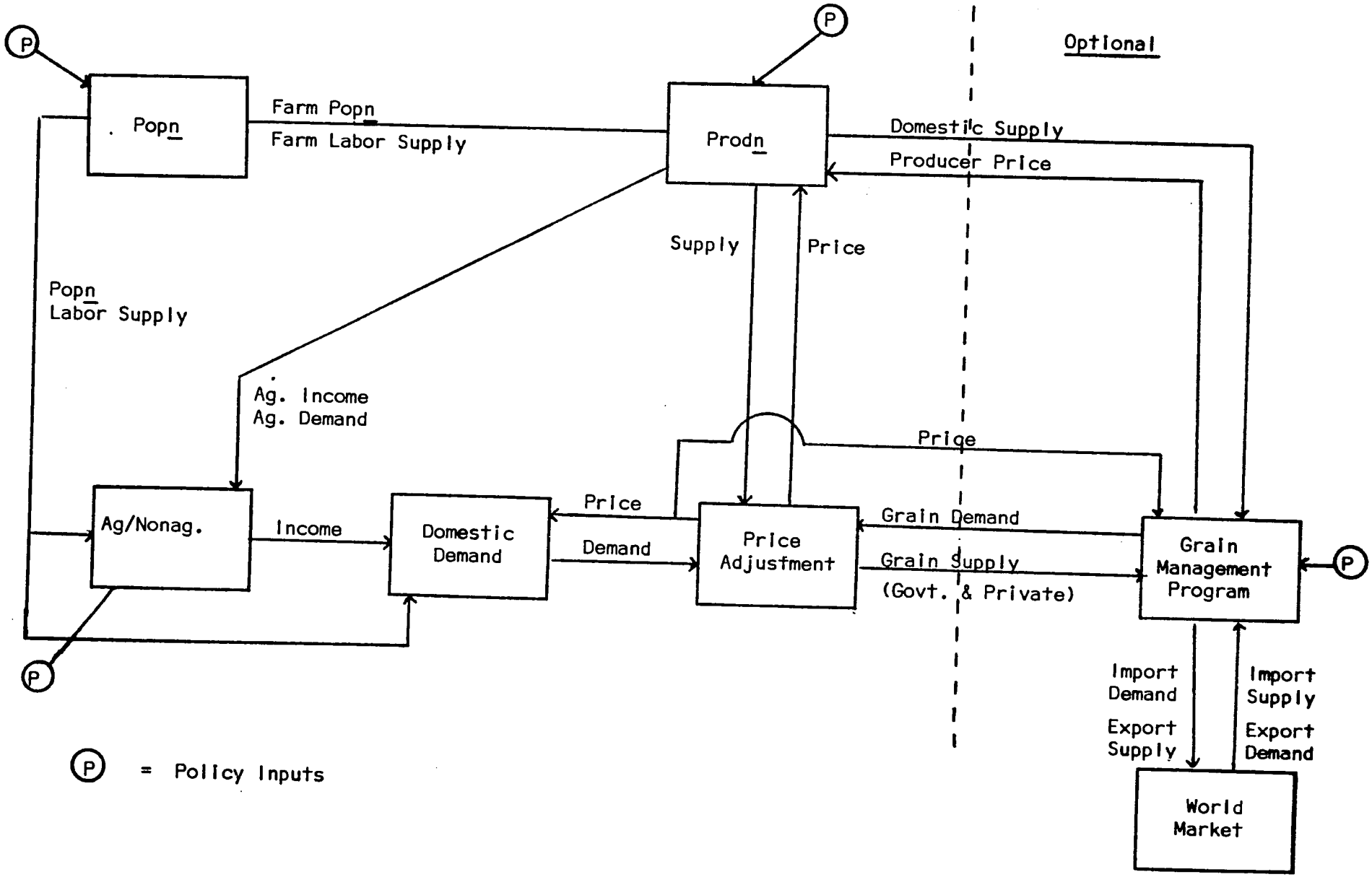

Figure 2. Software Library "Critical Mass" of Components

Obviously, the above work represents only a beginning, much of the emphasis necessarily being on start-up activities. In the 18 month work plan below, the emphasis will shift to maintenance, growth and application with ongoing evaluation of operations. The field application of library materials will provide support for and feedback to the research and development activities concerned with the library, and will be coordinated with, and, in many cases, carried out by personnel working on other project activities or other projects. If the work of the library exceeds the needs of this project, non-AID funding will be sought to help support such expansions. In addition, plans will be made and implemented for transferring the library to a national or international development assistance agency.

The work plan from January 1975 to June 1976 includes:

1. In consultation with AID/Washington and the Advisory Board, and based on the library's experience in actual applications, to plan long run institutionalization and funding of the library elsewhere than MSU. Ideally this would be in one of the national or international development assistance agencies and in at least one domestic agency, perhaps the USDA. It is targeted that by the end of 1975, the establishment of the library at a non-MSU location will be accomplished or non-AID funding will be available to continue its development at MSU.
2. To expand the AID/W funding of about $25,000 provided in this budget with monies from non-AID sources is a total of $50,000. There is a similar provision on page 34 with respect to the software library. In case additional funding is not obtained for the training program the $25,000 for the software library will be available for use in the graining program. Such a development would be far from optimal in the judgment of project personnel and leadership.

3. To continue the development of the general simulation language which will tentatively be operational by 31 December 1974.
4. To continue, although more comprehensively, surveying and maintaining an annotated bibliography of ongoing agricultural simulation research in support of our own work and for dissemination to other workers in the field; and acquire a limited number of library components as they are identified in the survey.
5. Continue to adapt for the library, models and routines developed in connection with MSU's agricultural systems analysis and research work carried out under this contract. Included in the library by June 1976 whether it is at MSU as part of the project's documentation or is located elsewhere will be:

   a. Process and subject models

      (1) Demographic cohort survival accounting birth, death and migration rate exogenous

      (2) Population, birth, death and migration rate endogenous

      (3) Demand SEAPA

      (4) Government and private grain marketing (GMF)

      (5) Multi-sector macro-economic model linking agriculture and nonagriculture from the I/O component that Abkin will be working on

      (6) Extension, diffusion and projection of yield and input demand components from Lee, Jeung Han's thesis

      (7) A simple production component

   b. Utility routines

      (1) Distributive delays

      (2) Table lookups

      (3) Output displays

      (4) Gradient search optimization package for parameter estimation and policy decisions (Marc Buchner's work)

      (5) Generalized LP simulation interfacing package (GLIMPS package Bauersachs is working on in Korea)

      (6) An accounting package

6. Test the library system by supplying library programs, documentation and technical consulting in support of analysis and research work in a limited number of new countries under this project and as requested by host countries, international and domestic agencies, subject to available resources.

7. Cooperate with the ongoing training program at MSU by supplying library programs, documentation and expertise as needed.

8. Based on ongoing experience with the operation and application of the library, continually re-evaluate and modify as necessary the library's organization; and scope of its inventory, services and activities; the simulation language; and its documentation and programming standards.

V. STAFFING PLAN

The staffing plan for the January 1975 to June 1975 period provides for East Lansing, Korean and third country personnel. For Korea, MSU and Korean staffing are coordinated and presented herein though the budget covers only MSU personnel. This plan relates MSU staff to tasks and to Korean counterparts. A summary Table indicates the general composition of the MSU staff from January 1 to June 30, 1975 and for fiscal 1976.

Carroll will

1. Outline with Ahn, C. B. the general structure of the livestock component to be built by Ahn at MSU. Work out scope of work for Miss Cho, Livestock Bureau and NAERI counterpart for additional work to be done with the livestock bureau during Ahn's absence from September 1974 to September 1975.
2. Complete steps 1 through 3 of the population component plan by 30 March 1975.
3. Return to MSU to (a) take charge of building the software library to critical mass level by generalizing and documenting the restructured population component, the SEAPA demand component, the yield determination component, (b) oversee and direct the work by Bauersachs or deHaen and Gibson on the components of the RLP and the EMP respectively.
4. Work on restructuring the KASS model, hopefully with Keith Olson, to make the interfacing of components more consistent and efficient.

Abkin will

1. Complete an I/O component for the KASS model by 31 March 1975.

2. Consult with Lee, J.H. on incorporation of yield component by March 1976.
3. Consult with Ahn, C. B. on incorporation of livestock component by June 1976.
4. Become the systems science member of the four to five year plan task force.
5. Become the systems science liaison between KASS and KAPP after Teigen's departure.
6. Work on adoption and incorporation of simulation language packages toward the end of this extension in 1976.

Thodey or another "high caliber" agricultural economist

1. Become the agricultural economist liaison between KASS and KAPP after the departure of Teigen -- this requires that this person be in Korea in 1974.
2. Develop a more realistic price expectation mechanism possibly of a Nerlove type but likely extended to include the approach Mel Lerohl used between the SEAPA and the RLP. 1/
3. Develop and install a rural demand model to parallel the urban demand model. Seong Woo Lee at MSU is starting work on it but is likely to require assistance.
4. Estimate nonreversible demand curves for the demand model.
5. Become the agricultural economist KASS member of the grain policy task force.
6. Become the agricultural economist KASS member of the fourth five year plan task force.
7. Develop a lagged price adjustment mechanism for SEAPA.

1/ See Johnson and Quance, op cit

Teigen will

1. Complete SEAPA urban demand linkage with RLP.
2. Work with Korean counterpart in estimating improved urban demand coefficient.
3. Complete KASS special report on international trade, domestic price policy tradeoffs.
4. Cooperate with deHaen and Bauersachs on the RLP working paper.
5. Depart Korea approximately Thanksgiving 1974.

Johnson will be mainly on campus 1/4 time except for participation in short term overseas training programs and project development missions. He will assist with administration and focus on investment/disinvestment components, decision making behavioral models, and the relationship between bio-physical and social components.

Manetsch will be on campus 1/4 time with major responsibilities in the training programs and in developing systems science applications. He will also participate in short-term overseas training programs and serve in short-term overseas capacities.

Rahimi will serve mainly on campus on a 1/4 basis working on advanced system science applications to sector analysis.

Rossmiller will serve mainly on campus as project leader and professor in the training program with repeated supervisory missions to the field.

Two additional systems scientists will be recruited to work in the training program and library on campus on a full time basis. Their salaries are not provided for in the attached budget.

Short term consultants will include one trip for Gibson on the grain management program, at least one trip for Bauersachs or deHaen on the RLP, one trip for Carroll on the population component and on data systems, a trip for a consultant such as Phillips or Sorenson on the grain management component and on a world grain model that Kim, Dong Hi wants to develop, and two to six trips for Rossmiller and/or Johnson.

Korean Staffing. Kim, Dong Hi, Director NAERI, plans to put together both a grain management task force and a fourth five-year plan task force. The latter will remain intact at least through 1975 and will probably remain intact until the fourth five-year plan becomes implemented. These task forces are crucial institutional structures to use the KASS model in developing that portion of the fourth five-year plan that MAF develops and in managing Korea's food and feed grain system. The grain policy task force will remain intact for however long it appears necessary. Dr. Kim is recruiting a Korean consultant or a Korean contract employee to become involved in questions on long-term food strategy to question whether the self-sufficiency goal can be satisfied, the goal itself and alternatives to it; again, the regular KASS model is well suited for addressing such questions. Another large issue in Korea is area development including water resource development. KASS will link into this through Dr. Duvick in KAPP. Land use policy and land tenure issues will be prominent and involve MSU through KAPP to KASS via Fred Mangum. Another area prominent in Korean planning is marketing. The argument goes that MAF wants to become much more heavily involved in market control but has backed off because they do not know enough about how the markets are functioning. More good descriptive work is needed. The Director of the Economics and Sector Analysis section of TAB could advantageously investigate this area for a TAB effort involving universities other than MSU. In grain management, of course, there is the

grain policy task force that will be a major user of the grain management component and interactor with Gibson as he continues to develop the component. Lee, Hul Bok is the computer programmer who is working primarily on this part of the project. Estimation of demand equations both for the GMP and for the urban rural demand components in the KASS model will be taken up by Hwang, Hong Do who is returning from Australian National University where he received a masters in agricultural economics. The livestock work that will be continued in Korea while Ahn, C. B. is at Michigan State will be taken care of by Chung, Sung Rae with Miss Cho, the computer programmer, working on it. The SEAPA urban demand and RLP work will be covered by Kim, Sang Gee while he is in Korea; however, he will be going to Michigan State for the development training program and will work on a project there related to the RLP. Lee, Bu Kwan is a computer programmer with a good agricultural economics background who can carry more than a programmers load. The I/O component on the Korean side will be covered by Lee, Sung Jung and Miss Park. The yield component will be covered by Lee, J. H. The land and water resource development work will be done in the NAERI by Dr. Oh, Hoo Sung who has just returned from getting his Ph.D. in Hawaii. NAERI is probably getting part-time services from Ahn, C. Y., now at Ohio State, when he returns. Dr. Kim, Dong Hi is now recruiting for a Korean contract employee for the land policy land tenure work. Ahn, C. B. will be in training at MSU in 1974-75 working on the livestock component while Kim, Sang Gee will be at the MSU training program working in the area of the RLP. Kim, Young Sik continues at MSU on the Ph.D. program where he is doing very well. Kim, Dong Min will be returning from the MSU training program to a major supervisory role in NAERI with respect to KASS.

The staffing table below includes personnel to be supported from AID/W, USAID/Korea, Ford Foundation (hopefully), FAO (hopefully), OTA (hopefully), other USAID Missions (hopefully), MSU, and the USDA (hopefully) after June 1975. The budget breakdown on Page 58b indicates the proposed participation of various supporting agencies and specifies that requested from AID/W and AID/Seoul in this proposal. MSU will attempt to furnish a statement concerning Director Kim, Dong Hi's plans for staffing KASS activities in NAERI over the next two or three years. Hopefully this statement will show staffing by administrative functions to supplement the above discussion of NAERI staffing by research activities.

MAN MONTHS

Item	Period				Total
	Jan. 1, 1975 to June 30, 1975		July 1, 1975 to June 30, 1976		
	On Campus**	Off Campus	On Campus**	Off Campus	Man Mos.
*Professional	24.0	23.5	95.0	38.5	199.75
Programmers	18.0	3.0	36.0	15.0	87.00
Grad. Students	16.5	0	24.0	0	49.25
Administrative	1.0	0	3.0	0	4.50
Secretarial	6.0	6.0	12.0	12.0	42.00
Total Man Mos.	65.5	32.5	170.0	65.5	382.50

*Professionals include all University Faculty Appointments of Professor, Associate Professor, Assistant Professor, and Specialist.

**Some of these available for assignment to other countries by mutual agreement between AID/W and MSU.

VI. BUDGET

The budget figures are for the total MSU simulation project. Costs to AID/W's, USAID/Korea and USAID/other missions are identified. The funding proposed herein is for AID/W and USAID/Korea components only with the exact division of the total between the two left to AID.

Amendment #8 to Contract AID/csd-2975 increased the total amount of the budget by $139,511 to partially fund the activities of the Contract for period October 1, 1974 through July 31, 1975. The amount of $139,511 was a minimum amount to insure that Michigan State University could maintain a minimal staff in Korea on a regular basis until a major revision, extension and budget could be worked out to support the Simulation Project on a full scale basis in Korea and on the campus. $84,203 of this amount is available for use after January 1, 1975.

The budget below calls for $613,550 from AID/W and USAID/Korea for the 18 month period starting January 1, 1975 with the split between the two sources left up to AID and ROKG. The budget shows a tentative split based on the location of personnel. As applied work in Korea feedsthe R and D work in East Lansing and vice versa, AID may wish to make a different split. USAID/Seoul may also want to negotiate with ROKG to cover part of the Korean costs either directly or with a loan from the DLF. The overall program anticipates that third country governments and USAID missions might want exploratory projects to consider general, systems-science, simulation studies of their agrarian problems. The program provides personnel but no budget for such projects; hence, such exploratory projects will have to be financied separately as would any new project in any third country. It is MSU's

BUDGET

Line Items	Period 1/1/75 to 6/30/75	Period 7/1/75 to 6/30/76	Total 1/1/75 to 6/30/76
Expenditures			
Salaries	122,331	222,512	344,843
Consultants	1,000	0	1,000
Indirect Costs	60,304	108,202	168,506
Fringe Benefits	18,349	33,375	51,724
Travel/Trans.	27,719	60,031	87,750
Other Direct Costs	14,910	29,020	43,930
Total for Project	244,613	453,140	697,753
Total Other AID Work	---	21,687	21,687
Total Non-AID Work	---	150,449	150,449
Total Expenditures for Program	244,613	625,276	869,889
Sources of Money			
Amendment 8 AID/csd-2975	84,203	---	84,203
New AID Budget			
Washington	89,830	232,500	322,330
USAID/Seoul &/or ROKG	70,580	220,640	291,220
Total this Ext.	160,410	453,140	613,550
Non-Budgeted AID Sources	---	21,687	21,687
Non-AID Sources Including MSU	---	150,449	150,449
Total Income for Program	244,613	625,276	869,889

desire to participate in such exploratory projects and to help develop new general systems-science studies of agrarian problems. MSU is cognizant of the changes contemplated in AID/university working and financial arrangements and is prepared to work with AID/USAID missions, host governments and other universities on such studies of agrarian problems. In fact MSU has contributed to the development of ideas for alternative working arrangements by assigning personnel to TAB/AID/W on both regular and IPA appointments.

VII. SUMMARY AND OVERVIEW

The proposed activities detailed in this document are based on the successful establishment of the general, systems-science, simulation approach produced under AID/csd-1557 and the Korean work. That success justifies both further R and D work and applications to further refine models and model components and hence develop the approach. Work will continue in a package of four closely interrelated and highly complementary areas (1) field applications, (2) theoretical and methodological advances, (3) software library development, and (4) training program operation. These work areas are highly interrelated with each contributing to the other and each dependent on the other for full realization of the overall project objectives. (Refer back to Figure 1.)

Field application will focus heavily on consolidating the gains made in Korea and on assuring that an operating general, system-science simulation model will be in place when the MSU permanent party leaves Korea--(1) staffed by adequate numbers of trained Koreans to operate and further develop the model for planning and policy formulation analyses; (2) appropriately integrated into the governmental institutional structure to be used by decision makers; and (3) with appropriate and workable institutional linkages to facilitate the utilization of a computer hardware system and to tap the research and data generation capacities in other government agencies, universities and other research institutes. Other field applications are imperative, in order to (1) test further the adaptability of the approach to planning, policy formulation, program development, and project design and execution in a variety of geographic, institutional, economic, political and social environments, (2) test the adaptability and operational flexibility and usefulness of the software

library, and (3) provide entree and in-country support to participants in the training program. The program described above provides personnel for such work with both TAB and non-AID funding but does not provide funding for such work other than in Korea and very limited amounts for Nigeria.

The theoretical and methodological developments are important for disciplinary advances and for increasing the available body of knowledge for better problem solving in the future. In the long run, the training and the generalized set of tools vested in the software library may be the most lasting and useful contribution to economic development in the LDCs eminating from the contract and this proposed extension of activities. The funding provided for such activities herein is inadequate to make optimal use of the social capital created by earlier AID expenditures on AID/csd-1557 and 2975.

The set of activities detailed in this document includes, in AID terminology

1. Institutionalization components,
2. Utilization components, and
3. Research and development components.

Clear cut distinctions along these categorical lines are difficult. Generally however the theoretical and methodological activities in East Lansing as well as further new model development in the field and in connection with the software library fall in the R and D category. The training activities and a major portion of the software library including acquisition, generalization, maintenance, storage, and retrieval of models and components fall in both institutionalization and utilizational.

The field activities dealing with application of the models and the analytical units to problems of concern to decision makers fall in the utilization category. Over time, more and more of the activity in Korea will fall in this category as will the major portion of the field application and technical services delivered in connection with both the software library and the training program. As part of the field activity, emphasis will be placed on establishing linkages with indigenous institutions as well as on establishing the capacity of indigenous researchers, analysts, and policy makers to use computerized simulation models to design, analyze, and evaluate their own policies, programs and projects. Experience in Korea is useful in providing guidelines as to how this should be accomplished.

Further, the MSU program will be responsive to requests from workers in such related sectors as health, education, industry, transport, population, technological research, nutrition, and public administration for consulting services and, perhaps, specially funded joint participation in construction and applying models in such fields.

AID/W is urged to consider covering additional institutionalization costs not included herein by a TAB technical services contract for work in other locations. With technical services funding, the project would have a mechanism for responding to requests for project services by host countries, AID, other international development assistance agencies, and national agencies.

Projects developed in any new location, at whatever level, will require

a complementary set of inputs to carry out a minimum base set of functions. Activities under such a project must include:

1. Training selected indigenous personnel to build, maintain, operate and analyze the results of agricultural systems simulation models. Preferably this training would be started as a prerequisite to the commitment of MSU resources and personnel to a field project. The major part of this training would be provided in the training program at MSU described above and supplemented by in-country seminars, workshops, and on-the-job training activities.
2. Transference and utilization of relevant generalized components and models from the software library described above. New models and components would be undertaken as appropriate, guided by the development policy analysis requirements of the project.
3. Policy analysis applications of the models.
4. Research activities necessary to support model development and policy analysis.
5. Assistance in development of indigenous institutional structure necessary to conduct the above activities on a continuing basis.

It is anticipated that host country agencies and institutions participate through supporting the project financially, administratively, and with personnel.

APPENDIX A

FINAL
Rossmiller
22 December 1973

Michigan State University
Korean Agricultural Planning Project
Scope of Work

Background

Until the inception of the Third Five-Year Plan in 1972, public policy and investment emphasis was directed toward building social infrastructure and expansion and growth of the industrial sector. Agricultural sector development was allowed to lag behind the rest of the economy during that period. With the initiation of the Third Five-Year Plan in 1972, development emphasis shifted to include the agricultural sector. Thus, the Ministry of Agriculture and Fisheries (MAF) has an increased responsibility in planning, policy formulation, program development, and project design and execution.

Situation

The Korean government is interested in agricultural sector development for a variety of reasons. Just under 50 percent of the population is in the agricultural sector and the sector contributes just under 30 percent of total gross national product (GNP). Farm household incomes are low relative to nonfarm household incomes. Rural to urban migration is straining the limits of the absorptive capacity of the industrial sector for labor. Agricultural productivity increases are not keeping pace with the increased demand for agricultural commodities, thus increasing amounts of scarce foreign exchange are required for agricultural imports. Recent shortages of grains in world markets and resultant world price increases have caused these imports to become even more costly.

The various functions related to planning and development activities are located in numerous agencies and offices within and outside of MAF. The relatively low capacity of personnel within many of these scattered agencies for using modern analytical techniques and an organizational structure which precludes adequate coordination of the various functions makes effective planning and development activities extremely difficult.

Recommendations by the Korean Agricultural Sector Study Team (KASS) for an agricultural sector development strategy included implementation of "a policy of improving agricultural policy formulation procedures, programs, project design, and public administration and execution."[1/] These recommendations also call for reorganization of MAF along functional lines and organization for more effective and coordinated statistical and agricultural economics work. Hathaway and Rossmiller, in their KASS paper provided the basis for the broad KASS recommendations.[2/] They went into somewhat greater detail in their recommendations concerning various aspects of the statistics collection and processing system and the economic analysis system to include the functions of policy, program, and project analysis, agricultural outlook, and long run structural economic research.

[1/] Rossmiller, G. E., et al., Korean Agricultural Sector Analysis and Recommended Development Strategies, 1971-1985. Ministry of Agriculture and Fisheries, Seoul, Korea; and Department of Agricultural Economics, Michigan State University, East Lansing, Michigan. 1972. (Also translated into Korean.)

[2/] Hathaway, Dale E. and Rossmiller, G. E., "Organization of the Ministry of Agriculture and Forestry," Republic of Korea, Michigan State University, June 1972.

MAF is now prepared to proceed with more precisely defining operational activities for implementation of many of these recommendations. They are prepared to receive and accommodate technical assistance in three major areas of economic analysis--policy analysis, agricultural outlook, and program and project evaluation--and in the related area of agricultural statistics.

Technical Assistance Required Under the Korean Agricultural Planning Project (KAPP)

This technical assistance should include the following long term personnel: Policy analyst (agricultural economist) working with the Planning Coordinators Office MAF, (2) an agriculture outlook analyst (agricultural economist) working with the appropriate agency in MAF, probably the Statistics Bureau, and (3) a program and project evaluation analyst (agricultural economist) working initially with the Agricultural Development Corporation (ADC) (MAF operational agency responsible for land and water development) but also available to work with other MAF agencies as appropriate. The planning horizon for this project should be a three year period with a review at the end of each year to assess progress and to determine specific project emphases and work plan for the following year. In addition to the above designated personnel, provision should be included in the project for bringing in short term project personnel and consultants as determined appropriate as the project unfolds and in interaction between the long term KAPP personnel and ROK Government personnel with whom they are

working. Finally, coordination is required among project personnel and other international agencies working in related areas.

The KAPP and KASS personnel must coordinate and work closely together in order to exploit the complementarities of the two projects. To assure this coordination between projects a single field project leader will be designated to handle the administrative and personnel details with the backstopping office at Michigan State University, and the internal policy liaison and coordination functions between the two projects.

In order to accomplish their individual and combined KAPP project objectives KAPP personnel must closely coordinate and integrate their activities. Thus a chief of party will be designated within KAPP to handle internal coordination and project policy issues. Initially this person will be the policy analyst but will be subject to later redesignation by MSU in agreement with MAF.

In addition, an agricultural economist within the KASS team has been designated as operational liaison between KASS and KAPP. This individual (an agricultural economist) will be responsible through his close work relationship with the KAPP personnel, for developing, testing, and integrating components into the KASS model which will be of use to KAPP personnel and MAF in the areas of agricultural outlook and program and project evaluation as well as providing specific additional detail required in the model for policy analysis.

Objectives

The general objective of KAPP is to increase the capacity of the Ministry of Agriculture and Fisheries and through them the government of the Republic of Korea for sound planning, agricultural policy formulation,

program development, and project design and execution toward more rapid and effective development of the agricultural sector. General project working objectives include: (1) to understand the organizational structure and the operational processes presently used by MAF in planning and developmental activities and to identify the constraints in these systems leading to ineffective, inefficient and operationally unsound outcomes; (2) to advise on organizational and functional means to eradicate the constraints identified in (1) above; and (3) to do substantive work on current issues, within the scope of the project, to relieve current problems and to provide on the job training in the use of modern analytical techniques and processes for Korean personnel of the Ministry of Agriculture and Fisheries.

Specific Scope of Work for Long Term Personnel

The following details the specific work plans for the agriculture policy analyst, the agricultural outlook analyst, and the program and project evaluation analyst for the three years of the project with particular emphasis on the first year. Short term personnel and consultant help will be brought in as needs are identified and as the long term personnel working in each area along with their Korean colleagues determine program criteria, specific needs, and scopes of work.

The agricultural policy analyst will:

A. In the first year:

1. Identify, define, and describe (a) the institutional structure within which and (b) the operational process through which planning, policy formulation, program development, and project design and execution take place with respect to the agricultural sector within the Korean Government. Particular

emphasis will be placed on the Ministry of Agriculture and Fisheries. From this descriptive base the policy analyst will identify specific structural and process constraints to effectively carry out the above functions and recommend organizational and institutional changes which will facilitate removal of the identified constraints.

2. Analyze and evaluate the MAF long range projections for the agricultural sector for the period 1973-1981, using modern analytical techniques and recommend changes and alternatives, with particular emphasis on increasing and extending the capability of Korean personnel working in this area.

3. Begin to work with Korean counterpart personnel on economic analysis of specific policy issues of importance to the current planning and policy efforts of the Ministry. Advise policy decision makers in the Ministry on request on policy matters and issues, and help them understand the consequences of alternative courses of action.

4. Coordinate own activities and those of Korean counterparts with the operational activities of the KASS team and recommend extensions and the development of new components to the KASS model which will contribute to the planning and policy analysis functions.

B. In the second and third years the work plan is to be determined in light of the first year activities and in interaction between MAF, MSU, and USAID.

The official counterpart for the policy analyst is the Planning Coordinator, MAF. Operational counterparts are the Director, Planning and Budget Bureau,

MAF and Director, National Agricultural Economics Research Institute. Additional assistance will be provided by the Chief, Planning Division, MAF and the Chief, International Cooperation Office, MAF.

The Agricultural outlook analyst will:

A. In the first year:

1. Identify, define, and describe the specific agricultural outlook needs of the public and private sectors. Plan and begin implementation (with Korean colleagues) of an agricultural outlook analysis system, paying particular attention to the priorities and timing of implementation, additional data needs, and program costs.

2. Plan and begin implementation and improvement of the agricultural statistics collection and processing for the development of an agricultural outlook system. This will involve work with a short term statistical analyst consultant on improvement of statistical collection and processing.

3. Further extend the analytical capability of Korean personnel working in the statistical collection and processing system and the agricultural outlook system by actively working with these counterpart personnel.

4. Assist the policy analyst to analyze and evaluate the MAF long range projections for the agricultural sector for the period 1973-1981 as outlined in point A-2, page 6 under duties of the policy analyst.

5. Coordinate activities with the KASS team to exploit to the fullest the KASS model and through the KASS team liaison person, guide the development of changes in the KASS model to better serve the agricultural outlook function.

B. In the second and third years the work plan is to be determined in light of the first year activities and in interaction between MAF, MSU, and USAID.

The official counterpart for the Agricultural Outlook Analyst is the Director, Agricultural Development Bureau, MAF. Operational counterparts are the Chief, Sae Maul Income Division, MAF, the Chief, Farm Economy Division, MAF and the Chief, Marketing and Economic Analysis Division, NAERI.

The program and project evaluation analyst will:

A. In the first year:

1. Work with the Agricultural Development Corporation and the Farmland Bureau, MAF, to extend the capability of those agencies in the use of modern analytical techniques to design programs of land and water development consistent with MAF policy objectives and the third five year development plan, to develop guidelines and rules for choosing among projects of a similar nature and between heterogeneous projects designed to accomplish similar program objectives, and to advise and improve the capability of these agencies in development of project proposals and presentations to funding agencies. Also this analyst will on request review and evaluate existing land and water development program and project proposals.

2. Be available for consultation and active participation in program development and project design and evaluation as requested by

other agencies of the MAF, on domestically funded investment and for loan applications to international financing sources.

3. Work with the KASS team liaison to use the existing KASS model in these analyses and to conceptualize, devise, test, and implement, new components in the KASS model, useful in program and project analysis functions.

B. In the second and third years the work plan is to be determined in light of first year activities and in interaction between MAF, MSU, and USAID.

The official counterpart for the Program and Project Evaluation Analyst is the Director, Farmland Bureau, MAF. Operational counterparts are the Chief, Special Area Development Division, MAF and the Director, Project Design Department, ADC.

General

Within the framework of the scope of work outlined above in each of the three work areas, the official Korean counterparts may ask the respective MSU analysts to perform specific work assignments. Final arbitration of work schedule priorities will be done if necessary by the Vice Minister, MAF in consultation with the KAPP Chief of Party.

Project Personnel

Personnel involved in the Planning Project will be mature individuals with the experience, training, and background necessary for them to provide the technical assistance required and to interact effectively with top level decision makers in the Korean Government.

APPENDIX B

COMPUTER LIBRARY FOR AGRICULTURAL SYSTEMS SIMULATION
MINUTES AND RECOMMENDATIONS
FROM THE MEETING OF THE
POLICY ADVISORY BOARD
6-7 MAY 1974
EAST LANSING, MICHIGAN

Review of First Year's Activities

The members of the CLASS project team presented to the PAB the results of the previous year's work. The standards that have been developed for components, documentation, and programming were discussed. Among the examples supplied were several utility programs and component routines. Under development is an optimization package for parameter estimation and development of policy recommendations. The concept of a language to ease the task of model building and policy analysis was discussed and a demonstration given of the policy analyst's language using a model of the state of Michigan constructed with components generalized from the Korean model. The Michigan model was used to demonstrate the versatility of the language and the library in moving components from the Korean to an entirely new application.

Component Acquisition

There is a definite need for obtaining more components, both from members of the MSU project team and from outside sources. We need to identify problem areas by relating to decision makers. A loose structure exists at present for assimilating outside components into the library, but the process needs to be given more structure. Once these areas are specified, we must show that specific questions can be answered by use of the library's simulation models. We should consider who are our potential customers in deciding upon the inclusion of particular components

in the library. It would be a good idea to take components from an external model such as one from ERS and run them through the component acquisition process. We would then have "real world" acquisitions which would also be useful for demonstration purposes.

Again, it is important for the CLASS team to be looking at what others are doing along these same lines. We want to see how other libraries operate, though it is agreed that CLASS should be more of an active rather than a passive library.

The Ultimate Location

The library has to begin preparing for eventual transfer to one or more outside locations. To this end, the CLASS team must begin building up a critical mass of components to make the library viable. At least one domestic and one international center should be considered. At the various locations, the library could take on different forms suitable to its users. Possible locations include USDA, IIASA, AID/W, IBRD and FAO.

Documentation

Since we will be addressing a diverse audience, several different types of documentation will be needed. Three classes of potential users emerge, each with its own specific needs--(1) the decision maker, (2) the systems analyst, and (3) the programmer.

The documentation must serve two purposes: (1) that of publicity, to generate an interest in CLASS, and (2) as a means of conveying how to make use of the library.

The first function can best be served by the use of abstracts. Within this category two different types are needed, one for the decision maker in nontechnical language and one aimed at the analyst. The abstracts aimed at the decision makers should focus on problem areas that they must actually confront. The second type of documentation falls into two categories. First, there is the component documentation, directed primarily at the analyst. It should explain the component in disciplinary terms and should contain an example of its possible use. Also included here would be the mathematical description of the component. Secondly, there is the program documentation, which contains the necessary information for implementing the program on a machine. Thus, the three types of documentation, the abstract, the component documentation, and the program documentation provide varying degrees of involvement to the user, as he progresses through the successive steps of utilization.

It was also recognized that within academic circles there is a certain stigma attached to "borrowing" someone else's work. Thus, an attempt should be made to overcome this attitude through the documentation wherever possible; some suggestions were: (1) emphasizing the cost savings, (2) pointing out that confidence can be placed in these components since they have been used elsewhere, and (3) emphasizing that the art is in building the model, rather than in programming it.

Symposium

It was recommended that an international symposium be held aimed at the potential users of CLASS. The symposium's purpose would be to make possible users aware of the library and its capabilities and to get

feedback from them. The symposium will serve as a vehicle for "market development." One important feature of the symposium would be a demonstration of interaction with a model using the policy analyst language. The model should be one that all people would agree is a useful problem-solving model, rather than one built for the purpose of demonstration only. Some possible choices were the Korean grain management model, the Venezuelan livestock model, or a model provided by ERS. In order to provide a meaningful interaction, the number of people attending should be kept below 50. A conference committee was chosen consisting of Art Coutu, Leroy Quance, Doug Caton, and possibly Henri Quaix.

The question of funding for the conference was discussed. It was recommended that funds be sought from AID, but with responsibility for the symposium remaining with the project team. The PAB and perhaps some outside agency should make recommendations as to who should attend. The conference can also serve a training function for those who attend.

After the conference, the demonstration should be given to other professional meetings. This will allow for an interchange of ideas with others engaged in similar work.

PAB Operations

Due to the anticipated transfer of the library, the PAB should become progressively independent of MSU. One of the important considerations of the Board should be planning for this eventual move. To that end, members of organizations that could possibly become a home for the library should be invited to PAB meetings as observers. In addition, other people involved in work of a similar nature, particularly from other disciplines should be invited to observe.

Subjects that the Board felt needed further consideration were: (1) how much emphasis should there be in the development of components versus further development of the language (the general feelings leaning toward a heavier push for component development), (2) who would provide funding for further language development, (3) what priorities should be used in selecting the types of components, (4) who should finance user service costs, (5) should CLASS provide user training, (6) should the library provide a data bank and management system, and (7) is there a need for a Technical Advisory Committee.

The subject of Board membership was considered and it was felt that the group should not grow much larger, although it should be well rounded in its composition. Some members felt they would prefer to be on the Board as a representative of their particular organization, while others preferred to act as individuals. Thus, each person will act in whichever role he/she prefers.

Subsequent Meetings and a Chairman

Another meeting of the Board was recommended to be held in about six months. Art Coutu was elected chairman of the PAB.

Recommendations

1. There is a need to keep the MSU group intact with activities continued at or above the present level for at least another year. More library routines must be acquired and a nucleus of components must be generated to enable a transfer of activities intact during the next two years to an as yet undetermined location(s).

2. A symposium should be planned for the spring of 1975 in order to make potential users aware of the library and to generate an interest in it. The conference should be aimed at decision makers, with the emphasis on the role of the library in helping them solve the real world problems they face. Although

primary responsibility for the conference should rest with the CLASS staff, extra funding should be sought from AID.

3. A need exists for an interchange of ideas with the professional community. Following the conference, some of the material presented there should be taken to professional meetings so that others may see what the CLASS team is working on.

4. At the same time other library work should be inventoried if there is anything that would be of benefit to CLASS and if there are important duplications to be avoided and/or regarded as complementary to CLASS.

5. Further work should be done to see that the documentation conforms in practice to the theory set forth in the documentation standards. The language will need continued development with some consideration given to what direction it will take.

6. The Board should remain a small group in order to continue to function effectively. However, it is felt that more representation, particularly from other disciplines is needed. Some persons should be invited to attend, not as members of the Board, but as observers.

7. Another meeting of the Policy Advisory Board should be scheduled for October 1974.

Arthur Coutu, Chairman
Policy Advisory Board

George E. Rossmiller, Director
Agricultural Sector Analysis
and Simulation Project

jmp

OPTIONAL FORM NO. 10
MAY 1962 EDITION
GSA FPMR (41 CFR) 101-11.6

UNITED STATES GOVERNMENT

Memorandum

Return to: Coutu

TO : See Distribution

DATE: April 26, 1972

FROM : TA/AGR, Arthur J. Coutu

SUBJECT: Selected references for RAC review of AID/csd-2975 scheduled for May 5, 1972, at Michigan State University

1. A memo on some issues for the review committee to consider.

2. The final report on AID/csd-1557 "A Generalized Simulation Approach to Agricultural Sector Analysis" - note Chapter 3.

3. A copy of Exhibit I in the AID/csd-2975 contract on the scope of work.

4. A copy of the project summary that was prepared by TA/AGR for presenting the project to RAC in April, 1971.

An agenda for the meeting on May 5, 1971 and a prelimmary report on work in Korea will be sent to you by Dr. G. Johnson.

Distribution

Dr. V. Ruttan - University of Minnesota
Dr. C. Frank - Princeton University
Dr. T. Naylor - Duke University
~~TA/AGR, O. Kelley~~
TA/AGR, M. Cox
LA/DR, R. Suter
NESA/DP, J. Brown
TA/RUR, E. Long
TA/RUR, J. Hoath

Enclosures

4/27/72

Buy U.S. Savings Bonds Regularly on the Payroll Savings Plan

PD-AAE-401 9310536 (13)

AID 1350-1X (7-71)

PIO/T

DEPARTMENT OF STATE
AGENCY FOR
INTERNATIONAL DEVELOPMENT

PROJECT IMPLEMENTATION ORDER/TECHNICAL SERVICES

1. Cooperating Country: TA Bureau

Page 1 of 2 Pages

2. PIO/T No. 3157565

3. ☐ Original or Amendment No. 2

4. Project/Activity No. and Title: 931-0536 Agricultural Simulation Model for Sector Analysis

(1) 2p

DISTRIBUTION

5. Appropriation Symbol

6.A. Allotment Symbol and Charge

6.B. Funds Allotted to: ☒ A.I.D./W ☐ Mission

7. Obligation Status: ☒ Administrative Reservation ☐ Implementing Document

8. Funding Period (Mo., Day, Yr.) From 1/1/75 To 6/30/77

9.A. Services to Start (Mo., Day, Yr.) Between continuing and

9.B. Completion date of Services (Mo., Day, Yr.) 6/30/77

10.A. Type of Action: ☒ A.I.D. Contract ☐ Cooperating Country Contract ☐ Participating Agency Service Agreement ☐ Other

10.B. Authorized Agent: AID/W

Estimated Financing $1.00=		(1) Previous Total	(2) Increase	(3) Decrease	(4) Total to Date
11. Maximum A.I.D. Financing	A. Dollars	520,522			520,522
	B. U.S.-Owned Local Currency				
12. Cooperating Country Contributions	A. Counterpart				
	B. Other				

13. Mission References

14. Instructions to Authorized Agent

The time period of this contract is extended as shown in blocks 8 and 9b. above, at no additional cost to the U.S. Government. Provisions of the existing contract continue. Schedule of actions during the extension is attached.

15. Clearances -- Show Office Symbol, Signature and Date for all Necessary Clearances.

A. The specifications in the scope of work are technically adequate
TA/AGR/ESP, William Merrill — Date

B. Funds for the services requested are available
TA/PPU, M. Mozynski — Date
TA/PPU, C. Molfetto — Date

C. The scope of work lies within the purview of the initiating and approved Agency Programs
TA/AGR, Leon Hesser — Date 12/23/76

D.
TA/RES, M. Rechcigal — Date

E. TA/AGR/ESP, K. Brundage — Date

F.
EA/EAA, R. Ellert-Beck — Date

TA/AGR, D. Clark — Date

16. For the cooperating country: The terms and conditions set forth herein are hereby agreed to

Signature and date:

Title:

17. For the Agency for International Development

Signature: John Gunning

Title: Chief, TA/PPU Program Div.

18. Date of Signature

PPU

AID 1350-1X (7-71)

PIO/T

DEPARTMENT OF STATE
AGENCY FOR
INTERNATIONAL DEVELOPMENT

PROJECT IMPLEMENTATION ORDER/TECHNICAL SERVICES

1. Cooperating Country: TA/Bureau

Page 1 of 1 Pages

2. PIO/T No. 931-0536-3157565

3. ☐ Original or Amendment No. 3

4. Project/Activity No. and Title 931-0536
Agricultural Simulation Model for Sector Analysis (Michigan State University)

DISTRIBUTION

5. Appropriation Symbol: 72-11x1023

6.A. Allotment Symbol and Charge: 402-31-099-00-22-73

6.B. Funds Allotted to: ☒ A.I.D./W ☐ Mission

7. Obligation Status: ☒ Administrative Reservation ☐ Implementing Document

8. Funding Period (Mo., Day, Yr.) From 1/1/75 To 12/31/77

9.A. Services to Start (Mo., Day, Yr.) Between 7/1/77 and 7/15/77

9.B. Completion date of Services (Mo., Day, Yr.) 12/31/77

10.A. Type of Action: ☒ A.I.D. Contract ☐ Cooperating Country Contract ☐ Participating Agency Service Agreement ☐ Other

10.B. Authorized Agent: AID/W

Estimated Financing $1.00=		(1) Previous Total	(2) Increase	(3) Decrease	(4) Total to Date
11. Maximum A.I.D. Financing	A. Dollars	520,522			520,522
	B. U.S.-Owned Local Currency				
12. Cooperating Country Contributions	A. Counterpart				
	B. Other				

13. Mission References: Contract csd 2975

14. Instructions to Authorized Agent

The time period of this contract, csd 2975, is extended as shown in blocks 8 and 9b above, at no additional cost to the U.S. Government. Provisions of the existing contract continue. Emphasis is centered on reporting project methods and accomplishments. Contractor will complete a detailed final report on the project and select an appropriate means of assuring that the final report receives wide distribution to persons and LDC institutions concerned with agricultural sector planning and the utilization of planning models.

15. Clearances – Show Office Symbol, Signature and Date for all Necessary Clearances.

A. The specifications in the scope of work are technically adequate — TA/AGR/ESP, WMerrill — Date

B. Funds for the services requested are available — TA/PPU, MMozyuski — 6/28/77 — Date

C. The scope of work lies within the purview of the initiating and approved Agency Programs — TA/AGR, LHesser — Date 6/27/77

D. TA/PPU, JDurnan — Date 6/25/77

E. TA/AGR/ESP, KBrundage — Date
TA/AGR, DClark — Date

F. TA/RES, MRechcigl — Date 6/27/77

16. For the cooperating country: The terms and conditions set forth herein are hereby agreed to

Signature and date:

Title:

17. For the Agency for International Development

Signature: K. Milow

Title: Chief, TA/PPU Program Div.

18. Date of Signature: 6/30/77

GPO 867-286

Proj. 9310536 (17)
Ser. PD-AAC-401

17-03-45

65p

9310536001703

REPORT OF KASS/KAPP REVIEW TEAM

Based on Activities of the Team
In Korea March 6-13, 1976

In Fulfillment of

Contract Number AID/ASIA - C-1157

REPORT OF KASS/KAPP REVIEW TEAM

CONTENTS

		Page
I.	INTRODUCTION	
		2
	KASS	3
	KAPP	4
	Purpose of the Review	5
	Review Procedures	
II.	THE KOREAN AGRICULTURAL SECTOR MODEL	
	History and Status of the Korean Agricultural Sector Model (KASM)	11
	Accomplishments to Date Using Model	15
	Non-Model Accomplishments	19
	Recommendations	19
III.	LAND AND WATER DEVELOPMENT	
	History and Status of KASS/KAPP Land and Water Activities	25
	Accomplishments to Date	27
	Recommendations	29
IV.	GRAIN POLICY	
	History and Status of the Grain Management Program Model (GMP)	31
	Accomplishments to Date	34
	Recommendation	39
V.	AGRICULTURAL STATISTICS AND OUTLOOK	
	Background and Status of Agricultural Statistics Program	40
	Background and Status of Agricultural Outlook	41
	Recommendations	43
VI.	INSTITUTIONALIZATION	
	Meaning of the Term	49
	Organization and Environment	50
	Recommendations	54
	Manpower and Support Services	55
	Recommendations	59
VII.	TRANSFERABILITY TO OTHER COUNTRIES	61

I. INTRODUCTION

KASS

The project that provided for agricultural sector model development in Korea began in 1971 (Contract AID/csd-2975 with Michigan State University). It followed the completion of a project in 1970 that had supported the development but not utilization of a computerized systems simulation model of agriculture in Nigeria (Contract AID/csd-1557 with Michigan State University).

The objective of the project that began in 1971 in Korea was to further develop and apply the systems simulation approach to agricultural policy and planning problems in developing countries. The selection of Korea as the site for further developing and applying the simulation modeling technique was facilitated by the interest of the Korean government in improving the performance of the agricultural sector and of the USAID mission in an agricultural sector analysis that would identify priority areas for sector loans and grants by AID. The project was titled the Korea Agricultural Sector Simulation Study, or KASS.

Beginning in mid-1971, Michigan State University personnel and Korean technicians worked on an agricultural sector analysis report and an investment priorities study. The two studies were completed in a 12-month period (Rossmiller, G. E. et al., Korean Agricultural Sector Analysis and Recommended Development Strategies 1971-1986, 1972 and Ferris, J. N. et al., Investment Priorities in the Korean Agricultural Sector, 1972). These studies provided a synthesis of quantitative

and qualitative knowledge about the structure and operation of the agricultural sector and made recommendations for policy choices and investment priorities. They were the basis for several policy and investment decisions by the Korean government and USAID.

During the 1971-72 period, a prototype simulation model was developed. It was primarily an accounting model designed to process data and generate projections of production, yields, prices, and other important economic variables in the agricultural sector. This initial version of the model, through its accounting routines, was useful in the completion of the reports but did not address all the behavioral characteristics of the sector. The KASS team then turned their attention to improvement and expansion of the computerized systems simulation model.

During the model development phase -- roughly from October 1972 to December 1975 -- activities under the project concentrated on model development with relatively little effort at utilization.

KAPP

Beginning in mid-1975, a complementary utilization phase involving application of the KASS analytical capabilities to policy analysis and planning in Korea was begun. Early KASS effort dealing with the organization of the Korean Ministry of Agriculture and Fisheries (MAF) had identified organizational and functional constraints to effective planning and policy making in the Ministry. As a consequence, a project was developed under USAID funding for MSU to provide technical assistance to MAF in four specific areas: agricultural policy analysis, agricultural

outlook, project evaluation, and agricultural statistics. This project was titled the Korean Agricultural Planning Project, or KAPP.

While KASS was designed to generate analysis and information inputs for decision making, KAPP was designed to help policy makers formulate problems and utilize analytical results to select among alternative solutions. Thus, KAPP was expected to create linkages between MAF officials and the work of the KASS unit, enabling KASS to interact with decision makers and provide timely and credible information relevant to their problems.

Purpose of this Review

The present report presents the views of the joint American-Korean review team that was assembled in Korea during the period March 7 - 13, 1976 to examine the institutionalization of the analytical capability represented within the KASS and KAPP projects for decision-making purposes and to explore replicability and potential use elsewhere in the developing world.

The team was asked specifically to

a. Ascertain the uses and usefulness of the analytical capability developed by the KASS Division, NAERI for providing analytical input to decision processes in agricultural sector policy, program and project planning by the ROKG.

b. Assess the degree of institutionalization in the ROKG of this capability, including staffing, budget, facilities, and organization.

c. Identify those remaining constraints, linkages, and other activities that would facilitate further utilization of the analytical capacity.

d. Assess the potential for replicability and use elsewhere in the developing world.

To carry out its assignment, the review team examined the experience in Korea in developing an analytical capacity at the national government level for planning agricultural sector development and providing information to decision-makers on the consequences of alternative choices of policies, programs and projects. Its focus was on the usefulness of an analytical capability in Korea rather than on the technical characteristics of models that have been developed. The review team viewed models as tools and primarily concerned itself with the capability for using, adapting and improving models and other quantitative approaches for the analysis of a wide variety of agricultural planning and policy problems.

Review Procedures

The American members of the team were:

George S. Tolley, University of Chicago (Co-Chairman)

Rex Daly, U.S. Department of Agriculture

Lehman Fletcher, Brookings Institution

Warren Johnston, University of California at Davis

Richard Phillips, Kansas State University

Fletcher E. Riggs, U.S. Agency for International Development

The Korean members of the team were:

Hahm, Man Jun, Planning and Management, MAF (Co-Chairman)

Ahn, Choong Y., Choong Ang University

Choi, Byung Hang, National Agricultural Co-operatives Federation

Kim, Jae Ik, Economic Planning Board

Lu, Dong Bae, Planning Bureau, MAF

Moon, Pal Yong, Korea Development Institute

Pak, Ki Hak, Yonsei University

Rhee, Beong Sah, Korea Development Institute

Yoo, Jong Tack, International Co-operation Office, MAF

Prior to the week devoted to the review in Korea, the team members reviewed the documents listed in Table 1 to become familiar with written project outputs.

While in Korea, the review team devoted a part of its time to counselling with members of the KASS and KAPP staffs and their Korean counterparts, in order to obtain further information on the history and status of model development, on applications that have been made to policy and planning and on possible needs for improvement. In this connection, members of the review team talked with Kim, Dong Hi, Director of NAERI and Kim, Dong Min, Chief of the Agricultural Sector Analysis Division of NAERI, and other NAERI staff members, as well as MSU, KASS/KAPP personnel including G. Edward Rossmiller, Michael H. Abkin, David W. Culver, Richard D. Duvick, Forest J. Gibson, Martin E. Hanrathy, Gary R. Ingoaldson and Alan R. Thodey.

Table 1. Project Outputs Studied by Review Team

PAPER OR ARTICLES	AUTHOR	DATE
1. Grain Management Program Simulation Model - Status Report	F. J. Gibson	7/73
2. Analysis of Short-Term Grain Policy Alternatives	Grain Policy Task Force	7/21/74
3. A National Economy Sector Model Linkage Korean Agriculture Non-Agricultural - KASS Working Paper # 74-7	Michael Abkin	12/31/74
4. The National Agricultural Cooperative Federation - An Appraisal - KASS Special Report #1		
5. Rural Infrastructure - KASS Special Report #2	SangGee Kim/Libby	1972
6. An Analysis of New Land Development in Korea - KASS Special Report #3		1972
7. An Analysis of Supply Response in Major Agricultural Commodities in Korea - Special Report #4	Ferris/Suh	1972
8. Agricultural Research & Guidance - KASS Special Report #5	Chung/Miller/Rossmiller	1972
9. Population, Migration & Agricultural Labor Supply - KASS Special Report #6	Beegle/Carroll/Hathaway/Kim	1972
10. Organization and Performance of Agricultural Marketing Systems in Korea - KASS Special Report #7	Shaffer/Song/Suh/Shu	1972
11. Crop Production Data & Relationships - KASS Special Report #8	Kim/Kim/Wright	1972
12. User's Manual for the Korean Agricultural Simulation - KASS Special Report #9		1972
13. A Macro Model of Economic Growth & Income Distribution - An Application of Systems Simulation in the Korean Case - KASS Special Report #10	Kim	1973
14.* Investment Priorities in the Korean Agricultural Sector - Korean Agricultural Sector Study Team	Study Team	1972
15.* Korean Agricultural Sector Analysis & Recommended Development Strategies 1971 - 1985	Study Team	1972
16. Preliminary User's Guide to the Recursive Linear Programming Resources Allocation Component of the Korean Agricultural Sector Model	de Haen	5/73
17.* Developing an Analytical Capacity for Planning Agricultural Sector Development	Rossmiller	7/75

(Table 1 Cont.) PAPERS OR ARTICLES	AUTHOR	DATE
18. Global Modeling of Food & Agriculture: Background to a Possible Approach - Staff Paper	Rossmiller/Johnson/Honradty	8/75
19.* Briefing Charts on the KASS Project - KASS Issue Paper #9	Staff	5/75
20. Approaches to Modeling Off-Farm Migration - KASS Working Paper 74-5	Slobado/Correll	12/74
21. A Proposal for Economic Evaluation of 66 Small and Medium Scale Irrigation Projects in Korea	Duvick/Ro/Kang	
22. Study Proposal for Economic Evaluation & Operation and Maintenance Plan of USAID Loaned Project Areas		
23. Korean Agricultural Project - Administrative Planning Project May 19, 1974 - Dec. 31, 1974	Rossmiller	12/31/74
24. Estimating Future Capital & Labor Needs for ADC to meet Korea's Demand for Rice	Duvick/Kim/Bae	1/75
25. Analysis of Fertilizer Policy in the ROK and Suggested Changes - KAPP Discussion Paper #2	Mangum/Lee	2/75
26. The Importance of Reducing Price Risk as a Policy Objective - KAPP Discussion Paper #3	Mangum/Lee	1/75
27. Improving Market Performance in Korean Agriculture - KAPP Discussion Paper #6	Mangum/Lee	11/75
28. Analysis of Alternative Purchase Prices for Rice in the Republic of Korea	Grains Policy Task Force	9/74
29. The Korean Agricultural Statistics & Data System: Review and Recommendations	KAPP Task Force	8/20/74
30. Model Documentation; Annual grain Price Policy Analyzer	Thodey/Abkin/Gibson/Ingvaldson	
31. Suggestions for an Expanded Program of Agricultural Situation and Outlook in Korea - KAPP Disc. Paper #8	David Culver	
32. PERT Analysis - Korean Crop Breeding Project - KASS Issue Paper #11	Martin Hanratty	
33.* Population and Food in Korea - Facts and Analyses	Sung Hoon Kim/Dong Mim Kim	
Arlie House		
1. Evaluation of the Korean Agricultural Sector Simulation Model		
1. Utilizing a System Model for Policy Analysis	Rossmiller	3/74

(Table 1 Cont.)

	PAPERS OR ARTICLES	AUTHOR	DATE
2.	Infrastructure to Support Systems Modeling as A Continuous & Transferable Process: The Computer Library for Agricultural Systems Simulation	Abkin	3/74
3.	General Systems Simulation Models for Sector Analysis	Johnson	3/74
4.	Basic Systems Theory & Concepts Underlying Construction of the Korean Simulation Model with Implications for Future Work	Manetsch	3/74
5.	The General Systems Analysis Approach for Agricultural Sector Analysis: Ability to Handle Various Contributing Techniques	de Haen	5/72
6.	A Review of the KASS Simulation Model	Jorgen Randers	3/14/74
7.	Evaluation Report - MSU Livestock Sector Models	Wilfred Candler	3/74
8.	The NAERI/MSU Agricultural Sector Simulation : An Evaluation	Alan M. Strout	
9.	Evaluation of the Demographic Component Korean Agricultural Sector Study	John E. Craig, Jr.	3/15/74
10.	The Recursive Linear Programming Resource Allocation Component of the Korean Agricultural Sector Study: A Review		
11.	Evaluation of the Grain Management Program Simulation Model	Richard Phillip/Paul L. Kelley	

Most of the time of the review team was devoted to counselling with users and potential users. The aim of this counselling was to obtain user views on the value of the work and on possible needs for improvement.

To consider usefulness from the point of view of the Economic Planning Board, the team met with Minister Nam, Duck Woo; Kang, Kyong Shik, Director of Economic Planning Bureau; Lee, Huyng Koo, Chief of Fast Investment Division; and others. The team also met with Kim, Man Je, President of the Korea Development Institute.

To ascertain MAF user needs, interviews were held with Minister Choi, Gak Kyn; Vice Minister Choo, Sung Kyn; Assistant Vice Minister Bae, Kyn Song; Lee, Huae Young, Director of Food Bureau; Lee, Byung Kee, Director of Farmland Bureau; Song, Chan Won, Chief of Livestock Division, Livestock Bureau; Kim, Sung Ho, Chief of Land Administration Division, Farmland Bureau; and others.

Among officials interviewed at other agencies were Kwan, Yong Shik, President of the Agricultural Development Corporation (ADC); Kim, Jong Bae, Chief of Agricultural Economics Section at ADC; and Kim, In Hwan, Director General of Office of Rural Development.

After formulating its major findings and recommendations, the team had a closing meeting with officials of the Korean government for an oral presentation of the results and exchange of views. The present report records the results of the review team's efforts in final form.

II. THE KOREAN AGRICULTURAL SECTOR MODEL

History and Status of the Korean Agricultural Sector Model (KASM)

The Korean Agricultural Sector Model (KASM) is a major analytical tool and integrating device of the KASS project. Work on KASM was initiated in Fall, 1971. The preliminary version of the model (KASM 1) was primarily an accounting model developed to facilitate timely completion of the sector analysis. Completion of the initial agricultural sector analysis project on schedule was aided by the concurrent development and use of KASM 1 providing guidance on data collection priorities and freeing analysts from the burden of hand calculations.

KASM 1 is diagrammed in Figure 1. The computerized parts of the model are shown on the boxed enclosed in solid lines. In addition to the commodity, sectoral, regional and national accounting mechanisms, analytical components were included on farm consumption, non-farm consumption and population and migration. The dotted boxes represent "model components" which were not computerized at that time.

Following completion of the sector study in 1972, the emphasis shifted to filling in the dotted lines of Figure 1 and moving towards the eventual system to be embodied in KASM 3 (Figure 2). Developments in KASM 2 accomplished to date and those remaining to be done include:

1. Internalization of consumer and producer prices in the demand-price-foreign trade component. This component solves a system of simultaneous equations for prices and consumption while maintaining a consumption expenditure constraint. Imports/exports are residuals.

KASM 1 SCHEMATIC

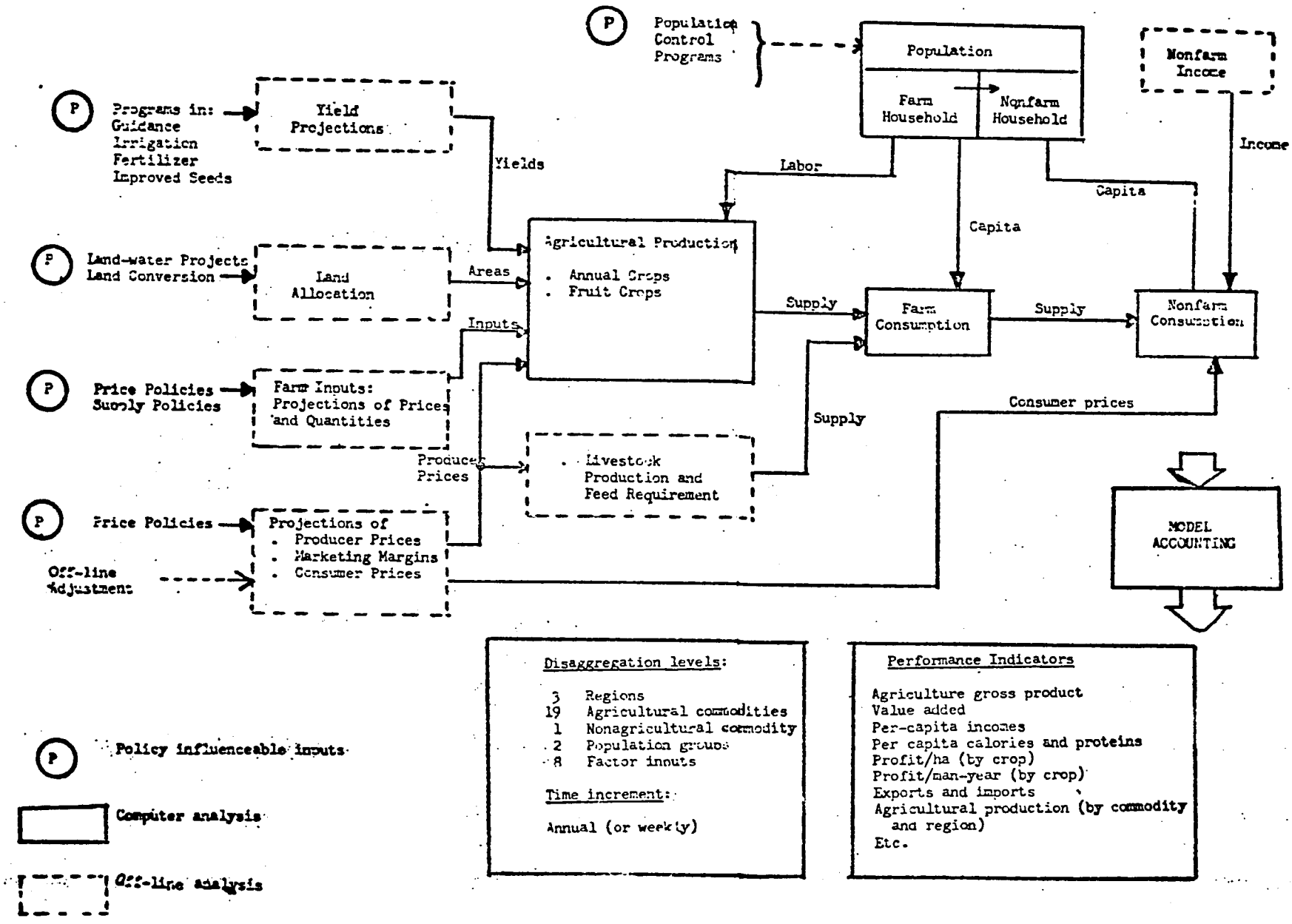

FIGURE 1

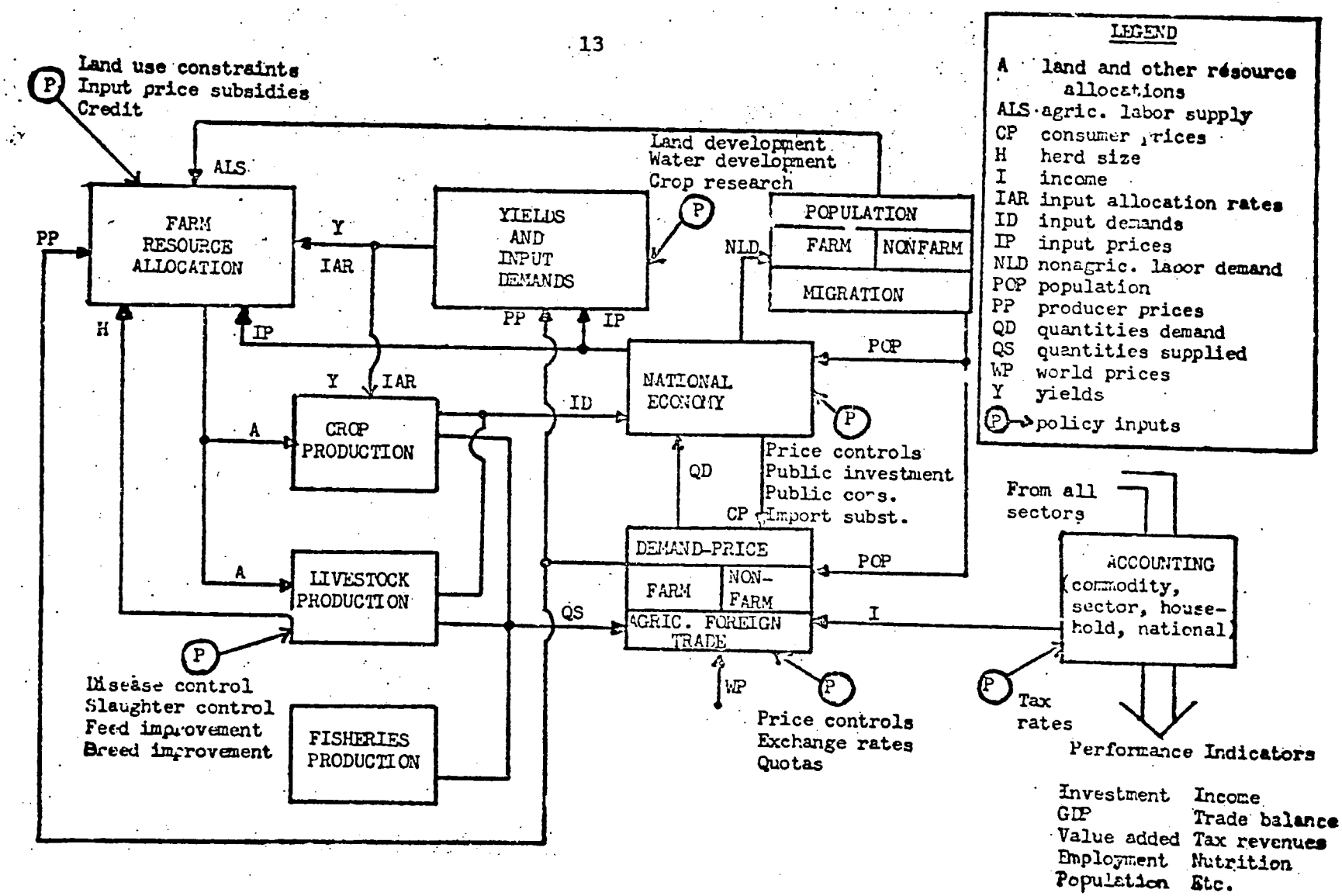

FIGURE 2

THE KOREAN AGRICULTURAL SECTOR MODEL

2. Internalization of land allocation decisions in the farm resource allocation component, which uses a recursive linear programming model to allocate land, labor and capital to crop and livestock production activities. (Dr. Lee, Jeung-Han, contract researcher at NAERI, participated in the design of this model and currently has responsibility for its continued development and use.)

3. Internalization of yields and input application rates using a production function model to project the consequences of public investment in land and water development and in crop improvement research and extension. This component has been developed and is currently running independently of KASM in a testing phase. There remains further testing, parameterization and linkage to KASM. (Dr. Lee, Jeung-Han developed this model for his Ph.D. dissertation research at MSU and is responsible for its continued development and use).

4. Internalization of linkages between the agricultural and non-agricultural sectors, including demands for and price indices of consumer goods and agricultural inputs and non-agricultural labor demands. This national economy model (NECON) is centered around a 16-sector input-output model of the Korean economy. (Hwang, Hong-Do, Senior Researcher at NAERI, participated in NECON's early development and will be responsible for its continued development and use.)

5. Development of a set of livestock production submodels apart from the livestock-related activities and constraints now embodied in the RLP model. (Ahn, Chang-Bok of NAERI will be responsible for research, modeling and policy analysis of this subsector.)

Accomplishments to Date Using the KASM Model

Major applications of KASM in planning and policy analysis have been as follows.

(a) In 1972, projections were made of consequences of four alternative sector development strategies for the main KASS report. Also in 1972, projections were made of consequences of alternative agricultural research strategies for the investment priority study. This study led ultimately to the Agricultural Research Loan (AID to ROKG).

(b) In 1973, projections were made with the KASM model for preliminary work on the Fourth Five Year Development Plan by MAF. The projections raised questions about consistency in the guidelines for the Plan handed down by EPB concerning population growth, growth rate in GNP, rural and urban incomes and grain self-sufficiency. A report was prepared for MAF, and the results were given in KASS Issue Paper 4 written by H. H. Suh, NAERI and B.S. Ryu, MAF.

(c) In 1975, projections were made with the model for use in the country position paper, Population and Food in Korea by S. H. Kim of Chonnam University and D. M. Kim of NAERI, prepared for the FAO/IAAE/UNFPA conference in Rome in December 1975.

The remaining applications to be noted all concern recent KASS involvement in Korea's Fourth Five-Year Plan.

(d) John Sloboda and Kim Dong-Min made projections for the Plan with the KASS population model of farm and non-farm populations consistent with EPB's projection of total population. The projections were also designed to be consistent with reasonable assumptions about age-sex specific death rates, migration rates and age-specific fertility rates. The results were presented by Kim Dong-Min at a meeting of MAF's high-level Policy Advisory Council. It was learned later that Kim Joo-Ho (then Planning Bureau Director) compared the KASS projections with official projections made by MAF's Statistics Bureau and with hand calculations he did himself. He concluded the KASS projections were the most reasonable and founded on good analysis, and decided to adopt them as MAF's official projections for the Fourth Five-Year Plan.

(e) The Livestock Bureau of MAF requested, through KAPP, that the KASS model be used to assist in work on livestock for the Fourth Five-Year Plan. A working team was set up consisting of Fred Mangum and Lee Nai-Soo of KAPP, Mike Abkin of KASS, Min Byung-Ryul of NAERI's Production Division, Song Chan-Won and Yoon Chul-Joon of MAF's Livestock Division.

The Livestock Bureau cooperated in defining the policy issues, evaluating the livestock data, defining the

policy runs to be made, and analyzing the results. The Livestock Bureau accepted the KASS consumption projections and used them in the plan with some modification. On the supply side, the dynamics of the model projected turning points and cycles or declines in the herd sizes, while, traditionally, planning projections are monotonically increasing. Although the Livestock Bureau did not accept the supply results for the Five-Year Plan, interest was expressed in using them at other times for policy analysis. Follow up is now underway.

(f) An inter-bureau team in MAF (including Jo Il-Ho, then of the Saemaul Division) making trade projections requested through KAPP that KASS use KASM for a trade analysis. A basic KASM projection of consumption, production and imports/exports was provided and was used by the trade projection team. Kim Dong-Min of NAERI, Mike Abkin of KASS, Fred Mangum of KAPP designed and presented the analysis.

(g) When the individual bureaus submitted their plans to the central MAF Planning Bureau for overall coordination of agricultural plans for the Fourth Five-Year Plan, the working committee charged with coordinating requested that the KASS model be used to make consumption projections of all commodities, particularly examining food grain self-sufficiency. Hwang Hong-Do, Senior

researcher in NAERI's Sector Analysis Division, was on that committee and worked with Mike Abkin in making and interpreting the projections. Food Bureau consumption projections were used as policy targets, and a series of KASM runs were made to examine the efficacy of alternative price policies in achieving those targets. The main objectives were to substitute expected surpluses of rice and barley for wheat (to reduce import requirements) and to increase farm income. The results, compared to the policy projections, have appeared in draft plan documents.

(h) David Culver and Richard Duvick of KAPP and Mike Abkin of KASS were asked by Director-General Hahm to review and comment on the final draft of MAF's plan for agriculture in the Fourth Five-Year Plan before its presentation to the Minister. Lee, Dong-Bai (chief of the Overall Planning Division) presented the whole plan, with the assistance of Hwang, Hong-Do of NAERI over a 3-day period. Conclusions and recommendations were written up and submitted to Mr. Hahm.

Members of the KASS and KAPP teams expressed the opinions that the above experiences in applying KASM have reaffirmed that model development, model use and institutionalization go hand in hand. In the process of using the model, model development progressed in the form of

improved data and structure and in the case of livestock, guidance for further modeling work. Institutionalization was also furthered in that Koreans at NAERI and in MAF became more familiar with the model, its structure and data requirements, and how to use and improve it; and, through the use of it, credibility in the model and the approach was enhanced.

Non-Model Accomplishments

A good deal of the MSU team work has not been directly tied to model output. Much of the analysis used the models but went beyond the model output in using a variety of information and data sources and in synthesizing such information. Examples of results at least partially attributable to such work include:

1. Major changes in the administrative structure of collecting and reporting agricultural statistics.
2. Negotiation of an AID loan for completion of 66 small scale irrigation projects.
3. Negotiation of the KAPP grant from AID to MAF
4. Contributed to decision to seek short season wheat variety.
5. General upgrading of stature, credibility, and professionalism of NAERI.
6. Increased appreciation by decision makers of usefulness of analytical input to the decision process.

Recommendations

The accomplishments to date demonstrate that the KASM model can be applied usefully. The software documentation needed for transfer of the

models to other personnel is provided for in the intensive period provided for this task during April, May and June of this year. The needs for personnel in Korea to carry on the use of KASM, after termination of the MSU KASS and KAPP projects, is dealt with in considering overall personnel needs elsewhere in this report.

Our recommendations for KASM are concerned with how to more fully enhance the degree of use of the KASM model, as a whole and in parts.

Recommendation 1

To broaden the application of KASM to policy and analysis questions, the capability, and the likelihood of use, of each individual submodels of KASM should be strengthened, through

(a) Assigning responsibility for each of the submodels to specific individuals in NAERI, each individual to be charged with having knowledge of the subject matter, operation, capacities and limitations of the submodel assigned to him, and additionally to be charged with seeking out and working with subject matter specialists inside and outside NAERI on policy and analysis questions for which the submodel is useful.

(b) For each of the submodels, identifying units and individuals with subject matter specialities within MAF, other ministries and elsewhere (e.g. KDI) to which the submodel can contribute.

(c) Providing for an instruction from high levels within the Korean Government that the individuals in NAERI responsible for submodels and the potential users outside NAERI be mandated to work cooperatively in the application of the submodels to policy and analysis questions.

Regarding the foregoing recommendation, Table 2 shows the major submodels which make up KASM and the user units in MAF to whose subject matter each submodel is applicable. This table indicates the type of

Table 2

Implementation of the
Korean Agricultural Sector Model (KASM):
Personnel and Users

Model and Submodel	Responsible Researcher/Analyst	User Agencies
Sector Model--in its entirety or combinations of submodels	Team of Kim Dong-Min, systems scientist and others responsible for submodels used	MAF Planning Bureau Livestock Bureau Farmland Bureau Production Bureau Food Bureau Office of Rural Development NAERI NACF EPB Economic Planning Bureau — 1st Investment Division KDI Blue House
Demand-Price-Foreign Trade Component	Hwang Hong-Do Kim Dong-Min	MAF Planning Bureau Food Bureau NAERI NACF AFDC
Livestock Production Submodels	Ahn Chang-Bok Min Byung-Ryul	MAF Planning Bureau Livestock Bureau Office of Rural Development NAERI NACF AFDC

Table 2 (Cont.)

Model Submodel	Responsible Researcher/Analyst	User Agencies
Resource Allocation Submodel	Lee Jeung-Han Kim Sang-Gee	MAF Production Bureau Farmland Bureau Office of Rural Development NAERI ADC
Yield/Input-Demand Submodel	Lee Jeung-Han Kim Yong-Shik	MAF Production Bureau Planning Bureau Office of Rural Development NAERI ADC
Population Submodel	Kim Dong-Min	MAF Planning Bureau Food Bureau NAERI EPB KDI KIFP Blue House
National Economy Submodel	Whang Hong-Do Park Sung-Joo Kim Yong-Shik	MAF Planning Bureau EPB KDI

linkages which should be considered in carrying out the foregoing recommendation. The table was prepared by Mr. Kim, Dong Min and Dr. Abkin in response to the recommendation.

There are additional needs to provide for communication and further refinement of KASM after KASS and KAPP phase out. These needs are expressed in the two following recommendations.

Recommendation 2

After the American counterparts of KASS/KAPP phase out from Korea, there is a need to hold regularly seminars and/or workshops on modeling activities between Korean Institutions and MSU or other U.S. institutions, and among Asians. These cross-communications must be aimed to augment the utilization capabilities of the models. There is also a need to establish formal channels to exchange research publications in this regard.

Recommendation 3

Under the umbrella of the sector macro-models, there is a need to research additional micro economic behavior at the farm, marketing system, and consumer levels. In order to make effective use of the kinds of models developed under the KASS program micro studies should be conducted to answer specific micro questions, and these should be linked to the fine-tuning process of the sector models.

The remaining recommendations for KASM concern specific opportunities to apply the model. The Livestock Bureau is interested in further development of the livestock sub-sector model and desires to cooperate with NAERI staff in this development.

Recommendation 4

The KASS/KAPP Review Team recommends that NAERI provide appropriate and sufficient staff to work with the Livestock Bureau staff in further refinements and extensions of the analysis of livestock development in Korea.

A request was made by EPB for runs of KASM to consider the effects of alternative agricultural investment programs. As the results are needed for closely timed decisions on Fourth Five-Year Plan targets, we assume the request is being met promptly and with full cooperation and communication.

Recommendation 5

The work on agricultural investment programs requested by EPB should be completed as soon as possible and in a manner conducive to further cooperation. The same recommendation applies to future requests of this kind widening the application of KASM and other analytical capabilities.

III. LAND AND WATER DEVELOPMENT

History and Status of KASS/KAPP Land and Water Activities

A member of the KAPP team, Richard Duvick, has subject matter responsibility in land and water, working closely with the Agricultural Development Corporation (ADC). While drawing on KASM results, this activity is sufficiently distinct and important to warrant separate consideration.

The role of resource development has been recognized in KASS reports from the outset. The earliest sector study (Rossmiller, G.E., et al., Korean Agricultural Sector Analysis and Environmental Development Strategies, 1971-1986, 1972) described the nature of the resource base and development programs. The early investment study (Ferris, John N., et al., Investment Priorities in the Korean Agricultural Sector, 1972) reported relatively high priorities for resource development -- of eight possible areas of activity, irrigation ranked third, drainage ranked fourth, and upland development last-- as well as initial studies in each of the above development area. Table 3 gives selected background statistics pertaining to land and water including levels of investment. Rather substantial development expenditures are noted since 1969, both in absolute amounts and as a proportion of total MAF expenditures.

Our interviews with Korean officials and staff revealed considerable appreciation for KASS/KAPP activity. Their comments are summarized at the beginning of the next section. In general, recent KAPF effort is most outstanding in their minds, although it is apparent that the use of

Table 3. Land and Water Development Activities, Expenditures and MAF's Total Project Expenditures.

Year	Activities			Total L & WD Expenditures (A)	Total MAF Investment & Loans (B)	A/B
	Irrigation	Consolidation	Slopeland Reclamation			
	..... 1,000 hectares			..... million won		
1965	20	18	37	4,958	18,023	0.275
1966	28	19	22	7,721	30,579	0.252
1967	15	23	17	8,741	36,769	0.236
1968	2	16	13	9,268	51,992	0.178
1969	202	14	8	24,266	80,744	0.301
1970	70	15	3	18,993	86,597	0.219
1971	14	27	1	19,542	113,799	0.172
1972	7	21	1	25,606	120,941	0.212
1973	11	22	1	34,853	129,827	0.268
1974	15	20	5	41,494	170,846	0.243

Source : 1) Yearbook of Land and Water Development Statistics, 1975; MAF & ADC
2) Investment and Loan Planning for Agriculture and Fisheries; 1975; MAF

KASM, or selected submodels, has future usefulness particularly to the policy agency, the Farmland Bureau under the Assistant Minister for Land and Agricultural Production. Demand, population, yields/inputs and farm resource allocation sub-models have potential for assessing physical resource requirements. Technical capability to provide future service must be assured if their potential is to be realized.

Our interviews with representatives of the Agricultural Development Corporation at Anyang revealed important dimensions of the KAPP program, including assistance in determining long-term goals, demonstration of policy analysis approaches, and in-house training of counterpart and collaborative economists. We found in the ADC expressions of interest in pursuing new methodologies for project feasibility studies and emerging interest in assessing rural development impacts in project areas, rather than solely pre-project economic feasibility aspects. If the Agricultural Development Department's Agri-Economics Section pursues this course of expanded analysis above current feasibility study efforts, it seems that additional staffing is required. The present staff numbers only 12 in total with 5 or 6 economists, 3 of whom have M.S. degrees. The units could also benefit from price analysis and farm management studies.

Accomplishments to Date

The following are representative comments focused on land and water relating to KASS/KAPP efforts and elicited from our interviews:

- The Planning Committee for the Increase of Food Production, formed in 1973 with representatives from various government agencies, utilized KASS demand projections for food grains in

designing the food self-sufficiency program as well as relevant policy directions for land and water development projects.

- KASS recommendation was also utilized to put more emphasis on increasing wheat productivity by the reclamation of slopeland.
- KAPP's poly-period L.P. model provided major guidelines for ADC to design long-term land and water development projects through the year of 2000. Utilizing the KAPP's model results, ADC was able to determine the internal priority ranking of irrigation, drainage, reclamation, and consolidation projects. ADC was also assisted by KAPP to submit budget proposals for various long-term projects under alternative investment programs.

Reports include the identification of the research procedure to be used to yield an ex post evaluation of 66 small and medium scale irrigation projects (Duvick, Richard D., et al., A Proposal for Economic Evaluation of 66 Small and Medium Scale Irrigation Projects in Korea, 1975). This could prove to be an important contribution in project analysis, for ex post evaluations are needed for projects in virtually all countries. A timely report using a poly-period programming model (Duvick, Richard D., et al., Estimating Future Capital and Labor Needs of ADC to Meet Korea's Demand for Rice, 1975) responded to the need for assessing development alternatives in a framework of capital expenditure minimization. Another study (Duvick, Richard D., Analysis of Long Term Impacts of Land and Water Self-Sufficiency of Food Grains, Korea, 1976 - 2000, 1975) linked poly-period

programming with selected KASM sub-sector models to assess impacts on grain self-sufficiency via land and water development alternatives under alternative levels of investment. The study, requested for the Fourth Five-Year Plan, clearly depicts outcomes of policy alternatives. Still another paper examined the possible policy of extensive slopeland development (Duvick, Richard D., Korea's Plan to Develop 300,000 Hectares of Slopeland, 1975). It suggests that rapid slopeland development might be ill-advised.

These reports were mentioned by several people interviewed during the review. They have obviously proven useful as inputs to relevant policy-makers and staff. In addition, less formal activities have been pursued, the sum of which leads us to strongly recommend the need for policy analytical capabilities in land and water resources after MSU leaves Korea at completion of the KASS/KAPP activity.

We have not here attempted to review the research output in more detail, being more concerned with utilization. However, we note imaginative use of KASS/KAPP data and quantitative approaches, observe that a U.S.-trained Korean -- J. H. Lee -- has two NAERI publications, and that a U.S. student -- M. Hanratty -- is involved in dissertation research examining alternative land use policies. Further economic and policy analysis should be encouraged.

Recommendations

The land and water development area is only one of many areas of application of KASM. The following three recommendations consider this area to illustrate more specifically possible uses of KASM in other areas.

Recommendation 6

We are particularly impressed with the usefulness of recent activity carried out under KAPP with respect to land and water development. The next year will reveal the permanency of that contribution to policy analysis. We feel that policy analysis capability in the area of land and water development, and surely other areas as well, is an important need to be developed after the KAPP phase-out.

Recommendation 7

While land and water development issues are not likely to require extensive use of the entire KASM development, policy analysis tools are likely to include submodel and other quantitative techniques, as needed. Our concern is that submodel capability be carried forward into the future.

Recommendation 8

The need may exist for additional professional analytical staff in ADC to assess individual project feasibility and rural development studies if the planned increased scope of this activity becomes a reality.

IV. GRAIN POLICY

History and Status of the Grain Management Program Model (GMP)

Early Development. Korean grain policies were recognized as important in the initial design of the KASS program. Development of the forerunners of the present GMP model began in 1972 as an integrated part of the overall Korean Agricultural Sector Model (KASM). Soon afterward, differences in purpose, time dimensions, capabiltiy together with dangers of over-complexity indicated that a Grain Management Program Model (GMP) should be developed as a separate and independent system from KASM. At the time of the formal evaluation of the KASS models in January, 1973, some components of the GMP model were fairly well developed while others were not. The present model is improved over the version reviewed in 1973 and reflects most of the suggestions of the evaluation team.

Annual Grain Price Policy Analyses. The Annual Grain Price Policy Analyses Model (AGPPA) projects the consequences of a set of Government purchase and release prices by applying various change parameters to a set of initial conditions and then account, for the consequences of the resulting changes. The central component of the model is a system of demand equations that project the per capita demand for the three most important food grains -- rice, barley and wheat -- separately for the farm and non-farm populations given the set of Government purchase and release prices that are pre-specified. The model is structured to project one period ahead from a base period, which is generally a best estimate of the current situation; this period can be of

any length, such as one season or one year, but it must be the same length as the base period (Thodey, Abkin, Gibson and Ingvaldson, Model Documentation: Annual Grain Price Policy Analyses, 1975). The model uses three specified policy variables to solve for three solution variables. As used in Korea, proposed price levels are specified and the model is used to predict the corresponding demand quantities. This information for alternative proposed price levels is used as information to support annual divisions on the support price levels for rice and for barley.

The model has been revised somewhat by the KASS consultant each of the four times since 1974 it has been used. The current version is fully operational, and documented in the report cited above. The model is operated as a self contained unit. The same model is used as the "front-end" component of the complete Korean Grain Management System Model (GMP).

It should be relatively easy for Korean analysts and policy makers to develop the needed experience for the annual Grain Price Policy Analyses. It is anticipated that additional modifications may be needed in the model to support future Government decisions on price support and consumer price levels. With the decision to retain a MSU systems scientist in Korea through December of 1977, consulting support will be available to aid in these tasks.

Complete GMP Model. The complete simulation model of the Korean Grain Management Program Model (GMP) is a dynamic simulation model with five major components, (1) farm subsector, (2) Government subsector, (3) private market subsector, (4) urban household subsector, and (5) price

and transaction linkage mechanism. These components are fully interphased and are not designed to operate separately as independent models. The total GMP model is completely independent of the Korean Agricultural Sector Model (KASM) and the components (Gibson, Kim and Thodey, Simulation Model of the Korean Grain Management System: Demonstration Results, 1976). The model determines solutions by periods of less than two days (1/20 of a year) sequentially over the specified planning period. It is believed by the developers to be reliable for total planning periods of perhaps three years.

At this writing (March 1976), the GMP model is developed and operational in the sense that complete demonstration runs have been made and the results printed and plotted. The model was partially documented in KASS Issue Paper 13 and previous KASS publications. Complete documentation is scheduled to be completed at Michigan State University within the next few months.

To the knowledge of the review team, no dynamic simulation model of the type and complexity of the GMP model is being used to support grain policies in other countries. The GMP is a first, and because it is, it deserves careful and complete review by the Korean Government for possible direct applicability and utilization prior to any decision on whether and how it will be installed to support Korean grain policies. The kinds of grain policy and management questions it is designed to address (buying and selling prices of government grain, release quantities and patterns, imports, storage stock levels and deployment) are important issues in Korea. The potential benefits appear to be large, but the costs of developing staff and supporting activities to utilize the model may be substantial also.

Accomplishments to Date

Utilization of the Annual Grain Price Policy Analyzer. The present verison of the annual grain price policy analyzer model and predecessor versions of this model have been used to predict the consequences of proposed specific given price policy decisions to assist government officials in finalizing these decisions. The first application was made for the last quarter of the 1974 rice year when rice stocks appeared insufficient to last until the 1975 rice year stocks became available. A task force consisting of planning officials from the Ministry of Agriculture and Forestry and the Economic Planning Board plus researchers from MAF and NAERI together with KASS/KAPP consultants worked together in formulating the specific questions for the model, obtaining the output of the model and interpreting the results. The findings were forwarded to policymakers who reportedly used them together with findings from independent analyses by the Korean Development Institute and from other research in formulating the price policy which was implemented at that time.

Under a similar task force organization analyses were made with the model to support (1) the rice purchase price decision for rice year 1975, (2) the barley purchase price decision in June 1975 and (3) the rice purchase price decision for rice year 1976. In each of these utilizations of the AGPPA model, the modifications in the model, the formulation of the input and the operation of the model to obtain the output were made by KASS/KAPP consultants.

Utilization of the Complete GMP Model. To date there has been no direct application of the complete GMP model to support grain management policy decisions in Korea. This fact reflects the present status of the model development. The GMP model has just now reached the final development and testing stage. The stage has not been reached so that the complete model could have been utilized.

Considerations Affecting Future Utilization to Support Grain Price Policies

Review by MAF. At the time of the KASS/KAPP review team interviews, the GMP model was under active review by the Ministry of Agriculture and Forestry to determine its potential for application to support grain policy decision making. Top Ministry officials have expressed interest in the model and its potential, and have stated their intention of participating personally in the review. The hope is to come to a decision regarding use of the model in time to reflect it in the final planning and budgeting for the Fourth Five-Year Plan. Such timing also will take advantage of any needed additional consultation with the KASS advisors before their forthcoming return to the United States.

Requirements and Potential Benefits of the GMP Model. Both the potential benefits and the probable costs to the Korean government of installing and utilizing the GMP model are relatively high. It is impossible to quantify the potential annual benefits precisely, but some indication is apparent from a test run made with the model for the period 1974 through 1976 (Gibson, Kim and Thodey, Simulation Model of the Korean Grain Management System: Demonstration Results, 1976). The trial solution

indicates average annual potential savings of some 80 billion won (about U.S. $160 million). The computed savings arise from (1) reduced storage, handling and marketing costs, (2) reduced costs of imported food grains and (3) increased revenue through delayed sales of government grain at increased prices. It is probable that the full computed savings indicated by the trial run would never be realized, because factors other than cost savings must be considered in decisions regarding grain price policies and grain management. A fair guess is that actual achievable benefits might be something like 25 percent of those indicated by the trial solution. Even this would be 20 million won (U.S. $40 million) per year.

The probable costs to the Korean government associated with such benefits could be estimated with relative accuracy, once a specific time-phased plan were worked out. The major costs would be in the development of highly qualified staff people (and/or the opportunity cost of transferring them from other assignments) which would be required to make effective use of a model of this complexity. The related costs for computer services, supporting micro analysis and generation of input data, while substantial, will be less than the cost of developing the required critical mass of human skills.

Need for Time-Phased Priorities. A time-phased plan of implementation should be developed along with accompanying PERT charts to insure maximum benefits and to avoid an extended development period before significant utilization is achieved.

It seems probable that a first step would be to install and begin to utilize the annual Grain Price Policy Analyzer. A next step might be to install a limited version of the GMP model which would be capable

of addressing the higher priority grain policy and issues. Through time the model could be expended toward its full capability, with application to a broader range of policy issues step by step as the capability is developed.

Location of the Model. Unlike many of the other models in the KASS system, the GMP model is designed to address short and intermediate term issues. It may require input data which are classified within the action agency. Alternatives may be analyzed which, after the results are seen, may be discarded.

Because of the short turn around and the need for day to day use by those making policy decisions, the question arises as to where the model should be located and who should operate it. One possibility is that hte model and its use to predict the consequences of alternative policy decisions and actions would be lodged within the appropriate action agency of MAF. Other possibilities include persons on detail from NAERI to the action agency or vice versa, or as yet another alternative to a permanent joint task force.

Analytical Staff Requirements. The requirements for qualified analytical staff people in order to make use of the GMP model will include

1. A senior agricultural economist with a number of years of experience in system analysis of grain problems. Such a person could be a part-time professional consultant employed by the MOF.
2. A full time grain management economist who is well trained (preferably a Ph.D.) in formal analysis with relatively complex models.

3. A well-qualified full-time systems scientist.

4. A competent and experienced computer programmer.

5. Qualified assistants for the above staff.

During the early stages of implementation, the required staff might be deployed on a part time or temporary basis. This is true particularly during the period when only the AGPPA model is being used. The full staff component can be developed as the capacity and utilization of the GMP model is increased through time.

Consulting Support. It seems clear that even with an effective staff development program, consultative support will be required, at least over the remaining period of KAPP specialists from Michigan State University in Korea. The system scientist now committed to the program will be essential. In addition, those directly responsible for development of the GMP model will need to be available on a short-term basis at the critical points in time when the model is being installed. Likewise, the consulting services of agricultural economists and others under the KAPP program will need to be made available to the Korean staff with the installation and utilization of the GMP model.

Grain Management Questions the Present GMP Model Does Not Address. The grain policy and grain management decision makers in Korea should understand that the GMP model is not designed to answer all questions for which they may desire computerized analytical support. In particular, it is not designed to solve for minimum shipping patterns, warehouse utilization patterns by specific location and related questions. There

apparently is interest in such models within MAF. Once the time-phased priorities are established, models which will do these things efficiently could be added to the analytical capacity within the action agency. They could be operated parallel to the GMP model, utilizing much of the same input data. Additional support from the KASS team may be needed if decisions are made to add models beyond that of the existing GMP model.

The foregoing discussion brings out the complexities involved in developing the GMP model and attaining successful use for policy purposes. It is beyond the limits of effort of the review team to make recommendations on the specifics of how implementation should proceed. The current MAF review is a needed beginning of serious consideration of the issues. At the same time, it is apparent that further sustained effort will be required. The review team recommendation is that active steps be taken to bring about the needed continued effort.

Recommendation

Recommendation 9

A group should be established with representation from NAERI and action agencies to meet regularly (at least monthly) to direct further model development, trial use and planning for permanent lodging of the GMP, including consideration of possible organizational changes that may be called foar. The group should not be disbanded unitl tasks are completed.

V. AGRICULTURAL STATISTICS AND OUTLOOK

While statistics and outlook are not a direct concern of KASS modelling, the data requirements and the various KASS analyses, particularly those of a shorter term nature, make the KASS/KAPP effort closely related to these areas. Inasmuch as there is a potential contribution of KASS/KAPP activities to statistics and outlook, the review team considered how to ensure a productive statistics and outlook environment within which these contributions can be made.

Background and Status of Agricultural Statistics Program

The Korean agricultural data system consists of the Bureau of Statistics, MAF; other bureaus and organizational units in MAF; and a number of other agencies, including NACF, Economic Planning Board, and Bank of Korea.

Much of the statistics collected by operating bureaus of MAF are of broad interest to other agencies and the nation in general. Often data collected by operating bureaus comes through administrative channels. At one time field statisticians of the Statistics Bureau came under operating bureaus of MAF.

Many significant improvements have been made in recent years in the data collection and processing system of the Bureau of Statistics. A complete new system of independent regional statistical offices were set up in 9 provinces and in each of 139 counties. These came under control of the Ministry of Agriculture and Fisheries and under the supervision of the Bureau of Statistics. New sample surveys have been

recently designed to improve data for crop area, yield and production; livestock numbers and production and some other basic agricultural statistics. The Bureau also has been recently reorganized (Figure 3).

Another development that may help to improve the government data collection system is the recent appointment of a new coordinator for overall government statistics. This statistical standards function is in the Bureau of Statistics, Economic Planning Board. Interviews with the new EPB Statistical Counsellor indicated he plans to move to a more effective coordination of Government data collection systems as well as inprove standards for data collection accuracy and relevancy of government statistics.

Background and Status of Agricultural Outlook

Initial planning and discussion of an outlook program began in 1962 in the Ministry of Agriculture and Fisheries. The program never fully materialized in MAF. Instead, the outlook program was transferred to the National Agricultural Cooperative Federation (NACF). NACF apparently felt an outlook program would help in the administration of NACF and assist local cooperative managers and coop members. The outlook program was transferred to NACF in 1965, and during 1965 and 1966 work was initiated on data collection and training of the outlook staff. The scope and methods of outlook work and statistical analysis work were given added impetus in 1967 and 1968 with the help of a U.S. consultant and with passage of the Fundamental Law for Agriculture, which obligated the Government to carry out an agricultural outlook program. Several staff

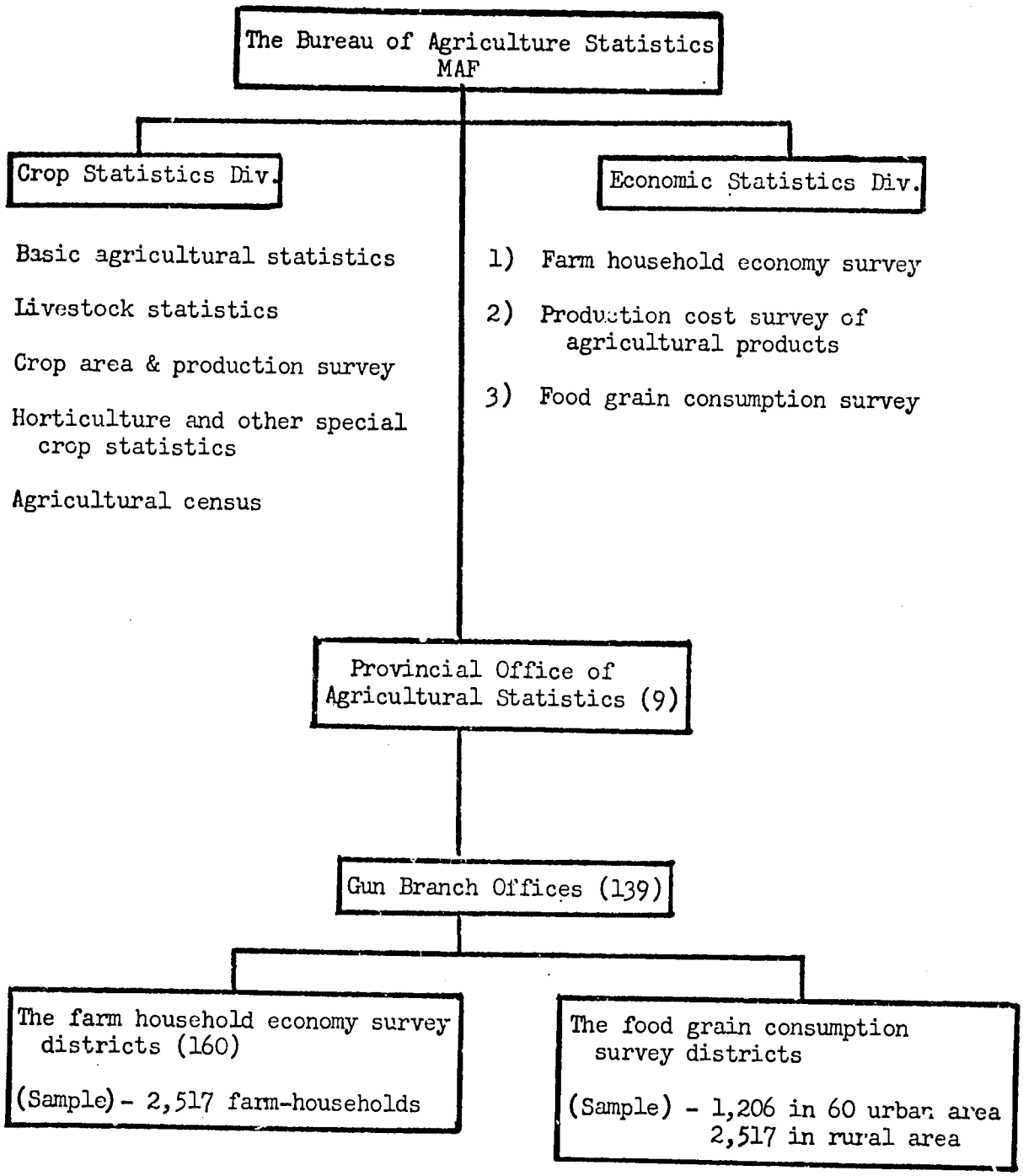

Figure 3. Organization Structure of the Statistics Bureau, MAF

members were sent to U.S. universities for training. The NACF outlook leadership has indicated its recognition of the broad scope fo an outlook program -- economic analysis and information for decision making. Considerable progress has been made in developing a staff and an economic situation and outlook capability in the NACF.

Recommendations

The MAF statistics program has rather broad coverage, and apparently sampling techniques on a sound basis. The review team feels that in the program consideration is needed of organizational relationship to other bureaus and of internal operating procedures. After a brief review, the team suggests the following issues as deserving of the attention of the leadership of MAF.

Recommendation 10

Timely and regular release of basic statistics on agriculture. In order to monitor developments and influence decision making in agriculture, relevant statistics must be timely and regularly available, at least to the minister and leadership of MAF. The team feels this area warrants attention of MAF leadership to consider possible institutional changes as well as staff, available computer facilities or bureau operations to facilitate timely regular rele se of basic agricultural statistics.

Recommendation 11

Accuracy, data coverage and coordination. Accuracy is of course most important; a very high degree of accuracy becomes very costly. Even though sample design is excellent, it is important to carefully examine the training and performance of enumerators and the systems of

field editing of surveys, and bureau methods of review and processing of data to assure greater accuracy.

Data coverage may be excessive in some areas while gaps in coverage may exist. This problem requires a close working relationship among the Statistics Bureau and the users as well as a frequent hard review of data coverage. For example, there is considerable detain on diseases of horses and dogs; yet data are quite inadequate on stocks and utilization data for major commodities and on coverage for fruits, vegetables and livestock.

Coordination among agencies on statistical standards and data coverage is needed to assure that data collected by different agencies can be related to and combined with other sources into overall data for the nation. The MAF rural economic household survey and the EPB urban household survey might be cited as examples where closer coordination would be worthwhile. Effective coordination and development of overall standards for statistics collection is needed for accuracy, data coverage and the timely release of information with cost efficiency.

The review team suggests the following observations as general guides to development of a combined Economic and Statistical Analysis Organization and Agricultural Outlook Service, regardless of the institutional setting for such a unit.

Recommendation 12

The primary function of a statistics and outlook unit is to provide the Minister and his top administrative staff with a steady flow of economic analysis, relevant statistics and other information for decision making:

(a) What is happening in the supply, use and price of major foods; in farming and income to farmers; in supply, use and prices of major farm inputs (fertilizer and chemicals, machinery and equipment,

credit, labor, etc.); and in foreign market developments affecting Korean agriculture.

(b) What are the major forces influencing changes in agriculture -- an explanation of major supply and demand forces as well as program operations affecting developments in agriculture.

(c) What is ahead in agriculture -- the outlook--, including expected developments based on available current statistics, economic and statistical analysis and forecasts of likely developments.

Recommendation 13

An economic analysis and information unit should relate to the MAF organizatlion in such a way that the unit has ready access to available statistics, program developments and plans especially of the Statistics Bureau, Food Bureau, Grain Marketing Bureau, Long-run Planning activities, National Agricultural Cooperative Federation, Office of Rural Development, including the Rural Guidance Service, and the Agricultural Development Corporation.

The analytical unit should have direct linkages to the leadership of MAF that facilitate a steady flow of economic analysis and information for decision making. Basic statistics and economic analyses and must be objective and timely in order to be helpful in policy development, program evaluation and other MAF decision making.

Recommendation 14

An economic and statistical analysis unit must have a staff well trained in economic theory and statistical analysis. The staff needs ready access to modern computer facilities; they must have the capacity and depth to carry out current analytical work as well as conduct research necessary to develop and maintain analytical tools ranging from the most simple techniques to complex commodity and agricultural sector models; the analytical tools should be capable of

contributing to day-to-day program operations of MAF, annual market developments, special analyses, and longer-run analyses useful in planning and resource allocation; and the staff should have or quickly acquire a first-hand knowledge of agriculture and how agriculture interfaces with the general economy and world economic developments.

Recommendation 15

General procedures and methods of initiating an outlook capability could include a number of steps.

(a) Initially the outlook analysis unit could bring together the analytical work in KASS-KASM and the Grains Management model, some of which can be adapted to appraisals of the shorter-run -- from 2 or 3 months up to 2 or 5 years. The demand analysis work, including elasticities (price, income, and cross commodity) for major commodities should be directly applicable to commodity outlook analysis and forecasts. The recursive linear programming model can provide insights, with carefully chosen restraints, into probable annual changes in production.

(b) The Grains Management model might be adapted to provide insights into likely shorter-run variations in the important grain markets.

(c) Work should be initiated to assemble the range of commodity data available on production (including area and yield); stocks; imports; on-farm use for food and feed; urban food and industrial uses; prices at farm, wholesale and retail levels; price supports as well as Government purchases, sales, stocks and other program operations influencing the production, use and price of major commodities. Related data need to be assembled on consumer income and its generation, on consumer market forces as well as relevant information on foreign markets and their impact on imports, exports, and prices of major farm products.

(d) With basic data available, simple commodity analyses can be developed and designed for forecasting, primarily for the marketing year and perhaps for 1 to 2 years into the future.

(e) As staff experience and analytical capability builds up, the analytical tools can be improved and made more realistic. Eventually, related commodity sectors can be combined into forecasting tools for the agricultural sector and its relationship with the general economy and world markets.

Recommendation 16

The flow of economic analyses and information for decision making initially may often be primarily for internal use within the Government. However, it will generally increase overall economic efficiency if relevant statistics, economic interpretations and prospective developments are made available to farmers, other business men and consumers as a guide in production planning and use in adjustment to changing market conditions. As publication becomes feasible, the reporting of relevant statistics and analyses might be in a monthly bulletin or in a number of short reports for major groups of commodities or on special analyses or longer-run appraisals directed to special interests of farmers and farm groups as well as other business men and consumers.

Recommendation 17

In view of questions of accuracy, detail of forecasts, and the nature of sensitive price forecasts and projections, neither the economic analyst nor analysts from any other discipline can foresee the future with a precise accuracy. Economic analysis can provide the decision maker with relevant statistics and interpretations of current developments, which are usually the major bases for decision making. Economic analysis can give the decision maker insights about important inter-relationships and major underlying forces at work from which plausible alternatives for the future can be examined. To expect highly accurate quantitative forecasts of the future is to expect the superhuman. One may insist that the economic analyst be specific about important forecasts, but there is a band of uncertainty about any appraisal of the future. Precise

forecasts of prices or precise projections for some future date may be less helpful to the decision maker than a correct evaluation of the foarces at work and perhaps qualitative evaluations of expected trends and developments.

A correct appraisal of the future(including price forecasts) based on current conditions and prospects may be made incorrect by action of the administrator or private decision makers designed to modify what might be considered undesirable developments. For example, a program administrator may release more or less grain to the market, modify support prices or subsidies, change the tax structure or take other actions to counter prospects of what he considers undesirable probable economic developments. Private decision makers also may change plans as a result of the forecast and thus help to create conditions that will make the forecast incorrect. At the same time, the forecast served the purpose for which it was made -- it provided appraisals to guide public and private decision making. Natural calamities -- poor growing conditions, floods, disease, and perhaps other "acts of God" -- may intercede in the course of events to make an economic analysis and forecast very wrong.

The review team feels that appreciation of the use and limitations of economic analyses, forecasts and longer-run projections will make for better decision making as well as for more effective use and reporting of statistical and economic analyses to support decision making in agriculture.

VI. INSTITUTIONALIZATION

Meaning of the Term

The term institutionalization expresses the key question in this review. It refers to the extent to which an analytical and planning capability has been created in MAF, and the expectation that this capability will continue, improve, expand and be utilized after the departure of the KASS/KAPP team. For an economic analysis capability to be effectively institutionalized, the following conditions appear to be essential:

A. Organization - a formal organizational structure that places the economic and policy analysis unit in an effective working relationship with policy makers and with sub sector and commodity bureaus in MAF.

B. Environment - recognition by policy makers of the role economic analysis can play in policy determination and credibility of the capacity of the unit to generate timely and relevant information.

C. Staff - sufficient number of adequately trained personnel to do the necessary tasks of model development, application, interpretation, and transfer of information to policy makers.

D. Support and Services - salaries and working conditions adequate to attract and retain qualified staff; access to computers, data and other supporting services.

A great part of the team's efforts was devoted to considering how to ensure that these conditions will be met. The findings and recommendations of the team on these matters are presented in this part of the report.

Organization and Environment

Organizational and environmental requirements are intertwined. A basic problem is posed by an organizational set-up that has tended to separate the analytical capability being developed at NAERI from the policy and decision makers in MAF that might have utilized it more fully. Another important set of linkages that appears to need strengthening is links by NAERI to basic data and other technical information available in the various bureaus of MAF.

To obtain improved linkages between the economic analysis capability (NAERI) and policy makers (MAF) and necessary technical information, a number of actions should be considered by MAF.

1. A program for orientation of senior MAF staff on the capabilities and limitations of the models and other analytical capability being developed with KASS/KAPP assistance. This would appear to be highly productive regardless of other actions that might be taken.

2. A more formalized set of linkages between NAERI and the various Bureaus and Offices of MAF that would assure access to technical and statistical information in MAF by NAERI and access useful analyses by MAF policy makers.

3. A reorganization of MAF that would transfer NAERI to MAF as a Bureau for Economics Analysis and Planning. Such a reorganization might

include this new bureau with the Statistics Bureau under an Assistant Vice Minister for Planning and Analysis or create a new Bureau of Economic Analysis and Planning within the existing structure of MAF.

The primary advantage of this arrangement is the improved linkages that would result. There would be a number of organizational complexities that would have to be addressed by MAF and other elements of the ROKG. In addition, the need to maintain the unit's longer-term research capability while at the same time responding to policy makers' short term requirements in a timely basis will require careful consideration by MAF.

It is considered essential by many in the Korean agricultural economics research community that the organizational integrity of an agricultural economics research institution be maintained. Having the necessary critical mass of scholars do effective research located in one institution will also help to assure a technical and institutional environment conducive to research.

The challenge is to maintain an environment conducive to effective and useful research unit, wherever located, competitive with private industry and the universitite so that trained and capable staff are retained in the unit over long enough periods for them to gain the necessary experience and for continuity in conducting effective and useful research.

The first recommendation to be made on organization and environment pertains to NAERI. NAERI is central in the institutionalization question, since the KASS work has been carried out there. The following considerations bearing on NAERI support the recommendation to be made.

BRIEF HISTORY OF NAERI

Although NAERI was established in its present form in 1973, the original body was founded in 1961 when MAF established it as the Farm Management Division and attached it to ORD in Suwon. It was expanded and renamed the Research Institute of Agricultural Economics, ORD in 1967. Then it transferred from ORD to MAF and moved to Seoul in 1970. It was further reorganized as NAERI by adding a new division, the Agricultural Sector Analysis Division which has had close collaboration with the MSU (KASS Team) under USAID.

There are now five divisions in NAERI: 1) Agricultural Development Division, 2) Rural Economic Division, 3) Agricultural Economic Division, 4) Agricultural Marketing Division, and 5) Agricultural Sector Analysis Division. The major change in the role of NAERI has been to shift the emphasis from micro-analysis to macro-analysis of the agricultural sector in order to provide more adequate information and analyses on current issues confronting the MAF policy making body.

IMPACT OF KOREAN AGRICULTURAL SECTOR SIMULATION STUDY

Since 1971 a joint venture with Michigan State University (MSU) and NAERI has carried out the KASS approach and agricultural policy analysis in Korea. The major ongoing projects are:

1. Grain management program model
2. Livestock development model
3. Recursive linear programming model for resource allocation at farm
4. Population and rural-urban migration model

5. Crop yield projection model
6. National economy model (input-output model)

The following suggestions may be helpful in securing use of these models. First, the timely supply of research results to the users or policy makers is important. One example of a problem in providing results is the grain manage model. This model was scheduled for completion near the end of 1974. However, it is still incomplete and certain portions need further revision and testing. Second, most of these tools are very sophisticated. Their level of complexity hampers the policy makers'understanding of the model itself and the results generated by the model. There needs to be a conscious effort to simplify the results of the models' output so that it can be easily understood by the final users or policy makers. Third, it is too early to evaluate the long term effects of the training program. Hopefully, the personnel trained through the project will be able to take over the responsibilities of modifying and developing the models.

IMPROVING NAERI'S ROLE

It is crucial to equip trained manpower for the successful institutionalization at NAERI after the KASS project terminates. NAERI seems to have two alternative ways to build up its professional teams. One is to recruit qualified personnel, and the other is to train existing staff members of NAERI. Already NAERI has dispatched nine trainees to MSU since 1974. The present status of its staff is as follows: 1 Ph.D., 6 M.A's, 4 one year trainees, and 34 research assistants. NAERI is expecting to have 3 Ph.D's in system science by 1977.

However, bottlenecks to obtaining or maintaining qualified professional personnel are threatened because of inflexibility of the salary scale and promotion system, which is not competitive with other institutions in Korea. The reorganization or promotion of NAERI is still in a preliminary stage. It should be pursued vigorously.

Recommendations

Recommendation 18

> Steps should be taken by MAF to strengthen the working relationships between NAERI and the bureaus and offices of MAF, particularly to facilitate "back and forth" communications and interactions at both the working staff level and with policy makers.
>
> Such steps could be formal - consistent with MAF operating procedures - or informal or both.

The next recommendation concerns KAPP. Inquiry into KAPP activities apart from their relationships to KASS is outside the scope of the team responsibilities as outlined in Section I. It is likewise not possible within the time allotted to the review to make highly specific recommendations with regard to administrative or organizational changes. One of the main findings of the team is that further pursuit of these matters is needed to ensure institutionalization and utilization of the KASS/KAPP analytical capacity as well as other analytical work in MAF.

Recommendation 19

> KAPP has as part of its charge the responsibility to recommend and help implement analytical procedures and organizational and administrative changes to facilitate the use of analytical input and to assist in organization and techniques for improvement of the data and information acquisition system. The team recognises both the importance of and the present constraints imposed by these issues in usccessful completion of the KASS and KAPP activities. Therefore, the team recommends that careful review and study of these issues be done by MAF, AID and MSU at an early date to establish the basis for identifying and relieving such constraints to the success of these projects.

Manpower and Support Services

The most important resource required to carry on KASS/KAPP activities is manpower. Sufficient numbers of professional persons are required, and they must have sufficient qualifications. While the prime requirement is for persons to carry out KASS/KAPP activities, prospects for future capability are brightened by the growing numbers of persons in Korea and in MAF with training in economics appreciative of the kinds of results KASS/KAPP activities can supply.

The contribution of foreign training to professional competence is difficult to measure for several reasons. Accurate figures on training completed are not readily available. Some idea can be obtained from records on AID supported training. The number of Korean students who had received support from AID graduate work in agricultural economics and related funds up to 1971 was 54. The number of additional

students supported through 1975 is 30. The comparable number supported by the Agricultural Development Council through 1971 was 17, with four additional through 1975. While these figures are incomplete, particularly in neglecting the Colombo Plan, they indicate that there has been a substantial increase in the number of professional persons in Korea with advanced foreign training in agricultural economics and related fields.

A significant portion of those returning to Korea have entered or returned to government or quasi government service. At least eleven persons returning to Korea after receiving M.S. or Ph.D. degrees with AID or the Colombo Plan since 1971 are now employed in MAF. For ORD the number is 19, and for NACF it is 8. For NAERI, the number is 5 at the M.S. level, with planned return of some persons completing the Ph.D. by 1977.

Regarding requirements within NAERI, discussions with the Director and with numerous other persons inside and outside MAF indicate that salary scales and status are a hindrance to attracting and holding the high caliber personnel necessary to sustain modelling and analysis after MSU participation terminates.

The specific job at hand is to maintain the staff required to manipulate and further develop the KASS models, carry out policy analysis and communicate the results. The present Korean personnel in NAERI who are concerned with KASS are shown in Table 4. The job consists largely in augmenting this complement.

Table 5 was prepared by Mr. Kim, Dong Min, Director of the KASS Division of NAERI. The first column of the table shows Korean personnel assigned at present to KASS by field and by level of formal training. The second column shows planned personnel which, if realized, would

Table 4. Research Personnel, KASS Division of NAERI

Fields	Present	Planned
System Science	None	Sung Hoo Park (Ph. D) Sang Won Lee (M.S.)
Agricultural Economics	Dong Min Kim (M.S.) Sang Gee Kim (M.S.) Hong Do Hwang (M.S.) Chang Bok Ahn (M.S.) Byung Ryul Min (M.S.) Yong Jin Kim (B.S.) Chong Bok Park (B.S.) Kyong Sook Park(B.S.) (Part time) Jeung Han Lee (Ph. D) Ho Tak Kim(Ph. D.)	Young Shik Kim (Ph. D.)
Technical Agriculture	Chong Bok Park (B.S.)	
Computer Programming	Bu Kwan Lee (B.S.) Yong Suk Kim (B.S.) Hyo Bok Lee	Bu Kwan Lee (M.S.)

Notes

1. ( ) is part time positions included in total.

2. *both have participated the development analysis program in MSU.

3. ** three of five have participated the development analysis program in MSU.

4. Additional inputs will be necessary from the fields of Technical Agriculture, Sociology and Public Administration through cooperative arrangements with ORD, MAF, Universities, etc.

Table 5. Status of Research Man Power, KASS Division of NAERI

Fields		Present	Planned	Ideal
System Science	Ph. D.		1 (1)	3 (1)
	M.S.		1	2
	B.S.			
	Sub-total		2 (1)	5 (1)
Agricultural Economics	Ph. D.	2 (2)*	3 (2)	5 (2)
	M.S.	5**	5	2
	B.S.	3	3	
	sub-total	10 (2)*	11 (2)	7 (2)
Technical Agriculture	Ph. D.			2 (2)
	M.S.			
	B.S.	1	1	1
	Sub-total	1	1	3 (2)
Computer Programming	M.S.			
	B.S.	3	2	1
	sub-total	3	3	3
Sub-total	Ph. D.	2 (2)	4 (3)	10 (5)
	M.S.	5	7	6
	B.S.	7	6	2
Total		14 (2)	17 (3)	18 (5)

largely replace the losses of American personnel. The third column, labelled Ideal, shows the somewhat greater numbers estimated to be needed to fully carry on the activities. The total increase from 14 to 17 (planned) and to 18 (ideally) should be viewed recognizing that the average years of experiences and training in analytical tools will decrease if there is one for one replacement.

Recommendations

An urgent need is to ensure that the targets shown in the second and third columns of Table 5 are actually reached. Beyond this, there is a need to provide for at least partial replacement of American KAPP personnel with Korean personnel. This is particularly important because of KAPP's role in helping bridge the gap between analytical capability and use of results in policy and programs decisions. We are unaware of any definite plans to replace American KAPP personnel with Korean personnel.

Recommendation 20

> A full scale review, with possible recommendations for improvement, should be made of the ability to maintain staff of sufficient ability to carry on modelling and analysis. The review should consider salary structures; hiring procedures; logistic support and other amenities affecting staff capability to perform modelling and analysis; and factors affecting professional esprit.
>
> Budget and support priorities should be provided for replacement of both KASS and KAPP activities, giving particular attention to needs for personnel to help apply KASS results to policy and analysis problems of concern to high level officials.

Similar planning is needed for support in the form of data; computer services; research, clerical and secretarial assistance; and office space and equipment. The team did not consider plans for these types of support in detail. We assume plans for support are being made.

Recommendation 21

Detailed plans should be prepared for future support needs in addition to manpower. These support plans should be compared with tasks required to carry out the KASS/KAPP activities, in order to note and correct any gaps.

VII. TRANSFERABILITY TO OTHER COUNTRIES

Agricultural sector analysis is rapidly becoming more widely practiced in LDC's and assistance agencies. Althouth it is a general concept whose meaning varies among analysts and agencies, sector analysis deals basically with the problems of strategy selection and priorities among alternative policies, programs and projects. As such, it can assist decision makers in LDC's and aid programs in confronting crucial problems of resource allocation and program selection.

There are several reasons for the growing interest in sector analysis. One is that the increasing emphasis on multiple goals for agricultural development, involving equity as well as production, makes the problem of choice among alternative policies, programs and projects much more complex and difficult. Relations between goals must be understood as well as the consequence of alternative choices on the various goals. This leads to a growing concern for a coherent approach to sector development so that multiple goals can be jointly attained or, when goals are competitive, a priority goal can be reached with minimum sacrifice of lesser goals.

The increasing number of trained people both in policy making and technical positions in LDC's is also leading to growing interest in the use of modern tools and quantitative approaches to assist in decision making. The widespread availability of computers has opened up exciting opportunities for the utilization of modern tools and techniques for planning and policy analysis in many LDC's.

The review team considered the transfer of the computerized system simulation approach used in Korea to other countries. We approached this question with full recognition of the importance of the unique conditons in each country which requires that any analytical approach be adapted to local conditions. Yet we believe that the search for low-cost, quick pay-off approaches is important enough to consider transfer possibilities in general terms even if application elsewhere of an approach would require a prior evaluation of needs and opportunities in the particular country.

A policy analysis and planning capability is an investment requiring scarce manpower and budgetary resources. Once such a capability is developed in one country, the question arises as to whether or not the results obtained can be applied elsewhere. The team concludes that such inter-country transfer of results, conclusions and polciy recommendations is not possible. There is no real alternative but to develop the analytical capability in each country. Transfer possibilities therefore are limited to conceptual approaches, software components, people and lessons of experience.

The team feels that opportunities for transfer of model components and software are possible but limited. Any transfer potential in these areas would almost certainly be tied to the transfer of people with a close familiarity with the model components and software being transferred. Even in those situations where people are transferred, country differences in institutional arrangements, agricultural enterprises and technologies, and available data may make it about as efficient to construct

new model components as to adapt existing model components to local conditions.

In thinking about the transfer of model components and software it is important to realize that their development involved many different choices (e.g. level of aggregation, economic behavior, feedback mechanisms) from among alternative choices. In the setting of another country, these choices may be quite different. If so, there would be little advantage in attempting to transfer model components vs. constructing them from scratch. Indeed, it may be just as efficient to begin anew. This leads us to conclude that the transfer of experienced personnel who can collaborate with workers in another country in developing new models and components is a more important possibility than the transfer of components and software.

Possibly the most promising transfer involves principles and lessons that can be derived from the Korean experience. Our review of KASS suggests that the following principles could be useful in guiding sector analysis projects elsewhere:

1. Start with small, relatively simple models directed to priority policy and investment problems.
2. Look for early utilization possibilities that will help to convince policy makers of the usefulness of analysis.
3. Develop models in close cooperation with subsector - commodity technicians to promote acceptability of the results.
4. Don't get model development too far out ahead of the capability and availability of local staff.

5. Emphasize training and transfer of responsibility from the beginning.

Some of these principles have guided the KASS effort from the beginning. Others represent conclusions based on our evaluation of the KASS experience using an advantage of hindsight. We believe that each of them can be usefully applied in the development of agricultural sector analysis capability in other countries. They are offered in the spirit of the goal of KASS -- the development of an effective capacity in other countries for agricultural planning and policy analysis.

93/0536 (18)
PD-AAF-401

5/30/73

9p

MEMORANDUM OF UNDERSTANDING BETWEEN

MICHIGAN STATE UNIVERSITY, CONTRACTOR--CONTRACT AID/csd-2975

THE SIMULATION PROJECT

AND

THE DEPARTMENT OF AGRICULTURAL ECONOMICS

UNIVERSITY OF IBADAN

This Memorandum of Understanding is entered into effective June 1, 1973 between the Simulation Project (Contract AID/csd-2975) with its principal offices at Michigan State University, East Lansing, Michigan, U.S.A., and the Department of Agricultural Economics, University of Ibadan, with its principal offices in Ibadan, Nigeria.

Whereas, Contract No. AID/csd-2975, a Contract between U.S.A.I.D. and Michigan State University encourages the conduct of joint cooperative studies and the training of developing country scholars and their U.S. colleagues in the use and actual development of simulation models, this agreement is within the scope and goals of the Contract.

Now therefore in furtherance of the purposes of such an understanding, Michigan State University, Contractor for Contract AID/csd-2975 and the Department of Agricultural Economics at the University of Ibadan mutually agree as follows:

I. SCOPE

Need for Study

In Michigan State University's Nigerian simulation work under Contract AID/csd-1557, relatively little interaction took place with Nigerian experts and policy makers. While this was acceptable under

the objectives of that contract, it resulted in a number of important deficiencies from the point of view of the model's relevance and applicability in Nigeria. In particular, the model's treatment of important certain labor problems, inflation and certain commodities was rudimentary.

The study here proposed would meet one of these deficiencies, namely, it would begin modeling Nigeria's kolanut industry, an important cash crop in Western Nigeria's agricultural economy and thus a competitor with cocoa for productive resources.

In terms of AID/csd-2975, this study meets our obligation to respond to requests for application of the generalized system simulation approach in LDC's. In addition, it would increase the relevance of the current Nigerian model while at the same time train Nigerian personnel in the use of the approach--thus increasing the opportunities for success of the long run implementation project anticipated for Nigeria.

II. OBJECTIVES OF THE STUDY

1. The analysis of the structure and problems of Nigeria's kolanut industry, including its place in the total agricultural and national economy. Such analysis will include detailed identification of problems, bottlenecks, constraints, specific performance variables needed in a model to evaluate alternative developmental decisions vis-a-vis the kolanut industry, and the various specific decision variables which should be included in an operational model useful in studying alternative development decision and their impact upon the various performance variables. Also

included will be a workable definition of the boundaries of the problem and a summary of key development questions faced in this problem setting (i.e., the kolanut industry and other specific related aspects of the Nigerian economy).

2. General specification of a simulation model for answering the questions identified in such specification to include: (a) lists of the various variables and constraints identified in (1); (b) specification of the levels of disaggregation appropriate (by region, activity--production, marketing, consumption, etc., and other descriptions as appropriate); (c) preliminary equations which interrelate the major endogenous and exogenous variables of the model; (d) specific definitions (with units of measure) of the model parameters requiring estimates and/or further data collection. It is understood that the kolanut industry model will be specified in such a manner as to be potentially integrable with the M.S.U. agricultural sector model for Nigeria.

3. Acquisition of data necessary to operationalize the model conceptualized in (2).

4. Insofar as time and manpower permit, implement and test the model on a computer. It is understood that if progress warrants and if funds are available, consideration will be given to the funding of a subsequent phase for bringing the model to the point of practical application to development problems related to the kolanut industry.

5. To provide Cyril Aja with experience, information and tools needed for development and application of system science simulation models.

III. PLAN OF OPERATION

Mr. Aja, under the direction, supervision and assistance of Dr. Samson O. Olayide and Dr. Francis S. Idachaba of the Department of Agricultural Economics and Extension, University of Ibadan will:

1. Prepare within the first nine weeks of this agreement a more specific and detailed plan of work and a timetable suitable to obtain the goals and objectives of this agreement using the plans below as a frame of reference.
2. Carry out the general simulation model specification outlined in Paragraph II. (1) and (2).
3. Assemble, with the assistance of field research assistants, necessary data to estimate the parameters of the model
   a. by collection of primary data directly from producers, middlemen, consumers, etc.;
   b. including secondary statistics from published sources;
   c. and now published technical, institutional and behavioral data and information from experts, other nonpublished sources, and published sources.
4. As time and manpower permit, incorporate the information into the model and carry out tests to validate the performance of the model. These should include tests for internal consistency,

clarity, and reasonableness in light of real world behavior. Model applications to industry problems are not required under the terms of this agreement. Such applications can reasonably be expected to require time and resources beyond those allocated in this agreement.

5. Insure that the model developed be so that it may be incorporated into the Nigerian Simulation Model.

IV. PROJECT PERSONNEL AND INPUTS

1. Mr. Cyril Aja reading for his Masters of Science degree, will be the principal of the above mentioned scope of work. He will be closely guided and, if necessary, assisted by Drs. Olayide and Idachaba who will be available for information and guidance in gathering the necessary information to develop this model. They will supervise and advise him in the preparation and publication of research. If his research does not qualify as an M.S. thesis at the University of Ibadan, they will be responsible for preparation of a report fulfilling the objectives of this contract.

2. Michigan State University will provide a qualified systems scientist and/or agricultural economist during the first, during the sixth to eighth month, and during the final two months of this agreement for a total period of no longer than nine weeks to inspect progress and if called upon, to advise and assist in finalizing the research done under this agreement.

V. REPORTS AND REVIEWS

1. Comprehensive quarterly reports will be submitted by Mr. Aja and reviewed and commented on by Drs. Olayide and Idachaba and sent

to the Project Director of the Simulation Project. These reports will be due 15 days after September 30, 1973, December 31, 1973, March 31, 1974 and June 30, 1974.

2. A review of the reports by the Project Director will determine whether the project should be continued at full support and extended with the prime contract.

VI. SUMMARY

Therefore, in consideration of the above, Contract AID/csd-2975 has expressed an interest in supporting this project to the extent of paying Mr. Cyril Aja's graduate student stipend, supporting him with three field assistants, furnishing travel/transportation expenses and other direct costs including computer costs for a period of ten months, and, possibly, another eight months, contingent upon the extension of the basic contract, Contract AID/csd-2975.

Mr. Aja will be directed and supervised by Dr. Samson Olayide, and Dr. Francis S. Idachaba, Department of Agricultural Economics, University of Ibadan. The results of his research would be published either as a thesis that would suffice to obtain his Masters of Science degree or as an independent report. One hundred copies of an independent report will be furnished to MSU under the terms of this agreement. The results will be made available to MSU, USAID/Lagos and AID/Washington for use as part of the public domain.

VII. PERSONNEL AND BUDGET

1. For the purpose of this memorandum of understanding the staffing plan and budget is within the budget limitations of the prime contract and will be supported by Michigan State University

Contract AID/csd-2975 under the provisions of the basic contract.

2. The firm budget is for period June 1, 1973 through March 31, 1974. The basic contract is firmly funded until March 31, 1974. As the projected budget in this agreement is contingent upon extension of the basic contract, MSU cannot be held responsible for funds in the projected period. Therefore, the projected budget will be contingent upon:

   a. the basic contract, Contract AID/csd-2975 being extended, and

   b. the Project Director's approval of the progress of the development of the model by Mr. Aja and his supervisors.

		Firm Budget (U.S. Dollars) Fm 6/1/73 To 3/31/74	Projected* Budget Fm 4/1/74 To 11/30/74	Total Budget Fm 6/1/73 To 11/30/74
Salaries				
Cyril Aja, Grad. Student $144 per month	$1,444	$4,332	$2,016	$6,348
3 Field Assistants @ $96 per month	2,888			
Travel				
Student, Field Assistants and Supervisors $100 per month		1,000	700	1,700
Equipment				
3 bicycles @ $100 each	300	700	—	700
1 Mobylette/Honda	400			
Other Direct Costs				
Computer	500	845	555	1,400
Typing, Stencils, Supplies	345			
		$6,877	$3,271	$10,148

*The availability of these funds are contingent upon the extension of Contract AID/csd-2975 and the Project Director's approval of the progress of work.

Now therefore, the Department of Agricultural Economics, University of Ibadan agrees to perform such services as specified in this agreement and Michigan State University hereby agrees to reimburse the University of Ibadan for the expenses incurred in Mr. Cyril Aja's graduate work in accordance with the following terms:

1. All services to be rendered under this agreement shall commence not later than June 1, 1973 and will continue until at least March 31, 1974. The extension until November 30, 1974 is contingent upon extension of Contract AID/csd-2975 and satisfactory performance through March 31, 1974.
2. All raw data collected will be at MSU's disposal as will summaries of such data and manuscripts and/or a thesis produced therefrom.
3. The University of Ibadan will submit itemized statements in reimbursement for expenses, the total of which shall not exceed $6,877 during the first ten months of the agreement.
4. Reimbursement will be made in accordance with the budget schedule and line items. Reimbursement requests should be sent to the Director, Research and Contract Division, Michigan State University, East Lansing, Michigan 48823 as often as deemed necessary but not more than once a month.
5. The Department of Agricultural Economics, University of Ibadan, agrees to the relevant provisions of Contract AID/csd-2975, copies of which are attached.

IN WITNESS WHEREOF the parties hereto have caused this Agreement to be executed as of this day and year above written

Samson O. Olayide
Department of Agr. Economics

H. Oritsejolomi Thomas
Vice-Chancellor
University of Ibadan

Michigan State University

930536 (19)
PD-AAF-401

EXHIBIT I

9p

SCOPE OF WORK

ADAPTING AND TESTING OF AGRICULTURAL SIMULATION MODEL TO SECTOR ANALYSIS

I. General Statement of Work

The basic objective of this project is to test, apply, and further develop, under field conditions, the simulation model (and components) developed under Contract AID/csd-1557 with the end in view of increasing the usefulness and lowering the cost of policy, program and project development and evaluation.

II. Specific Statement of Work

A. Test, adapt, extend and use the computer simulation model developed under AID csd-1557 in the context of Nigeria or other country in designing, developing, and evaluating selected policies, programs and projects. This will be done with host country, third country and international agencies as opportunities and needs arise and as mutually agreed to by TAD/AID/W and the Contractor. In accomplishing this objective, emphasis will be placed on first establishing linkages with indigenous institutions and second on establishing their capacity to use computerized simulation models to design, analyze, and evaluate their own policies, programs and projects. Some preliminary discussions have been held with Bureau and Mission personnel on operationalizing the total model in Nigeria, Korea and Indonesia. There are numerous country locations where not more than two components of the simu-

lation model could be applied such as the tree crop component (West Africa, Indonesia, Thailand), livestock component (Columbia, Brazil, Philippines), annual crop component on rice or wheat (Philippines, Pakistan, Korea).

B. Test, adapt, extend and use the computer simulation model developed under AID/csd-1557 in designing, developing, analyzing and studying, and/or in evaluation selected programs and projects for AID/W and/or USAID Missions in countries mutually selected by AID/W and the Contractor. Here again strong emphasis will be placed on developing institutional linkages between U. S. agencies and U. S. universities to increase capacity to design, analyze and evaluate policies, programs and projects. The possible country situations are numerous, but consideration might be given to Thailand, Brazil, Columbia and East Africa.

C. Establish a software library, initially at MSU, but perhaps to be transferred later to the proposed IDI of A.I.D. The various mathematical models and computational routines referred to here as "software" should be placed in one or more of the standard computer languages indexed and made available to "borrowers" with appropriate explanations. This will involve generalization of existing components and the provision of a higher order simulation language for the integration and combination of components into configurations required in various institutional and geographic contexts. Such an arrangement is needed to make the model components available on a national and international basis to potential users in donor, lender and host country agencies.

D. Further develop the computer simulation model on the basis of experience in using it under field conditions. A number of extensions and modifications may be needed. These may include the incorporation of PERT (critical path analysis), the incorporation of further development in the theory of investment and disinvestment as related to supply responses and the solution of certain aggregation problems, the incorporation of PPBS (Planning, Programming, and Budgeting Systems) and PERT techniques, and the use of various decision rules in estimating entrepreneurial and consumer behavior.

E. Train personnel from host country, donor, and lender agencies in the use, adaptation and further development of computer simulation models. Initially this will be done concomittantly with and as part of attaining objectives (A), (B) and (C) and as part of the Contractor's regular educational program. This training activity will be important in establishing the international and national linkages and capacities to use computer simulations in designing, analyzing and evaluating developmental policies, programs, and projects. Special training programs at either off-campus or on-campus locations are envisioned. This project (1) holds real promise in enhancing the state of the art in sector planning and (2) is one important component of a program that meets the high priority assigned to sector planning. The need is to move in-depth in the evaluation of policy program and project alternatives. The critical need is to expand micro type analyses, to aggregate the micro possibilities, to focus on interdependencies between micro and macro elements and to structure, the transferability of such an approach.

This project relates directly to the key problem areas of sector analysis and agricultural economics capability, rural/urban transfer systems and a worldwide agricultural research network. It was constructed on "the building block" principle. Thus, it has components for annual cash crops, annual food crops, perennial export tree crops, and livestock. Further, it deals with agricultural research, extension and education, transportation, interregional domestic trade, export earnings, population, domestic consumption, taxation, foreign trade and provides for transactions between the farm and, in a rudimentary way, the non-farm sector. In turn, each of these components is constructed of sub-components. For example, essentially the same demographic sub-component is used for modeling the people, cattle, palm tree, cocoa tree and rubber tree populations. It is this building block characteristic of the MSU agricultural sector model which makes it and its components flexible and adaptable to a wide variety of circumstances, i.e. in different countries and at policy, program and project levels.

III. Work Plan

A. First Year

1. A country will be selected by mutual agreement of TAB/AID/W, the country mission and/or host country administrators and the Contractor. For this country the AID/csd-1557 model will be used in starting an agricultural sector study for completion in the second year. This study could be done for the benefit of either the host country and/or USAID Mission in the country. Heavy emphasis will be placed, as feasible, on forging institutional relationships with agencies in host countries.

2. The Contractor will be responsive within the present rather stringent financial and personnel constraints of this contract, to USAID, A.I.D., host country and international donor or lender agency requests for assistance in program and project development evaluation.

3. Work will be started on the software library. The timing and extent of this work will be conditioned by when work is started on 1. and 2. Aside from the effect of such work on availability of project personnel and money to devote to the software library, work on 1. and 2. will help indicate how the library should be organized.

B. Second Year

1. Either a host country of USAID Mission agricultural sector study will be completed.

2. One program or project study should be completed.

3. Additional sector policy, program and project studies will be initiated.

4. The software library will be approaching operational readiness.

C. Third Year

1. The Contractor will, hopefully, have developed a host country or agency capacity to use, apply and further develop computer simulation models as it phases out of one or more studies.

2. The Contractor will be increasingly responsive to requests from host countries, USAID Missions, AID/W and international donor and lender agencies for research assistance and training programs. If these responses are of sufficient volume, the question will have to be raised as to whether the Contractor's function should be continued, transferred to IDI or dispersed via training programs to potential users domestically and abroad.

5. The software library should be operating and continuing to develop and the questions should be answered concerning its more ultimate nature, organization and location.

IV. Research Methodology

The methodology to be employed under this contract is fundamentally the same as the methodology employed under AID/csd-1557. However, it will be extended to carry out the subsequent steps as described below. That methodology employs the "building block" approach to constructing simulation models. In the "building block" approach, components of a computer simulation model are built and tested, one component at a time. These components are then assembled into larger sub-sectoral components which are also tested. These, in turn, are combined into a sectorial model for, say, all of agriculture in a country such as Nigeria or Korea.

In this contract the sub-components, components and sectoral models will be applied to particular geographic locations and to policy, program and project problems. As such applications reveal deficiencies in the components, sub-sectoral models the process employed in AID/csd-1557 will have to be repeated in order to improve on the components. As this is done, the methodology used in AID/csd-1557 will be extended to include discussions and interactions with relevant decision makers in order to establish the three necessary preconditions discussed above. The methodology, in this connection, will be normative as well as positive or non-normative. The criteria for verification of the sectoral model, or its components will include (1) logical,

internal consistency of the model, (2) consistency of the model with other formulations based on independent information, as reflected in ability to "predict and to track reality," (3) the clarity of the model and the capacity of other people interested to understand it or use its results and (4) the workability of the model when used to solve real-world policy, program, and project problems and when subjected to sensitivity tests. The use of sensitivity tests will relate the workability of the model and its components to inaccuracies and deficiencies in data. These tests will be useful both in interpreting results and in formulating recommendations as to procurement and processing of primary data.

As the preconditions for maximization are met, additional maximizing components will be incorporated in the model. An example of such an incorporation is found in AID/csd-1557 where a recursive, quadratic programming component is used in maximizing gains from reallocating production and consumption of beef among regions of a country in response to transportation investments.

Computer experiments will be used from time to time to gain a better understanding of the workability of various proposed policy, program, and project alternatives. Replication of these should prove useful in estimating the effects on performance of probability distributions of weather, price and other variables.

V. Institution Building

In each country of application it is planned (1) that the host country shall make financial and human resource commitments to the project, (2) that the host country shall build and extend its capacity to apply and extend the planning methodology and (3) that there shall be close interaction with host country professionals. Further it is anticipated that researchers from countries other than those of application will be added to the research teams to extend the institution building dimension of the project.

VI. Utilization

A. Three kinds of reports are anticipated. Most significantly will be those reports dealing with the adaptation of the methodology to policy, program and project choices within the host countries. A second type of report will be concerned with extending the methodologies in semi-technical language to policy and developmental administrators. The final form of reports relate to the professional community throughout the world.

B. With the close interaction with host country professionals and with the research results being closely followed by agricultural economists and other researchers in external development agencies, extensive utilization is anticipated. Also the provision for developing a software library should provide for transferability to agencies concerned with development planning.

Contractor shall provide the following reports:

1. One hundred copies of an annual report for the year ending June 30 of each year. Such reports to be submitted to AID/W by September 30. This report will include a one page summary of significant results to date and their utilization and will be the initial page of the body of the report.

2. Ten copies of a semi-annual fiscal report. The first such report will be due December 31 and will show actual expenditures through September 30 and an estimate of expenditures through December 31. The second report will show actual expenditures through March 31 and an estimate of expenditures through June 30.

3. Ten copies of a brief semi-annual administrative report for the six-month period ending December 31 and June 30 of each year. The reports will be due January 30 and July 30 of each year.

4. Reports referred to in Part VI may be submitted separately in 100 copies and referred to in other reports mentioned above.