5250207 (2)
PD-AAF-094-81

AGENCY FOR INTERNATIONAL DEVELOPMENT

PROJECT PAPER FACESHEET

1. TRANSACTION CODE: A (A = ADD, C = CHANGE, D = DELETE)

PP 162p

2. DOCUMENT CODE: 3

3. COUNTRY/ENTITY: PANAMA

4. DOCUMENT REVISION NUMBER:

5. PROJECT NUMBER (7 digits): 525-0207

6. BUREAU/OFFICE: A. SYMBOL: LA; B. CODE: 05

7. PROJECT TITLE (Maximum 40 characters): ALTERNATIVE ENERGY SOURCES

8. ESTIMATED FY OF PROJECT COMPLETION: FY 81

9. ESTIMATED DATE OF OBLIGATION: A. INITIAL FY 79; B. QUARTER 3 (Enter 1, 2, 3, or 4); C. FINAL FY 79

10. ESTIMATED COSTS $000 OR EQUIVALENT $1 –)

A. FUNDING SOURCE	FIRST FY B. FX	FIRST FY C. L/C	FIRST FY D. TOTAL	LIFE OF PROJECT E. FX	LIFE OF PROJECT F. L/C	LIFE OF PROJECT G. TOTAL
AID APPROPRIATED TOTAL	825		825	825		825
(GRANT)	(825)	( )	(825)	(825)	( )	(825)
(LOAN)	( )	( )	( )	( )	( )	( )
OTHER U.S. 1.						
OTHER U.S. 2.						
HOST COUNTRY		550	550		550	550
OTHER DONOR(S)						
TOTALS			1375			1375

11. PROPOSED BUDGET APPROPRIATED FUNDS $000)

A. APPROPRIATION	B. PRIMARY PURPOSE CODE	PRIMARY TECH. CODE C. GRANT	PRIMARY TECH. CODE D. LOAN	E. 1ST FY 79 F. GRANT	E. 1ST FY 79 G. LOAN	H. 2ND FY 80 I. GRANT	H. 2ND FY 80 J. LOAN	K. 3RD FY 81 L. GRANT	K. 3RD FY 81 M. LOAN
(1) ST	740B	878		825					
(2)									
(3)									
(4)									
TOTALS				825					

A. APPROPRIATION	N. 4TH FY ___ O. GRANT	N. 4TH FY ___ P. LOAN	Q. 5TH FY ___ R. GRANT	Q. 5TH FY ___ S. LOAN	LIFE OF PROJECT T. GRANT	LIFE OF PROJECT U. LOAN
(1) ST					825	
(2)						
(3)						
(4)						
TOTALS					825	

12. IN-DEPTH EVALUATION SCHEDULED: MM 06 YY 81

13. DATA CHANGE INDICATOR. WERE CHANGES MADE IN THE PID FACESHEET DATA, BLOCKS 12, 13, 14, OR 15 OR IN PRP FACESHEET DATA, BLOCK 12? IF YES, ATTACH CHANGED PID FACESHEET.

2 (1 = NO, 2 = YES)

14. ORIGINATING OFFICE CLEARANCE

SIGNATURE:

TITLE: Warren Lane, Acting Director

DATE SIGNED: MM 05 DD 25 YY 79

15. DATE DOCUMENT RECEIVED IN AID/W, OR FOR AID/W DOCUMENTS, DATE OF DISTRIBUTION: MM DD YY

AID 1330-4 (3-76)

AGENCY FOR INTERNATIONAL DEVELOPMENT

PROJECT IDENTIFICATION DOCUMENT FACESHEET

TO BE COMPLETED BY ORIGINATING OFFICE

1. TRANSACTION CODE: C (A = ADD, C = CHANGE, D = DELETE)

PID

2. DOCUMENT CODE: 1

3. COUNTRY/ENTITY: PANAMA

4. DOCUMENT REVISION NUMBER:

5. PROJECT NUMBER (7 DIGITS): 525-0207

6. BUREAU/OFFICE: A. SYMBOL: LA; B. CODE: 05

7. PROJECT TITLE (MAXIMUM 40 CHARACTERS): ALTERNATIVE ENERGY SOURCES

8. PROPOSED NEXT DOCUMENT: A. 3 (2 = PRP, 3 = PP); B. DATE MM YY: 04 79

9. ESTIMATED FY OF AUTHORIZATION/OBLIGATION: a. INITIAL FY 79; b. FINAL FY 79

10. ESTIMATED COSTS ($000 OR EQUIVALENT, $1 =)

FUNDING SOURCE	LIFE OF PROJECT
A. AID APPROPRIATED	825
B. OTHER U.S. 1.	
B. OTHER U.S. 2.	
C. HOST COUNTRY	550
D. OTHER DONOR(S)	
TOTAL	1,375

11. PROPOSED BUDGET AID APPROPRIATED FUNDS ($000)

A. APPROPRIATION	B. PRIMARY PURPOSE CODE	PRIMARY TECH. CODE C. GRANT	PRIMARY TECH. CODE D. LOAN	E. FIRST FY 79 F. GRANT	E. FIRST FY 79 G. LOAN	LIFE OF PROJECT H. GRANT	LIFE OF PROJECT I. LOAN
(1) ST	740B	878		825		825	
(2)							
(3)							
(4)							
			TOTAL	825		825	

12. SECONDARY TECHNICAL CODES (maximum six codes of three positions each)

875 | 062 | 245 | 252

13. SPECIAL CONCERNS CODES (MAXIMUM SIX CODES OF FOUR POSITIONS EACH): COOP | TECH | BR

14. SECONDARY PURPOSE CODE: 742

15. PROJECT GOAL (MAXIMUM 240 CHARACTERS)

Improve standard of living for low income rural and urban families and further the country's economic development.

16. PROJECT PURPOSE (MAXIMUM 480 CHARACTERS)

Improve capability of the Water Resources and Electrification Institute to identify, analyze and develop renewable and alternative energy sources and applications.

17. PLANNING RESOURCE REQUIREMENTS (staff/funds)

18. ORIGINATING OFFICE CLEARANCE

Signature:

Title: Warren E. Lane, Acting Director

Date Signed: MM DD YY 05 25 79

19. DATE DOCUMENT RECEIVED IN AID/W, OR FOR AID/W DOCUMENTS, DATE OF DISTRIBUTION: MM DD YY

AID 1330-2 (3-76)

525-0207

Certified to be a true copy of the original signed by Architect Edwin Fábrega, General Director of the Hydraulic Resources and Electrification Institute, Lic. Abdiel F. Julio, Viceminister of Planning and Economic Policy and Mr. Aldelmo Ruiz, USAID Director.

Robert E. Jordan
Certifying Officer
USAID/Panama

ENMIENDA No. 1	AMENDMENT No. 1
CONVENIO DE DONACION	PROJECT
PARA PROYECTO	GRANT AGREEMENT
entre la	between the
REPUBLICA DE PANAMA	REPUBLIC OF PANAMA
y los	and the
ESTADOS UNIDOS DE AMERICA	UNITED STATES OF AMERICA
para	for
FUENTES ALTERNAS DE ENERGIA	ALTERNATIVE ENERGY SOURCES

AGENCY FOR INTERNATIONAL DEVELOPMENT

AGENCIA PARA EL DESARROLLO INTERNACIONAL

PROYECTO No. 525-0207	PROJECT No. 525-0207
18 de agosto de 1980	August 18, 1980

CONFORMED COPY

PROJECT GRANT AGREEMENT AMENDMENT No. 1

El Convenio de Donación entre la República de Panamá (Donatario) y los Estados Unidos de América, representado por la Agencia para el Desarrollo Internacional (AID) con fecha 29 de agosto de 1979 para Fuentes Alternas de Energía por este medio se enmienda como sigue:

Se suprime la Sección 2.2 (a) en su totalidad y se sustituye como sigue:

Sección 2.2 Naturaleza Creciente del Proyecto

(a) La contribución de la AID para el Proyecto es proporcionada en forma de incrementos, los cuales se proveen de acuerdo a la Sección 3.1 de este Convenio. Los incrementos subsiguientes estarán sujetos a la disponibilidad de fondos de la AID para este propósito, y el acuerdo mutuo de las Partes, en el momento de un incremento subsiguiente, para proseguir con el Proyecto.

Se suprime la Sección 3.1 en su totalidad y se sustituye como sigue:

Sección 3.1 La Donación

Para asistir al Donatario a financiar los costos para la realización del proyecto, la AID, de conformidad con el Acta de de Ayuda Exterior de 1961 y sus enmiendas, ha otorgado a la República de Panamá de acuerdo a los términos del Convenio de Donación para Fuentes Alternas de Energía, con fecha 29 de agosto de 1979, la suma de quinientos mil dólares de los Estados Unidos de América, ($500,000) y por este medio conviene en otorgar a la República de Panamá, bajo el Convenio de Donación de Fuentes Alternas de Energía del 29 de agosto de 1979, a través de la Enmienda No. 1 una cantidad adicional que no

ENMIENDA No. 1 AL CONVENIO DE DONACION

The Project Grant Agreement between the Republic of Panama (Grantee) and the United States of America, acting through the Agency for International Development (AID), dated August 29, 1979, for Alternative Energy Sources is hereby amended as follows:

Section 2.2 (a) is deleted in its entirety and the following language is substituted therefore:

Section 2.2 Incremental Nature of the Project

(a) AID's contribution to the project is provided in increments which are made available in accordance with Section 3.1 of this agreement. Subsequent increments will be subject to the availability of funds to AID for this purpose, and to the mutual agreement of the parties, at the time of a subsequent increment to proceed.

Section 3.1 is deleted in its entirety and the following is substituted therefore:

Section 3.1 The Grant

To assist the Grantee to meet the cost of carrying out the project, AID, pursuant to the Foreign Assistance Act of 1961, as amended, has granted to the Republic of Panama under the terms of the Project Grant Agreement for Alternative Energy Sources dated August 29, 1979, five hundred thousand United States dollars ($500,000) and hereby agrees to grant the Republic of Panama under the Project Grant Agreement of August 29, 1979 for Alternative Energy Sources, as modified by this Amendment No. 1, an additional amount not to exceed one hundred and twenty-five

exceda ciento veinticinco mil dólares de los Estados Unidos (EE.UU.) ($125,000) ("Donación"). Aumentos adicionales que no excedan de doscientos mil dólares de los Estados Unidos (EE.UU.) ($200,000) podrían ser disponibles mientras el proyecto esté en vigencia sujeto a las condiciones de la Sección 2.2(a).

La Donación puede ser utilizada para financiar costos extranjeros, tal como se define en la Sección 6.1, y gastos locales como se define en la Sección 6.2 de bienes y servicios requeridos para el Proyecto.

Con excepción de lo expresamente modificado en esta enmienda, todos los otros términos y condiciones del Convenio permanecen en vigencia y efecto.

EN FE DE LO CUAL, el Donatario y los Estados Unidos de América, mediante sus representantes debidamente autorizados, celebran este Convenio a ser firmado en sus nombres el 18 de agosto de 1980.

thousand United States (U.S.) dollars ($125,000) ("Grant"). Additional increments not to exceed two hundred thousand United States dollars (U.S.) ($200,000) may be made available during the life of the project subject to the provisions of Section 2.2(a).

The Grant may be used to finance Offshore Costs, as defined in Section 6.1 and Local Costs, as defined in Section 6.2 of goods and services required for the Project.

Except as expressly modified by this amendment, all other terms and conditions of the Agreement remain in full force and effect.

IN WITNESS WHEREOF, the Grantee and the United States of America, each acting through its duly authorized representatives have caused this Agreement to be signed in their names and delivered as of August 18, 1980.

REPUBLICA DE PANAMA

Arq. Edwin Fábrega
Director General del Instituto de
Recursos Hidráulicos y Electrificación

Lic. Abdiel F. Julio
Viceministro de Planificación y
Política Económica

UNITED STATES OF AMERICA

Ing. Aldeimo Ruiz
Director
USAID/Panama

PANAMA - ALTERNATIVE ENERGY SOURCES

Table of Contents

		Page
I.	SUMMARY	1
II.	PROJECT BACKGROUND AND DESCRIPTION	5
	A. Background	5
	1. Panama's Energy Sources and Consumption	5
	2. Effect on Panama's Economic Development	7
	3. Effect on Low Income Families	7
	4. GOP Priority for Development of Alternative Energy Sources	9
	5. Energy Sector Development Strategy	10
	B. Project Description	11
	1. Goal and Purpose	11
	2. Activities	12
	a. Institutional Development	12
	b. Selection of Sources and Applications	14
	c. Feasibility Studies	18
	d. Demonstration Projects	20
	e. Master Plan for Alternative Energy Sources	33
	f. Evaluation	35
	3. Input Summary	36
III.	PROJECT ANALYSIS	37
	A. AID Strategy and Relation to Other AID Programs	37
	1. AID Strategy in Panama	37
	2. Relation to Other AID Funded Programs	38
	3. GOP Strategy for Development of Alternative Energy Sources	38
	B. Technical Analysis	38
	1. Scope	38
	2. Adoption of Technologies for which Feasibility Studies will be Prepared	39
	3. Replicability of Demonstration Projects	42
	C. Economic Analysis Summary	45

		Page
	D. Social Soundness Summary	46
	E. Administrative Feasibility Summary	47
	F. Environmental Concerns	47
IV.	IMPLEMENTATION ARRANGEMENTS	49
	A. Finaucial Plan	49
	1. Budget Summary	49
	2. Recurrent Costs	49
	B. Implementation Plan	49
	C. Evaluation Plan	51
	D. Conditions, Covenants and Negotiating Status	52
	E. Source/Origin Waiver for Training Services	52

ANNEXES

A. Logical Framework
B. Statutory Checklist
C. Request for Assistance
D. Draft Authorization
E. PID Approval Message
F. Environmental Threshold Decision
G. Detailed Project Budget
H. Technical Annexes:

1. Detailed Description of Institutional Development
2. Substitute Demonstration Projects
3. Prefeasibility Study on Agricultural Waste Utilization
4. Data on IRHE Isolated Electric Systems
5. Solar and Wind Resource Characterization
6. Technical Analysis
7. Economic Analysis for Demonstration Projects
8. Social Soundness Analysis
9. IRHE Administrative Structure

PROJECT PAPER (PP)

PANAMA - ALTERNATIVE ENERGY SOURCES

I. SUMMARY

Panama depends on imported oil for approximately 71% of its energy needs. Barring unforseen developments, the amount of oil needed to fuel Panama's economic growth and development is expected to increase over the remainder of this century. Given the rapidly increasing price of oil and the high cost, technological difficulties and negative environmental consequences of switching to other non-renewable fuels, the development of renewable energy sources will be increasingly vital to Panama's orderly growth and development.

Concern for developing alternative energy sources is evident in all sectors of Panamanian society, and the Government of Panama (GOP) is especially interested in their development. One GOP institution - the Water Resources and Electrification Institute (IRHE) - has recently created an office whose major purpose is to develop alternative energy sources. While this action represents a very modest beginning in the face of an enormous development problem, it is a start.

The purpose of this project is to improve IRHE's capability to identify, analyze and develop renewable energy sources and applications. Through the project, IRHE's institutional capability will be strengthened by staff development, generation and dissemination of information on alternative energy sources and applications, feasibility studies for promising applications, demonstration of available energy conversion technologies, and development of an alternative energy Master Plan. Six demonstration projects which utilize bio-mass, solar and bio-gas resources in practical applications will be carried out. These applications include electric energy production for rural communities, water heating, air conditioning, and water pumping. The institutional capability developed and the experience gained with alternative energy conversion technologies will facilitate production of additional energy in rural areas through IRHE investments and technical advice to the private sector.

The basis for replication of the project will be further developed through preparation of a Master Plan for alternative energy sources. This Plan will utilize the results of an energy assessment, feasibility studies, evaluations of the demonstration projects, and the data generated through other project activities to identify sites for additional applications of renewable energy sources, develop institutional mechanisms which will facilitate their replication and recommend policies to encourage their development.

The demonstration projects illustrate a small number of specific applications of bio-mass, solar and bio-gas fueled energy technologies in rural settings. These technologies have been matched with a specific (and therefore, limiting) set of engineering, economic, social and environmental performance requirements. Once technological feasibility is demonstrated, they can be adapted for additional uses as these requirements become less limiting due to technological advances, broader utilization of the technology, and greater experience on the part of IRHE and potential users.

The purpose of the demonstrations is to:

- Collect and disseminate data on the engineering, economic, social and environmental aspects of the use of alternative energy technologies.

- Introduce alternative energy technologies to Panama in a series of appropriate uses which provide direct or indirect benefits to poor people and others in Panama.

- Prepare Panamanian energy planners and engineers for the time when new alternative energy technologies will be economically competitive with other energy sources and technologies.

The demonstration projects include appropriate applications of the following technologies:

- Conversion of wood wastes to produce electric energy in rural villages.

- Solar hot water heating in rural and urban health centers.

- Solar air conditioning in a hospital and a fish culture laboratory.

- The use of methane from animal waste digestion to pump water and supply cooking fuel on rural farms.

Each of these technologies can be replicated a large number of times in Panama. Each of them will be new to Panama although the particular technology-use matches can be found in other parts of the world.

The energy conversion processes demonstrated through the project will utilize already available and, in most cases, simple technology. Most of them are economically feasible right now, and others are expected to be feasible in the near future, given expected advances in technological development and the probability

of continued rapid increased in oil prices. The sites that have been selected offer good prospects for successful demonstration of the technology. The community groups and organizations who will be involved in developing them and who will be responsible for their operation and maintenance are known to IRHE and the Mission as responsible, hard working people who are desirous of both improving their living conditions and learning new skills.

Ultimately, the benefits of the project will accrue to all sectors of Panama's population, including the poor. Most of the energy conversion technologies that will be demonstrated hold potential direct or indirect benefits for AID's major target group in Panama - low income rural families. However, due to the very limited scope of this largely experimental, technology transfer project, actual benefits for this group will be somewhat limited during the life of the project. The project is expected to create the basis for diffusion of appropriate, low capital technology under a subsequent project (planned FY 81 Alternative Energy Sources II Loan). It is expected that significant target group benefits will result from that project.

The cost of the present project is estimated at $1,375,000. This will be financed by an AID Grant of $825,000, and a GOP counterpart contribution of $550,000.

SUMMARY FINANCIAL PLAN ($000)

	AID	GOP	TOTAL
Institutional Development Activities	95	230	325
Demonstration Projects	355	270	625
Feasbility Studies	175	50	225
Master Plan	150	--	150
Evaluation	50	--	50
TOTAL	825	550	1,375

The project has been developed by IRHE and USAID/Panama with assistance from DS/EY and Mission contracted consultants. The following individuals have contributed:

IRHE

Ing. Arnulfo Ho, Assistant to the Director General
Ing. Victor Ossa, Chief of Isolated Systems
Ing. Isaac Castillo, Chief, Renewable Energy Sources and Conservation Unit (RESCU)

Ing. Teresa See de Bryson, RESCU
Ing. Jaime León, RESCU
Ing. José González, RESCU
Lic. José Coronado, RESCU

USAID/Panama

Lynn Sheldon, IDI - Engineer
Benjamin Severn, Economist
Marcia Bernbaum, IDI - Social Science Analyst
Jane Stanley, Environmental Officer
Eric Zallman, Finance Officer (Project Manager)

Project Consultants

James Westfield, Development Sciences, Inc.
Richard Jorgenson, Independent Consultant
Jerry Birchfield, Georgia Institute of Technology
Grant Curtis, Georgia Institute of Technology

USAID/Panama Project Review Committee

Harlan Davis, Chief, Technology and Employment Office
Ronald Russell, Chief, Office of Development Resources
Richard Solloway, Acting Controller
Julio Villafañe, Acting Chief, Office of Engineering Services
William P. Schoux, Program Officer
Warren Lane, Acting Director

II. PROJECT DESCRIPTION

A. Background

1. Panama's Energy Sources and Consumption. At present, Panama is highly dependent on petroleum derivatives for production of energy. In 1975, approximately 71% of the country's energy was produced from oil, all of which was imported. Other sources of energy at present include hydro resources (13%), and wood and bagasse (15%). The use of hydro sources will be greatly expanded over the rest of the century and they will provide an increasing share of Panama's energy supply. With overall demand for energy increasing at 6-8% per year, oil consumption is also expected to rise sharply in the future (see Table I).

   The prospects for substituting other non-renewable sources of energy for imported oil to meet all or part of the increased demand are not bright. Although there have been repeated attempts to find oil within Panamanian territory (including offshore areas) no commercially exploitable deposits have yet been found. Geothermal sources are now being investigated at a site near the Costa Rican border. However, even if this resource ultimately proves commercially exploitable, it would only be utilizable for generation of electricity and would provide only a minor percentage of the country's electric power, which at present accounts for about 20% of the country's energy use. There are no developed coal deposits in Panama. Although there are indications that coal does exist, there are no plans for commercial exploitation. There is commercial coal production in Colombia, but sufficient and dependable supplies are available only from the United States, which is a high cost source. At the present time the initial investment for large coal fired plants is generally higher than for oil fired units and the cost of coal handling equipment, installation of scrubbers and particle emission control equipment is greater than the savings realized by substitution of raw materials (i.e., from oil to coal). Nuclear energy generation requires very large installations in order to be cost competitive with other energy sources. This source can only be used for electric generation with present technology and Panama's projected load requirements through the year 2000, at least, are not sufficient to justify the large units (600 MW and up) required to make large investments in nuclear energy feasible.

   Some of these sources may eventually supply a percentage of Panama's energy. Their adoption will depend on such factors as the relative cost and availability of oil and other sources over time, technological developments which

TABLE I

ESTIMATED ENERGY CONSUMPTION IN PANAMA 1/

Energy Source	Use	Thousands of Equivalent Tons of Oil			
		Actual	Projected		
		1975	1980	1985	1990
Petroleum	Commercial:				
	Industry	202	299	525	791
	Transportation	441	572	750	945
	Electricity	514	703	778	511
	Domestic/Other	295	386	611	754
	Sub-total	1,452	1,960	2,664	3,001
Hydro	Electricity	267	618	[illegible]	3,249
	Total Commercial	1,719	2,578	4,162	6,250
Wood	Non Commercial:				
Bagasse	Industry	113	147	118	128
	Other	201	225	157	138
	Total Non-Commercial	314	372	275	266
	GRAND TOTAL	2,033	2,950	4,437	6,516

1/ Excluding the Canal Zone. Source: Estimates of the Alternative Energy Sources and Conservation Office of the Water Resources and Electrification Institute, based on information from CEPAL.

improve the efficiency with which they are extracted and utilized, and availability of capital to finance power production and transmission. The large number of "ifs" implicit in making these alternative sources economically and technically feasible, makes long range planning for their development at this time difficult. Furthermore, except for hydro and geothermal sources, all are non-renewable fossil fuels whose cost can be expected to rise more rapidly than renewable sources.

2. Effect on Panama's Economic Development. The high and rising costs of Panama's present energy sources are hampering Panama's economic development. An increasing percentage of export earnings are being drawn off to pay for increased oil consumption. Despite its relatively well educated workforce and locational advantage at the "crossroads of world trade", and there has been virtually no new investment in private industrial development over the last three to four years. While the major reasons for this include questions of government policy, uncertainty regarding treaty signature and implementation, and a relatively stringent labor code, the basic profitability of industries also enters into the equation. Panama has not, for example, developed the kind of manufacturing activities common to many developing countries, e.g., textiles, assembly of manufactured goods. These industries depend heavily on electric energy for power. As indicated in Table II the price of electric energy is more expensive than in other Latin American countries, adding another disincentive to investment to the factors mentioned above.

   In the agricultural sector, overall production has increased very slowly over the last few years. major productive activities are scattered across the Central and Western Provinces, a thinly populated area having poor soils and unfavorable climatic conditions. The dispersed location of agricultural activities makes provision of energy for on-farm and community level productive activities a costly proposition. Transportation costs for delivery of agricultural inputs and for hauling products to market are also high, in part due to the high cost of gasoline and diesel fuel (see Table II).

3. Effect on Low Income Families. Low income families are concentrated in slum areas of Panama City and Colon, and scattered throughout the rural areas. The large majority of low income rural poor live in the Central and Western regions. These groups are the target group for AID-financed projects in Panama.

TABLE II

"ENERGY PRICES IN LATIN AMERICAN COUNTRIES AS OF 12/31/76"

Country	Automobile Gas in US$/Liter		Automotive Diesel in US$/Liter	Kerosene in US$/Liter		Electric Energy in US$/KWH for the Sector		
	Regular	Super		Domestic	Industrial	Industrial	Residential	Commercial
Bolivia	0.075	0.100	0.065	0.015	-	-	-	-
Colombia	0.059	0.084	0.056	0.056	0.056	0.017	0.013	-
Costa Rica	0.259	-	0.1189	0.1189	0.1189	0.0376	0.0409	0.0411
Guatemala	0.2470	0.2584	0.1490	0.1453	-	-	-	-
Mexico	0.123	0.176	0.029	0.024	0.024	0.013	0.027	0.031
Nicaragua	0.21	0.23	0.15	0.15	0.15	0.048	0.092	0.066
Panama	0.264	0.291	0.145	0.145	0.145	0.0520	0.0614	0.0564
Uruguay	0.36	0.50	0.18	0.19	0.19	0.04	0.05	0.08
Venezuela	0.03488	0.0813953	0.02325	0.02325	0.02325	0.0219	0.0542	0.0433
Jamaica	0.0716	0.00659	0.0264	0.0205	-	0.074	0.096	0.055
Ecuador	0.0513	0.0577	0.0453	0.0402	-	0.027	0.032	0.039

SOURCE: Data compiled by ECLA. Sources for country specific data available in USAID/Panama files.

In rural areas, most low income families simply don't use commercial energy, either because it is not available to them (e.g., because their farms are not served by electric lines), or because it is too expensive given their low incomes. In isolated areas, wood is the principal fuel for cooking. Kerosene and gas can be brought in by truck or boat to those areas served by roads or waterways. However, the cost of such fuel is much more expensive than in less isolated areas, or, where the price is controlled, availability is limited. Animal traction is used on most farms and in 1971, 80% of all farms did not use mechanized traction. Lack of affordable energy limits earning potential among low income residents in isolated areas. Perishable products must be sold immediately, often at low prices, and storables are difficult to dry to meet market requirements in Panama's humid climate. Fish and seafood must be sold or consumed immediately limiting potential commercial activity in this area.

In urban areas, high energy costs are resulting in decreasing disposable incomes for low income families. The costs of bus transportation and electricity have been raised substantially in recent years, wages are frozen in large sectors of the economy and employment has actually decreased over the last few years. Higher energy costs are contributing to a general decline in living standards and their effects are felt most strongly by the low income families.

4. GOP Priority for Developing Alternative Energy Sources. Until about 1973, the cost of electricity generated from thermal sources was about equal to the cost of hydro-generated electricity. The rapid increase in oil prices in 1973 and 1974, left Panama's economy reeling from the impact of a large and unforeseen drain on export earnings to pay for increased fuel costs. The GOP began a crash program to develop the country's untapped hydroelectric resources. Since that time, approximately $200 million have been invested in hydroelectric generating facilities with the first two major projects (Bayano and Estrella-Los Valles) starting to produce. Present plans call for an investment of $714 million (at current prices) through 1990, at which time 4 major facilities with a combined peak generating capacity of 1,120 Megawatts will be completed. This will reduce oil consumption used for electric generation from 2.3 million barrels in 1975, to 2.2 million barrels in 1990 despite an increase in output from 1,000 GWH in 1975 to 6,000 GWH in 1990.1/ Additional hydroelectric facilities will be started during the early 1990's and should meet most Panama's demand for electricity supplied through the national grid through 2000.

1/ Data derived by Mission from IRHE Annual Report for 1975 and IRHE Master Plan, 1976.

These massive investments, which will be partially financed by the World Bank, the Inter-American Development Bank, and suppliers, represent a large shift to an alternative and renewable energy source, albeit a conventional one. Investments in energy sector development are expected to average $47.6 million/year from 1975-1990 (at current prices), which is approximately 13.5% of the average GOP investment level over the last three years. This demonstrates the high priority that the GOP has given to energy sector development.

5. Energy Sector Development Strategy. It is clear that while massive investment in hydroelectric generating capacity will to some extent blunt the effects of an expected continual rise in the cost of traditional energy sources, it will do little more than provide additional time for development of other alternatives before the percentage of the country's energy supplied from hydro sources begins to decline. In the meantime, overall demand for traditional sources of energy will continue to rise, even in the unlikely event of a major breakthrough in solar or nuclear energy technology. If such a breakthrough does occur, the new investment that would be required to develop and transmit energy from these capital intensive sources will likely be immense, and service to low income families and isolated settlements limited, as at present, by the large investment required to serve marginal users.

In response, the GOP is following a two part strategy for satisfying the country's long range demand for energy. The first part is to develop large scale substitutes for energy produced from oil. This will be accomplished by conversion to hydro generated electric energy and by eventual large scale production of fuels from alternative sources (e.g., wood from energy plantations; alcohol from sugar or yuca). The technology for efficient utilization of hydro sources is well known and presently available. The technology for large scale production of alternative (i.e., non-oil based) fuels is less developed, or the energy produced is still expensive compared to oil, or there are potentially significant negative environmental consequences that may result from the productive process. Except for hydro sources, Panama will have to wait for technology to be developed elsewhere in the world that it can import to enable large scale, environmentally sound production of fuel that can be economically substituted for oil.

As energy from hydro sources and non-oil based fuels become available, the country will be able to provide increasing amounts of relatively inexpensive energy to the large majority of Panamanians who live in areas that are or will

be served by basic infrastructure, i.e., roads and the national electric grid. The electric grid at present serves 49% of the country's population and by 1990 will reach some 75%. The country's primary and secondary road network (over which petroleum products and non-oil based fuels can be transported) reaches most Panamanians at present.

Two major classes of energy users will not be efficiently served by these energy sources: those who live in isolated areas or towns not served by basic infrastructure; and those for whom energy made available through these systems is unusable or relatively high cost. For example, electric energy or non-oil based fuels will not run most trucks, busses or farm tractors for the foreseeable future, barring some unforeseen technological breakthrough. The second part of the strategy, then, is to identify and provide cost effective non-conventional energy sources for the users who will not be efficiently served through the country's basic infrastructure network. The productive potential of these users, especially low income families and settlers in isolated areas, is limited at present by low access to, or high cost of energy. Their productive activities and their standard of living can be improved now by provision of energy from alternative sources. This project is designed to support both parts of the GOP's strategy.

B. Project Description

1. Goal and Purpose. The Goal of the project is to improve the standard of living for low income rural and urban families and to further the country's economic development. The target group is all low income families in the country. The Mission estimates that there are presently 714,000 people or about 130,000 families in this group. They have incomes below the Mission poverty line figure of $304 per capita annual income in rural areas or below $517 in the country's major urban areas.1/ These families will benefit in two ways. First, a small number of families will be provided usable energy from demonstration projects. Others will learn how these sources can be developed on their own farms and in their own communities. Second, the project will initiate the development of a GOP program to eventually provide relatively low cost, dependable energy for productive and consumption purposes. The target group will benefit from this effort, over the long run, in both direct and indirect ways (e.g., higher disposable incomes, cheaper transportation, improved and more accesible government services, cheaper agricultural inputs and lower storage costs for agricultural products).

1/ See CDSS for calculations.

The Purpose of the project is to improve the capability of the Hydraulic Resources and Electrification Institute (IRHE) to identify, analyze and develop renewable and alternative energy sources and applications with emphasis on rural areas. The purpose will be achieved by a combination of training for IRHE personnel, practical experience with demonstration projects, and participation in the development of feasibility studies and an alternative energy master plan. During the life of the project, IRHE will increase the staff of the Renewable Energy Sources and Conservation Unit of the Studies Department[2/] from 5 to 12 professionals, and increase its operating budget from $98,000 in 1978 to $200,000 in 1981. In contrast to the rest of the IRHE structure, whose function is mainly to produce and sell electicity, this office will be oriented towards responding to requests from communities, enterprises, groups and individuals for assistance in solving energy problems through alternative sources and will actively seek sites for development of new conversion technologies.

2. Activities

a. Institutional Development

(1) Staff Development. The Renewable Energy Sources and Conservation Unit (RESCU) of IRHE's Studies Department was created in the fall of 1978. It is presently staffed by five full time professionals: an electronics engineer (office chief), an economist, a mechanical engineer, a biochemical engineer and a chemical engineer. The office has been given a broad mandate by IRHE's top management to investigate and develop any and all feasible alternatives to replace presently used primary sources (except for hydro, which is the responsibility of other departments within IRHE). The office plans to eventually test and evaluate solar and wind power applications, fuel production through pyrolysis, bio-gas, and energy plantation projects, and other renewable sources.

The office's present staff and planned hiring for 1980 and 1981 is shown in Table III.

2/ This Department is located in IRHE's Development Directorate. See organization chart of this Directorate in Annex H.9.

TABLE III - HIRING PLAN

RENEWABLE ENERGY SOURCES AND CONSERVATION UNIT (RESCU)

Activities	1979	1980	1981
Management	1 Electronics Engineer*		
Planning and Analysis	1 Economist* 1 Systems Analyst	1 Economist	
Solar/Wind	1 Mechanical Engineer*	1 Mechanical Engineer	1 Chemical Engineer
Bio-Gas	1 Bio-Chemical Engineer*		
Bio-Mass	1 Chemical Engineer* 1 Electrical Engineer	1 Combustion Engineer	
Energy Conservation		1 Industrial Engineer	

* Presently on board.

The principal task of these professionals will be to evaluate the technical and economic feasibility of adapting sources and applications developed elsewhere for use in Panama. While all of these personnel will undoubtedly be enthusiastic about working in alternative energy sources, they are unlikely to have any specialized training or experience in adaptation of technology in this area.

Grant funds of $50,000 have been programmed for training present and new employees through short courses and observation trips in the U.S. and other Latin American countries. A training plan is included in Annex H.1. This training will

permit the office's professionals to familiarize themselves with specific alternative energy sources and applications that might be introduced in Panama. Given the project's basic "technology transfer" orientation, no long term training is programmed at this time. However, the skills of the employees hired and project needs may dictate the use of some of these funds for long term training. IRHE counterpart of $190,000 will cover salaries and non-reimbursable expenses of participants and the increased operational costs of the RESCU.

(2) Information Generation and Dissemination. This activity will consist of four interrelated elements. Data on solar radiation and wind direction and intensity will be collected and analyzed. Books, newspaper articles and periodicals will be obtained, classified, and organized into a library system. These data will be used in carrying out two information dissemination activities: courses and seminars for personnel from the private sector and other GOP institutions; and a newsletter for key public and private sector agencies who are large consumers of energy or are interested in alternative energy applications in their productive activities. These activities will cost a total of $85,000 of which $45,000 will be financed by the Grant. A detailed description of the activities is included in Annex H.1.

b. Selection of Sources and Applications.

In attempting to select sources and applications for further study and demonstration, IRHE is confronted with a difficult task. The abundant literature on alternative energy is full of claims and counterclaims regarding technical and economic feasibility of different energy conversion techniques. However, there appear to be relatively few proven techniques that can be successfully adapted by developing countries right now. Most of the alternative technologies developed to date suffer from one or more of the following problems: difficulties in collecting appropriate raw materials (e.g., animal excreta); complex systems which can create maintenance problems; difficulties in storing or transporting the energy produced; and high capital cost.

(1) Selection of Alternative Energy Sources.

(a) Sources. At the start of Project Development, IRHE and the Mission reviewed a number

of possible alternative energy sources for inclusion in the program. These included: hydro-power; bio-mass; agricultural and animal wastes; municipal sewage and refuse; and solar, wind and tidal energy. The latter was immediately excluded because it is too experimental. Other sources were excluded because GOP is already developing them through, or expects to receive assistance under other programs. IRHE's large investment in hydro-electric complexes has already been mentioned. In addition, IRHE is preparing to request financing in 1981 or 1982 from IDB for small and mini hydros to serve isolated areas. However, micro hydros (5-50 KW) to serve asentamientos (agrarian reform settlements), cooperatives, production schools (such as those being financed under AID Loan 525-V-043), and Government installations and experimental farms not connected to the national grid were identified as an area of interest for possible inclusion in the project. The Ministry of Agricultural Development (MIDA) has been given a mandate to begin alcohol production from sugar cane and other agricultural products and wastes and use it for fuel in transportation and other sectors. A proposal by a private sector organization to build an alcohol production facility is currently being reviewed by the Minister. Efforts to improve efficiency in the use of the firewood were specifically excluded in anticipation of assistance from ICAITI in this area. This assistance is expected to become available through a ROCAP financed energy project. IRHE has already purchased five windmills and intends to install them and assess their performance concurrently with the implementation of this project. Municipal sewage and refuse is the responsibility of other GOP organizations and there would be little role for IRHE in replicating the technology demonstrated.

Thus the original list was narrowed down to four sources - micro-hydros, bio-mass, agricultural and animal wastes, and solar - to be studied or demonstrated under this project.

(b) Applications. Theoretically, these sources can be used for a variety of different applications. For technical reasons, however, the number of feasible applications (i.e., those

for which the technology is already available) are limited. When economic considerations are added, the kinds of applications that are feasible right now or will be in the near future is further narrowed. IRHE and AID have agreed to restrict the project to those applications for which the technology is already developed and has been proved to work. Questions of economic feasiblity have been a secondary consideration. Finally, where community groups or organizations would be involved in implementation, questions of the ability of these organizations to understand the technology, and their attitudes about adoption of new technology have been taken into consideration. In all of this, both IRHE and AID have agreed that conservatism (i.e., adopting the least risky applications) is essential to avoid setting the cause of alternative energy sources back by failure to produce workable systems.

A number of proposed applications were considered for inclusion in the project. Some were considered unfeasible for technical, economic or social equity reasons. A few were excluded because they will be worked on through other programs. For example, MIDA's Agricultural Research Institute (IDIAP) is interested in incorporating improvements in on-farm energy into its Applied Research Program. More efficient energy utilization in crop production and post harvest activities will be developed under this program, which AID is planning to support with FY 79 Loan/Grant scheduled for July 1979 authorization. IRHE is expected to serve in a consulting capacity to IDIAP in implementing the program.

Two of the most promising conversion technologies - micro hydros and utilization of agricultural wastes - were set aside for feasibility studies as there was insufficient data to confirm feasiblity at this time. Other technologies - bio-mass, solar and bio digestion - have been studied sufficiently to allow testing their adaptability to Panama's needs through demonstration projects included in the project.

(c) Criteria.

Ideally, the sources and applications selected would meet these criteria:

- The conversion technology can be used in productive activities that are undertaken by AID's target group in Panama.

- The technology is economically and technically feasible and environmentally sound.

- The physical components can be assembled largely from locally available materials.

- Good potential for replicability (i.e., adaptable to other sites and uses).

- Minimal maintenance is required to keep the physical plant operating properly.

- The investment required is small enough that low income individuals or groups, or communities comprised largely of low income families, could take on the investment burden if they adopt the technology.

- The overall energy gain is at least 2 to 1.

- The energy is produced in a form readily usable by low income families.

- If energy is produced for sale to the community in general, a sufficient market must be demonstrable.

In practice, this set of criteria are very limiting. Each application selected for further study or demonstration meets most but not necessarily all of the above criteria. The applications selected are all technologically feasible and taken as a whole, provide a good balance between concern for overall economic growth, and equity for the low income target group. Should it become necessary during implementation to select one or more alternative applications to those included in the project, the above criteria will be applied. Examples of some potential substitute applications are described in Annex H.2.

c. Feasibility Studies.

(1) Micro-Hydros. Of all renewable energy sources, hydro-power is one of the most feasible. The technology is known and proven, the economics favorable and the reliability and quality of service excellent. Over the years, the scale of hydrogeneration units in developed countries has grown, and developing countries have tended to import both design standards and hardware in designing and building hydroelectric plants. Very small plants - micro-hydros of 2-50 KW - utilize much simpler designs and hardware, and can efficiently provide electricity to rural productive enterprises. According to one source, General Electric Company, after abandoning production some years ago, has recently begun building of 50 KW turbines again in response to increasing demand in the U.S.

IRHE has received a number of requests from private individuals and groups to assist them in designing and constructing small units. Micro-hydros would be especially adaptable to asentamientos, cooperatives, very small settlements (up to 60 familes), government agricultural experiment stations and production schools that are not connected to the national electric grid. Up till now, IRHE has not provided significant assistance to these groups and institutions. Based on preliminary analyses carried out during project development, IRHE believes that such systems will be feasible in many cases and wishes to start responding to these requests.

Under the project, IRHE will assign two full time engineers to work on identifying and evaluating sites for micro-hydros and preparing feasibility studies for the most promising sites. A target of 40 feasibility studies has been set for completion under the project. The salaries and increased operating costs attributable to preparation of the feasibility studies are estimated at $50,000, which will be financed completely by IRHE.

IRHE will need assistance in site selection and evaluation of technological alternatives in carrying out the feasibility studies. It will also need assistance in developing its own capacity to produce and service small turbines, and advice

in proper construction and installation techniques. These advisory services will be provided by a small scale hydro systems engineer. The estimated cost of these services is $75,000, which will be financed under the Grant.

The many uses of hydro power are well known. In addition to generation of electricity, with its large number of uses, the power can be used directly in grain milling and grinding operations and stationary mechanical power in general. A few examples of the use of electricity in rural areas are: lighting for domestic and productive activities (e.g., cottage industries, raising chickens); water pumping for domestic use and irrigation; refrigeration of farm produce for home consumption and sale; and education uses such as night studying and courses.

(2) Utilization of Agricultural Wastes. Panama's principal food crop is rice. Sugar is a major agricultural export. Both of these products have two major waste products: sugar cane stalks and rice shoots, which are left in the fields; and rice hulls and bagasse, which remain after processing the harvested portion of the plant. Other agricultural products also produce wastes. Bagasse is presently used to fuel the boilers of the state owned sugar corporations' processing plants. However there is excess bagasse production of approximately 88,000 metric tons after the sugar harvest. The sugar corporation pays to have this material removed.

Rice hulls are a particularly good potential fuel. They are relatively dry and easy to transport. At present, they are removed from the country's rice mills and dumped along roads often at a cost to the milling enterprises. Technology has been developed in Asia to make fuel from this agricultural waste. Preliminary results appear to confirm that this wasted resource can be translated into a practical and efficient fuel. Rice milling goes all year long in Panama, and a relatively constant supply of the raw material is available.

Preliminary assessment of the utilization of rice hulls for energy production was studied by a team from Georgia Institute of Technology. Based on their experience in related projects in the U.S., they believe that relatively inexpensive systems could be designed to use this potential energy

source for applications such as rice and onion drying, meat storage, milk cooling and airconditioning. They believe, as do IRHE and the Mission, that these possible (bio-mass) applications merit additional study and development. Very rough designs and calculations included in Annex H.3, indicate that the technology would be low cost, provide additional employment and have a payback period of two to five years.

Under the project, the technical, social and economic feasibility of specific applications of agricultural wastes, such as rice hulls, to meeting the need for energy in rural areas will be analyzed. Specific sites and institutional mechanisms for achieving construction of feasible projects will be recommended. Final feasibility studies and engineering designs for these applications will be prepared. The cost of these studies is estimated at $100,000, which will be financed under the Grant.

d. Demonstration Projects.

(1) Bio-Mass Demonstration Project. Next to hydro sources, and utilization of agricultural wastes, wood almost certainly holds the greatest promise as a renewable source in Panama. Man has been using wood for fuel since before the stone age, and it is still in wide use in Panama and the rest of the developing world, especially in isolated rural communities, for cooking and other purposes. With the "expensive energy" era approaching rapidly, wood is being re-examined as a possible "new" source of fuel for larger scale applications. The economics of large scale production and utilization of wood for fuel are becoming increasingly favorable in comparison to coal and oil. The economics can be especially favorable when silvicultural wastes are utilized.

IRHE presently owns and manages 34 isolated electric systems (i.e., systems not connected to the national grid). It manages another 24 isolated systems owned by other organizations. These systems are all thermal generation operations fueled by diesel or Bunker-C. Most of them are accessible only by sea and inland waterways. Almost all of them have difficulty in obtaining regular fuel deliveries and maintenance and repair services. The service they provide is as best

erratic, and they all lose money. Data on operating characteristics (see Annex H.4.) shows that the cost of operators salaries and fuel alone varies from 9¢ to 72¢ per KWH. When distribution costs, maintenance and repairs and depreciation are added, IRHE estimates that it is spending from $.15 to $.85 for each KWH sold. IRHE charges customers about 9¢ per KWH.

Some of these systems can be replaced by hydrogeneration. IRHE is presently studying these sites and intends to request IDB financing for small hydros. In other cases, hydropower is not a realistic possibility. One of these sites has been selected as a site for a project to demonstrate a simple technology to generate electricity using local, renewable resources. The site selected is Yaviza (elevation 10 meters) in the Darién jungle. Yaviza has had diesel powered electricity for over 20 years. Operating characteristics for the existing system are included in Annex H.4.

Under the project, a direct combustion steam boiler/turbo generator system will be constructed. Local wood waste and harvested wood will be used for fuel. A forest reserve of 2000-3000 hectares will be created as an energy plantation to ensure a long term source of fuel for the plant. Marketable hardwood species will be planted if reforestation of the reserve is required, so that if the reserve is not needed for fuel, the trees can be sold for timber.

Demonstration of this technology will have several direct and indirect benefits. Currently imported fuel oil will be displaced by wood and a cost savings of $45,000 per year for fuel will be realized. Secondary benefits will include creation of at least 6 local jobs, improvement of productivity of local forests, development of techniques to diminish deforestation, and development of local administrative experience in alternative energy system management. The proposed plant will be managed by IRHE. The "energy plantation" will be developed under a concession from the Ministry of Agricultural Development's Directorate of Renewable Natural Resources (RENARE). This organization will also provide technical guidance in development of appropriate plant materials and organization of the "plantation". The plant will

provide electricity to residents and industry in Yaviza, El Real de Santa María, and Pinogana. These communities have a total population of about 2,000 people. A 120 KW plant is planned to replace three of the four existing diesel generators at Yaviza.

The principal industry in the Yaviza area is lumbering, with some ten sawmills and loggers now operating. Initially at least, local labor will be used to convert currently discarded mill wastes to boiler fuel. This source of fuel will be utilized as long as lumbering operations provide sufficient raw materials for the plant. Should use of the forest reserve be required, the same labor and capital equipment will be used to harvest wood from the "energy plantation".

A consultant will be contracted to design, fabricate, install and test the plant and also provide technical assistance to IRHE officials and plant operatives in operating the plant and producing wood on a renewable basis. The consultant will also prepare a plan jointly with RENARE and IRHE, for development of the energy plantation. This plan will be prepared during the first year of implementation. The plantation will be jointly developed by RENARE and IRHE with non-project resources. The consultant will also carry out a preliminary evaluation of the demonstration project. The project is estimated to cost $450,000, of which $325,000 will be financed by the Grant and $125,000 by IRHE.

The technology to be demonstrated through this project has potential for a broad series of applications. Basically any stationary energy requirement could be met through the same technology. Dry agricultural wastes could also be used to fire the boiler. Possible additional applications include milling and grinding (e.g., for rice, corn, other grains, coffee); sawmills; power for industries and agroindustries of all types; and large government installations. Degree of isolation and economies of scale will be major determinants of the feasibility of such applications.

(2) Direct Solar Conversion. Next to energy conversion through bio-mass, direct solar conversion is probably the most feasible alternative energy source for Panama. Due to its geographic location,

almost even number of hours of daylight, and large areas with a high degree of solar radiation, Panama will eventually come to depend on solar energy to a much greater degree than at the present. A solar and wind resource characterization is included in Annex H.5.

Solar conversion is often accomplished through technology such as flatplate or concentrating collectors or photovoltaics. At present, the most well developed and reliable systems are solar collectors, which are used for solar assisted space heating and cooling and for domestic and commercial hot water heating. Photovoltaic electricity systems are also feasible in isolated areas for small wattage uses such as communications and signal lighting.

More sophisticated systems are being tested and employed in many areas of the world and their application could be tested later in Panama. However, solar assisted and total solar hot water heating and space cooling is almost competitive with other energy systems, especially in remote areas or where electricity is provided by low efficiency diesel generation. Larger direct energy savings are possible through use of solar hot water heating and solar assisted cooling in cities and urban areas. Solar powered adsorption coolers and hot water heaters have been shown to achieve overall savings in less than 10 years when compared to diesel powered systems. Solar systems can pay back the extra capital required initially through decreased operation and maintenance costs.

Three types of solar demonstration projects - air conditioning, hot water heating, and photovoltaics - will be demonstrated under the project.

(a) Solar Assisted Air Conditioning. Air conditioning is one of the largest uses of electricity in Panama. It is estimated that perhaps a third or more of the daytime load in major cities throughout the country is due to air conditioning. Improvement in the efficiency of providing aircooling could have a dramatic effect over the long run in decreasing energy use and consequently in reducing oil imports. Two demonstrations

of this conversion technology are planned: first at the Cecilio Castillero Hospital in Chitré and second at the Marine Research Station of the National Directorate of Aquaculture (DINAAC) in Aguadulce.

Castillero Hospital, which was built with AID assistance, presently has several conventional air conditioning systems which cool different parts of the building. The delivery rooms in the maternity ward are served by two 6 ton units, one of which is damaged beyond repair. The demonstration project will be to install 6 tons of solar powered air conditioning in place of the damaged unit, and provide training to Ministry of Health personnel operation and maintenance of the unit. This demonstration project will test the feasibility of retro-fitting solar assisted cooling units on existing buildings.

The Marine Research Station near Aguadulce is under construction. On-land fish and shrimp culture tanks are being built and will be used as laboratories for developing methods for increasing yields from existing and future sea culture operations. Two private shrimp culture operations now exist, and the Directorate of Aquaculture is preparing an application for a $30.0 million IDB loan to be used in expanding private shrimp culture operations. The shrimp are packaged, frozen and shipped to the U.S. The Directorate of Aquaculture plans to build a small office and laboratory on the site of the Research Station. The design for the building is now being prepared with construction scheduled to be completed by November 1, 1979. The design will call for installation of a solar assisted air conditioning unit to cool the laboratory, and will include the necessary duct work and roof strength to permit easy installation of solar powered air-conditioning. This unit will be provided under the project. This demonstration project will test the adaptablity of this conversion technology to new installations.

The two solar airconditioning demonstrations will cost approximately $75,000 which will be wholly financed by IRHE. Final design, equipment procurement, installation, start-

up and training of IRHE, Ministry of Health and DINAAC personnel will be provided by a contractor. IRHE will assign its solar projects engineer to work with the contractor in all aspects of his work. Once in operation, the Ministry of Health and DINAAC will be responsible for routine operation, data collection and maintenance of the demonstration projects. IRHE will be responsible for correcting any non-routine problems with the systems. At the end of this contract, the consultant will provide a preliminary evaluation of the performance and reliability of the systems through analyses of the data collected by IRHE and the benefitting GOP institutions.

Virtually the same technology with somewhat less efficiency, can be used for refrigeration and production of ice. When successfully demonstrated, it could be applied to such uses as airconditioning of public and private buildings; aircooling and refrigeration of storage plants for fresh fruits and vegetables; ice making for storage and packing of perishables such as fish, beef, and milk (perhaps through cooperatives); and even in commercial establishments which sell perishables. Table IV summarizes the number and type of possible sites for replication of this activity.

(b) Solar Hot Water Heating. Hot water is used in government, commercial and industrial buildings and operations and by most middle and upper class families in Panama. Table V summarizes actual and potential users of hot water.

High ambient air temperatures throughout the country help to provide potable water that is cool or lukewarm through piped water systems. Although it may be a necessity for certain government and industrial users, hot water is not a top priority for most lower income families. They have a preference for hot water, but the high costs associated with its production effectively preclude them from benefitting from this important domestic need. If these costs can be lowered, hot water adoption by lower income families can be expected to increase.

Table IV

NUMBER OF POTENTIAL SITES FOR SOLAR POWERED COOLING

TYPE OF INSTALLATION	NUMBER OF INSTALLATIONS	APPLICATION
Hospitals & (1) Health Clinics	58 - Hospitals 62 - Health Centers with bed 529 - Health Centers without beds, sub-centers and health posts	Central Air Conditioning
Rural (2) Fish Cooperatives	18 - Small rural cooperatives now operating	Refrigeration Ice Making
Vegetable (3) Cold Storage	3 - Major sites run by IMA with over 50 tons of refrigeration (David, Chitré and Panama City)	Refrigeration
Rural Fruit (4) Processing Plants	2 - With over 25 tons of refrigeration	Refrigeration
Building Central (5) Air Conditioning	Over 50 in Panama City with over 50 tons of central air conditioning	Air conditioning

(1) Estadísticas de Salud, 1977, Ministerio de Salud Serie A Septiembre
(2) Data from Ministry of Comercio e Industrias, See Apendix C for location of major activity.
(3) Data from (IMA), Instituto de Mercadeo Agropecuario
(4) & (5) Data compiled on visits and from best estimates.

Table V

POTENTIAL SITES FOR REPLICATION OF SOLAR HOT WATER HEATING

SECTOR	POTENTIAL	LOCATION
HEALTH	58 Hospitals 62 Health Centers 529 Health Centers without beds 225 Sub-Centers and Health Posts (under construction)	Throughout
COMMERCIAL	Laundries Hotels Restaurants	Large Cities Tourist Areas
GOVERNMENT and EDUCATION	Schools Government Buildings	In cities, rural areas & where meals are served
MILITARY	Meal Preparation, clothes Washing & Central hot water for personal uses & housing	Military Bases & Training Centers.
RESIDENTIAL	220,000 Houses had running water systems in 1970 (70% of total)	Total Country
INDUSTRIAL	Food canning and Processing, Beverages, Rendering, Sugar, etc.	Cities

Hot water is essential to the efficient operations of hospitals, and health centers and subcenters. Most of the health installations in rural areas do not have hot water. Under the project, five solar assisted hot water heaters will be installed in Ministry of Health facilities in different parts of the country. The hospitals at Ustupo (San Blas Islands), El Real and La Palma (both in the Darién jungle) do not have functioning hot water systems. At Ustupo and El Real the hospital was built without a hot water system; and at La Palma, the electric hot water system hasn't functioned for over a year and is now probably beyond repair. Demonstrations will be carried out at these hospitals and at a health center soon to be constructed in San Miguelito (a largely poor urban community physically contiguous with Panama City) and at the Castillero Hospital in Chitré (in the Azuero Península). The physical dispersion of these sites and the varying climatic and ambient air conditions should allow for a reasonable demonstration of the technology and for an adequate test of the feasibility of this type of solar energy application.

A contractor will be hired to provide final designs for all five installations, supply all needed equipment, completely install one system with IRHE personnel and train hospital or health center personnel in maintenance of the systems, including preparation of an operation and maintenance manual. Once in operation, Ministry of Health maintenance personnel will maintain the systems, make routine repairs, and collect data on system operation. IRHE will be responsible for correcting any non-routine problems. Near the end of his contract, the consultant will provide a preliminary evaluation of the performance and reliability of the systems based on data collected by MOH personnel. The cost of the five demonstration projects is estimated at $50,000 which will be wholly financed by IRHE.

(c) Photovoltaic Cells. Photovoltaic conversion technology converts sunlight directly into electricity through semiconductors. The

technology is quite sophisticated, but very reliable and easy to maintain. Although the price of photo cells are coming down rapidly, the cost of large generation facilities is still prohibitive. At present, economically feasible applications are limited to satellites, signaling equipment (e.g., navigation aids, repeaters, buoys) and drip irrigation systems in remote areas. Despite its limited uses at present, the flexibility (i.e., large potential number of uses) of photovoltaics justifies testing the adaptability of this technology in Panama. Over the long run, it is likely to find many uses here given Panama's high level of solar radiation.

The technology will be tested in an education related application. Schools in remote areas typically suffer from lack of effective communications with other areas of the country. Radio based education programs, such as the one in Nicaragua and others, have been supported by AID in an effort to overcome the effects of this isolation and as a vehicle for introducing new and improved curricula. Radios are also used by isolated schools for such purposes as ordering supplies, arranging for medical care, and scheduling visits of Ministry of Education regional supervisors and specialists and testing personnel. Eventually they come to serve as a communications link for the entire community.

In order to improve communications with the "outside world" for a group of isolated schools in isolated mountain villages of Veraguas province, the Ministry of Education, with UNICEF assistance, initiated a program in 1978 to provide them with low wattage single side band (SSB) radio transceivers. The communities benefitting from this program are among the poorest in the country. Even with these radios, communications are still not up to par. Lack of local electric systems, hilly terrain, and low power limit radio coverage. Messages, when they do get out, often require repetition by intermediaries to arrive at their destination. A repeater is needed to enable all these stations to achieve adequate coverage and UNICEF has agreed to provide the funds for its purchase. The site selected

for installation of the repeater is Virotal Hill (elev. 1,200 meters) in the District of Las Palmas, Veraguas Province. The nearest electric line is more than 25 kilometers away.

Under the project, a 120 watt photo cell array will be installed to provide the necessary energy for the repeater. IRHE will contract for the purchase and installation of the unit once the repeater is in place. A teacher from a nearby school will be responsible for periodic inspection and maintenance of the system. When system malfunctioning is reported by the schools, IRHE's project manager will be responsible for repairs. The cost of the demonstration project is estimated at $10,000 which will be completely financed by IRHE.

(3) Bio-Gas. A somewhat more experimental alternative energy source is the production of gas through decomposition of organic matter in the absence of oxygen (anaerobic digestion). The gas produced is a mix of methane (54-70%), carbon dioxide (27-45%) and small amounts of hydrogen, nitrogen, carbon monoxide, oxygen and hydrogen sulfide. The technology is proven, but great care is required to efficiently produce and use the gas.

The principal product, methane, in its pure form, will efficiently run an internal combustion engine and has been successfully used to power automobiles. The bio-gas produced by a carefully tended and well operated digester can be used for cooking and lighting and other uses for which natural gas is ordinarily used. The sludge (decomposed material) when dried can be used as a soil builder, and animal or fish feed.

The main requisites for successful operation of methane-generation system are acceptance by potential users, ability to use the gas when produced, sufficient demand for the gas, availability of sufficient raw material to meet the production requirement, and adequate maintenance and operational control.[1/]

1/ National Academy of Sciences, Methane Generation from Human, Animal and Agricultural Wastes, p.11.

A wide range of organic matter can be used to generate methane. These include crop wastes, human and animal excreta, waste and byproducts from agroindustries, forest litter and wastes from aquatic growth. Due to this wide variety of organic matter with potential for methane generation and the great variety of potential on-farm uses - cooking, lighting, water pumping, generation of electricity, milk cooling, etc. - a test of this alternative energy source will be carried out under the project. Two sites have been selected and a different use of the gas will be demonstrated at each site.

(a) Water Pumping. The Manuel Celestino González Asentamiento (agrarian reform farm) at La Colorada near Santiago consists of 13 poor families that make their livelihood mainly from raising swine for the National Directorate of Aquaculture (DINAAC). The Directorate arranges for the sale of piglets to communities and individuals building fish ponds with DINAAC assistance. Under the DINAAC fish culture program, swine manure provides a substrate which provides a nutrient for algae that grow in the pond. The algae are eaten by the fish which are in turn eaten by the community. The pigs are sold when they reach maturity.

The asentamiento has approximately 280 pigs at different stages of maturity. It also has its own fishpond. Water for the pond comes from rainfall run-off but there is not a sufficient supply of gravity flow water to maintain the pond in production for more than 6-8 months a year. The asentamiento has a small gasoline-powered water pump which it has used to provide water for the fishpond during the dry season. However they claim gasoline is too expensive and are not using the pump. Even when the fish pond is in use, they find it difficult to maintain the right level of nutrients for the algae given their large pig manure production.

A demonstration project will be carried out at this asentamiento to produce gas for pumping water. The Bio-Digester will also help the asentamiento to better regulate the flow of nutrients to the pond. Further-

more, it will allow DINAAC to test the feasibility of using sludge (which can be dried, transported and stored) as a nutrient. If successful, this would permit raising of fish by individuals and groups who do not wish to raise pigs and would provide for the possible sale of sludge by the asentamiento. Finally, the sludge, when dried will be used by the asentamiento as a soil builder in its agricultural activities (raising food crops for self consumption).

The demonstration project will consist of the design, construction and operation of an anaerobic digester, fencing for the bio-digester, modification of the gasoline engine to use gas and finally initiation of the water pumping. IRHE will purchase all needed materials with counterpart funds and will provide technical assistance to the asentamiento. This assistance will include supervising construction and start-up of the bio-digester and the pumping operation. The asentamiento will provide all labor for construction of the digester. A consultant will be hired to assist IRHE in all aspects of project design and implementation.

The project will cost an estimated $10,000. The consultant will be financed by AID. The cost of his services are estimated at $30,000. This will include a 2-3 month internship for IRHE's bio-gas project manager in the U.S. and consulting services in Panama on this and other bio-gas demonstration projects. The consultant will also carry out a preliminary evaluation of the demonstration projects he assists in implementing.

(b) Gas for Cooking and Water Heating. The second bio-gas demonstration will be located at a school in Caimito (Panama Province), the Instituto José Reyes Vasquez. The school is a "production" school for grades 7-9. AID is financing this type of school under Loan 525-V-043. When that loan is completed, there will be a total of 169 schools of this type in rural areas.

The school has 100 boarding students and 200 additional non-boarding students. It pro-

duces agricultural crops, livestock, poultry and pigs. Boarding students pay five dollars per month for meals and lodging. This fee does not cover the operating expenses of the school. One of the operating expenses is the cost of bottled gas for cooking. Two hundred pounds of gas are used each month at a cost to the school of $40. The school's pigs, chickens, and cattle produce animal wastes capable of producing 1,100 cubic feet per day of bio-gas. Under the demonstration project, a bio-digester will be constructed to turn these wastes into gas, and the residual sludge will be used as a feed supplement. In addition, the sludge will be used to culture algae. The algae will be dried and also be used as feed supplement for the school livestock. In addition, the gas will be utilized to provide hot water from a conventional gas-fueled water heater for food preparation and personal hygiene.

While the bio-digester will not have a favorable economic return given the present (subsidized) cost of gas, the value of building and managing a bio-digester should be a good educational experience for the students at the Instituto. It may also serve as a laboratory for further experimentation with the system and the eventual adoption of gas for other on-farm uses which have a higher rate of return.

The demonstration project will cost an estimated $10,000, which will be completely funded by IRHE.

e. Master Plan for Alternative Energy Sources.

(1) Energy Assessment. An energy assessment will be carried out as a first step in developing the Master Plan for Alternative Energy Sources. This assessment will consist of three interrelated elements:

(a) Energy Needs. The assessment will attempt to define and project Panama's energy uses, especially in rural areas. These uses include energy for agriculture, rural industry, domestic and community uses and transportation. Table VI gives examples of specific uses of energy in rural areas.

TABLE VI

RURAL ENERGY USES 1/

Agriculture	Rural Industry	Domestic	Quality of Life	Transportation
Food Production	Agricultural	Cooking	Drinking Water (Wells)	Motor Transport
Fertilizer	Village Craft	Cooling	Food Preservation	Inland
Training		Refrigeration	Medicine	Fluvial
Harvesting			Communications	Coastal
Irrigation			Lighting	
Farm Machinery			Education	
Pesticides			Rural Extension	

(b) Renewable Resources. The assessment will attempt to develop an estimate of renewable resources that could be used to supply the energy needed in rural and urban areas. A wealth of data on which to base this estimate is already available. The FAO has completed a seven volume study on forest resources. Stream flow data is available at IRHE as well as at the Panama Canal Company. Data on sun and wind resources will be made available through the Institutional Development Activity. Crop production data (from which to estimate agricultural wastes) and data on existence of farm animals (from which the potential of biogas production can be calculated) are available from the Ministry of Agricultural Development. Data from these and other sources will be used to identify possible alternative sources of energy for rural and urban uses and assess the degree to which they could be used in producing energy.

(c) Priorities for Development of Energy Sources Applications. From the above analysis of energy needs and resources priorities will be established for development of alternative energy sources and design and cost parameters

1/ Dalal, Vikram, Renewable Energy Strategies for Panama: A Preliminary Proposal, Institute of Energy Conversion, University of Delaware, January 22, 1979.

developed for appropriate conversion technology. The assessment will analyze the feasibility - technical, social, economic, environmental and administrative - of broader application of the highest priority conversion technologies identified.

(2) Master Plan. Based on data generated through the Institutional Development Activity, the Assessment, the feasibility studies and evaluations of the Demonstration Projects, the RESCU will develop a Master Plan for Alternative Energy Sources. This plan will identify specific projects to be carried out over a five year period and will be backed up by feasibility studies for the first year's projects. The Master Plan will also analyze the institutional mechanisms available for assisting private and public sector individuals and organizations to develop alternative energy applications. New mechanisms needed to provide technical and financial assistance to these parties will be identified. Areas where more research and demonstration are needed to test applications of alternative energy will also be discussed and additional demonstration projects proposed. Finally, the Master Plan will analyze GOP policy on energy and specifically recommend policies and incentives to promote the adoption of alternative energy sources.

Consultants will be contracted to develop the Master Plan jointly with IRHE personnel. Approximately 24 person months of consultant services will be required at an estimated cost of $150,000. IRHE will provide a minimum of two professionals who will work full time on the Plan. The Plan is expected to form the basis for an application by IRHE for a planned Alternative Energy Sources II Loan, presently planned for late FY 81 approval.

f. Evaluation. A joint evaluation will be carried out near the end of the project. The Panamanian Ministry of Planning and Economic Policy, IRHE, USAID/Panama and an independent outside consultant will participate in the evaluation process. The evaluation will cover:

(1) The technological, economic, and sociological feasibility of the demonstration projects implemented under the project.

(2) IRHE's technical and administrative performance.

(3) The impact of the project on economic and social development in the benefitting communities.

(4) The environmental effects of the demonstration projects.

(5) The status of GOP efforts to develop the institutional mechanisms and implement the policies recommended in the Master Plan.

(6) The effectiveness of other GOP efforts and programs aimed at developing alternative energy sources.

The evaluation team will utilize this PP, the preliminary evaluations of demonstration projects prepared by contractors and advisers, and the data contained in the energy assessment/Master Plan, as basic reference documents. This data will be supplemented by field visits and interviews as needed. Finally, special evaluations of some or all of the demonstration projects will be carried out in order to develop up to date information.

DS/EY will provide an evaluation specialist during the first year of the project to assist IRHE to develop an evaluation methodology. Near the end of the project IRHE will contract an independent outside consultant to assist in carrying out the evaluation. The cost of the consultant's services is estimated at $50,000 and will be financed by the Grant.

3. Input Summary The AID inputs will consist of a Grant of $825,000 and a DS/EY evaluation specialist for approximately a one month TDY. IRHE will provide $550,000 in cash and in-kind support. A summary project budget in the Final Plan (Section VI.A.) and a detailed budget is included in Annex G.

III. PROJECT ANALYSES

A. AID Strategy and Relation to Other AID-Funded Projects

1. AID Strategy in Panama. AID assistance to Panama supports a broad range of activities designed to improve incomes and living conditions for the rural poor. Sector programs in health and education are being complemented by more finely focussed efforts to improve the functioning of cooperatives; strengthen marketing channels for grains and vegetables; develop local governments as development agents; create the institutional capacity to plan and carry out integrated rural development and watershed management programs; strengthen the employment generating and service delivery capacity of selected rural growth and service centers; and construct and maintain access roads. These programs focus mainly on the Pacific side communities in the Central and Western regions (target area) - an area which contains 45% of the country's population including the vast majority of the project's target group.

   The impact and replicability of these projects, indeed, at times simply reaching project outputs, is limited by inavailability or high cost of energy. Under the rural health loan, for example, kerosene powered refrigerators had to be purchased from Sweden due to unavailability or unreliable delivery of other energy sources (electicity and gas). Yuca and onion drying facilities built during the "cheap energy" era have had to close over the last few years as the present high cost of energy has made their operation uneconomical, limiting the potential demand for these relatively labor intensive small farmer crops.

   The Mission has recently submitted a CDSS to AID/W which outlines a gradual shift from USAID/Panama's present emphasis on rural development to a program which would focus on the country's emerging poverty group - the urban poor. Under this strategy, employment generation would become a principal focus of new programs, with continued efforts in human resources development, environment and energy also receiving attention. Introduction of appropriate technology will be key to achieving success in the last few rural development programs, which will be carried out during the 1980's, as well as to the second generation problems that will increasingly form the focus for AID assisted programs.

   Energy was identified in the CDSS as one of Panama's principal development problems. Efforts to develop alternative energy sources will foster orderly social and economic development, and directly or indirectly enhance the effectiveness of all AID programs - present and future - in Panama.

2. Relation to Other AID-Funded Programs. Several Missions of Latin America are planning energy projects. One of these, a ROCAP project now under development with ICAITI will provide services that Panama could take advantage of. The project activities have not yet been determined, but assistance to Central American Governments in improving energy documentation systems and in developing more efficient use of, or alternatives to firewood are likely candidates. As noted in the Project Description, IRHE may take advantage of the assistance offered in energy documentation systems and firewood utilization. IRHE would be willing to share references from the documentation center to be developed under the project with its Central American neighbors if the ROCAP project moves ahead as planned.

3. GOP Strategy for Development of Alternative Energy Sources. The present high priority accorded to hydroelectric energy systems development has not yet carried over into a defined high priority for development of alternative energy sources. GOP decision makers are aware that development of alternative sources is necessary, but unconvinced that they are feasible. Several small but significant steps have recently been taken to assist in assessing feasibility. IRHE has created the Office of Alternative Energy Sources and charged it with developing alternative sources and applications in rural areas. The isolated energy systems formerly run through IRHE's operations department have recently been lodged in a new Directorate of Isolated Energy Systems. Both offices will be expanded over the coming years. To the extent that they can demonstrate the feasibility of alternative sources, a concomitant shift in priorities can be expected.

   As IRHE is an autonomous agency with an established track record in attracting capital from international sources, a high GOP priority for development of alternative energy sources can be expected to translate itself into action. IRHE does not have to compete for funds on the same basis as GOP ministries. It can directly negotiate financing for feasible programs. Thus, there are virtually no impediments, on the planning level or operationally to the development of alternative energy sources other than demonstration of their technical and economic feasibility. The project is designed to address these questions of feasibility.

B. Technical Analysis

1. Scope. For each demonstration project that requires construction the technical analysis covers:

a. Summary Description and Appropriateness of the Conversion Technology.

b. Operation and Maintenance of the Demonstration Project.

c. Role of Contractors.

d. Replicability of the Conversion Technologies Demonstrated.

In addition, the potential for replicability of technologies for which feasibility studies will be prepared is discussed.

As previously stated, the technologies selected for the demonstration projects are all known and they all work. Operation and maintenance requirements are minimal and within the capability of the IRHE, and cooperating institutions and groups to operate and maintain. The role of the contractors varies depending on the nature of the project and implementation difficulties anticipated. In the case of the Yaviza electric plant, solar air conditioning and photovoltaics, the contractor will be responsible for installation and testing of the system. In the case of hot water, he will install one of the five units and IRHE will install the other four. In the case of bio-gas, the contractor will provide advice on system installation and testing, with IRHE and the communities doing the installation.

A detailed discussion of technical specifications, appropriateness, operation and maintenance and role of contractors is included in Annex H.6. Some potential applications of the conversion technologies are discussed in the Project Description (Chapter II). The remainder of this section provides additional information on the potential demand for the alternative energy technologies that will be further studied and demonstrated under the project, and describes some possible channels that individuals, groups, and private and public sector institutions can use to obtain assistance in adopting the technology.

2. Adoption of Technologies for which Feasibility Studies will be Prepared.

a. Micro Hydros. IRHE continually receives requests from communities, private sector organizations and other GOP institutions for assistance in obtaining electricity. Some 60 applications for electricity from communities are still pending. Upon receipt of applications, IRHE sends out an engineer to do a preliminary analysis of the demand for electricity and

the possibilities for hydro generation. Up till now communities of less than 60 families have not been considered feasible sites for extensions of the national grid or development of small scale isolated systems. These communities, and individual enterprises (private farms, asentamientos, cooperatives, etc.) which can be efficiently served by small scale hydro plants form the targets for feasibility studies. IRHE conservatively estimates that at least 500 sites could be found and served through micro hydros.

Under the project, the applications now in hand will be evaluated as possible sites. Also, requests which were received previously but on which no action has been taken due to apparent low demand (i.e., communities of less than 60 families) will be re-evaluated. Feasibility studies for micro hydros will be prepared for those sites where potential hydro resources exist for serving the needs of the community or enterprise. If this effort is insufficient to produce the target of 40 sites set under the program (a highly unlikely event), IRHE will initiate a campaign to identify additional sites by contacting those agricultural sector agencies (IDLAP, Agricultural Development Bank (BDA), MIDA's National Directorate of Agro-Industries) to assist them in identifying additional sites from among their clients. Preference will be given to low income communities and enterprises owned by lower income families (asentamientos and cooperatives).

For those sites where technical, social and economic feasibility is confirmed, there are several channels through which assistance in financing and managing small hydro systems can be obtained. Financing may be available through the upcoming Applied Agricultural Research Project; the Cooperative structure (which AID is helping to strengthen under Loan 525-T-041); the BDA (which is receiving IDB assistance for investment credits to small and medium sized farms); the Municipal Development Fund (FODEM) which is receiving AID assistance under Loan 525-T-044; IRHE's own resources; and the follow-on loan planned for FY 81 obligation. IRHE will take responsibility for management of the systems and will, in accordance with established practice, employ local residents for jobs created through the program. The planning, construction and management of these systems will be run through IRHE's Isolated Systems Office.

b. Utilization of Agricultural Wastes. Development of working systems that utilize agricultural wastes will

ix

depend to a large extent on sufficient supplies of suitable raw materials that have chemical and dryness characteristics that permit their efficient use as fuel. A recent report on organic wastes in Panama 1/ estimated the following yearly production of dry processing wastes from the country's 44 public and private grains and coffee mills and 7 sugar mills:

Rice:	29,000 metric tons
Sugar:	627,000 metric tons
Coffee:	17,500 metric tons

Most of the sugar wastes are now used as fuel by the sugar mills. The report also estimated that roughly 10% of the weight of beets, carrot and pineapple production would provide dry material suitable for fuel if the products were processed. Of these products, a small percentage of the country's pineapple production is now processed (for juice, crushed, slices, and chunk).

IRHE's own analysis of the potential wastes from rice and sugar are somewhat lower than the above (19,400 tons of rice hulls and 88,600 tons of bagasses after sugar mill usage is considered 2/), but still provide evidence of a potentially large source of fuel. IRHE found that the state-owned sugar mills now pay around $100,000/year for removal of the bagasse, and medium size rice mills pay $5,000-$7,000 per year for removal of rice hulls. This latter figure would indicate a total cost to the approximately 40 rice mills in the country of about $250,000/year for removal of rice hulls. IRHE believes that the mill owners would make the raw materials available to anyone wishing to remove them at no cost. With no cost fuel available, the Georgia Tech team believes that utilization of these materials to produce energy would be an economically feasible operation.

Applications which utilize these resources to produce energy will be designed under the project. Depending on the application, funds for development of working systems may be available from private sources (e.g., rice millers, rice growers cooperatives); public

1/ Bern, Samuel, Reclicaje de Residuos Orgánicos en Panamá (1978).

2/ Trip Report written by Eng. Teresa Bryson of IRHE (April 1979).

institutions such as IMA (Loan 525-T-042), the Municipal Development Fund (Loan 525-T-044), or the Agricultural Development Bank (reflows from Loan 525-T-041 and IDB funds). Funds could also be made available through the planned FY 81 Alternative Energy Sources II Loan Project if capital does not become available in the meantime from the above or other sources. The RESCU will provide technical assistance in implementing projects it judges feasible.

3. Demonstration Projects. Through the project, RESCU will gain the experience necessary to enable it to provide assistance to the GOP and the private sector in replicating the technologies demonstrated and in adapting them to new sources and applications. The RESCU expects to respond to requests for assistance in all the areas discussed below and will continue, throughout the project implementation, to seek additional sites for introducing alternative energy sources and applications.

   a. Electric Generating Plants which Utilize Waste Wood. Approximately 40 of the 58 isolated systems which IRHE owns or manages are located in areas where this conversion technology could be applied. In addition, there are many more communities (some of them on islands) where the technology might be appropriate that do not currently have electric systems. As noted above, IRHE presently has applications from 60 communities for electric energy, some of which might be able to use this technology. When IRHE gains experience with and confidence in the technology, and if the economic feasibility proves to be as positive as the economic analysis indicates, these communities could offer significant opportunities for replication. IRHE itself or the individual communities, with IRHE technical advice and training services, might undertake these projects. Financing could come from the planned follow-on AID loan, bank loans to community groups, FODEM loans to municipalities or juntas locales 1/, or possibly from supplier's or Ex-Im Bank credits to IRHE. In addition, given the projected cost savings, GOP or IRHE financing might be possible despite other heavy commitments.

   b. Solar Air Conditioning. It is just plain hot in Panama and air conditioning, in the workplace at least, is rapidly becoming a necessity. The area of highest

---

1/ The governing board of a corregimiento - the smallest GOP political subdivision similar in size and function to a county, township or city ward.

intensity of solar radiation in Panama stretches from just east of Panama City through the Pacific Coast region as far west as Veraguas Province. This area contains well over half of the country's population and a majority of its major government installations, and industrial and commercial activities. Most new buildings in the area except for houses, are being constructed with air conditioning systems. These buildings are of a type that can utilize solar assisted air conditioning units. Hotels, banks and commercial establishments are being squeezed by the high cost of air conditioning and are asking IRHE for help. Older buildings are being converted from window units to central systems despite the high cost involved.

The specific target for replicability is the large number of government buildings that currently use window conditioners and those facilities that will be designed and built over the coming years. A conservative estimate would be that 200 Government facilities could be built with or converted to solar assisted air conditioning over the next five years. On new large installations the technologies now available are different from those being demonstrated under the project. They include passive systems (use of more appropriate building materials, better site orientation, etc.) as well as active systems. The required increment in capital cost would be a small percentage of the total value of construction and could be financed by its inclusion in the investment budget. When new buildings are constructed or remodeled using loans (a large percentage are financed this way) it is expected that lending institutions (including AID) would agree with this use of funds, if the payback period showed it to be a good investment. For the private sector, access to normal sources of financing (earnings, loans, etc.) would enable the technology to be replicated.

c. Solar Hot Water Heating. The technology that will be demonstrated under the project is suitable for commercial, industrial, residential and government use. An informal IRHE survey of industries in Panama City indicates that the water temperature required for such operations as soft drink and beer manufacturing, milk pasteurizing and hotels can be reached through solar water heating. Immediate use by these establishments can be expected when the technology is demonstrated.

Cheaper systems for home use are being tested throughout the world. These systems involve such storage media as rocks and building walls for heated water. When fully tested, materials and installation costs

could come down to a few hundred dollars (compared to the present cost of a few thousand) for a small home. At that point, use of solar hot water systems by low income families would become quite feasible. The experience gained by IRHE in installing and testing the systems demonstrated under the project will provide the experience necessary to test and evaluate new technologies as they become available.

Financing for such systems could be supplied through many of the same sources mentioned above: retained earnings or loans for industrial and commercial establishments; Government investment budget for GOP installations; and mortgage financing for home buyers. IRHE will seek the participation of the country's major low income housing developer - the Ministry of Housing - in evaluating cheaper systems for low income houses.

d. Photovoltaics. Possibilities for replication of this technology will be limited for the immediate future due to its present high cost. However, technological advances have reduced the cost per one KW of installed capacity from about $80,000 a few years ago to $15,000-$20,000 at present. The state of the art is improving rapidly and costs of $7,000-$8,000/KW are now projected for the early 1980's. By contrast, comparable costs are about $200-$300/KW for diesel units, $1,000-$4,000 for hydro plants and $2,000-$3,500 for wood fired boilers. When operating costs and inflation are taken into account, a price of $4,000/KW would make this technology competitive with these others for most uses, especially in countries, like Panama, with excellent solar regimes. Over the long run, photovoltaics will probably be a principal source of energy for Panama, and it is vital that IRHE begin gaining experience with utilizing this technology.

e. Bio-Gas. The possibilities for replication of bio-gas production units are indeed large. There are 115 production schools completed or planned for completion by the end of this project. There are approximately 150 asentamientos and cooperatives scattered around the country. These include approximately 30 producers coops who are affiliates of the Federation of Agricultural Cooperatives (COAGRO). Most of these affiliates raise animals or produce agricultural products whose wastes would decompose in a bio-digester. In addition, there are several hundred large private farms and some 25 government installations (state dairy and pig farms, experimental farms) that might be possible sites for replication. While the

technology would be more complicated and costly, eventual production of bio-gas from rural municipal sewage systems (most of which now use Imhoff tanks for sewage treatment) might be feasible.

Financing for bio-digestion units, once proven feasible, might be available from the Agricultural Development Bank or commercial sources. IRHE will consider possible extension of technical and financial assistance for inclusion in the planned follow-on loan, if these other sources are not willing to lend for this purpose.

C. Economic Analysis Summary

The Economic Analysis carried out for the project (Annex H.7) discusses the economic benefits of the project and examines the economic feasibility of the demonstration projects. In 1978, seventy three percent of export earnings[1] went to pay for oil imports. This percentage seems certain to rise in the short run given recent increases in crude oil prices and the stagnant growth in the export sector. If the trend cannot be reversed, the inability to use export earnings to purchase goods and services other than oil will certainly retard Panama's economic growth.

IRHE consumes approximately 10% of this oil. A significant reduction in its oil consumption would have a strong positive impact on the country's economy. Over 900,000 gallons (1%) of IRHE's total consumption of more than 90 million gallons (1977) is used by IRHE's 34 isolated systems, at a total yearly cost of $500,000 (1979 prices). Whereas consumption of oil for plants connected to the national grid has decreased due to the recent introduction of two new large hydro plants, consumption by the isolated systems is increasing.[2] The isolated sites are precisely those for which the project will attempt to identify and develop alternative sources of power.

1/ Excluding export of services to the Canal Zone.

2/ 880,672 gallons in 1976; 913,312 gallons in 1978.

Over time the renewable energy power systems are expected to replace worn-out equipment using fossil fuels to generate electricity, e.g., diesel. Asuming no-cost fuels, and the same 1979 demand level, once all the diesel plants have been replaced with the renewable energy power systems, a yearly savings of $500,000 (1979 prices) for oil purchases will be realized.

In addition to the savings generated this effort would provide a number of indirect and nonquantifiable benefits which have positive social and economic effects. These are discussed in the Social Soundness Analysis (Annex H.8).

In analyzing the economic returns of the demonstration projects, only two (the Yaviza electric plant and photovoltaic cells) are clear winners economically. While the others are less expensive than the traditional systems, there is not as great a difference as in the above cases. Extreme conservatism has been followed in designing and costing the demonstration projects and they are all highly sensitive to decreased investment costs and increases in the cost of power from traditional sources. Top of the line equipment has been selected to ensure technical feasibility and some of the sites selected are not ideal for demonstrating economic viability as they are already served by reasonably efficient energy systems. This is illustrated by the fact that the two most isolated sites (Yaviza and Virotal Hill) are also the demonstration projects which have the greatest economic feasibility. The analysis concludes that any of the conversion technologies is feasible depending on the site and the other considerations.

D. Social Soundness Summary

The Social Soundness Analysis (Annex H.8) describes the project target group in general terms, assesses the project's socio cultural feasibility and discusses the benefits of the proposed energy conversion technologies for the rural poor. The analysis demonstrates that community groups and GOP institutions that will have a role in carrying out the project have been involved in project development. Officials of other GOP institutions (Ministry of Education, Ministry of Health and MIDA's National Directorate of Aquaculture) who have successfully worked with the same community groups before, have served as IRHE's communications link. These institutions will participate in implementing the project and help to ensure continued community participation. Care has been exercised in selecting cooperating community groups that are interested in carrying out a demonstration project. Those selected are also known to IRHE, the Mission and the cooperating GOP institutions as hard working people who sincerely desire to better

their situation. They are judged capable of operating and maintaining the demonstration projects.

Due to the limited number of activities in which community participation is required (three demonstration projects) and to the limited scope of the project, direct target group benefits will be somewhat limited. The Social Soundness Analysis describes a variety of organized groups (asentamientos, cooperatives, local governments, production schools) and lists a large number of potential benefits that could be realized by these groups under this project and the follow-on-loan. Potential benefits for individual target group members may be limited by low credit availability.

IRHE is aware of the need to continue making contact with low income groups and helping to devise the energy conversion technologies best suited to their needs. The RESCU, supported by IRHE's policy to give priority to assisting these groups, intends to continue the process initiated during project development (described in Annex H.8) of seeking out potential low income users of its services and offering to assist them. This will help to ensure adoption of alternative energy sources that in turn can lead to real benefits for the project's target group.

E. Administrative Feasibility Summary

IRHE is a large and efficient, autonomous government agency with 4,200 employees and an operating budget of over $90.0 million in 1979. In general, it has adequate capability to carry out the project. The administrative analysis carried out during project development (see Annex H.9) concluded that some additional personnel would be needed to ensure successful implementation of the project. These personnel have been included in the hiring plan discussed in the Project Description (Chapter II), and IRHE has provided assurances that it will assign adequate personnel to the project. The administrative analysis also indicates some possible overlap between the project's Master Plan Activity and the functions of a newly created National Energy Commission. Appropriate Conditions Precedent and Covenants have been included in the draft authorization (Annex D) to call the GOP's attention to these matters.

F. Environmental Concerns

The Initial Environmental Examination (IEE) for the Alternative Energy Sources Project recommended that the project be given a Negative Determination, thus requiring no further environmental review. A Negative Determination (Annex F) was approved by the DAA on April 20, 1979.

When all the project's components were analyzed for their potential effects on Panama's natural and human environment, it was found that the project's institution building activities would cause no direct environmental impacts and that the project's demonstration project activities would cause only minor local adverse effects on Panama's natural resource base (such as small localized reductions in air quality), and that such impacts would be mitigated through careful project monitoring and evaluation. Furthermore, the creation of reliable energy sources for Panama's rural areas would most likely reduce the need for deforestation for firewood purposes.

The demonstration project's impacts on the human environment were determined to be quite positive because such projects would increase employment, increase income, reduce energy costs and create better living conditions through the provision of reliable sources of energy.

An attachment has been added to the IEE (Annex F) which discusses the environmental impact of activities which are different from those described in the PID.

IV. IMPLEMENTATION ARRANGEMENTS

A. Financial Plan

1. Budget Summary

Activity	AID	($000) GOP	TOTAL
Inst. Development:			
a. Staff Development:	50		50
Increased Operational Costs		190	190
Subtotal	50	190	240
b. Information Generation and Dissemination:			
i. Sun & Wind Measurement	20	25	45
ii. Documentation Center		5	5
iii. Newsletter		10	10
iv. Course	25		25
Subtotal	45	40	85
Activity Total	95	230	325
Feasibility Studies:			
a. Agricultural Wastes	100		100
b. Micro-Hydros	75	50	125
Activity Total	175	50	225
Demonstration Projects:			
a. Bio-Mass:			
Yaviza Plant Construction	269	110	379
Technical Assistance/Trng.	56		56
1st Year Operation		15	15
Subtotal	325	125	450
b. Solar Energy:			
i. Hot Water Heating		40	40
ii. Solar Cooling		75	75
iii. Photovoltaic		10	10
Subtotal		125	125

c. Bio-gas:			
i. La Colorada		10	10
ii. Instituto José R. Vásquez		10	10
iii. Tech. Assist	30		30
Subtotal	30	20	50
Activity Total	355	270	625
Assessment/Master Plan	150		150
Evaluation	50		50
TOTAL	825	550	1,375

2. Recurrent Costs

The recurrent costs of the project for IRHE will amount to an estimated $150,000/year, which includes the increased cost of RESCU's larger staff, continuation of information generation and dissemination activities, and maintenance of the photovoltaic installation. This will be offset by cost savings on the Yaviza plant estimated at $30,000/yr. The recurrent costs are an insignificant percentage of IRHE's operating budget.

The Ministry of Health (MOH), DINAAC, the Caimito production School, and the Asentamiento at La Colorada will all incur added operating and maintenance costs on the demonstration projects from which they benefit. Yearly additional costs are estimated at $1,010 for the MOH, $120 for DINAAC and $100 each for the Production School and the Asentamiento. These costs are expected to be more than offset by cash savings and other benefits resulting from the demonstration projects. Here again, the recurrent costs are insignificant and within the ability of these organization to bear.

B. Implementation Plan

Shortly after signature of the agreement, IRHE intends to issue two procurement documents. An RFP will request proposals for: the Yaviza plant, two feasibility studies, and consultant services in bio-gas production and development of the Master Plan. An IFB will request bids on installation of solar hot water and air conditioning systems and photovoltaic cells, and supply of sun and wind measurement equipment. Responders will be asked to offer their services on any or all tasks of interest. This will lead to a maximum of 8 contracts for a total estimated value of $820,000. Training actions will be

arranged as course selections are made. Procurement of consultant services for the course in solar heating and cooling and project evaluation will be initiated in the 2nd year of implementation. The procurement actions required are not difficult (although evaluation of proposals and bids will require some time). RESCU staff and IRHE's contract officer should have no difficulty carrying them out in a timely fashion.

Key implementation events are:

June 29, 1979	- Sign Project Agreement
July 15, 1979	- Issue RFP and IFB
September 15, 1979	- Receipt of Proposals/Bids
September 29, 1979	- Meet all conditions Precedent and complete evaluation of bids. Sign contracts for procurements requested through IFB.
October 15, 1979	- Complete evaluation of Proposals
October 30, 1979	- Sign contracts for procurements requested through RFP.
November 30, 1979	- Evaluation methodology completed
June 30, 1979	- Plan for energy plantation submitted to AID.
July 31, 1979	- RFP issued for course in solar heating and cooling, and evaluation services. 1st year evaluation completed.
October 31, 1980	- All demonstration projects in operation. RESCU professional staff now a minimum of 10. Contracts signed for course and evaluation.
December 31, 1980	- Preliminary evaluations of demonstration projects completed
June 30, 1981	- Master Plan delivered and project activities completed, except for evaluation.
September 30, 1981	- Project Activities completed.

AID project monitoring will be accomplished by the project team mentioned in the Summary Section. However, the Mission may obtain the services of an energy officer during project implementation, at which point monitoring responsibility for the project will shift to the energy officer.

C. Evaluation Plan

Final evaluation of the project is discussed in the Project Description (Section II.B.2.f.). A joint progress evaluation will be carried out at the end of the first year of evaluation. If imple-

mentation proceeds according to the timetable presented above, additional yearly progress evaluations would not be necessary. If needed, additional yearly progress evaluations will be scheduled by the Mission and IRHE.

D. Conditions, Covenants and Negotiating Status.

The few minor conditions and covenants considered necessary by the Mission have been included in the draft authorization. There are no substantive issues that need to be resolved prior to signature of a Project Agreement.

E. Source/Origin Waiver for Training Services.

Several institutions in Latin America - ICAITI in Guatemala, for example - are potential sites for the training courses described in Annex H.1. Training in a Latin American country would permit non-English speaking IRHE personnel to take advantage of training opportunities and contribute to the achievement of the project purpose. The Mission hereby requests a source/origin waiver to permit training in Code 941 countries. The Draft Authorization (Annex D) includes language to this effect.

AID 1020-28 (7-71)
SUPPLEMENT I

PROJECT DESIGN SUMMARY
LOGICAL FRAMEWORK

(INSTRUCTION: THIS IS AN OPTIONAL FORM WHICH CAN BE USED AS AN AID TO ORGANIZING DATA FOR THE PAR REPORT. IT NEED NOT BE RETAINED OR SUBMITTED.)

Life of Project:
From FY _____ to FY _____
Total U.S. Funding _____
Date Prepared: _____

PAGE 1

Project Title & Number: ALTERNATIVE RENEWABLE ENERGY SOURCES (525-0207)

NARRATIVE SUMMARY	OBJECTIVELY VERIFIABLE INDICATORS	MEANS OF VERIFICATION	IMPORTANT ASSUMPTIONS
Program or Sector Goal: The broader objective to which this project contributes: To improve the standard of living for low-income families and support Panama's economic development.	Measures of Goal Achievement: Reduction in oil purchases resulting in increased private sector profits and GOP revenues available for economic and social development programs. Decreased energy costs and/or higher disposable incomes for rural poor. Increased profits for asentamientos and cooperatives; initiation of new productive activities which use alternative energy technologies.	IRHE calculations Project evaluation Data from Dept. of Census & Statistics.	Assumptions for achieving goal targets: Price of oil continues rise. Efficiency of alternative energy capture and transmission mechanisms continues to increase. Energy produces from renewable sources has important non-quantifiable social and economic benefits. Panama is not hit by another economic recession.
PURPOSE: Improve IRHE capability to identify, analyze, develop, and disseminate information on renewable energy sources and their applications, with emphasis on rural areas.	Operating budget of Renewable Energy Office (RESCU) increased to $200,000/year. RESCU staffed with 12 professionals skilled in alternative energy applications. Collaborative relationships with public and private sector agencies developed. 50 additional applications identified and resources mobilized.	IRHE data. Project Evaluation	Continued high level support from IRHE management. Support from newly formed Energy Commission

AID 1020-28 (7-71)
SUPPLEMENT 1

PROJECT DESIGN SUMMARY
LOGICAL FRAMEWORK

Life of Project:
From FY _____ to FY _____
Total U.S. Funding _____
Date Prepared: _____

Project Title & Number: ALTERNATIVE ENERGY SOURCES (525-0207)

NARRATIVE SUMMARY	OBJECTIVELY VERIFIABLE INDICATORS	MEANS OF VERIFICATION	IMPORTANT ASSUMPTIONS
Outputs:	**Magnitude of Outputs:**		**Assumptions for achieving outputs:**
RESCU staff trained in alternative energy sources development.	4 internships for project managers 15 training courses attended.	Project records	Timely inputs
Alternative Energy Sources information and dissemination capability operational.	Alternative Energy Documentation Center equipped with up to-date reference file, periodicals, and books on alternative energy sources. Newsletter on Alternative Energy Sources being distributed on a quantity basis to a minimum of 500 individuals and organizations. Minimum of 3 courses and seminars completed on alternative energy for interested private and public sector employees sponsored by IRHE. Complete set of updated information on solar radiation and wind direction and velocity available through IRHE. Data being published yearly.	Project records	
6 demonstration projects and 2 feasibility studies of alternative energy applications successfully carried out.	Biomass, direct solar conversion and biogas applications completed and functioning effectively. Data available on technical, economic, and social feasibility of micro-hydro and agricultural waste applications.	Project evaluation	

AID 1020-28 (7-71)
SUPPLEMENT I

PROJECT DESIGN SUMMARY
LOGICAL FRAMEWORK

Life of Project:
From FY _____ to FY _____
Total U.S. Funding _____
Date Prepared: _____

Project Title & Number: ALTERNATIVE ENERGY SOURCES (525-0207)

NARRATIVE SUMMARY	OBJECTIVELY VERIFIABLE INDICATORS	MEANS OF VERIFICATION	IMPORTANT ASSUMPTIONS
Master plan for alternative energy sources completed.	Plan (a) identifies projects to be carried out between 1981 and 1986 including needed technical and financial assistance; (b) analyses institutional mechanisms for developing alternative energy applications; (c) proposes additional demonstration projects; and (d) recomends GOP policies and incentives to promote adoption of alternative energy sources.	Project evaluation.	
INPUTS	($000)		
	AID / GOP / TOTAL		
Institutional Development	95 / 230 / 325		DS/EY Energy Evaluation Specialist when needed.
Feasibility Studies	175 / 50 / 225		
Demonstration Projects	355 / 270 / 625		
Master Plan/Evaluation	200 / 0 / 200		
TOTAL	825 / 550 / 1,375		

5C(1) - COUNTRY CHECKLIST

Listed below are, first, statutory criteria applicable generally to FAA funds, and then criteria applicable to individual fund sources: Development Assistance and Security Supporting Assistance funds.

A. GENERAL CRITERIA FOR COUNTRY

1. FAA Sec. 116. Can it be demonstrated that contemplated assistance will directly benefit the needy? If not, has the Department of State determined that this government has engaged in consistent pattern of gross violations of internationally recognized human rights?	Yes.
2. FAA Sec. 481. Has it been determined that the government of recipient country has failed to take adequate steps to prevent narcotics drugs and other controlled substances (as defined by the Comprehensive Drug Abuse Prevention and Control Act of 1970) produced or processed, in whole or in part, in such country, or transported through such country, from being sold illegally within the jurisdiction of such country to U.S. Government personnel or their dependents, or from entering the U.S. unlawfully?	No. The Government of Panama is actively cooperating with U.S. and international agencies in the control of illicit drugs and narcotics traffic.
3. FAA Sec. 620(b). If assistance is to a government, has the Secretary of State determined that it is not controlled by the international Communist movement?	Yes, it has been so determined.
4. FAA Sec. 620(c). If assistance is to government, is the government liable as debtor or unconditional guarantor on any debt to a U.S. citizen for goods or services furnished or ordered where (a) such citizen has exhausted available legal remedies and (b) debt is not denied or contested by such government?	The GOP is not known to be indebted under any of these circumstances to any U.S. citizen for goods and services furnished or ordered.
5. FAA Sec. 620(e) (1). If assistance is to a government, has it (including government agencies or subdivisions) taken any action which has the effect of nationalizing, expropriating, or otherwise seizing ownership or control of property of U.S. citizens or entities beneficially owned by them without taking steps to discharge its obligations toward such citizens or entities?	No.

A

6. FAA Sec. 620(a), 620(f); App. Sec. 107, 114. Is recipient country a Communist country? Will assistance be provided to the Socialist Republic of Vietnam, Cambodia, Laos, Cuba, Uganda, Mozambique, or Angola?	No.
7. FAA Sec. 620(i). Is recipient country in any way involved in (a) subversion of, or military aggression against, the United States or any country receiving U.S. assistance, or (b) the planning of such subversion or aggression?	No.
8. FAA Sec. 620(j). Has the country permitted, or failed to take adequate measures to prevent, the damage or destruction, by mob action, of U.S. property?	Adequate measures have been taken to protect U.S. property.
9. FAA Sec. 620(l). If the country has failed to institute the investment guaranty program for the specific risks of expropriation, inconvertibility or confiscation, has the AID Administrator within the past year considered denying assistance to such government for this reason?	U.S. - Panama agreement relating to investment guarantees entered into force March 8, 1962.
10. FAA Sec. 620(o); Fishermen's Protective Act, Sec. 5. If country has seized, or imposed any penalty or sanction against, any U.S. fishing activities in international waters,	One vessel was seized in early 1974.
a. has any deduction required by Fishermen's Protective Act been made?	No.
b. has complete denial of assistance been considered by AID Administrator?	Such a denial was considered by A.I.D. Administrator and deemed not in the U.S. interest.
11. FAA Sec. 620(q); App. Sec. 503. (a) Is the government of the recipient country in default on interest or principal of any AID loan to the country? (b) Is country in default exceeding one year on interest or principal on U.S. loan under program for which App. Act appropriates funds, unless debt was earlier disputed, or appropriate steps taken to cure default?	(a) No. (b) No.
12. FAA Sec. 620(s). "If contemplated assistance is development loan (including Alliance loan) or security supporting assistance, has the Administrator taken into account the percentage of the country's budget which is for military expenditures, the amount of foreign exchange spent on military equipment and the amount spent for the purchase of sophisticated weapons systems?" (An affirmative answer may refer to the record of the taking into account, e.g.: "Yes as reported in annual report on implementation of Sec. 620(s)." This report is prepared at the time of approval by the Administrator of the Operational Year Budget.	Yes, as reported in annual report on implementation of Sec. 620(s).

Upward changes in the Sec. 620(s) factors occuring in the course of the year, of sufficient significance to indicate that an affirmative answer might need review, should still be reported, but the statutory checklist will not normally be the preferred vehicle to do so.)

13. FAA Sec. 620(t). Has the country severed diplomatic relations with the United States? If so, have they been resumed and have new bilateral assistance agreements been negotiated and entered into since such resumption? — No.

14. FAA Sec. 620(u). What is the payment status of the country's U.N. obligations? If the country is in arrears, were such arrearages taken into account by the AID Administrator in determining the current AID Operational Year Budget? — Panama is not delinquent with respect to dues, assessments, or other obligations to the U.S. for the purposes of Article 19 of the Charter.

15. FAA Sec. 620A. Has the country granted sanctuary from prosecution to any individual or group which has committed an act of international terrorism? — No.

16. FAA Sec. 666. Does the country object, on basis of race, religion, national origin or sex, to the presence of any officer or employee of the U.S. there to carry out economic development program under FAA? — No.

17. FAA Sec. 669, 670. *Has the country, after August 3, 1977, delivered or received nuclear enrichment or reprocessing equipment, materials, or technology, without specified arrangements or safeguards? Has it detonated a nuclear device after August 3, 1977 although not a "nuclear-weapon State" under the nonproliferation treaty?* — No.

18. FAA Sec. 901. Has the country denied its citizens the right or opportunity to emigrate? — No.

B. FUNDING CRITERIA FOR COUNTRY

1. Development Assistance Country Criteria — Yes.

a. FAA Sec. 102(c), (d). Have criteria been established, and taken into account, to assess commitment and progress of country in effectively involving the poor in development, on such indexes as: (1) small-farm labor intensive agriculture, (2) reduced infant mortality, (3) population growth, (4) equality of income distribution, and (5) unemployment.

b. FAA Sec. 104(d)(1). *If appropriate, is this development (including Sahel) activity designed to build motivation for smaller families in programs such as education in and out of school, nutrition, disease control, maternal and child health services, agricultural production, rural development, and assistance to urban poor?*

No.

c. FAA Sec. 201(b)(5), (7) & (8); Sec. 208; 211(a)(4), (7). Describe extent to which country is:

(1) Making appropriate efforts to increase food production and improve means for food storage and distribution.

The GOP is implementing a broad range of agricultural programs, including farm credit, land development & resettlement schemes, & improved food distribution and storage.

(2) Creating a favorable climate for foreign and domestic private enterprise and investment.

Panama's Banking Law of 1970, the use of the U.S. Dollar as legal tender, and the complete freedom of international payments and exchange transactions combine to create a favorable climate for foreign and domestic private enterprise and investment.

(3) Increasing the public's role in the developmental process.

The GOP continues to encourage grass roots participation in the development process. For example, it has strengthened local governments involvement in determining national priorities, policies, & programs; encouraged local initiative thru the establishment of community committees in health & education; and actively promoted the the development of cooperatives.

(4) (a) Allocating available budgetary resources to development.

(b) Diverting such resources for unnecessary military expenditure and intervention in affairs of other free and independent nations.

(4) (a) The Mission has concluded that development goals and programs in the 1976-1980 National Development Plan for economic and social development are reasonable.

(b) Panama's military expenditures continue to reprsent a small percentage of the national budget. Panama has not intervened in the affairs of other free and independent nations.

(5) Making economic, social, and political reforms such as tax collection improvements and changes in land tenure arrangements, and making progress toward respect for the rule of law, freedom of expression and of the press, and recognizing the importance of individual freedom, initiative, and private enterprise.

In recent years, GOP has effected tax reforms to significantly increase public revenues, provided public land for group farming schemes; and has attempted to maintain an open dialogue with the private sector.

(6) Otherwise responding to the vital economic, political, and social concerns of its people, and demonstrating a clear determination to take effective self-help measures.

The Government is clearly responding in an effective manner to the development needs of its people, particularly in the areas of agriculture, health, education, and housing.

d. FAA Sec. 201(b), 211(a). Is the country among the 20 countries in which development assistance loans may be made in this fiscal year, or among the 40 in which development assistance grants (other than for self-help projects) may be made?

Yes.

e. FAA Sec. 115. Will country be furnished, in same fiscal year, either security supporting assistance, or Middle East peace funds? If so, *has Congress specifically authorized such use of funds, or* is assistance for population programs, humanitarian aid through international organizations, or regional programs?

No.

B

2. Security Supporting Assistance Country Criteria

a. FAA Sec. 502B. Has the country engaged in a consistent pattern of gross violations of internationally recognized human rights? Is program in accordance with policy of this Section?

N/A

b. FAA Sec. 531. Is the Assistance to be furnished to a friendly country, organization, or body eligible to receive assistance?

N/A

c. FAA Sec. 533(c)(2). *Will assistance under the Southern African Special Requirements fund be provided to Mozambique, Angola, Tanzania, or Zambia? If so, has President determined (and reported to the Congress) that such assistance will further U.S. foreign policy interests?*

N/A

d. FAA Sec. 609. If commodities are to be granted so that sale proceeds will accrue to the recipient country, have Special Account (counterpart) arrangements been made?

N/A

e. App. Sec. 113. *Will security assistance be provided for the purpose of aiding directly the efforts of the government of such country to repress the legitimate rights of the population of such country contrary to the Universal Declaration of Human Rights?*

N/A

f. FAA Sec. 620B. *Will security supporting assistance be furnished to Argentina after September 30, 1978?*

5C(2) - PROJECT CHECKLIST

Listed below are, first, statutory criteria applicable generally to projects with FAA funds, and then project criteria applicable to individual fund sources: Development Assistance (with a sub-category for criteria applicable only to loans); and Security Supporting Assistance funds.

A. GENERAL CRITERIA FOR PROJECT.

1. App. Unnumbered; FAA Sec. 653(b); Sec. 671 (a) Describe how Committees on Appropriations of Senate and House have been or will be notified concerning the project; (b) is assistance within (Operational Year Budget) country or international organization allocation reported to Congress (or not more than $1 million over that figure	a) Formal notification has been sent to Congress advising of the inclusion of the Project in the FY 79 program. b) Yes.
2. FAA Sec. 611(a)(1). Prior to obligation in excess of $100,000, will there be (a) engineering, financial, and other plans necessary to carry out the assistance and (b) a reasonably firm estimate of the cost to the U.S. of the assistance?	Yes.
3. FAA Sec. 611(a)(2). If further legislative action is required within recipient country, what is basis for reasonable expectation that such action will be completed in time to permit orderly accomplishment of purpose of the assistance?	No further legislative action is required to accomplish the project purpose.
4. FAA Sec. 611(b); App. Sec. 101. If for water or water-related land resource construction, has project met the standards and criteria as per *the Principles and Standards for Planning Water and Related Land Resources dated October 25, 1973?*	Yes.
5. FAA Sec. 611(e). If project is capital assistance (e.g., construction), and all U.S. assistance for it will exceed $1 million, has Mission Director certified the country's capability effectively to maintain and utilize the project?	Yes.
6. FAA Sec. 209, 619. Is project susceptible of execution as part of regional or multilateral project? If so why is project not so executed? Information and conclusion whether assistance will encourage regional development programs. If assistance is for newly independent country, is it furnished through multilateral organizations or plans to the maximum extent appropriate?	This Project could not be executed as part of a regional or multi-regional project. Panama is not a newly independent country.

A

7. FAA Sec. 601(a); (and Sec. 201(f) for development loans). Information and conclusions whether project will encourage efforts of the country to: (a) increase the flow of international trade; (b) foster private initiative and competition; (c) encourage development and use of cooperatives, credit unions, and savings and loan associations; (d) discourage monopolistic practices; (e) improve technical efficiency of industry, agriculture and commerce; and (f) strengthen free labor unions.

The grant should aid directly all of the items mentioned with the exception of (f).

8. FAA Sec. 601(b). Information and conclusion on how project will encourage U.S. private trade and investment abroad and encourage private U.S. participation in foreign assistance programs (including use of private trade channels and the services of U.S. private enterprise).

All procurement, except for some minor training expenses will be of U.S. source and origin.

9. FAA Sec. 612(b); Sec. 636(h). Describe steps taken to assure that, to the maximum extent possible, the country is contributing local currencies to meet the cost of contractual and other services, and foreign currencies owned by the U.S. are utilized to meet the cost of contractual and other services.

Not applicable. The currency used in Panama is the U.S. Dollar, although it is denominated a "Balboa". There is no U.S. owned "local currency".

10. FAA Sec. 612(d). Does the U.S. own excess foreign currency and, if so, what arrangements have been made for its release?

Not applicable.

11. *ISA 14. Are any FAA funds for FY 78 being used in this Project to construct, operate, maintain, or supply fuel for, any nuclear powerplant under an agreement for cooperation between the United States and any other country?*

No.

B. FUNDING CRITERIA FOR PROJECT

1. Development Assistance Project Criteria

a. FAA Sec. 102(c); Sec. 111; Sec. 281a. Extent to which activity will (a) effectively involve the poor in development, by extending access to economy at local level, increasing labor-intensive production, spreading investment out from cities to small towns and rural areas; and (b) help develop cooperatives, especially by technical assistance, to assist rural and urban poor to help themselves toward better life, and otherwise encourage democratic private and local governmental institutions?

The Project is designed to improve the standard of living for low-income families and to further the Country's economic development. It is expected that the alternative energy technologies demonstrated will be of special interest to cooperatives.

b. FAA Sec. 103, 103A, 104, 105, 106, 107. Is assistance being made available: [include only applicable paragraph -- e.g., a, b, etc. -- which corresponds to source of funds used. If more than one fund source is used for project, include relevant paragraph for each fund source.]

(1) [103] for agriculture, rural development or nutrition; if so, extent to which activity is specifically designed to increase productivity and income of rural poor; [103A] if for agricultural research, is full account taken of needs of small farmers;

(2) [104] for population planning or health; if so, extent to which activity extends low-cost, integrated delivery systems to provide health and family planning services, especially to rural areas and poor;

(3) [105] for education, public administration, or human resources development; if so, extent to which activity strengthens nonformal education, makes formal education more relevant, especially for rural families and urban poor, or strengthens management capability of institutions enabling the poor to participate in development;

(4) [106] for technical assistance, energy, research, reconstruction, and selected development problems; if so, extent activity is:

(a) technical cooperation and development, especially with U.S. private and voluntary, or regional and international development, organizations;

(b) to help alleviate energy problem;

The project is designed to alleviate energy problems by development of a GOP capability to identify, analyze and develop alternative energy sources.

(c) research into, and evaluation of, economic development processes and techniques;

(d) reconstruction after natural or manmade disaster;

(e) for special development problem, and to enable proper utilization of earlier U.S. infrastructure, etc., assistance;

(f) for programs of urban development, especially small labor-intensive enterprises, marketing systems, and financial or other institutions to help urban poor participate in economic and social development.

(5) [107] by grants for coordinated private effort to develop and disseminate intermediate technologies appropriate for developing countries.

c. FAA Sec. 110(a); Sec. 208(e). Is the recipient country willing to contribute funds to the project, and in what manner has or will it provide assurances that it will provide at least 25% of the costs of the program, project, or activity with respect to which the assistance is to be furnished (or has the latter cost-sharing requirement been waived for a "relatively least-developed" country)?

The Government has agreed to provide a counterpart contribution in excess of 25% of total Project cost and has so stated in the letter of application.

d. FAA Sec. 110(b). Will grant capital assistance be disbursed for project over more than 3 years? If so, has justification satisfactory to Congress been made, and efforts for other financing, *or is the recipient country "relatively least developed"?*

No.

e. FAA Sec. 207; Sec. 113. Extent to which assistance reflects appropriate emphasis on; (1) encouraging development of democratic, economic, political, and social institutions; (2) self-help in meeting the country's food needs; (3) improving availability of trained worker-power in the country; (4) programs designed to meet the country's health needs; (5) other important areas of economic, political, and social development, including industry; free labor unions, cooperatives, and Voluntary Agencies; transportation and communication; planning and public administration; urban development, and modernization of existing laws; or (6) integrating women into the recipient country's national economy.

This project will contribute towards the achievement of objectives (1), (2), (3), (4), and (5).

f. FAA Sec. 281(b). Describe extent to which program recognizes the particular needs, desires, and capacities of the people of the country; utilizes the country's intellectual resources to encourage institutional development; and supports civic education and training in skills required for effective participation in governmental and political processes essential to self-government.

This project directly recognizes and utilizes the needs, desires and capacities of the population, the implementing agency and other public/private sector organizations to promote the country's overall social and economic development. This combination of efforts will strengthen the participatory process now evident in Panama's political development.

81

g. FAA Sec. 201(b)(2)-(4) and -(8); Sec. 201(e); Sec. 211(a)(1)-(3) and -(8). Does the activity give reasonable promise of contributing to the development: of economic resources, or to the increase of productive capacities and self-sustaining economic growth; or of educational or other institutions directed toward social progress? Is it related to and consistent with other development activities, and will it contribute to realizable long-range objectives? And does project paper provide information and conclusion on an activity's economic and technical soundness?	Yes.
h. FAA Sec. 201(b)(6); Sec. 211(a)(5), (6). Information and conclusion on possible effects of the assistance on U.S. economy, with special reference to areas of substantial labor surplus, and extent to which U.S. commodities and assistance are furnished in a manner consistent with improving or safeguarding the U.S. balance-of-payments position.	This Project will have no foreseeable adverse effects on the U.S. economic areas of labor surplus. Assistance will be furnished in a manner consistent with improving the U.S. balance of payments positon.
2. Development Assistance Project Criteria (Loans only)	
a. FAA Sec. 201(b)(1). Information and conclusion on availability of financing from other free-world sources, including private sources within U.S.	a) Financing for this activity from alternative sources is not available.
b. FAA Sec. 201(b)(2); 201(d). Information and conclusion on (1) capacity of the country to repay the loan, including reasonableness of repayment prospects, and (2) reasonableness and legality (under laws of country and U.S.) of lending and relending terms of the loan.	b) N/A
c. FAA Sec. 201(e). If loan is not made pursuant to a multilateral plan, and the amount of the loan exceeds $100,000, has country submitted to AID an application for such funds together with assurances to indicate that funds will be used in an economically and technically sound manner?	c) N/A
d. FAA Sec. 201(f). Does project paper describe how project will promote the country's economic development taking into account the country's human and material resources requirements and relationship between ultimate objectives of the project and overall economic development?	Yes.

e. FAA Sec. 202(a). Total amount of money under loan which is going directly to private enterprise, is going to intermediate credit institutions or other borrowers for use by private enterprise, is being used to finance imports from private sources, or is otherwise being used to finance procurements from private sources?	N/A
f. FAA Sec. 620(d). If assistance is for any productive enterprise which will compete in the U.S. with U.S. enterprise, is there an agreement by the recipient country to prevent export to the U.S. of more than 20% of the enterprise's annual production during the life of the loan?	Not applicable.
3. Project Criteria Solely for Security Supporting Assistance	
a. FAA Sec. 531. How will this assistance support promote economic or political stability?	Not applicable.
b. FAA Sec. 533(c)(1). *Will assistance under the Southern African Special Requirements Fund be used for military, guerrilla, or paramilitary activities?*	Not applicable.
4. Additional Criteria for Alliance for Progress	
[Note: Alliance for Progress projects should add the following two items to a project checklist.]	
a. FAA Sec. 251(b)(1), -(8). Does assistance take into account principles of the Act of Bogota and the Charter of Punta del Este; and to what extent will the activity contribute to the economic or political integration of Latin America?	(a) Yes, The Project will aid in the integration of a section of Panama into the mainstream of Panamanian economic and political life and will serve as a model for replication in other areas, both within Panama and in other Latin American countries.
b. FAA Sec. 251(b)(8); 251(h). For loans, has there been taken into account the effort made by recipient nation to repatriate capital invested in other countries by their own citizens? Is loan consistent with the findings and recommendations of the Inter-American Committee for the Alliance for Progress (now "CEPCIES," the Permanent Executive Committee of the OAS) in its annual review of national development activities?	(b) Not applicable.

PROJECT AUTHORIZATION AND REQUEST FOR ALLOTMENT OF FUNDS

PART II

Name of Country: Panama

Name of Project: Alternative Energy Sources

Number of Project: 525-0207

Pursuant to Part I, Chapter 1, Section 106 of the Foreign Assistance Act of 1961, as amended, I hereby authorize a Grant to the Republic of Panama, the "Cooperating Country" of not to exceed Eight Hundred Twenty Five Thousand United States Dollars ($825,000), the "Authorized Amount" to help in financing certain foreign exchange and local currency costs of goods and services required for the project hereinafter described. The project consists of improving the capability of the Water Resources and Electrification Institute (IRHE) to identify, analyze and develop renewable energy sources and applications in Panama. The entire amount of the A.I.D. financing herein authorized for the Project will be obligated when the Project Agreement is executed.

I hereby authorize the initiation of negotiation and execution of the Project Agreement by the officer to whom such authority has been delegated in accordance with A.I.D. regulations and Delegations of Authority subject to such allotment and Congressional notification procedures as are required and to the following essential terms, covenants and conditions together with such other terms and conditions as A.I.D. may deem appropriate:

a. Source and Origin of Goods and Services

Except for training, goods and services financed by A.I.D. under the Project shall have their source and origin in the Cooperating Country or in the United States except as A.I.D. may otherwise agree in writing. Training services shall have their source and origin in the Cooperating Country or in any country included in A.I.D. Geographic Code 941.

b. Conditions Precedent to Disbursement

(1) Prior to disbursement or the issuance of any commitment documents under the Project Agreement to finance sun and wind measurement equipment, the Grantee shall furnish, in form and substance satisfactory to A.I.D. a plan for placement and operation of the equipment and for utilization of the data collected.

(2) Prior to disbursement or issuance of any commitment document to finance consulting services for the Master Plan Activity, the Grantee shall furnish, in form and substance satisfactory to A.I.D., evidence that it will provide at least two qualified professionals to work with the consultants on a full time basis.

c. Covenants

The Cooperating Country shall covenant that, except as A.I.D. and the Cooperating Country may otherwise agree in writing, the Cooperating Country shall:

(1) Take necessary measures to ensure coordination between the activities carried out under the Project and those carried out by the National Energy Commission.

(2) Provide, by the end of the first year of Project implementation, a plan for the establishment, operation and maintenance of a forest reserve sufficiently large to ensure a continuous supply of wood or wood wastes for the woodfired electric plant to be built near Yaviza with Project funds.

TT PMCASS
RR RUWFZP
DE RUEHC #7811/01 1202107
ZNR UUUUU ZZH
P 292343Z MAY 79
FM SECSTATE WASHDC
TO AMEMBASSY PANAMA PRIORITY 5436
BT
UNCLAS STATE 117811

ANNEX E
Page 1 of 3

ACTION COPY
ACTION TAKEN HAN
DATE 5/10 INITIALS GRB

29 MAY 79
TOR: 2110
CN: 13631
ACTION: AID
INFO: DCM
CHRO

AIDAC

E.O. 12065N/A

TAGS:

BEST AVAILABLE COPY

SUBJECT: PID - ALTERNATIVE ENERGY SOURCES

REF: CHAPIN/ZALLMAN TELCON OF 4/27/79

OFF	ACT	INF
DIR		✓
D/DIR		
CONT		
ECON		
EX-O		
DP		
DR	✓	
ARD		
HRD		
OES		✓
RCO		
LMD		
AAG		
IIS		
RHUDC		
EMB		
C&R		

1. THE DAEC REVIEWED AND APPROVED THE SUBJECT PID ON APRIL 17, 1979. BECAUSE OF THE PIONEERING NATURE OF THE PROJECT AND THE LIKELIHOOD THAT IT WILL PROVIDE A MODEL FOR SIMILAR PROJECTS ELSEWHERE IN THE REGION, THE DECISION WAS MADE TO RETAIN FINAL PROJECT APPROVAL AUTHORITY IN WASHINGTON. MOREOVER, CONCERN WAS EXPRESSED THAT THE USUAL PROBLEMS ASSOCIATED WITH AN INNOVATIVE PROJECT SUCH AS THE ONE PROPOSED WILL BE COMPOUNDED BECAUSE THE PROJECT CONFRONTS A COMPLEX PROBLEM INVOLVING THE SELECTION OF ADVANCED ENERGY CONVERSION TECHNOLOGIES FROM AMONG VARIOUS ALTERNATIVES AND THEIR MODIFICATION TO FIT THE SOCIO-ECONOMIC CHARACTERISTICSOF A WIDE RANGE OF RURAL INHABITANTS. THE FOLLOWING SPECIFIC GUIDANCE IS PROVIDED TO ASSIST THE MISSION IN PREPARING THE PROJECT PAPER.

2. DEMONSTRATION PROJECTS:

-- A. ANALYSIS. THE DEMONSTRATION PROJECTS WILL BE SELECTED PRIOR TO AND IMPLEMENTED CONCURRENTLY WITH THE ENERGY ASSESSMENT. AS A RESULT, THERE IS A DANGER THAT THE PROJECTS SELECTED MAY NOT BE THE MOST BENEFICIAL GIVEN THE COUNTRY'S NEEDS AND POTENTIAL. TO REDUCE THIS POSSIBILITY, THE MISSION SHOULD CARRY OUT A SUFFICIENTLY DETAILED ANALYSIS FOR EACH PROJECT THAT DEMONSTRATES ITS FEASIBILITY ON TECHNICAL, ECONOMIC AND SOCIOLOGICAL GROUNDS AND ASSESSES THE APPLICABILITY OF THE TECHNOLOGY DEVELOPED IN THE PROJECT TO OTHER LOCATIONS IN THE COUNTRY. REGARDING THE SOCIAL ANALYSIS, THE MISSION SHOULD LOOK AT MORE THAN CENSUS DATA AS IMPLIED IN THE PID BECAUSE SUCCESSFUL IMPLEMENTATION WILL DEPEND ON HOW WELL THE DEMONSTRATION PROJECTS ARE TAILORED TO THE BROAD RANGE OF RURAL INDIVIDUALS AND GROUPS THAT WILL BE INVOLVED IN PROJECT OPERATIONS.

-- B. REPLICATION. THE PID STATES THAT IRHE INTENDS TO DEVELOP THE DEMONSTRATION PROJECTS THROUGH TECHNICAL ASSISTANCE CONTRACTS WITH U.S. INSTITUTIONS. IT FURTHER NOTES THAT THE CONTRACTORS WOULD TAKE FULL RESPONSIBILITY TO PRODUCE A FINAL PRODUCT, I.E., AN OPERATING SYSTEM.

MAY 30 1979

HOWEVER, THERE IS NO DISCUSSION OF THE METHODOLOGY TO BE FOLLOWED FOR REPLICATING SUCCESSFUL PROJECTS IN OTHER LOCATIONS. THE PP SHOULD DISCUSS HOW INFORMATION ON THE SUCCESSFUL PROJECTS WILL BE DISSEMINATED TO PEOPLE LIVING IN OTHER LOCATIONS WHERE THE PROJECTS WOULD BE APPLICABLE AND THE MECHANISM THAT WILL BE USED TO ASSIST THOSE PEOPLE WITH DEVELOPING THEIR OWN PROJECTS. GIVEN THE RAPIDLY CHANGING TECHNOLOGY IN THE ENERGY SECTOR THE MISSION SHOULD CONSIDER THE EXTENT TO WHICH AN IN-HOUSE CAPACITY OUGHT TO BE DEVELOPED IN IRHE VIS-A-VIS INCREASED INVOLVEMENT OF THE PRIVATE SECTOR.

-- C. INSTITUTIONAL CAPACITY. TO DATE, IRHE HAS SHOWN A STRONG BIAS TOWARDS THE DEVELOPMENT OF LARGE HYDRO-ELECTRIC PROJECTS. APPROXIMATELY DOLS. 200 MILLION HAS BEEN INVESTED IN SUCH PROJECTS SINCE 1974 AND PLANS CALL FOR AN ADDITIONAL DOLS. 714 MILLION TO BE INVESTED THROUGH 1980. THE DEVELOPMENT OF THESE PROJECTS DRAWS HEAVILY ON IRHE'S HUMAN AND FINANCIAL RESOURCES. IN VIEW OF THIS, THE PP SHOULD DISCUSS WHAT EFFECT THE HYDROELECTRIC PROGRAM WILL HAVE ON IRHE'S COMMITMENT TO THE DEMONSTRATION PROJECTS ULTIMATELY SELECTED FOR IMPLEMENTATION, AND ITS CAPACITY TO PLAN AND IMPLEMENT THOSE PROJECTS.

-- D. MAINTENANCE. DURING THE DAEC REVIEW, IT WAS NOTED THAT IRHE HAS NOT PROPERLY MAINTAINED ITS DIESEL GENERATORS LOCATED IN REMOTE AREAS. GIVEN THAT THE DEMONSTRATION PROJECTS ARE INTENDED FOR OPERATION IN REMOTE AREAS, THE PP

SHOULD DESCRIBE THE MEASURES THAT WILL BE TAKEN TO INSURE ADEQUATE MAINTENANCE OF THE DEMONSTRATION PROJECTS.

3. EVALUATION. THE PURPOSE OF THE DEMONSTRATION PROJECTS IS TO ACCESS THE FEASIBILITY OF SEVERAL ALTERNATIVE TECHNOLOGIES WHICH APPEAR TO HAVE PROMISE FOR FUTURE REPLICATION. IN ADDITION, THE PROJECT IS THE FIRST OF ITS KIND IN THE LAC BUREAU AND WILL BE USED AS AN EXAMPLE FOR FUTURE ENERGY PROJECTS. THEREFORE, THE MISSION SHOULD - - INCLUDE A STRONG EVALUATION COMPONENT WITHIN THE PROJECT, WHICH WILL PROVIDE EVIDENCE OF EFFECTIVENESS NOT ONLY ON TECHNICAL GROUNDS BUT WILL ALSO COVER SOCIO-ECONOMIC IMPACT.

4. PROJECT FUNDING. DURING THE INTENSIVE REVIEW, THE MISSION SHOULD CAREFULLY CONSIDER WHETHER ANY ADDITIONAL INPUTS MAY BE REQUIRED TO INSURE THE SUCCESSFUL ACHIEVEMENT OF PROJECT OBJECTIVES PARTICULARLY IN PROMOTING REPLICATION OF THE DEMONSTRATION PROJECTS. ANY INCREASE SHOULD BE FULLY JUSTIFIED IN THE PP.

5. RELATION TO OTHER PROJECTS. DURING THE DAEC REVIEW, IT WAS NOTED THAT OTHER PROJECTS ARE BEING DEVELOPED IN THE ENERGY SECTOR AND THAT IT WOULD BE NECESSARY TO

BEST AVAILABLE COPY

COORDINATE THEM IN ORDER TO ELIMINATE POTENTIAL GAPS AND OVERLAPS. A POTENTIAL GAP MENTIONED CONCERNS FIRE CO... THE PID IDENTIFIES FIREWOOD AS A MAJOR SOURCE OF ENERGY FOR THE RURAL POOR BUT IT DOES NOT INDICATE ANY PLANS FOR RATIONALIZING THE EXPLOITATION OF THIS SOURCE. DURING THE INTENSIVE REVIEW THE MISSION SHOULD CONSIDER ADOPTING A STRATEGY FOR DEVELOPMENT OF THE SOURCE IN THE CONTEXT OF BOTH THIS AND THE ROCAP FUELWOOD PROJECTS. IN ADDITION, THE PP SHOULD DISCUSS-THE RELATION BETWEEN THE PROPOSED PROJECT, THE ACTIVITIES OF A PVO NAMED GRUPO DE TECHNOLOGIA APROPIADA THAT IS WORKING WITH CEDECANI IN DEVELOPING ALTERNATIVE ENERGY SOURCES, THE PLANNED IDB LOAN FOR DEVELOPMENT OF SEVERAL LARGE HYDROELECTRIC PROJECTS, AND OTHER PRESENT AND PLANNED PROJECTS IN THE ENERGY SECTOR.

6. ALTERNATIVE ENERGY LOAN. THE PID IDENTIFIES THE ALTERNATIVE ENERGY LOAN AS A FOLLOW-ON TO THE DEMONSTRATION PROJECTS AND NOTES THAT-IT IS INTENDED FOR-FY 82 OR 83 FUNDING. TO INSURE THAT EXPERIENCE GAINED UNDER THE PROPOSED PROJECT IS FULLY INCORPORATED INTO THE DESIGN OF THE LOAN, AN EVALUATION OF THE PROJECT SHOULD BE COMPLETED BEFORE THE LOAN'S PROJECT DESIGN IS PREPARED. HOWEVER, THE PRESENT PROJECT MAY HAVE A LENGTHY IMPLEMENTATION PERIOD WHICH WILL DELAY THE POINT AT WHICH A MEANINGFUL

EVALUATION OF PROJECT RESULTS CAN OCCUR. THEREFORE, THE MISSION SHOULD CONSIDER DELAYING DEVELOPMENT OF THE LOAN UNTIL AT LEAST FY 81.

7. PROCUREMENT WAIVERS. THE PID NOTES THAT TRAINING ACTIVITIES-MAY TAKE PLACE IN LATIN AMERICAN COUNTRIES. IN VIEW OF THE CODE 000 SOURCE AND ORIGIN LIMITATION ON GRANT FINANCED PROCUREMENT THE MISSION SHOULD CONSIDER THE NEED FOR WAIVERS AND INCLUDE REQUESTS FOR ANY THAT ARE REQUIRED IN THE PP.

8. SUGGESTED TECHNICAL ASSISTANCE FOR PP DEVELOPMENT. GIVEN THE DIFFICULTY OF THE PROJECT, WE SUGGEST THAT THE MISSION'S PROJECT DEVELOPMENT COMMITTEE BE AUGMENTED BY THE FOLLOWING: (A) ENERGY CONVERSION ENGINEER; (B) ECONOMIST; AND (C) ANTHROPOLOGIST. DSWEN HAS AGREED TO PROVIDE DR. JAMES D. WISTFIELD TO FILL THE ENGINEERING POSITION FOR TWO WEEKS STARTING APRIL 22. WE UNDERSTAND THAT MR. BENJAMIN SEVEN FROM THE MISSION'S STAFF WILL FILL THE ECONOMIST POSITION. WE ALSO UNDERSTAND THAT A SCOPE OF WORK FOR THE PROJECT'S SOCIAL ANALYSIS WAS MUTUALLY AGREED TO BY NORMAN CHAPIN AND ERIC ZALLMAN IN REF AND THAT THE MISSION IS CONSIDERING THE NEED TO CONTRACT AN ANTHROPOLOGIST FROM EXTERNAL SOURCES TO CARRY OUT THE ANALYSIS.

9. JOJOBA BEANS. IF THE MISSION DECIDES TO CONSIDER JOJOBA BEANS AS ANOTHER DEMONSTRATION PROJECT, WE SUGGEST THAT CONTACT BE MADE WITH THE FOLLOWING INDIVIDUALS TO OBTAIN ADDITIONAL INFORMATION AND ASSISTANCE; MR. WILLIAM MILLER, DEPT. OF INTERIOR (BAI), ROOM 4656, CODE 320, 1951 CONSTITUTION AVE., N.W., WASHINGTON, D.C. 20245, TELE: 202 343-2696; AND MR. RAY NIGHTINGALE, ISTC/TO, ROOM 3019, NEOB, STOP 20, WASHINGTON, D.C., TELE: 703

DEPARTMENT OF STATE
AGENCY FOR INTERNATIONAL DEVELOPMENT
WASHINGTON, D.C. 20523

LAC/DR-IEE-79-20

ASSISTANT ADMINISTRATOR

ENVIRONMENTAL THRESHOLD DECISION

Location : Panama, R. P.

Project Title : Alternative Energy Sources - 525-0207

Funding : FY 1979 - $500,000

Life of Project: Two Years

Mission Recommendation:

Based on the Initial Environmental Examination, the Mission has concluded that the project will not have a significant effect on the human environment and therefore recommends a Negative Determination.

The Development Assistance Executive Committee of the Bureau for Latin America and the Caribbean has reviewed the Initial Environmental Examination for this project and concurs in the Mission's recommendation for a Negative Determination.

AA/LAC Decision:

Pursuant to the authority vested in the Assistant Administrator for Latin America and the Caribbean under Title 22, Part 216.4a, Environmental Procedures, and based upon the above recommendation, I hereby determine that the proposed project is not an action which will have a significant effect on the human environment, and therefore, is not an action for which an Environmental Impact Statement or an Environmental Assessment will be required.

Assistant Administrator for
Latin America and the Caribbean

Date

Clearances:
LAC/DR:Environmental Advisor:ROtto
DAEC Chairman:MBrown

INITIAL ENVIRONMENTAL EXAMINATION

Project Location: Panama, R. P.

Project Title: Alternative Energy Sources

Funding: FY 1979 $500,000

Life of Project: Two years 525-0201

IEE Prepared by: James E. Stanley Date: April 9, 1979

Environmental Action Recommended

This IEE has identified no significant negative impacts on the natural or human environment. Therefore, the Mission recommends the Project be given a Negative Determination.

Concurrence: R. E. Culbertson Date: 9 April 1979
Robert E. Culbertson
Mission Director

Assistant Administrator's Decision:

Signature: _____ Date: _____

V. INITIAL ENVIRONMENT EXAMINATION

One of the project's activities - institution building - should produce no impacts on Panama's physical and natural environment because of its general nature. The institution building activity includes short-term training for IRHE personnel in alternative energy sources and applications, and the preparation of feasibility studies, with AID-funded technical assistance, for mini and micro hydro systems. The Alternative Energy Master Plan will analyze Panama's energy needs, identify available renewable resources, assign priorities to and develop feasibility studies for projects to supply energy in rural areas from alternative (and renewable) sources.

Although these components will have no direct impact on the environment, they should produce some positive indirect impacts on the country's physical and natural resources by increasing the government's awareness of environmental concerns through participation in studies that will include environmental analyses of alternative energy systems development.

The project's second activity, the undertaking of three demonstration projects identified in the energy assessment, should produce only minor environmental impacts. These demonstration projects will be undertaken, initially, for research purposes only. They will be confined to small areas, carefully monitored, and evaluated, once in operation, for their environmental implications. Such controls should lead to prompt elimination or mitigation of any adverse environmental impacts, should they occur. Of the three demonstration projects preliminarily identified, only the pyrolysis and bio-digestion projects have a potential for causing slightly negative impacts through contamination of the local environment with small amounts of gases and smokes. However, such impacts will be limited to very small areas and should be mitigated through careful monitoring and project evaluation. In addition, end products of both these processes will be used to produce energy in areas where forests are often cut to provide firewood; and the sludge produced by the bio-digestion process will be used as fertilizer. Thus the positive impacts created by the use of the products of these processes should far out outweigh the processes' minor negative environmental impacts.

Since the above evaluation of each of the project's major components indicates that none of the proposed activities will have a significant impact on the physical or natural environment, the Mission recommends that project be given a Negative Determination, requiring no further environmental review.

ATTACHMENT TO IEE

Further analysis of the demonstration projects proposed at the PID stage rejected pyrolysis for several reasons. First of all, it was determined that local competence at the proposed pyrolysis site in Yaviza, Darien Province, could handle a much more sophisticated technology than pyrolysis. Secondly, low cost pyrolysis systems have not been regularly operated in the tropics and little experience exists for reference. Thirdly, the stability of pyrolitic oils and the corrosive effects of these oils have not been evaluated sufficiently to assure the success of their use as local fuels. Also, health hazards to people operating pyrolysis plants are not well known. Finally, a fairly extensive R + D effort would be needed to perfect the pyrolytic conversion technology. Such an effort is not contemplated in this project's design.

Therefore, a decision was made to substitute pyrolysis with a Bio-mass demonstration project. This project will involve the construction of a direct combustion steam boiler/turbo generator system which will use local wood waste from the area's 3 sawmills and 7 logging operations as well as harvested wood from a 3,000 ha. preserve. This preserve will be created under a concession from the Ministry of Agricultural Development's (MIDA) Directorate of Renewable Natural Resources (RENARE). RENARE will also provide guidance for this plantation in the development of appropriate plant materials and in plantation organization. The proposed generator system will be managed by IRHE.

This demonstration project's impacts on Panama's natural environment should be minor. Unavoidable adverse impacts on air and water quality may result from the actual construction of the plant; however, such impacts will be short term and effect only a very small area. Air quality near Yaviza may be effected when the system is in operation. However, such air quality impacts should be minor as the generator system proposed for this project will remove 95% of all smoke exhaust generated. The system's waste ashes will most likely be spread in nearby forested areas where they should cause no harm to soils or vegetation.

There is also a potential that the project would lead to local deforestation, erosion and loss of wildlife habitat. However, such an impact is highly unlikely because control of the 3000 ha. energy plantation by experienced RENARE personnel will ensure that trees will be cut at proper intervals and that harvested trees will be regularly replaced. In fact, the success of this demonstration project as a reliable energy source should diminish the amount of deforestation for firewood purposes in other areas.

This demonstration project's impact on the human environment of the Yaviza area should be quite positive. Currently, imported fuel will be displaced by wood at a cost savings of $30,000 a year. Other benefits include the creation of 6 local jobs, increased income and better living conditions due to a reliable source of electricity for the residents of Yaviza, Real de Santa María and Pinogana (population approximately 2,000).

DETAILED PROJECT BUDGET

Activity	Procurement	Cost ($ U.S.)		
		AID	GOP	TOTAL
1.a. Institutional Development:	(1) Training			
	-General Orientation Courses for seven new employees	14,000		14,000
	-Course in Energy Management Training for 2 Employees	20,000		20,000
	-Energy Manager Seminar	2,000		2,000
	-Developing and Controlling an Energy Management Program	2,000		2,000
	-Bio-mass Conversion (short Course)	2,000		2,000
	-Energy Conservation in Industrial Plants	2,000		2,000
	-Wind Energy Seminar	2,000		2,000
	-Courses/Seminars in Bio-mass Sources/Applications	6,000		6,000
	Sub-Total Training	50,000		50,000
	(2) Increased Operational Costs:			
	Systems Analyst (30P/M)		24,000	24,000
	Electrical Engineer (24P/M)		24,000	24,000
	Economist (24P/M)		16,800	16,800
	Combustion Engineer (24P/M)		24,000	24,000
	Mechanical Engineer (24P/M)		19,200	19,200
	Industrial Engineer (18P/M)		14,400	14,400
	Chemical Engineer (12P/M)		9,600	9,600
	Secretary (24P/M)		9,600	9,600
	Subtotal		141,600	141,600
	In Country Transportation		20,000	20,000
	Office supplies, materials and Equipment		15,000	15,000
	Misc.		13,400	13,400
	Subtotal		190,000	190,000
	Total Activity 1.a	50,000	190,000	240,000

1.b Information Generation & Dissemination	(1) Sun and Wind Measurement:			
	Equipment	15,000		15,000
	Computer Services	5,000		5,000
	Monitors (24P/M each)		24,000	24,000
	In Country transportation		1,000	1,000
	Sub-Total	20,000	25,000	45,000
	(2) Documentation Center			
	Librarian (1/2 time-24P/M)		4,800	4,800
	Materials, Office Supplies		200	200
	Subtotal		5,000	5,000
	(3). Newsletter start-up Costs			
	Editor (12P/M)		6,000	6,000
	Secretary (1/2 time 12P/M)		2,400	2,400
	Printing 1000 copies x10 editions x .10 copy		1,000	1,000
	Misc. Costs		600	600
	Sub-Total		10,000	10,000
	(4) Course on Solar Heating and air conditioning			
	Instructors (10P/D at 500/Day)	5,000		5,000
	Preparation of Course	10,000		10,000
	Special Usual Aids Prep.	5,000		5,000
	Travel/Per Diem	3,000		3,000
	Contingency	2,000		2,000
	Sub-Total	25,000		25,000
	Total Activity 1.b	45,000	40,000	85,000
	Total Institutional Development Activity	95,000	230,000	325,000
2. Feasibility Studies	(1) Agricultural Waste Utilization: Consulting services, estimated at total 13.3P/M, of Agricultural Waste Expert (3.3P/M), Combustion Engineer(5P/M) and Mechanical Engineer (5P/M)	100,000		100,000
	Total Agric. Waste Studies	100,000		100,000

(2) Micro Hydros:

Increased Operational Costs:			
2 Civil Engineers 24P/M each		38,400	38,400
Travel and Per Diem		6,600	6,600
Misc.		5,000	5,000
Consulting Services, estimated at 8P/M for small scale hydro systems engineer	75,000		75,000
Total Micro Hydro studies	75,000	50,000	125,000
Total Activity	175,000	50,000	225,000

3.a Bio-Mass	Yaviza Electric Plant:			
	1-120kW Elliot steam turbine generator 250p.s.i.g., single stage 4" H_g condensing,21 lbs. steam per kW	64,000		64,000
	1 - Steam Condenser (exhaust) for turbine		24,000	24,000
	1 - 75 HP Industrial Wood Fired Steam Boiler, rated 300 p.s.ig. working pressure complete w/feed water system	190,000		190,000
	1-Portable Wood Chipper & Trailer		15,000	15,000
	1 - Wood Dryer	10,000		10,000
	Installation Materials and Boiler Shed	5,000		5,000
	Transportation		6,000	6,000
	Installation & Misc.		65,000	65,000
	Sub-Total - Construction	269,000	110,000	379,000
	Internship for IRHE Project Mgr.	5,000		5,000
	Technical Assistance in final design, installation, testing and training of IRHE Staff (5P/M) and design of Energy Plantation(2P/M)	51,000		51,000
	Operational Costs		15,000	15,000
	Sub-Total Demo-Project	325,000	125,000	450,000
3.b Solar Demo Projects	(1)- Solar Air Conditioning - (a) Castillero Hospital			
	1 - 3 ton Cooler		4,000	4,000
	1 - 3 ton Cooling tower		600	600
	23 Flat Plate Collectors		7,820	7,820
	Shipping of above		3,045	3,045
	Hot Water Tank		250	250
	Travel (Contractor)		1,000	1,000
	Factory Installation help (15P/D)		3,000	3,000
	Collector Platform		1,000	1,000
	Plumbing & Electrical		1,000	1,000
	Contingency		2,000	2,000
	Final Design check		1,000	1,000
	Monitoring equipment & Instrumentation		2,500	2,500
	Sub-Total Construction		42,930	42,930

Training - Travel	1,000	1,000
personnel (10P/D)	2,500	2,500
Sub-Total Training	3,500	3,500
Total Demo Project	46,430	46,430
(b) Aguadulce Lab.Aquaculture Lab.		
1 - 3 ton Cooler	4,000	4,000
1 - 3 ton cooling tower	600	600
25 - Flat Plate Collectors	8,500	8,500
Shipping of above	3,195	3,195
Hot Water Tank	250	250
Interior Hot Water Tank	500	500
Cold Storage Tank	500	500
Factory Installation Help(10 P/D)	2,000	2,000
Collection Platform	500	500
Travel (Contractor)	1,000	1,000
Plumbing and Electrical	1,000	1,000
Final Design Check	1,000	1,000
Monitoring	2,000	2,000
Contingency	1,000	1,000
Sub-Total Construction	26,045	26,045
Training (7 P/D)	1,750	1,750
Misc. Contract Costs	775	775
Total Demo Proj.	28,570	28,570
Sub-Total Activity	75,000	75,000
2- Solar Hot Water Heating		
(a).3-60 Gallon Installations		
(Ustupo,Chitre,San Miguelito)		
12 Flat Plate Collectors	4,080	4,080
Shipping	900	900
3 Hot Water Tank	450	450
Intermediate Storage	225	225
Reinforcing (Plumbing and Insulation)	900	900
Monitoring and Control	900	900
Contingency	750	750
Sub-Total-3 Installations	8,205	8,205

(b)	1-60 gallon installation (El Real)		
	5 Flat Plate Collectors	1,700	1,700
	Shipping	375	375
	Hot Water Tank	150	150
	Intemediate Storage	75	75
	Reinforcing	350	350
	Monitoring and Control	300	300
	Contingency	300	300
	Sub-Total Installation	3,250	3,250
(c)	1-80 gallon installation (La Palma)		
	6 Flat Plate Collectors	2,040	2,040
	Shipping	450	450
	Hot Water Tank	200	200
	Intermediate Storage	75	75
	Reinforcing (Plumbing and Insulation)	350	350
	Monitoring and Control	500	500
	Contingency	360	360
	Sub-Total Installation	3,975	3,975
	Sub-Total Construction	15,430	15,430
(d)	Technical Assistance		
	Final Design (5P/D)	2,500	2,500
	Installation Assistance(1o/P/D)	5,000	5,000
	Installation of 1 system	4,000	4,000
	Operation & Maintenance Training (10P/D)	5,000	5,000
	Internship for IRHE Project Manager in U.S.	5,000	5,000
	Contingency	3,070	3,070
	Sub-Total Techn.Assistance	24,570	24,570
	Sub-Total Activity	40,000	40,000
(3)	Photovoltaic Installation		
	Solar Cell Array-150 watts	4,500	
	Heavy Duty Battery-20kWH	1,000	
	Shipping of Above	300	
	Installation Assistance(3P/D)	1,600	
	Miscellaneous	2,600	
	Total Contract Cost for Installation	10,000	10,000
	Total-Solar Demo Projects	125,000	125,000

3.c.Bio-Bio Gas Demo Projects	(1)- La Colorada		
	Mixing Tank: Capacity: 300/gal.	200	200
	Mixing Motor:	400	400
	Size: 2hp electric (electricity from external source)	100	100
	Mixing Propeller:		
	Sand Trap:		
	Construction: Wood and Corrugated metal Size:10' x 15'(includes labor)	250	250
	Excavation:		
	Quantity: 75 M^3 at 1.25/M^3	95	95
	Digester Vessel:		
	Material: Hypalon Volume: 2650 C.F. Area: 230 S.F. at .65/S.F. Thickness: 30 mil.	150	150
	Digester Roof Construction:	300	300
	Area: 460 S.F. at $0.65/S.F. (2 layers) Insulation: 6" rockwood; Area 230S.F. at $0.30/S.F.	70	70
	Circulation Pump	250	250
	Size:1/2 hp electric (electricity from external source)		
	Thermostat Control to Digester Cost plus installation	2,000	2,000
	Piping for System Galvanized Schedule 40 and PVC Schedule 40 (includesinstallation costs)	500	500
	800 Gal. gas storage tank	300	300
	Sump Pump Submersible Type Electric (electricity from external source)	600	600

Hot water System		
Hotwater Heater w/heating capacity 50 gal./hr.	200	200
Hotwater Storage tank w/capacity of 200 gal.	300	300
Instrumentation		
Temperature Indicator		
Digital, portable w/3 probes located in digester	300	300
pH meter		
Digital , portable w/digester vessel hookup	200	200
Additional Misc. Construction Costs	300	300
Lagoon to store sludge	50	50
Misc. Equipment to Convert the existing 3-1/2 hp Briggs and Stratton gasoline engine to utilize bio-gas	300	300
Fence and Misc. Costs	1,690	1,690
Sub-Total	8,555	8,555
Contingencies	690	690
Inflation	755	755
Sub-Total Demo.Project	10,000	10,000
(2) Amito Production School(Inst. Jose Reyes Vasquez)		
Mixing Tank		
Capacity: 300/gal.	200	200
Mixing Motor		
Size: 2 hp electric (electricity from external source)	400	400
Mixing Propeller	100	100
Sand Trap		
Construction: wood and corrugated metal		
Size: 10' x 15' (includes labor)	250	250

Excavation		
Quantity: $75M^3$ at $1.25/M^3$	95	95
Digester Vessel		
Material: Hypalon Volume; 2650 C.F. Area: 230 S.F. at .65/S.F. Thickness: 30 mil	150	150
Digester Roof Construction		
Area: 460S.F.at $0.65S.F. (2 layers)	300	300
Insulation:6"rockwood;Area 230 SF at $0.30/SF	70	70
Circulation Pump		
Size: 1/2 hp electric (electricity from external source)	250	250
Thermostat Control to digester		
Cost plus installation	2,000	2,000
Piping for System		
Galvanized Schedule 40 and PVC Schedule 40(includes installation costs)	500	500
800 Gal. Gas Storage Tank	300	300
Sump Pump		
Submersible Type Electric (electricity from external source)	600	600
Hot Water System		
Hot water Heater w/heating Capacity 50 gal./hr.	200	200
Hot water Storage tank w/capacity of 200 gal.	300	300
Instrumentation		
Temperature Indicator Digital, portable w/3 probes located in digester	300	300

	pH meter Digital, portable w/digester vessel hookup		200	200
	Additional Misc. Construction Costs		300	300
	Lagoon to store sludge		50	50
	Equipment to spread sludge		1,000	1,000
	Misc.Equipment to adapt existing stove to Bio-gas		250	250
	Fence around Bio-Digestor		540	540
	Sub-Total		8,355	8,355
	Contingencies		785	785
	Inflation		860	860
	Sub-Total Demo Project		10,000	10,000
	Sub-Total Construction of 2 Demo Projects		20,000	20,000
	Technical Assistance:			
	Bio-Digestor Adviser (3P/M)	21,000		21,000
	Internship in U.S. (2P/M)	9,000		9,000
	Sub-Total Tech Assistance	30,000		30,000
	Sub-Total-Bi-Gas-Demo Project	30,000	20,000	50,000
	Total Demonstration Projects	355,000	245,000	600,000
4. Energy Assessment/ Master Plan	Estimated at 20P/M time of Energy Policy Expert (3P/M), Solar Energy Expert (5P/M), Bio-Mass Expert (5P/M), Energy Economist (3P/M), Sociologist (2P/M), and short term specialists (2P/M)	150,000		150,000
	Total Energy Assessment / Master Plan	150,000		150,000

5.Evaluation	Estimated at 10P/M time of Evaluator (3P/M), Sociologist (1P/M), Energy Economist (3P/M) and short term specialists (3P/M)	50,000		50,000
	Total Evaluation	50,000		50,000
	TOTAL PROJECT	825,000	550,000	1,375,000

DETAILED DESCRIPTION OF INSTITUTIONAL DEVELOPMENT ACTIVITY

A. Training Plan

1. Training Modes

Training will be carried out through two modes. First, IRHE project managers for solar, bio-mass and bio-gas projects will be trained mainly through internships provided by contractors who are selected to carry out or advise IRHE in implementing the demonstration projects in these areas. The cost of these internships will be included in the consultants' contracts and is therefore not included in the training budget.

The second training mode will be short courses and seminars. These will be provided primarily for orientation of new employees of RESCU. IRHE receives a great amount of literature on course offerings direct from sponsors. In addition DS/EY periodically advises USAID/P on training opportunities. 1/ This information will be used as a basis for selection of appropriate training opportunities.

2. Training Subjects and Courses

IRHE plans to hire approximately seven additional professionals over the coming eighteen months. IRHE will attempt to arrange a general course in alternative energy sources for each of them. In addition, courses and seminars specific to the areas in which both new and present employees will be working will be arranged. At present, these courses are expected to include:

a. Course in Energy Management Training Program for Developing Countries

In September 1979 A.I.D./W is grant-funding 30 participants to attend an 8 week course to be held at S.U.N.Y. at Stony Brook. The course will be designed to lay out development parameters needed for a national energy planning scheme in developing countries. The Economist of RESCU has been nominated by DS/EY to attend the course. Should DS funds not be available to finance this course for RESCU's economist, $10,000 of Grant funds have been programmed for this purpose. The economist to be hired in 1980 will also attend this course if it is offered again at an appropriate time. Estimated cost for two attendees is $20,000.

---

1. See for example 78 Airgram A-454

b. Energy Manager Seminar

This seminar is scheduled to be held at the University of Wisconsin in 1979. The IRHE Office Chief of RESCU will attend this one week seminar to give him a broader perspective in the renewable energy field. Estimated cost: $2,000.

c. Developing and Controlling an Energy Management Program

This short-course will be conducted at New York University. The IRHE Economist scheduled to be hired in 1980 will attend this one week course during 1980 to improve his understanding of his role in the energy program operations. Estimated cost: $2,000.

d. Short-course on Bio-Mass Conversion

A one week training course will be arranged sometime in 1980 with M.I.T., Georgia Tech., Cornell, or a similar institution to disseminate information on Bio-Mass conversion technologies to the IRHE Combustion Engineer being hired in 1980. Estimated cost: $2,000.

e. Energy Conservation in Industrial Plants.

Several times each year the New York University holds a 3-5 day seminar on energy conservation. The IRHE Industrial Engineer hired in 1980 will attend this short course to become better aware of the existing situation and problems of energy conservation practices. This will improve IRHE's ability to respond to Government and private requests concerning industrial conservation of energy. Estimated cost: $2,000.

f. Wind Energy Seminar

IRHE intends to hire a Mechanical Engineer in 1980 to manage RESCU's wind energy programs. He will attend a one week seminar at the University of California in Berkley to gain a fuller understanding of present wind applications. Estimated cost: $2,000.

g. Other Courses (Not yet selected):

(1) General orientation courses for new employees: Estimated at $2,000 for each of seven new employees. Total: $14,000.

(2) Courses seminars in bio-mass sources and applications. Estimated at one man month. Total cost: $6,000.

B. Information Generation and Dissemination Activity

1. Sun and Wind Measurement. Data on solar radiation and wind direction and velocity are available on a limited basis at present. The Hydrometeorology Department of IRHE, the Directorate of Civil Aeronautics, several institutions in the Canal Zone, and private individuals and groups have some data on sun and wind intensity. However, these data are all collected for different purposes, are available for different time periods are kept in different formats and have been collected using different procedures through a variety of different kinds of measuring devices.

   In order to identify the areas in which conversion technologies based on sun and wind might be utilized, IRHE will need to systematically fill in gaps in the existing data, develop a standard format and units of measurement for existing data and data generated through this effort, and process and analyze all available data on sun and wind intensity. The results of this analysis will be put on maps with isograms representing the key data. Overlays will be prepared which indicate the best areas for solar and wind applications.

   Grant funds of $15,000 will finance the equipment needed for additional sun and wind measurements, and $5,000 will be provided for data processing services. Simple and inexpensive portable equipment will be purchased for measurement of solar and wind intensity and quality. IRHE will provide personnel to set up the measurement stations, collect data and format available data for processing. IRHE will also commence periodic publishing of the data and analysis for other public and private sectors agencies to use as a guide in making investment decisions on adoption of solar and wind conversion technologies. These counterpart costs are estimated at $25,000 over the life of the project.

2. Documentation Center. The emergence of energy as a key issue in development for all countries has been accompanied by a large increase in written materials on the subject. Books, periodicals, newspaper articles and audio-visual materials relating to alternative energy sources are being produced at an ever increasing rate. It is essential for IRHE personnel to keep abreast of new developments in the field. IRHE has already accumulated a large number of materials and is receiving many requests from the private sector and other GCP agencies for information. With limited

personnel and lack of a library system, only a few of the most urgent requests receive attention.

As part of the project, therefore, IRHE will develop an alternative energy documentation center for use of its own personnel and public and private sector personnel. The activity will include: obtaining subscriptions to periodicals and newspaper clipping services; purchase or acquisition of books on alternative energy sources and applications; cataloguing of already available and newly acquired materials; development for a reference file for documents known to IRHE but not available in the documentation center; organization of a physical space for the center; and monitoring the use of the materials available in the center.

This activity will be wholly financed by IRHE, and the costs are estimated at $5,000 over the life of the project. Some assistance in carrying out this activity may be provided by ICAITI under a ROCAP financed project now being developed.

3. Newsletter. As requests for information are received and use of the documentation center by non-IRHE personnel increases, IRHE will organize a system for recording the names of organizations, government agencies and individuals who wish to receive information on alternative energy sources and applications. When the list is sufficiently large to justify development of a newsletter, the activity will be initiated.

   The newsletter will have several functions. First, it will serve as a medium for making known the results of the demonstration projects carried out through this project. Second, it will inform readers of materials available at the documentation center. Third, it will reprint articles on energy conversion technologies that may have applicability in Panama. Fourth, it will urge conservation of energy and provide practical suggestions for energy conservation. Fifth, it will serve as a medium for announcing courses, whether sponsored by IRHE or other organizations.

   IRHE will charge a nominal fee for subscription to the newsletter. However, these fees are not expected to cover costs of developing and printing the letter for the forseeable future. Consequently, start up costs for this activity, estimated at $10,000, have been included in the project. These costs will be completely financed by IRHE.

4. Courses and Seminars on Alternative Energy Sources. IRHE receives a large number of requests for information on

alternative energy sources. One area of great interest is in solar water heating and solar air cooling for buildings. The technology already exists for solar water heating and solar assisted air cooling. Air conditioning is one of the largest uses of electric energy in Panama City and significant savings for commercial and industrial establishments of all kinds could be realized by use of solar energy for this purpose. The GOP itself is a large user of electric energy for air conditioning.

IRHE will organize a course for private and public sector architects and engineers in solar heating and cooling systems for new and old buildings. The purpose of the course is to familiarize these professionals with already available technology in these areas. The course will be prepared and presented by outside consultants and will include a presentation by IRHE personnel on experiences obtained through the demonstration projects. The course will be Grant funded. The cost is estimated at $25,000. IRHE will commit itself to repeat the course with its own personnel if sufficient demand is exhibited by interested parties. The course will be free of charge for personnel from GOP agencies.

IRHE will also carry out other courses and seminars in response to specific requests or general interest.

SUBSTITUTE DEMONSTRATION PROJECTS

1. Introduction. All of the demonstration projects described in the Project Description Section have been fully evaluated and costed. IRHE and AID have agreed that implementation of these projects is first priority. However, unexpected events during implementation could arise which would make it necessary to seek alternative demonstration projects. The following are some possible substitutes:

2. Substitute Demonstration Projects.

   a. Solar Powered Refrigeration

   There are a large number of fishing cooperatives in Panama. Some of them are in the process of improving their operations by buying larger boats and installing their own storage/processing facilities with credit available through a recent IDB loan. The refrigeration systems for their co-ops have already been ordered and they are incompatible with solar assisted units. One co-op, however, The Fisherman's Association of Playa Leona, has applied for a loan through FODEM (AID Loan 525-T-044). This co-op is very interested in obtaining a solar assisted refrigeration unit for cooling of its storage room and for ice production.

   The cooperative members use small boats (canoas) for fishing activities. Some of these boats have outboard motors; some are hand powered. Due to the small size of the boats, the fishermen take no ice on board and the fish are often on board in an unpreserved state for 3-4 hours. Once they return to port, the fish are stored until transportation to market (mainly Panama City) can be arranged. The fish are transported to market by truck.

   The fishermen currently have no capacity for making ice and store bought ice is expensive. IRHE would like to test the feasibility of installing solar powered refrigeration units in the cooperative. A unit of this type has been developed by Erich Farber of the University of Florida, Gainesville. The unit would be designed to produce sufficient ice to meet the cooperative's needs at rates lower than the cost of ice available in Panama City. The ice would be used for on board and in storage preservation of seafood. The unit would also provide refrigeration for the cold storage room and is expected to reduce consumption of diesel generated electricity to an insignificant level (although some electricity would still be required).

The benefits of the project are expected to include: increased profits for the fishing cooperative and resultant increase in income for some target group families, reduction of losses to IRHE from operation of isolated energy systems and a negligible decrease in oil imports.

If this demonstration project is successful the technology (solar conversion) could be applied to the following kinds of uses: cold storage for perishables of all kinds (e.g., food stuffs, medicines, milk and dairy products), and the production of ice for sale and use in commercial and transportation activities. The Agricultural Marketing Institute (IMA) is very intererested in the possible utilization of this technology in cold storage plants it plans to construct in major towns in the Central and Western regions.

The estimated total cost of this demonstration project is $75,000.A feasibility study could be undertaken as soon as the FODEM loan is approved.

b. Micro-hydros. Feasibility studies for micro-hydros will be prepared under the project. If substitute projects are required, or if savings are unexpectedly realized on implementing other activities, some micro-hydros might be built as demonstration projects after feasibility is established. Costs are estimated at $2-3000/kilowatt and plants of 2-50 kWh would be financed.

c. Energy Production from Agricultural Wastes. Feasibility studies for some demonstration projects which utilize rice hulls for energy will be prepared under the project. Once the feasibility of these projects has been established, they would be considered eligible as possible substitute projects. Total cost of a project to build a rice hull fired rice dryer is estimated at $150,000. Other applications could be added on with minimal additional expense (estimated at $20-30,000 per application).

d. Energy Conservation Demonstration. The GOP consumes approximately one-fifth of the electricity produced by IRHE. Since most GOP institutions don't pay IRHE for this electricity, all other consumers, including the poor, indirectly pay a tax for the GOP's consumption. As a possible substitute demonstration project, IRHE could carry out an energy use analysis of a cooperating GOP agency and design methods for reducing consumption. Total cost is estimated at $50,000 for consultants to develop the methodology for the analysis, assist IRHE in applying it, and helping to design a conservation program.

e. Small Turbine Production and Maintenance Shop. If the micro-hydro program is as feasible as preliminary indications suggest IRHE can expect a potentially large demand for assistance in building these systems. Small turbines are now being produced in Costa Rica, according to one source, and IRHE feels it could mount a similar operation in Panama. The substitute demonstration project would consist of the manufacture, installation and maintenance of at least one locally produced turbine. Total costs are estimated at $150,000 for machine tools (lathe, soldering equipment, etc.) and technical assistance in plant organization and operations.

f. Projects already Evaluated for Inclusion as Demonstration Projects. As noted in the Project Description Section, some 50 potential demonstration projects were considered by the project development committee. Some of them were considered feasible, but of secondary priority. These projects could be substituted for those included in the Project Description.

Some examples are:

(1) Bio-digester at the state dairy farm at Toabré to test the feasibility of cooling milk with a bio-gas operated cooling tank or refrigerator.

(2) Solar stills to produce drinking water for island communities without a potable water source.

(3) Solar refrigeration for a cold storage room at the La Montuna fruit juice cannery. This is a state enterprise located at Divisa in Veraguas province.

(4) Bio-digester at the state-run Pig Farm at Montijo to produce electricity for the farm from pig manure.

PREFEASIBILITY STUDY ON AGRICULTURAL WASTE UTILIZATION

I. INTRODUCTION:

This annex contains two parts. The first is a Mission overview on the background and status of project development regarding the use of rice hulls for energy production. The second is a report submitted by a team from Georgia Tech University who spent a few days in Panama assisting the Mission in developing the idea as a potential demonstration project. For reasons explained in the overview, it has been decided to use the team's report as the basis for proposing a feasibility study rather than a demonstration project.

OVERVIEW:

II. To gain a perspective on the possible utilization of rice hulls as an energy source, the consultants and IRHE personnel visited the town of Soná in Veraguas Province, one of the country's poorest areas (See CDSS). Sonás has 6 private and two public rice mills. The public mills operate mainly when the private mills are working at full capacity. Individual rice producers harvest rice paddy, and deliver and sell it to local rice millers. The price farmers receive depends on the degree of moisture and impurities in the rice. During harvest, the private millers often reject rice with high moisture content rather than run the risk of accepting products which may mold, rot or spoil before they can be dried. The farmer has the option of selling his rice to the Agricultural Marketing Institute (IMA) which pays the support price (maximum) but discounts that price heavily for high moisture content. The farmers prefer to deal with the private millers who pay less for their rice than IMA, but purchase on a cash basis. IMA pays by check usually months after the transaction. The price paid for hundredweight of rice ranges from about $6 to the support price of $10.50.

Rice harvesting takes place during about 3 months of the year. It is during this time that additional drying capacity would help farmers in the Soná area to gain better prices for their products. While the technology could be easily developed to provide this additional capacity through the use of a rice hull fired rice dryer, and preliminary designs and costs have been prepared, there is insufficient financial data to permit a solid assessment of the economic feasibility of such an operation.

There are other potential uses of rice hulls in addition to drying. The hulls could provide energy for such uses as refrigerated meat storage, milk cooling, onion drying and building air conditioning. These latter uses would be continuous and probably economically feasible. However, the techonology has not been developed to a point where a demonstration project can be proposed at this time. Furthermore, sites and cooperating institutions have not yet been selected for demonstration projects.

III. CONSULTANTS REPORT:

A. Rice Drying With Hulls for Fuel

The goal of this project is to demonstrate technology for drying, at the farm level, agricultural products, using agricultural wastes as fuel to displace fuel oil. The region selected is Sona in Veraguas Province and the agricultural product selected is rice. Rice production is organized with individual farmers harvesting rice paddy,selling it,and delivering it to local rice millers for drying and milling. Currently, millers only accept rice for milling which is in good, unspoiled, condition since acceptance of marginal rice would possibly result in economic loss to the miller, if it subsequently spoils. Consequently, at times of excess harvest and overload at the mill, rice may be refused and the farmer can suffer severe economic loss.

The technology that will be used will be similar to that developed by IRRI (International Rice Research Institute). Rice hulls, procured from millers, will be used in a stationary grate burner to generate high temperature combustion gases.

These gases when mixed with air to moderate temperatures will be ducted through a lid of paddy rice. The paddy, after drying, will then be delivered to the miller for drying. This technology will thus give the rice farmer a way to avoid crop loss due to inadequate milling capacity during pick harvest periods.

The number of individual rice farmers who might benefit from this technology depends on timing of harvests, status of operability of rice mills, and many other factors. Estimates from US AID/Panama indicate that about 20% of the total rice crop is wasted with about 20% of this amount (4% of total growth) lost due to inadequate drying capacity. Consequently, it is estimated that up to 4% of rice growers might be benefited from this technology.

The proposed system will first be designed, fabricated and tested at a central facility such as the MIDA national facility at Santiago, Veraguas Province, Panama. The design will be developed with consideration to local materials and skills. It is anticipated that a system utilizing components illustrated in Figure 1 can be constructed locally in many parts of rural Panama.

The initial (pilot) system will be able to dry on a batch basis 25 hundred weight during a cycle. This size unit will require 120 pounds of hull for drying.

It is anticipated that this size unit will be feasible for farms in the 2-10 ha. range. Since the technology is straight forward the farmers should be able to operate and maintain it with minimal training.

The project is organized to include final design, fabrication and test, and evaluation phases. Final design and fabrication can be conducted by a contractor in the U.S. after visits to Panama to evaluate local requirements in the Veraguas Province, Panama. Subsequent to test and fabrication and development of firing rates to reduce moisture content from 26% to 14% the unit should be dismantled, shipped to Santiago, Panama and reassembled on the MIDA complex. Local labor should then be trained in a one month course to dry rice using the dryer. Literature in Spanish, should be prepared describing the system and dissemination to local farmers should be made. Demonstrations through two harvest seasons should then be conducted. The contractor will be responsible for developing the training courses and providing technical assistance to demonstration during the project.

It is estimated that the first dryer can be fabricated for under $10,000 (1979). Subsequent units will cost less than $2,000. Design and test of the unit will cost approximately $30,000. Construction test and evaluation in Panama should cost about $40,000. Technical assistance, training, literature development, etc. to support a demonstration should cost approximately $70,000. The total project cost is, thus, $150,000. Fuel oil is currently used to dry rice. Assuring two drying batches per day (at 4 hrs/batch) and about $1.60/batch of fuel oil required over a typical five month drying season approximately $1600/season can be saved in fuel oil.

B. Rice Hull Fired Rice Dryer

This rice hull fired rice dryer will be constructed as shown in Figure #1. It consists essentially of a flat bed.trailer 6' wide x 12' long constructed to provide a paddy depth of 12 inches which will contain approximately 2500 lbs. of paddy. The bed of the paddy compartment will be perforated to permit the warm air to pass up through the paddy for the hot air plenum below.

The rice hull burner will be of a fixed bed design with baffles to remove the particulate carry over. Access doors will be provided for service and to remove the accumulated ash. The blower and blower motor will be equipped for variable fan speed to adjust the air quantity delivered to the optimum. It is expected that the unit will be adjusted to supply approximately 110°F supply air.

Temperature and pressure gauges will be provided to aid in the dryers operation and to evaluate performance.

One of the prime design considerations is to construct the dryer so that it can be built by the available local labor. It is expected that only the motor and blower assembly will have to be purchased in final form.

The maintenance requirements are expected to be minimal with the principal item being once a day removal of accumulated ash from the furnace. It is expected that after a brief training period one man utilized half time will be able to fuel the furnace about every 30 minutes to insure proper operation.

It is expected that the principal components will have a 20 year minimum life with the exception being the furnace grate system which can be expected to last 5 years. Grate replacement is expected to cost less than $30.00 including labor.

C. Other Applications of Energy from Rice Hulls

The goal of this project is to demonstrate the technology to utilize local waste agricultural materials to produce refrigeration using an absorption refrigeration system. The goal will be achieved by the utilization of a proven direct combustion steam boiler burning waste rice hulls for fuel to provide steam to an absorption refrigeration machine. The refrigeration produced by this system can be utilized to benefit the local population by providing refrigerated meat storage, milk cooling, onion drying and building air conditioning. The agricultural activities in the Republic of Panama are extensive

and this technology can be replicated at numerous locations throughout the country.

Rice hulls are of special interest as there is no present value for the hull and the rice millers now have to pay to have them hauled away. Present rice production in the country is approximately 200 million lbs. As 20% of the rice by weight is rice hull, the production of rice produces 40 million lbs. of hull.

The demonstration of this technology will have several direct and indirect benefits. The principal direct benefit will be improving the quality of life of the local population by providing low cost refrigeration.

The refrigeration can be utilized to provide more sanitary milk, improve the quality of meat and dairy products, and increase the economic value of these foods.

Secondary benefits include the creation of additional local jobs to collect and transport the rice hulls and in the operation of the refrigeration system. The system will provide manggement experience to local officials in the management of alternative energy systems. To the extent that this refrigeration system can be used instead of direct electrically operated systems, the country's dependance on imported oil will be avoided.

The specific purpose of this demonstration project is to provide specific engineering design for a rice hull fired absorption refrigeration system that is to provide refrigeration to an agricultural onion drying facility. The construction costs of the facility will be provided by other funding. In addition to the engineering design, the work will also include the preparation of economic studies, construction inspections, operator training and system evaluation.

The economic studies shall include development of estimated construction, operation and maintenance costs together with required personnel.

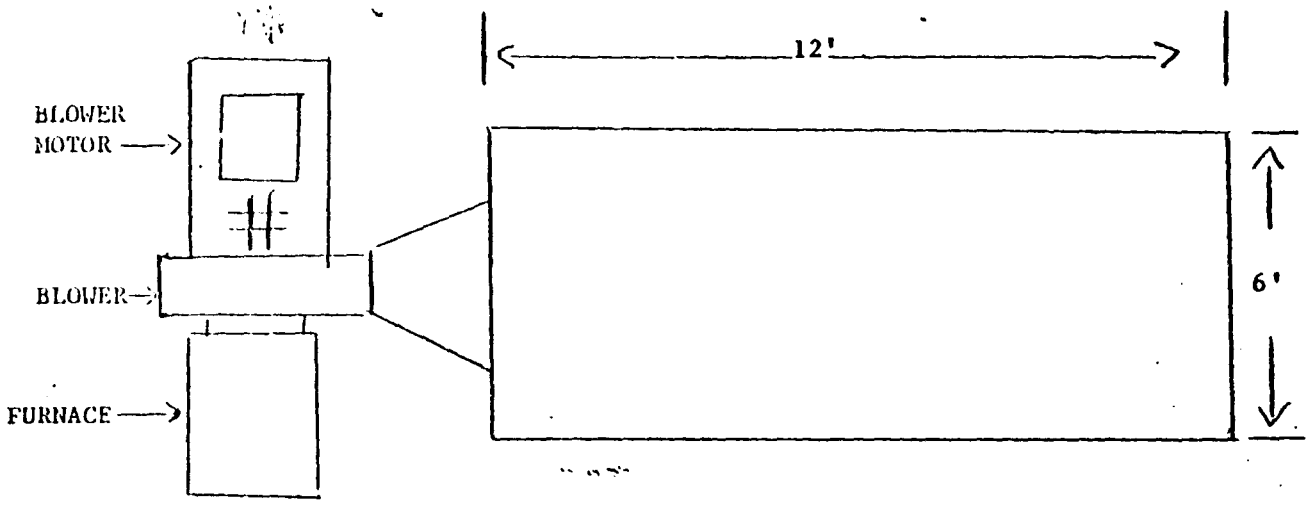

PLAN VIEW

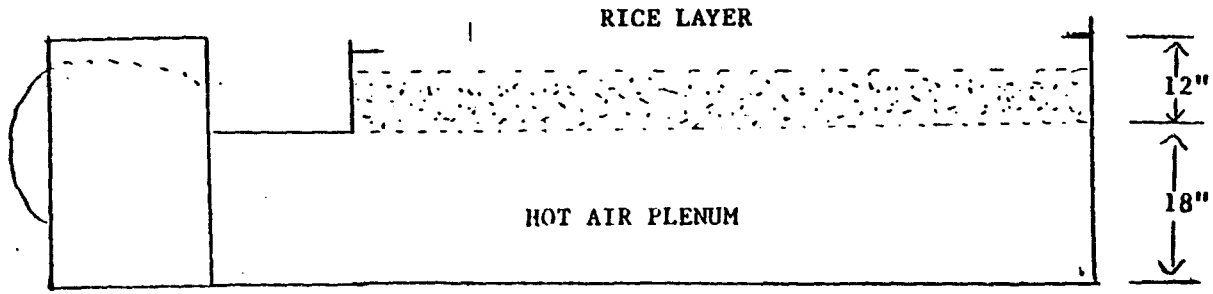

ELEVATION

RICE HULL FIRED RICE DRYER

FIGURE #4

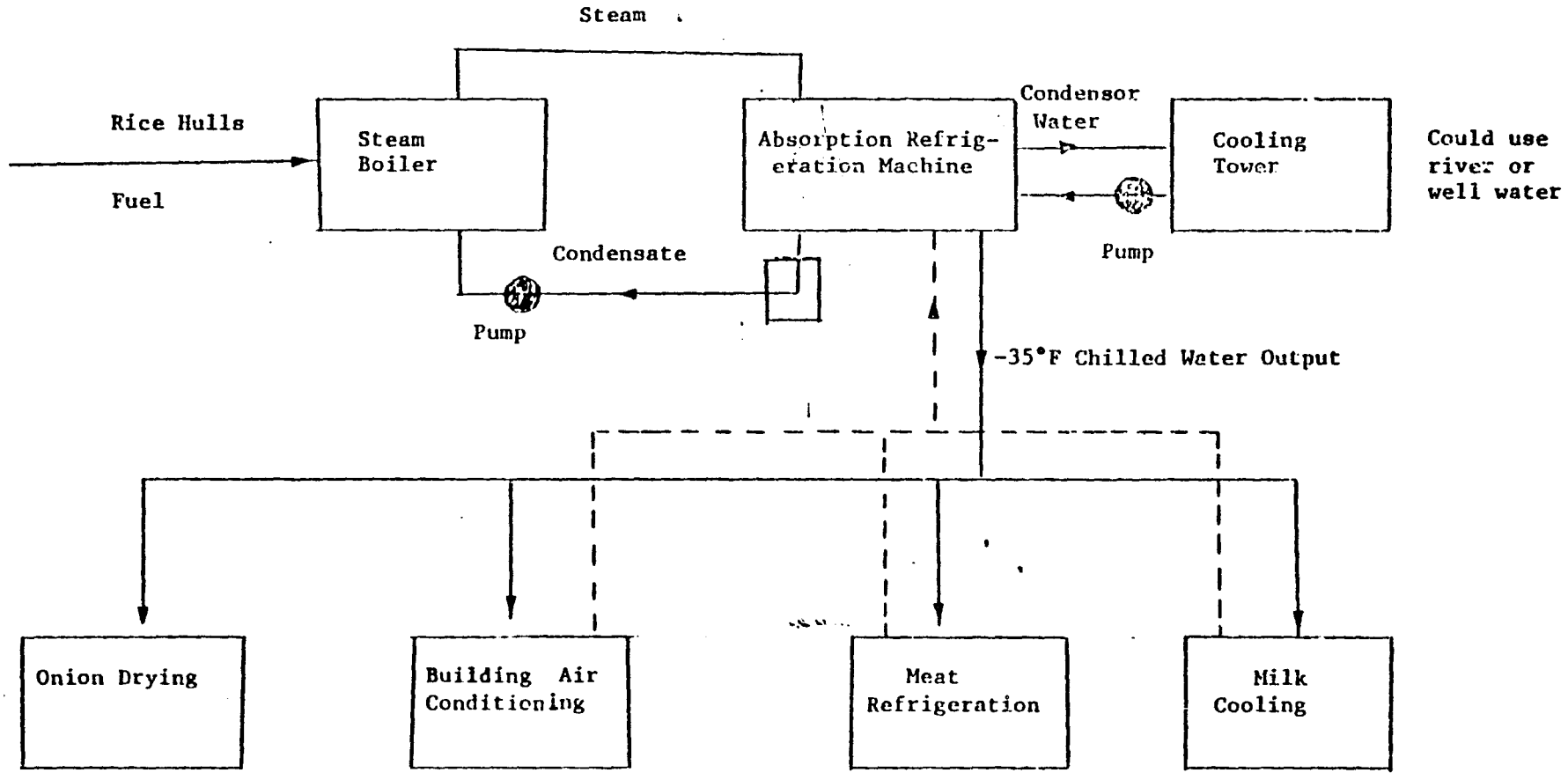

WASTE FUEL FIRED ABSORPTION REFRIGERATION SYSTEM

Figure No.2

ABSORPTION REFRIGERATION ENERGY CALCULATIONS

SUMMARY

A steam driven absorption refrigeration system utilizing the heat from combusting waste rice hulls can produce these unit outputs.

Combusting 3.8 lbs. of rice hulls

- = One Ton of Refrigeration
- = Air Conditioning 300 sq. ft. of a building
- = Cool 28 gallons of milk
- = Refrigerate 250 lbs. of meat

X X X X X X X

Specific heat input of R absorption refrigeration machines

14,000BTU = One ton refrigeration

= 12,000BTU refrigeration

Steam Boiler

Efficiency - Input to steam output burning rice hulls = 65%

$$\frac{14,000}{.65} = 21,538 \text{ BTU}$$

Rice Hulls

= 5,628 BTU per lb.

$$\frac{21,538}{5,628} = 3.8 \text{ lbs. rice hulls to produce one ton refrigeration}$$

One ton of refrigeration is equal to:

- Air condition 300 sq. ft. of a building for an hour
- Refrigerate down to 40°F approximately 250 lbs. of meat
- Cool down to 40°F approximately 28 gallons of milk.

YAVIZA ELECTRIC SYSTEM
OPERATIONS DATA - 1978

FUEL		
Cost per gallon	$	0.5501
Consumption, gallons		52,511
Annual Cost		28,886
LUBRICANTS		
Cost per gallon		2.23
Consumption, gallons		573
Annual Cost		1,280
TOTAL - FUEL & LUBRICANTS		30,166
YIELD - KW per gallon		8.35
OPERATORS SALARIES		
Regular		14,056
Overtime		2,651
Total		16,707
TOTAL OPERATING COST	$	46,873
AVERAGE COST PER KWH		10.69 ¢

FROM: IRHE
Gerencia de Sistemas Aislados

YAVIZA ELECTRICAL SYSTEM

Location	Hours of Service	Customers	Lights		Installed Capacity		Demand		Total Generators KWH
			Quantity	Watts	No.	KW.	KW.	Avg. Client	
Yaviza	24	104	35	6,125	2	210	106	535	438,440
El Real	24	74	16	2,800	-	-	-	535	-
Pinogana	24	20	9	1,575	-	-	-	535	-

FROM: IRHE
Gerencia de Sistemas Aislados

GERENCIA DE SISTEMAS AISLADOS - 1978

		SERVICIO			CLIENTES 31-12-78	LUMINARIAS		CAP. INSTALADA		DEMANDA		GENERACION
		Horas	De	A		Cantidad	Vatios	Unid.	KW.	Max. KW	Por Cliente W.	TOTAL KWH
	PANAMA											
50	Tabasa	24	-	-	331	125	21,490	3	600	200	604	1,060,800
51	Chepillo	16	2p.m.	6 am.	65	14	2,450	1	30	15	230	32,040
51	Otoque Oriente (1)	16	2p.m.	6 am.	107	30	5,250	-	-	-	183	-
51	Otoque Occ. (P1)	16	2p.m.	6 am.	75	24	4,200	2	90	33	183	47,597
51	San Miguel	16	8am.	24:00	145	31	5,425	1	75	62	427	88,324
50	El Valle	24	-	-	514	30	5,250	4	950	178	692	715,734
	DARIEN											
52	Garachiné	16	8am.	24:00	89	25	4,375	1	60	44	494	68,065
52	Boca de Sábalo	10	2p.m.	24:00	22	-	-	1	54	9	409	12,718
52	La Palma	24	-	-	204	32	5,600	5	450	116	568	572,333
52	Sotomonti (2)	16	8am.	24:00	-	8	1,400	-	-	-	471	-
52	Chepigana (P3)	16	8am.	24:00	53	15	2,625	1	60	25	471	70,304
52	Tucutí	8	2p.m.	24:00	19	10	1,750	1	25	8	423	14,122
52	El Real (3)	24	-	-	74	16	2,800	-	-	-	535	-
52	Pinogana (3)	24	-	-	20	9	1,575	-	-	-	535	-
52	Yaviza (P3)	24	-	-	104	35	6,125	2	210	106	535	438,440
52	Jaqué	16	8am.	24:00	57	25	4,375	1	85	25	439	49,046
	LOS SANTOS, CENTRALES Y CHIRIQUI											
53	Cañazas - Ver.	24	-	-	131	56	9,800	2	170	33	251	205,412
54	Las Palmas - Ver.	16	2p.m.	6 am.	89	41	7,175	1	60	38	426	110,281
53	Santa Fé - Ver.	16	8am.	24:00	72	-	-	1	50	33	458	77,552
54	Tupetillo - Ver.	16	-	-	1	-	-	1	55	-	-	5,620
55	Las Minas - Herr.	16	2p.m.	6 am.	136	31	7,000	1	50	31	228	90,112
55	Los Pozos - Herr.	16	2p.m.	6 am.	168	55	9,625	1	175	52	276	116,691
56	Llano de Piedra L.S. (4)	24	-	-	105	89	15,575	-	-	-	467	-
56	Macaracas - L.S. (P4)	24	-	-	255	60	10,500	3	450	168	467	429,218
55	Tonosí - L.S.	16	12m.	4 am.	181	94	16,450	2	185	88	486	185,251
53	Río Sereno Ch.	16	8am.	24:00	73	29	5,075	1	85	13	183	109,725
	COLON											
57	Portobelo	24	-	-	144	20	3,500	2	90	49	340	176,658
57	Santa Isabel (5)	16	2p.m.	6 am.	58	11	1,925	-	-	-	182	-
57	Palmira (P5)	16	2p.m.	6 am.	41	10	1,725	2	75	18	182	39,364
57	Puerto de Piña (6)	24	-	-	67	17	2,975	-	-	-	244	-
57	Palenque (6)	24	-	-	38	9	1,575	-	-	-	244	-
57	Viento Frío (6)	24	-	-	19	11	1,925	-	-	-	244	-
57	Cuango (6)	24	-	-	-	5	875	-	-	-	244	-
57	Playa Chiquita (6)	24	-	-	-	5	875	-	-	-	244	-
57	Miramar (P6)	24	-	-	52	8	1,400	3	345	43	244	198,356
57	Isla Grande	10	6am.	24:00	26	8	1,400	1	75	19	730	61,704
57	Piña (7)	24	-	-	-	13	2,275	-	-	-	-	-
57	Chagres (7)	24	-	-	54	11	1,925	-	-	-	-	-
57	Salud (7)	24	-	-	-	5	875	-	-	-	-	-
57	Río Indio (7)	24	-	-	-	13	2,275	-	-	-	-	-
57	Palmas Bellas (P7)	24	-	-	159	27	4,725	2	190	78	366	265,912
57	Escobal	24	-	-	120	31	7,052	2	90	41	320	165,457
57	El Guabo (8)	8	4p.m.	24:00	-	-	-	-	-	-	-	-
57	Calpo (P8)	8	4p.m.	24:00	7	16	2,800	1	55	13	1,857	4,049
	BOCAS DEL TORO											
59	Bocas del Toro	24	-	-	641	100	17,500	4	984	245	382	175,391
	DARIEN											
57	Corazón de Jesús (9)	16	8am.	24:00	-	9	1,575	-	-	-	304	-
57	Bayano (P9)	16	8am.	24:00	95	11	1,925	3	110	35	364	119,487
57	Río Azucar	16	2p.m.	6 am.	32	11	1,925	2	55	11	343	36,624
	Total				4,672	780	209,517	58	6,018			5,754,927

BEST AVAILABLE COPY

GERENCIA DE SISTEMAS AISLADOS – GASTOS DE OPERACION DE PLANTAS -1976-

	COMBUSTIBLE			LUBRICANTE		TOTAL	MANTENIMIENTO	OPERADORES					COMBUSTIBLE		RENDIMIENTO
	Costo por Gal.	Consumo por Gal.	Total Anual B/.	Costo por Gal.	Consumo por Gal.	Total Anual B/.	Combustible y Lubricante	Mo/Kpl.	Salario B/.	Horas Extra B/.	Total Anual B/.	Total B/. Operación	Costo Operación BMS Generador Centésimo	Consumo 1976	Valor 1976	Km/Gal. 1976
ZONA																
Tabogá	0.5453	118.241	64,476.86	2.2203	1,124	2,504.83	66,981.65	8.97	25,186.13	3,973.54	29,159.67	96,141.32	9.06	113,476	45,843.00	10.2
Chepillo	0.5501	9,344	5,151.14	2.2331	193	430.99	5,582.13	3.42	9,060.00	2,351.83	11,419.83	17,001.96	53.04	6,879	10,316.05	5.0
Chepo Cabecera (1)		-	-	-	-	-	-	-	-	-	-	-	-			-
Chepo (Ext.) (P3)	0.5453	14,613	7,969.56	2.2203	114	254.05	8,223.61	3.46	8,936.29	2,203.22	11,139.51	19,363.12	60.72	13,154	5,222.14	7.1
San Miguel	0.5406	19,215	10,776.86	2.2240	763	1,696.91	12,473.77	4.53	11,378.02	2,694.35	14,072.37	26,546.14	30.06	22,965	10,316.05	5.6
El Valle	0.4600	97,959	45,056.34	2.1472	1,030	2,211.62	47,268.16	7.31	14,113.83	3,678.83	17,792.66	65,060.82	9.08	129,454	53,723.41	5.7
DARIEN																
Marañón	0.5501	13,726	7,550.67	2.2331	413	473.65	8,024.32	4.95	9,306.81	1,954.32	11,260.73	19,287.05	28.26	14,160	6,669.36	5.0
Boca de Sábalo	0.5501	3,606	1,432.46	2.2331	12	26.80	1,459.26	4.46	7,044.21		7,044.21	8,503.47	66.06	-	-	-
La Palma	0.5501	74,364	40,907.64	2.2331	1,447	3,284.68	43,692.32	7.70	12,785.34	2,442.96	15,228.30	58,920.62	10.29	75,134	33,360.11	5.5
Boca Chica (2)								-	-	-	-	-	-	-	-	-
Chepigana (P2)	0.5501	14,490	7,970.93	2.2331	170	611.11	8,305.04	4.92	7,365.00	902.80	8,267.80	16,572.92	24.14	6,563	3,032.12	5.6
Tucutí	0.5976	1,217	1,924.48	2.2745	105	239.24	2,161.72	4.39	3,931.25	1,333.30	5,264.55	9,426.07	66.75	2,668	1,162.43	5.0
El Real (3)																
Pinogana (3)																
Yaviza (P3)	0.5501	52,511	28,886.30	2.2331	573	1,279.57	30,165.87	8.35	14,036.24	2,631.43	16,707.67	46,873.54	18.69	62,323	29,355.00	5.0
Jaqué	0.5650	15,996	9,036.41	2.2512	261	587.56	9,624.17	3.07	8,711.12	1,329.47	10,040.59	19,664.76	40.09	14,064	6,669.36	3.1
PCH SISTEMAS E SOPORTE																
Cañazas Ver.	0.6750	41,463	19,529.93	2.1622	593	1,282.18	20,882.11	5.08	14,389.94	3,924.36	18,314.70	39,196.81	18.70	36,351	15,630.93	4.7
Las Lajas Ver.	0.6750	18,006	8,551.90	2.1622	148	320.01	8,871.91	6.37	8,750.58	2,261.16	11,011.14	19,883.65	16.81	12,942	5,565.06	7.3
Remedios Ver.	0.6750	14,650	6,956.75	2.1622	350	756.77	7,715.52	5.32	6,138.58	1,629.16	[illegible]	15,474.76	19.05	14,251	6,127.93	4.6
Soyatillo Ver.	0.6750	2,011	955.70	2.1622	17	36.76	992.46	2.29	16,501.49	709.81	17,211.30	18,203.76	-	-	-	[illegible]
Las Minas Ver.	0.6750	13,795	6,552.63	2.1572	414	893.08	7,445.71	6.53	6,221.00	5,636.64	11,842.64	19,300.37	21.43	16,369	6,178.67	6.9
Las Minas - Ver.	0.6750	34,[illegible]	16,226.98	2.1572	746	1,609.27	15,964.25	3.86	12,212.34	2,804.34	15,016.68	30,980.93	26.55	36,792	14,960.56	3.3
Llano de Piedra S.A.			-	-	-	-	-	-	-	-	-	-	-	-	-	-
Mamoní S.A. (P4)	0.6750	97,375	46,253.13	2.1622	1,102	2,382.74	48,635.87	4.41	14,023.28	3,632.72	18,256.00	66,891.87	15.50	72,896	31,345.28	3.8
Tonosí S.A.	0.6750	29,515	13,936.13	2.1622	706	1,526.51	15,460.64	4.32	9,664.66	2,997.60	12,662.26	28,122.90	15.19	26,208	11,269.44	4.2
Río Tavasará Chiriquí	0.5379	21,945	11,806.22	2.1400	141	1,397.38	13,203.60	3.00	9,531.94	1,266.91	10,798.85	24,000.45	21.87	20,130	10,467.60	1.4
SEDE																
Sabanitas	0.6500	30,384	19,627.80	2.1322	630	943.93	14,571.23	5.03	16,883.08	3,449.12	20,332.20	34,903.43	19.75	28,458	11,383.20	5.7
Santa Isabel (5)		-	-	-	-	-	-	-	24,722.31	2,963.46	27,685.57	-	-	-	-	-
Patillas (P5)	0.5018	9,324	5,437.76	2.2744	234	577.70	6,015.46	4.22	15,207.45	2,932.04	18,139.49	24,154.95	81.36	20,726	9,040.24	3.98
Nueva de Bisa (6)																
Belenguer (6)		-	-	-	-	-	-	-	-	-	-	-	-	-	-	-
Vicente Lefo (6)		-	-	-	-	-	-	-	-	-	-	-	-	-	-	-
Calzada (6)		-	-	-	-	-	-	-	-	-	-	-	-	-	-	-
Playa Chiquita (6)		-	-	-	-	-	-	-	-	-	-	-	-	-	-	-
Mariato (P6)	0.5018	33,624	20,776.75	2.2744	918	2,076.25	22,853.00	5.57	17,780.35	4,311.84	22,100.19	44,949.19	22.66	36,800	16,192.00	5.2
Sona Grande	0.5018	16,464	10,268.20	2.2744	362	823.33	11,591.53	3.36	8,516.17	2,041.22	10,557.39	22,148.92	35.90	-	-	-
Pixa (7)			-	-	-	-	-	-	-	-	-	-	-	-	-	-
Chagres (7)			-	-	-	-	-	-	-	-	-	-	-	-	-	-
Soloy (7)			-	-	-	-	-	-	-	-	-	-	-	-	-	-
Río Guna (7)			-	-	-	-	-	-	-	-	-	-	-	-	-	-
Sistema Medias (P7)	0.5500	60,832	18,401.60	2.1572	631	1,361.19	19,762.79	4.50	11,983.36	3,088.86	15,072.20	33,915.79	22.76	30,599	22,627.60	4.9 **
Sambú	0.5500	21,083	10,765.32	2.1572	312	[illegible]	[illegible]	3.21	13,856.03	3,546.07	17,402.10	30,224.60	18.23	29,646	13,014.73	4.2
[illegible] (8)			-	-	-	-	-	-	-	-	-	-	-	-	-	-
Cuyas (P8)	0.5550	1,824	879.94	2.1572	33	71.19	951.11	2.22	1,873.81	358.61	2,232.42	2,933.53	72.43	-	-	-
BOCAS DEL TORO																
Bocas del Toro	0.6235	21,132	13,175.[illegible]	2.0527	220	451.48	13,627.28	6.16	3,165.41	464.70	3,630.11	17,473.39	9.96	-	-	6.0
[illegible]																
[illegible]																
Changuinola (1)	0.5012	17,591	10,142.43	2.2744	191	869.49	11,011.92	6.01	10,861.05	2,417.90	13,278.95	24,330.87	20.36	21,375	9,405.00	4.2
El [illegible] (P1)	0.5012	9,080	5,248.96	2.2744	114	757.65	6,058.61	6.01	11,245.05	1,244.14	12,489.19	20,548.00	56.24	3,343	3,231.00	4.0
[illegible]	[illegible]	213,752	167,172.15	[illegible]	13,[illegible]	33,767.17	192,967.22	6.41	264,228.10	73,987.51	449,217.61	641,184.83	-	-	-	

BEST AVAILABLE COPY

INSTITUTO DE RECURSOS HIDRAULICOS Y ELECTRIFICACION
GERENCIA DE SISTEMAS AISLADOS
COSTOS REVISADOS DE COMBUSTIBLE Y LUBRICANTE.
(Válidos a partir del 1 de Agosto de 1978).

	COMBUSTIBLE						LUBRICANTE				
PLANTAS	Cost. por Gal. en Refinería.	Transp. Marit. por Tambor.	Costo Transp. Marit. por Gal.	Transp. Terrest. por Gal.	Salario Personal I.R.H.E.	Costo Total Gal. Combustible.	Cost. por Gal. Lubricante.	Transp. Marit. por Tambor.	Costo Transp. Marit. por Gal.	Salario Personal I.R.H.E.	Costo Total Gal. Lubricante.
TABOGA	.4250	4.75	.0903	.015	.015	.5453	2.1272	4.75	.0863	.015	2.2285
CHEPILLO	.4250	5.00	.0951	.015	.015	.5501	2.1272	5.00	.0909	.015	2.2331
OTOQUE OCC.	.4250	4.75	.0903	.015	.015	.5453	2.1272	4.75	.0863	.015	2.2185
SAN MIGUEL	.4250	4.50	.0856	.015	.015	.5406	2.1272	4.50	.0818	.015	2.2240
GARACHINE	.4250	5.00	.0951	.015	.015	.5501	2.1272	5.00	.0909	.015	2.2331
LA PALMA	.4250	5.00	.0951	.015	.015	.5501	2.1272	5.00	.0909	.015	2.2331
CHEPIGANA	.4350	5.00	.0951	.015	.015	.5501	2.1272	5.00	.0909	.015	2.2331
YAVIZA	.4250	5.00	.0951	.015	.015	.5501	2.1272	5.00	.0909	.015	2.2331
TUCUTI	.4250	7.50	.1426	.015	.015	.5976	2.1272	7.50	.1363	.015	2.2785
JAQUE	.4250	6.00	.1100	.015	.015	.5650	2.1272	6.00	.1090	.015	2.2512
BOCA DE SABALO	.4250	5.00	.0951	.015	.015	.5501	2.1272	5.00	.0909	.015	2.2331
CAÑAZAS	.4250	----	----	.05	----	.4750	2.1272	----	----	.035	2.1622
SANTA FE	.4250	----	----	.05	----	.4750	2.1272	----	----	.035	2.1622
RIO SERENO	.5179	----	----	---	.02	.5379	2.160	----	----	.02	2.1800
LAS PALMAS	.4250	----	----	.05	----	.4750	2.1272	----	----	.035	2.1622
LAS MINAS	.4250	----	----	.05	----	.4750	2.1272	----	----	.03	2.1572
LOS POZOS	.4250	----	----	.05	----	.4750	2.1272	----	----	.03	2.1572
TONOSI	.4250	----	----	.05	----	.4750	2.1272	----	----	.035	2.1622
MACARACAS	.4250	----	----	.05	----	.4750	2.1272	----	----	.035	2.1622
EL LLANO	.4250	----	----	.035	----	.4600	2.1272	----	----	.03	2.1572
NARGANA	.4250	7.00	.1332	.01	.015	.5832	2.1272	7.00	.1272	.02	2.2744
RIO AZUCAR	.4250	7.00	.1332	.01	.015	.5832	2.1272	7.00	.1272	.02	2.2744
PORTOBELO	.4250	----	----	.025	----	.4500	2.1272	----	----	.025	2.1522
PALMIRA	.4250	7.00	.1332	.01	.015	.5832	2.1272	7.00	.1272	.02	2.2744
SANTA ISABEL	.4250	7.00	.1332	.01	.015	.5832	2.1272	7.00	.1272	.02	2.2744
MIRAMAR	.4250	7.00	.1332	.01	.015	.5832	2.1272	7.00	.1272	.02	2.2744
ESCOBAL	.4250	----	----	.025	----	.4500	2.1272	----	----	.03	2.1572
PALMAS BELLAS	.4250	----	----	.025	----	.4500	2.1272	----	----	.03	2.1572
ISLA GRANDE	.4250	7.00	.1332	.01	.015	.5832	2.1272	7.00	.1272	.02	2.2744
EL VALLE	.4250	----	----	.035		.4600	2.1272	----	----	.02	2.1472
BOCA DE CUPE	.4250	9.00	.1712	.015	.015	.6262	1.9436	9.00	.1636	.015	2.1222

SOLAR AND WIND ENERGY RESOURCE CHARACTERIZATION

Panama (Figure 1) located between latitudes 8° and 9°N and longitudes 80°and 82°W with two long coast lines and a long line of high mountains in the center of the country is ideally situated to have exploitable renewable solar and wind resources. In the Directorate of Engineering of IRHE, the Department of Hydrometeorology has been measuring solar insolation and radiation at 11 stations. The data covers one to eight years for these various stations. There are also seven stations which record wind velocity and direction. Table I presents the location of the permanent recording stations and a summary of 1975 data for wind and solar radiation. Figure I locates the stations by the identification number contained in Table I. Figure II is a presentation of average monthly solar isolation and radiation data for 1975 for the Los Santos station. The Los Santos area has the highest measured insolation and radiation history of all the recording stations in Panama. Table II presents maximum, minimum and average temperature data for several recording stations. Raw data is available for several years of record including through 1978; however, all of this data has not been published individually nor as a cumulative record. The Department of Hydrometeorology is planning to prepare a summary report of this and other data for use in planning alternative energy resource development. They also hope to upgrade and expand the coverage of their monitoring in the future.

The solar and wind regimes have several geographic and statistical characteristics important to successful exploitation. The average amount of solar radiation reaching the earth as measured at the seven reporting stations around the country varies by only a maximum of 14 percent between any two stations. This evenness of energy delivery is not only a geographic characteristic as shown above and in Table I but also an annual phenomena. Figure II shows the minimum amount of variation at a typical station over the year in both radiation intensity (Langleys) and in hours of sunlight per month (insolation). The average amount of sunlight at the stations shown in Table I is 5.1 hrs/day; the average amount of radiation reaching the ground for each station is 382 cal/cm^2-day. For an average square meter of ground there are 3,820,000 calories of energy received per day (15,000 BTUs) or approximately six horsepower hours. This comparison assumes perfect conversion of solar energy to work. This is not possible and depending on the technology between 10 percent (photovoltaics) and 30 percent (direct hot water heating) efficiency in conversion is possible.*

The typical evenness of energy delivery (not hours of sunlight) throughout the year shown in Figure II is a very useful attribute. This is because under these conditions the daily energy delivered by a device powered by solar radiation will also vary little throughout the year. Thus, backup systems if needed can be sized to operate at a fixed rate continuously throughout the year. A

A drawback shown by the solar energy statistics is that on the average only 5.1 hours of sunlight are available and the number of hours available per month varies by as much as a factor of 3 during the year. For uses that need energy more hours per day than the average or at times other than during daylight, storage or backup generation systems will be necessary. However, because the average daily amount of radiation delivered is very even over the year, the necessary backup systems can take advantage of this and be designed to operate at their highest efficiency. Because of the variation and the few hours of direct sunlight available, it is likely that concentrating collectors of those not capturing substantial amounts of diffuse radiation will not be efficient in most places in Panama.

The temperature data shown in Table III are interesting for two reasons. The geographical and seasonal evenness discussed earlier for solar radiation delivery is also found in the temperature statistics. Additionally, because of the high average annual temperature air conditioning is potentially useful everywhere all months of the year. This is a gross generalization based on few data but the trend does suggest potential countrywide application of solar powered cooling.

Wind velocity has not been measured in as many locations in the country as has solar radiation and thus, it is hard to generalize about wind power applicability. Because ground level wind velocity is influenced by the local geography and micrometeorology, it will vary across the country much more than temperature or solar radiation. The few data which are available (See Table I for one year of record for several stations) show low average winds at the stations where wind velocity is measured. Additionally, examination of the raw data from which table I was prepared indicates that the first third of the year (January through April) is often the time of highest average winds. It is generally recognized that at a minimum an average velocity of 3.5 meters/sec (M/S) is necessary to operate a multi-bladed farm type windmill useful for direct mechanical water pumping. Average wind velocities of 4.5 M/S or higher are necessary for windmills which generate electricity. Using these general rules it can be seen that none of the reporting stations listed in Table I would support wind driven electricity generation year round and only one would be acceptable for part of the year. However, it must be stated that the existing wind measurement stations are not located in nor were they selected to identify places where wind energy capture might be possible. It is known, for example, that there are higher altitude locations in Panama where wind driven electrification is possible. Also, there are many areas of the country at lower altitudes where wind regimes are suitable for conversion to electricity at least part of the year. This is especially true for Cocle and Los Santos Provinces, the off-shore islands and the Atlantic coast.

---

*Discussions with Engineer Claudia Candanedo of IRHE's Department of Hydrometeorology.

As a summary to the above resource characterization, it must be stated that a more thorough analysis of the basic characteristics of the solar and wind regimes is necessary. It is also important to begin to collect and publish annual summaries of all years of record for pertinent meteorological data. For wind, it is important to prepare and publish duration-intensity curves for existing measurement stations and to locate wind measuring instruments in several more "logical" stations (logical from the standpoint of identifying possible sites for locating wind energy systems). Finally, the amount of solar radiation is sufficiently large and its distribution is sufficiently even to warrant exploitation for many uses. Wind is not always as potent or reliable a source of energy as solar but because it can be used part of the year it should be considered as an adjunct to or partner with other energy sources such as solar and hydro. Wind generation of electricity on islands such as those in the San Blas chain is possible and will likely be much more economical than the diesel based generation systems now employed. The upcoming alternative energy resource characterization and development study to be conducted by IRHE can incorporate the above suggestions and could be expanded to accomplish almost all of the other pertinent recommendations in this report.

DIVISION POLITICA DE LA REPUBLICA DE PANAMA

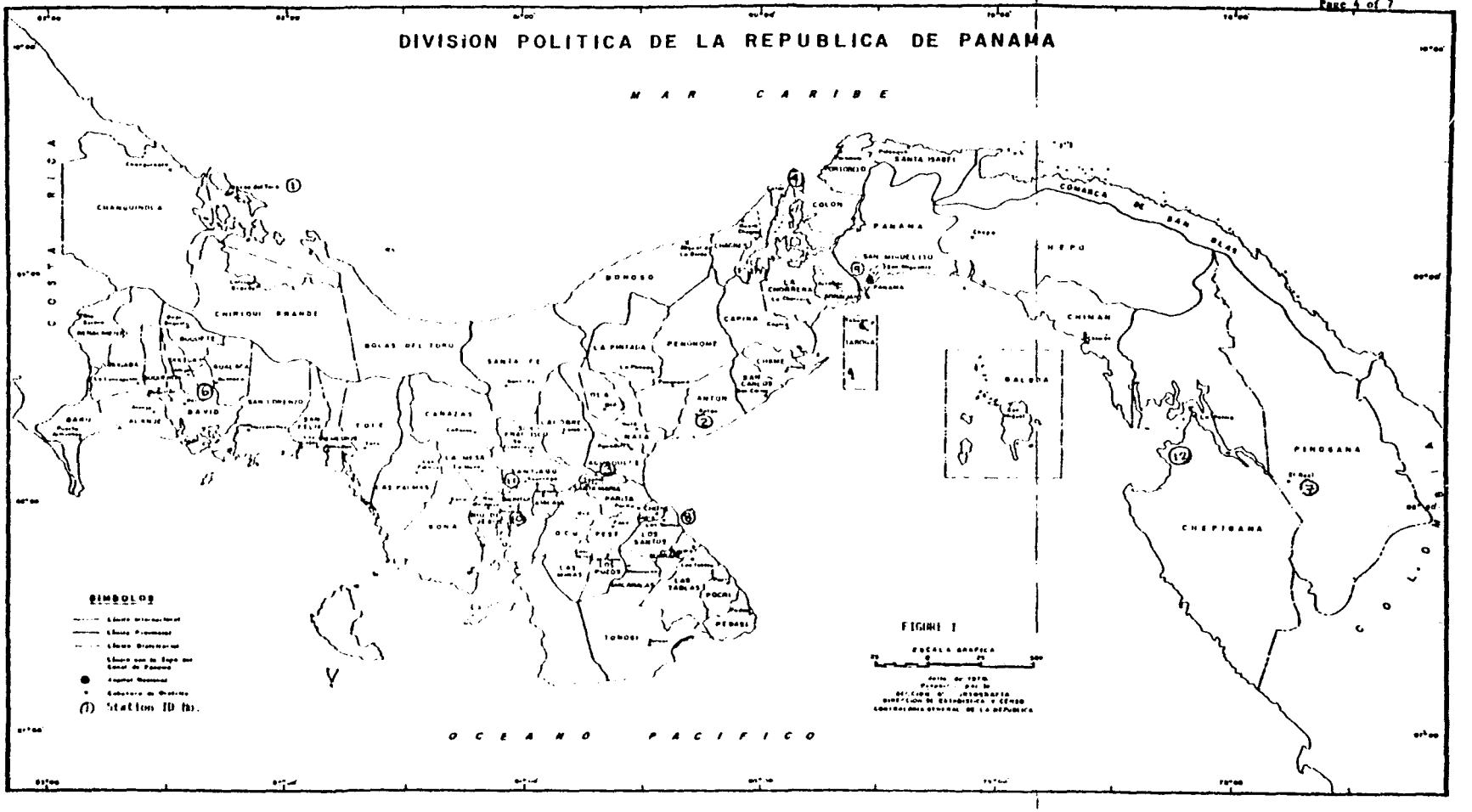

TABLE I*

1975 AVERAGE SOLAR AND WIND DATA FOR PANAMA

METEOROLOGICAL STATIONS

ID No.	Station Location	Solar Isolation Hrs./Mo.	Solar Isolation Hrs./Day	Solar Radiation Cal/cm^2-day	Monthly Wind Velocity (M /sec) Annual Average	First Third Average	Recorded Minimum
1.	Bocas del Toro	120	4.0	--	2.1	2.1	12.1
2.	Anton	171	5.6	392	3.1	5.45	14.6
3.	Santa Rosa	174	5.7	--	--	--	--
4.	Salud (Icacal)	165	5.4	370	--	--	--
5.	Bojo Grande	125	4.1	385	--	--	--
6.	David	184	6.0	381	2.4	2.85	13.7
7.	El Real	117	3.8	--	1.4	1.75	11.9
8.	Los Santos	186	6.1	421	2.5	4.23	14.3
9.	Tocumen	146	4.8	380	1.7	2.23	15.2
10.	Coiba	152	5.0	342	--	--	--
11.	La Roya	158	5.2	--	--	--	--
12.	Ojo de Agua	--	--	--	2.6	4.2	17.7

*Data taken from Estadistica Panamena Ano 1976, Seccion 121, Clima, Situacion Fisica, Meteorologia Ano 1975.

FIGURE II

AVERAGE MONTHLY SOLAR RADIATION AND INSOLATION DATE*
FOR 1975 AT LOS SANTOS

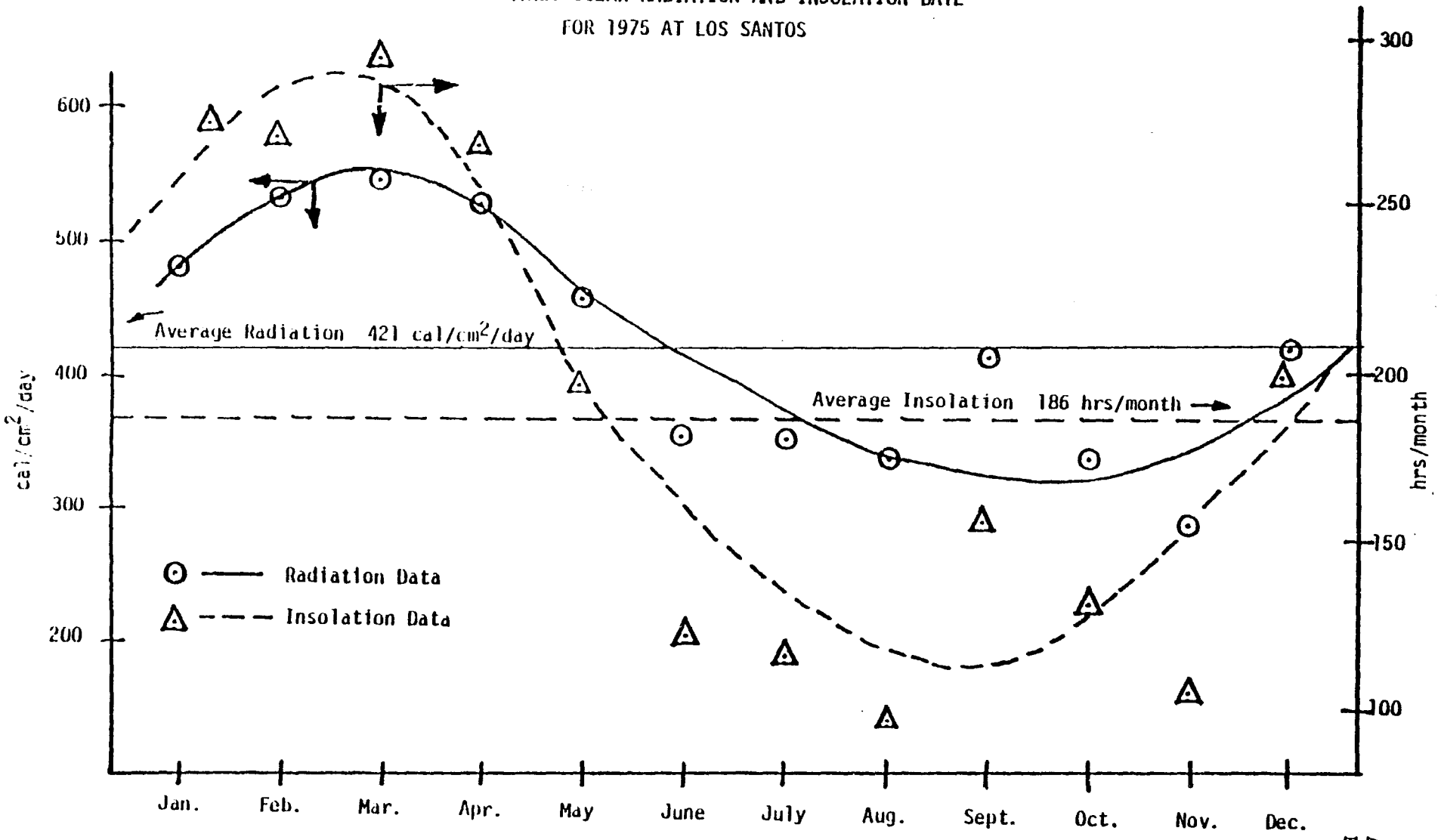

*Situacion Fisica Meteorologia Ar6 1975, seccion 121 Clima, Republica De Panama 1976

TABLE II

1975 TEMPERATURE DATA FOR SEVERAL METEOROLOGICAL STATIONS*

Station ID	Location Name	Temperature °C Ave.	Max.	Min.	Province
10	Montijo	26.1	30.3	21.8	Veragus
6	David	26.3	30.9	21.7	Chiriqui
1	Bocas del Toro	25.8	28.9	22.7	Bocas del Toro
8	Los Santos	27.4	32.3	22.5	Los Santos
11	Santiago	26.5	31.6	21.3	Veraguas
2	Anton	26.9	30.7	23.1	Cocle
9	Panama	26.9	30.7	23.0	Panama
12	Garachine	26.3	30.0	22.6	Darien

*Statistics for some stations compiled using incomplete and/or estimated data and the Source is the same as for Table I.

DETAILED TECHNICAL ANALYSIS

1. Electric Generation Plant at Yaviza

a. Summary Description and Appropriateness of the Technology

(1) Summary Description

In this system wood is combusted in a steam boiler and the steam produced is used to operate a steam turbine which in turn drives an electric generator. A schematic drawing of the principal components of this system together with energy flow patterns is given in Figure No.1.

Mill wastes are first collected by locally trained labor and chipped with a commercial chipper to produce green wood chips approximately 1" x 2" x 1/2" in size. The green chips are then dried in a wood dryer whose purpose is to reduce the moisture content of the wood so that it can be easily combusted. Green wood (wood freshly cut) has a moisture content that equals approximately 50% of its weight. Before it can be burned this moisture must be reduced to about 20%. The heat required to dry the wood will come from the boiler flue gases and from the hot air given off by the steam turbine air cooled condenser.

The dry wood is then used to fire the steam boiler. It is proposed that this will be achieved by manual stoking. The steam produced is then used to operate a steam turbine and mechanical shaft power produced by the turbine is inturn used to run an electric generator.

To close the steam cycle the exhaust steam from the turbine is condensed to water by the air cooled condenser and the water is then pumped back to to the boiler by a pump to begin the cycle again. As stated previously, the hot air produced by the steam condenser is taken to the wood dryer to dry the fuel.

(2) Appropriateness:

In analyses conducted to select a system configuration several criteria were used. These include availability of local renewal resources, attitude of local labor toward the proposed technology, sociological acceptance of the technology, capability for local support of the selected technology, (e.g. repair of chain saws, chippers, etc.), reliable operation of technology in remote tropical regions, previous demonstration of technical feasibility, first cost (capital costs), and operating and maintenance costs.

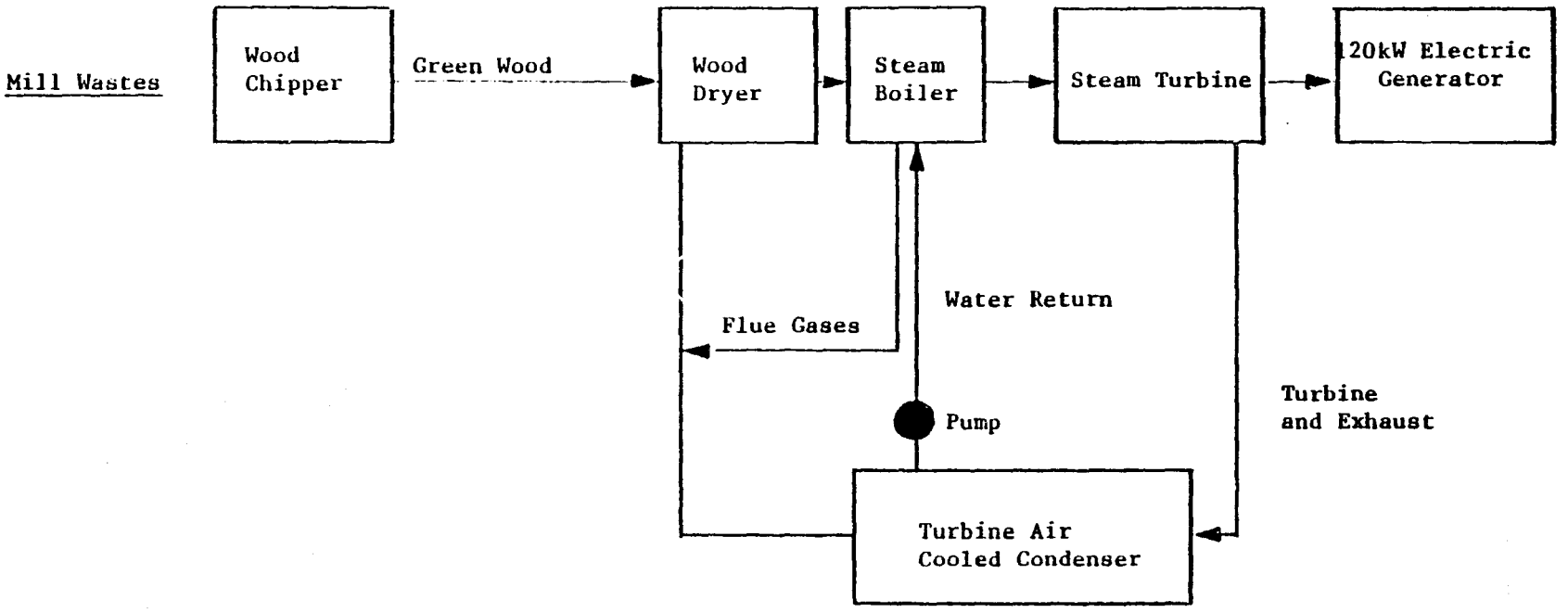

FIGURE No.1: PROPOSED WOOD FIRE STEAM BOILER TURBINE ELECTRIC SYSTEM

Low technology pyrolytic conversion of wood to char, oil and gas had been suggested and serious consideration was given to the technology. This technology was rejected for several reasons. During a visit to Yaviza it was determined that local skills and knowledge were not so basic that a primitive technology was required. Support capabilities for engine repair and understanding of operation of diesel/electric systems was evident at the site. It was felt that use of a primitive technology was unnecessary given local competence. Low cost pyrolysis systems have not been regularly operated in the tropics and consequently little experience exists. Stability of pyrolytic oils and corrosive effects of pyrolytic oils in this environment have not been evaluated sufficiently to guarantee reasonable success in use of oil as a local fuel. Health effects of using pyrolitic oils are not clearly understood at the present and may present serious health hazards to persons operating such plants. The purpose of the effort-to demonstrate alternative energy sources-precluded a research and development (R&D) effort. Since R & D would be needed to perfect pyrolytic conversion technology, it was not deemed appropriate in this instance.

Since the local population understands the wood industry and since wood is the most abundant local resource, it was selected as an energy source. Three sawmills and seven commercial logging operations are located in the immediate area, operating under concessions granted by RENARE. Mill wastes are in abundant supply. However, as a continuous supply of mill wastes is not assured, the project will require development of a longer term supply source. This need will be met by utilizing materials produced from a forest operated as an energy plantation. Having made this decision on fuel source and type, the method of wood processing and conversion to electricity was then developed. Chipped wood was selected as the wood fuel form since chipping equipment is readily available and easily maintained in the sizes needed for this operation. Also, a chipper purchased for use with wastes can also be used to handle wood produced on an energy plantation. Figure 2 shows the flow of wood fuel at the Yaviza site. Figures 3 and 4 illustrate options for supplying the wood required.

Chipped wood can be used to produce electricity in several ways. Two particular technologies were compared:

1) A conventional stoker fed 300 psig wood fired boiler providing steam to a turbo-generator;and,

2) A new type of wood gasifier which produces gas to power an internal combustion engine driving an electric generator. The technical comparison of data from two suppliers showed that both would operate successfully. Capital costs of both were about the same. However, the wood gas generator/IC engine is

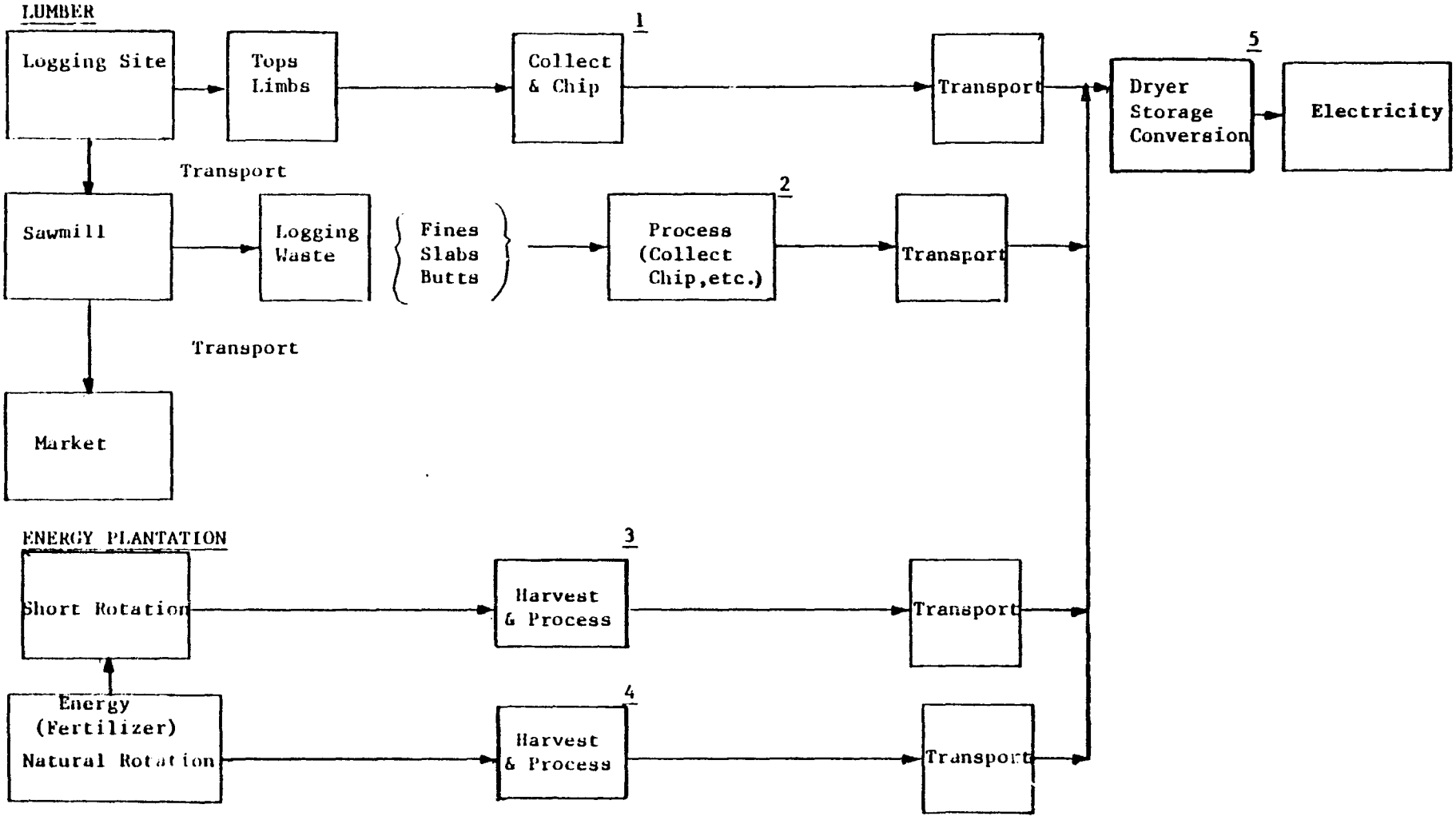

FIGURE 2. WOOD ENERGY SYSTEM FLOW

a) Tops & Limbs

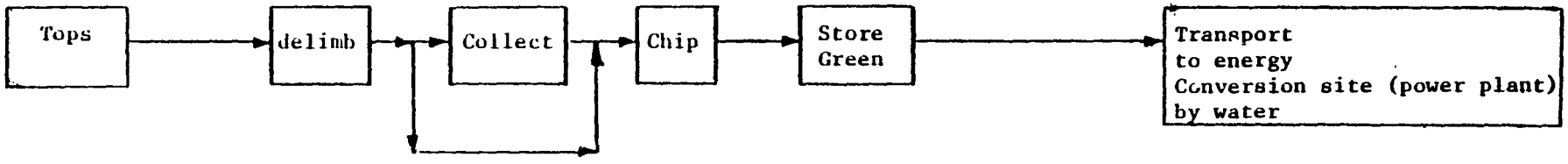

b) Logging Waste

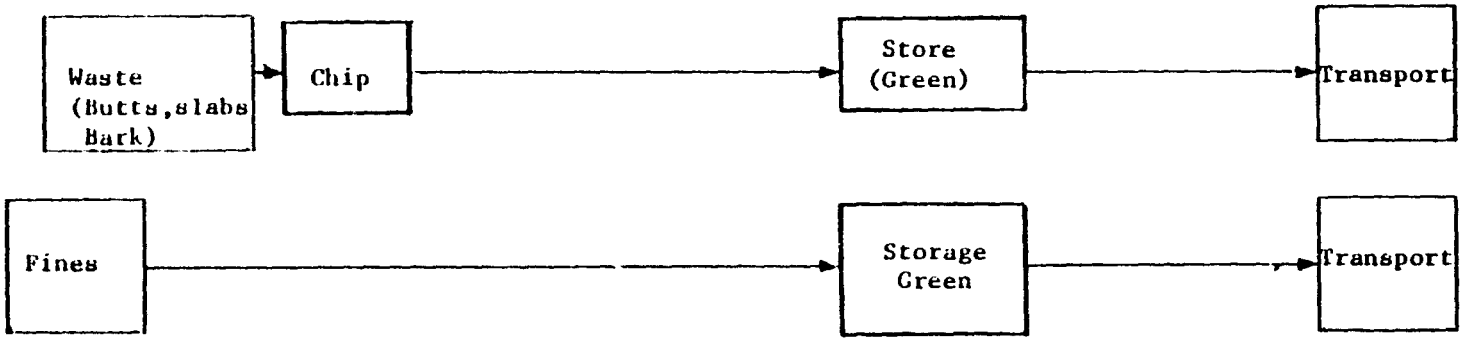

FIGURE 3. MILL WASTE FUEL SUPPLY CONFIGURATION

a) Short Rotation (5-7 years)

a) Planted Site

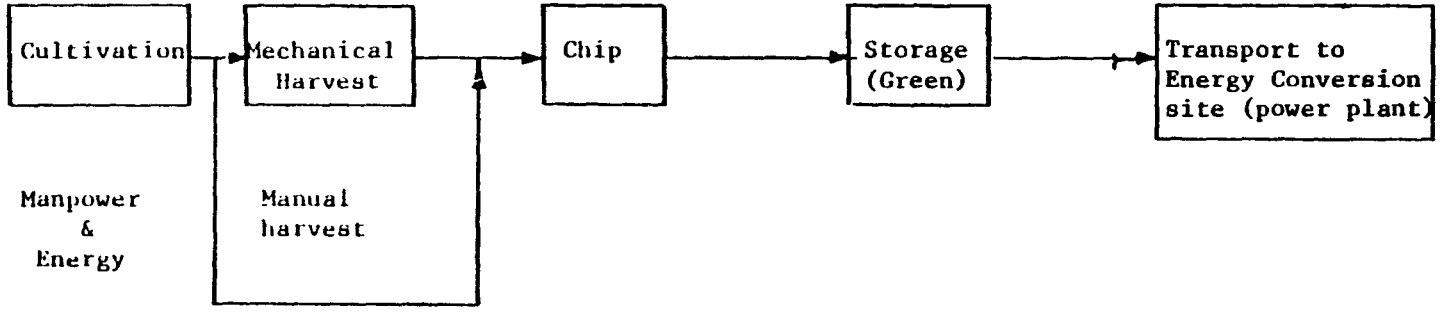

b) Natural Rotation*

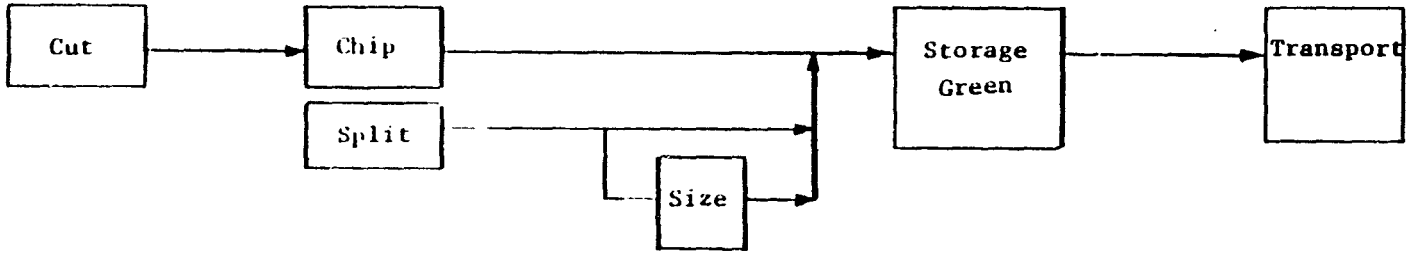

*Dependent on Forestry Consultant Recommendations

FIGURE 4. ENERGY PLANTATION FUEL SUPPLY CONFIGURATION.

still considered to be developmental and installation at a very remote site, such as Yaviza, was not considered advisable. Figures 5 and 6 illustrate system configurations considered in the analysis. Thus, the conventional technology was selected.

To establish system size, current electric generator capacity and utilization history were studied for the electric generator machines now utilized. Operation is on a 16 hr. or 24 hr. basis with system operating status determining the hours of operation. Upon occasion the 135kW machine is operated with one 75kW machine. With this perspective an alternative fueled plant of 120kW would provide sufficient energy for most of the systems' needs. It could operate with backup from existing diesel/electric capacity when additional demand is evident. As 120kW is an off the shelf available item, a plant size of 120kW was selected.

3. Waste Wood Requirements and Availability

In the Yaviza area trees are taken under concession granted by the GOP. At the present time there are a total of 10 concessions. Three of these concessions are sawmills while the other concessions take whole logs. Two of the sawmills operate full time with a month out for maintenance, and the third operates sporadically.

From an interview with Rodolfo Jaen, Forest Engineer, Directorate of Renewable Natural Resources, Ministry of Agricultural Development it was determined that the average monthly 1978 production in the Yaviza area was 719,058 board feet.

Based on this production and using the industry standard of 40% waste material, 34,500,000 lbs., of wood waste is generated per year from the present lumbering operations. Approximately 10,700,000 pounds of wood waste will be required on a yearly basis to continuously provide 120kW of electricity. This equals 31% of the calculated waste presently generated. In other words, a waste collection system needs to capture only 31% of the waste wood to supply all of the fuel needed by the 120kW generator.

4. Transportation of Wood to the Plant.

Transportation poses some difficulties due to lack of roads. However, all of the lumbering concessions are along the banks of rivers which are transitable most of the year for shallow bottomed boats. A small barge and outboard motor will be purchased to enable efficient transportation of the waste wood to the plant site.

Drying, Dry Storage,
Conversion
A Steam Turbine System

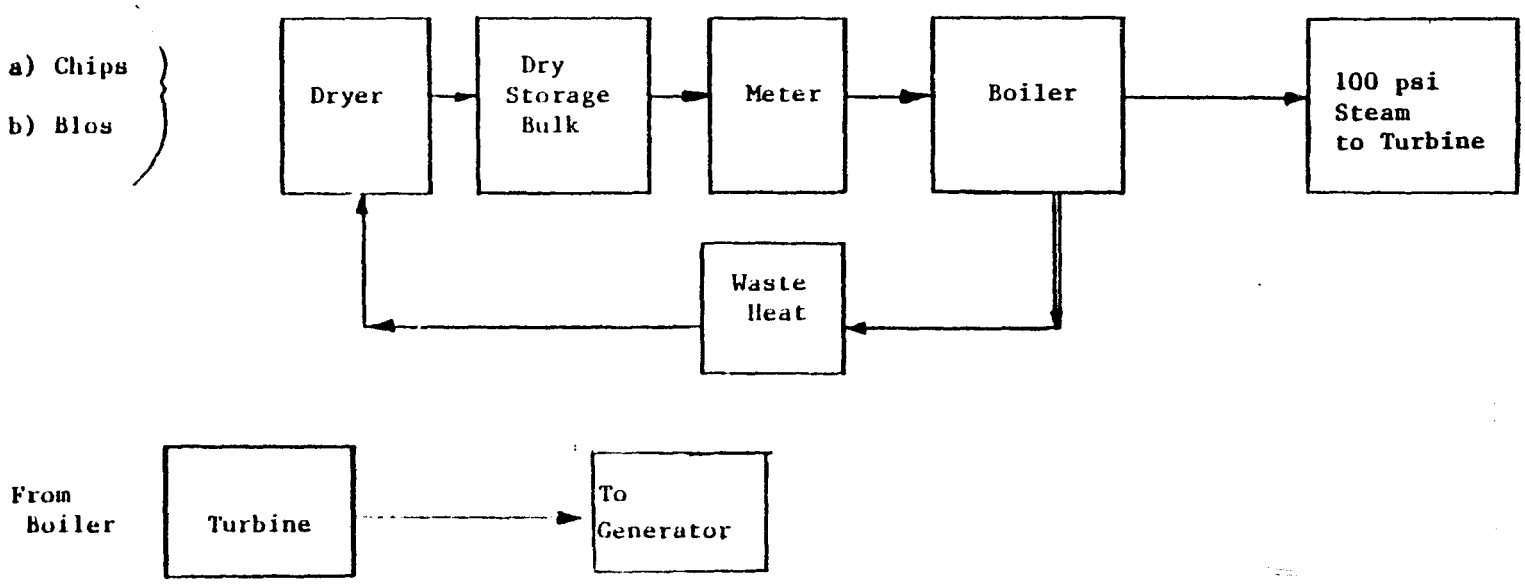

FIGURE 5: (Conventional Boiler/Turbo-Generator Electric Generator)

B Wood Gas - IC Engine

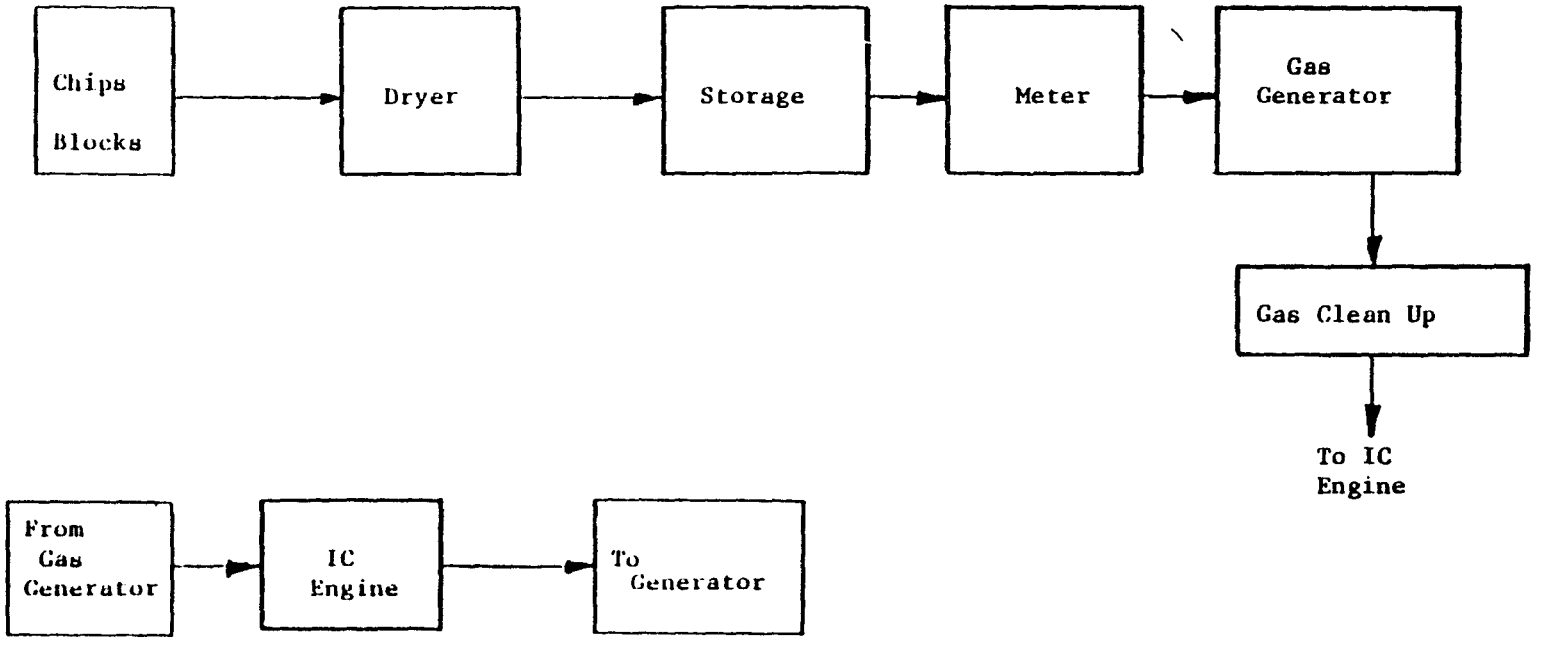

FIGURE 6: Gasifier/IC Engine Turbo Generator

(5) Fuel Supply Enterprise. The "energy plantation" will be designed during the first year of project implementation. Hardwood species of trees, which have commercial value, will be planted. Should the volume of wood wastes be sufficient for continued operation of the boiler, the hardwood species would be culled and sold under concession by RENARE (with IRHE consent) starting around year 15. However sufficient volume would be left to ensure a source of supply for the boiler operation.

b. Operation and Maintenance of the Plant.

(1) Electric Plant. A qualified technician inspected the existing plant at AID's request and found it to be well run and maintained. Installation of the wood fired boiler will involve little change from existing maintenance requirements, except that frequency of maintenance operations will decrease. The major change will be learning how to properly feed the boiler and how to clean it out periodically (every 1-2 years). These operations are within the technical competence of present IRHE employees at Yaviza and they will, with training and operating experience, easily be able to operate the system.

In order to facilitate learning operation and maintenance procedures, a training course and operating manuals on the proposed system will be developed. IRHE technical support personnel (mechanics, etc.) and administrative personnel will also be trained. A two week course should be sufficient for proper orientation of IRHE staff. This training will be provided by the contractor who builds the plant. Maintenance costs on an annualized basis are estimated at $5,000 for labor and parts. No reduction in jobs is contemplated.

(2) Fuel Supply Enterprise. The fuel supply enterprise will involve hiring and training additional personnel to run the "energy plantation". Operation of the enterprise is anticipated to require five laborers and one manager. Training of these laboring personnel in fencing off the area, planting and cutting trees and in the use of chain saws and chipping equipment will require approximately one month. Chain saws are now used by commercial logging operation at Yaviza but the chipping equipment will be new. This training, plus a course for the manager of the operation in financial management, payroll, and small wood handling business will be provided by the contractor. Operating costs for the energy plantation once in full operation, are estimated at $25,000 on an annualized basis (at present prices).

c. Role of Consultants

The contractor selected will be responsible for final design, procurement of equipment, transportation of equipment and personnel to Yaviza, supervising construction, and system test. Also the contractor will assist IRHE and RENARE in planning and setting up the "energy plantation" and will provide training for IRHE technical personnel. The contractor will arrange an internship of at least two months for a RESCU staff member to work on projects similar to this one in the U.S. and attend relevant courses and classroom lectures related to bio-mass development and technology options.

2. Solar Air Conditioning Demonstration Projects

a. Description and Appropriateness of the Conversion Technology.

Solar cooling can be accomplished by both passive and active methods. Active methods include Rankine engine fired coolers and absorption cooling cycles. Both the Rankine engine and absorption cooling use solar heated fluids for power. Solar powered cooling using Rankine engines is still in the Research and Development (R&D) stage and no commercial assembly line equipment is available. The unique attribute of this system is that higher temperatures can be achieved and conventional commercial refrigerants can thus be employed. This allows this system to approach the thermodynamic efficiencies achieved by conventional equipment.

The more conventional and proven absorption refrigeration system has been selected for use in this project. Under this system solar energy will be applied to absorption cooling. This involves heating of an ammonia-water solution by solar radiation in a collector or as is the case in Figure 7 in the generator. This heating continues to the point at which ammonia gas is boiled off. This ammonia vapor flows at point 1 in Figure 7 to the condenser. The condenser, cooled by ambient or lower temperature water converts the vapor to pressurized liquid ammonia. This liquid ammonia flows through an expansion valve at point 2 and expands to a lower pressure in the evaporator. This process initiates evaporation of the liquid thus absorbing heat. It is this absorption of heat which produces cool water for refrigeration. The ammonia vapor produced by the evaporation flows at point 3 to the absorber. In the absorber the ammonia vapor is dissolved in water and the solution process generates heat which must be rejected to a sump of some type. This heat rejection is required in both the condenser and the absorber. The concentrated ammonia-water solution produced in the absorber is pumped at point 4 through a heat exchanger to the generator or directly to the solar collectors. The heat exchanger transfers heat from the weak ammonia solution leaving the collector or generator. As was

FIGURE No.7

SCHEMATIC OF A TYPICAL SOLAR DRIVEN REFRIGERATION SYSTEM

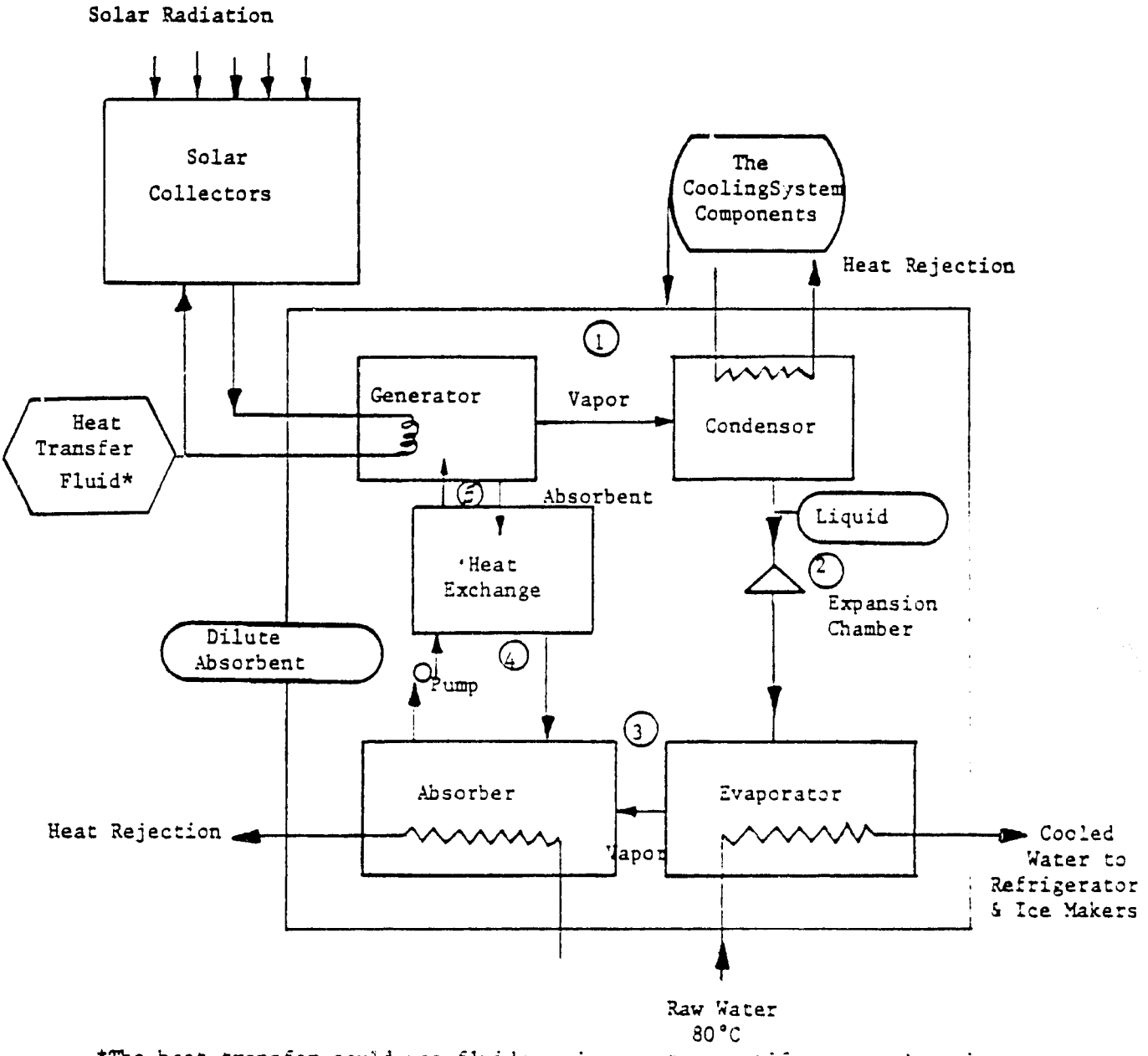

*The heat transfer could use fluids such as water, antifreeze or Ammonia-water. With a fluid such as Ammonium-water the solar collector-generator could be one unit and the ammonia gas could flow directly from the collector to the condensor. The system above depicts an isolated heat transfer loop.

stated earlier point 5 is either to another heat transfer step or directly to the solar collectors.

The flow of fluid in the loop from the absorber through the heat exchanger and solar collectors is similar in function to the compression cycle in a standard ammonia compression type refrigerator. This compression type of refrigeration was once common in the U.S. in small refrigerators. It is still used in large commercial and industrial water chillers. An ammonia compression refrigeration system is currently in use at the government operated onion storage plant on the outskirts of Panama City (near Tocumen Airport).

The absorption cooling process is now commercially available from at least one U.S. manufacturer. This firm now manufactures Standard 3 and 25 ton* units. The refrigerant used in these units is a mixture of lithium-bromide and water. This mixture has a higher heat capacity than water alone and thus can carry more heat from a solar collector to a cooling unit.

Because of their commercial status and a number of other operating and maintenance attributes, the lithium bromide-water 1/ solar powered absorption technology was chosen for the demonstrations in Panama. Additionally, the technology makes use of components which have been manufactured for many years. Butane (gas fired) absorption coolers have been made for many years and solar collectors are also now widely used in many applications. Thus the total system is one which, if desirable, could be totally assembled and even partially manufactured in Panama in the not too distant future.

The solar cooling application now assumes that solar flat plate collectors are the technology of choice for this demonstration. However, it is possible that concentrating collectors will be more appropriate in Chitré or Aguadulce. The selected contractor should be required to specify whether concentrating or flat plate collectors will be better for either or both cooling applications. Based on preliminary calculations, the cost estimate provided in Annex G should be appropriate for either concentrating or flat plate collectors.

The technology will be demonstrated in two modes:

1) In conjunction with a conventional non-solar powered air conditioner and

2) Alone, where through storage of heat and cold it will be expected to supply all the air conditioning needs of an installation.

---

*A ton of air conditioning is defined as the ability to remove 12,000 BTU's/hr. of heat.

1/ Lithium bromide-water solution has the same function as, and similar cooling characteristics to the ammonia-water solution previously discussed.

Neither of the above two applications place unreasonable demands on the technology.

b. Operation and Maintenance Requirements. It is expected that local technicians at Castillero Hospital can be trained by the installer to handle all routine maintenance. At the laboratory in Aguadulce the installation will be slightly more complicated. However, because of the nature of the routine work done by personnel at this installation, it is expected that their existing operation and maintenance skills and capabilities can be supplemented by the installer to the point where they can perform all routine maintenance and repair on the system. This laboratory is involved in demonstrating and transferring a wide range of technologies in fish culture and processing and DINAAC personnel are familiar with mechanical and electrical equipment.

Non-routine major repair, if required, can be performed in Panama City. While solar air condition applications are not yet found in Panama, representatives of the major air conditioning firms including Carrier, York, Trane and Arkla are located in Panama. Thus, maintenance assistance and spare parts can be acquired in or through Panama City. The combination of this back-up, the training of existing operation and maintenance people at the demonstration site and training of at least one IRHE technician in all phases of the demonstration should provide more than adequate operation and maintenance capability.

c. Role of Contractor

The contractor selected for this project will be responsible for the following activities:

1) Final detailed engineering design of demonstration details.
2) Procurement of equipment and delivery to sites.
3) Installation of equipment and start-up
4) Training of IRHE and site personnel in operations and maintenance
5) Development of an operation and maintenance program.

In addition, the contractor will provide a minimum one month internship for the IRHE solar projects manager in similar installations in the U.S. and will arrange attendance at relevant courses and demonstrations.

It is anticipated that a single contractor will be selected to work with IRHE on both the solar cooling and the solar hot water heating demonstrations. As there are many similar components and activities, economies of time and money can be gained by combining these

demonstrations under one contractor. The training requirements for the specific applications are also similar.

3. Solar Hot Water Heating Demonstration Project

a. Description and Appropriateness of the Technology.

The systems to be used are open (thermocycling), involve direct solar heating of the water, are roof located and may be connected to an existing electric hot water tank which can provide back-up heating if and when needed. Approximately, one square foot of standard flat plate collector per 1 gallon of hot water tank storage is required. The intermediate storage required is a minimum of 200 liters. The solar collector will be purchased from a U.S. supplier and the other components purchased in Panama. The solar collector will have an absorber made from copper; the cover will be at least one layer of glass and the design maximum operating temperature will be at least 95°C. This type of collector uses, for the most part, materials now or soon to be available in Panama, and thus, can be manufactured at least in part in the country at a later date. The schematic representation shown in Figure 8 involves the simplest arrangement of components consistent with the uses supplied. This was so arranged in order to eliminate the potential for breakdowns which could not be handled by people at the hospitals or in the villages.

There are a large number of manufacturers of solar hot water heating components and systems. There are also many years of performance data on the systems. The solar radiation data available for Panama summarized in Annex H.7 inidicates that hot water heating is possible in almost every location in the country. Because hot water demand is not established in some sectors of the economy, especially in residential uses, the introduction of solar hot water technology will be easier than in other places in the world. Also because of the temperate climate the amount of hot water needed for residential uses will be small. These factors coupled with the rising costs of electricity will help to make solar hot water heating both functional and economic.

The five applications selected for the demonstrations will require small amounts of hot water for indirect medical uses such as dish washing, clothes washing, laboratory glassware cleaning, cooking, etc. Because these functions are now being performed without hot water, the possibility of fluctuations in amount and temperature of hot water should be no problem. Because the systems are demonstrations, a number of cost items are higher than they would otherwise be; and, because none of the locations now have hot water, the electricity usage and operating cost estimates are very rough. If electricity uses or costs are higher, the pay back period would be shortened.

FIGURE 8

TYPICAL ARRANGEMENT FOR SOLAR ASSISTED HOT WATER HEATING FOR HOSPITAL USE

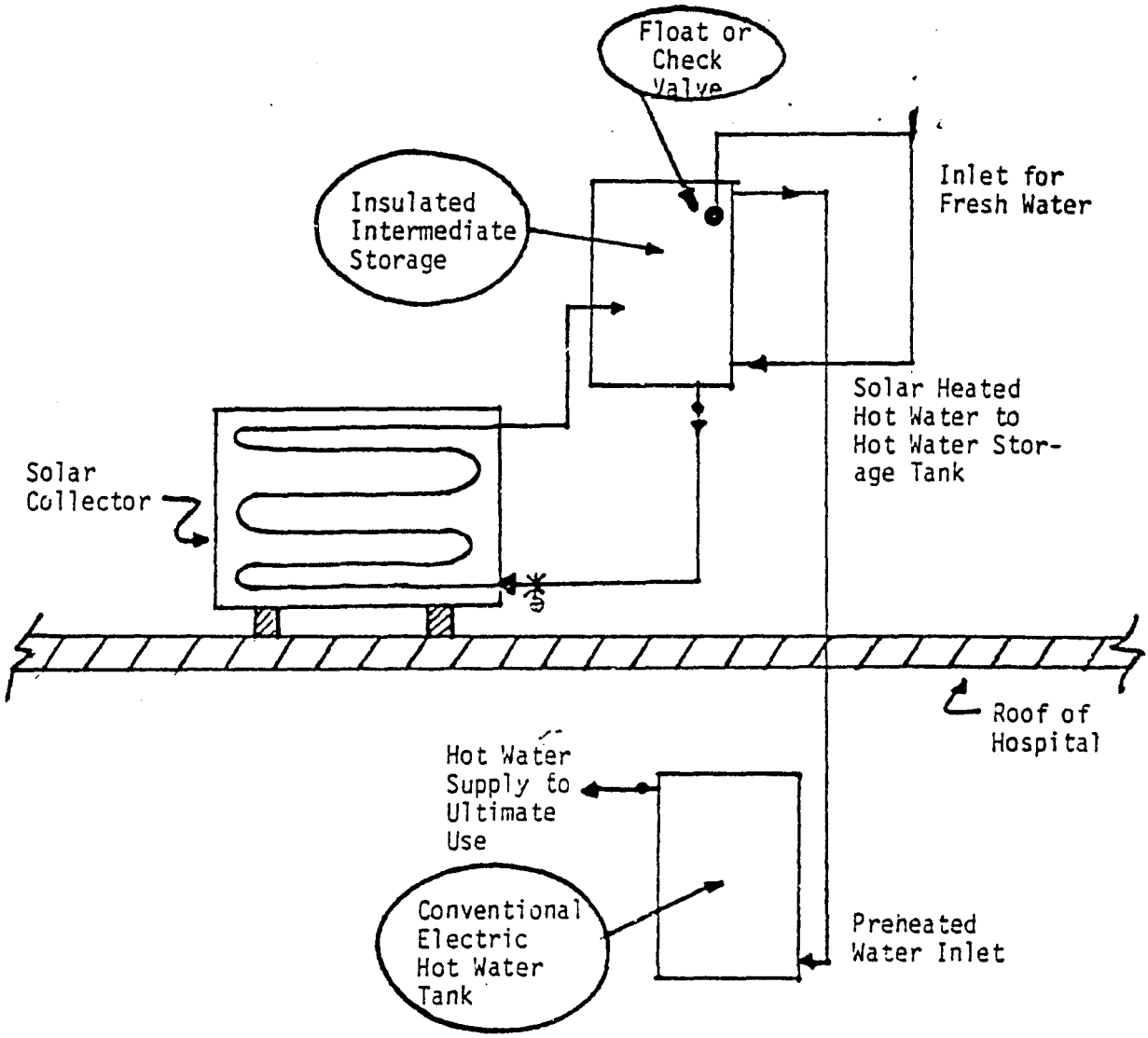

From both a social and economic perspective, solar hot water heating is beneficial in these locations and for these uses. Five project locations were selected in order to place applications in various geographic locations in the country. This placement will allow for faster replication when the advantages of the systems are demonstrated.

b. Operation and Maintenance Requirements. The main maintenance requirement is to check the systems weekly for leaks, malfunctions or other problems. In addition, if the water has high hardness, alkalinity or solids content incrustation might be a problem. Thus, periodic cleaning of major systems components may be necessary. All of the hospitals and health centers have maintenance personnel. They will be trained under the project to carry out these functions. The time and skill levels required are minimal and no difficulties in their ability to provide maintenance are foreseen. The IRHE project manager for solar applications will also be trained in system operation and maintenance. Should non-routine repairs be required, this person will be responsible for ensuring that these repairs are effected, either on site or in Panama City.

c. Role of Contractor. The contractor selected for this project will be the same as the one for the solar air conditioning applications. The list of five contractor responsibilities presented in the technical evaluation section for the solar cooling project will also apply to this demonstration. The contractor will be responsible for purchase and shipping of system components, installation of one system, training and system testing for all units.

4. Photovoltaics

a. Summary Description and Appropriateness of the Technology.

The repeater station will require 120 watts of peak power. Under the project, a 150 watt photo cell array will be installed. This should provide enough energy to transmit to over 80% of the Veraguas Province. The system will consist of (A) solar array, (B) batteries, (C) transceiver, and (D) radio antenna as shown in Figure 9.

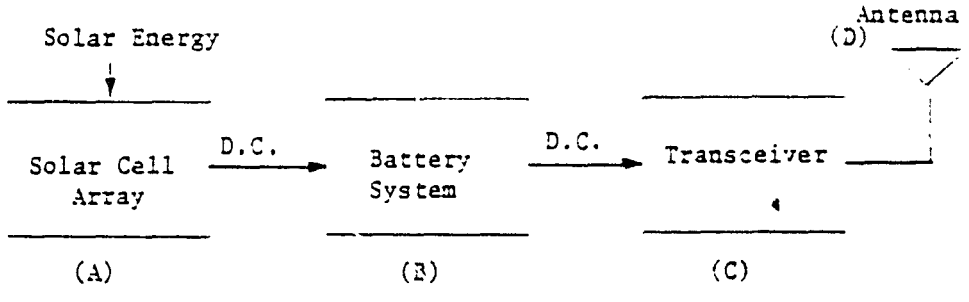

The solar energy converts direct sunlight into direct current to charge the batteries. This in turn powers the repeater radio. The energy requirements for the repeater are 10 Amps. D.C. in the transmitter mode and 2 Amps D.C. in the receiving mode, which requires about 120 watts of peak energy power.

Taking the annual radiation national average of 400 langleys/day and assuming 12% for the solar cell energy capture efficiency, approximately 1.2 mts.^{2} of solar cells will provide the energy needed to provide 1.2kWh of electrical energy for radio transmission and energy for lighting. This is enough for 8 hours of continuous use. The system is oversized for, although it will only be used in intermittently for a few minutes at a time, it will capture energy only five hours a day at a maximum but must operate on a 24 hour a day basis. A standard battery pack of 20kWh storage will also be necessary.

b. Operation and Maintenance Requirements.

The system is virtually maintenance free. The solar array must be cleaned and the battery checked periodically. The battery will need replacement every 5 years or so. The repeater operates automatically and no operator is required. The maintenance tasks require a few minutes of training. These tasks will be carried out by one of the teachers from the school closest to the site of the installation. IRHE will be responsible for checking the system periodically and for providing a replacement battery when needed.

c. Role of Contractor.

The contractor will be responsible for installating the system and leaving it in working order. He will also train IRHE personnel in maintenance and repair and a few school teachers in maintenance.

5. Bio-Gas

a. Summary of Description and Appropriateness of the Technology.

A Bio-gas plant can be fueled by a combination of such substrates as animal and human excrements, slaughterhouse wastes, and crop wastes. The product produced from these wastes are Bio-gas and sludge. The quality of raw material needs to be monitored to control the level of impurities in the gas produced. The mix of materials requires care to ensure production of a sludge rich in nitrogen for use as a fertilizer or animal feed supplements.

1. Bio-gas Production Process 1/

There are two kinds of Bio-gas production processes -

1/ This discussion based on "The Potential of Biomass Conversion for the New Mexico Agribusinessman", by M.D.Kemp, G.L.Mauldin, W.C.Hull, Copy right 1978, New Mexico State University.

batch processing and continuous feed. The batch-type digester is filled with raw materials for a certain period of time. The gas is drawn off and the sludge accumulates in the bottom of the digester. Periodically, the sludge is removed and utilized. Because of the applications selected the Bio-gas systems of this project will be continuous-batch processors. This system requires daily addition of raw materials.

After the animal waste is collected, the material is placed in a mixing tank (galvanized steel tank modified with a mixing motor) where it is combined with water. The Bio-mass is mixed with hot water to avoid lowering internal digester temperature (See Figure No. 10). The mixing ratio of 3 parts volatile solids to 17 parts water produces the most gas. After the mixture of slurry appears uniform, it is channeled through a sand trap to remove solids and grit. As large a percentage of grit as possible is removed prior to placing the slurry in the digester since it contributes nothing to the effectiveness of the anaerobic process.

Following the sand trap the slurry is placed in the digester. A digester made of a flexible rubber material such as industrial pond liner will be used, since it is a less expensive material than concrete or steel and it can be placed in the ground without a structural frame. The top of the digester will have an insulation layer, and the heat from the digester will dry the surrounding soil thereby forming a completely insulated area to maintain a constant internal temperature of 35°C (95°F). To aid in temperature control, hot water from a Bio-gas fueled hot water system is circulated through piping beneath the digester.

The slurry is then fed into the bottom of the digester. As it has lesser density than the settled sand and sludge it will rise and come in contact with the bacteria-active material to produce methane and carbon dioxide. To ensure that no air gets mixed with the methane (which would produce the possibility of an explosion) the roof of the digester is designed to increase and decrease with digester volume. After digestion by the anaerobic bacteria, the new material accumulates in the bottom of the digester in the form of sludge and the gas, which does not combine with water, collects in the upper part of the unit. As the heated Bio-gas contains moisture, water is eliminated from the gas by using a simple, condensation trap.

Another by-product, which will cause corrosive damage and needs to be removed is hydrogen sulfide. Hydrogen sulfide will be removed from dry Bio-gas by filtering it through a mixture of ferric oxide and wood shavings. The ferric oxide is easily processed for reuse.

FIGURE No.10: BIO-GAS PRODUCTION PROCESS

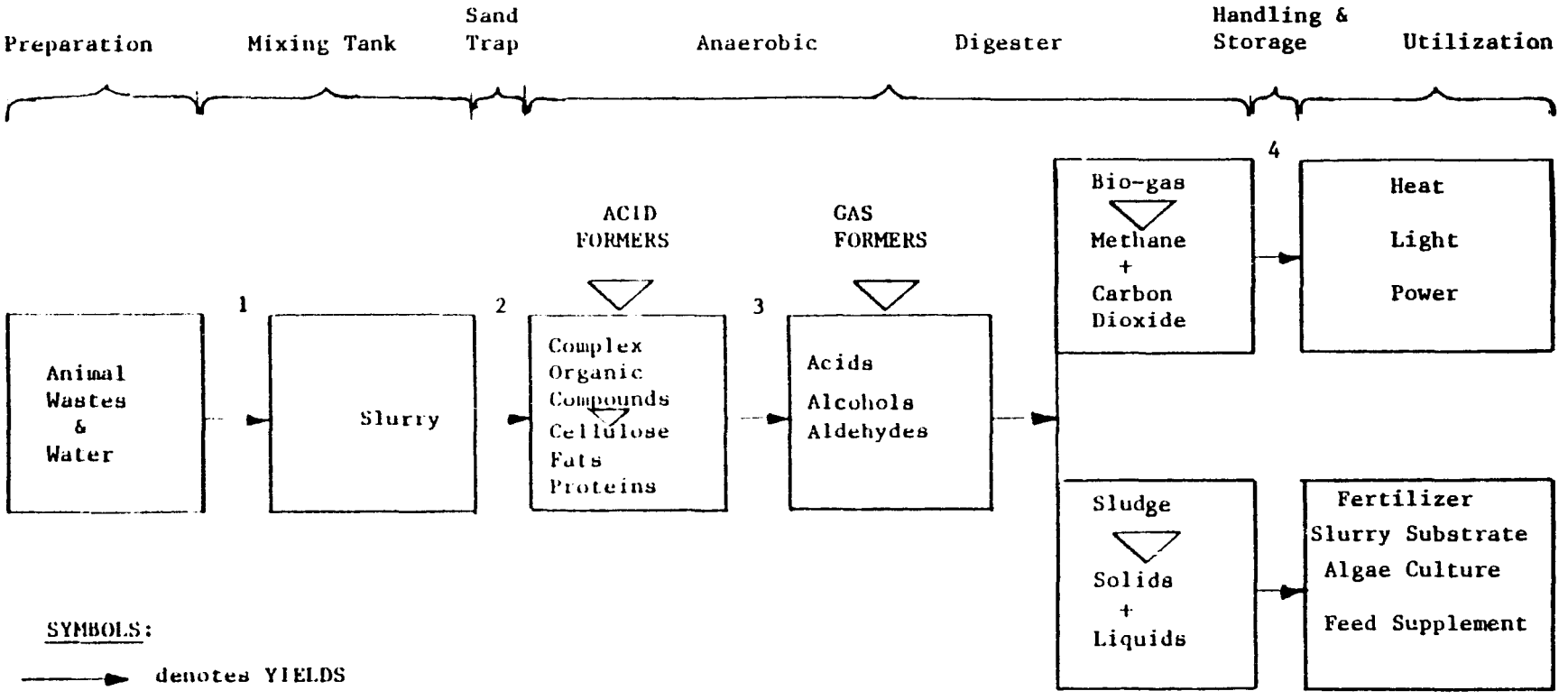

SYMBOLS:

→ denotes YIELDS

▽ denotes COMPOSED OF

DESCRIPTION OF BACTERIAL ACTION

1. Mixed to form slurry
2. Slurry channeled through sand trap to remove grit and solids
3. Decomposition of Organic compounds form organic acids.
4. Remove water and hydrogen sulfide from gas.

The gas is stored in an expandable-volume container with a waterseal until used. The container should provide sufficient pressure to enable on line use of the gas. Should the pressure be insufficient, a compressor may be required to permit proper gas flow (to the stove, waterpump, etc.).

Several designs were considered for the bio-digester. The system described above was chosen largely because it can be easily constructed and adapted to other sites. Other designs call for use of metal drums or concrete containers, which are more expensive than the system selected. The equipment (mixer, sand trap, ferric oxide filter and gas storage container were added to minimize potential operational difficulties. Temperature and acidity control systems are also included to ensure maximum production of gas.

The systems were sized by calculating the volume of gas needed for the proposed application. For the Asentamiento, 1128 cubic feet day are required and for the Caimito Production School (Instituto José Reyes Vásquez) 1100 cubic feet/day are needed.

b. Operation and Maintenance Requirements.

The operation of an anaerobic digester is traditionally labor intensive and requires large amounts of raw materials for practical gas production. The proper amount of raw materials must be added in the correct ratio and temperature, and acidity must be maintained within the narrow range required for proper operations. If anything goes wrong with the operation, the entire system must be cleaned out and the operation started again. Scum buildup must be removed and remaining grit which is not taken out by the sand trap, must be flushed out. Finally, air must be kept out of the system or the gas will be ruined. In an extreme case it could explode.

Despite all these potential pitfalls, the operation and maintenance activities are not difficult and do not require high skills levels. Daily attention is required, however.

The operations will be carried out by members of the Asentamiento and students at the school. They will receive training from the contracted adviser on proper operation and maintenance. The adviser will also provide a maintenance manual. The IRHE project manager, a DINAAC engineer and a teacher at the school will be trained as technicians. These individuals will be responsible for monitoring system operations and problem solving. The adviser and IRHE project manager will be on site during construction and start up, and the former will visit the sites weekly for the first few months to keep track of progress.

The equipment used in the system is durable and near maintenance free. IRHE will be responsible for fixing equipment that cannot be repaired on site. The maintenance budget for the first year is zero and is calculated at $100 per year thereafter.

c. Role of Contractor.

A biogas adviser will be needed for approximately three months to advise IRHE on all aspects of final design and project implementation. His responsibilities will include:

- Provide a working design, sized to each of the 2 demonstration projects. The design will include equipment and materials specifications and expected performance for both the digestion unit and use unit.
- Advise the IRHE Project Manager on construction of the Bio-gas units.
- Provide guidance to the IRHE Project Manager on design procedures, hands-on construction and practical applications of Bio-gas.
- Provide training for all operation and maintenance personnel and technicians.
- Develop an operation manual and train operators and maintenance personnel on trouble shooting procedures.
- Establish a general maintenance schedule.

ECONOMIC ANALYSIS OF DEMONSTRATION PROJECTS

All the subprojects have been subjected to least-cost comparisons with other traditional and available energy sources. The customary discount technique is used to adjust cost flows to their present values so that proper cost comparisons can be made. A 15 year project period and 15% opportunity cost of capital is assumed.

The financial and economic costs are assumed to be equivalent since no duties, taxes, subsidies, etc. were knowingly included in the cost figures. There is, however, some indication that bottled gas is subsidized, albeit at some unknown rate. To the extent that it is subsidized, the economic analysis would show solar applications to be more competitive with gas than would the financial analysis. Sensitivity analysis is used for estimating the impact of higher gas (and electric) prices. The results of this sensitivity analysis indicate that the bottled gas subsidization would have to be substantial-on the order of 100%- to change the conclusion reached using existing market prices. In several of the sub-project analyses fossilfuel prices are assumed to rise by 5% a year to reflect past and expected future experience. To underscore the difficulty in estimating future prices, as the final draft of this PP was being completed, it was learned that it is quite likely that in June 1979 bottled gas prices will rise by 25%, with smaller rises expected for other fossil fuels.

In summary, bio-mass generation of electricity is competitive with diesel generation in those areas where the bio-mass, in this case wood, has no alternative use. Solar airconditioning is competitive with conventional air conditioning systems in those areas where electricity is produced by diesel generation, but is unlikely to be competitive in those areas served by the national electrical grid, unless there is a striking change in pricing policy. Solar hot water heating should be competitive at existing prices with both electrical and gas units as long as daily usage is above 240/320 gallons. The photo voltaic application provides an excellent example of its use in remote areas where traditional energy costs become exhorbitantly high. Of all the subprojects, the bio-gas subprojects are the least competitive with traditional energy sources; yet it does not seem unreasonable to assume that they will become competitive in the future as fossil fuel prices rise and design costs fall.

A. Bio-Mass Demonstration Subproject

To test the economic feasibility of bio-mass generation of electricity (wood fuel in this specific case), the costs per kWh generated by the system were compared to those that would be incurred in replacing one of the old existing diesel generators with a new one. Two cases were developed: Case I compares the cost of generating electricity 24 hours a day at the maximum output of 120 kWh. In contrast, Case II assumes somewhat more realistically, that the systems would, for various reasons, operate at less than full capacity. For this latter case the systems are assumed to generate 75 kWh for 16 hours/day. The cost of fuel for the Bio-mass generator is assumed to be zero since it has no currently known alternative use.

For Case I the present value cost/kWh for the diesel generation is $0.0454 while for the Bio-mass system it is $0.0271/kWh. For Case II the values are $0.0744/kWh for the diesel system and $0.062/kWh for the Bio-mass system. In both these cases fuel and lubricant costs are assumed to rise by 5% per year for the 15 year project period. If constant fuel and lubricant costs are assumed, the results for the two cases are: Case I $0.04/kWh and $0.03/kWh for diesel and Bio-mass respectively, and Case II, $0.01/kWh for both systems.

Since fuel costs can be expected to rise, and future Bio-mass capital costs/kWh can be expected to fall, Bio-mass generation of electricity appears to offer a viable least-cost alternative to diesel generation.

B. Solar Air Conditioning Demonstration Projects

1. Chitré-Hospital Cecilio Castillero

The air conditioning system originally installed in the hospital consisted of two 6-ton Carrier air conditioning units. Currently, however, one unit is not working, and has been so cannibalized in order to repair the other unit that it is beyond repair. Since the one Carrier unit does not provide adequate cooling for the hospital, we assume that the authorities are interested in rectifying the situation with the lowest cost outlay possible. Two alternatives seem reasonable: replacing the broken unit with another similar Carrier one, or with a solar unit. For purposes of the anlysis we assume two alternative systems: (1) a system consisting of two 6-ton conventional air conditioning units; and (2) a system consisting of one 6-ton conventional air conditioning unit and one solar unit.

As designed for this project, the demonstration solar unit is approximately 25% more costly than the systems that are expected to be used once the demonstration project proves the technical feasibility of using solar units for cooling purposes. The extra costs result from the use of "top of the line" rather than "middle of the line" quality components, and the stocking of a larger than normal amount of spare components in order to decrease the probability of component failure, and to be certain to avoid potential delays in demonstrating the project's technical feasibility. While fewer and lower-cost components most likely could be used without any deleterious impact on the demonstration project, the potential long-run cost to the Panamanian economy resulting from project failure due to inadequate planning is believed to more than justify the higher short-run solar unit cost. Thus, for purposes of analyzing the general feasibility of solar cooling units, the more realistic cost of $34,000 is used rather than the $42,930 to be incurred under the demonstration project.

To compare the costs of the two systems, we assume that each system provides the same amount of cooling by working thirty hours. The first system is controlled by a thermostat which, it is assumed, will lead to 30 hours of conventional airconditioning use. The second system's conventional unit is assumed to operate twenty-four hours a day while the solar unit operates six hours daily. The solar unit thus saves six hours of electricity use daily, less the electricity used to power its waterpump.

Given the kWhs expended by each system and the capital costs of the cooling units, electricity would have to cost $0.39/kWh for the conventional/solar system to be competitive with the conventional system. For the specific sub-project, electricity is available from the national electrical grid at a cost to the user of approximately $0.09/kWh. At this cost level, the conventional/solar system is obviously not competitive with the conventional system alternative, and could only become competitive if the cost of the solar unit fell by 62%. While there may be some electrical cost subsidization occurring, there is not enough information available to estimate it. Even at a doubled cost of diesel fuel, the cost of the solar unit would need to fall by 43% to be competitive. It would thus appear that at existing price levels, solar cooling units will not be viable alternatives to conventional cooling units in those cases where there is access to the national electrical grid.

However, for those areas that depend on high cost diesel generated electricity, the conventional/solar system appears to have excellent potential for being competitive with the conventional system. Information on the 1978 operating costs of 34 IRHE owned diesel electrical generating plants indicates that the cost per kWh can range from $0.11 to $0.86. These figures include an additional 18 1/2% above the IRHE cost figures in Annex H. 4 in order to capture maintenance costs. At present time there are eight systems with costs greater than the demonstration project's $0.39/kWh/cost. If we assume a 25% change in the cost of the solar unit due to innovation and reduced production costs, the solar unit would be competitive in three more areas. And given that the IRHE cost/kWh figures do not reflect capital costs of the generating units, two other areas probably have costs/kWh higher than $0.39. If we then add the quite likely large future increases in diesel fuel costs, it would seem reasonable to assume that several more areas could potentially support solar units. In addition to these 34 owned and operated IRHE systems, IRHE also maintains 24 community owned diesel systems with similar cost structures. Hence, while the demonstration project itself may

not be justifiable on economic grounds, it does appear to be justified on demonstration grounds given the large number of areas in Panama where the conventional/solar system could be justified.

2. Aguadulce - Laboratory

Two airconditioning systems were considered reasonable alternatives: (1) a two ton conventional unit; and (2) a three ton solar unit (the smallest commercial unit currently available). It is estimated the thermostat-controlled conventional unit will operate twelve hours a day. The solar unit is assumed to provide the same amount of cooling as the conventional unit, though possibly with wider temperature ranges over the course of a day. While there may be a few cloudy days in a year when the solar unit cannot provide as much "cooling" as a conventional unit, the slight difference in quantity of airconditioning supplied is not considered significant to effect the analysis.

Application of the same analysis to this sub-project as was applied to the Chitre sub-project yielded the following results:

1. With a cost of $0.09/kWh for electricity, the cost of the solar unit would have to fall by 57% for it to be competitive with the conventional system. At a cost of $ .18/kWh the percentage decrease would have to be 37%.

2. The solar unit would be competitive with the conventional unit in those areas served by diesel generated electricity costing at least $0.33/kWh.

3. The solar unit could currently be competitive in at least 12 areas being served by diesel systems.

C. Solar Hot Water Sub-project.

Three alternative methods for heating water were chosen for cost comparisons: solar, electric and gas. Daily water demand is the critical variable. Costs are estimated at three usage levels: for the La Palma site 80, 160, 240 gallons per day (80 gallon tank); and for the remaining sites 60, 120, 180 gallon (60 gallon tank). The solar units are assumed to have the capacity to produce these quantities of hot water. As with the air conditioning subprojects, we assume the solar unit costs are 80% of the demonstration subproject costs.

For 60 or 80 gallon usage per day, the gas unit is the cheapest; with the solar unit the most expensive. For a daily usage of 120 or 180 gallons, solar becomes cheaper than electric, but gas still remains the cheapest. At current energy prices, the solar unit becomes the least expensive of the three systems once a daily usage rate of 240 or 320 gallons is attained. The above analysis assumes that financial and economic energy costs are equivalent, and constant over time. The information currently available, however, indicates that energy is being subsidized at some unknown rate, and there is little doubt that the cost of fossil fuels will be rising substantially over the next few years. Thus, if we assume, for purposes of sensitivity analysis, that the economic cost of electricity and gas are double the current prices actually being paid, the solar units would become competitive, from the economy's perspective, with the electrical units at the 60 and 80 gallon usage level.

Though daily water usage at each site is not known at this time, it seems reasonable to assume that it will be at least in the 120-160 gallon range, and more than likely, much higher. There appears to be little doubt, then, that the solar units will be the least cost alternative to hot water heating.

D. Photovoltaic Demonstration Sub-project.

As discussed elsewhere, repeater stations are needed in the mountains northern part of Veraguas to provide adequate single side band (SSB) communication radio coverage to the group of small communities in the region. However, the lack of an inexpensive energy source to power the repeater station has stymied its development. The closest source of electricity is some 40 Km. distant. To bring electricity that distance would cost more than $100,000. The use of gasoline or diesel generated electricity is impractical given the site's isolation. In contrast, a photo cell array can be installed for $13,500 and is virtually maintenance free and automatic. Because of the clear cost advantage, no further analysis is necessary to justify its use.

E. Bio-gas Demonstration Projects

1. Water Heating and Cooking

To test the economic feasibility of using bio-gas for heating water and for cooking fuel, its costs were compared to that of LPG bottled gas used at the Ciclo Básico in Caimito. It is estimated that 200 gallons of water are heated daily and that two tanks of LPG gas are used per month. At these consumption levels the present value cost of the anaerobic digester system would be $12,208 while the bottled gas cost would be $7,246. With the current costs, the present project quite obviously cannot be justified on

economic grounds. However, a combination of falling bio-gas digester system costs, and a faster rate of increase in the price of LPG gas than is used in the above analysis, could well lead to bio-gas becoming competitive. In addition, once the technology is proved feasible, large scale systems should be more efficient than the small one used for the demonstration project, and should be able to supply a larger volume of gas. Hence, with economies of scale and larger bio-gas supply, it is likely that the bio-gas system can become competitive with LPG gas.

2. Water Pumping

The cost of using bio-gas to fuel an internal combustion engine for pumping water is compared to the operation of a small scale, gasoline-powered water pump. At current gasoline prices, the present value of the costs are $12,363 for the bio-gas pump system and $8,342 for the gasoline driven pump. Assuming a 5% yearly increase in conventional fuel cost over the 15 year project period, the cost of the gasoline pump system rises to $10,691. With the replicability of the bio-gas technology, costs should fall enough to make it competitive with gasoline applications.

Note: A copy of the calculations on which this analysis is based have been sent to LAC/DR files and are also available at USAID Panama.

SOCIAL SOUNDNESS ANALYSIS

I. Profile of the Rural Poor

A. General Characteristics of the Rural Poor[1]

According to an analysis carried out for the FY 1981 CDSS, some 512,000 people, or approximately 57% of Panama's rural population are currently living in conditions of poverty. The rural poor, while distributed throughout Panamá, are most heavily concentrated in the central and western Provinces of Veraguas, Chiriquí, Coclé and Herrera. There are also smaller concentrations in the Provinces of Darién and Bocas del Toro as well as in outlying rural areas of the Provinces of Panamá and Colón.

Most of the individuals characterized by this analysis as poor are living in conditions of extreme isolation. Access to main roads, population centers, and basic health and agricultural services is limited. Residents of these areas tend to be highly dispersed and population densities are very low (12 people or less per square kilometer). Roads where they exist, are for the most part unpaved and many cannot be traversed during the rainy season. For the inhabitants of many of these areas, the key modes of transportation are boat (primarily dugout canoe), animal, or foot. Trips from home to the nearest town can take as long as four to six hours.

The majority of Panama's rural poor are subsistence farmers and day laborers. Their land holdings are small (in 1970, 34% of Panama's farms were 10 hectares or less) and the terrain is for the most part hilly or jungle. The majority of the soils are of poor quality and unsuitable for sustained agricultural production without sizable investment. Principal crops include corn, rice and sugar cane. Rice accounts for 43% of the grains production on farms 10 hectares or less, and corn for 44%. In addition, sugar cane accounts for 13% of total production. Most poor farmers continue to use slash and burn techniques to clear land for cultivation and use of mechanized power is limited. Forest lands, once abundant in many of these areas, are quickly becoming denuded as farmers clear the land for cultivation and sell the cut down trees or use them for firewood. The result is that large areas

---

1. Both the rural and urban poor are part of the project's target group. A fuller description of the general characteristics of both groups is contained in the 1981 CDSS for Panamá. This section summarizes the description of the rural poor contained in the CDSS.

of the country have advanced levels of erosion - a problem that is assuming alarming proportions.

Recent data on living conditions in areas with high concentrations of the rural poor indicate that the majority have per capita annual incomes of $300 or less. The majority of these families produce primarily for their own consumption, have earnings of $500 a year or less from sale of produce and earn the rest of their cash income from off-farm employment. Living conditions are definitely substandard. According to the 1970 Population Census most houses in these areas had one room with a lean-to kitchen and very few houses (between 10 and 20%) had an approved water source. Less than 20% had approved sanitary facilities (e.g., letrine, septic tank, indoor plumbing).

Although there has been significant improvement in delivery of basic services to rural Panamanians in general over the past decade, access to health services in isolated areas remains minimal. In 1977, the number of doctors for every 10,000 people in these areas was one or less, and most births (68%) were still unattended by either a physician or a nurse. Access to basic education services, although continuing to increase significantly, is still limited to the primary grades. While the younger population is taking advantage of these services and school attendance levels are high, significant portions of the adult population between the ages of 15 and 39 (as high as 70% in some districts) are still illiterate. Of the remaining adult population, most have had no more than two or three years of schooling.

B. Energy uses and needs of the rural poor. Energy is used directly or indirectly by the rural poor in both consumption and productive activities. Electric energy is used in both. In 1970, the vast majority (90-100%) of the rural poor lacked electricity. Most household lighting in isolated rural areas (approximately 90%) is still done with kerosene and the basic cooking fuels continue to be wood and charcoal. For individuals living in small rural towns and on asentamientos, the picture is somewhat better. Most have access to electricity, although service is at times irregular. In more isolated areas, electricity is produced from diesel generation, usually for a part of the day. In productive activities, mechanized power is the principal energy use. Many asentamientos and cooperatives have or rent tractors, threshers and other diesel fueled farm machinery, but mechanized power is still beyond the reach of most small farmers. Perhaps the greatest need in agricultural production is for irrigation. At present, irrigation is feasible mainly for those farms that are served by a spring, a stream and/or electricity. These sites are largely in the hands of richer farmers. For post harvest activities, the cooperative federations and a few individual affiliates have their own coffee and rice mills and storage facilities, but most small farmers sell their products

to middlemen or processors, often at below market prices or at prices discounted for high moisture content or spoilage. Processing and storage of agricultural products require significant amounts of energy, and higher energy costs will continue to put pressure on prices paid for raw materials, given Panama's price regulation system. On the consumption side, firewood is becoming increasingly scarce in the areas where the majority of small farmers live, causing farmers to shift to non-renewable resources (e.g. kerosene, gas) whose prices are beginning to increase rapidly. Finally, energy is used by the many government and private institutions that provide services to the rural poor. To the extent that energy costs rise the cost of these services is likely to rise and/or the quality diminish.

C. Organization of the Rural Poor into Productive Units.

Over the past 10 years the GOP has attempted to promote the organization of the rural poor into productive units. The basic philosophy underlying this effort is that delivery of basic services is both more feasible and cheaper if people live closer to one another. In addition, it is believed that by being organized into units for purposes of agricultural production, on-farm productivity will be higher.

Since 1969, some 180 asentamientos (agrarium reform farms) have been organized. These farms are located mainly in Veraguas and Chiriquí Provinces. There are usually from 20-50 families on an asentamiento and the total number of families is around 7,000. Agricultural activities on the asentamientos are usually carried out on communal plots. Some of them also have private plots. The crops produced vary according to the location of the asentamiento and soil quality. The majority cultivate basic grains (rice, corn and sorghum), some produce beans, and several are now starting beef, dairy and poultry activities. The asentamientos have access to production and investment credit through a special fund managed by the Agricultural Development Bank (BDA). Another form of productive unit that has also received GOP support in recent years is the cooperative. There are currently some 31 production cooperatives which have a total membership of approximately 7,000 farmers. Most are located in the Provinces of Chiriquí, Veraguas, and Los Santos and membership ranges from 25 to 1,500 families. These coops are affiliated with the Federation of Agricultural Coops (COAGRO). Another federation - the Association of Savings and Loans Cooperatives-has 37 rural affiliates with a total of 16,000 members. Both federations provide loans for agricultural production to members and are increasing their loans for investment purposes. Their lending resources have increased by some $6 million over the last few years, partially financed with resources from AID Loan 525-T-041, which is now in its final stage of disbursement. Technical and support services for the coops have also been improved. A follow on loan is planned. In addition to providing these services, COAGRO also serves as marketing agent for products grown by members and

supplies them with agricultural inputs, often at significant savings. Several of the more successful affiliates now have their own farm machinery which they rent out to their members at reasonable rates, and a few have grain drying and milling facilities. The above groups (asentamientos and cooperatives) reach a total of about 30,000 families, the large majority of which are among the 90,000 families that make up AID's rural target group.

Another type of productive unit which is organized more for institutional purposes than to make advantage of potential profits is the basic cycle or production school. Currently there are some 86 production schools which serve as the equivalent of vocational junior high schools. Students spend much of their time out in the fields on experimental plots and learn new and improved techniques for planting, harvesting, storing and marketing agricultural products through classes and experience. The profits achieved by marketing the schools' products are used to maintain dormitory facilities and finance additional agricultural operations. These schools are still being constructed (partially financed through AID Loan 525-V-043) and will eventually reach most of the country's future farmers and agricultural sector entrepreneurs.

Finally, all target group members are reached, at least indirectly, by the country's 505 local government townships (corregimientos). A locally elected representative presides over the local government (junta comunal), sits on the municipal council having jurisdiction over the corregimiento, and is a Representative to the National Legislative Assembly as well.1/ One of the Representative's key functions is to maintain communication with GOP agencies who assist in promoting local social and economic development. The township governments (juntas comunales) each receive a yearly investment budget of $100,000 from the GOP for projects of economic and social benefit. These resources are backed up by loan funds from the Municipal Development Fund (FODEM) partially financed by AID Loan 525-T-044.

II. Project Beneficiaries and Potential Benefits

While the technologies that will be demonstrated under this project are relatively simple, some access to capital will be required to enable target group members to adopt them. This may exclude, at least over the short run, individual target group members from being direct beneficiaries as minimal credit, usually restricted to production activities, is available to this group. The organized groups described above, however, almost surely will be able to take advantage of these technologies given the greater resources available to them.

---

1. For a more complete description of local government organization see the CAP for the Rural Municipal Development Loan (525-T-044).

Benefits for the urban poor, at least over the short term, will largely be indirect. While the urban poor depend on oil and its derivatives for transportation and productive and domestic uses, there are virtually no alternatives that are both technically and economically feasible at this time that directly benefit them.

Examples of direct or indirect benefits that could be realized in rural areas from replication of technologies demonstrated in this project are discussed below. This discussion includes benefits that may accrue to the target group under both this and the follow-on project.

A. Increased Employment for and Productivity of Rural Residents.

1. In Yaviza six new employment opportunities will be created on the energy plantation and in transporting wood. Residents of the three towns served by the system will benefit from increased reliability of services. This may serve as an impetus to creation of small business. The lumber industry may be able to reduce costs by eventually switching from diesel to electric energy. If the profitability of lumbering operations increases, additional employment may be created due to expanded operations.

2. Development of the rice hull fueled rice dryer whose feasibility will be studied, would enable small farmers to increase their incomes through removal of moisture from their rice production. If the technology were adopted by a rice growers coop, they would also gain the benefits of returns from cooperative ownership. Additional applications of this technology (e.g. milk cooling, onion drying and refrigeration), could improve prices of these products through quality improvements and/or longer shelf life.

3. Irrigation and hence higher productivity in farm agriculture could be possible through direct solar (photovoltaic powered drip irrigation system), wind, or bio-gas fueled technologies or indirectly through farm or community electric systems powered by hydro or bio-mass.

5. Solar powered cooling systems, such as the one described for the Castillero Hospital in Chitré, can bring the benefits of chilled food storage (i.e., less waste and longer shelf life) to production schools, fishing cooperatives, fruit and vegetable production operations and marketing coops. Feasibility will probably be limited to sites where the costs of existing refrigeration alternatives are now, or later become prohibitive.

6. Methane fueled water pumps, electric lights, and milk coolers can also provide farm income improvement by increasing the quality and efficiency of productive activities (i.e., facilitate planting a second

or third crop during the dry season, raising broilers in six weeks instead of eight, moving from Grade C to Grade A or B milk production).

B. Better Health and Nutrition

1. Solar and wind power for isolated rural health sub-centers and posts would allow those facilities, some of which are currently unable to stock vaccines such as polio due to lack of refrigeration, to maintain a refrigerator and stock these vaccines at a reduced cost.

2. A steady supply of fish from a community or family fish pond, which otherwise might have been impossible to build and maintain due to lack of access to a convenient water source, can become a reality as water pumps powered by alternative energy sources bring water from a stream some distance away. The sludge left over from producing the methane can also be used as a soil builder in the family vegetable garden or for animal feed.

C. Education and Communications

1. For communities that are extremely isolated, photovoltaic applications such as the one described for Virotal Hill, Veraguas can make the difference between life and death as a previously unavailable communication channel opens up for transmitting urgent messages to the nearest population center. Teachers can also use this communication channel to order supplies, schedule visits of MOE supervisors and specialists as well as for purposes of introducing new and improved curricula to their classrooms.

2. Availability of electricity, via a micro-hydro turbine, wood, or methane powered generator in an isolated community which previously had no electricity can open up the possibility of holding literacy training and skills upgrading programs in the evenings and thus attract adults who otherwise would be unable to attend.

D. Domestic Benefits

Access to pumped water, which could be accomplished through any of the conversion technologies demonstrated under the project, can literally save rural farm family members hours of work a week, and free family members for other on-and-off farm activities, including those with income generations possibilities. Similar savings in time spent in routine daily activities can be obtained in using a bio-mass fueled mill to hull rice,a methane stove in place of a wood stove and an electric iron in place of an iron that must be heated over hot coals. These benefits will accrue mainly to campesino wives, who bear the burden of a large portion of domestic chores.

E. Improved and more Efficient Government Services.

A reduction in government energy usage or increased GOP use of alternative energy sources could eventually lead to a greater quantity and better quality of government services by freeing up resources that would otherwise go to pay for foreign oil.

III. Socio-cultural Feasibility

In considering the socio-cultural implications of this project for the target group it should be remembered that this project represents the first phase of a multiphased activity. The primary purpose of this phase, in addition to developing the necessary institutional capability, is to adapt existing alternative technologies already in use elsewhere to Panama and, in so doing assess their technical and economic feasibility. Socio-cultural feasibility will also be important to the success of this initial phase and will be vital to success under the follow on effort. As implementation of a few of the demonstration projects requires community participation, the project will serve as a vehicle through which to gauge the ability of the target group to learn about and make good use of the energy produced, as well as assess the technical and economic feasibility of the technologies demonstrated.

Direct involvement of the target group in developing and implementing the demonstration activities is required in three projects - the bio-mass demonstration that will be carried out in Yaviza, and the two bio-gas demonstrations to be carried out at the Manuel González asentamiento at La Colorada and the production school in Caimito. As described below, several precautions were taken to select sites where the community had received and responded well to prior assistance from GOP institutions and where residents indicated they were interested in applying the demonstration technology. Several elements have also been built into the project design to permit a fuller examination of socio-cultural factors in designing activities to be carried out under the follow-on loan.

A. Strategy for Site Selection.

A two-step process was followed in selecting sites for demonstration projects:

1. Initial IRHE contacts with other public and private institutions to identify potential demonstration projects.

Recognizing the importance of operating through institutions and organizations that have ongoing programs at the community level and have gained the confidence and trust of community residents, RESCU staff visited agencies such as DINAAC, the Ministry of Health, and the Ministry of Education, all of which are known to have effective community outreach programs. Individuals interviewed were asked to identify communities or groups that were experiencing difficulties due either to lack of energy or excessive cost or inapplicability of existing energy

sources. They were also asked to comment on several characteristics of the individuals or groups discussed. These included flexibility and adaptability, willingness to work hard and interest in improving their situation. They were also asked to gauge the receptivity of individuals living in these communities to the idea of participating in a demonstration activity.

2. Site visits to communities.

Where further evaluation of a possible project was considered desirable, site visits were normally carried out by a team composed of at least one representative from RESCU, one from AID's project development team, and one from the organization or institution initially contacted (sponsoring institution). In addition to gathering data to permit an assessment of the technical feasibility of a demonstration project, the team briefly explained to community members the nature and benefits of the possible alternative technology application, and what would be expected of them in developing and implementing the project. The reactions and interest of the communities were an important subjective factor taken into consideration in selecting the sites finally chosen.

B. Strategy for maintaining community interest in and acceptance of the demonstration projects during their development and implementation.

Participation of sponsoring GOP institutions will be continued during project implementation to ensure continued community participation. DINAAC at La Colorada, MOE at the production school in Caimito and IRHE itself in the case of Yaviza, will work closely with the community, the contractor and IRHE personnel in all stages of project implementation. Needed manual labor to carry out the demonstration projects will be provided by community members. The community at large will be kept closely informed on project progress and those who will be responsible for operating the energy applications will receive practical on-the-job training from the contractor. The support of the local representative to the national legislative assembly will also be assured by early IRHE contact during implementation.

The case of the asentamiento at La Colorada provides a good illustration of the importance of the participation of these institutions at the community level. The fish pond itself was an experimental activity when first proposed to the asentamiento by DINAAC. The staff of DINAAC worked very closely with the community in all stages of fish pond development. The pond was built with self help labor and has been a success. Community members now have confidence in the DINAAC staff and will be receptive to the demonstration project knowing that DINAAC

has participated in its development and will be involved in implementation.

C. Project activities that will ensure appropriate attention to socio-cultural feasibility in designing the follow-on-loan.

Information needed to ensure that socio-cultural concerns are adequately addressed in developing the Alternative Energy Sources II Project will be developed through:

1. Collection of community attitude and acceptance data as part of the impact evaluation of the demonstration

As part of the overall evaluation of the Alternative Energy Grant, the impact of the demonstration projects on the benefitting communities will be studied. The evaluation team will include an anthropologist, who will collect data for demonstration projects on such variables as: (a) user perception of the advantages and disadvantages of the new technology over technologies previously used or, as the case may be, the previous lack of energy; (b) interest of individuals using the technologies during the project implementation period in continuing to use them once the project terminates; (c) extent to which satisfied users have interest neighbors/friends in the new technologies;and (d) neighbors and friends reactions to the same.

2. Analysis of requests to IRHE for assistance in applying the technologies demonstrated under the project

Another key measure of user acceptance, and in important element in identifying possible sites for replication or demonstration projects during the follow-on loan, will be the quantity and variety of requests that come in to IRHE over the project implementation period from communities/institutions that would like to adopt the new technologies. IRHE will maintain a detailed record of all requests that come in, including where possible, information regarding the underlying motivation on the part of the groups coming in with these requests. In addition, close attention will be paid to the origin of these requests (e.g. GOP/private sector institution or organization, community group) and the geographic areas from which they originate.

3. Energy Assessment

A key project activity and needed element for the development of the Master Plan will be the energy assessment. The assessment will attempt to define and project Panama's energy uses and needs, especially in rural areas; develop an estimate of renewable resources that can be

used to supply energy needs in rural and urban areas; and develop a set of priorities for development of alternative energy resources. A key component of the assessment will be the analysis of the social feasibility of additional applications of the highest priority conversion technologies identified. An anthropologist will be included in the consultant team which assists IRHE in preparing the Master Plan.

ADMINISTRATIVE FEASIBILITY ANALYSIS

A. IRHE Capability.

IRHE is a large well managed autonomous government institution. With over 4200 employees and assets of over $500 million, IRHE serves more than 210,000 clients throughout Panama. Created in 1961, IRHE service capability has grown rapidly from an installed capacity of 14 Megawatts (MW) in 1968 to 456 MW in 1978. During the same period, consumption of IRHE produced electricity has grown from 21 million kWh to 1,471 million kWh. Much of its installed capacity was acquired through takeovers of previously isolated systems, principally the purchase of the Panama Power and Light Co. in 1972, and IRHE has now connected all but the most isolated systems into a natural grid. As described earlier in the PP, IRHE is attempting to develop hydro generation facilities to supply the country's growing need for electricity.

As an autonomous institution with the authority to approve its own budget, approve its own internal regulations and pay salaries higher than the salary scale for central government institutions, IRHE has been able to acquire the human resources necessary for effective operations and achieve reasonable administrative efficiency. This was evident during project development when IRHE's solid logistical system provided transportation and support services to enable project development committee members to make field trips and get reports copied and typed without delay. In sum, IRHE is one of the most competent organizations in Panama to which AID could provide assistance.

B. Project Administration Responsibility.

Most of the project activities will be carried out through the Renewable Energy Sources and Conservation Unit (RESCU). This office is located in the Development Directorate's Studies Office (See IRHE Organizational Charts-Figures 1 and 2). The feasibility studies for micro-hydros will be developed in the Isolated Systems Office which is under the supervision of the Assistant to the Director General.

C. Capability of Implementing Offices.

These offices have adequate capability to initiate project activities. However, additional personnel will be needed to ensure successful project implementation. For example, the RESCU has only one staff member available to work part time on the Master Plan. IRHE and AID have agreed that at least two professionals working full time will be needed to ensure adequate counterpart staff for the contracted advisers. Additional personnel included in the hiring plan (See Project Description) will be needed by RESCU as its project management responsibilities increase during implementation and it receives additional requests for assistance from other parties. Also, responsibility for the micro-hydro feasibility studies has just been assigned to the Isolated Systems Office. This

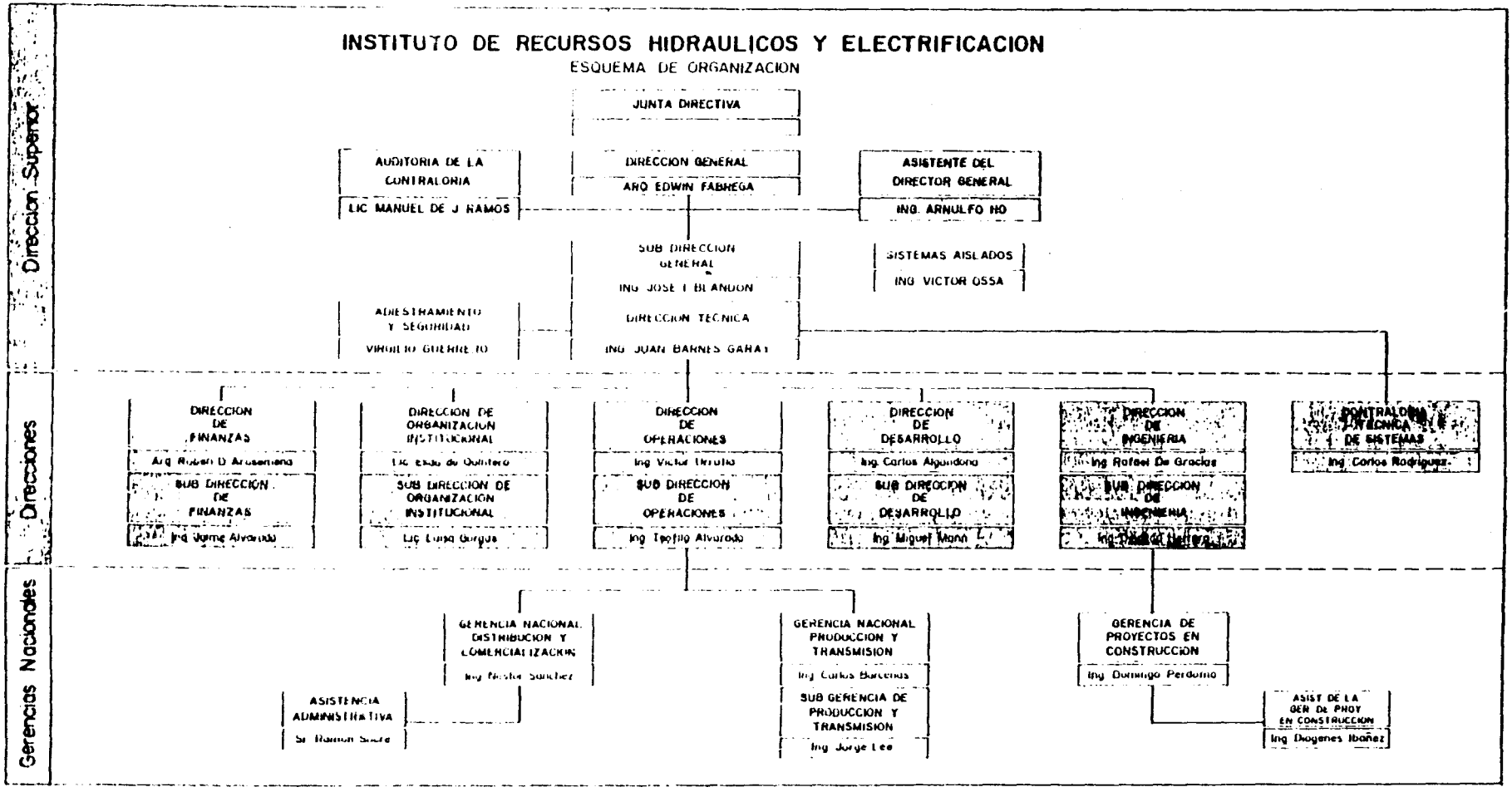

Figure 1 : IRHE Organizational Chart

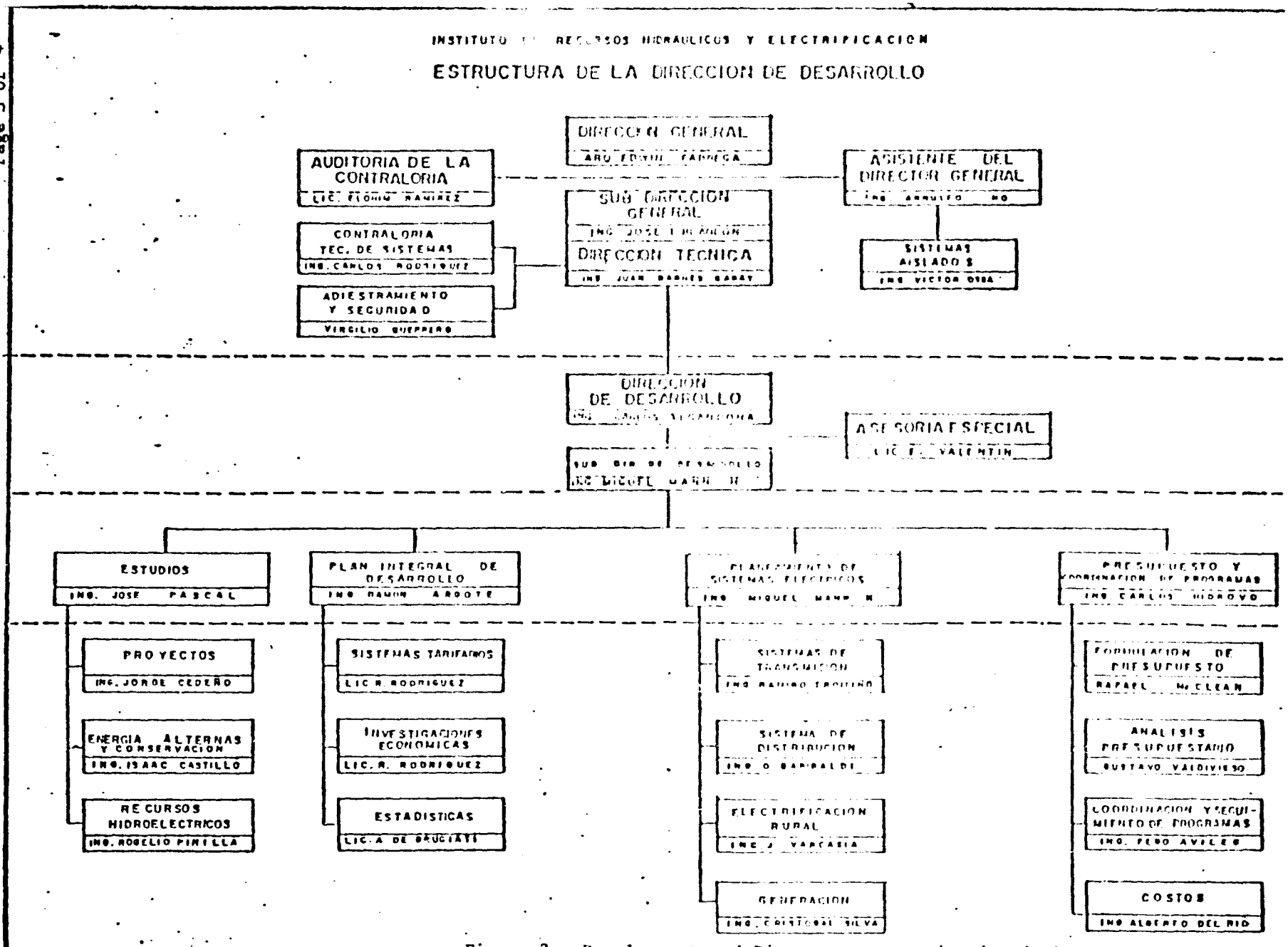

Figure 2: Development and Directorate Organizational Chart

office will need at least two full time engineers to meet the agreed upon target of 40 feasibility studies in two years.

Responsibility for measurement of sun and wind regimes now rests with the Hydrometeorology Office. An arrangement needs to be worked out to insure sufficient personnel and adequate cooperation between RESCU and this office in carrying out the sun and wind measurement activity.

D. Relationship to National Energy Commission.

Shortly before this PP was written, the GOP created a National Energy Commission and a Technical Secretariat to the Commission. The Commission is made up of the Ministers of Planning and Economic Policy and Commerce and Industry, the Director General of IRHE, a representative of the Universities and three citizens appointed by the Executive Branch. IRHE had expected that the Technical Secretariat would be lodged in IRHE, but responsibility was assigned to the Ministry of Commerce and Industry instead. There appears to be some possibility of overlap between the Master Plan Activity of this project and the functions assigned to the Technical Secretariat in the area of recommending institutional mechanisms and policies designed to facilitate development of alternative energy sources. Depending on how quickly the Commission and the Secretariat get organized and the measures the GOP adopts for coordinating the activities of these bodies and IRHE, the scope of work for the Master Plan described in the Project Description may have to be modified.