Department of State TELEGRAM

UNCLASSIFIED 0743

PAGE 01 JAKART 12504 231002Z

11
ACTION AID-59

INFO OCT-01 IGA-02 EA-09 EB-07 /078 W
---------- 045621

R 230901Z SEP 76
FM AMEMBASSY JAKARTA
TO SECSTATE WASHDC 6888

UNCLAS JAKARTA 12504

AIDAC

E.O. 11652: N/A
SUBJ: WEST JAVA INTERIM GENERATION PROJECT
LOANS 497-H-030 & 033

REF: A. STATE 232223
B. ZIVADINOVICH-WOODY TWO-WAY MEMO DATED 6/2/76

1. WESTINGHOUSE PAYMENT PROPOSED IN REFS A AND B HAS NOT BEEN DISCUSSED BY USAID WITH PLN AS THE TOTAL AMOUNT OF PENDING INVOICES IS NOT KNOWN AND MISSION RELUCTANT TO IMPLY LOAN PAYMENT FOR THE EQUIPMENT AND SERVICES DESCRIBED UNTIL CONFIRMATION FUNDS ARE AVAILABLE. WESTINGHOUSE SHOULD INFORM AID/W OF ALL PENDING INVOICES FOR PROJECT COMPLETION TO ASSURE ADEQUATE LOAN FUNDS ARE AVAILABLE TO MEET ALL REQUIREMENTS PRIOR TO ANY USAID DISCUSSIONS WITH PLN.

2. USAID PROJECT ENGINEER HAS PERSONALLY VERIFIED BY NAME PLATE DATA ON INSTALLED EQUIPMENT THAT ALL EQUIPMENT LISTED IN THE WESTINGHOUSE REQUEST ATTACHED TO REF B WAS MANUFACTURED IN THE U.S. PRICES SHOWN IN THE WESTINGHOUSE DOCUMENT CANNOT BE VERIFIED HERE AND SHOULD BE REVIEWED BY AID/W WITH WESTINGHOUSE.

3. MISSION HAS NO OBJECTIONS TO THE WESTINGHOUSE PAYMENT DISCUSSED REFS A AND B, PROVIDED ADEQUATE FUNDS ARE AVAILABLE FROM THE LOANS.

4. PROJECT COMPLETION CONTINUES TO SLIP AND PRESENT PACE

UNCLASSIFIED

INVITATION FOR BIDS
and
CONSTRUCTION CONTRACT

497-0235

140

SAVE = 1974

for

JAKARTA GAS - TURBINE PLANT NO. 1

in

WEST JAVA

AID LOAN NO. 497-H-030

SP-2861-7-A

LISTRIK NEGARA

PERUSAHAAN UMUM LISTRIK NEGARA

Jakarta, Indonesia

Owner

JULY 1973

MAIN

CHAS. T. MAIN INTERNATIONAL, INC.

Engineers

Boston, Massachusetts
U. S. A.

Semarang, Java
Indonesia

INVITATION FOR BIDS

and

CONSTRUCTION CONTRACT

for

JAKARTA GAS TURBINE PLANT NO. 1

in

WEST JAVA

SP-2861-7-A

AID LOAN NO. 497-H-030

PERUSAHAAN UMUM LISTRIK NEGARA

Jakarta, Indonesia

Owner

July, 1973

CHAS. T. MAIN INTERNATIONAL, INC.
Engineers

Prudential Center
Boston, Massachusetts 02199
U.S.A.

Semarang, Java
Indonesia

TABLE OF CONTENTS

Paragraph No.	Title	Page No
	SECTION I	
	NOTICE AND INSTRUCTIONS TO BIDDERS	
1:1	Proposals	I-1
1:2	Description of Project	I-1
1:3	Obtaining Proposal Documents	I-2
1:4	Form of Proposal and Manner of Submission	I-2
1:5	Validity of Proposals	I-3
1:6	Firm Prices	I-4
1:7	Construction Time	I-4
1:8	Explanations and Interpretations	I-4
1:9	Familiarity with Conditions	I-5
1:10	Bonds	I-5
1:11	Bidders	I-6
1:12	Currencies	I-6
1:13	Consideration of Proposals for Award	I-7
1:14	Contract is Entire Agreement	I-7
	SECTION II	
	GENERAL CONDITIONS	
2:0	Definitions	II-1
2:1	Description of Contract	II-2
2:2	Covenant Against Contingent Fees	II-2
2:3	Assignment, Subrogation and Transfer	II-3
2:4	Waiver of Contract Provisions	II-3
2:5	Permits and Licenses	II-4
2:6	Insurance	II-4
2:7	Laws and Regulations	II-6
2:8	Termination of Right to Proceed	II-6
2:9	Termination for the Convenience of the Owner	II-7
2:10	Disputes and Arbitration	II-9
2:11	Source and Origin of Materials, Labor and Transportation	II-9
2:12	Export Packing	II-13
2:13	Export Marking	II-13

Paragraph No.	Title	Page No.
2:14	Export Licenses	II-15
2:15	Taxes, Customs and Duties	II-15
2:16	Account Classification	II-16
2:17	Materials, Equipment and Workmanship	II-16
2:18	Purchase of Materials	II-16
2:19	Factory Inspection and Tests	II-17
2:20	Certificate of Completion and Evidence of Delivery	II-18
2:21	Local Materials	II-18
2:22	Local Labor	II-18
2:23	Payment	II-19
2:24	Payments to Materialmen and Subcontractors	II-24
2:25	Protection to Persons and Property	II-24
2:26	Indemnity	II-26
2:27	Cumulative Remedies	II-27
2:28	Indonesian Subcontractors for Work in Indonesia	II-27
2:29	Contractor's Non-Indonesian Field Personnel	II-28
2:30	Report of Delays	II-29
2:31	Legal Effect of Certain AID Approvals	II-29
2:32	Diversion and Vesting Rights of AID	II-30
2:33	Equal Opportunity	II-30
2:34	Patents	II-32
2:35	Warranties	II-33
2:36	Assignments of Guarantees	II-34
2:37	Force Majeure	II-34
2:38	Security	II-35
2:39	Books and Records	II-35

SECTION III

SPECIAL CONDITIONS

3:1	Experience with Equipment Offered	III-1
3:2	Supervision and Inspection	III-1
3:3	Services of Instructor	III-2
3:4	Factory Training	III-3
3:5	Tests for Guarantees with Penalties	III-3
3:6	Codes and Standards	III-4
3:7	Drawings	III-4
3:8	Liquidated Damages	III-5
3:9	Operating Instruction Books, Maintenance Manuals and Parts Lists with Prices	III-5

Paragraph No.	Title	Page No.
3:10	Spare Parts	III-5
3:11	Special Tools	III-5

SECTION IV

CONTRACTOR'S PROPOSAL

4:1	Offer to Furnish and Install	IV-1
4:2	Non-Collusive Bidding Certification	IV-1
4:3	Time and Manner of Construction	IV-2
4:4	Errors and Omissions by Bidder	IV-3
4:5	Addenda	IV-3
4:6	Exceptions	IV-4
4:7	Bid Bond or Other Security	IV-4
4:8	Guaranteed Gas Turbine Generator Performance	IV-4
4:9	Evaluation of Proposals	IV-5
4:10	Conversion Rate for Calculating Equivalent Prices	IV-6
4:11	Price Schedule	IV-6

SECTION V

ACCEPTANCE OF PROPOSAL

	Acceptance of Proposal	V-1

SECTION VI

EQUIPMENT AND MATERIALS

6:1	Scope of Work	VI-1
6:2	Operating Conditions	VI-1
6:3	Equipment Rating	VI-2
6:4	Fuel Analysis	VI-2
6:5	Gas Turbine	VI-3
6:6	Generator and Accessories	VI-7
6:7	Instrumentation, Controls and Protection	VI-11
6:8	Electrical Equipment	VI-20
6:9	Housing	VI-36
6:10	Gas-Turbine Generator Unit Accessories	VI-36

Paragraph No.	Title	Page No.
6:11	Specific Gas Turbine-Generator Unit Information to be Included with Proposal	VI-38
6:12	Tests and Inspections	VI-45
6:13	Finishing, Cleaning and Painting	VI-48
6:14	Overhead Line Connections to Existing 70 KV Bus	VI-48
6:15	Electrical Interlocks	VI-49

SECTION VII

CONSTRUCTION

7:1	Scope of Work	VII-1
7:2	Equipment Installation	VII-3
7:3	Piping	VII-4

APPENDIX I

DRAWINGS

Drawing No.	Title
2861-7-B1	Gas Turbine One-Line Wiring Diagram
2861-7-B2	General Location Drawing
2861-7-B3	Soil Boring Log

APPENDIX II

SAMPLE FORMS

Form No.	Title
AID 1440-3	Contractor's Certificate and Agreement
24	Bid Bond
25	Performance Bond
25-A	Payment Bond

ADDENDUM

SECTION I

NOTICE AND INSTRUCTIONS TO BIDDERS

1:1 PROPOSALS

Sealed Proposals for the construction, including the supply of necessary labor, materials, equipment, and placing in service of a Gas Turbine Electric Generating Plant for the Ministry of Public Works and Power, represented by Perusahaan Umum Listrik Negara, hereinafter called "PLN", will be received by PLN or or before 11 A.M. o'clock, West Indonesian Standard Time, April 23, 1973 at PLN's office in Jakarta, Indonesia at which time and place the Proposals will be publicly opened and read. Any proposal received at the office of PLN subsequent to the time specified will be promptly returned to the Bidder unopened. Bidders will be held responsible for assuring that their bids are actually received on time and at the place and office designated. A late bid will not be considered even though it became late because of factors beyond the Bidder's control.

1:2 DESCRIPTION OF PROJECT

The Project will consist of the following as a minimum:

1:2.1 Two Gas Turbine Electric Generating Units of the 19 - 27 MW class, complete with all necessary auxiliaries and controls to make a complete operating plant, using fuel oil as specified in Section VI.

1:2.2 Two step-up transformers with breakers, protective equipment and controls for connecting to a 70 kV (nominal) 50 hertz Distributing system.

1:2.3 The Project is located near the City of Jakarta, Java, Indonesia, within the area of the existing Tanjung Priok Steam Power Plant, all as more fully described in the Plans, Specifications, Construction Drawings, and Contract Documents and Proposal therefor hereinafter referred to.

1:2.4 Proposals will be made on a lump sum basis, with fixed prices.

1:3 OBTAINING PROPOSAL DOCUMENTS

1:3.1 Proposal Forms, Plans, Specifications, Construction Drawings, and Contract Documents together with all necessary forms for Bidders may be obtained from CHAS. T. MAIN INTERNATIONAL, INC., hereinafter called "ENGINEER", at the latter's home office, Southeast Tower, Prudential Center, Boston, Massachusetts 02199, U.S.A. The above documents may be examined at the office of the ENGINEER.

1:3.2 Each set of Plans, Specifications, and Construction Drawings will have a serial number, given by the ENGINEER, and the number of each set with the name of the prospective BIDDER will be recorded by the ENGINEER. Proposals will be accepted only from the prospective BIDDER to whom documents were issued.

1:4 FORM OF PROPOSAL AND MANNER OF SUBMISSION

1:4.1 Proposal and all supporting instruments must be submitted in seven copies on the forms furnished by the ENGINEER and must be delivered in sealed envelopes. The name and address of the BIDDER and the date and hour of the Bid opening must appear on the sealed envelopes, clearly marked: "Proposal for Jakarta Gas Turbine Electric Generating Plant." The original and four copies of the Proposal shall be delivered to PLN as follows:

Perusahaan Umum Listrik Negara
Attention: Ir. Bagoes Moedijantoro, Director for Construction
Jl. Sunan Ngampel No. 1
Kebayoran Baru, Jakarta, Indonesia

also two copies unpriced shall be delivered to:

Chas. T. Main International, Inc.
Southeast Tower, Prudential Center
Boston, Massachusetts 02199, U.S.A.
Attention: Mr. Morris Mintz

1:4.2 Proposals must be written in ink or typewritten. No alterations or interlineations will be permitted, unless made before submission and initialed and dated. All documentation in connection with the Proposal and Contract Documents must be in the English language. The Proposal must be signed in ink by the BIDDER or

authorized representative of the BIDDER, with his full name, title, business address, or residence. Any person signing a proposal as a representative of a corporation or partnership will be required to submit together with their proposal a notarized "Power of Attorney". The name of each person signing shall be typed or printed legibly below his signature.

1:4.3 All copies of the Proposal shall be marked "Duplicate Copy". In case of a variation between the "Original" and those shown marked "Duplicate", the "Original" version shall govern. Where a discrepancy exists in the conversion of Rupiahs to U.S. Dollars for calculating equivalent U.S. Dollars, the stated Rupiah price shown shall govern.

1:4.4 Each Proposal must consider any amendments, addenda or revision to this Invitation for Bids (IFB) issued prior to the opening date and so acknowledged by specific mention in the Proposal. The Proposal should be made in strict conformity with the provisions of this IFB and amendments, addenda or revisions thereto.

1:4.5 No Proposal will be considered for individual items.

1:4.6 Neither PLN nor the ENGINEER assumes any obligation or responsibility, whatsoever, to compensate or indemnify any BIDDER for any cost which the BIDDER may incur in or by the preparation of his Proposal.

1:4.7 Original proposals transmitted verbally or via telegram, cablegram, or radiogram will not be accepted.

1:4.8 BIDDER must furnish all prices, data and information called for in the IFB, including such supplemental data as may be required by the General or Special Conditions forming a part of the IFB. If any prices are omitted or if any information or data is not in accordance with the IFB requirements, the Proposal may be rejected.

1:4.9 Each Proposal must be accompanied by Bid Bond, or other acceptable security, as defined in Paragraph 1:10.

1:5 VALIDITY OF PROPOSALS

1:5.1 A valid and acceptable Proposal may not be withdrawn before: (a) a contract to construct the Project described herein is executed by an acceptable BIDDER, or (b) the lapse of one hundred fifty (150) calendar days from the time set for the closing date of receiving Proposals, whichever is earlier.

1:5.2 The Proposal of the successful BIDDER shall remain in full force and effect until the date his Proposal has been accepted and he shall have delivered acceptable Performance Bond and Payment Bond, or other guarantee, as defined in Paragraph 1:10.

1:5.3 Should the successful BIDDER fail or refuse to furnish acceptable Performance and Payment Bonds, or other guaranty, within thirty days after written notification of the acceptance of the Proposal by PLN, the BIDDER will be considered to have abandoned the Proposal. In such event, PLN shall be entitled: (a) to enforce the Bid Bond in accordance with its terms or (b) if a certified check or other guaranty has been delivered with the Proposal, to retain from the proceeds of the certified check or other guaranty the difference, not exceeding the amount of the certified check or other guaranty, between the amount of the Proposal and such larger amount for which PLN may in good faith contract with another party to construct the Plant. The term "successful BIDDER" shall be deemed to include any BIDDER whose Proposal is accepted after another BIDDER has previously refused or has been unable to execute or to furnish satisfactory Performance and Payment Bonds or other guaranty.

1:6 FIRM PRICES

All prices quoted in the Proposal of the successful BIDDER shall be firm throughout the life of the Contract.

1:7 CONSTRUCTION TIME

The time for completion of the Project shall be as stated in Paragraph 4:3.1.

1:8 EXPLANATIONS AND INTERPRETATIONS

1:8.1 If any explanation or interpretation is desired by a prospective BIDDER, prior to bid closing date, regarding the true meaning or intent of any part of the IFB, BIDDER should request such explanation or interpretation from the ENGINEER at his Office. A pre-bid conference to answer any questions will be held three days after issuance of the IFB.

1:8.2 Any substantive explanation or interpretation will be made in the form of a written Addendum which will be furnished to all BIDDERS alike. Receipt of such Addenda by BIDDERS shall be acknowledged in their Proposals.

1:9 FAMILIARITY WITH CONDITIONS

Prior to the submission of the Proposal, the BIDDER should make and shall be deemed to have made a careful examination of the Plans, Specifications, Construction Drawings, forms of Contractor's Proposal and Contract Documents on file with PLN and with the ENGINEER and shall become informed as to the location and nature of the proposed construction, the transportation facilities, the kind and character of soil and terrain to be encountered, the kind of facilities required before and during the construction of the Project, general local conditions including Indonesian labor laws and all other matters that may affect the cost and the time of completion of the Project.

1:10 BONDS

1:10.1 Bid Bond: Each BIDDER must submit together with his original Proposal a Bid Bond, with corporate surety acceptable to PLN and AID, in an amount not less than ten percent (10%) of the total amount of the bid. The Bid Bond shall have a validity of not less than one hundred fifty (150) calendar days from the date set for the opening of the Proposals. The Bid Bond must comply with the specimen form attached hereto. No consideration will be given to any Proposal not accompanied by a valid Bid Bond. Except in the case of forfeiture of the Bid Bond for any of the reasons set forth in this IFB, Bid Bonds will be returned to respective unsuccessful BIDDERS within 7 to 10 days after consummation of the CONTRACT, but in any event, not later than 150 calendar days from the date set for the opening of Proposals. Defaulting BIDDER's liability will be limited to the value of his Bid Bond.

1:10.2 Performance Bond: The successful BIDDER shall, upon acceptance of his Proposal furnish a Performance Bond executed by corporate surety acceptable to PLN and AID in an amount not less than thirty percent (30%) of the total amount of the CONTRACT. The Performance Bond must comply with the specimen form attached hereto.

1:10.3 Payment Bond: The successful BIDDER shall, upon acceptance of his Proposal, furnish a labor and material Payment Bond, executed by corporate surety acceptable to PLN and AID with conditions for the prompt payment for all material furnished or labor supplied or performed whether or not said material or labor enter into and become component parts of the Project. The amount of the

Payment Bond shall be thirty percent (30%) of the total amount of the CONTRACT, or U.S. $2,500,000, whichever is less. The Payment Bond must comply with the specimen form attached hereto.

1:10.4 Duration of Performance/Payment Bonds: Both the Performance and Payment Bonds shall remain valid through the warranty periods specified in the CONTRACT documents.

1:10.5 Guaranty in Lieu of Bonds: Security in other forms satisfactory to PLN and AID, such as certified checks, deposit of cash or securities in the percentages stated may be used in lieu of Bonds; however, the same stipulations required of Bonds must be adhered to.

1:10.6 Proceeds of all bonds or other guarantees shall be payable to PLN in U.S. Dollars to the extent needed, as specified above, to compensate PLN for losses incurred.

1:11 BIDDERS

1:11.1 Proposals will be accepted only from individuals or firms who have been requested to submit proposals for this Project.

1:11.2 ANY PROPOSAL RECEIVED FROM A BIDDER, WHO HAS NOT BEEN REQUESTED TO SUBMIT A PROPOSAL WILL BE RETURNED TO THE BIDDER UNOPENED.

1:12 CURRENCIES

1:12.1 The proposal shall be priced in U.S. Dollars and Indonesian Rupiahs, all as detailed and required by the CONTRACTOR'S PROPOSAL. The intent of pricing in two currencies is to effect payment in the currencies expended by the CONTRACTOR. Costs incurred outside Indonesia should be priced in U.S. Dollars. Costs incurred in Indonesia, except wage payment to Non-Indonesian employees, should be priced in Rupiahs.

1:12.2 Funds (U.S. Dollars) from the AID loan shall be used exclusively to procure goods and services for the Project having both their source and origin in countries included in Code 941 of the AID Geographic Code Book.

1:12.3 The currencies, U.S. Dollars and Indonesian Rupiahs, are presently freely convertible.

1:12.4 Currency conversions for the CONTRACTOR and his employees shall be made through exchange agencies authorized by the Government of Indonesia.

1:13 CONSIDERATION OF PROPOSALS FOR AWARD

1:13.1 Award will be made to that BIDDER whose Proposal is responsive to this IFB and is both reasonable and lowest in price (U.S. Dollars and Indonesian Rupiahs) after adjustment by arithmetic weighting to give effect to any factor other than price required or permitted by this IFB to be considered in evaluation of Proposals.

1:13.2 A responsive Proposal is one which accepts all of the terms and conditions of the IFB without material modification. A material modification is one which in any way affects the price, quality, quantity, delivery, scope or completion date of construction or other services to be supplied or performed; or which limits in any way any rights of PLN as any of the foregoing have been defined or specified in this IFB.

1:13.3 PLN reserves the right to waive minor irregularities or minor errors in any Proposal, if it appears to PLN that such irregularities or errors were made through inadvertence. Any such irregularities or errors so waived must be corrected in the Proposal prior to the acceptance thereof by PLN.

1:13.4 PLN reserves the right to reject any or all Proposals.

1:14 CONTRACT IS ENTIRE AGREEMENT

The CONTRACT to be effected by the acceptance of the Proposal shall be deemed to include the entire agreement between the parties thereto and the BIDDER shall not claim any modification thereof resulting from any representation or promise made at any time by any officer, agent or employee of PLN or by any other person.

MINISTRY OF PUBLIC WORKS AND POWER
Represented By
PERUSAHAAN UMUM LISTRIK NEGARA

By _____
Ir. Bagoes Moedijantoro, Director for Construction

_____ 1973.

SECTION II

GENERAL CONDITIONS

2:0 DEFINITIONS

2:0.1 Whenever used in this INVITATION FOR BID (IFB) or other CONTRACT DOCUMENTS or in any correspondence relating hereto or any supplement made a part hereof, the following terms shall have the meanings set forth hereinafter.

2:0.2 "OWNER", "PURCHASER" or "PLN" shall mean and refer to the Ministry of Public Works and Power, represented by Perusahaan Umum Listrik Negara, its successors and assigns.

2:0.3 "ENGINEER" or "MAIN" shall mean and refer to Chas. T. Main International Inc., its successors and assigns.

2:0.4 "BIDDER" shall mean the person, partnership or corporation who submits a proposal to furnish materials, equipment and services for a price. Upon acceptance of the successful BIDDER's Proposal, the BIDDER will become the CONTRACTOR and all references to the BIDDER shall apply to the CONTRACTOR.

2:0.5 "CONTRACTOR" shall mean and refer to the successful BIDDER after acceptance of his Proposal and his posting of acceptable Performance and Payment Bonds.

2:0.6 "CONTRACT" shall mean and refer to the written, binding agreement between OWNER and CONTRACTOR, and shall consist of the CONTRACT DOCUMENTS.

2:0.7 "WORK" shall mean and refer to labor, services, materials, and equipment to be furnished, all as set forth in the CONTRACT DOCUMENTS.

2:0.8 "PROJECT" shall mean and refer to the Project as specifically described in NOTICE and INSTRUCTIONS TO BIDDER.

2:0.9 "AID" shall mean and refer to the United States Government, Department of State, Agency for International Development or any substitute or successor agency of the United States Government.

2:0.10 **"BORROWER" shall mean and refer to the Government of Indonesia or any agency, department, or division thereof, authorized to negotiate, receive, or repay loans with AID.**

2:0.11 **"SITE" shall mean the location at Jakarta within the area of the existing Tanjung Priok Steam Power Plant.**

2:0.12 "COMPLETE CONSTRUCTION", "COMPLETION OF CONSTRUCTION", "COMPLETION", "COMPLETE THE WORK", shall mean that time when the CONTRACTOR has completed construction of the PROJECT and met the performance guarantee.

2:1 DESCRIPTION OF CONTRACT

The following constitute the CONTRACT DOCUMENTS:

Notice and Instructions to Bidders
General Conditions
Special Conditions
Contractor's Proposal
Acceptance of Proposal
Equipment and Materials
Construction
Drawings and Specifications
Addenda (if any)

2:2 COVENANT AGAINST CONTINGENT FEES

The CONTRACTOR warrants that no person or selling agency has been employed or retained to solicit or secure the CONTRACT upon an agreement or understanding for a commission, percentage, brokerage or contingent fee, excepting bonafide employees or a bonafide established commercial or selling agency maintained by the CONTRACTOR for the purpose of securing business. For breach or violation of this warranty, the OWNER shall have the right to annul the CONTRACT without liability or, in its discretion, to deduct from the contract price or otherwise recover the full amount of such commission, percentage, brokerage or contingent fee.

2:3 ASSIGNMENT, SUBROGATION AND TRANSFER

2:3.1 The CONTRACT entered into by the CONTRACTOR and OWNER shall inure to the benefit of and be binding upon the successors and permitted assigns of the parties hereto; but the performance hereof shall not be assigned in whole or in part by either without the prior written permission of the other party and AID.

2:3.2 With the exception of the purchase of materials and equipment or raw materials required for construction of the Project, it is forbidden for the CONTRACTOR to subrogate itself by, or subcontract to, any third party either juridical or natural, under any form or condition, the performance of the CONTRACT or of any part or any section thereof, without the prior approval in writing of OWNER and of AID. In the event of subrogation or subcontract approved by OWNER and AID, the CONTRACTOR shall be jointly liable with the subrogee or the subcontractor for all their actions or omissions or those of their personnel to the same extent as if such actions or omissions were CONTRACTOR's own actions and/or omissions and the CONTRACTOR shall not in any manner be discharged from its obligations and liabilities under the CONTRACT.

2:3.3 The CONTRACTOR shall not assign any money or monies which may be claimed by it under this CONTRACT, except to a bank, trust company or other financial institution or a government agency, for the purpose of securing a loan, without approval by PLN.

2:3.4 The transfer by the CONTRACTOR of any claims whatsoever it may have against the OWNER deriving from the CONTRACT is forbidden and shall have no legal effect unless made with the prior approval in writing by the OWNER.

2:4 WAIVER OF CONTRACT PROVISIONS

None of the provisions of the CONTRACT shall be considered waived by the OWNER and CONTRACTOR except when such waiver is given in writing by the OWNER and CONTRACTOR ar approved by AID. No such waiver shall be a waiver of any past or future default, breach or modification of any of the terms, provisions, conditions or covenants of the CONTRACT except as expressly stipulated in such waiver.

2:5 PERMITS AND LICENSES

The OWNER will secure all building permits in connection with the WORK. The OWNER will also obtain, at his own expense, all registrations. licenses or permits required by all Indonesian Government and local laws, regulatory authorities or commissions required for construction of the Project.

2:6 INSURANCE

2:6.1 During the course of construction and until construction is completed, the CONTRACTOR shall provide and maintain at its own expense the following insurance applying to all operations undertaken by it, its agents, employees and subcontractors, in not less than the minimum limits indicated:

	Insurance	Minimum Limits
a.	"All Risk" Builder's Risk covering interests of the CONTRACTOR; OWNER and all subcontractors (if any)	Full value of Project
b.	Workmen's Compensation	
	(1) U.S. citizens, bona fide residents of U.S. and personnel hired in the U.S.	Payments comparable to those provided under the Longshoremen's and Harbor Workers' Act (33 U.S.C. 901 et seq.)
	(2) All Others	Payments meeting at least the minimum legal requirements which are applicable by reason of the point of hiring and the site of the work.
c.	Employer's Liability, for all employees	$100,000 each occurrence or disease

Insurance	Minimum Limits
d. Public Liability, including contractual, completed operations and contractor's protective.	
Bodily Injury	$ 50,000/$100,000
Property Damage	$100,000
e. Automobile Liability	
Bodily Injury	$ 25,000/$50,000
Property Damage	$ 25,000
f. Marine Insurance	Total cost of equipment, materials, and supplies.

2:6.2 All of the insurance shall be in sound insurance companies satisfactory to the OWNER and AID.

2:6.3 The CONTRACTOR shall file with the OWNER properly executed certificates of insurance or copies of insurance policies before commencing the Project.

2:6.4 Certificates of insurance shall contain at least the following information:

a. Name and address of the insurance company, policy number and expiration date.

b. Signature of insurance company representative or agent and address thereof.

c. Types of coverage and limits of insurance.

d. A statement indicating that the OWNER and ENGINEER shall receive at least thirty (30) days advance written notice of cancellation of any of the policies or modifications of the insurance.

2:6.5 The CONTRACTOR shall take appropriate steps to permit no subcontractor, if any, at whatever level, to enter upon or continue the performance of his subcontract unless the subcontractor is and remains adequately insured as required above. The CONTRACTOR assumes responsibility for the subcontractor's insurance and insurance certificates.

2:6.6 The furnishing of the foregoing insurance by the CONTRACTOR shall not limit any of the obligations or liabilities of the CONTRACTOR imposed under this CONTRACT or by law.

2:7 LAWS AND REGULATIONS

The CONTRACTOR shall comply with all applicable laws, ordinances, codes, regulations and labor standards relating to the WORK. The CONTRACT shall be governed by the laws of the State of New York for the portion of the work performed outside of Indonesia and Indonesian laws for the portion of the work performed in Indonesia. Should the CONTRACTOR become aware of any violations of any laws, ordinances, codes, regulations or labor standards, he shall promptly notify the ENGINEER in writing. If the CONTRACTOR performs any WORK in violation of such laws, ordinances, codes regulations or labor standards, he shall be responsible for all penalties and costs incurred.

2:8 TERMINATION OF RIGHT TO PROCEED

2:8.1 If any or all of the WORK performed under the CONTRACT should be abandoned by the CONTRACTOR; or if the CONTRACT or any part thereof should be assigned in violation of the provisions of Assignment, Subrogation and Transfer Paragraph; or any of the WORK sublet by the CONTRACTOR without the required permission of the OWNER; or if the CONTRACTOR be placed in bankruptcy or a receiver be appointed for its properties; or if any any time it should appear to the ENGINEER that the schedule of WORK is not being maintained or that the CONTRACTOR is violating any of the conditions or provisions of the CONTRACT; or if at any time it should appear to the ENGINEER that the CONTRACTOR is refusing or failing to properly perform the WORK; or the CONTRACTOR is performing the WORK under the CONTRACT in bad faith or not in accordance with the terms thereof; and if the CONTRACTOR fails to start remedy of such default within ten calendar days after receipt of the CONTRACTOR from the ENGINEER or the OWNER of such notice of default, the OWNER may, without notice to the CONTRACTOR's sureties, terminate the CONTRACTOR's right to proceed with that portion of the WORK as to which default has occurred. The CONTRACTOR shall have the right to request Arbitration if dissatisfied with any action taken under this Paragraph.

2:8.2 Upon such termination action, the OWNER shall have the right to complete such WORK, by CONTRACT or otherwise, and the CONTRACTOR agrees that the OWNER shall have the right to take possession of and to use any or all of the materials, plant, tools, equipment, supplies and property of any and every kind furnished by the CONTRACTOR for such WORK. The expense of so completing such WORK, together with a reasonable charge for administrating any contract for such completion, shall be charged to the CONTRACTOR and such expense shall be deducted by the OWNER out of such monies as may be due or may at any time thereafter become due the CONTRACTOR. In the event the expense of completing the WORK exceeds the sum which would have otherwise been payable under the CONTRACT, then the CONTRACTOR and its sureties shall be liable for and shall upon notice from the OWNER promptly pay to the OWNER the amount of such excess.

2:8.3 The OWNER shall not be required to obtain the lowest figures for completing such WORK, but may make such expenditures as in the OWNER's sole judgement will best accomplish such completion. The CONTRACTOR shall have the right to request Arbitration if dissatisfied with any action taken under this Paragraph.

2:9 TERMINATION FOR THE CONVENIENCE OF THE OWNER

2:9.1 The OWNER, at his option, may cancel and terminate the CONTRACT in whole or from time to time in part, at any time by written NOTICE thereof to CONTRACTOR whether or not CONTRACTOR is in default. Upon any such cancellation, the CONTRACTOR agrees to waive any claims for damages including loss of anticipated profits on account thereof; but as the sole right and remedy of CONTRACTOR, the OWNER shall pay the CONTRACTOR in accordance with the provisions noted below; provided, however, that the provision of the CONTRACT relating to specific warranty of equipment, material, or workmanship and the provisions relating to a specific agreement by one of the parties to hold harmless or indemnify the other party shall remain in full force and effect after such cancellation and termination to the extent provided in such provisions.

2:9.2 Upon receipt of any such NOTICE, the CONTRACTOR shall, unless the NOTICE directs otherwise:

a. Immediately discontinue the WORK on the date and to the extent specified in the NOTICE.

b. Place no further orders or subcontracts for materials, services, or facilities, except as may be necessary for completion of such portion of the WORK under the CONTRACT not terminated.

c. Promptly make every reasonable effort to procure cancellation, upon terms satisfactory to the OWNER, of all orders and subcontracts to the extent they relate to the performance of WORK terminated.

d. Assist the OWNER as specifically requested in writing in the maintenance, protection and disposition of property acquired by the OWNER under the CONTRACT.

2:9.3 Upon any such termination, the OWNER shall pay an amount to the CONTRACTOR determined in accordance with the following without duplication of any item:

a. All amounts due and not previously paid to the CONTRACTOR for WORK accomplished in accordance with the CONTRACT prior to such NOTICE, and for WORK thereafter completed as specified in such NOTICE.

b. The cost of settling and paying claims arising out of the termination of WORK under subcontracts or orders as provided in Paragraph 2:9.2 (c) above.

c. The reasonable cost incurred pursuant to Paragraph 2:9.2 (d) above.

d. Any other reasonable costs incidental to such termination of WORK.

e. The foregoing amounts shall include a reasonable sum, under all of the circumstances, as profit for the WORK performed by the CONTRACTOR.

2:10 DISPUTES AND ARBITRATION

2:10.1 Any dispute or difference arising out of this CONTRACT which cannot be settled or adjusted by mutual agreement, or the settlement of which is not otherwise provided for in the CONTRACT, shall be settled and finally determined by arbitration in the following manner:

> Each of the parties shall appoint an arbitrator. If the two arbitrators so appointed cannot agree upon a decision and award within two weeks of the date of their appointment, they shall select a third arbitrator. If either of the parties fail to appoint its arbitrator within 60 days after receipt of NOTICE of the appointment by the other of its arbitrator, or if the arbitrators fail to appoint a third, then the President of the International Chamber of Commerce, 38 Cours Albertler, Paris, France shall have the power, on the request of either party, to make the appointments which had not been made as contemplated above. The arbitration shall be conducted in accordance with the rules of conciliation and arbitration of the International Chamber of Commerce and shall be held as promptly as possible at such time and place as the arbitrators may determine. The decision of the majority of arbitrators shall be final and binding upon the parties hereto and the expense of the arbitration shall be paid as the arbitrators may determine.

2:10.2 During the period of arbitration, the performance of the CONTRACT shall be carried on without interruption and in accordance with the terms of the CONTRACT, except as to work for which the OWNER may specifically authorize delay pending arbitration.

2:11 SOURCE AND ORIGIN OF MATERIALS, LABOR AND TRANSPORTATION

2:11.1 The WORK is for a project to be financed in part under an AID Loan and is subject to all applicable rules and regulations of AID. All labor, equipment, material and services offered by the CONTRACTOR and for which payment will be made in U.S. Dollars from the AID Loan must have their source and origin in certain countries which are defined in AID Geographic Code 941, Selected Free World.

2:11.2 All equipment, material and services purchased with AID-financed Dollars shall be deemed to have their source and origin in Code 941 countries if they are shipped either directly from Code 941 countries to Indonesia or from Code 941 countries to a Free Port or Bonded Warehouse and thereafter are shipped in the same form to Indonesia; provided, however, that goods which are produced shall not be deemed to have their source and origin in Code 941 countries if they contain any components from a country not included in the AID Geographic Code 935, or if they contain components from Code 935 countries imported into Code 941 countries and acquired by the producer in the form in which they were imported and the total cost of such components delivered at the point of production amounts to more than fifty (50) percent of the lowest price (excluding the cost of ocean transportation and marine insurance) at which the producer makes the commodity available for export sale.

2:11.3 All equipment and materials complying with specifications shall be of Indonesian source and origin to the maximum extent feasible. Such material will not be purchased with AID-financed dollars.

2:11.4 Equipment and materials shall be deemed to be of Indonesian source and origin if they are mined, grown or produced in Indonesia and do not contain any components imported from a country not included in AID Geographic Code 935. A commodity is produced when through manufacturing, processing or substantial and major assembling of components, a commercially recognized new commodity results that is substantially different in basic characteristics or in purpose or utility from its components.

2:11.5 At least fifty (50) percent of the gross tonnage of materials and equipment which is to be financed by AID Dollars under this CONTRACT which may be transported to Indonesia on ocean vessels for use on or incorporation in the project shall be transported by privately owned U.S. Flag Carriers to the extent that they are available. The CONTRACTOR shall furnish documentation with regard to the nationality of the vessels used to transport such equipment and materials to the Project. Where U.S. Flag Carriers are not available or their use would result in a significant delay, the CONTRACTOR may obtain a release from this requirement from OWNER and AID. Any request for such relief shall fully set forth the basis for the request. No items used on or incorporated into the equipment or financed by the loan shall be shipped on transportation media owned or controlled by countries not included in AID Geographical Code 935. No material or equipment which is transported from the United States will be transported on any ocean vessel which AID has designated as ineligible to carry AID financed cargo or which has been chartered for the carriage of AID financed commodities unless such charter has been approved by AID.

2:11.6 Code 941 and Code 935 countries are:

AID GEOGRAPHIC CODE 941 – SELECTED FREE WORLD

The United States (001 and 002), and any other independent country in the Free World[a] *excluding* the cooperating country itself and the following:

Europe		Other	
Andorra	Malta	Algeria	Kuwait
Austria	Monaco	Australia	New Zealand
Belgium	Netherlands	Canada	Somali Republic
Denmark	Norway	Cyprus	S. Africa, Rep. of
Finland	Portugal	Greece	Southern Rhodesia
France	San Marino	Hong Kong	Syria
Germany, Fed. Rep.	Spain	Iraq	United Arab Rep. (Egypt)
Berlin, West	Sweden	Israel	South Yemen
Iceland	Switzerland	Japan	Qatar
Ireland	United Kingdom	Libya	United Arab Emirates
Italy	Vatican City		
Liechtenstein	Yugoslavia		
Luxembourg			

[a] "Free World" excludes any area or country listed in Code 935.

AID GEOGRAPHIC CODE 935 - SPECIAL FREE WORLD

Any area or country in the Free World, including the cooperating country itself.

Countries *excluded* from the Free World are as follows:

CUBA

CHINA (Mainland) and Other Communist-Controlled Areas, incl.:

Manchuria
Inner Mongolia
Tsinghai Province
Sikang Province
Sinkiang
Tibet
The former Kwantung Leased Territory
The present Port Aurthur Naval Base area
Liaoning Province

EASTERN EUROPE

Albania
Bulgaria
Czechoslovakia
East Germany (Soviet Zone of Germany and Soviet Sector of Berlin)
Estonia
Hungary
Latvia
Lithuania
Romania

KOREA, NORTH

OUTER MONGOLIA

POLAND

UNION OF SOVIET SOCIALIST REPUBLIC (USSR)

VIET-NAM (NORTH)

2:12 EXPORT PACKING

2:12.1 The CONTRACTOR shall adhere and require his suppliers of procurement items to adhere to standard packing requirements recognized by the Export Trade Carriers and such packing shall be so constructed as to avoid loss or damage from the elements, pilferage and the hazards of handling and storage. Such packing shall be sufficiently strong so that it will not break, leak or fall apart thereby exposing the contents. Interior blocking, bracing and cushioning shall be provided where necessary to absorb shocks, prevent rattling and relieve destructive forces. Packages containing fragile material shall be so marked in bold stout letters and be tropicalized.

2:12.2 Machined parts must be thoroughly greased and amply protected against rust-forming and other corrosive elements.

2:12.3 In accordance with good packing practices, materials shall be packed in the smallest possible containers since steamship freight is usually based on cubic measurements.

2:12.4 The use of open type crating and/or similar packing shall be restricted to materials not susceptible to pilferage or to damage by the elements or salt water. This method of packing shall not be used without obtaining the prior approval of the ENGINEER.

2:13 EXPORT MARKING

2:13.1 The CONTRACTOR shall adhere to and require his suppliers to adhere to the following provisions for export marketing:

a. All external marking must be legibly and durably painted or stenciled on two sides and both ends of containers in letters at least one and one-half inches high. Under no circumstances shall chalk or crayon be used.

b. The CONTRACTOR is responsible to assure that, in accordance with AID regulations, all commodities delivered hereunder and their shipping containers shall carry the official AID emblem (Clasped Hands) designed for the purpose.

c. Packages from each supplier must be numbered consecutively. No two packages delivered shall carry the same package number. The package number series shall be continued consecutively throughout all of any suppliers' shipments.

d. Net, tare and gross weights in both pounds and kilograms, as well as the correct outside measurements in terms of length, width and height in both the English and Metric systems must be shown on each package.

e. Marks indicating where to "SLING" shall be emphasized on containers with an arrow.

f. In the event that prior approval has been obtained from the ENGINEER to forward pieces without packing as specified in any Export Packing Paragraph, the pieces must be otherwise safely protected or bundled, using ample metal binding; and metal tags bearing the required marks must be firmly wired to each bundle in at least two visible places.

g. Unless otherwise specified by the OWNER, only the following identifying marks shall be used on shipping containers in addition to the aforesaid AID emblem:

To_____
For_____
AID Loan No._____
Package No. _____ of _____
Contract No.
Gross Weight lbs. kgs.
Tare Weight lbs. kgs.
Net Weight lbs. kgs.
Dimensions: Height - Width - Depth
Feet and Inches
Meters
Total Cu. Ft.
Total Cu. Meters
Color Band

2:13.2 The CONTRACTOR shall show and require his suppliers to show the following information on all Packing Lists:

a. AID Loan Agreement Number.

b. Reference number of the CONTRACT.

c. CONTRACTOR's order number, if any.

d. Item number of CONTRACTOR's order, if any.

e. Export markings, other marks, and package number of each package.

f. Type of package, viz., box, crate, bundle, etc.

g. Net, tare, and gross weights; in pounds and kilograms of each package and of the shipment.

h. Outside dimension of each package in terms of length, width, and height; in feet - inches and meters.

i. Total cubic measurement of the shipment; in cubic feet and cubic meters.

j. Total number of packages in the shipment.

k. Manufacturer's serial number or numbers of equipment in shipment, if any.

2:14 EXPORT LICENSES

Any license or other documentation required by the country of origin to export material, equipment or services to Indonesia shall be obtained by the CONTRACTOR.

2:15 TAXES, CUSTOMS AND DUTIES

2:15.1 All non-Indonesian taxes applicable by reason of the sale or delivery of material or equipment or services provided by the CONTRACTOR shall be for the CONTRACTOR's account. If requested by the CONTRACTOR for tax exemption purposes, the OWNER will furnish evidence of exportation.

2:15.2 The CONTRACTOR shall be exempted from any import duties and charges imposed by Indonesian Law on the material and equipment as well as of the stamp duties imposed on the CONTRACT by virtue of the OWNER's relevant exemption privileges.

2:15.3 The CONTRACTOR and the CONTRACTOR's non-Indonesian field personnel shall be exempt from payment of Indonesian Income Taxes on payments received hereunder and of custom duties, harbor dues and other charges for import of personal effects.

2:15.4 Any instruments, tools, machinery and trucks required for the performance of the CONTRACTOR's services in Indonesia and imported by the CONTRACTOR on the condition of their re-exportation, may be exempted from any custom duties, charges, etc.

2:15.5 AID Loan funds are not available for the payment of any tax, duty, fee, retention, contribution or like charges of any kind paid, or payable by the CONTRACTOR or CONTRACTOR's personnel.

2:16 ACCOUNT CLASSIFICATION

The CONTRACTOR agrees to furnish the OWNER, such reasonable breakdown of the CONTRACT lump sum price [redacted] (based upon prorata cost of the material or equipment furnished and services performed) as may be required by the OWNER to be used as a basis for computing payments on delivered items and work completed. The CONTRACTOR also agrees from time to time to furnish such breakdowns for accounting purposes, as the OWNER may reasonably request.

2:17 MATERIALS, EQUIPMENT AND WORKMANSHIP

2:17.1 The CONTRACTOR shall furnish and use only materials and equipment according to and meeting the requirements of specifications for Equipment and Materials herein, with source and origin as required by General Conditions hereof.

2:17.2 All materials and equipment shall be new, of high quality which will give long life and reliable service. Except as otherwise specified, equipment shall be standard products of manufacturers regularly engaged in the production of such equipment. All equipment shall be modern in design and shall not have been in prior service except as required by factory tests. The workmanship shall be of highest quality in every detail.

2:18 PURCHASE OF MATERIALS

The CONTRACTOR shall purchase all materials and equipment outright and not subject to any conditional sales agreement, bailment, lease or other agreement reserving unto the seller any right, title or interest therein. All such materials and equipment shall become the property of the OWNER when erected in place or as provided in Paragraph 2:23.

2:19 FACTORY INSPECTION AND TESTS

2:19.1 The OWNER, acting through the ENGINEER, subject to U.S. Government regulations, shall have the right to inspect any machinery, material, structures, equipment, workmanship, labor and any other item (hereinafter collectively referred to in this Paragraph as "Apparatus") furnished by the CONTRACTOR under this CONTRACT and may reject any Apparatus defective or unsuitable for the use and purposes intended, or not in accordance with the intent of the CONTRACT. The CONTRACTOR, upon demand by the OWNER, shall remedy or replace at the CONTRACTOR's expense such defective or unsuitable Apparatus, or the OWNER may, at the expense of the CONTRACTOR remedy or replace such defective or unsuitable Apparatus. The CONTRACTOR shall advise OWNER promptly when Apparatus is ready for inspection in the CONTRACTOR's shops and in those of the suppliers or subcontractors. The OWNER's Inspector shall at all times have access to all parts of shops where Apparatus is being prepared and also shall be provided by the CONTRACTOR with all reasonable inspection facilities.

← Back in! P.G.

2:19.2 The apparatus to be furnished or used in connection with the CONTRACT shall be tested and inspected in accordance with a mutually agreeable schedule and procedure for inspection which will not jeopardize or delay performance of the CONTRACTOR's work, the CONTRACTOR will perform only standard factory tests. OWNER or its representative will be required to give its written approval of the results of the test or inspection, or if rejected, the reasons for such rejection, within 48 hours of such test or inspection.

2:19.3 Such factory inspection of Apparatus shall not relieve the CONTRACTOR from full responsibility for furnishing Apparatus conforming to the requirements of the CONTRACT nor prejudice any claim, right or privilege which the OWNER may have because of the use of defective or unsatisfactory Apparatus.

2:19.4 ENGINEER shall be furnished written notice from the CONTRACTOR at least 45 days in advance of the date that the tests will be conducted. Failure on the part of the OWNER or ENGINEER to witness any test at the time and place indicated in the notice shall not delay such test or the orderly fulfillment of the provisions of the CONTRACT.

2:19.5 The fact that the OWNER shall have witnessed or failed to witness such tests, or shall have failed to reject any part of the material or equipment shall not constitute a waiver or release by the OWNER of the CONTRACTOR's warranties under the CONTRACT. In the event the OWNER or ENGINEER fails to witness such tests after proper notice the CONTRACTOR may deem such test as having been witnessed and proceed with manufacture or shipment accordingly.

2:19.6 The CONTRACTOR shall be required to furnish, prior to shipment, a certification that the material or equipment and/or components thereof have passed CONTRACTOR's or supplier's standard shop inspections and tests and/or such specific types of shop tests as may be required by these specifications. Ten (10) copies of such certification, duly notarized and including pertinent test data shall be furnished to ENGINEER.

2:19.7 Should the OWNER waive its right to inspect any Apparatus, such waiver shall not relieve the CONTRACTOR in any way from its obligations under the CONTRACT.

2:20 CERTIFICATE OF COMPLETION AND EVIDENCE OF DELIVERY

2:20.1 The manufacture and inspection of the material or equipment shall be deemed complete when the material or equipment is properly prepared for export shipment and the CONTRACTOR shall have furnished to the OWNER a "Certificate of Completion of Manufacture and Inspection", in ten (10) copies, duly signed and notarized as follows:

> "We hereby certify that the manufacture and preparation for export shipment as specified in CONTRACT No. _____ _____ covering _____ for _____ has been completed and conforms in all respects to the requirements of the CONTRACT."

2:20.2 After completion of manufacture and inspection and upon delivery of any material or equipment f.o.b. ocean carrier, port of export, the CONTRACTOR, if requesting payment for shipped materials and equipment, shall present such satisfactory evidence of delivery as may be required by the Letter of Credit covering payment for said shipped material or equipment.

2:21 LOCAL MATERIALS

The CONTRACTOR shall use locally produced materials or products, cement, reinforcing bars and the like, when available, providing that such materials or products conform to these specifications.

2:22 LOCAL LABOR

The CONTRACTOR shall use local Indonesian personnel, skilled and unskilled to the greatest extent possible for work on the Project.

2:23 PAYMENT

Payment of the total contract price, to the CONTRACTOR for material, equipment and services provided according to the terms of this CONTRACT will be made in the same currencies as detailed in the price schedule as follows:

CONTRACTOR shall deliver the equipment originating in the U.S.A. to the OWNER, f.o.b. Ocean Carrier, Port of Export, with freight and insurance prepaid to the Jakarta Site. Partial deliveries shall be permitted. Upon delivery, title to the equipment shall pass to the OWNER, however, care, custody, control and risk of loss shall remain the responsibility of the CONTRACTOR until complete construction. CONTRACTOR shall act as OWNER's representative for shipping purposes and shall apply for any necessary export licenses on behalf of OWNER.

CONTRACTOR shall also arrange for all-risk (including war-risk) warehouse to warehouse insurance coverage for such equipment. Equipment will be shipped consigned to the OWNER. The cost of such shipment (excluding charges related to Indonesian import regulations or procedures) and insuring is included in the total price of the CONTRACT.

CONTRACTOR shall deliver the equipment originating in Indonesia to the OWNER at the Site. CONTRACTOR undertakes to prepare and prosecute insurance claims on behalf of the OWNER with respect to the insurance described above.

If any part of the equipment cannot be delivered when ready due to the Force Majeure paragraph 2:37, CONTRACTOR may place such equipment in storage. In such event, CONTRACTOR's delivery obligations shall be deemed fulfilled for purposes of payment and any amounts otherwise payable to CONTRACTOR upon delivery shall be payable upon presentation of required documentation and CONTRACTOR's certification that Force Majeure prevented actual delivery. CONTRACTOR shall notify OWNER of any equipment put into storage.

2:23.1 Payment for the total U.S. Dollar Contract price for the work detailed in the CONTRACT shall be made as follows:

The OWNER shall, within 45 days of the acceptance of the Proposal arrange for the establishment of an irrevocable letter of credit confirmed by a U.S. Bank in favor of the CONTRACTOR for the full amount of the dollar portion of the CONTRACT price.

The letter of credit shall be in accordance with the terms of payment of the CONTRACT. It shall be originally valid for two years from the date of issuance and permit payment to the extent of funds available. The letter of credit shall permit partial payment for material, equipment and supplies, delivered and work performed.

2:23.2 a. For One Hundred percent (100%) of the price to the CONTRACTOR of purchased material, equipment and supplies delivered and work performed, payment will be made as follows:

1. Ninety percent (90%) prorata of the C.I.F. value of material, equipment, spare parts and supplies that are to become a permanent part of the PROJECT will be paid when such articles are delivered fob Ocean Carrier, Port of Export, against CONTRACTOR's invoice and evidence of delivery, or alternatively against negotiable warehouse receipt if shipment is delayed for Force Majeure reasons and ninety percent (90%) of the cost of services completed including training in the U.S.A. against CONTRACTOR's invoice.

2. Ten percent (10%) of the C.I.F. value of the material, equipment, spare parts, and supplies and ten percent (10%) of services will be paid on completion of construction against CONTRACTOR's invoice and OWNER's certificate of performance and completion; provided however that if OWNER's certificate of performance and completion has not been given within 90 days of CONTRACTOR's written request therefore in lieu thereof the CONTRACTOR shall furnish his own signed certificate stating that 90 days have elapsed since the CONTRACTOR submitted his written request for the OWNER's certificate and the OWNER has not issued a certificate nor made written objection to the invoice.

b. For One Hundred percent (100%) of the construction costs in Indonesia payable in dollars, payment will be made on the basis of percentage of work actually physically completed, as follows:

1. Ninety percent (90%) of the construction costs attributable to the previous month on the basis of the percentage of work physically completed upon submission on or before the 15th day of each

calendar month during the continuance of the CONTRACT monthly invoices with supporting documents as specified in paragraphs 2:23.4. If OWNER or ENGINEER fails to execute and deliver a certificate of performance to CONTRACTOR within 45 calendar days after the date of submittal of an invoice to the OWNER or ENGINEER payment will be made against CONTRACTOR's own signed certificate stating that 45 days have elapsed since the CONTRACTOR submitted his invoice and neither the OWNER nor ENGINEER has issued a certificate of performance or made written objection to the invoice.

2. Ten percent (10%) of the construction costs will be paid on completion of construction against CONTRACTOR's invoice and OWNER's certificate of performance and completion; provided however that if OWNER's certificate of performance and completion has not been given within 90 days of CONTRACTOR's written request therefor in lieu thereof the CONTRACTOR shall furnish his own signed certificate stating that 90 days has elapsed since the CONTRACTOR submitted his written request for the OWNER's certificate and the OWNER has not issued a certificate nor made written objection to the invoice.

2:23.3 The CONTRACTOR's invoices for payment of material, equipment and supplies shall contain or be accompanied by the following information and authentication:

a. The amount due CONTRACTOR calculated at 90% of the invoice value as set forth above. Invoice shall show AID Loan Agreement Number and reference number of the CONTRACT.

b. Supplier's Invoice, in any, to the CONTRACTOR showing detailed cost of material, equipment and supplies to support CONTRACTOR's invoice.

c. Detailed Packing List.

d. Supplier's "Certificates of Completion of Manufacture and Inspection."

e. Clean On-Board Bill of Lading from Carrier or alternatively negotiable warehouse receipt.

f. Marine Insurance Certificate or alternatively negotiable warehouse receipt.

g. Consular Invoices (if required) or alternatively negotiable warehouse receipt.

h. AID Form 1440-3.

i. Such other documentation as AID may require.

2:23.4 CONTRACTOR's invoices for progress payment for construction costs shall contain, or be accompanied by, the following information and authentication:

a. AID Loan Agreement Number.

b. Reference number of this CONTRACT.

c. Total lump sum price.

d. Percentage completed to date.

e. Totals of all previous net billing.

f. Invoice amount showing portion of payment due in U.S. Dollars and portion due in Rupiahs.

g. Progress Payment Number.

h. The following certification:

"The undersigned certifies that the amounts payable to the CONTRACTOR in accordance with the terms of the contract, up to date of this certificate, are not less than the total payment received or claimed by the CONTRACTOR under the CONTRACT (including the payment claimed under this invoice), and that the CONTRACTOR has fully complied with the terms and conditions of the contract, including the plans and specifications".

Name Contractor Title

i. Contractor's Certificate and Agreement (form AID 1440-3) executed in accordance with instructions thereon.

j. An OWNER's or ENGINEER's Certificate of Performance or CONTRACTOR's Certificate as defined in Paragraph 2:23.2b1.

k. Such other documentation as AID may require.

2:23.5 Invoices submitted for final payment unless modified by conditions per paragraphs 2:23.2a2 and 2:23.2b2 shall contain as a minimum, all information and authentication enumerated above; and in addition, the following certificate of performance and completion:

"The undersigned certifies that the service (or equipment and materials) for which final payment is invoiced meets in all respects the specifications prescribed in the covering contract, and the amount invoiced is due and payable under the terms of the CONTRACT."

PERUSAHAAN UMUM LISTRIK NEGARA

By _____

Name Date

2:23.6 When payment for cancellation charges is claimed, the following documentation must accompany the invoices:

a. Written justification by the CONTRACTOR supporting in detail the claimed charges.

b. One of the following certifications:

1. Written concurrence by the OWNER to the CONTRACTOR's claim.

2. A certified copy of an arbitration award.

2:23.7 Indonesian Rupiah payments to the CONTRACTOR will be made by the Indonesian Treasury Office at Jakarta, within 15 days after submission of CONTRACTOR's invoices for progress payments. The Treasury Office will disburse

funds, from a special account opened in an Indonesian bank especially for this CONTRACT. Progress payments will be made in the amount of 90% of the rupiah value of construction completed during the preceding month recommended by the ENGINEER and certified by the OWNER. Final payments of the 10 percent withheld shall be made to the CONTRACTOR as those portions of the project are completed and transferred to the OWNER. This special account with the local bank will be opened within one month after the establishment of the U.S. Dollar Letter of Credit. After each disbursement to the CONTRACTOR an amount equal to the disbursement will be deposited in the special account within 10 days of disbursement to keep the special account at a fixed level; however not to exceed the total CONTRACT Rupiah price.

2:23.8 The CONTRACTOR will prepare, certify and deliver to the OWNER for approval on or before the 15 of each month, during the continuance of this CONTRACT, an invoice setting forth all local currency charges, computed as charges due the CONTRACTOR for his work during the previous calendar month. Such approval by OWNER or payment of invoices or acceptance of any payment by the CONTRACTOR shall not constitute a waiver of any claims for errors or omissions in Invoices or payments.

2:24 PAYMENTS TO MATERIALMEN AND SUBCONTRACTORS

The CONTRACTOR shall pay each materialman and each subcontractor, if any, the amount thereof allowed the CONTRACTOR for an on account of materials furnished or construction performed by each materialman or each subcontractor, CONTRACTOR warrants that all equipment and materials used or supplied under this CONTRACT shall be free from defects in title.

2:25 PROTECTION TO PERSONS AND PROPERTY

2:25.1 The CONTRACTOR shall at all times take all reasonable precautions for the safety of personnel on the Project and of the public, and shall comply with all applicable provisions of local safety laws and building and construction codes as well as the safety rules, construction codes and regulations of the OWNER including "Manual of Accident Prevention in Construction" published by Associated General Contractors of America, Inc.

2:25.2 The following provisions shall apply, but not limit the generality of above requirements:

a. The CONTRACTOR shall at no time and under no circumstances cause or permit any employee of the CONTRACTOR to perform any work upon energized equipment or rotating machinery.

b. The CONTRACTOR shall so conduct the construction of the Plant as to cause the least possible obstruction of public streets and highways.

c. The CONTRACTOR shall provide and maintain all such guard lights and other protection for the public as may be required by applicable statutes, ordinances, regulations and local conditions.

d. The CONTRACTOR shall do all things necessary to protect highways and all property of others from damage, and in the event that such highways or other property are damaged in the course of the construction of the Plant, the CONTRACTOR shall at its own expense restore all damaged property immediately to as good a state as before such damage occurred.

e. The Plant, from the commencement of work to completion, or to such earlier date or dates when the OWNER may take possession and control in whole or in part as hereinafter provided shall be under the change and control of the CONTRACTOR and during such period of control by the CONTRACTOR, all risks in connection with the construction of the Plant and the materials to be used therein shall be borne by the CONTRACTOR. The CONTRACTOR shall make good and fully repair all injuries and damages to the Project or any portion thereof under the control of the CONTRACTOR by reason of the CONTRACTOR's negligence. The CONTRACTOR shall hold the OWNER harmless from any and all claims for injuries to persons or for damage to property happening by reason of any negligence on the part of the CONTRACTOR or any of the CONTRACTOR's agents or employees during the control by the CONTRACTOR of the Project or any part thereof.

f. Any and all excess earth, rock, debris, underbrush and other useless material shall be removed by the CONTRACTOR from the Project site as rapidly as practicable as the work progresses.

g. Upon violation by the CONTRACTOR of any of the provisions of this paragraph after written notice of such violation has been given to the CONTRACTOR by the ENGINEER or the OWNER, the CONTRACTOR

shall immediately correct such violation. Upon failure of the CONTRACTOR to do so, the OWNER may correct such violation at the CONTRACTOR's expense: provided, however, that the OWNER may, if he deems it necessary or advisable, correct such violation at the CONTRACTOR's expense without such prior notice to the CONTRACTOR.

h. The CONTRACTOR shall submit to the OWNER monthly reports in duplicate of all accidents, giving such data as may be prescribed by the OWNER.

2:26 INDEMNITY

2:26.1 The CONTRACTOR shall indemnify and hold harmless the OWNER and ENGINEER, their agents, servants and employees from and against all claims, damages, losses and expenses (including attorney's fees) arising out of or resulting from the performance of the work, for bodily injury (including death) or damage to property (including destruction and loss of use) caused in whole or in part by any act or omission of the CONTRACTOR, any subcontractor, anyone directly or indirectly employed by any of them or anyone for whose acts any of them may be liable regardless of whether or not it is caused in part by a party indemnified hereunder.

2:26.2 The indemnification under this Paragraph shall not be limited in any way by any workmen's compensation acts, disability benefit acts, or other employee benefit acts.

2:26.3 The obligations of the CONTRACTOR under this Paragraph shall not extend to the liability of the ENGINEER, his agents, servants or employees arising out of the preparation or approval of plans, opinions, reports, surveys, designs, or specifications; on the on-site consulting or inspection services performed by the ENGINEER. his agents, servants, or employees, provided the performance of such on-site consulting or inspection is the primary cause of the injury or damage.

2:26.4 With the exception of tort (including negligence) the total liability of CONTRACTOR (including its subcontractors) or any claim arising out of or connected with or resulting from the manufacture, sale, delivery, resale, repair, replacement, or use of any product or the furnishing of any service shall not exceed the CONTRACT price.

2:26.5 In no event shall CONTRACTOR (or its subcontractors) be liable for any special or consequential damages including, damages for loss of revenue, cost of capital, claims of customers for service interruptions or failure of supply and costs and expense incurred in connection with labor overhead transportation or substitute facilities or supply sources.

2:27 CUMULATIVE REMEDIES

Every right or remedy herein conferred upon or reserved to the OWNER or AID shall be cumulative, shall be in addition to every right and remedy now or hereafter existing at law or in equity or by statute and the pursuit of any right or remedy shall not be construed as an election: provided, however, that the provisions of any Liquidated Damages Paragraph shall be the exclusive measure of damages for failure by the CONTRACTOR to complete the construction of the Project within the time herein agreed upon.

2:28 INDONESIAN SUBCONTRACTORS FOR WORK IN INDONESIA

2:28.1 All such subcontract work to be undertaken by subcontractors shall be let to qualified subcontractors. The CONTRACTOR shall not award any WORK to any subcontractor without prior approval of the ENGINEER, OWNER and AID.

2:28.2 The CONTRACTOR agrees that he is fully responsible to the OWNER for the acts and omissions of such subcontractors of persons either directly or indirectly employed by them as he is for the acts and omissions of persons directly employed by him.

2:28.3 The CONTRACTOR shall, at his expense, furnish the ENGINEER, OWNER and AID an unpriced copy of all such subcontracts.

2:28.4 The CONTRACTOR agrees to bind every subcontractor and every subcontractor shall be bound by the terms of these CONTRACT DOCUMENTS as far as applicable to his work, unless specifically noted to the contrary in a subcontract approved in writing by the OWNER and AID.

2:29 CONTRACTOR'S NON-INDONESIAN FIELD PERSONNEL

2:29.1 The CONTRACTOR shall provide and obtain OWNER approval of a complete list of personnel to be assigned to the field in support of the CONTRACT. Resumes of their background, experience and personal history shall be furnished sixty (60) days prior to their expected arrival at the job site. Not less than eighty percent (80%) of all persons who perform services under the contract at the site of construction, whether employed directly by the CONTRACTOR or by a subcontractor, shall, at any time, be citizens of the United States and of other eligible source countries, excluding from this computation however (1) citizens of Indonesia as determined under the law thereof; and (2) individuals who have been physically present in Indonesia substantially uninterrupted for a period, immediately preceding the date of any determination hereunder, of not less than three consecutive years.

2:29.2 Any personnel on the list found to be unsatisfactory by the OWNER shall be replaced with other personnel meeting the approval of the OWNER prior to dispatching such personnel to the field.

2:29.3 The OWNER's written permission must be obtained before personnel assigned to the WORK may be withdrawn. The CONTRACTOR's request for such permission shall state the duration of such withdrawal, which duration shall not be exceeded.

2:29.4 Personnel shall not be withdrawn, except for emergencies, if it will jeopardize the successful and timely completion of the WORK.

2:29.5 In the event the OWNER, after arrival of the CONTRACTOR's field personnel in Indonesia, shall notify the CONTRACTOR in writing that any of them are, in the OWNER's opinion, incompetent, unqualified or otherwise unsatisfactory, the CONTRACTOR shall replace them at the CONTRACTOR's own expense, with qualified personnel satisfactory to the OWNER. CONTRACTOR has the responsibility for the timely completion of the PROJECT. CONTRACTOR reserves the right and responsibility for furnishing qualified non-Indonesian personnel. Should any such incidents arise the CONTRACTOR and OWNER shall mutually resolve the incident in a manner which will not disrupt the CONTRACTOR'S work.

2:29.6 Any expenses associated with sickness of the CONTRACTOR's personnel including replacement of such personnel shall be borne by the CONTRACTOR.

2:29.7 Cost for travel of the CONTRACTOR's employees and their dependents between points of origin and Indonesia shall be at the CONTRACTOR's expense.

2:29.8 Cost of passports, visas, travel documents, innoculations and other incidental expenses for the CONTRACTOR's employees and their dependents occasioned by travel to the site of WORK shall be at the CONTRACTOR's expense.

2:29.9 The OWNER will not furnish living quarters for the CONTRACTOR's personnel.

2:29.10 The CONTRACTOR's employees may import for their personal use a reasonable quantity of household goods and personal effects. These goods and effects will be exempt from import duties and taxes (Paragraph 2:15.3) provided that those items not consumed are re-exported. The OWNER will be sole judge as to what constitutes a "reasonable quantity".

2:29.11 The CONTRACTOR's employees may import for their personal use, one automobile per family, which will be exempt from import duties and taxes (Paragraph 2:15.3) provided that the automobile will be re-exported.

2:30 REPORT OF DELAYS

In the event that circumstances or conditions arise which prohibit the CONTRACTOR from adhering to his proposed schedule for the Project, such circumstances or conditions must be reported promptly to the OWNER. The reasons for delays must be well defined and the steps being taken to avoid further delay must be described.

2:30.1 Progress Reports. Written monthly reports on the progress of the work shall be made to the OWNER and the ENGINEER.

2:31 LEGAL EFFECT OF CERTAIN AID APPROVALS

2:31.1 The parties hereto understand that AID has reserved certain approval rights including, but not limited to, the right to approve the terms of this CONTRACT, the CONTRACTOR, any or all plans, reports, specifications, subcontracts, bid documents, drawings or other documents related to this CONTRACT and the project of which it is part. The parties hereto further understand and agree that AID, in reserving any or all of the foregoing approval rights, has acted solely as a

lender to assure the proper use of United States Government funds, and that any decision by AID to exercise or refrain from exercising these approval rights shall be made as a lender in the course of financing this project and shall not be construed as making AID a party to the CONTRACT. The parties hereto understand and agree that AID may, from time to time, exercise the foregoing approval rights, or discuss matters related to these rights and the project of which this CONTRACT is part, with the parties jointly or separately, without thereby incurring any responsibility or liability to the parties jointly or to any one of them. Any amendments or changes in the CONTRACT must be in writing and approved by AID.

2:31.2 Any approval or failure to disapprove by AID of any plan, report, specification, contract, bid document, drawing or other documents shall not bar the BORROWER or AID from asserting any right, or relieve the CONTRACTOR of any liability which the CONTRACTOR might otherwise have to the BORROWER or AID, because of such plan, specification, contract, bid document, drawing or other document or any performance or failure of performance thereunder, or under any AID, CONTRACTOR's or Supplier's certificate.

2:32 DIVERSION AND VESTING RIGHTS OF AID

To the extent and as set out in the AID Loan Agreement financing the Project or related documents, if an event of default, breach of agreement or extraordinary situation shall occur or if disbursement by AID shall be unlawful, AID may direct that title to the commodities financed by it be transferred to AID. The CONTRACTOR shall abide by AID instructions with respect to delivery or diversion of such transferred commodities.

2:33 EQUAL OPPORTUNITY

These provisions apply to CONTRACTOR's employment of U.S. citizens or persons hired in the U.S. only.

During the performance of the CONTRACT, the CONTRACTOR agrees as follows:

a. The CONTRACTOR shall not discriminate against any employee or applicant for employment because of race, religion, creed, color, sex or national origin. The CONTRACTOR shall take affirmative action to insure

that applicants are employed and that employees are treated during employment without regard to their race, religion, creed, color, sex or national origin. Such action shall include, but not be limited to, the following: employment, upgrading, demotion or transfer, recruitment or recruitment advertising, layoff or termination, rates of pay or other forms of compensation and selection for training, including apprenticeship. The CONTRACTOR agrees to post in conspicuous places, available to employees and applicants for employment, notice to be provided by the OWNER setting forth the provisions of this nondiscrimination clause.

b. The CONTRACTOR shall, in all solicitations or advertisements for employees placed by or on behalf of the CONTRACTOR, state that all qualified applicants will receive consideration for employment without regard to race, religion, creed, color, sex or national origin.

c. The CONTRACTOR shall send to each labor union, if any, or representative of workers, if any, with which it has a collective bargaining agreement or other contract or understanding, a notice to be provided by the OWNER advising the said labor union or workers' representative of the CONTRACTOR's commitments under this Paragraph, and shall post copies of the notice in conspicuous places available to employees and applicants for employment.

d. The CONTRACTOR shall comply with all provisions of U.S. Executive Order No. 11246 of September 24, 1965, and of the rules, regulations and relevant orders of the U.S. Secretary of Labor.

e. The CONTRACTOR shall furnish all information and reports required for this form of CONTRACT by U.S. Executive Order No. 11246 of September 24, 1965, and by the rules, regulations and orders of the U.S. Secretary of Labor, and shall permit access to its books, records and accounts by the administering agency and U.S. Secretary of Labor for purposes of investigation to ascertain compliance with such rules, regulations and orders.

f. It is understood that in the event of the CONTRACTOR's noncompliance with the nondiscrimination clauses of the CONTRACT or with any of the said rules, regulations or orders, the CONTRACT may be cancelled,

terminated or suspended in whole or in part and the CONTRACTOR may be declared ineligible for U.S. Government financed contracts or Federally-assisted construction contracts in accordance with procedures authorized in U.S. Executive Order No. 11246 of September 24, 1965, and such other sanctions may be imposed and remedies invoked as provided in the said Executive Order or by rule, regulation or order of the U.S. Secretary of Labor, or as otherwise provided by law.

g. The CONTRACTOR shall include the provisions of this Paragraph in every subcontract or purchase order unless exempted by rules, regulations or orders of the U.S. Secretary of Labor issued pursuant to Section 204 of U.S. Executive Order No. 11246 of September 24, 1965, so that such provisions will be binding upon each subcontractor or vendor. The CONTRACTOR shall take such action with respect to any subcontractor or purchase order as the administering agency may direct, as a means of enforcing such provisions, including sanctions for noncompliance, provided, however, that in the event the CONTRACTOR becomes involved in, or is threatened with, litigation with a subcontractor or vendor as a result of such direction by the agency, the CONTRACTOR may request the United States to enter into such litigation to protect the interest of the United States.

2:34 PATENTS

The CONTRACTOR shall be responsible for all royalties, fees or claims for any patented device, process or procedure used or provided by him. He shall indemnify and hold harmless the OWNER, the ENGINEER and their directors, officers, representatives, agents and employees, or any of them as a result of or in connection with any claims or actions based upon infringement or alleged infringement of any patent by the CONTRACTOR, or out of the processes or procedures employed by the CONTRACTOR in connection with the performance of the CONTRACT, and the CONTRACTOR shall at his expense and exclusive authority promptly defend or take other remedial action against any such claim or action, provided that the CONTRACTOR's aforementioned obligations shall not apply to OWNER-furnished materials or processes, and provided, further, that the OWNER shall have notified the CONTRACTOR upon becoming aware of such claims or actions. With respect to any equipment not manufactured by CONTRACTOR, the patent indemnity given by the manufacturer thereof shall apply.

2:35 WARRANTIES

2:35.1 The CONTRACTOR warrants that material and equipment shall be free from defects in material and workmanship and shall be suited in all respects both to the purpose for which it is specified hereunder to be furnished and to all other uses for which it may be represented in writing by the CONTRACTOR to be suited and shall also warrant the successful operation of the material and euqipment or any part thereof, which is installed by the CONTRACTOR. The CONTRACTOR shall be fully responsible for the workmanlike, timely and economical performance of its services, if any, in accordance with the terms of the CONTRACT. Material or equipment not conforming to the requirements of the CONTRACT will not be accepted, except as otherwise agreed upon at the OWNER's absolute discretion.

2:35.2 If the material or equipment, or any parts thereof, shall prove to be damaged or defective in any respect within the warranty period of one (1) year after completion of construction of the Project but in any event not longer than 24 months from date as defined in Paragraph 2:20.1 of the last major piece of equipment which is actually installed; provided however that in the event completion of construction is delayed for reasons solely attributable to the CONTRACTOR said 24 months shall be extended by a period coequal with such period of delay. The CONTRACTOR shall supply new replacement for any such damaged or defective material or equipment or parts thereof at no cost to the OWNER and in a manner satisfactory to the OWNER; provided, however, that the CONTRACTOR shall have no such obligation with respect to damage to the material or equipment from causes beyond the CONTRACTOR's reasonable control. Should the CONTRACTOR fail to replace, as above, damaged or defective material or equipment within a reasonable time after notice of such damage or defect, the OWNER may repair or replace such damaged or defective material or equipment at the CONTRACTOR's expense. If the CONTRACTOR requests the return of defective part or parts, they will be returned to him at his expense.

2:35.3 In connection with the material or equipment, or parts thereof which, as stated in this Warranties Paragraph above, have been replaced by the CONTRACTOR, the CONTRACTOR's guarantee under this section for the material or equipment, or part thereof replaced, shall extend the warranty for the same time period as originally warranted. Time for extension shall be from the date of installation of such replaced material or equipment or part thereof.

2:35.4 CONTRACTOR's obligations under paragraph 2:35.2 shall not apply to any equipment which is normally consumed in operation, such as lamps, indicating lights, oil, etc. or has a normal life inherently shorter than the warranty period stated above such as spark plugs, filters, etc.

2:36 ASSIGNMENT OF GUARANTEES

All guarantees of materials, equipment and workmanship running in favor of the CONTRACTOR shall be transferred and assigned to the OWNER prior to the time the CONTRACTOR receives final payment.

2:37 FORCE MAJEURE

2:37.1 If the CONTRACTOR is temporarily unable, wholly or in part, by force majeure to perform his duties and responsibilities under the CONTRACT, it is agreed that when notice and full particulars in writing of such force majeure is given to the OWNER by the CONTRACTOR as soon as possible after the occurrence of the cause relied on, the duties and responsibilities of the CONTRACTOR so far as they are affected by such force majeure shall be suspended during the continuance of any inability so caused but for no longer period, and such cause shall, as far as possible, be removed with all reasonable dispatch. Neither party shall be liable to the other for delays caused by force majeure. The term "force majeure" as employed herein shall mean acts of God, strikes, lockout, or other industrial disburbances, acts of public enemy, wars, blockades, insurrections, riots, epidemics, landslides, earthquakes, storms, lightning, floods, washouts, civil disturbances, explosions and any other causes similar to the kind herein enumerated or equivalent force, not within the control of either party and which by the exercise of due diligence neither party is able to overcome.

2:37.2 If the CONTRACTOR is permanently prevented wholly or in part by reason of force majeure or other cause from performing under the CONTRACT the OWNER or CONTRACTOR shall have the right to terminate the CONTRACT immediately upon giving notice and full particulars of such force majeure or other cause in writing to the other party as soon as possible after occurrence of the cause relied on. In such event the CONTRACTOR shall be entitled to the costs referred to in the termination for the convenience of the OWNER paragraph. Any continuous period of suspension in excess of sixty (60) days shall be deemed permanent.

2:38 SECURITY

The CONTRACTOR agrees not to communicate, disclose or use in advertising, general publicity or sales propaganda, photographs or other reproductions of the WORK covered by the CONTRACT, or description of the size, dimensions, quantity or quality or other information concerning the WORK unless the written permission of the OWNER in such instances has been obtained.

2:39 BOOKS AND RECORDS

The CONTRACTOR shall maintain adequate books and records concerning transactions under or in connection with the CONTRACT and shall make them available for inspection and audit by AID in its own right or on behalf of the OWNER (or AID authorized agents or representatives) during the CONTRACT term and for a period of three (3) years after final payment under the CONTRACT, to insure compliance with the requirements of the CONTRACT between the OWNER and the CONTRACTOR. Fixed-price (lump sum or unit price) CONTRACTS will not be subject to audit as to the cost except for termination claims. They will only be subjected to audit for compliance with source and origin, transportation and comparable requirements.

SECTION III

SPECIAL CONDITIONS

3:1 EXPERIENCE WITH EQUIPMENT OFFERED

The BIDDER must be able to demonstrate that the Gas Turbine Unit, alternator, switchgear, control system, governing system and auxiliary equipment offered have performed satisfactorily as a packaged electric generating system in stationary utility power plants as follows:

Operational experience with three or more units similar in size and design to the unit specified herein, each with 18,000 hours or more of operating time over a three year period on fuel oil as specified herein and under similar load, operating and climatic conditions will be acceptable. Either 50 or 60 hertz alternating current service is considered acceptable.

The BIDDER shall furnish with his bid written certification by an official of the firm manufacturing the gas turbine being offered that the unit meets all of the requirements for operating experience as described above. Included in this certification statement shall be a list of at least three gas turbine installations as defined above showing for each installation the following information: Owner and location of the installation; date of the initial operation; type of duty; type of fuel; base and peak ratings; and total operating hours on base and peak ratings.

3:2 SUPERVISION AND INSPECTION

3:2.1 The CONTRACTOR shall cause the construction work on the Project to receive constant supervision by a competent superintendent (hereinafter called the "Superintendent") who shall be present at all times during working hours where construction is being carried on and until construction and testing is completed. The CONTRACTOR shall also employ, in connection with the construction of the Project, capable, experienced and reliable foremen and such skilled workmen as may be required for the various classes of work to be performed. Directions and instructions given by the OWNER or ENGINEER to the Superintendent shall be interpreted as having been given to the CONTRACTOR.

3:2.2 The OWNER or the ENGINEER shall have the right to reach mutual agreement with the CONTRACTOR to increase the number of its employees and to increase or change the amount or kind of tools and equipment if at any time the progress of the work shall be unsatisfactory to the OWNER or ENGINEER; but the failure of the OWNER or ENGINEER to give any such directions shall not relieve the CONTRACTOR of his obligation to complete the work within the time and in the manner specified in this Proposal.

3:2.3 The manner of construction of the Project, and all materials and equipment used therein, shall be subject to the inspection, tests and approval of the OWNER and AID. CONTRACTOR shall furnish all information required by the OWNER and AID concerning the nature or source of any materials incorporated or to be incorporated in the Project. The CONTRACTOR shall have an authorized agent accompany the ENGINEER when final inspection and test of the Project is made and, if requested by the OWNER, when any other inspection is made.

3:3 SERVICES OF INSTRUCTOR

The CONTRACTOR shall also provide the services of an Instructor to conduct a concentrated operation and maintenance instruction course for the OWNER's personnel for a 30-day period starting with the final testing of the gas turbine unit and auxiliary equipment.

The OWNER has the option to extend the time of the Instructor for an additional 180 days maximum.

The BIDDER shall state under a supplementary bid item (not included in the lump sum price) the amount by which the CONTRACT price shall be increased for each day of services authorized by the OWNER over and above the 30-day period. This price shall include the salary and the traveling, living and all other expenses of the instructor.

3:4 FACTORY TRAINING

The CONTRACTOR shall make all necessary arrangements for an operation and maintenance training program for the OWNER's personnel at the plant of the manufacturer of the gas-turbine generator unit being furnished for this project. The training program shall be conducted by the ~~unit manufacturer's personnel~~ and shall preferrably be conducted ~~during the~~ fabrication and assembly of the unit being

Training shall include but not be limited to coverage of basic theory of gas turbine engineering, its controls and "trouble shooting"

furnished for this project. The lump sum price shall include the training of (3) three OWNER's Project Site Engineers for a period of 90 calendar days for each man. The lump sum price shall include all travel expenses from Indonesia to the manufacturer's factory training area and return, and necessary local travel to and from training locations and residence during the entire training period. Air travel shall be via economy class on American carriers where available. The lump sum price shall also include a per diem of U.S. $25.00 each for (3) three men for a period of 90 calendar days per man. The 90 calendar days shall include travel time.

3:5 TESTS FOR GUARANTEES WITH PENALTIES

3:5.1 During the final acceptance test, efficiency tests shall be run to determine if equipment meets guaranteed values. In the event the tests show that the equipment does not meet guaranteed values, the CONTRACTOR may within 30 days, on notice to the OWNER, make such adjustments as the CONTRACTOR deems necessary and rerun the tests. Duration of these tests shall be:

Efficiency Tests.

1. Two hours at full base load

2. For the 50 percent and 75 percent load points the CONTRACTOR will make necessary adjustments or modifications to bring those performance points within a tolerance of 2 percent of estimated performance listed in paragraph 4.8 but not subject to penalty.

3:5.2 Penalty for failure to meet fuel guarantees shall be computed as follows and deducted from final payment.

Load	Hrs. Per Year	Fuel Penalty in U.S. Dollars
Full Base	4000	280 x KWg (Fa - Fg)

Where KWg = Guaranteed KW base load service net output at 100% rating of gas turbine, given in the "CONTRACTOR'S PROPOSAL."
Fa = Actual fuel rate from final acceptance tests in lbs/KWH
Fg = Guaranteed fuel rate in lbs/KWH as calculated from guaranteed heat rates operating at stated loads given in the "CONTRACTOR'S PROPOSAL."

Fuel penalty constants were obtained by multiplying hours per year of operation by the load by five years by the fuel cost of 0.014 U.S. Dollars per pound for fuel having a high heat value of 19,100 BTU per pound.

3:5.3 Base Load Output Penalty: Penalty for failure to meet the gas-turbine generator guaranteed base load output shall be computed as follows and deducted from the final payment.

Deduction = (KWg – KWa)/KWg x Lump Sum Price in Total U.S. $ Equivalent.
KWg = Guaranteed KW base load service net output at 100% rating of gas-turbine, given in the "CONTRACTOR'S PROPOSAL."
KWa = Actual net KW base load output of gas-turbine from final acceptance tests.

3:5.4 All penalties shall be paid in U.S. Dollars.

3:6 CODES AND STANDARDS

All equipment, materials and construction shall, where applicable, comply with the following codes and standards in their latest revision:

American Association of State Highway Officials.
American Concrete Institute.
American Gear Manufacturers Association.
American National Standards Institute.
American Petroleum Institute.
American Society of Mechanical Engineers.
American Society for Testing Materials.
American Welding Society.
Institute of Electrical and Electronics Engineers
National Electrical Manufacturers Association.
National Fire Protection Association.

3:7 DRAWINGS

The CONTRACTOR shall submit to the ENGINEER for information, comment and record, (4) four complete sets of drawings for all items of equipment furnished on this project. Included shall be detail drawings, general arrangement drawings, charts, pictures, etc.

3:8 LIQUIDATED DAMAGES

3:8.1 The time of completion of the contract is of the essence. Should the CONTRACTOR neglect, refuse, or fail for reasons not excused under Force Majeure (Paragraph 2:37) to complete the construction within the time herein agreed upon after giving effect to extensions of time for reasons of Force Majeure, if any, then, in view of the difficulty of estimating with exactness damages caused by such delay, the OWNER shall have the right to deduct from and retain out of such monies which may be then due or which may become due and payable to the CONTRACTOR, the sum of one thousand U.S. Dollars ($1000) per day for each and every calandar day that such construction is delayed in its completion beyond the specified time as liquidated damages and not as a penalty provided however that the total collected hereunder shall not excede 5% of the total equivalent U.S. Dollars lump sum of Item 1, Paragraph 4:11. If the amount due and to become due from the OWNER to CONTRACTOR is insufficient to pay in full any such liquidated damages the CONTRACTOR shall pay to the OWNER the amount necessary to effect such payment in full provided however that the OWNER shall promptly notify the CONTRACTOR in writing of the manner in which the amount claimed as liquidated damages was computed.

3:9 OPERATING INSTRUCTION BOOKS, MAINTENANCE MANUALS AND PARTS LISTS WITH PRICES

Eight (8) sets of operating Instruction Books, Maintenance Manuals and Parts Lists with prices shall be furnished to the ENGINEER for distribution. This material shall be in sufficient detail to enable the OWNER to clearly understand the function of the equipment, dismantle and make proper adjustments. They shall be furnished for gas turbine, generator equipment and accessories and all plant auxiliary equipment. The English language shall be used in all written material furnished under this paragraph. All dimensioning shall be in the English system and where possible the metric system also.

3:10 SPARE PARTS

Spare parts as recommended for 15,000 hours of operation shall be quoted for each item of equipment furnished for this Project. Price lists for all spare parts shall be furnished, but the price for recommended spare parts shall not be included in lump sum bid price and will not be considered in the evaluation of bids.

3:11 SPECIAL TOOLS

A complete set of special maintenance tools shall be supplied with equipment as specified in Section VI of these specifications. The price for these tools shall be included in lump sum bid price.

SECTION IV

CONTRACTOR'S PROPOSAL

TO: Ministry of Public Works and Power, Represented by
Perusahaan Umum Listrik Negara
Attention: Ir Bagoes Moedijantoro, Director for Construction
Kebayoran Baru
Jakarta, Indonesia

4:1 OFFER TO FURNISH AND INSTALL

The undersigned (hereinafter called the "BIDDER") hereby proposes to furnish all materials and equipment, all machinery, tools, labor, transportation and other means required to construct and place in operation Gas Turbine Electric Generating Units designated as Jakarta Gas Turbine Plant, AID Loan No. 487-H-030 in strict accordance with the Plans, Specifications and Construction Drawings and other conditions of these Contract Documents for the prices hereinafter stated.

4:2 NON-COLLUSIVE BIDDING CERTIFICATION

4:2.1 By submission of this bid, each BIDDER and each person signing on behalf of any BIDDER certifies, and in the case of a joint bid each party thereto certifies as to its own organization, under penalty of perjury, that to the best of his knowledge and belief:

a. The prices in this bid have been arrived at independently without collusion, consultation, communication, or agreement, for the purpose of restricting competition, as to any matter relating to such prices with any other BIDDER or with any competitor;

b. Unless otherwise required by law, the prices which have been quoted in this bid have not been knowingly disclosed by the BIDDER and will not knowingly be disclosed by the BIDDER prior to opening, directly or indirectly, to any BIDDER or to any competitor; and

c. No attempt has been made or will be made by the BIDDER to induce any other person, partnerhsip or corporation to submit or not to submit a bid for the purpose of restricting competition.

4:2.2 **A bid shall not be considered for award where Paragraph 4:2.1 (a), (b) and (c) above have not been complied with; provided however, that if in any case the BIDDER cannot make the foregoing certification, the BIDDER shall so state and shall furnish with the bid a signed statement which sets forth in detail the reasons therefor.**

Where Paragraph 4:2.1 (a), (b) and (c) above have not been complied with, the bid shall not be considered for award unless the OWNER or his representative determines that such disclosure was not made for the purpose of restricting competition. The fact that a BIDDER (1) has published price lists, rates, or tariffs covering items being procured, (2) has informed prospective customers of proposed or pending publication of new or revised price lists for such items or (3) has sold the same items to other customers at the same prices being bid, does not constitute, without more, a disclosure within the meaning of Paragraph 4:2.1.

4:3 TIME AND MANNER OF CONSTRUCTION

4:3.1 The BIDDER agrees to start work upon receipt of an irrevocable letter of credit which is in accordance with the CONTRACT. The BIDDER further agrees to prosecute diligently and to complete construction in strict accordance with the Plans, Specifications and Construction Drawings within three hundred sixty five (365) calendar days after receipt of an irrevocable letter of credit: provided, however, that the BIDDER will not be required to perform any construction on such days when in the judgement of the ENGINEER rain or wind, or the result thereof make it impracticable to perform any operation of construction. To the extent of the time lost due to the conditions described herein and approved in writing by the ENGINEER and to the extent of the time lost due to Force Majure, Paragraph 2:37, the time of completion set out above will be extended if the BIDDER makes a written request therefor to the OWNER stating full particulars.

4:3.2 The OWNER, acting through the ENGINEER and with the approval of AID, may from time to time during the progress of the construction of the Plant make such changes, additions to or subtractions from the Plans, Specifications, Construction Drawings, as conditions may warrant: provided, however, that if any change in the construction to be done shall require an extension of time, a reasonable extension will be granted if the BIDDER shall make a written request therefor to the OWNER within thirty (30) days after any such change is made; and provided further, that if the cost to the BIDDER of construction of the project shall be materially increased or decreased by any such change or addition, the BIDDER shall propose an equitable adjustment which will be subject to acceptance by OWNER and approved

by AID, but no claim for additional compensation for any such change will be considered unless the BIDDER shall have made a written request therefor to the OWNER prior to the commencement of work in connection with such change or addition. In the event that equitable adjustment for such change cannot be agreed to, the matter will be resolved in accordance with the Disputes and Arbitration paragraph.

4:4 ERRORS AND OMISSIONS BY BIDDER

No errors or omissions in BIDDER's proposal shall relieve him from full compliance with these specifications or be deemed reason for any change in the bid price.

4:5 ADDENDA

The BIDDER acknowledges receipt of the following Addenda and this Proposal is made in accordance with these Addenda:

Addendum No.	Title	Date

(Use separate sheets, if necessary. If none, write NONE in blank space above.)

4:6 EXCEPTIONS

The BIDDER qualifies this Proposal by the following exceptions, variations or limitations and acknowledges that some of these items may constitute a material modification and the Proposal may be unresponsive and may be disqualified:

(Use separate sheets, if necessary. If none, write "None" in blank space above).

4:7 BID BOND OR OTHER SECURITY

Accompanying the original of this proposal is a _____ (Bid Bond, Letter of Credit, _____ in the amount of _____ Certified Check, etc.) dollars ($_____) to guarantee that the BIDDER will, if his Proposal is accepted, enter into the Contract and furnish Performance and Payment Bonds or other security according to Paragraph 1:10.

4:8 GUARANTEED GAS TURBINE GENERATOR PERFORMANCE

The guaranteed net output and heat rate of each gas turbine at 100% peaking and base load and the expected net output and heat rate at 75% and 50% of these ratings when operating at site conditions of 98°F, 5 feet elevation above sea level, at rated voltage and 0.80 power factor and based on the fuel oil as specified herein shall be as follows:

Peaking Service Net Output		Heat Rate		Thermal Efficiency
100% _____	KW _____	BTU/KWH _____		%
75% _____	KW _____	BTU/KWH _____		%
50% _____	KW _____	BTU/KWH _____		%

Base Load Service Net Output

100% _____	KW _____	BTU/KWH _____	%
75% _____	KW _____	BTU/KWH _____	%
50% _____	KW _____	BTU/KWH _____	%

Net output as used herein refers to the power output of the unit at the package plant terminals before connection to the main step-up power transformer. Power requirements of the gas turbine generator unit and package accessories are considered to be part of the gross output and not a part of the net output.

4:9 EVALUATION OF PROPOSALS

Proposals will be evaluated on the basis of compliance with specifications and the cost per KW of guaranteed base load service net output after adjustment for fuel consumption. The following procedures will be used to obtain the cost per KW including fuel consumption over a five year period for each unit complying with the specifications.

a. Fuel Consumption

Fuel consumption of the unit will be based on quoted guarantees while operating at the following number of hours per year:

Full	4000

b. Fuel Cost Calculation

Fuel cost will be determined by using 0.014 U.S. Dollars per pound of fuel having a high heat value of 19,100 BTU per pound. An adjustment equal to five years fuel cost will be assessed each bid.

c. Adjusted Bid Price Comparison

The adjusted bid price used for evaluation will be determined by adding to the lump sum bid price of Item 1, Paragraph 4:11 the amount of the adjustment for fuel consumption as stated above and dividing by the 100% base load service net output of the unit in kilowatts to give a cost per KW including fuel costs over a five year period. Formula for bid price adjusted for fuel is as follows:

$$\frac{\text{Item 1} + (5 \times 4000 \times Fg \times 0.014 \times KWg)}{KWg}$$

Where Item 1 is lump sum see Price Schedule 4:11.1 total U.S. dollar equivalent.

KWg is guaranteed net output of 2 units at 100% base load service in KW. Fg is guaranteed fuel rate in lbs per KWH as calculated from guaranteed heat rate and 19,100 BTU per pound of fuel.

4:10 CONVERSION RATE FOR CALCULATING EQUIVALENT PRICES

For purposes of calculating equivalent prices in U.S. Dollars in the Price Schedule, and for calculating the amount of Bonds or other Guarantees required, the BIDDER shall use a conversion rate of 415 Rupiahs equal to One U.S. Dollar. It is understood that this rate is to be used for aforementioned purposes only and that the schedule prices offered in Rupiahs and U.S. Dollars are firm, regardless of any currency fluctuations or exchange rates.

4:11 PRICE SCHEDULE

4:11.1 Item 1: Lump Sum Price in the Price Schedule shall, for two units, include all items of equipment and work furnished, delivered, installed, tested and placed in operation in accordance with these Contract Documents, including but not limited to the two gas turbine generating units, the fuel treatment equipment, power transformers, remote control panels and all required wiring, connecting lines and required terminal structures, lightning arresters, power circuit breakers, air break switches, grounding system, special tools, Training Instructor for a 30-day period, and factory training.

4:11.2 Item 2 in the price schedule shall be the amount per calendar day for services of instructor at job site beyond the 30-day period.

4:11.3 Item 3 in the Price Schedule shall be the amount for furnishing and delivering to the job site spare parts as recommended by the manufacturer for 15,000 hours operation of the plant offered. Detailed lists of spare parts giving quantity, description, unit and extended price for each part shall be submitted. The OWNER reserves the right to modify the quantities of spare parts offered and to contract for more or less quantity of any or all individual spare parts at the unit prices stated for such part.

PRICE SCHEDULE

ITEM NO.	DESCRIPTION	PRICE		
		Rupiah Rp.	U.S. Dollar $	Total U.S. $ Equivalent $
1.	Lump Sum Price for Two Units.			
2.	Price per calendar day for Instructor beyond the 30 day period.			
3.	Price for furnishing and delivering spare parts as recommended by the manufacturer for 15,000 hours of operation of each of the two units as offered (Use separate sheets to detail quantity, description and price referring to Item 3 of the Price schedule and sign each sheet).			

_____
Bidder

By _____
(Name Typed)

Title _____

_____

_____
(Official Mailing Address for Notices, etc.)

ATTEST:

By _____
(Name Typed)

Title _____

Date _____

The Proposal must be signed with the full name of the BIDDER. If the BIDDER is a partnership, the Proposal must be signed in the partnership name by a partner or authorized representative. If the BIDDER is a corporation, the Proposal must be signed in the corporate name by a duly authorized officer and the corporate seal affixed and attested by the Secretary of the Corporation.

Attached notarized "Power of Attorney".

SECTION V

ACCEPTANCE OF PROPOSAL

The **OWNER** hereby accepts the foregoing Proposal of the **BIDDER**, _____ _____ ,for furnishing, delivering, installing, testing and placing in service **Jakarta Gas Turbine Plant** for prices as stated in the Price Schedule, Item Numbers _____ _____ along with Spare Parts, Item Number 3 in quantities detailed on attached sheets numbered V - 2 thru V

The total contract price is U.S. $ Equivalent _____

comprised of: U.S. $ _____

and Rp. _____

Ministry of Public Works and Power
REPRESENTED BY

PERUSAHAAN UMUM LISTRIK NEGARA

OWNER

By _____

Ir. Bagoes Moedijantoro
Director for Construction

Attest: _____ _____

Date of Contract

SECTION VI

EQUIPMENT AND MATERIALS

6:1 SCOPE OF WORK

6:1.1 These specifications cover the furnishing, delivering and installing of two (2) complete automatically controlled industrial type gas turbine-generator packaged power plants with all accessories and housing, completely assembled, installed, tested and ready for commercial operation. These units shall be complete with fuel, lubrication and cooling systems, electric equipment, mechanical and electrical controls and instrumentation, with required piping and wiring. These specifications also cover furnishing, delivering and installing plant auxiliary equipment and material to serve these units. These auxiliary items shall include fuel oil supply system beginning at the suction side of the fuel forwarding pump, fuel treatment system, and all miscellaneous piping to the gas turbine package; also included are step-up transformers, 70 kV cable entrenched 152 meters long each overhead 70 kV lines from transformer high tension terminals to existing switchyard, power circuit breakers, and disconnect switches to connect to the existing 70 kV double bus system. See drawing attached.

6:1.2 OWNER will provide all equipment foundations, and will perform all the necessary earthwork.

Site preparation and general civil works. CONTRACTOR shall furnish the OWNER within 45 days after opening of irrevocable letter of credit:

a. COMPLETE DESIGNS (Working drawing) for all EQUIPMENT FOUNDATIONS. These drawings shall be completely dimensioned, showing location of all foundation Bolts, Cut-Outs, steel reinforcing etc.

b. LOADING REQUIRED (Soil Bearing) for each foundation.

6:2 OPERATING CONDITIONS

6:2.1 Location: Unit shall be completely housed and weatherproofed for installation outdoors.

6:2.2 Service: Continuous.

6:2.3 Ambient Conditions: Temperature 50° to 105°F, Relative Humidity 83%.

6:2.4 Elevation: 5 feet above sea level.

6:2.5 **Electrical: To connect to an existing 70 kV (nominal), 50 hertz distributing system.**

6:3 EQUIPMENT RATING

6:3.1 **Rating, Continuous - 19,000 to 27,000 kW at site conditions of 98°F ambient and 5 feet elevation.**

6:3.2 Voltage - 11,500 volts.

6:3.3 Frequency - 50 hertz

6:3.4 Phases - 3 Phase.

6:3.5 Power Factor - 0.80

6:3.6 Fuel. - Fuel oil as specified in the following paragraph on fuel analysis.

6:4 FUEL ANALYSIS

Following are the characteristics of the fuel oil designated Industrial Diesel Oil available for gas-turbine usage.

TEST	
Gravity A.P.I. @ 60°F	32.3
Specific Gravity @ 60°F	0.864
Specific Gravity @ 100°F	0.849
Viscosity, S.S.U. @ 100°F. secs.	40
Conradson Carbon (10% bottoms) %	0.66
Flash Point (Pensky Marten) °F.	160
Pour Point °F.	55
Cetane Number	40.0
Water %	0.01
Sediment, %	0.2
Ash, %	0.02
B.T.U. Per Pound, gross	19,100
Distillation 90% Point °F	670
Sulphur, %	0.50
Vanadium ppm	1.0
Sodium ppm	4.4
Calcium ppm	1.0

Fuel treatment equipment is required to reduce the sodium level to or below 0.5 ppm. The Bidder shall list the items of treatment equipment to be furnished. (See Paragraph 6:5.6 in this Section for details.)

6:5 GAS TURBINE

6:5.1 General: The turbine shall be simple cycle, one shaft industrial type designed for power generation. Unit shall be axial flow type with axial flow compressor and integral combustion system. The gas power turbine element shall be designed to withstand quick starting and rapid changes of load. The unit shall preferably be of horizontally split case construction for convenience in maintenance and shall permit access to blading without undue difficulty. Guides shall be provided where necessary to prevent damage to blading while moving the casing. Lifting lugs, eyes and all attachments required for lifting shall be provided. Casing design shall minimize the possibility of distortion under operating conditions. The cooling system and lagging shall maintain the casing temperature within proper limits.

The bearings supporting the rotors shall be readily accessible and replaceable. The thrust bearing shall be self-aligning and adequate for positioning of the shaft. Bearings shall be pressure lubricated. Seals shall be provided to prevent oil leakage into the gas passages and leakage of gas. Provisions shall be made to enable turbine seals to be examined and replaced without dismantling of casings. Glands shall be designed to preclude leakage of gas.

Blading shall be designed to avoid the possibility of damage from vibration and to minimize the effect of any slight rubbing. Construction of blading shall be such that any portion can be renewed at the site.

The complete turbine rotor shall be dynamically balanced and shall be tested to an overspeed of at least 15%.

The combustion chamber lining shall be of suitable heat resistant material and the chamber shall be externally cooled by combustion air from the compressor.

The chamber shall be designed to insure stable flame throughout the operating range. Gas passages shall be designed to prevent overheating of turbine blading by radiation from the flame. The preferred operating speed of the power turbine and generator is 3000 rpm. However, the use of speed reduction gears will be acceptable.

6:5.2 **Materials and Quality of Construction: The materials used for every component covered by this specification shall be new and of the best quality for the given service and specified for long life at the very high temperatures and stresses occurring with such units. The craftsmanship shall be of high degree throughout. All parts shall be manufactured to accurate dimensions. Rotating parts shall be carefully balanced statically and dynamically after machining.**

6:5.3 Gearing: If a speed change is required between the turbine drive shaft and generator, an offset type of speed reduction gear system shall be provided for coupling the two together. The gearbox shall be arranged for ease of access and the case shall be split horizontally. The gear system shall be sized for the full short circuit torque of the generator.

6:5.4 Starting System: The starting system shall include a diesel engine driver, all necessary auxiliaries, controls and automatic disengaging clutch. The unit shall be capable of start-up and cool-down when no outside source of power is available. Included shall be direct-current operated equipment where needed, controls, storage battery and battery charger. The manufacturer shall state power requirements of the starting devices and shall provide necessary details as to equipment that will be furnished to assure independent or "black start" ability.

6:5.5 Ignition System: The ignition system shall include at least two automatically controlled retractable spark plugs, ignition transformer, interconnecting wiring and interconnectors to carry the flame to other combustors in the event of spark plug malfunction.

6:5.6 Fuel System: The gas-turbine generator unit shall be capable of starting and operating continuously at maximum load on the fuel oil as specified in the paragraph on Fuel Analysis. The fuel oil system shall include fuel oil stop valve, shaft-driven fuel oil pump, fuel oil flow divider metering system to the nozzles, atomizing fuel oil nozzles, fuel oil pressure tap for each nozzle with nozzle selector valve and one pressure gauge, atomizing air compressor, meter for measuring fuel oil consumption, high capacity, 10 micron, duplex-type filter, pressure gauges as needed and a complete piping system. Fuel oil transfer pumps with all valves, filters and other accessories as required shall be furnished by the gas turbine generator unit manufacturer taking suction from the fuel oil storage tanks and discharging to the new gas turbine at the pressure and flow required. A standby pump or pumps shall be provided. Fuel pumps shall have AC/DC motors for emergency operation.

All valves, controls, piping, etc. shall be furnished and installed.

Fuel oil shall be treated and treatment equipment shall be furnished. The treatment system shall be completed with all necessary pumps, piping, tanks, controls and other accessory equipment. The treatment system shall be provided with by-pass piping and valving to permit operation of the gas turbine on untreated fuel oil during down time of the treatment system. The treatment system shall be sized to handle fuel oil requirements of the new units and another 20 MW unit at the site. For calculating size of oil treatment equipment to be provided, a 100% load factor shall be used for all three units.

both

6:5.7 Lubrication System: A complete lubricating oil system shall be included to serve the gas generator, power turbine, generator, reduction gear and accessory gear. System shall be complete and include as a minimum - oil reservoir, shaft mounted main oil pumps, emergency a-c motor driven pump, emergency d-c motor driven pump, oil cooler, oil heater, full flow oil filters, relief valves, level indicator and alarms, pressure gauges, thermometers and complete piping system as required.

6:5.8 Cooling System: A radiator type closed loop lube oil cooler shall be furnished. An air to oil cooler is preferred. However, water may be used as a cooling media. The cooling system shall be designed for ambients of 50°F to 105°F. The cooling system shall be complete with all accessories, piping and valving as needed. Thermostatically controlled louvers shall be included.

6:5.9 Governor: The governor must be capable of permitting the gas turbine unit to operate in parallel with other system generating equipment. The Governor system shall include but not be limited to the following function or devices:

a. Speed sensing devices and speed control governor, shaft driven.

b. Separate emergency overspeed trip device to stop the flow of fuel to the nozzles in case of excessive over-speed.

c. Load limiting device.

6:5.10 Inlet and Exhaust:

a. Ducts: Unit shall be supplied with self-supporting air inlet and exhaust ducts arranged to minimize recirculation. The vertical parts shall be equipped with adequate drain arrangements and all parts shall be resistant

to corrosion or suitably protected for that purpose. Dampers shall be provided if required for inlet and exhaust ducts to protect them from weather when unit is inoperative. Dampers shall be fully open when the unit is running regardless of the amount of air flow. The inlet shall be protected by louvers if necessary to assure efficient operation of the unit under all weather conditions.

b. Air Cleaning System: Inlet filtering equipment shall be provided and designed to remove atmospheric contamination to the extent necessary for protection of the turbine equipment. The system shall be equipped with pressure measuring devices to indicate degree of filter contamination. Blow-in doors or other means shall be provided to protect the unit in the event of filter blockage. Filters shall be of the self-cleaning or the self-renewing type, operating automatically.

c. Inlet and Exhaust Silencing: Inlet and exhaust silencers of standard design, with baffles and acoustic insulation of ducts and plates required for sound control shall be furnished.

The inlet and exhaust silencers shall be capable of reducing the noise level in a free field at a distance of 200 feet to the following:

Octave Band	1	2	3	4	5	6	7	8
Center-Line Frequency	63	125	250	500	1000	2000	4000	8000
Levels - Decibels	80	73	64	60	61	52	49	46

6:5.11 Cool Down System: A cool down system shall be furnished to provide even cooling of the rotor after shutdown and shall include a turbine shaft d-c motor and coupling device, together with a lubricating oil pump and automatic control equipment.

6:5.12 Accessory Drives: Mechanical means shall be provided for connecting of turbine auxiliaries to the turbine shaft, as may be required, including the following:

Starting engine.
Governor system.
Fuel pump.
Lubricating oil pump.
Cool-down shaft turning mechanism.

6:5.13 **Accessory Equipment Drive Motors:**

a. Type: Motors shall be squirrel cage induction type NEMA Standard. Motors shall be designed for full voltage and normal starting torque.

b. Enclosures:

1. Fuel oil pump motors shall be Class 1, Group D, totally enclosed explosion proof.

2. All other accessory motors shall have splashproof enclosure.

c. Sizes: All motors shall be sized so that they will not be overloaded when the connected item of equipment is operating at full capacity. In the case of pumps, motor shall not be overloaded at any place on the pump curve.

d. Current Characteristics:

1. Motors, smaller than 1/2 H.P. - 220 volts, 1 phase, 50 hertz.

2. Motors 1/2 H.P. and larger 220/380 volts, 3 phase, 50 hertz.

e. Insulation: Shall be NEMA class "B" or better and rated for operation in an ambient of 40°C.

6:6 GENERATOR AND ACCESSORIES

6:6.1 General: The Generator shall be of the cylindrical rotor, synchronous, self-ventilating, air-cooled, alternating current type complete with all required accessories. The Generator design shall be coordinated with that of the gas turbine and shall result in a completely compatible installation. Materials of construction shall be of a quality to assure reliable operation, low maintenance and long life. All equipment shall conform to the latest relevant approved standards as to features of materials, workmanship, design and tests. The generator and auxiliary equipment shall be in accordance with the latest ANSI and IEEE standards as applicable.

6:6.2 Generator Rating: The generator shall be 11,500 Volts, 3 phase, 50 hertz. The generator rating at .85 power factor with a short circuit ratio of .58 shall be at least equal to the peak load output of the gas turbine when operating at NEMA conditions over the ambient temperature range of 40°F to 105°F. The generator

shall be capable of withstanding, without damage, overspeeds that may be imposed by the prime mover. The unit will be subjected to substantial negative sequence currents. The bidder shall furnish the unbalanced current carrying capability of the generator proposed in percent of machine base ratings. A capability of at least 5% shall be provided. The generator and flywheel shall have sufficient flywheel effect to meet the requirements of regulation as set forth in other paragraphs.

6:6.3 Frame and Housing: Provision shall be made in the frame construction to prevent stator movement from causing undue vibration in the external frame and foundation. Suitable insulation shall be provided to prevent flow of shaft current. The busing shall be designed to prevent water from entering the rotor or stator windings.

6:6.4 Rotor: The rotor shall be machined from a solid forging and not require prewarming before it is brought up to rated speed or when overspeeding. The rotor retaining rings shall be protected from damage due to single-phase or unbalanced loads. The rotor windings shall be provided with Class B or better insulation. Insulation shall be special tropical type capable of withstanding the following: excessive moisture, high ambient temperature, corrosion, fungus, insects, vermin, etc.

6:6.5 Stator: The generator stator windings shall be provided with Class B or better insulation. Insulation shall be tropical type same as for the rotor. The stator windings shall be equipped with six (6) resistance-temperature detectors wired to terminal blocks. Two (2) temperature detectors shall be provided for air from air coolers.

6:6.6 Windings: Dielectric withstand and test shall be in accordance with requirements of ANSI C50.10-1965.

The impulse level of the insulation to ground of the windings shall be in accordance with ANSI C50.10-1965.

Field windings shall be designed to have temperature rise characteristics which take into account the mechanical movements of windings, with respect to slots and supports, to provide for satisfactory operation over long life. The design shall recognize frequent startup and shutdown and daily load cycling over its entire life. The design of the rotor and stator windings and supports shall take into account such mechanical movements during load changes.

6:6.7 **Collector Rings: Collector rings, if required, shall be enclosed and fan ventilated by air taken from the building.**

The brushes shall be readily accessible for ease or replacement without tools during operation. Where brushes are in pairs, removing one brush must not interfere with the circuit connection of the other brush. A suitable enclosure shall be provided around the collector rings along with a door for entrance, illumination and a window that allows observation from the outside.

The necessary bus shall be provided to extend the generator field connections to a suitable, conveniently located terminal block.

6:6.8 Bushings and Enclosures: Six terminal bushings shall be provided. They shall be at the exciter end and shall be arranged in two groups of three each. The group nearest the exciter or collector end shall be the line bushings. Each bushing with its terminal shall be designed for a continuous current output of the generator at maximum design air pressure. Withstand test voltage of the bushings when tested in air shall be in accordance with applicable standards.

The temperature rise of the terminal bushings shall meet the temperature rise of the generator stator winding and shall be suitable for connection to generator isolated phase bus duct having 105°C total temperature.

6:6.9 Current Transformers: A total of six bushing-type current transformers shall be furnished. They shall have an accuracy for relaying. Current transformers shall be rated to have a secondary current output of approximately 3.5 to 5 amperes at rated generator current. The bushing current transformers shall be installed on the neutral bushings of the generator.

Current transformer secondaries shall be brought out to a conveniently located common terminal board which shall be enclosed in a box.

6:6.10 Bearings: Bearings shall be of the split type and shall be pressure lubricated from the turbine oil system. Each bearing shall be provided with a suitable thermometer and provisions for the thermocouple in the oil drain and a suitable sight flow opening to observe bearing oil flow. The bearing shall be outside of the generator casing, permitting inspection without removing the generator end bell.

6:6.11 Exciter: Brushless, static or conventional type exciter is acceptable. The nominal output voltage shall be selected by the Bidder. If the exciter has a commutator, it shall meet the requirements stated in ANSI C50.5-1955. The exciter shall have Class B insulation or better. Insulation shall be tropical type same as generator. The ventilating system of the exciter shall be supplied with suitable filtered air for cooling through the load range at the operating temperatures specified.

The excitation system shall be capable of operating the generator at maximum rated KVA, rated power factor and rated frequency at 105% of rated voltage using only 75% of the total exciter and 75% of the total voltage regulator rectifiers. The Bidder shall supply all necessary excitation equipment. The exciter response rate shall not be less than 0.5 as defined in ANSI.

6:6.12 Voltage Regulator: The voltage regulator shall be of the static, solid-state continuous acting type capable of ± 1/2% voltage regulation from no load to full load at rated frequency. A voltage adjusting unit shall be mounted on the generator control panel.

The equipment shall be designed to allow replacement of voltage regulator drawout assemblies while the unit is in operation at rated output. A transfer scheme shall be provided for transferring from automatic AC voltage regulation to manual DC regulation. A transfer switch and necessary meters and controls shall be provided for mounting on the generator control panel to provide a smooth bumpless transfer from manual to automatic and from automatic to manual.

The voltage regulator shall be housed in a suitable enclosure for outdoor mounting; the rectifiers shall be air cooled.

6:6.13 Rheostat: An exciter field rheostat shall be furnished. The rheostat shall be suitable for mounting in the switchgear panel.

6:6.14 Field Discharge Resistor: A field discharge resistor shall be furnished for the generator, if required.

6:6.15 Strip Heaters: The generator shall be equipped with strip heaters automatically controlled for humidity protection under standby conditions.

6:6.16 **Mounting: The generator shall be equipped with the required foundation bolts and sole plates. The generator stator core shall be so flexibly mounted within the external housing that inherent 100 cycle vibrations transmitted to the foundations are minimized. Sufficient clearance shall be provided to permit movement of the stator for inspection purpose.**

6:7 INSTRUMENTATION, CONTROLS AND PROTECTION

6:7.1 General: The gas-turbine generator unit shall be provided with complete control and indicating systems for local operation, together with all protection and alarm systems necessary for safe and reliable operation. Provision shall also be made for remote control from an existing control room.

The manufacturer shall provide his standard control and protection package plus the remote control station. System shall be complete with all control switches, indicating meters, lights, auxiliary relays, thermocouples, pneumatic and/or electrical operators, signal converters, transmitters, receivers and all other devices necessary to safely operate and protect the gas-turbine generator and associated auxiliaries. Full details of standard controls offered shall be submitted with the proposal.

A three years supply of charts shall be furnished for all recording devices on the unit. All temperature indicating and recording devices shall give readings in degrees Centigrade. All pressure indicating devices shall give readings in the Metric system.

6:7.2 Control Panels:

a. Control panels shall include a turbine control panel, generator control panel, motor control panel and a remote control panel.

b. Each control panel shall be of the enclosed switchboard type with the front panel hinged to allow quick and easy access to the interior. Panels shall be made from specially smooth and leveled steel.

c. Terminal boards and wiring shall be provided, with the wiring installed in horizontal and vertical enclosed perforated wiring troughs.

d. Terminal boards and terminals shall be identified by letter, number and wire number respectively.

e. Each panel shall be provided with an internal lamp and with strip heaters.

f. Instruments, meters, control devices, and protective relays in general shall be mounted on the front of the panels. Name plates shall be provided for control device identification. All name plates shall be printed in both English and Indonesian. Due to a possible local dialect, the CONTRACTOR shall obtain Indonesian equivalents to English from the OWNER.

6:7.3 Turbine Controls:

a. General: The turbine control system shall provide complete indicating, regulating, controlling, and protecting functions necessary for the safe and efficient operation of the gas turbine. The Manufacturer shall provide his standard control equipment and full details shall be submitted with the proposal. As a minimum, the control equipment must perform the following functions:

1. Control the unit automatically and manually from the local control area.

2. Control the unit automatically from the remote control area.

3. Protect the gas turbine at any time during both manual and automatic operation against any malfunctions of the turbine and control system. "Fail-Safe" systems shall be employed wherever feasible.

4. Annunciate equipment malfunctions with three distinctive groups of alarms:

(a). Alarm only for off-normal conditions.

(b). Alarm, shutdown when the unit is unloaded, if necessary. Alarm and start standby equipment if available. The unit may be restarted after the correction of the cause of the alarm.

(c). Alarm and lock-out when the unit is tripped off the line and shutdown and cannot be restarted without previous inspection.

5. The gas turbine shall be capable of full load rejection and remain operating at rated speed and frequency at a load sufficient to carry the plant auxiliary load as required.

b. Control Equipment: The following equipment shall be included as a minimum:

1. Control panel.

2. Master control switch for starting and stopping the turbine.

3. Selector switch for "OFF", "SPIN", "RUN".

4. Capacity selector switch, "BASE", "PEAK".

5. Speed indicator for turbine and generator.

6. Base fired time meter.

7. Peak fired time meter.

8. Emergency loading counter.

9. Start counter.

10. Emergency synchronous pushbutton.

11. Emergency trip switch.

12. Governor speed changer motor control switch.

13. Temperature recorder for the following areas:

(a). Turbine exhaust

(b). Turbine wheelspaces

(c). Spare

14. Turning gear "Start"-"Stop" pushbutton.

15. Alarm bell, to be sounded only in case of fire.

16. Alarm horn, to be sounded for all troubles except fire.

17. Lockout relays, hand reset.

18. Vibration detector relay panel with indicator and recorder for each of the three vibration pick up points.

19. Auxiliary relays as required.

20. Relays and timers to provide the necessary functions for the control, sequence, and protection of the gas turbine, to include D-C timer relays for turbine warm-up, cool-down, shut-down automatic program.

21. Control and/or transfer switches for maintenance operation of the following apparatus and/or circuits.

    (a). Primary auxiliary lube oil pump motor control (hand-off-auto).

    (b). Secondary auxiliary lube oil pump motor control (hand-off-auto).

    (c). Ignition transformer circuit (hand-off-auto).

    (d). Clutch solenoid valve (hand-off-auto).

    (e) Overspeed solenoid valve (hand-off-auto).

    (f). Oil isolation solenoid valve (hand-off-auto).

    (g). Turning gear motor control (hand-off-auto).

22. **Indicating lights with colored lenses for the following:**

(a).	Turning gear "Off"	Green
(b).	Turning gear "On"	Red
(c).	Starting device operating	Red
(d).	Clutch pressure established	Amber
(e).	Overspeed trip reset	Red
(f).	Ignition "On"	Amber
(g).	Fuel "On"	Red
(h).	Ready to start auxiliaries	Amber
(i).	Ready to start	Amber
(j).	Master relay energized	Red
(k).	Ready to snychronize	Red
(l).	Emergency synchronization ready	Red

6:7.4 Generator Controls: The generator control system shall provide complete indicating, regulating, controlling, and protecting functions necessary for safe and efficient operation of the generator.

The following equipment shall be included as a minimum.

a. Control panel.
b. Incoming and outgoing cable termination.
c. Ammeter, auxiliary generator.
d. Ammeter switch for auxiliary generator ammeter.
e. Voltmeter, auxiliary generator.
f. Generator voltmeter of the recording type.
g. Voltmeter switch.
h. Generator triplex type ammeter.

i. Power factor meter.
j. Wattmeter of the recording type.
k. Varmeter of the recording type.
l. Watthour meter.
m. Var-hour meter.
n. Set of snychronizing equipment consisting of:

1. Voltmeters.
2. Frequency meter, tongue type.
3. Synchroscope.
4. Manual synchronizing lights.

o. Automatic synchronizer.
p. Manual-automatic synchronizing transfer switch.
q. Regulator control switch with indicating lights.
r. Manual synchronizing switch.
s. Regulator transfer switch.
t. Voltage adjusting rheostat control switch with indicating lights.
u. Base voltage adjusting rheostat control switch with indicating lights.
v. Field breaker control switch with indicating lights.
w. Generator breaker control switch with lights.
x. Lockout relay for use with regulator, with lights.
y. Lockout relays for use with generator differential and over-all differential relays.
z. Generator differential relay.
aa. Over-all differential relays.
bb. Loss of field relay.
cc. Voltage controlled overcurrent relays.
dd. Antimotoring relay.
ee. Negative sequence relay.
ff. VAR transducer.
gg. Watt transducer.
hh. Generator neutral ground relay, for use with transformer grounding.
ii. Power relay to supervise normal shutdown.
jj. Generator stator temperature relay.
kk. Auxiliary relays for snychronizing.
ll. Generator temperature measuring instruments, with temperature recorder.

mm. Exciter voltmeter (if required).

nn. Exciter ammeter (if required).

oo. Field switch and Field Discharge Resistor (if required).

6:7.5 Annunciator Section: A 45 point illuminated annunciator with test, acknowledge and reset pushbuttons and the following indication and alarms shall be furnished:

a. Motor control center undervoltage (A).
b. High or low lube oil level (A).
c. Hydraulic ratchet trouble (A).
d. Battery or DC Motor under voltage (A).
e. Turbine underspeed (A).
f. Line undervoltage circuit trouble (A).
g. Generator stator temperature high (A & T)
h. Auxiliary motor overload (A).
i. Power supply trouble (A).
j. Speed sensor trouble (A).
k. Low lube oil pressure or emergency lube pump running (A & T)
l. Speed circuit abnormal (A).
m. Fuel pump position servo trouble (A).
n. Control system ground (A).
o. Diesel fuel pressure low (A).
p. Exciter trouble (A).
q. Generator breaker tripped (A).
r. Starting device trouble (T).
s. Overspeed trip or trouble (T).
t. Lube oil header temperature high or low (A & T).
u. Incomplete sequence (A).
v. Exhaust temperature differential (A).
w. Generator air inlet filter excessive drop (A).
x. Generator field ground or bus ground (A).
y. Fire (T). (alarm bell).
z. Station emergency trip (T).
aa. Hydraulic trip circuit pressure low (T).
bb. Failure to fire or loss of flame or detector (T).
cc. Exhaust temperature trip or trouble (A & T).
dd. Vibration trip or trouble (A & T)

ee. Turbine air inlet trouble (A).

ff. Cool-down system operating but turbine shaft not turning (A).

gg. Generator or transformer differential (T).

hh. Spares, (remainder of points).

Note: The above items which are followed by (A) alarm only. Those followed by (T) are set to trip the unit automatically and simultaneously alarm. Those followed by (A & T) alarm at one level and trip at another level. The horn is to sound for all troubles except fire which is to be the only trouble to use the bell.

6:7.6 Remote Controls:

a. Control Functions: As a minimum, the remote control system shall perform the following functions:

1. Start of the unit: This operation shall bring the unit automatically through all the stages of start up except to synchronize the generator with the system. A signal shall be provided to alert the operator in the Remote Control Room that the unit is ready to be synchronized.

   The operator will initiate the automatic synchronizing equipment by controls in the Remote Control Room.

2. Stop the unit: The generator shall be automatically unloaded, tripped off the line and the turbine shutdown, ready for restarting.

3. Active load control: Active load raise and lower control shall be connected to the governor speed and load adjustment motor.

4. Reactive load control: Reactive load raise and lower control shall be connected to the generator voltage adjusting rheostate, part of the automatic voltage regulation system.

b. Control Panel and Equipment: The control panel located remote, approximately 160 meters from the generating units shall be direct wire connected to the control system at the turbine generators. The equipment shall be designed for operation on 110 volts D-C. The following equipment shall be included as a minimum:

1. **Watthour meter.**
2. **Wattmeter with adjusting resistor.**
3. **Varmeter with adjusting resistor.**
4. **Voltmeter.**
5. **Voltmeter switch.**
6. Frequency meter.
7. Master start-stop switch.
8. Capacity selector switch, base-peak.
9. Governor speed changer control switch.
10. Voltage adjusting rheostat control switch.
11. "Start" pushbutton for the auxiliary diesel generator.
12. Alarm acknowledge pushbutton.
13. Emergency synchronizing pushbutton.
14. Emergency trip switch.
15. Indicating lights for the following functions:

    (a). Ready-to-start.
    (b). Ready-to-synchronize.
    (c). Annunciator alarm light.
    (d). Low battery voltage.
    (e). Complete sequence.
    (f). Master relay energized.
    (g). Master relay de-energized.
    (h). Normal shutdown in progress.
    (i). Loss 220/380 volt supply.
    (j). Aux. diesel running.
    (k). Emergency start sync.
    (l). Generator breaker closed.
    (m). Generator breaker tripped.
    (n). Flame indicating lights.
    (o). Sequence in progress.

16. Alarm bell - to be sounded only in case of fire.
17. Alarm horn - to be sounded for all troubles except fire.
18. Isolating switch

Note: The remote control panel shall be approximately 21 inches wide and 89 inches high to match the existing gas-turbine remote panel.

6:8 ELECTRICAL EQUIPMENT

6:8.1 Metal Clad Switchgear:

a. General Requirements: Switchgear shall be of the outdoor metal-clad single bus, radial feeder type and shall conform to the following NEMA Standards Publications: High Voltage Fuses, Publication No. SG-2, Power Circuit Breakers, Publication No. SG-4, Power Switchgear Assemblies, Publication No. SG-5, Power Switching Equipment, Publication No. SG-6 and Applicable Portions of ANSI Standard C37. Terminal marking shall be in accordance with the ANSI Standard for Terminal Marking for Electrical Apparatus, Publication No. C6.1 Switchgear shall be suitable for use on a 11,500 volt, three-phase, three-wire, 50 hertz system.

b. Stationary Structures: Unit type construction shall be used for the switchgear housing to provide a rigid self-supporting and self-contained general-purpose, ventilated enclosure for each switchgear unit. Each stationary structure shall be constructed of 1/8 inch thick, formed, stretcher-leveled steel sheets and structural members electrically welded. The circuit breaker unit, buses, instrument transformers and outgoing cables, if any, shall be isolated within separate compartments formed by sheet steel barriers. Bus supports shall completely cover all bus openings, to provide a non-combustible fire wall between units. Each compartment shall have a separate cover for individual servicing without exposing circuits in adjacent compartments. Compartments housing circuit breakers shall be fitted with positioning devices for the insertion or removal of the circuit breakers.

The mechanism shall provide correct alignment of the breaker studs with the stationary contacts. Compartment housing potential transformers shall be fitted with drawout carriage and shall consist of suitable frame members, rollers and guides to form a sturdy, easily movable support for the potential transformers. Each carriage shall be fitted with movable primary and secondary contacts that align with fixed contacts in the stationary section housing. The high voltage terminals of the transformer shall be automatically grounded and disconnected from the high voltage source by the movable primary contacts when the carriage is in the

"disconnected" position. The stationary structure and circuit breaker units shall be constructed so that each unit is interchangeable with every other unit of similar rating. Each unit shall be provided with strip heaters permanently wired to the auxiliary power source through fuses, to retard condensation. The front door panel shall be hinged. Rear access shall be accomplished by removable panels or doors to reach the bus or cable compartments.

c. Buses and Connections: Buses shall be made of aluminum or copper. Buses shall have a minimum continuous carrying capacity of 2000 amperes. The contact surface at each main bus joint and each top joint shall be silver plated, formed and bolted to obtain a high pressure silver-to-silver contact to assure maximum conductivity. The bus shall be completely insulated and shall be mounted on insulating supports to provide the strength to withstand magnetic stresses equal to the power circuit breaker momentary interrupting ratings.

Barriers shall be arranged to insulate the bus compartment of each unit. Insulation shall be flame retardant, molded-type with either molded insulation covers or compound filled boxes and varnished cambric tape for bus joints. A ground bus shall extend the full length of the stationary structure. It shall have a momentary rating at least equal to the highest momentary rating of any circuit breaker in the structure assembly. Each stationary unit shall be grounded directly to the ground bus. The frame of each circuit breaker unit shall be grounded through heavy finger-type contacts at all times except when the breaker primary disconnecting devices are separated a safe distance.

d. Instrument Transformers: Instrument transformers shall be of the ratings and ratios described in various sections of these specifications. They shall be indoor dry type designed and constructed to conform to ANSI Standards for Instrument Transformers, Publication No. C57.13. Mechanical and thermal ratings shall be coordinated with circuit breakers and other apparatus in the switchgear in accordance with NEMA Standards for Power Switchgear Assemblies, Publication No. SG5. Potential transformers shall be mounted on drawout carriages with primary and secondary disconnecting devices and shall be furnished with primary circuit

current-limiting fuses. Ratio and phase angle tests shall be made and certified test reports provided for all current and potential transformers. Tests shall be made for burdens that will normally be connected to the transformers including the burden of the portable test instruments to be used for generating unit acceptance tests.

e. Generator Power Circuit Breakers: Generator power circuit breakers shall be three-pole, single-throw, air break type, electrically operated, electrically and mechanically trip free, complete with stored energy operating closing mechanism and D.C. tripping, with auxiliary switches as required for control and interlocking, mounted on a mobile drawout frame. Breakers shall be suitable for operation from a 125 volt d-c control power source. Breakers shall be designed and equipment shall be furnished to permit the complete disconnection of the breaker from the bus for the testing of the breaker within the switchgear compartment. Breakers shall be mechanically interlocked and shall be in conformance with applicable NEMA and ANSI standards for Power Circuit Breakers. Breakers shall have a continuous current rating equal to 125% of generator capacity and shall be capable of interrupting its rated KVA in eight cycles or less (60 hertz) from the time the trip coil is energized until the arc is extinguished. Nominal three phase interrupting rating shall be 750 MVA at nominal voltage of 11.5 KV.

f. Interlocks: Generator main breakers shall be interlocked with the turbine starting mechanism to prevent closure of the main breaker unless the turbine is running. Trip contacts will be provided on the turbine shutdown devices and shall be connected to trip the generator main breaker when the turbine is shut down due to over-speed or lubricating oil pressure failure. Switchgear wiring and terminal blocks shall be provided to facilitate the connection of above mentioned protection devices. Mechanical interlocks shall be provided as indicated in the NEMA Standards for Power Switchgear Assemblies, Publication No. SG5.

g. Accessories: Routine maintenance tools shall be provided and shall include manual positioning devices, maintenance closing lever and handling truck for removing breaker (if necessary).

h. Finish: All metal surfaces forming a part of the completed switchgear shall be cleaned, treated and painted with a rust-resisting primer coat to provide a bond between the paint and the metal surface to prevent the entrance of moisture and the formation of rust under the paint film.

i. Miscellaneous Requirements: The equipment shall be treated to resist fungus and moisture as specified below:

1. Electrical components such as switches, fuses, contacts, heater elements, etc. shall not be treated. Other materials and components which are inherently fungus resistant or are protected by hermetic sealing need not be treated.

2. Circuit elements, not covered above and which have a temperature rise of not more than 75°F, when operating at full load, shall be coated with a fungus-resistant varnish. Such circuit elements include, but are not limited to: cable, wire, switchboards, terminal and junction blocks, junction boxes, capacitors and coils.

j. Factory Tests: The manufacturer shall assemble and perform commercial shop tests on the equipment in accordance withthe applicable standards of the American National Standards Institute and the National Electrical Manufacturers Association prior to shipment.

6:8.2 Non-Segregated Phase Bus:

a. General: The (11.5 kV) bus duct shall be of the non-segregated phase bus type in a common metal enclosure without barriers between phases.

The non-segregated phase bus shall be furnished complete with supporting steel, seal-off bushings, wall frames, termination and all other accessory items necessary for a complete installation.

The non-segregated phase bus shall begin at the generator terminals thru the main bus of metal clad switchgear then connect to the main step-up transformer low voltage terminals. Bus duct shall be approx 30 feet long. Precise dimension to be finalized after contract award.

b. Electrical Characteristics: The non-segregated phase bus duct shall have the following ratings:

1. Design Voltage: 15 kV
2. Operating Voltage: 11.5 kV
3. Continuous Ampere Rating: 2000 Amps.

c. Enclosures: The enclosures shall be fabricated from steel and shall be rectangular in form. Indoor construction shall be dust-tight and outdoor construction shall be weather-tight. Fixed covers shall be welded. Removable covers shall be bolted and gasketed.

d. Conductor: The conductor shall be supported in the housing by a series of common preformed micarta tube insulator supports set at appropriate intervals along the length of the bus. The conductor shall be mounted on track resistant, flame retardant, glass polyester supports.

The spacing of the bus support insulators shall be in line with the short circuit rating of the bus.

e. Joints: Joints shall be insulated by insulating boots. The bus shall be supplied with expansion joints if needed. All bolted conductor joints shall have silver contact supports.

f. Connectors: Braided connectors shall be furnished for connection to equipment. Connections at these points shall be made bolted with high strength bolts.

6:8.3 Equipment Cubicles:

a. Surge protection cubicles shall be provided to maintain the integrity of the system. The surge protection shall consist of three (3) 12 kV station type lightning arrestors and three (3) 0.25 microfarads surge protection capacitors.

b. Generator Neutral Grounding Cubicle shall contain one (1) 15 KVA self-cooled single phase 50 hertz indoor non-inflammable liquid filled transformer HV 12 KV; LV 240 volts, and one (1) grounding resistor, grid type, for use in the secondary of this distribution transformer. A 600 Amp., single pole disconnect switch shall be provided for disconnecting the transformer and ground from the generators.

6:8.4 Relays, Instruments and Meters, Control Switches, etc.

a. Relays: Protective relays shall be semi-flush drawout type with rear connecting terminals and built-in test facilities. They shall conform to ANSI Standards No. C37.1.

b. Meters and Instruments: Watthour meters shall be switchboard type semi-flush, drawout type with rear connecting terminals and built-in test facilities and shall have 5 digit cyclometer registers. Watthour meters shall comply with ANSI Standard for Electricity Meters No. C12. Indicating instruments shall be semi-flush mounted rectangular, switchboard type, with rear connecting terminals and with 250° scales in conformance with ANSI Standard for Electrical Indicating Instruments No. C39.1.

c. Instrument and Control Switches: All instrument and control switches shall be of the rotary enclosed rear mounting type. Control switch handles shall be of distinctive shapes to distinguish switch functions.

Each switch shall be provided with a nameplate. Voltmeter and synchronizing switches shall be provided with removable keyed handles.

d. Alarms: The switchgear shall be provided with alarm contacts and circuits for indicating the automatic operation or indication of various devices or events.

6:8.5 Wiring: All switchgear secondary and control wiring shall be made with solid or stranded tinned copper wire flame-resisting varnished cambric or thermoplastic insulated switchboard wire complying with NEMA Standards for Power Switchgear Assemblies, Publication No. SG5. All wiring shall be neatly and compactly arranged in accordance with first class standards of workmanship for apparatus of this type. All terminals, auxiliary resistors and devices, wiring troughs and miscellaneous materials necessary for complete installation shall be provided. Switchboard wire and cable shall be type AVB or type TA and shall conform to the ASA cable Standard for Asbestos, Asbestos-Varnished Cloth and Asbestos-Thermoplastic Insulated Wire and Cables, Publication No. C8.36.

6:8.6 Station Battery and Battery Charger: A control battery and charger equipment for separate mounting rated 125 volts, and suitable amperes for operating the switchgear and emergency equipment shall be furnished. The battery shall furnish sufficient energy to care for any equipment necessary to protect the unit following a shutdown of the plant and loss of A.C. power for a period of not less than 3 hours. The equipment shall consist of:

1 Heavy Duty Control Battery, Nickel-cadmium Type, with standard accessories and rack.

l Automatic Silicon Controlled Rectifer battery charger, for Float and Equalizing Charge, complete with indicating instruments A.C. and D.C. Breakers, Rheostats, etc.

6:8.7 Motor Control Centers:

a. General Requirements: Motor control centers shall be designed in accordance with NEMA Standards.

1. The Motor Control Centers shall consist of vertical sections, of standard width and shallow depth, joined together to form rigid, free-standing, completely dead front, enclosed control assemblies. Each assembly shall be arranged for all control and power cables to enter from bottom or top. The control centers shall be NEMA Class 1 Type B construction with all motor and control leads brought out to terminal boards in each control compartment. All units will be readily interchangeable with similar units occupying the same space units. Each section shall be dead front; and rear access shall not be necessary for connection; however, rear plates shall be removable. Pan type doors with gasket shall be used for all units and future spaces. Doors shall be hinged to the structure with a concealed hinge. Each section shall have removable plates for access to the horizontal feeder bus and for conduit entry.

2. Each vertical section shall have a horizontal wiring trough at the top and bottom and a vertical wiring trough with cable supports in front and back providing convenient access for incoming control and power leads and interpanel wiring.

3. A continuous horizontal bus shall provide power distribution to each vertical and three-phase vertical riser bus, arranged for stab connection of the individual starter units in each vertical section.

4. Bus supports and stab connector supports shall be formed of high dielectric strength, low moisture absorbtion molded compound with high impact strength and a high creepage surface. Stab-on connectors shall be silver-plated, self-aligning and backed up with steel springs.

5. All busing shall be secured and braced to withstand thermal and mechanical stresses incidental to short circuit current.

6. All compartments designated as "Spare" shall be completely wired and assembled ready for use including terminal blocks.

7. All compartments designated as "Spare" shall be provided with all necessary accessories for the addition of a starter unit. Compartments shall be provided with hinged doors.

8. All compartments designated as "Blank" shall be unused space.

9. Ventilating louvers shall be provided, if required, for satisfactory heat dissipation in each vertical section. The Motor Control Centers shall be designed to provide satisfactory operation in an ambient temperature of at least 40°C.

b. Electrical Characteristics:

1. Operating Voltage - 220/380 volts, 3 phase, 50 hertz.

2. Control Voltage - 220 volts, 1 phase, 50 hertz.

3. Construction - NEMA Class 1, Type B.

4. Motor Starters: Combination full-voltage magnetic type. Three (3) overload relays, with heater elements, shall be furnished with all motor starters. One normally closed and two normally open auxiliary contacts in addition to the standard sealing-in contact shall also be furnished with all motor starters. Starter coils shall be rated 220 volts. Starters shall have NEMA Class 1, Type B wiring and shall contain a wiring diagram mounted in each starter.

5. Circuit Breakers: Shall be manually operated, trip-free from the handle and provided with inverse-time, thermal element over-load protection for motors and instantaneous magnetic short-circuit protection for branch feeders on all poles. Operating handles shall clearly indicate whether the breaker is "On", "Off", or "Tripped". Means shall be provided to lock each circuit breaker in the "Off" position with the cover closed by means of padlocks.

6. Unit Control Elements, Indicating Lights, Push-Buttons, and Selector Switches, if required, shall be mounted with starter units on a hinged plate in the unit itself and withdrawn with the unit without the removal of any wiring elements.

7. Motor Leads and Feeder Terminals: Terminal blocks shall be of approved type with terminal points of adequate capacity for the load involved.

8. Control Wiring Terminal Blocks: Terminal blocks for control wiring shall be of the molded or fabricated type having insulating barriers between poles. Each terminal block shall be provided with a marking strip properly identifying each terminal point as indicated on the typical starter wiring diagrams.

9. Ground Bus: Shall be made of 1/4" by 2" copper bar and run at the bottom for the full length of each control center.

10. Finish: All painted steel work shall be treated with a rust inhibiting primer coat and two finish coats, or bondarized and finished with two coats of medium gray baked enamel.

6:8.8 Lightning Arresters:

a. General Requirements: Lightning Arresters shall be furnished and installed for each phase of the high voltage side of the power transformers. These arresters shall be mounted on brackets attached to the transformer tank.

Arresters shall be rated 72 kV and shall be self supporting, station type, for outdoor service, in tropical climate, at an altitude below 1000 meters. Clamp type line and ground terminals, caps, bases and mounting hardware shall be furnished for complete installation.

b. Standards: Construction, performance and tests shall conform in all respects to NEMA Publication LA-1 and ANSI Standard C62.1 for this class and voltage of arresters.

6:8.9 Power Transformers:

a. General Requirements: To tie the gas turbine unit to the existing system, two outdoor station type power transformers, one for each gas turbine unit, shall be furnished and installed.

b. **Standards: Construction, performance, and tests shall conform in all respects to ANSI Standard C57.12 and NEMA Publication TR-1 applicable to this class and voltage transformer.**

c. Rating: Three phase, oil filled, OA/FA cooled 50 hertz, high voltage 70,000 volts, low voltage 11,500 volts, KVA rating to be compatible with rating of generator for continuous full load operation.

d. High Voltage Winding: Rated voltage 70,000 volts, WYE, grounded through a Peterson coil, with 4 full-capacity taps, 2-2½% above and 2-2½% below normal. Tap changer for de-energized gang operation of all phases with an operating handle on the outside of the tank shall be furnished. BIL shall be 350 kV.

e. Low Voltage Winding: Rated voltage 11,500 Delta. BIL shall be 110 kV.

f. Bushings: High voltage line and neutral bushings of the 69 kV class, shall be provided. High voltage line bushings shall be compatible with full load voltage and current ratings of the transformer specified above.

Low voltage line bushings shall be 15 kV class with current ratings to match the transformer capacity. Low voltage line bushings will be located on the transformer sidewall for enclosure in a housing for connection to metal-enclosed nonsegregated phase bus from the generator metal-clad switchgear.

All 15 kV class bushings shall be porcelain bulk type, through-conductor construction. All HV bushings shall be oil filled, draw-lead connection, supplied with oil level indication and provision for power factor test. Bushings shall meet the requirements of ANSI Standard C76.1. Bushings shall be furnished with suitable solderless adjustable clamp type terminals or connectors.

g. Impedance: Impedance shall be 7.0% at rated voltage and rated KVA capacity at 55°C. Tolerance of plus or minus 7½% of the above value will be allowed, according to ANSI Standards.

h. Cooling: Transformers shall be designed for continuous self-cooled/fan cooled operation.

Winding temperature rise by resistance method shall not exceed 55°C, and hottest-spot winding temperature rise shall not exceed 65°C above an ambient of 40°C. Furnish complete with single phase 220 volt low velocity fans, actuated from top oil temperature relay.

Detachable radiators with individual shut-off valves shall be furnished. Each radiator shall be supplied with accessible drain and vent.

i. Oil Preservation: Sealed tank construction shall be used with welded connections where appropriate. Cover and hand holes shall be bolted connections.

j. Lightning Arrester Mounting Brackets: Welded steel brackets for supporting lightning arresters shall be mounted on the transformer near the high tension bushings.

k. Accessories and Standard Features: The transformers shall be furnished complete with accessories and standard features provided for in accordance with applicable ANSI standards and NEMA publications. Principal items are:

1. Magnetic Liquid-Level Gage, with alarm contacts.
2. Dial Type Oil Thermometer, with alarm contacts.
3. Drain Valve.
4. Oil Sampling Cock.
5. Upper and Lower [illegible]r Valves.
6. Lifting eyes for tank cover.
7. Lifting lugs for lifting complete transformer.
8. Facilities for lifting core and coil assembly from tank.
9. Base designed for rolling or skidding in any direction, with provisions for pulling in direction of transformer center lines.
10. Jacking facilities at four corners of the base.
11. Two (2) ground pads with adjustable clamp type terminals.
12. Cover mounted mechanical pressure relief device with automatic resealing-resetting operation, mechanical indication with alarm contacts of devices operation shall be provided.
13. Two Diagrammatic Nameplates - one in English and one in Indonesian.
14. Fault Pressure Relay.

Alarm contacts on the gages etc. shall be connected to the generator unit annunciator to indicate abnormal conditions.

l. Oil: Required amount of transformer oil for complete fillings of the units shall be furnished. Oil shall be General Electric Co. "10C", Westinghouse Electric Corporation "WEMCO C" or equivalent.

m. Tests: The transformers shall be tested at the supplier's factory. The following tests shall be made, as a minimum, in accordance with ANSI Standard C57.12.90:

1. Resistance Measurements of all windings on rated voltage connection and tap extremes.

2. Ratio Test at rated voltages and all tap connections.

3. Polarity and Phase Rotation Tests on rated voltage connections.

4. No Load Loss at rated voltage connections.

5. Exciting current at rated voltages.

6. Impedance and load loss at rated current on rated voltage connections and on tap extremes.

7. Applied Potential Test.

8. Induced Potential Test.

9. Leakage Test on assembled transformers by filling with liquid and pressure testing for at least eight (8) hours at maximum operating pressure.

10. Temperature Test. If transformers of duplicate or essentially duplicate design have been tested according to ANSI C57.12.90 then temperature test on this unit need not be performed. However, certified temperature test records of the tested similar unit shall be submitted.

11. Eight (8) copies of certified test reports of transformers shall be furnished.

6:8.10 Power Circuit Breakers - Outdoor Type.

a. General Requirements: For connecting the high tension side of the generator transformer to the system, two (2) outdoor power circuit breakers with steel structures shall be furnished and installed in OWNER's existing substation.

b. Standards: Construction, performance and tests shall conform in all respects to ANSI Standards C37 and NEMA Publication No. SG-4 applicable to this class and voltage power circuit breaker.

c. Type and Rating: The power circuit breakers shall be full oil type, frame mounted, three pole, single tank, single throw, D.C. trip, with pneumatic closing mechanism.

1. Rated Frequency - 50 hertz.
2. Max. kV, RMS - ~~72.5~~ 70 kV. BIL 350 KV.
3. Continuous Current, RMS - 1200 Amps.
4. Nominal Interrupting Capacity, 3 phase - 2500 MVA.
5. Interrupting Time - 1/12 second or less.

d. Construction and Accessories: The operating mechanism shall be electrically and mechanically trip-free.

Breakers shall be provided with all necessary mechanisms, fittings, auxiliaries with electrical and mechanical connections for satisfactory remote and local operation of the unit. Control circuits, auxiliary switches etc. shall be wired in accordance with the standard AEIC diagram for automatic power circuit breakers.

Breakers shall be furnished with standard accessories which shall include but not be limited to: 69 kV Class oil filled bushings with clamp type terminals, oil gage and power factor tap; Float type oil level gage for each tank; Fill pipe and cap for each tank; Drain valve for each tank; Gas vent for each tank; Multi-ratio Bushing Type Current Transformers (6), relay accuracy, with all leads connected to short-circuiting type terminals in mechanism housing attached to the breaker frame: Space heater (220 volt

A-c) for mechanism housing; AB circuit breaker for 220 volt A-C single phase control power; AB circuit breaker for 220 volt A-C heater circuit; Mechanical-type operation counter; External Manual-Trip Device, Hand Reset; Position-Indicating Target; Provision for travel recorder; Complete Filling of oil, General Electric "10-C" or Westinghouse Electric Corporation "Wemco C" or approved equal; Manual Tank Lifter; Manual Closing Device; Nameplate, CT. connection diagrams in mechanism housing etc.

e. Control Voltages: Control Voltages, will be 125 volt D-C, and 220 volt, 50 hertz, Single Phase.

f. Tests: Production Tests including: leakage test on tanks, dielectric tests on wiring, timing, operational checks, ratio and polarity checks of current transformers shall be made, certified type or design tests made on same size and type of breaker shall be furnished. These shall include: interrupting capacity and momentary short circuit carrying capacity test, temperature rise and contact resistance measurement, impulse voltage test.

All tests shall be certified and furnished in eight (8) copies.

6:8.11 Air Break Switches, 69 kV.

a. General Requirements: For connecting the high tension side of the generator transformers to the system, four (4) 3-pole airbreak gang operated switches with steel structures shall be furnished and installed in OWNER's existing substation.

b. Standards: Construction, performance and tests shall conform in all respects to NEMA Standards Publication SG6 and applicable parts of ANSI C37 series.

c. Type and Rating: Switches shall be outdoor type, triple pole, single throw, manual gang operated, three-pillar, vertical break, horizontally mounted on steel structures.

1.	Rated Voltage	69 kV
2.	Rated Current:	
	Continuous Rating	1200 Amp.
	Momentary Rating	61000 Amp.
3.	Insulation Level (BIL)	350 kV

d. Construction and Accessories: Switches will be mounted on steel structures. Each pillar of the switch shall consist of cap and pin NEMA Standard Insulators Technical Reference No. TR16. Universal clamp type terminals shall be supplied with every pole of the switch suitable for connecting bare stranded copper or aluminum cables of various sizes between 2/0 AWG copper and 477 MCM ACSR inclusive. Switches shall be furnished complete with interphase connecting rods, vertical operating rod, bearings, lockable operating handle, intermediate guide bearing, and splices.

Phase spacing, between centers, shall be 7 feet. Mounting height, base of switch to ground line will be 12 feet. Each pole of the switch shall be furnished with arcing horns.

e. Test: Usual production tests shall be performed on each switch at the manufacturer's plant. In addition, Contractor shall furnish certified test reports in eight (8) copies on switches of like design that have been tested in accordance with NEMA Standard Publication No. SG-6, with the exception of ice tests.

6:8.12 Grounding System:

a. A low resistance grounding system shall be installed for both units in the plant area and tied to the existing ground system adjacent to the new unit.

b. Materials:

1. All ground cables shall be annealed, bare copper cable, concentrically stranded in accordance with ASTM designation B-8, class B.

2. Grounds rods shall be copper-covered, (Copperweld or equivalent) not less than ¾ inch in diameter, 10 feet long.

3. Cable Fittings, Lugs and Connecters shall be of the solderless type and shall have current-carrying capacity equal to that of the copper cable with which they are used. Fittings shall conform to NEMA Standard Publication SG-1 and shall be of Copper alloy, containing not more than 4 percent zinc. "Cadweld" or equivalent process may be used in lieu of fittings, lugs, and connectors.

c. **Installation:**

1. Ground mat shall be installed a minimum depth of 50 centimeters below the established elevation of subgrade.

2. Ground rods shall be driven vertically the full length of the rod until the top of the rod is at least 40 centimeters below the established elevation of subgrade.

3. A ground mat shall be installed not less than 12 by 12 meters with cross connections every 3 meters.

   At each corner of the mat and at each cable intersection a ground rod shall be driven and connected. A minimum of 350 MCM cable shall be used for the mat. When the mat is fully connected, but with no connections to equipment, the measured resistance shall be not more than one half (0.5) ohm.

4. All electrical equipment frames, steel columns, housings, transformers, breakers, switchgear ground buses, transformer and generator neutrals shall be connected to the ground mat. Where several pieces of equipment are to be connected, a ring ground bus shall be installed and connected to the ground mat with at least two ground cables from different points on the ring ground bus. Ring ground bus and connections to the ground mat shall be installed with 350 MCM cable as a minimum. Connections from the ring ground bus or the main grounding system to equipment shall be made with 2/0 AWG cable as a minimum, except that connections to individual low voltage motor frames may be made with #4 AWG cable as a minimum.

5. Lightning arresters shall be grounded to a ground field by # 2/0 AWG cable as a minimum. This ground field shall consist of at least six ground rods spaced not less than 2 meters apart, and shall be placed directly beneath or adjacent to each set of arresters. This ground field shall be inter-connected with the ground mat and ground ring bus.

6. Grounding system as installed shall be connected to the existing grounding system of adjacent units by 350 MCM cable, as a minimum, at two or more different points.

6:10.2 Fire Protection System: A complete carbon dioxide type fire protection system shall be provided with the unit. This system shall provide protection for the generator and accessory compartments and the turbine and accessory compartments and shall include all necessary gas bottles, piping nozzles, detectors, automatic trips and alarms and devices necessary for checking the condition of the system.

6:10.3 Lighting: A 220 volt, as far as practicable, lighting system shall be furnished and shall provide all necessary lighting in each compartment, including intake chamber and switchgear, and external to the unit for general purposes. In addition, ample lighting shall be provided at each operating or inspection point such as control panels and pressure and temperature instruments. Convenient switching for lighting control shall be included. Light and power outlets shall be provided at convenient points for portable lamps and tools to facilitate maintenance.

Adequate emergency lighting shall be provided in the principal compartments, with automatic connection to battery source.

6:10.4 Station Control Air System: A compressed air system shall be furnished as required for controls and instrumentation. This shall include a normal supply from the turbine air compressor and a standby motor driven compressor, receiver, filter, drier, and instrumentation and controls for regulation, indication and alarm.

6:10.5 Spare Parts: A set of spare parts shall be recommended for the gas-turbine plant. These spare parts shall include all items which the manufacturer deems necessary for the gas-turbine plants and accessories provided. Spare parts recommended shall be those expected to be required for 15,000 hours of operation of each gas-turbine unit.

6:10.6 Tools: One set of maintenance tools and equipment shall be furnished as follows:

a. Special wrenches and tools as required for assembly or dis-assembly.

b. Gauges and fixtures as required for alignment, angularity and concentricity measurements during assembly.

c. Lifting brackets, beams, jacks and tackles required for dismantling of housings, rotors and other principal parts.

d. Storage racks and boxes for the above.

e. Any other special tools needed for erection, repair, minor overhaul and maintenance of the unit and accessories shall be furnished. A list of tools to be furnished for this project shall be furnished with the proposal.

6:11 SPECIFIC GAS TURBINE-GENERATOR UNIT INFORMATION TO BE INCLUDED WITH PROPOSAL

6:11.1 System Descriptive Information: Furnish complete description and schematic diagram, when applicable, of the following systems:

a. Fuel oil system
b. Starting system
c. Control system
d. Lubricating oil system
e. Silencing system
f. Fire protection system
g. Air filtration system
h. Cooling system

6:11.2 Description of main components with details of construction and principal features:

a. Power turbine
b. Gas generator
c. Starting engine
d. Speed reduction gearing, if furnished
e. Automatic clutch for starting engine
f. Electric generator
g. Controls
h. Generator reactor, if furnished
i. Intake filter and silencer
j. Exhaust duct and silencer
k. Intake and exhaust air dampers
l. Systems of lubrication and of cooling

6:11.3 Performance curves giving:

a. Variation of power output with ambient temperature.
b. Variation of efficiency with ambient temperature.
c. Variation of efficiency with power output.
d. Reactive capability of generator (MVAR vs. MW).
e. Variation of power output with pressure drop through intake and exhaust.

6:11.4 Performance Details:

a. **Performance of the unit shall be stated for:**

International conditions of 59°F ambient temp. and 14.7 psia pressure, using the HHV of fuel oil.

	Output of Generator	Approximate Gas Temperature at Turbine	
	KW	Entry	Exhaust
Peaking Service			
Base Load Service			

Peaking Service Net Output		Heat Rate	Thermal Efficiency
100%_____	KW	_____ BTU/KWH	_____ %
75%_____	KW	_____ BTU/KWH	_____ %
50%_____	KW	_____ BTU/KWH	_____ %

Base Load Service Net Output			
100%_____	KW	_____ BTU/KWH	_____ %
75%_____	KW	_____ BTU/KWH	_____ %
50%_____	KW	_____ BTU/KWH	_____ %

b. Operating Data:

Temperatures at entry of high pressure gas generator turbine, and of power turbine _____

Compressor inlet air flow (weight and volume) _____

Power turbine speed _____

Gas generator turbine speed at rated peak output and at partial loads _____

Electric generator efficiency at rated output		_____
Reduction gear efficiency at rated output		_____
Estimated operating hours between overhauls of gas generator at peaking and base ratings	Hours	_____
	Starts	_____

c. Startup Times:

Synchronous speed, minutes	_____
Loading rate, % KW per minute	_____
Total time to peak load, minutes	_____

6:11.5 Technical Particulars. - Main Gas Turbine Unit:

a. Gas Generator

Number	_____
Manufacturer	_____
Type	_____
Starting system	_____
Number of stages: compressor	_____
Number of stages: turbine	_____
Number of combustion chambers	_____
Compressor shaft material	_____
Compressor disc material	_____
Compressor rotor blade material	_____
Compressor stator blade material	_____
Turbine shaft material	

Turbine disc material _____

Turbine rotor blade material _____

Turbine stator blade material _____

Combustion chamber shell material _____

Combustion chamber liner material _____

Full load speed _____

Critical speed _____

b. Power Turbine

Manufacturer _____

Type _____

Number of stages _____

Full load speed _____

Critical speed _____

Turbine shaft material _____

Turbine disc material _____

Rotor blade material _____

Stator blade material _____

Inlet duct material _____

Diffuser material _____

c. **Speed Reduction Gear**

Type _____

Speed ratio _____

d. **Generator**

Make _____

Type _____

Rating: _____ Volts, 3 phase, 50 Hz. _____ power factor

_____ KW maximum continuous rating

Speed: _____ R.P.M.

Standards to which manufactured _____

Insulation: Class__ ,Rated temperature rise _____

Method of cooling _____

Generator Reactances, based on _____ KVA

Synchronous _____ %

Transient _____ %

Subtransient _____ %

External Reactor (if supplied) _____ %

Short circuit ratio _____ %

e. Excitation System

Main field circuit:

Circuit breaker type, if furnished _____

Methodof field current control _____

Exciter: **Type**_____

Rating__ **KW** ____ **volts**___ **RPM**

f. **Generator Reactor (if furnished)**

Type: _____

Rating:____ **amp.**___ **KV**____ **ohm per phase**

Where mounted: _____

6:11.6 Technical Particulars - Gas Turbine Accessory Equipment:

a. Oil Cooler

Make _____

Number _____

Type _____

b. Lubricating Oil System

Lubricating oil tank capacity _____

Maximum temperature of oil leaving the bearings _____

Main pump:

Type _____

Driven by _____

Capacity _____

Auxiliary oil pumps:	A.C.	D.C.
Type	_____	_____
Speed	_____	_____

Capacity _____ _____

Driving motor size _____ _____

c. **Air Filters**

Make _____

Type _____

Number _____

Pressure Loss _____

d. Intake Silencers

Make _____

Type _____

e. Exhaust Silencers

Make _____

Type _____

6:11.7 Component Weights and Dimensions - Gas Turbine

	Weight	Length	Width	Height
Power Turbine and Gas Generator package (total)				
Casing assembly				
Rotor assembly				
Underbase				
Gas generator unit				

Generator package (total)

Stator

Rotor

Control package (total)

Intake Filter & Silencer

Exhaust Stack assembly

Other packages (list)

Maximum Lift for Installation

Maximum Lift for Maintenance

6:12 TESTS AND INSPECTIONS

6:12.1 General: All tests shall be conducted in accordance with latest applicable standard procedures and test codes. So far as is practicable, tests shall be made on completely assembled equipment. Full certified and notarized test reports including test readings, computations and other pertinent data shall be submitted to the ENGINEER for check and approval.

6:12.2 Factory Tests and Inspection: A list of standard factory tests which will be performed before shipment of the unit and of each class of equipment and material shall be furnished to the ENGINEER.

a. Factory tests on the turbine shall include but not be limited to:

1. Balancing of power turbine and gas generator rotors.

2. Assembly and no-load operation to test:

(a). Vibration

(b). Temperatures

(c). Control systems

(d). **Accessory equipment and devices**

(e). **Overspeed trip**

b. **Factory tests on the generator shall include but not be limited to:**

1. Balancing of rotor

2. High speed run

3. Measurement of cold resistance of windings

4. Measurement of insulation resistance

5. Dielectric tests

6. Check of temperature detector elements.

c. Factory tests on the exciter shall include but not be limited to:

1. Balancing of rotor

2. High speed run

3. Measurement of cold resistance of windings

4. Commutation adjustments

5. Measurement of saturation and voltage regulation

6. Measurement of insulation resistance

7. Dielectric tests

Written notice shall be given to the ENGINEER of all factory tests sufficiently in advance so that arrangements can be made to have a representative present. Witnessing or waiving of witnessing of factory tests shall not relieve the CONTRACTOR of responsibility for furnishing the equipment in accordance with specifications.

6:12.3 **Field Tests: After installation, the equipment shall be prepared for operation, including making of such operational checks and tests as are required to demonstrate readiness of all equipment supplied and proper functioning of all equipment items. Tests in cooperation with other equipment shall be made after required routine tests have been performed on each component. Such work and tests shall include:**

a. Functional and operational tests of all accessories, appurtenances, controls, instrumentation and all other systems.

b. Continuity and correctness of all power and control wiring.

c. Insulation resistance of main generator and exciter windings.

d. Drying of generator windings if deemed necessary.

e. Megger and high potential tests (at 75% of factory test potential) on main and field windings and on main power connections.

f. Measurement of resistance of grounding system.

g. Preliminary operational tests of complete assembly, including checking of performance, temperatures, noise and vibration.

Before final acceptance, field performance tests shall be conducted on the installed unit for the purpose of determining vibration, capability, heat rates and data pertaining to operation at various loads.

1. 24 hour operation of unit and all accessories at 100% load.

2. After test number one is completed, the unit shall be subjected to a sudden loading test and a sudden tripping test.

Sufficient tests shall be run to determine actual efficiencies of the unit under all conditions guaranteed. Such tests shall be conducted under conditions maintained as close to contract conditions as station operation permits, but curves which the manufacturer shall furnish as part of the proposal shall be used where necessary to correct for variations in ambient temperature, fuel heating value, etc.

The CONTRACTOR shall furnish all connections and instruments necessary for conducting field tests.

The OWNER will furnish fuel, water, power, lubricants and similar items incidental to the operation of the equipment, including regular station personnel.

If the results indicate that performance is within the contract limits, the equipment may be considered for acceptance. If there is indication of deficiency in performance, the conducting of ASME precision tests may be considered.

New Para.

6:13 FINISHING, CLEANING AND PAINTING

The equipment as a whole shall be neatly finished. All exposed metal parts shall be smooth and free from burrs or fins.

Casting shall be sound, free from blowholes, cold shuts, sinks or tool marks. Patching, peening or caulking will not be permitted. Equipment components shall be carefully and thoroughly cleaned prior to assembly and interiors of equipment shall be free of extraneous material at the time that covers are finally closed prior to shipment. All normally painted surfaces shall be carefully dressed down, filled, cleaned of grease, rust, scale and painted with two shop coats of suitable high quality paint. Pipe threads and flanges shall not be painted.

6:14 OVERHEAD LINE CONNECTIONS TO EXISTING 70 KV BUS

Underground

6:14.1 Two overhead 70 kV three phase lines with overhead neutral conductor shall be furnished.

entrenched cables

Each line conductor and neutral shall be insulated for 70 kV; (6 units - 5¾" x 10" ball and socket type insulators) and shall be 477 MCM 26/7 ACSR conductor. Each line will transmit power from the high tension terminals of generator transformers to the existing substation structure connection and from the line termination on the substation structure to the existing buses shall be made through power circuit breaker and disconnect switches to the No. 1 and No. 2 main station buses, all as shown on single line diagram No. 2861-7-B1 and described in these specifications. All equipment, materials, labor and services, except civil work described elsewhere, to connect the gas turbine units to OWNER's existing 70 kV buses shall be furnished by the CONTRACTOR.

Mach

6:14.2 A take off structure shall be provided at each step-up transformer to terminate the overhead line at the generation end. Structures shall also be provided to support the four selector air break switches placed in the existing substation. These structures

may either be galvanized steel or high strength aluminum alloy. If steel, all parts shall be galvanized according to ASTM A:123 after fabrication. Steel bolts used with steel structures shall conform to ASTM 394. Aluminum structures shall be 6061-T6 aluminum alloy.

Design and fabrication of structure shall be in accordance with applicable parts or NEMA standards SG-6 part 8 with no ice load.

Clearance and spacing of conductors and parts shall be according to applicable portions of NEMA standard SG-6.

Main to Spec

Underground Cable

6:14.3 Conductors used to connect the overhead line through the power circuit breaker and selector switches to the existing buses shall be bare 477 MCM Aluminum. All connectors used shall be compression type using an inhibitor at all connection points.

6:15 ELECTRICAL INTERLOCKS

The system shall be designed with interlocks as follows:

a. Breaker 52 G (generator breaker) must be open before breaker No. 152 can be closed.

In addition, the selector disconnecting switches must be interlocked in such a manner that the existing bus tie breaker cannot be opened if both disconnect switches are closed. Also, if either one of the switches is in a closed position the second switch may not be closed until the bus tie breaker is closed.

SECTION VII

CONSTRUCTION

7:1 SCOPE OF WORK

7:1.1 General: This section of the specification covers the furnishing of all materials, equipment and labor and performing all operations required for the installation of the gas turbine generator units complete with all accessories and plant auxiliary equipment. Items to be included are equipment erection, electrical work, piping, and all other items of construction required for a complete operating power plant. OWNER will provide civil works construction according to CONTRACTOR's design and requirements.

7:1.2 Work by the CONTRACTOR: The CONTRACTOR shall be responsible for the installation of all equipment furnished by him.

His work shall include but not be limited to the following:

a. Installation Service. Furnish the services of a Superintendent who shall supervise and assist in the unloading, transporting, installing, starting, placing in good operation and testing of the generating units and accessory equipment. See Paragraph No. 3:3.

b. Foundations:

1. Design and furnish detailed construction drawing for all equipment foundations.

2. Furnish and deliver all foundation bolts and embedded parts (except reinforcing steel or mesh) required. This material will be installed by OWNER.

3. Grouting of all equipment after installation and alignment.

4. Piling will be required for major equipment foundations. OWNER has facilities for installing square precast concrete piles.

A boring log is attached in Appendix I.

c. Concrete strengths required.

d. Specifications for cement, water, aggregates, and re-inforcing materials.

e. Construction and Erection as follows:

1. Complete engineering and erection of all equipment within the specified boundary limits. This shall include mechanical and electrical services, enclosures, interconnections and miscellaneous structural steel.

2. The responsibility for receiving, unloading, and handling at the site, erection, and assembly, together with alignment, grounding, and mechanical and electrical connections of apparatus furnished by the manufacturer.

3. The erection of a turbine air inlet system as part of this plant as outlined in turbine equipment section.

4. The erection of a turbine exhaust system as outlined in turbine equipment section.

5. Installation of the remote control panel and the interconnecting wiring from the turbine control panel.

6. Furnish all special erection tools and equipment, instruments etc. as required during the installation period.

7. Furnish all necessary material and labor to perform initial and finish painting.

7:1.3 Work by OWNER:

a. Stripping the site of all organic growth and obstructions.

b. Excavating for all foundations and slabs to elevations and dimensions indicated by the CONTRACTOR.

c. Filling and backfilling with approved material to proper density and compaction.

d. Finish grading within ten feet of the building on all sides to insure proper drainage.

e. Furnish and install all foundation piles required for equipment.

f. Furnish and install all foundation required according to CONTRACTOR's drawings and specifications. This includes furnishing labor, forms, cement, aggregates, reinforcing steel for all foundations. Foundation bolts and other embedded parts will be installed, however the furnishing and delivery to site of such material is the responsibility of the CONTRACTOR.

7:2 EQUIPMENT INSTALLATION

7:2.1 General: Equipment shall be installed in the designated locations and assembled in a workmanlike manner following the best practice of the trades, with mechanics skilled in the erection, alignment and adjustment of such equipment. Erection of the turbine, including but not limited to the setting of the base plates and assembly of the machine and all accessory systems, shall be performed under the technical direction of the manufacturer's Superintendent in accordance with the requirements specified herein.

7:2.2 Care of Equipment: All equipment, installed or in storage, shall be adequately covered and protected at all times against dirt, water, chemical and mechanical injury.

All equipment shall be handled in such a manner as to avoid marring, scratching, or gouging the exterior finish.

Lifting slings shall be padded when they touch the external surface of the equipment.

7:2.3 Alignment and Leveling: Special care shall be used in locating, aligning and leveling all equipment and parts thereof to insure that each item is in the proper position relative to other equipment and that all parts are in exact alignment. The CONTRACTOR shall be responsible for this accuracy, and shall employ a competent surveyor to set all lines and levels of equipment to the accuracy required.

7:2.4 Blocking and Wedging: All blocking and wedging required for the proper support and leveling of equipment during installation shall be furnished by the CONTRACTOR. All temporary supports shall be removed, except steel wedges and shims which may be left in place.

7:2.5 Connections: Where necessary, unfair holes shall be reamed. Excessive driving of bolts or keys will not be permitted. Each unit shall be aligned accurately by steel shims or by other methods so that no binding in any moving part or distortion of any member shall occur before it is finally fastened in place. The alignment of parts with respect to each other shall be true within the respective tolerances required.

7:2.6 Welding: All field welding shall be done by the electric-arc method, except as otherwise specifically permitted. The welding electrodes shall be of heavily coated type designed for all-position welding. In assembling and during welding, the component parts of built-up members shall be held in place by sufficient clamps or other adequate devices to keep all parts in proper position.

7:2.7 Tools: Stillson wrenches, cold chisels or other tools likely to cause injury to or mar the surface on rods, nuts or other parts shall not be used for the work of assembling and tightening nuts. Bolts and nuts shall be tightened firmly and uniformly, but care shall be taken not to overstress the threads by excessive force or by wrenches of excessive length. Threads of all bolts, nuts and screws shall be lubricated by graphite and oil before assembly.

7:3 PIPING

7:3.1 General: This section covers the furnishing of all labor and materials for the piping installation of the new gas-turbine generator unit.

a. Fuel oil supply piping from the outlet and recirculating inlet flanges on the fuel oil storage tanks through the fuel oil forwarding pump station to the liquid fuel inlet and recirculating connections on the new gas-turbine generator unit shall be properly sized, furnished and installed to include all necessary valves, devices, fittings, etc.

b. Excluded. All piping integral to e new gas-turbine generator unit shall be as recommended and furnished by the manufacturer of the unit.

7:3.2 Piping Material: All lubricating and fuel oil piping shall be pickled. Oil piping in general shall be 150 lb. ANSI standard carbon steel. Flanges against cast iron valves or nozzles shall be flat faced. Unions shall be used only where necessary. Welding shall be used in preference to screwed or flanged construction.

Pipe - Shall be seamless carbon steel, ASTM specification A106, Grade B. Sizes 1-1/2" and smaller pipe shall be schedule 80; 2" to 6" pipe shall be schedule 40.

Fittings - 2" and smaller shall be forged steel, ASTM A105, Grade II, 3000 lb., 2-1/2" and larger shall be seamless, butt welded, ASTM A234, WPA std. wt.

Flanges - 2" and smaller shall be screwed or socket weld, ASTM A181, Grade 1, 150 lb. rating, raised face. 2-1/2" and larger shall be welded neck, ASTM A181, Grade 1, 150 lb. rating, raised face schedule 40.

Gaskets - shall be flat ring, 1/16" thick vellumoid or equal, 150 lb. ANSI B16.21.

Bolting - shall be stud bolts with two nuts. Stud continuously threaded ASTM A193, Grade B7, chromemoly steel. Nuts to be hexagon, semifinished "heavy series" ANSI B18.2, ASTM A194, Grade 2H carbon steel.

Valves - fuel oil shut-off valves shall be plug type with flanged end connections, cast steel body with Teflon or Buna - N trim. Check valves shall be swing type with flanged end connections and cast steel body with Teflon or Buna - N trim. Pressure rating of all valves shall be higher than the service conditions required.

7:3.3 Underground Steel Piping: Shall be coated and wrapped in accordance with AWWA C203-66 or as follows: 3/32" of coal-tar enamel shall be applied in two flood coats. A fiberglass mat shall be embedded in the enamel to remove all air bubbles. Wrap with 15 pound coal-tar saturated asbestos pipe line felt. Finish with a Kraft paper wrapping. Field welds shall be coated with Trans-Tex Primer and wrapped with Trans-Tex tape in accordance with the manufacturer's recommendations.

7:3.4 Installation and Cleaning: Care shall be taken to insure against dirt or chemical contamination of piping during fabrication, coating and installation. On completion of the piping systems, all pipe lines shall be thoroughly cleaned and flushed. The use of temporary flat or conical strainers between piping flanges is recommended. Frequent inspection and cleaning of permanent filter and strainer elements shall be required during the flushing period.

7:3.5 Pressure Testing of Piping

a. Codes. Tests shall be performed in accordance with the piping codes and the requirements noted herein. All tests shall be performed satisfactorily prior to backfilling.

b. Test. Fuel oil piping shall be subjected to a pressure of 75 psig for a period of two hours using compressed air.

c. Witness. The test shall be arranged so as to permit ecamination and inspection by the ENGINEER who shall be given notice in ample time to be present for the duration of the test.

d. Equipment Protection. Fabrication piping shall not be connected to equipment until testing has been completed. Prior to the application of pressure, restraining devices shall be applied to prevent distortion during pressure testing. The pressure test applies to the piping materials specified, but shall not be assumed to apply to specialties, accessories, or equipment including relief valves, expansion joints, instruments, filters, rupture discs, etc. Such items that may be damaged shall be either removed or blanked off.

e. Leak Detection. The test air pressure shall be gradually applied until 50% of the prescribed test pressure is attained, after which the pressure shall be increased to 100% by 10% increments. All potential leak sources shall be checked for leakage after applying each increment of pressure and at the end of the test period by coating with soap suds.

f. Repairs. All detectable leaks shall be properly repaired. Defective welded joints shall be repaired by removing the weld by grinding and rewelding. All repaired piping shall be retested.

APPENDIX I

DRAWINGS

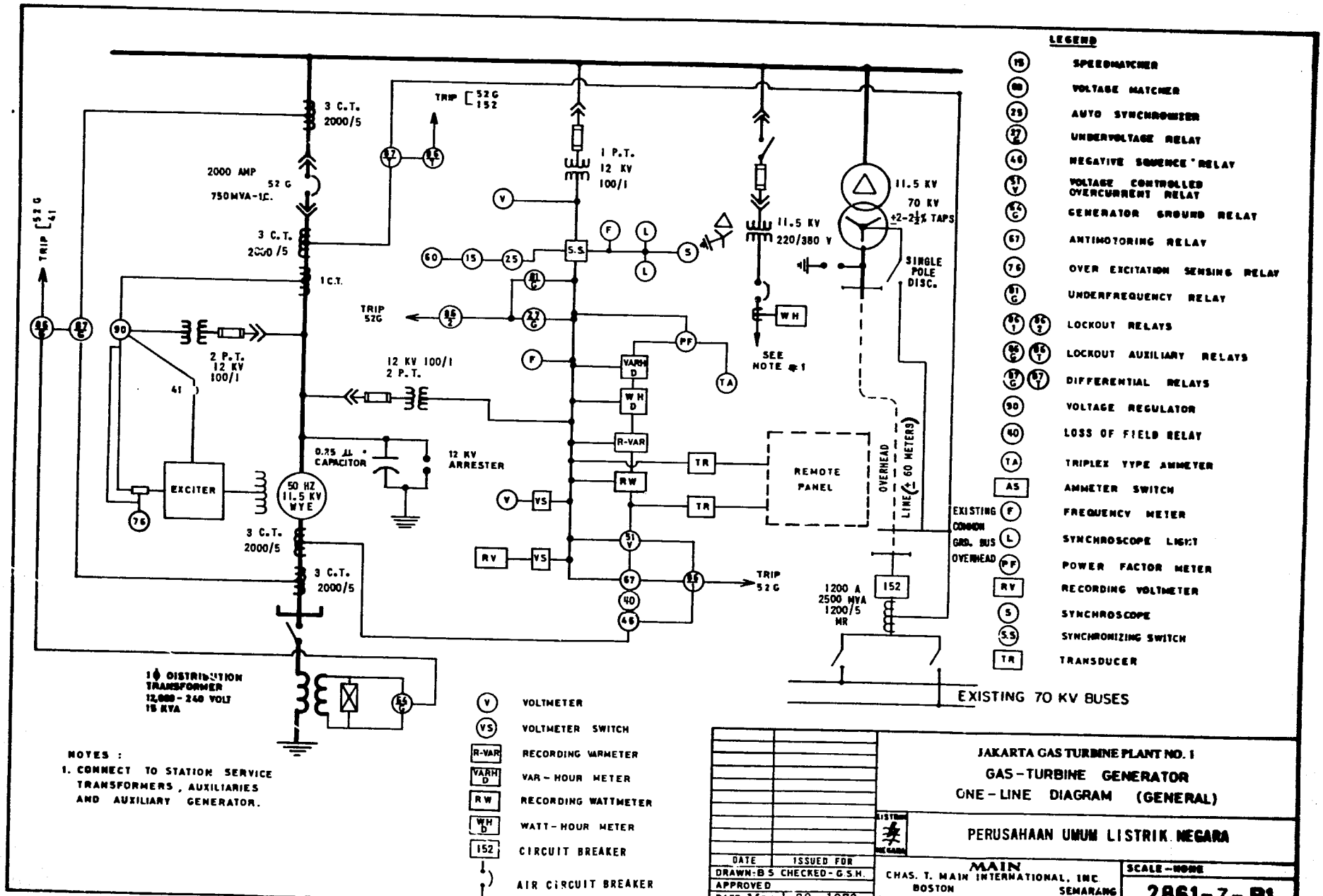
LEGEND
SPEEDMATCHER
VOLTAGE MATCHER
AUTO SYNCHRONIZER
UNDERVOLTAGE RELAY
NEGATIVE SEQUENCE RELAY
VOLTAGE CONTROLLED OVERCURRENT RELAY
GENERATOR GROUND RELAY
ANTIMOTORING RELAY
OVER EXCITATION SENSING RELAY
UNDERFREQUENCY RELAY
LOCKOUT RELAYS
LOCKOUT AUXILIARY RELAYS
DIFFERENTIAL RELAYS
VOLTAGE REGULATOR
LOSS OF FIELD RELAY
TRIPLEX TYPE AMMETER
AMMETER SWITCH
EXISTING COMMON GRD. BUS OVERHEAD
FREQUENCY METER
SYNCHROSCOPE LIGHT
POWER FACTOR METER
RECORDING VOLTMETER
SYNCHROSCOPE
SYNCHRONIZING SWITCH
TRANSDUCER
3 C.T. 2000/5
2000 AMP
52 G
750MVA-1C.
1 C.T.
TRIP 52G 41
TRIP 52G 152
1 P.T. 12 KV 100/1
11.5 KV
70 KV
±2-2½% TAPS
11.5 KV 220/380 V
SINGLE POLE DISC.
SEE NOTE #1
2 P.T. 12 KV 100/1
12 KV 100/1 2 P.T.
0.75 μf CAPACITOR
12 KV ARRESTER
EXCITER
50 HZ 11.5 KV WYE
REMOTE PANEL
OVERHEAD LINE (± 60 METERS)
1200 A 2500 MVA 1200/5 MR
EXISTING 70 KV BUSES
1 Φ DISTRIBUTION TRANSFORMER 12,000 - 240 VOLT 15 KVA
VOLTMETER
VOLTMETER SWITCH
RECORDING VARMETER
VAR - HOUR METER
RECORDING WATTMETER
WATT - HOUR METER
CIRCUIT BREAKER
AIR CIRCUIT BREAKER
NOTES :
1. CONNECT TO STATION SERVICE TRANSFORMERS, AUXILIARIES AND AUXILIARY GENERATOR.
JAKARTA GAS TURBINE PLANT NO. 1
GAS - TURBINE GENERATOR
ONE - LINE DIAGRAM (GENERAL)
PERUSAHAAN UMUM LISTRIK NEGARA
DATE
ISSUED FOR
DRAWN: B S
CHECKED - G.S.H.
APPROVED
DATE March 20, 1973
MAIN
CHAS. T. MAIN INTERNATIONAL, INC.
BOSTON
MASSACHUSETTS, U.S.A.
SEMARANG
INDONESIA
SCALE - NONE
2861-7-B1

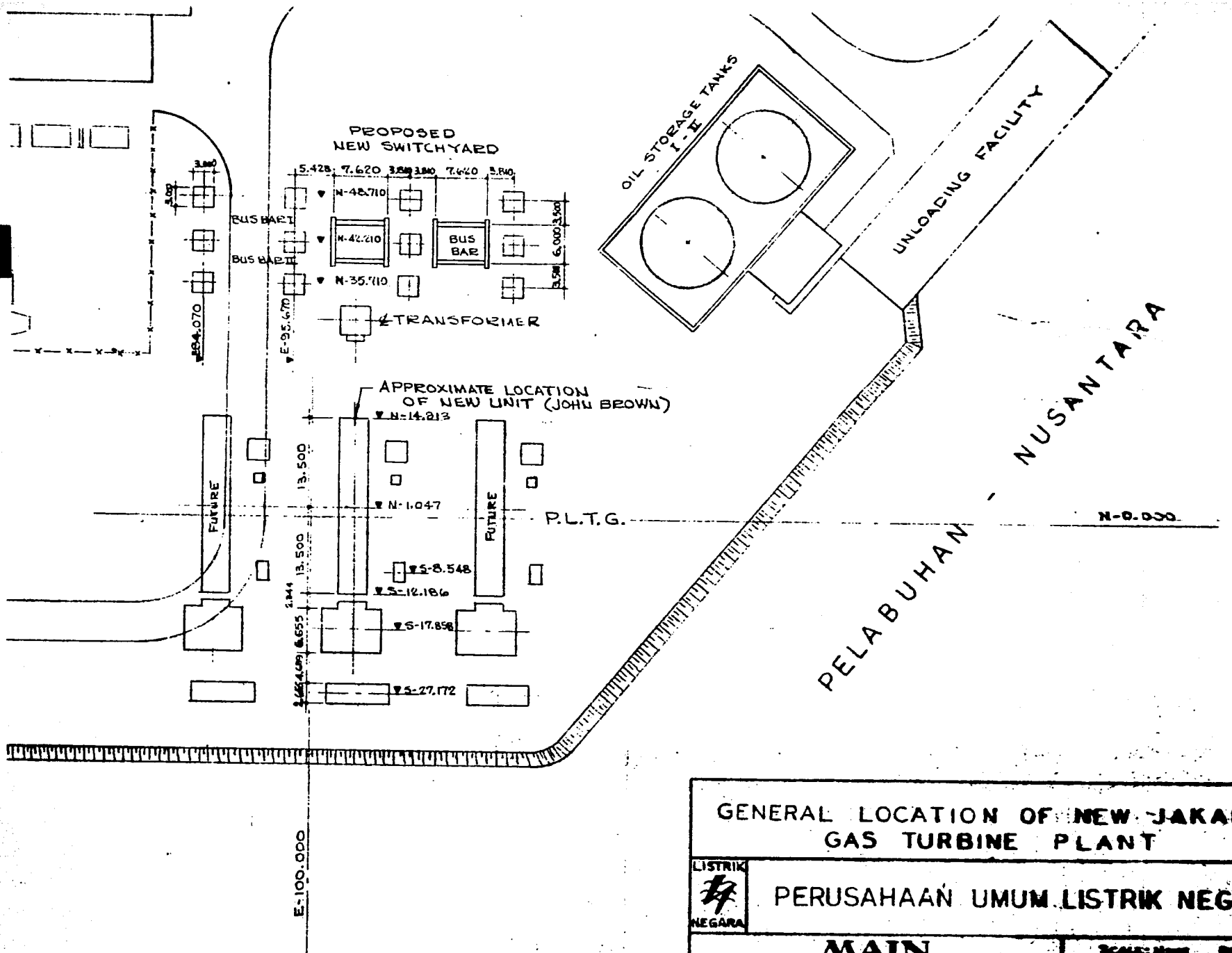

GENERAL LOCATION OF NEW JAKARTA GAS TURBINE PLANT

LISTRIK NEGARA

PERUSAHAAN UMUM LISTRIK NEGARA

MAIN

CHAS. T. MAIN INTERNATIONAL, INC.
BOSTON
MASSACHUSETTS

2861 - 7 - B2

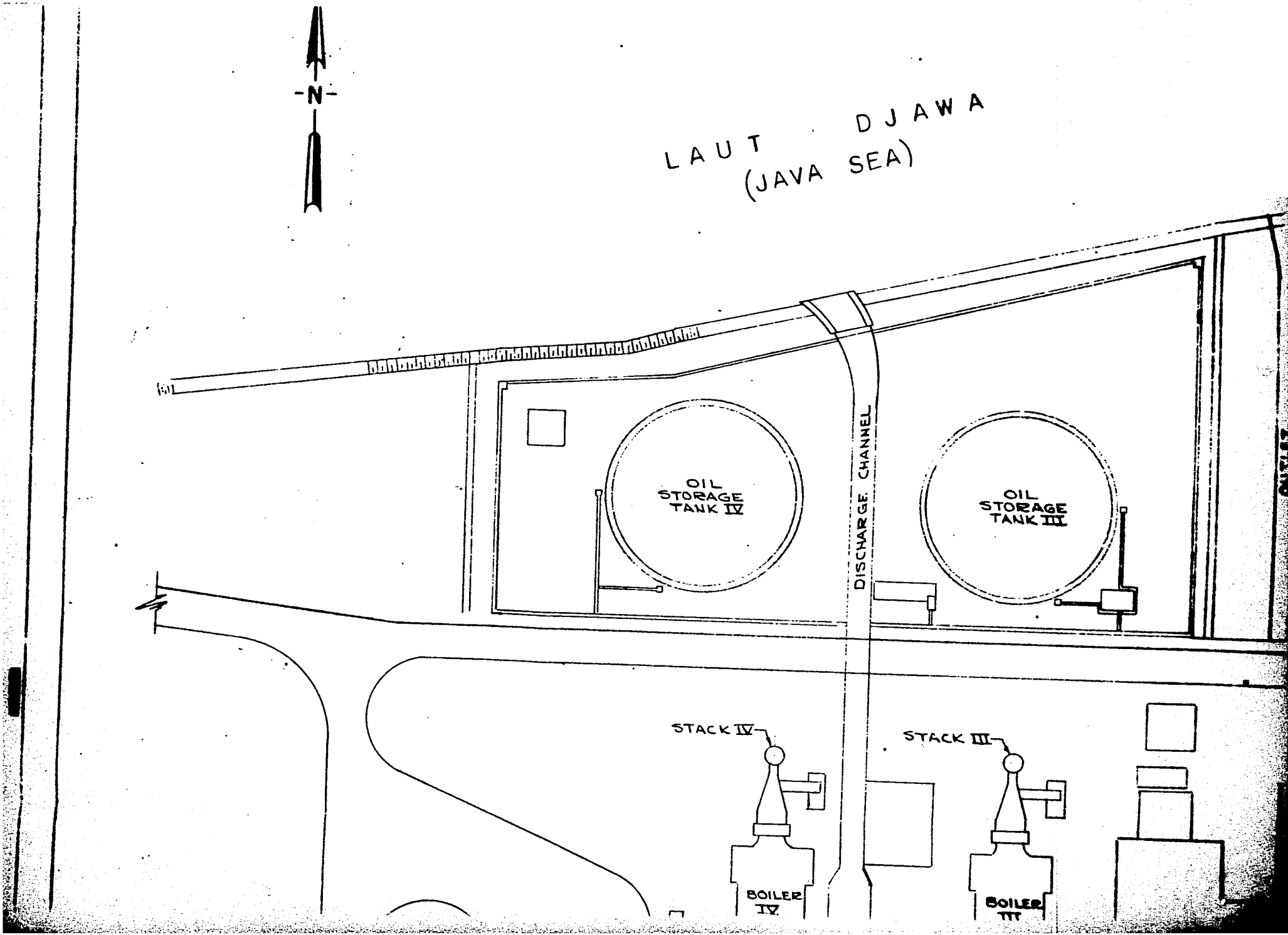
N
LAUT DJAWA
(JAVA SEA)
OIL STORAGE TANK IV
OIL STORAGE TANK III
DISCHARGE CHANNEL
STACK IV
STACK III
BOILER IV
BOILER III

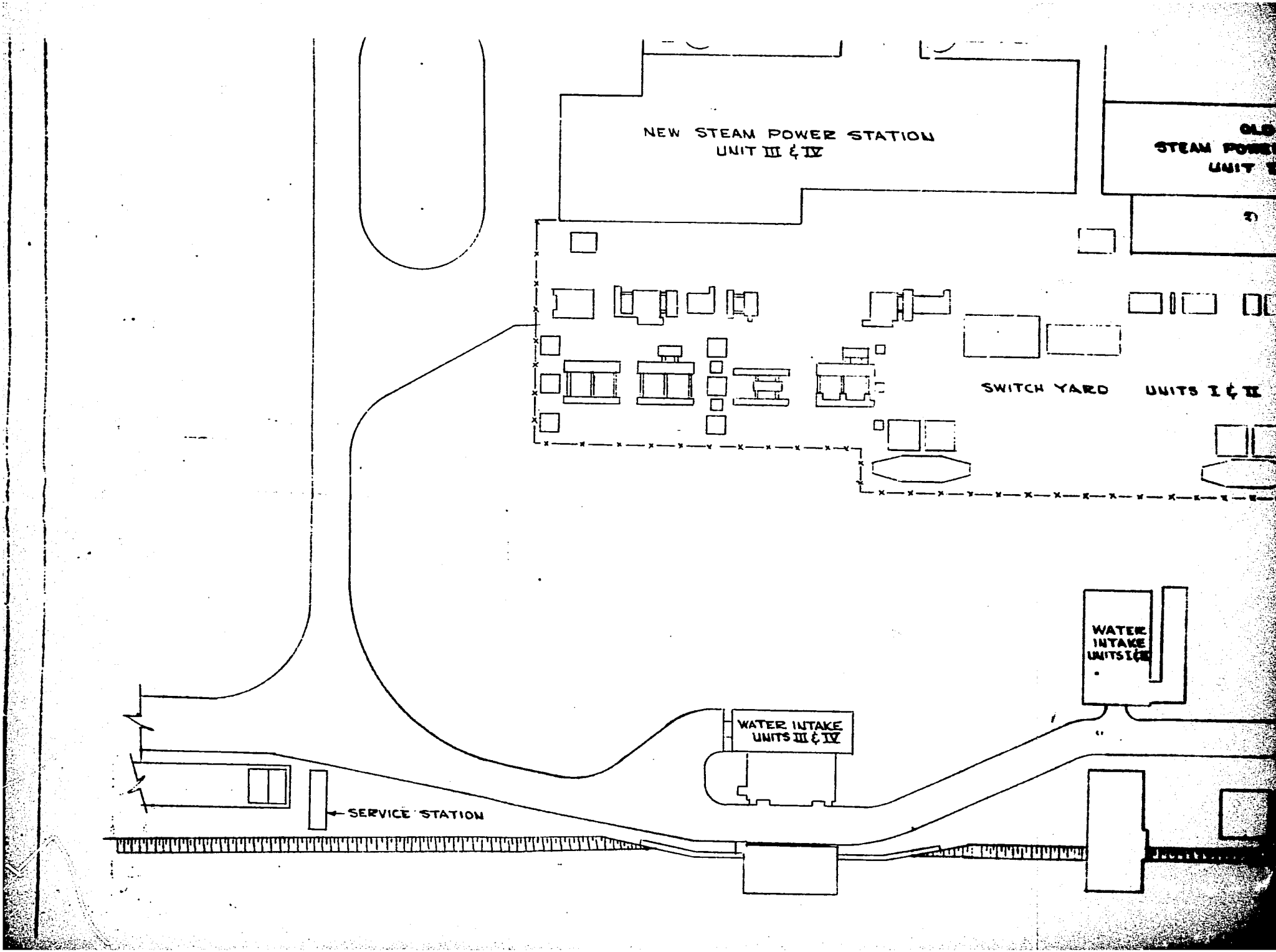
NEW STEAM POWER STATION
UNIT III & IV
SWITCH YARD
UNITS I & II
WATER INTAKE
UNITS III & IV
SERVICE STATION

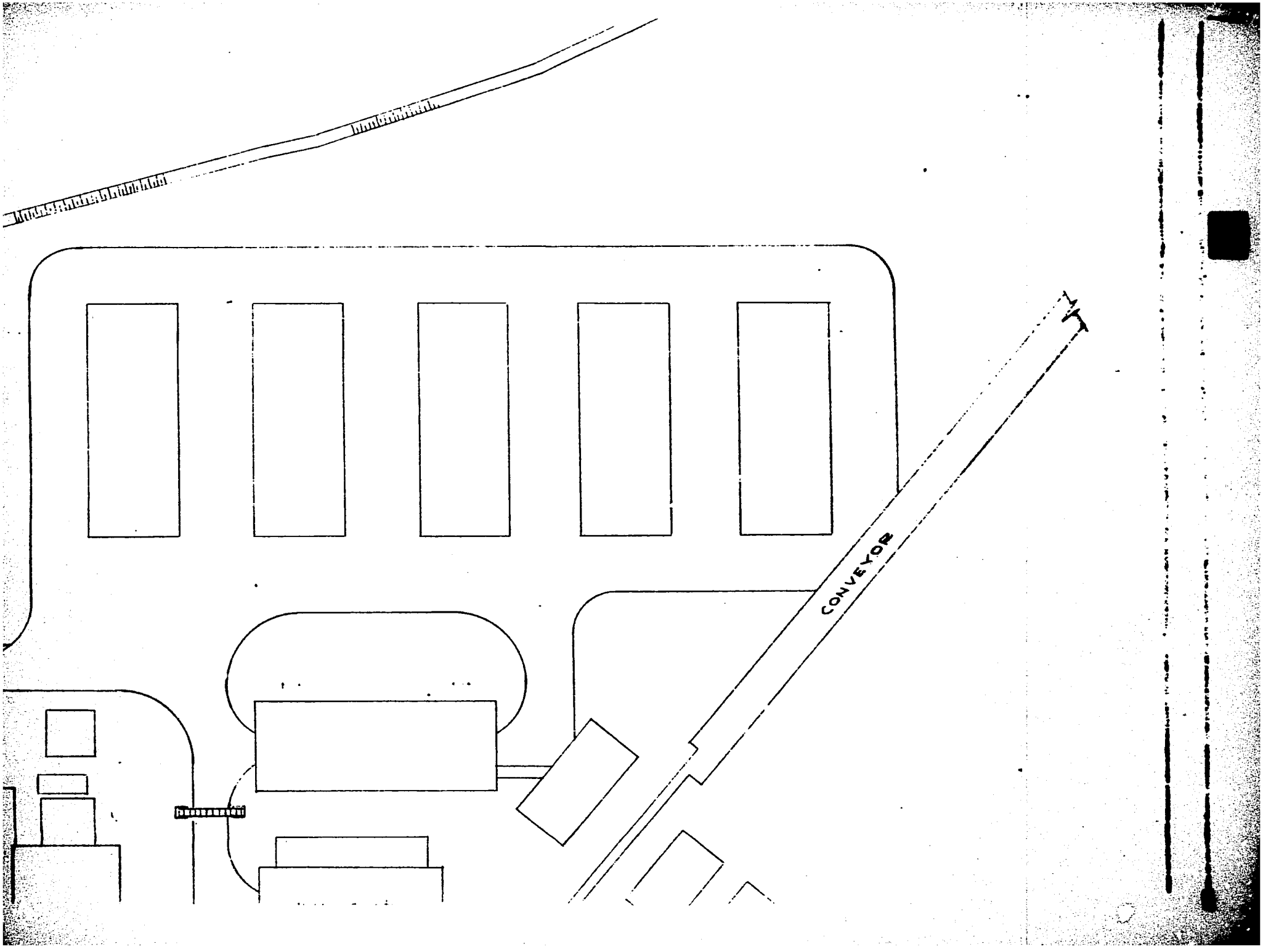
CONVEYOR

METERS		
0,00	Sand & shell	Sand & shells, Brown; medium grained sand and shell.
0,50	Tuffaceous sand	
0,50	Sandy clay	Tuffaceous sand.. Dark gray, medium grained sand with some tuff and gravel (dia. to 3 cm in core sample).
2,00		Sandy clay. Dark gray; tuffaceous clay, mixed fines to medium grained sand & shell fragments.
	Tuffaceous clay	Tuffaceous clay. Dark gray; some with decomposed plant material & shell fragments.
6,50		
	Clay	Clay. Gray; with very little tuff, also small shell fragments.
10,50		
11,00	Shell fragments	Shell fragments. Yellowish white. Concentration of shell fragments with little clay.
11,50	Coral limestone	Coral limestone. White; and gray.
12,00	Tuffaceous clay and shells.	Tuffaceous clay & shell fragements. Gray color.
12,50	Tuff. (weathered)	
13,00	Gravel	
13,50	Dense tuff.	Tuff. (weathered) Brown & rust colors; predominantly clay composition with some larger pieces of non-weathered dense tuff.
14,50	Sand	
15,00	Gravel & sand . . .	Gravel. Dark colored; diameters ranging between 1 & 2,5 cm in the core sample, may be embedded in a sand matrix.
	Dense tuff	Dense tuff. Brown; medium grained tuff particles sand brown; medium grained with non-fragmented shells & small corals in the upper part.
16,00		
	Very dense tuff . . .	Gravel & sand. Dark gray & dark brown sand with gravel of igneous rock & dense tuff (dia. from 2,5 - 3 cm in the sample).
19,00	. . . . .	Dense tuff. Dark brown; medium grained particles well cemented.
20,00	Tuff.	Very dense tuff. Dark Grayish brown fine grained particles, very well cemented.
	Dense tuff	Tuff. Brownish gray; very fine grained particles rather brittle, plant remains in the lower part.
21,00	Very dense tuff	Very dense tuff. Dark brownish gray; very well cemented.
21,50	Dense Tuff	
22,50		Dense tuff. Brownish gray; very fine grained particles.
23,10	Very dense tuff	Very dense tuff-breccis. Brownish gray matrix fine grained tuff particles with small angular fragments of igneous rock, very well cemented.
24,00	Very dense tuff	Very dense tuff. Brownish gray; medium grained tuff particles, very well cemented.

APPENDIX II

SAMPLE FORMS

AID 1440-3 (1-69)

CONSTRUCTION

FORM APPROVED
Budget Bureau No. 24-R0058

CONTRACTOR'S CERTIFICATE AND AGREEMENT WITH THE AGENCY FOR INTERNATIONAL DEVELOPMENT
CONTRACTOR'S INVOICE-AND-CONTRACT ABSTRACT

I. INVOICE AND CONTRACT INFORMATION

1. CONTRACTOR'S NAME AND ADDRESS	2. A.I.D. NUMBER
	3. CONTRACT IS FOR A. [ ] Professional Services B. [ ] Construction Services C. [ ] Major or Custom-Made Equipment

4. TYPE OF CONTRACT	5. CONTRACT DATE			6. INVOICE DATE			7. PROGRESS PAYMENT NUMBER	8. IF FINAL OR ONLY PAYMENT
[ ] Cost-plus-fixed-fee [ ] Other (Specify)	MONTH	DAY	YEAR	MONTH	DAY	YEAR		

9. TOTAL CONTRACT AMOUNT	10. TOTAL VALUE PROGRESS PAYMENTS PREVIOUSLY RECEIVED OR CLAIMED	11. INVOICE AMOUNT

II. PROGRESS PAYMENTS – Complete only when block 3.C. is checked and payment is requested in advance of delivery

12. ESTIMATED VALUE AS OF DATE OF THIS INVOICE		13. ESTIMATED VALUE, BY QUARTER, SINCE DATE OF LAST INVOICE		
EQUIPMENT DELIVERED	SERVICES RENDERED	QUARTER	EQUIPMENT DELIVERED	SERVICES RENDERED

III. INFORMATION AS TO COMMISSIONS, CREDITS, ALLOWANCES, SIMILAR PAYMENTS AND SIDE PAYMENTS

Complete only if block 3.C. is checked; if "none" check here [ ]

14. NAMES OF RECIPIENTS AND ADDRESSES	15. AMOUNT PAID OR TO BE PAID	
	INCLUDED IN INVOICE	NOT INCLUDED IN INVOICE

16. ADDITIONAL INFORMATION OR EXPLANATION OF ENTRIES

CONTRACTOR'S CERTIFICATE AND AGREEMENT WITH THE AGENCY FOR INTERNATIONAL DEVELOPMENT

The contractor hereby acknowledges notice that the sum indicated on the accompanying invoice as claimed to be due and owing under the terms of the contract identified above (hereafter referred to as "said contract") is to be paid, in whole or in part, out of funds made available by the United States under the Foreign Assistance Act of 1961, as amended. In consideration of the receipt of such sum, the contractor agrees with and certifies to A.I.D. as follows:

1. The undersigned is the contractor indicated in the Invoice-and-Contract Abstract above, is entitled under said contract to the payment of the sum claimed, and is executing this Certificate and Agreement for the purpose of obtaining such payment from funds made available by the United States as described above.

2. The contractor will, upon the request of A.I.D., promptly make appropriate refund to A.I.D. in the event of

(a) his nonperformance, in whole or in part, under said contract, or

(b) any breach by him of any of his undertakings in this Certificate and Agreement, or

(c) any false certification or representation made by him in this Certificate and Agreement or in the above Invoice-and-Contract Abstract in regard to the transaction indicated therein.

3. The contractor or his agent has not compensated any person to obtain said contract except to the extent, if any, indicated in Section III of the Invoice-and-Contract Abstract.

4. The contractor or his agent has not given or received and will not give or receive side payments, or any other payment or benefit whatever in connection with said transaction or any series of transactions of which said transaction is a part, other than those payments or benefits indicated in Section III of the Invoice-and-Contract Abstract. In addition, any commissions paid or to be paid in connection with said transaction are shown in Section III of the Invoice-and Contract Abstract. The contractor has not made any payment to the borrower, whether induced by threat or promise or otherwise in the nature of a kickback.

5. On the basis of information from such sources as are available to the contractor and to the best of his information and belief, any commodity or service supplied under said contract is of the source and origin specified in the contract and/or Letter of Credit.

6. The contractor will for a period of not less than three (3) years after the date of final payment maintain all business records and other documents which bear on his compliance with any of the undertakings and certifications herein and will at any time requested by A.I.D. make such records and documents available to A.I.D. for examination.

7. The contractor has filled in the applicable portions of the above Invoice-and-Contract Abstract, certifies to the correctness of the information shown therein, and will upon the request of A.I.D. promptly furnish to A.I.D. such additional information in such form relating to the contractor's compliance with his undertakings and certifications in this Contractor's Certificate and Agreement.

8. This agreement shall be deemed to be a contract made under the laws of the District of Columbia, U.S.A., and shall be governed by and construed in accordance with such laws.

Date _____ Name of Contractor (See Instructions) _____

Signature and Title _____

Place Executed (City, County, State, Country) _____

NOTES: (a) Any amendments of, or additions to, the printed provisions of this Contractor's Certificate and Agreement are improper and will not be considered a part hereof. (b) False statements herein are punishable by United States law. (c) The word "Copy" must be written after signature on all signed copies other than the original.

CONSTRUCTION

Appendix D(1), M.O. 1442.2, (TL 13:449)

INSTRUCTIONS

This form must be completed in the English language only. All amounts of money are to be shown in U.S. dollars.

A. REQUIREMENTS FOR FORM

1. WHEN REQUIRED. In A.I.D. dollar financed capital assistance, an original and two copies of this form are required to accompany the invoice when payment is claimed for engineering, other professional, and construction services, or construction of major or custom-made equipment or materials (except where such equipment materials are for the account of a fixed-price contractor). One copy should also be sent to the borrower. It is not required from suppliers of equipment or materials (other than major or custom-made equipment materials), or from suppliers to or subcontractors of a fixed price contractor. See definitions below in the instructions for completing block 3 of the invoice-and-contract abstract.

2. SECTIONS REQUIRING COMPLETION. The original certificate must be signed by an authorized official of the contractor who shall indicate thereon his title, the date, and the place of execution. All items in Section I of the invoice-and-contract abstract portion of the form must be completed in support of every invoice submitted by a contractor or the letters "NA" (not applicable) entered. Information in Section II on progress payments is required only when payment is on a contract for major or custom-made equipment materials and payment is requested in advance of delivery of such equipment materials. Information in Section III as to commissions, credits, allowances, similar payments and side payments is required if such payments are paid by, or in the case of side payments made to, a contractor for major or custom-made equipment materials.

B. OBTAINING FORMS

The forms may be obtained in limited quantities from banks holding A.I.D. letters of commitment, regional officers of the Department of Commerce, or the Distribution Branch, Agency for International Development, Washington, D.C. 20523. Forms may be reproduced provided the reproduction is identical in content, size, color, and format.

C. COMPLETING THE CONTRACTOR'S INVOICE-AND-CONTRACT ABSTRACT

The following describes the entries required in each block pursuant to the requirements in A, above.

SECTION I – INVOICE AND CONTRACT INFORMATION

BLOCK 1: Enter the name and principal address of the certifying contractor.

BLOCK 2: Insert the A.I.D. identification number furnished in the letter of credit, contract, or implementation instructions.

BLOCK 3: Check the appropriate box. Professional Services means architectural, engineering, and other services characterized as professional by the contract. The term includes any firm so characterized or whose contract reflects the rules of the A.I.D. Capital Projects Guidelines: Borrower Procurement of Engineering and Other Professional Services. Construction Services means any contractor characterized as a construction contractor by the contract or whose contract reflects the rules of the A.I.D. Capital Projects Guidelines: Borrower Procurement of Construction Services. Major or Custom-Made Equipment means equipment or materials characterized as major or custom-made by the contract, or procured under a contract which reflects the rules of Section 2 of the A.I.D. Capital Projects Guidelines: Borrower Procurement of Equipment and Materials.

BLOCK 4: Check the appropriate box if the invoice relates to a cost-plus-fixed-fee contract; otherwise, check "other" and specify the type of contract concerned, e.g. lump sum, unit price, etc.

BLOCK 5: Insert the contract date.

BLOCK 6: Insert the invoice date.

BLOCK 7: Enter the number of the progress or final payment being invoiced.

BLOCK 8: Check the box if the invoice is for the first and only payment or is for the final in a series of progress payments.

BLOCK 9: For cost reimbursement type contracts, enter the maximum price. For unit price contracts, enter the estimated total contract price.

BLOCK 10: Enter the total amount of progress payments which have been previously received and/or claimed under this contract prior to the current invoice.

BLOCK 11: Enter the net amount for which payment is being sought. It must not include any commissions, credits, allowances, or similar payments to or for the account of the borrower. Commissions paid or to be paid in connection with the transaction to agents of the contractor which are included in the amount shown in block 11 must be detailed in Section III.

SECTION II – PROGRESS PAYMENTS

BLOCK 12: Enter in the appropriate column the estimated total value of (a) major or custom-made equipment/materials delivered (including shipping, installation, and related costs) and (b) services rendered which are not included in (a) from the beginning of the contract up to and including the date of the invoice to which this form relates.

BLOCK 13: Show separately the estimated total value of (a) major or custom-made equipment/materials delivered (including shipping, installation, and related costs) since the date of the previous invoice, broken down by the calendar year quarter in which shipped; and (b) the estimated total value of services rendered which are not included in (a) performed since the date of the previous invoice.

SECTION III – INFORMATION AS TO COMMISSIONS, CREDITS, ALLOWANCES, SIMILAR PAYMENTS AND SIDE PAYMENTS

BLOCKS 14 and 15: Enter in these blocks pertinent information with reference to (a) commissions, credits, allowances, and similar payments paid or to be paid by the contractor to or for the benefit of his agent, and (b) any side payment, whether or not shown on the invoice, made or to be made by the borrower to the contractor in connection with the transaction. In block 16 indicate whether or not the amount is included in the invoice amount reported in block 11 by entering the amount of each payment opposite the related entry in the appropriate column "Included in Invoice" or "Not Included in Invoice." If there is insufficient room to furnish the information required in blocks 14 and 15, the information may be noted "Continued" or "See attached listing" and the required information either shown in the available space in block 16 or furnished on a listing attached to the form. If no commissions, credits, allowances, similar payments and side payments are involved, check "None".

GPO 868-200

STANDARD FORM 24
JUNE 1964 EDITION
GENERAL SERVICES ADMINISTRATION
FED PROC REG (41 CFR) 1-16.801

BID BOND

(See Instructions on reverse)

24-103

DATE BOND EXECUTED *(Must not be later than bid opening date)*

PRINCIPAL *(Legal name and business address)*

TYPE OF ORGANIZATION *("X" one)*

☐ INDIVIDUAL ☐ PARTNERSHIP
☐ JOINT VENTURE ☐ CORPORATION

STATE OF INCORPORATION

SURETY(IES) *(Name and business address)*

PENAL SUM OF BOND					BID IDENTIFICATION	
PERCENT OF BID PRICE	AMOUNT NOT TO EXCEED				BID DATE	INVITATION NO
	MILLION(S)	THOUSAND(S)	HUNDRED(S)	CENTS	FOR *(Construction, Supplies or Services)*	

KNOW ALL MEN BY THESE PRESENTS, That we, the Principal and Surety(ies) hereto, are firmly bound to the Perusahaan Umum Listrik Negara (hereafter called PLN) in the above penal sum for the payment of which we bind ourselves, our heirs, executors, administrators, and successors, jointly and severally: *Provided*, That, where the Sureties are corporations acting as co-sureties, we, the Sureties, bind ourselves in such sum "jointly and severally" as well as "severally" only for the purpose of allowing a joint action or actions against any or all of us, and for all other purposes each Surety binds itself, jointly and severally with the Principal, for the payment of such sum only as is set forth opposite the name of such Surety, but if no limit of liability is indicated, the limit of liability shall be the full amount of the penal sum.

THE CONDITION OF THIS OBLIGATION IS SUCH, that whereas the Principal has submitted the bid identified above.

NOW, THEREFORE, if the Principal, upon acceptance by the PLN of his bid identified above, within the period specified therein for acceptance (sixty (60) days if no period is specified), shall execute such further contractual documents, if any, and give such bond(s) as may be required by the terms of the bid as accepted within the time specified (ten (10) days if no period is specified) after receipt of the forms by him, or in the event of failure so to execute such further contractual documents and give such bonds, if the Principal shall pay the PLN for any cost of procuring the work which exceeds the amount of his bid, then the above obligation shall be void and of no effect.

Each Surety executing this instrument hereby agrees that its obligation shall not be impaired by any extension(s) of the time for acceptance of the bid that the Principal may grant to the PLN notice of which extension(s) to the Surety(ies) being hereby waived; provided that such waiver of notice shall apply only with respect to extensions aggregating not more than sixty (60) calendar days in addition to the period originally allowed for acceptance of the bid.

IN WITNESS WHEREOF, the Principal and Surety(ies) have executed this bid bond and have affixed their seals on the date set forth above.

PRINCIPAL			
Signature(s)	1 *(Seal)*	2 *(Seal)*	*Corporate Seal*
Name(s) & Title(s) *(Typed)*	1	2	

INDIVIDUAL SURETIES		
Signature(s)	1 *(Seal)*	2 *(Seal)*
Name(s) *(Typed)*	1	2

CORPORATE SURETY(IES)					
SURETY A	Name & Address		STATE OF INC	LIABILITY LIMIT	*Corporate Seal*
	Signature(s)	1	2		
	Name(s) & Title(s) *(Typed)*	1	2		

CORPORATE SURETY(IES) (Continued)					
SURETY B	Name & Address		STATE OF INC	LIABILITY LIMIT	*Corporate Seal*
	Signature(s)	1	2		
	Name(s) & Title(s) *(Typed)*	1	2.		
SURETY C	Name & Address		STATE OF INC.	LIABILITY LIMIT	*Corporate Seal*
	Signature(s)	1	2.		
	Name(s) & Title(s) *(Typed)*	1	2		
SURETY D	Name & Address		STATE OF INC.	LIABILITY LIMIT	*Corporate Seal*
	Signature(s)	1	2.		
	Name(s) & Title(s) *(Typed)*	1	2		
SURETY E	Name & Address		STATE OF INC.	LIABILITY LIMIT	*Corporate Seal*
	Signature(s)	1	2.		
	Name(s) & Title(s) *(Typed)*	1	2		
SURETY F	Name & Address		STATE OF INC.	LIABILITY LIMIT	*Corporate Seal*
	Signature(s)	1	2		
	Name(s) & Title(s) *(Typed)*	1	2		
SURETY G	Name & Address		STATE OF INC	LIABILITY LIMIT	*Corporate Seal*
	Signature(s)	1	2.		
	Name(s) & Title(s) *(Typed)*	1	2.		

INSTRUCTIONS

1. This form is authorized for use whenever a bid guaranty is required in connection with construction work or the furnishing of supplies or services. There shall be no deviation from this form without approval by the Administrator of General Services.

2. The full legal name and business address of the Principal shall be inserted in the space designated "Principal" on the face of this form. The bond shall be signed by an authorized person. Where such person is signing in a representative capacity (e.g., an attorney-in-fact), but is not a member of the firm, partnership, or joint venture, or an officer of the corporation involved, evidence of his authority must be furnished.

3. The penal sum of the bond may be expressed as a percentage of the bid price if desired. In such cases, a maximum dollar limitation may be stipulated (e.g., 20% of the bid price but the amount not to exceed _____ dollars).

4. (a) Corporations executing the bond as sureties must be among those appearing on the Treasury Department's list of approved sureties and must be acting within the limitations set forth therein. Where more than a single corporate surety is involved, their names and addresses (city and State) shall be inserted in the spaces (Surety A, Surety B, etc.) headed "CORPORATE SURETY(IES)", and in the space designated "SURETY(IES)" on the face of this form only the letter identification of the Sureties shall be inserted.

(b) Where individual sureties execute the bond, they shall be two or more responsible persons. A completed Affidavit of Individual Surety (Standard Form 28), for each individual surety, shall accompany the bond. Such sureties may be required to furnish additional substantiating information concerning their assets and financial capability as the Government may require.

5. Corporations executing the bond shall affix their corporate seals. Individuals shall execute the bond opposite the word "Seal"; and, if executed in Maine or New Hampshire, shall also affix an adhesive seal.

6. The name of each person signing this bid bond should be typed in the space provided.

U S GOVERNMENT PRINTING OFFICE 1964 OF—703-286—91-D

STANDARD FORM 25
JUNE 1967 EDITION
GENERAL SERVICES ADMINISTRATION
FED PROC REG (41 CFR) 1-16.801

PERFORMANCE BOND

(See Instructions on reverse)

DATE BOND EXECUTED *(Must be same or later than date of contract)*

PRINCIPAL *(Legal name and business address)*

TYPE OF ORGANIZATION *("X" one)*

☐ INDIVIDUAL ☐ PARTNERSHIP

☐ JOINT VENTURE ☐ CORPORATION

STATE OF INCORPORATION

SURETY(IES) *(Name(s) and business address(es))*

PENAL SUM OF BOND

MILLION(S)	THOUSAND(S)	HUNDRED(S)	CENT(S)

CONTRACT DATE	CONTRACT NO

KNOW ALL MEN BY THESE PRESENTS, That we, the Principal and Surety(ies) hereto, are firmly bound to the Perusahaan Umum Listrik Negara (hereafter called PLN) in the above penal sum for the payment of which we bind ourselves, our heirs, executors, administrators, and successors, jointly and severally: *Provided*, That, where the Sureties are corporations acting as co-sureties, we, the Sureties, bind ourselves in such sum "jointly and severally" as well as "severally" only for the purpose of allowing a joint action or actions against any or all of us, and for all other purposes each Surety binds itself, jointly and severally with the Principal, for the payment of such sum only as is set forth opposite the name of such Surety, but if no limit of liability is indicated, the limit of liability shall be the full amount of the penal sum.

THE CONDITION OF THIS OBLIGATION IS SUCH, that whereas the Principal entered into the contract identified above;

NOW, THEREFORE, if the Principal shall:

(a) Perform and fulfill all the undertakings, covenants, terms, conditions, and agreements of said contract during the original term of said contract and any extensions thereof that may be granted by the PLN, with or without notice to the Surety(ies), and during the life of any guaranty required under the contract, and shall also perform and fulfill all the undertakings, covenants, terms, conditions, and agreements of any and all duly authorized modifications of said contract that may hereafter be made, notice of which modifications to the Surety(ies) being hereby waived; and

(b) If the said contract is subject to the Miller Act, as amended (40 U.S.C. 270a-270e), pay to the PLN the full amount of the taxes imposed by the Government which are collected, deducted, or withheld from wages paid by the Principal in carrying out the construction contract with respect to which this bond is furnished; then the above obligation shall be void and of no effect.

IN WITNESS WHEREOF, the Principal and Surety(ies) have executed this performance bond and have affixed their seals on the date set forth above.

PRINCIPAL

Signature(s)	1. *(Seal)*	2 *(Seal)*	*Corporate Seal*
Name(s) & Title(s) *(Typed)*	1.	2	

INDIVIDUAL SURETY(IES)

Signature(s)	1 *(Seal)*	2 *(Seal)*
Name(s) *(Typed)*	1	2

CORPORATE SURETY(IES)

SURETY A	Name & Address		STATE OF INC	LIABILITY LIMIT	*Corporate Seal*
	Signature(s)	1	2		
	Name(s) & Title(s) *(Typed)*	1	2		

25-105

CORPORATE SURETY(IES) (Continued)					
SURETY B	Name & Address		STATE OF INC.	LIABILITY LIMIT	Corporate Seal
	Signature(s)	1.	2.		
	Name(s) & Title(s) (Typed)	1.	2.		
SURETY C	Name & Address		STATE OF INC.	LIABILITY LIMIT	Corporate Seal
	Signature(s)	1.	2.		
	Name(s) & Title(s) (Typed)	1.	2.		
SURETY D	Name & Address		STATE OF INC.	LIABILITY LIMIT	Corporate Seal
	Signature(s)	1.	2.		
	Name(s) & Title(s) (Typed)	1	2.		
SURETY E	Name & Address		STATE OF INC.	LIABILITY LIMIT	Corporate Seal
	Signature(s)	1	2.		
	Name(s) & Title(s) (Typed)	1.	2		
SURETY F	Name & Address		STATE OF INC.	LIABILITY LIMIT	Corporate Seal
	Signature(s)	1	2.		
	Name(s) & Title(s) (Typed)	1	2.		
SURETY G	Name & Address		STATE OF INC.	LIABILITY LIMIT	Corporate Seal
	Signature(s)	1	2.		
	Name(s) & Title(s) (Typed)	1	2.		

BOND PREMIUM ▶	RATE PER THOUSAND $	TOTAL $

INSTRUCTIONS

1. This form is authorized for use in connection with contracts for construction work or the furnishing of supplies or services. There shall be no deviation from this form without approval by the Administrator of General Services.

2. The full legal name and business address of the Principal shall be inserted in the space designated "Principal" on the face of this form. The bond shall be signed by an authorized person. Where such person is signing in a representative capacity (e.g., an attorney-in-fact), but is not a member of the firm, partnership, or joint venture, or an officer of the corporation involved, evidence of his authority must be furnished.

3. (a) Corporations executing the bond as sureties must be among those appearing on the Treasury Department's list of approved sureties and must be acting within the limitations set forth therein. Where more than a single corporate surety is involved, their names and addresses (city and State) shall be inserted in the spaces (Surety A, Surety B, etc.) headed "CORPORATE SURETY(IES)", and in the space designated "SURETY(IES)" on the face of this form only the letter identification of the Sureties shall be inserted.

(b) Where individual sureties execute the bond, they shall be two or more responsible persons. A completed Affidavit of Individual Surety (Standard Form 28), for each individual surety, shall accompany the bond. Such sureties may be required to furnish additional substantiating information concerning their assets and financial capability as the Government may require.

4. Corporations executing the bond shall affix their corporate seals. Individuals shall execute the bond opposite the word "Seal"; and, if executed in Maine or New Hampshire, shall also affix an adhesive seal.

5. The name of each person signing this performance bond should be typed in the space provided.

U S GOVERNMENT PRINTING OFFICE 1967 O—255-156 (80G)

STANDARD FORM 25-A
JULY 1964 EDITION
GENERAL SERVICES ADMINISTRATION
FED. PROC. REG. (41 CFR) 1-16.801

PAYMENT BOND

(See Instructions on reverse)

25-202

DATE BOND EXECUTED *(Must be same or later than date of contract)*

PRINCIPAL *(Legal name and business address)*

TYPE OF ORGANIZATION *("X" one)*

☐ INDIVIDUAL ☐ PARTNERSHIP

☐ JOINT VENTURE ☐ CORPORATION

STATE OF INCORPORATION

SURETY(IES) *(Name(s) and business address(es))*

PENAL SUM OF BOND

MILLION(S)	THOUSAND(S)	HUNDRED(S)	CENT(S)

CONTRACT DATE	CONTRACT NO.

KNOW ALL MEN BY THESE PRESENTS, That we, the Principal and Surety(ies) hereto, are firmly bound to the Perusahaan Umum Listrik Negara (hereinafter called PLN) in the above penal sum for the payment of which we bind ourselves, our heirs, executors, administrators, and successors, jointly and severally: *Provided*, That, where the Sureties are corporations acting as co-sureties, we, the Sureties, bind ourselves in such sum "jointly and severally" as well as "severally" only for the purpose of allowing a joint action or actions against any or all of us, and for all other purposes each Surety binds itself, jointly and severally with the Principal, for the payment of such sum only as is set forth opposite the name of such Surety, but if no limit of liability is indicated, the limit of liability shall be the full amount of the penal sum.

THE CONDITION OF THIS OBLIGATION IS SUCH, that whereas the Principal entered into the contract identified above;

NOW, THEREFORE, if the Principal shall promptly make payment to all persons supplying labor and material in the prosecution of the work provided for in said contract, and any and all duly authorized modifications of said contract that may hereafter be made, notice of which modifications to the Surety(ies) being hereby waived, then the above obligation shall be void and of no effect.

IN WITNESS WHEREOF, the Principal and Surety(ies) have executed this payment bond and have affixed their seals on the date set forth above.

PRINCIPAL

Signature(s)	1. *(Seal)*	2. *(Seal)*	*Corporate Seal*
Name(s) & Title(s) *(Typed)*	1.	2.	

INDIVIDUAL SURETY(IES)

Signature(s)	1. *(Seal)*	2. *(Seal)*
Name(s) *(Typed)*	1.	2.

CORPORATE SURETY(IES)

SURETY A	Name & Address		STATE OF INC.	LIABILITY LIMIT	*Corporate Seal*
	Signature(s)	1.	2.		
	Name(s) & Title(s) *(Typed)*	1.	2.		

CORPORATE SURETY(IES) (Continued)					
SURETY B	Name & Address		STATE OF INC.	LIABILITY LIMIT	Corporate Seal
	Signature(s)	1	2		
	Name(s) & Title(s) (Typed)	1.	2.		
SURETY C	Name & Address		STATE OF INC.	LIABILITY LIMIT	Corporate Seal
	Signature(s)	1.	2.		
	Name(s) & Title(s) (Typed)	1.	2.		
SURETY D	Name & Address		STATE OF INC.	LIABILITY LIMIT	Corporate Seal
	Signature(s)	1.	2.		
	Name(s) & Title(s) (Typed)	1.	2.		
SURETY E	Name & Address		STATE OF INC.	LIABILITY LIMIT	Corporate Seal
	Signature(s)	1.	2.		
	Name(s) & Title(s) (Typed)	1.	2.		
SURETY F	Name & Address		STATE OF INC.	LIABILITY LIMIT	Corporate Seal
	Signature(s)	1.	2.		
	Name(s) & Title(s) (Typed)	1.	2.		
SURETY G	Name & Address		STATE OF INC.	LIABILITY LIMIT	Corporate Seal
	Signature(s)	1.	2.		
	Name(s) & Title(s) (Typed)	1.	2.		

INSTRUCTIONS

1. This form, for the protection of persons supplying labor and material, shall be used whenever a payment bond is required under the act of August 24, 1935, 49 Stat. 793, as amended (40 U.S.C. 270a–270e). There shall be no deviation from this form without approval by the Administrator of General Services.

2. The full legal name and business address of the Principal shall be inserted in the space designated "Principal" on the face of the form. The bond shall be signed by an authorized person. Where such person is signing in a representative capacity (e.g., an attorney-in-fact), but is not a member of the firm, partnership, or joint venture, or an officer of the corporation involved, evidence of his authority must be furnished.

3. (a) Corporations executing the bond as sureties must be among those appearing on the Treasury Department's list of approved sureties and must be acting within the limitations set forth therein. Where more than a single corporate surety is involved, their names and addresses (city and State) shall be inserted in the spaces (Surety A, Surety B, etc.) headed "CORPORATE SURETY(IES)", and in the space designated "SURETY(IES)" on the face of this form only the letter identification of the Sureties shall be inserted.

(b) Where individual sureties execute the bond, they shall be two or more responsible persons. A completed Affidavit of Individual Surety (Standard Form 28), for each individual surety, shall accompany the bond. Such sureties may be required to furnish additional substantiating information concerning their assets and financial capability as the Government may require.

4. Corporations executing the bond shall affix their corporate seals. Individuals shall execute the bond opposite the word "Seal"; and, if executed in Maine or New Hampshire, shall also affix an adhesive seal.

5. The name of each person signing this payment bond should be typed in the space provided.

U S GOVERNMENT PRINTING OFFICE 1964 OF—703-284—93D

ADDENDUM

ADDENDUM

GENERAL

All reference to 0.80 power factor in the specifications for the generators shall be 0.85 power factor.

All "Letter of Credit" should read "Letters of Credit".

1.1 Change date of opening from April 23, 1973 to April 30, 1973.

1:12.4 Delete Text. Replace with the following:

"Upon arrival in Indonesia the CONTRACTOR'S representative will consult with PLN and AID who will provide, in writing, procedures for the CONTRACTOR and his employees to follow in conversion of U.S. Dollars to Rupiahs. This may include but not be limited to conversion through PLN, National Banks, or other Indonesian and U.S. Governmental agencies. These procedures may be amended from time to time as conditions warrant".

2:0.13 "Commencing the Project" shall mean the date the Letter of Credit according to the contract is opened by the OWNER for the CONTRACTOR.

2:0.14 "PLANT" shall mean the labor, equipment, work materials and services furnished in connection with the construction of the Project at the site.

2:9.1 Line 8 following "workmanship" add "then delivered".

2:15.2 Line 1 following "Duties" add ", Import Taxes"

2:19.1 Line 5 following "defective" Delete the words "are unsuitable for the use and purposes intended" delete

Line 6 following "with the" delete the words "intent of the"

2:23.1 Line 4 following "U.S. Bank" add " , which should be a correspondent to the Bank Indonesia"

2:26.1 Line 5 following "Any" add "Willful or Negligent"

Line 8 following "libel" add . and delete balance of sentence.

2:26.3 Line 6 delete "the primary" and insert "a"

2:40 AFTER SALES SERVICE

(a) The CONTRACTOR warrants that complete components or spare parts for the plant will be available for 15 years after the date of completing the work.

(b) The CONTRACTOR's service personnel shall, from time to time at the OWNER's option, call at the OWNER's works in a consulting and advisory capacity.

3:1 Paragraph 3 Line 7 following "ratings" add "at ISO conditions"

3:5 **See "Field Test" 6:12.3**

3:9 **Add "the eight (8) sets of operating Instruction Books and Maintenance Manuals shall be furnished at least two (2) months prior to initial operation."**

4:3.1 **Line 5 following "letter of credit" add "provided that the foundation work is completed according to a initially agreed upon schedule of construction and provided that the foundation bolts and any other material supplied by the CONTRACTOR shall have been furnished according to that schedule, and"**

6:1.2 Line 4 change "45" to "30"

6:1.2a Line 2 following "dimensioned" add "... the metric system"

6:7.6b Line 4 Change "110 volts D-C to "125 volt D-C."

6:8.10g Add new paragraph.

"These breakers shall be operated remotely from both the gas-turbine units and the remote control panels described in paragraph 6:7.6. Control switches, indicating lights and interconnecting wiring shall be furnished."

6:8.11c Line 2 change word "manual" to "motor"

6:8.11f Add new paragraph.

"Motor mechanisms shall be furnished complete with necessary A and B switches for interlocking and external control and shall be operated by 125 volt D-C motors. These mechanisms shall be remotely and locally controlled. Remote control shall consist of control switch with indicating lights and interconnecting wiring furnished for both the gas turbine generating units and the remote control panels described in paragraph 6:7.6."

Add to Paragraph 7:1.2b1

All dimensions and standard measurement shall be in the metric system.

Add new Paragraph 7:1.2f1

The CONTRACTOR shall furnish to the OWNER and ENGINEER an equipment delivery schedule and a construction schedule including the civil work. Such construction schedule shall be mutually agreeable to OWNER and CONTRACTOR.

7:1.2f2 Design and furnish detailed construction drawings for all equipment foundations and the statical calculation (based on elastic design) in conformity with the soil boring data; furnish also the design compression stress of designated concrete.

7:1.2f3 All designated concrete works should specify Portland cement, water, aggregates, reinforcing bars (ordinary round steel bars) shutterings and form work and cement admixtures (Cement, admixture, preferably stated in volume ratio).

7:1.2f4 **Specify the designated setting for the last ten blows for concrete piling if available pile-drive has a steam drop hammer of 5200 Kgs and maximum drop height of 1 meter.**

7:2.2f5 **OWNER has facilities for installing square precast concrete piles with maximum dimension of 40 x 40 cm and 20 m length.**

7:1.3d Add "Grading and drainage of site including cable, duct, and pipe pit must take into consideration the ground level of 2.104 meters and normal high water level of sea of 1.200 meters.

2:10.2 Add "Payment for work performed will not be withheld during arbitration". other than

2:35.1 Line 2 after the words "shall be" insert "in accordance with the specifications as specified hereunder".

2:35.3 Line 4 after the word "replaced" add the following words: "with respect to the defective component".

W. M. HALL
G. R. RICH
W. J. LESSARD
C. A. DAUBER
WM. BAUMRUCKER

MAIN

CHAS. T. MAIN INTERNATIONAL, INC.

Engineers

SOUTHEAST TOWER, PRUDENTIAL CENTER, BOSTON, MASSACHUSETTS 02199 U.S.A. • TEL. 617-262-3200
Telex: 094-6431 or 094-533
Cable: Chasmain

April 24, 1973

In the addendum to the specifications for the two gas turbines for the Jakarta area sent to you on April 20 there are some changes in the language of two items as follows:

4:3.1 - Line 5 following "letter of credit" replace with the following language:

"provided that the foundation work is completed according to a mutually agreed upon schedule of construction. The CONTRACTOR shall supply the foundation bolts and other embedded material in accordance with the agreed upon schedule of construction and any delay by the CONTRACTOR shall not extend the three hundred sixty-five (365) calendar days...."

2:35.1- Line 2 after the words "shall be" insert "in accordance with the specifications as specified hereunder" and delete "suited in all respects both to the purpose for which it is specified hereunder to be furnished."

Sincerely,

CHAS. T. MAIN INTERNATIONAL, INC.

Bruno M. Zambotti

BMZ:vac

Bruno M. Zambotti
Vice President

cc: Ir. Bagoes Moedijantoro

19 June 1973

The Following Revisions Shall Be Made to the Jakarta Gas Turbine IFB No. SP-2861-7-A and Addenda - Issued to the Bidders

Par. 1:1 - Change date of opening to July 7, 1973. Also delete Par. 1:1 of addendum regarding date of opening.

Par. 1:5.1 - Change "One hundred fifty (150) calendar days" to "Sixty (60) days". Also add "The equipment offered shall not be subject to prior sale during the validity of the proposal".

Par. 1:8.1 - Delete last sentence.

Par. 1:10.1 - Change "One hundred fifty (150) calendar days" to "Sixty (60) days".

Par. 1:10.2 - Add "and shall be payable to PLN".

Par. 1:10.3 - Add "and shall be payable to PLN".

Add new paragraph 2:15.6 - "Any taxes (including income, stamp and turnover taxes), duties, fees, charges, or assessments of any nature levied by any governmental authority other than of the U.S.A. in connection with this transaction, whether levied against OWNER, against CONTRACTOR or its non-Indonesian employees, or against any of CONTRACTOR'S non-Indonesian subcontractors or their employees, or otherwise, shall be for OWNER'S account and shall be paid directly by OWNER to the governmental authority concerned. If CONTRACTOR is required by law or otherwise to pay any such levy and/or fines, penalties, or assessments in the first instance, or as a result of OWNER'S failure to comply with any applicable laws or regulations governing the payment of such levies by OWNER, the amount of any payments so made by CONTRACTOR shall be reimbursed by OWNER to CONTRACTOR upon submission of CONTRACTOR'S invoices."

Par. 2:16 - Delete "or other prices" line 2.

Par. 2:23.1 - Delete "confirmed by" and substitute "in".

Par. 2:27 - Change first line to read "Subject to paragraphs 2:26.4 and 2:26.5, every right or remedy herein conferred upon or reserved to the OWNER or AID". In the fifth line change "measure of damage" to "remedy".

Par. 2:32 - Add "at no increase in cost to CONTRACTOR".

Par. 2:34 - Change fifth and sixth lines to read "connection with any USA patent or an Indonesia patent which is based upon and corresponds to the identical invention covered by a USA patent by the CONTRACTOR or out of the processes or".

Add new Par. 2:35.5 to read "The foregoing warranties are in lieu of all other warranties, whether oral, written, express, implied or statutory. Implied warranties of fitness and merchantability shall not apply. CONTRACTOR'S warranty and obligations and OWNER'S remedies there under (except as to title) are solely and exclusively as stated herein."

Par. 3:4 - After "plant" on line two add "and other suitable installations".

Par. 3:5.4 - Add "and shall not exceed 10 percent of lump sum price".

Par. 4:6 - Delete this paragraph.

Par. 4:11 - Price schedule should cover the following items:

1. Lump sum price for two units, including fuel treatment plant.
2. Lump sum price for fuel treatment plant.
3. Price per calendar day for instructor beyond the five-week training period.
4. Price for furnishing and delivery spare parts as recommended by the manufacturer for 15,000 hours of operation of each of the two units as offered. (Use separate sheets to detail quantity, description and price referring to Item 4 of the price schedule and sign each sheet).

Par. 4:11.1 - Change "30-day period" to "five-week training course".

Par. 6:3.5, 6:6.2 - Change power factor to 0.85. Also add "power factor of .85 means power factor of equipment without any compensating devices being added.

Par. 6:6.2 - Change ".58" to "not less than .47".

Par. 6:7.5 - Change "45 point" to "not less than 40 point".

Par. 6:7.2E - Add "or compartment heaters of capacity adequate to prevent condensation".

Par. 6:8.2A - Add "each bus duct shall be 40 feet long".

Addendum Par. 7:1.2F2 - Add "furnishing of reinforcing steel bending schedule shall be included."

General, change addendum "All reference to 0.80 power factor in the specification for the generators shall be changed to .85 power factor without any compensating devices added."

All previously issued addenda except as noted above are still effective.

Correct bid, performance and payment bond specimen as follows: The bid, performance and payment bonds should read such that the CONTRACTOR is bound to Perusahaan Umum Listrik Negara and not bound to U. S. government.

Par. 6:11.1 and 6:11.2 - "This information not to be included in BIDDERS proposal but is to be furnished when requested by OWNER".

Drawing 2861-7-B1, one-line diagram, should show the current transformer, associated with the 70 kV circuit breaker 152, to be rated at 1200/5 MR.

New Item: Additional material is required for extending existing 70 kV bus at Priok Steam Plant and should be supplied as follows:

A. 1000 feet of 1033.5 MCM 54/7 ACSR conductor.
B. 24 pieces strain insulator assemblies.
C. 18 pieces suspension insulators with suspension clamps for 1033.5 MCM ACSR conductor.
D. 12 pieces parallel groove clamps for 1033.5 MCM ACSR.
E. 6 pieces T bolted connectors for connecting 1033.5 to 477 MCM ACSR.

This additional material should be quoted as a separate item and is not included in the evaluation of bids.

Items B and C are to be connected to tower by 5/8 inch U bolts which should also be supplied. All insulators shall be ball and socket type 15,000 pound with seven insulators per assembly. CONTRACTOR does not supply design or construction.

General: All fuel rates are based on high heat value of fuel.