PD-AAC-248-B1

263-0016

(2)

DEPARTMENT OF STATE

AGENCY FOR INTERNATIONAL DEVELOPMENT
WASHINGTON

THE ADMINISTRATOR

165p.

GRANT AUTHORIZATION

Egypt: Applied Science and Technology Research

Provided from: Foreign Assistance Act, Part II, Chapter 4 ("Security Supporting Assistance"), Section 532

Pursuant to the authority vested in me as Administrator, Agency for International Development ("A.I.D."), by the Foreign Assistance Act of 1961, as amended, (the "Act"), and Delegations of Authority issued thereunder, I hereby authorize the furnishing of a grant (the "Grant") pursuant to Part II, Chapter 4 (Security Supporting Assistance), Section 532 of the Act, to the Government of the Arab Republic of Egypt (the "Grantee"), of not to exceed Three Million Nine Hundred Thousand United States Dollars ($3,900,000) to finance the foreign exchange costs of an applied science and technology research project designed to help organize and direct the Egyptian scientific community toward dealing with the practical problems inhibiting economic development and social improvement. The project will include: (1) training of Egyptians; (2) a science information system; (3) advisory assistance from the American research community; and (4) incentives for Egyptian researchers to address the national development priorities —this includes stipends, equipment and instrumentation essential for the research.

I hereby authorize incremental funding for this project.

The Grant shall be subject to the following terms and conditions:

(a) Unless A.I.D. otherwise agrees in writing, goods and services financed under the Grant shall have their source and origin in the United States of America.

(b) The Grant shall be subject to such other terms and conditions as A.I.D. may deem advisable.

Daniel Parker

14 Dec 75

Date

DEC 1 2 1976

ACTION MEMORANDUM FOR THE ADMINISTRATOR

THRU: ES

THRU: AA/PPC, Philip Birnbaum

FROM: AA/NE, Robert H. Nooter

SUBJECT: EGYPT - Authorization to Provide Project Funds for "Applied Science and Technology Research" - $3,900,000

Problem: Your authorization is requested for grant funding of the "Applied Science and Technology Research Project" which was approved by the Near East Bureau Advisory Committee on November 30, 1976. (The project paper is attached at TAB B.) Financing required for the project is $3.9 million from FY 1977 Security Supporting Assistance funds, $4.2 million from FY 1978 Security Supporting Assistance funds, and an allocation by the Office of Management and Budget of 760 thousand Egyptian pounds from the United States Government holdings of excess currency. (In a separate action, the Near East Bureau will request Office of Management and Budget (OMB) for the allocation of Egyptian pounds. When allocated, an appropriate amendment to the attached authorization will be processed.)

Discussion: The Government of the Arab Republic of Egypt is fully aware of the important role that science and technology can play in the development of its economy, and in the solution of major social, environmental, and other problems. A number of constraints limit the effective utilization of the scientific and technological community's considerable institutional and personnel resources to solve such problems. These constraints include: (1) shortage of executive skills to formulate policy and to plan, select, staff and monitor projects; (2) limited experience in the management of large-scale interdisciplinary research projects; (3) a dearth of essential equipment needed for research; (4) weak incentives for scientists and technicians to concentrate on applied research; and (5) a paucity of scientific and technological information that is up-to-date and readily available. This project will confront these constraints directly by financing advisory services, training, equipment procurement, incentives and the establishment of a scientific library system. In many instances, these inputs will be provided by supporting specific research projects which address the priority areas in the national development plan.

The Egyptian Government has delegated the overall task of coordinating national science policy and research to the Academy of Scientific Research and Technology, which currently oversees some 120 separate research efforts. This project will be implemented through the ASRT and the Egyptian National Research Council, the single most important research institution in Egypt, employing some 1800 scientists and technicians in fourteen disciplines.

We anticipate the involvement of the U.S. scientific community will be through the good offices of the U.S. National Academy of Sciences under a contract based upon a prospective predominant capability determination, and such determination will be made prior to contracting. The Academy's outreach to our scientific community is felt to be a natural complement to the role of the prestigious Egyptian Academy. The portion of the project that deals with scientific and technical information is expected to be handled through the U.S. National Science Foundation under a PASA arrangement. The NSF has been involved for the past two years in the design of the information program component through the U.S.-Egyptian Joint Working Group on Scientific and Technical Information.

Progress in moving the Egyptian scientific community toward more effective participation in key development areas will be measured through three basic evaluative techniques. First, the Mission will utilize its in-house capability to perform periodic evaluations, assisted at times by high-level advisors from the U.S. National Academy. In addition, advisory teams will be required to contribute evaluation of progress as part of their reports. The second major input will be made by the high-level Joint Consultative Committee of Americans and Egyptians, which will meet at six month intervals to review the project. Finally, an outside team will render a full evaluation in the second year of the project. This system of evaluations provides for both short interval corrective guidance and an in-depth, comprehensive evaluation based upon the longer run.

We will consider future support of the Egyptian scientific community in a longer term effort based upon the demonstrated efficacy of this project to affect the direction and efficiency of Egyptian research efforts relative to the national development priorities.

Since this project was not included in the FY 1977 Congressional Submission, as Advice of Program Change describing this project has

been prepared for transmittal to the Congress upon your approval of the project. Your authorization to obligate the requested funds will be contingent upon expiration of the fifteen days Congressional waiting period without adverse action by the Congress during that period.

Recommendation: That you approve funding for the project by signing the authorization attached at TAB A.

Attachment a/s

Drafted by: NE/ME/E:FGillespie:pe 9/10/76

Clearances:
NE/ME/E:CBuck_____
NE/ME:NLSweet_____
NE/DP:BLangmaid_____
NE/TECH:DSteinberg_____
GC/NE:RMeighan_____
PPC/DRPE:EHogan_____
GC:GMorgan_____

OPTIONAL FORM NO. 10
JULY 1973 EDITION
GSA FPMR (41 CFR) 101-11.6

UNITED STATES GOVERNMENT

Memorandum

TO : NE/CD, Mr. Selig A. Taubenblatt

DATE: 10 December 1976

FROM : NE/TECH, David I. Steinberg

SUBJECT: Initial Environmental Examination

Project Location: Arab Republic of Egypt

Project Title: Applied Science and Technology Research (263-0016)

AID Funding (Fiscal Year and Amount)

FY 77 Grant $3.9 million

FY 78 Grant $5.2 million

Additional funding of $1,368,000 will be supplied from U.S.-owned local excess currency over the two-year life of project.

Life of Project: Two years following signing of the Grant Agreement

IEE Prepared by: NE/TECH/SPHRRD: Thomas R. O'Dell 12/10/76

Environmental Action Recommended: Negative Determination

Concurrence:

GC/NE:RMeighan

NE/TECH/SPHRRD:EPike (draft) 12/9/76

NE Decision Approved

Disapproved

Date 12/10/76

5010-110

Buy U.S. Savings Bonds Regularly on the Payroll Savings Plan

Contents of Initial Environmental Examination

I. Examination of Nature, Scope, and Magnitude of Environmental Impacts

A. Description of Project

The purpose of this project is to fund the first phase of a longer term effort whose objective is to improve the effectiveness of Egyptian scientific and technological resources in applied research directed toward national development goals. The first phase is aimed at improving the management of applied research, and is preparatory to a more comprehensive follow-on to be designed during the implementation of this project. Working through the Academy of Scientific Research and Technology (ASRT), including the research councils, centers and institutes associated with it, especially the National Research Center (NRC), the project will pave the way for making scientific and technological research significantly more responsive than at present to (a) end-users and (b) national development goals.

The two-year project for which funds are requested will consist of six components:

1. Policy Planning and Management;
2. Research Project Support;
3. Demonstration Project Support;
4. Provision of Scientific Equipment;
5. Science and Technical Information; and
6. Planning for Phase II.

B. Identification and Evaluation of Environmental Impacts

As described in the Rules and Regulations, 216.2, Vol. 41, No. 127, June 30, 1976, Federal Register, "Not every AID activity...will be a major action significantly affecting the human environment for purposes of these procedures. For example, the following general classes of activities will not normally require the filling of an Environmental Impact Statement or the preparation of an Environmental Assessment:

1. Education or training programs not designed to result in activities directly affecting the environment;

2. Controlled experimentation exclusively for the purpose of research which is confined to small areas and carefully monitored;

3. Analyses, studies, academic or investigative research, workshops and meetings;

4. Projects where AID is a minor donor to a multi-donor project and there are no potential effects upon the environment of the U.S. or areas outside the nation's jurisdiction;

5. Document and information transfers."

Since Phase I of the project falls within the scope, 1, 2, 3, and 5, of the above categories, the requirement for an environmental impact statement or an environmental assessment does not apply at this time. An initial environmental examination and threshold decision to this effect is attached.

C.

The first phase of this project is primarily concerned with applied research and its management. None of the components will have an adverse affect on the environment at this stage of the project. (See attached form.)

II.

This project should receive a "Negative Determination" because the likelihood of any significant deterious impact on the environment will be negligible. Therefore, no further analysis is needed.

IMPACT IDENTIFICATION AND EVALUATION FORM

Impact Areas and Sub-areas 1/	Impact Identification and Evaluation 2/
A. LAND USE	
1. Changing the character of the land through:	
a. Increasing the population	N
b. Extracting natural resources	N
c. Land clearing	N
d. Changing soil character	N
2. Altering natural defenses	N
3. Foreclosing important uses	N
4. Jeopardizing man or his works	N
5. Other factors	
B. WATER QUALITY	
1. Physical state of water	N
2. Chemical and biological states	N
3. Ecological balance	N
4. Other factors	

1/ See Explanatory Notes for this form.

2/ Use the following symbols:
N - No environmental impact
L - Little environmental impact
M - Moderate environmental impact
H - High environmental impact
U - Unknown environmental impact

August 1976

C. AESTHETIC

1. Air additives ---------- N
2. Air pollution ---------- N
3. Noise pollution ---------- N
4. Other factors

D. NATURAL RESOURCES

1. Diversion, altered use of water ---------- N
2. Irreversible, inefficient commitments ---------- N
3. Other factors

E. CULTURAL

1. Altering physical symbols ---------- N
2. Dilution of cultural traditions ---------- N
3. Other factors

F. SOCIOECONOMIC

1. Changes in economic/employment patterns ---------- N
2. Changes in population ---------- N
3. Changes in cultural patterns ---------- N
4. Other factors

MICROFILMED FROM BEST
AVAILABLE COPY

MICROFILMED FROM BEST
AVAILABLE COPY

G. HEALTH

1. Changing a natural environment ---------- N
2. Eliminating an ecosystem element ---------- N
3. Other factors

H. GENERAL

1. International impacts ---------- N
2. Controversial impacts ---------- N
3. Larger program impacts ---------- N
4. Other factors

I. OTHER POSSIBLE IMPACTS (not listed above)

See attached Discussion of Impacts.

AGENCY FOR INTERNATIONAL DEVELOPMENT

PROJECT PAPER FACESHEET

TO BE COMPLETED BY ORIGINATING OFFICE

1. TRANSACTION CODE (X APPROPRIATE BOX)
[X] ORIGINAL [ ] CHANGE [ ] ADD [ ] DELETE

PP

DOCUMENT CODE 3

2. COUNTRY/REGIONAL ENTITY/GRANTEE
ARAB REPUBLIC OF EGYPT

3. DOCUMENT REVISION NUMBER

4. PROJECT NUMBER
263-0016

5. BUREAU
A. SYMBOL: NE
B. CODE: 3

6. ESTIMATED FY OF PROJECT COMPLETION
FY 79

7. PROJECT TITLE - SHORT (STAY WITHIN BRACKETS)
Applied Science and Technology Research

8. ESTIMATED FY OF AUTHORIZATION/OBLIGATION
A. INITIAL MO. YR. 02 77 B. FINAL FY 78

9. SECONDARY TECHNICAL CODES (MAXIMUM SIX CODES OF THREE POSITIONS EACH)

871	872	874	968	978	

10. ESTIMATED TOTAL COST ($000 OR EQUIVALENT, $1 = 0.56 LE)

A. PROGRAM FINANCING	FIRST YEAR B. FX	C. L/C	D. TOTAL	ALL YEARS E. FX	F. L/C	G. TOTAL
AID APPROPRIATED TOTAL	3,900		3,900	8,100		8,100
(GRANT)	(3,900)	( )	(3,900)	(8,100)	( )	(8,100)
(LOAN)	( )	( )	( )	( )	( )	( )
OTHER U.S. 1. Excess Currency		648	648		1,368	1,368
OTHER U.S. 2.						
HOST GOVERNMENT		1,314	1,314		2,670	2,670
OTHER DONOR(S)						
TOTALS	3,900	1,962	5,862	8,100	4,038	12,138

11. ESTIMATED COSTS/AID APPROPRIATED FUNDS ($000)

A. APPROPRIATION (ALPHA CODE)	B. PRIMARY PURPOSE CODE	C. PRIMARY TECH. CODE	FY 77 D. GRANT	E. LOAN	FY 78 F. GRANT	G. LOAN	FY 79 H. GRANT	I. LOAN	ALL YEARS J. GRANT	K. LOAN
SA	752 B	873	3,900		4,200		-		8,100	
TOTALS			3,900		4,200		-		8,100	
12. ESTIMATED EXPENDITURES			2,200		4,500		1,400			

13. PROJECT PURPOSE(S) (STAY WITHIN BRACKETS) [X] CHECK IF DIFFERENT FROM PID/PRP

To improve the institutional capability of the Egyptian science and technology community to develop and manage research programs to solve priority development problems.

14. WERE CHANGES MADE IN THE PID/PRP FACESHEET DATA NOT INCLUDED ABOVE? IF YES, ATTACH CHANGED PID AND/OR PRP FACESHEET.
[ ] YES [X] NO

15. ORIGINATING OFFICE CLEARANCE

SIGNATURE

TITLE Director, USAID/Egypt

DATE SIGNED MO. DAY YR.

16. DATE RECEIVED IN AID/W, OR FOR AID/W DOCUMENTS, DATE OF DISTRIBUTION MO. DAY YR.

AID 1330-4 (5-75)

B. Recommendations

Grant	$ 8,100,000
TOTAL - New AID Obligations	$ 8,100,000
Allocation of LE 760,000 excess currency: dollar equivalent	1,368,000
TOTAL - U.S. Resources	$ 9,468,000

See Annex H for a detailed description of the uses of these funds. Converted here at the LE 1.00 equals $1,80 rate used by the U. S. Treasury.

C. DESCRIPTION OF PROJECT

1. This Project Paper describes the first phase of a longer term effort whose objective is to improve the effectiveness of Egyptian scientific and technological resources in applied research directed toward national development goals. The first phase is aimed at improving the management of applied research, and is preparatory to a more comprehensive follow-on to be designed during the implementation of this project. Working through the Academy of Scientific Research and Technology (ASRT), including the research councils, centers and institutes associated with it, especially the National Research Center (NRC), the project will pave the way for making scientific and technological research significantly more responsive than at present to (a) end-users and (b) national development goals.

2. A number of constraints limit the utilization of scientific and technological institutions and personnel in more effective ways to solve developmental problems.

- shortage of policy, planning and management skills for the selection, staffing, and monitoring of projects;
- limited experience with advanced research management techniques for large-scale interdisciplinary efforts;
- lack of key items of research equipment for use in applied research and demonstration projects and methods by which equipment can be procured, utilized and maintained;
- weak incentives for research personnel and institutions to devote sustained effort to applied research projects;
- paucity of quickly accessible scientific and technological information.

Each of these constraints will be addressed in the project.

3. Project Components - The two-year project, for which $8.10 million and LE 0.76 million are requested, will consist of six components:

a. Policy Planning and Management;

b. Research Project Support;

c. Demonstration Project Support;

d. Provision of Scientific Equipment;

e. Science and Technical Information; and

f. Planning for Phase II.

Each of these is discussed below and a detailed budget provided in Annex H.

a. Policy Planning and Management

(i) Technical Assistance: In order to assist both ASRT and NRC in policy and program planning, economic analysis, evaluation techniques, and the management of multi-disciplinary research projects, high level advisors will be provided to both institutions for the life of the project. The long-term advisors will be supplemented by consulting teams over the life of the project for periods of about two months each.

(ii) Training: The training of selected Egyptian staff in both Egypt and the United States will parallel the technical assistance provided. In addition to management and policy planning, this training will emcompass such specialized needs as selection and management of scientific personnel and equipment, and the linking of research to practical end-use.

b. Research Project Support

A key element in the initial phase will be the selection of about five research and development projects as a practical vehicle with which the Academy can test its ability to stimulate selected research projects related to critical national needs, and to provide guidance and evaluation as the projects unfold. These projects will be undertaken by research institutes, universities, and/or other agencies with agricultural, industrial, economic or social concerns. As defined by the Academy, these may include:

- plant production and protection;
- animal research and fisheries;
- soil and water resources;
- environmental research;
- medical research;
- building technology
- industrial research;

- petroleum and mineral resources;
- energy research;
- transportation research; and
- physics and electronic applications.

One or more of the projects will be selected during the first three months of A.I.D. assistance (see Annex I for an illustrative list of sub-projects). Others will follow during the first year. These key projects are expected to a) produce concrete research results which will point the way to improved management procedures and b) demonstrate the role which the Academy can play in stimulating and assisting universities, research institutions and end-users to solve high priority development problems through applied research.

c. Demonstration Project Support

On an even larger scale, involving a number of disciplines and a variety of tasks, two large-scale "demonstration projects," geared to the solution of critical Egyptian development problems, will involve a substantial interdisciplinary effort and the mobilization of a variety of scientific talents and institutions.

The first project will be carried out by NRC and associated research groups, and will involve food technology. Entitled "More and Better Food," (see Annex B, Part 2), the project will be assigned special laboratories in the ample facilities of NRC, particularly for the investigation of the nutritional value of selected foodstuffs. During the laboratory stage, there will be continous collaboration with relevant ministries, a "demonstration village" will have been chosen and by the end of the project work begun with needed inputs from research groups, universities, and village leaders for optimum use of resources in the whole chain of production, harvesting, preservation, storage and marketing of local agricultural products.

The second demonstration project is to be selected and designed with the help of U.S. consulting teams during the first year and will be initiated by research groups other than NRC. Like the research projects described in (b), the demonstration projects are to provide explicit frameworks within which managerial and technical training and experience can take place, and through which the Academy can develop recognition of its role as coordinator and stimulator among research and user communities.

d. Provision of Scientific Equipment

A.I.D. will provide funds for the updating of scientific instruments and equipment in NRC and other research institutions undertaking applied research under Academy support, which will be used to support the research and demonstration projects referred to above, and will provide a base which can serve for other projects in the future. Operation and maintenance personnel will be trained as needed.

e. Scientific and Technical Information

Upgrading of scientific and technical information services to meet the information needs of the Egyptian scientific and technical community will start under this project. A network of services will be developed that will link the ASRT, the NRC, universities, research institutes, industrial enterprises and other entities requiring use of scientific and technical information. The National Information and Documentation Center (NIDOC) of the ASRT will play a key role in the establishment and operation of such a national network of services. A.I.D., in cooperation with the U.S. National Science Foundation, will support the first phase of a long term program which will include the following elements:

1) design of nationwide network;

2) initial arrangements for providing access to U.S. computerized scientific and engineering data bases;

3) supply of needed current scientific and technical information with related equipment; and

4) training of key information personnel.

The design activity will provide a detailed design for long term development of a nationwide Egyptian scientific and technical information network. It will include specifications for use of appropriate technology and a schedule for step-by-step implementation. In addition, three other activities will be slanted to stimulate short-term improvements in Egyptian capabilities to apply information support of its research activities. One will introduce computer-based information retrieval methods in support of research. The second will provide priority basic and applied research journals and reports for building up the Egyptian S&T information base. The third is designed to begin training Egyptian information personnel so that they can use the new information and technology effectively in support of researchers. All projects will be managed by U.S. information scientists, who will work with Egyptian institutions and personnel in the field.

f. During the second year of the project, the second phase program will be defined in detail.

4. Funding

A.I.D. funding requirements for the project have been projected at $8.1 million and LE 760,000; counterpart contributions (from ASRT and NRC) have been calculated at LE 1,495,500. AID assistance will be provided as follows:

	$ (000)	LE (000)
Technical Salaries	1,571.8	272.1
Training	1,105.3	84.7
Equipment	4,835.0	-
Other Costs	380.0	381.1
Contingencies	207.9	22.1
Total	8,100.0	760.0

5. Organization

The prime contractor will provide a channel for the administration of the program, some aspects of which will be subcontracted. (The Mission will, of course, have a project manager assigned to this activity.) To provide for the joint articulation of program policies and for periodic examination of research progress, a "Joint Consultative Committee" will be established. The National Science Foundation, working with NIDOC, the information arm of ASRT, will handle the science and information component of the project.

D. SUMMARY FINDINGS

1. The demonstration and research projects chosen on the basis of national development priorities and other agreed criteria will provide a specific framework within which policy planning, managerial and technical skills, can be honed by technical assistance and training. The acquisition of and training in the use of maintenance of equipment is a particularly vital part of this equation. Because of the scarcity of hard ucrrency, the Egyptians have not been able to replace run down or outmoded equipment which has been in place

since the fifties and sixties; this is a crucial lack which affects the quality of research and limits the speed and accuracy of findings.

A similar block to advanced research and the upgrading of Egypt's large supply of well-trained scientists and engineers is the incomplete store of scientific documents and journals, particularly from the West, and the lack of a quickly accessible information system. Taking advantage of two years of U.S.-Egyptian cooperation through NSF, some ongoing information projects, and a dynamic new chief for NIDOC, the Academy's information arm, the information component of this project is expected to accomplish the necessary first steps toward a truly national information network which can serve development goals.

Some specific projects undertaken will yield research results during the project, but most will continue on into or beyond the second phase before there can be significant application to specific problem areas.

The criteria for selection of A.I.D.-financed projects will be jointly defined by Egyptian and U.S. advisors and teams. It will require interaction between ASRT administrators, research institute directors and potential users. Hewing to agreed criteria is not a simple task for ASRT executives since they must take into account the considerable pressures which capable strong-minded directors of individual institutes can bring to bear in support of their own legitimate, but perhaps not priority, projects. The criteria should include such factors as:

- relevance to national development priorities;
- extent of national commitment and support;
- assurances of follow-on by user community;
- multidisciplinary participation;
- cooperation between different research institutions;
- appropriateness of technology;
- potential for improving career status of research workers;
- impact on environment;
- assurance of non-duplication; and
- influence on other research (spread effect).

The ASRT is Egypt's highest autonomous body responsible for science and technology. Organized into 14 specialized Research Councils, with supporting committees, the Academy represents all of Egypt's science institutions whether they form part of relevant ministries, universities, research institutes or public and private enterprises.

The NRC with 14 research branches is the largest research organization in the country and enlists the services of some 1,800 scientists. With the proper equipment, incentives, and management, both associated groups have enormous potential to contribute to the economic and social development of the GOE.

2. The project meets all applicable statutory criteria. The country has the capability to effectively utilize the assistance given under this project.

PART II - Background and Detailed Description

A. Background

1. Summary of Project Development

Since the reactivation of U.S. foreign assistance to Egypt, there has been a steady dialogue between Egyptian and American scientists through various Joint Working Groups, university connections, and the normal transfer of technology which takes place under AID supported sectoral programs in agriculture and other fields.

This activity was originally conceived as an FY 1976 project directed almost exclusively to the provision of the scientific research equipment needed to modernize the science and technology establishment in Egypt. Upon further investigation, however, it became evident that just as important as equipment would be advisory services to improve the management of scientific and technological research so that the pattern of resource allocation could be changed from basic research to applied research and product development.

Andre Colpitts, the Education and Science Officer for NE/TECH, went to Cairo from October to December, 1975 to develop this concept. Colpitts developed a large range of contracts in the Egyptian scientific community and, in response to their concerns, devised a strategy designed to move the technological R&D sector to apply itself to the problems of the potential user of T-R&D results and simultaneously to move industrial and governmental decision-makers and administrators toward acceptance of T-R&D as profitable and necessary input factors for this operation.

A PID prepared by Colpitts was reviewed and approved by a Near East Advisory Committee. Colpitts had, at this early stage, already fixed on preliminary steps, provision of "core equipment," technical assistance in policy planning, project management, etc., which he felt could be implemented through the ASRT and the NRC. In an attempt to define a specific first step, the Research Triangle Institute was given a contract to field a study team in Cairo for three weeks during April-May, 1976.

The team was to:

1) Assess the potential role of the Egyptian scientific and technological community in the development of Egypt.

2) Examine the tentative scope and nature of U.S. AID assistance to this community as perceived by Egyptian and U.S. AID representatives.

3) On the basis of this assessment and examination, draw conclusions and recommendations regarding:

a) the types of assistance that might be properly provided;

b) the magnitude and duration of this assistance:

c) institutional relationships appropriate for such assistance; and

d) other aspects.

The RTI completed their study and submitted their two-volume report to AID in June, 1976.

They recommended a long-term program of assistance to the ASRT and the NRC (minimum five years), the creation of a high-level "Joint Review Committee," a "Reserve Fund" to be disbursed over a ten-year period, technical assistance in management, policy making and associated fields, and an extensive training program.

Andre Colpitts was murdered on May 21, 1976, just as he was about to prepare a draft PP for what was then called the first stage of the program. Program development was disrupted by his sad death. Messrs. James Dalton and Robert Bostick of NE/TECH attempted to breach the gap with a draft PP, which was circulated on June 15th, but admittedly suffered from a lack of on-the-spot liaison with the Egyptian principals. That paper encompassed MIT's unsolicited proposal to work with Cairo University on sectoral planning, an activity later financed separately under a feasibility study grant.

The Dalton-Bostick draft was reviewed, and both the authors and advisory panels felt that further project definition which could only be prepared in the field was needed. Accordingly, James Riley, borrowed from ROCAP, spent six weeks in Cairo in September and October. The Mission asked two members of the original RTI team, as well as an NE/TECH consultant, to return to help prepare materials which could be included in a final PP, scheduled for review in Washington in November.

One component of the project, that dealing with scientific and technical information, has been defined with the help of the National Science Foundation, which for the past two years has taken the lead on the U. S. side of the Science and Technology Joint Working Group and various sub-committees. The NSF has brought to Egypt a number of professional consultants, and, in a high-level joint meeting in November, reached agreement with ASRT that its National Information and Documentation Center (NIDOC) should be a focal point for steps leading to a national S&T information network.

2. Development Strategy Required

Egypt's population is estimated to have been 36.4 million at mid-1974 and growing at the rate of 2.2 per cent to 2.5 per cent annually. About 800,000 more people a year are born on the narrow strip of land along the Nile Valley and around the Delta, the most densely populated area in the world. Cultivated area per capita has been falling for at least the last 75 years. Increasing rural congestion has spawned an increasing migration to urban areas. The labor force increases at a faster rate than the population and urban migration has caused a shift in employment from the formerly more absorbent agricultural sector to the less elastic industrial and service sectors of an urban economy. Rural congestion, urban crowding, unemployment and underemployment, deteriorating infrastructure, insufficient social services of increasingly poorer quality are only a few of the human problems of Egypt. Increased production and increasing labor productivity are needed to provide employment for a growing labor force, savings for investments and social services, and products and materials for the physical and social welfare of a fast-growing population.

To provide for the needs of its growing population, Egypt must devise an economic growth strategy which can produce yearly growth rates of 6-8 per cent. In the Egyptian context such a high growth rate can come only from industrialization aimed at import substitution and production for export markets; and creation of a type of infrastructure which stimulates the introduction of technology that increases productivity and at the same time conforms to the conditions and needs of Egypt.

3. Advantages to be Exploited

A development strategy based in large part on technological modernization will exploit the several potential development advantages which are available for Egypt's economic growth: human resources, favorable market position, and a large, relatively well-advanced resource and industrial base. Specifically, these include:

1) A large domestic market, abundant low wage labor and a pool of high-level manpower such as engineers, agriculturalists, and educators who have some experience with modern techniques and managerial methods.

2) Egypt is related to other Arab markets not only by geographic proximity but also by a web of cultural, political, and intellectual influences. Given the relatively more advanced state of industrialization and the size and skill levels of her manpower, Egypt has opportunities to provide industrial exports to neighboring Arab markets, to attract Arab investment, and to provide an industrial base for foreign firms seeking access to Arab and African markets. Likewise, the economics of plant location, combined with the intellectual and technical influence derived from a long-term policy of association with African governments and universities, give Egypt a certain comparative advantage vis-a-vis African markets.

3) A large agricultural sector provides food and fiber for traditional industries. Natural materials feed local chemical industries and the construction trade. Completion of iron and steel plant expansion and the aluminum plant now under construction will provide substantial capacity in basic metallurgical production to feed a growing engineering goods industry. Gross value of manufacturing output totalled over $2.6 billion in 1973 and employed over one million workers.

4. Limits upon Technological Innovation

These potentials for development will not be fully realized unless large investments are made and the rate of technological innovation increased. Structural changes are also needed in economic planning, including the system for deciding resource allocation and the management of public enterprises.

The rate of technological innovation has been limited by many factors:

1) Much of the foreign currency financing that has been made available to Egypt for imports has been in terms of bilateral trade agreements or "tied" purchases that restrict choices of technologies and rationalizations of plant processes.

2) Many of the pricing policies and administrative regulations governing public sector enterprises are not conducive to innovation. For example, factor costs are not truly valued and the appropriateness of a technology is often determined by a relatively cheap price for capital and foreign exchange. Price policies and subsidized production frequently combine to discourage innovative change. There is little competition among producers: even in their export items Egyptian industry is spared harsh comparison with international standards because most of their manufactured products are sent to Eastern European markets where the quality of Egyptian goods is quite acceptable.

3) When selecting and adapting a new technology for Egypt, there is scant up-to-date information about available technologies and processes. Large technical and economic disparities exist between supplying firms and Egyptian buyers, thus making rational choice, competent adaptation and complete installation of the desired technology a chancy affair. Few indigenous technological centers are willing to do adaptive research and development work for industry and few industries call upon them to do so.

4) Perhaps the most important constraint to more rapid technological innovation is that the highly theoretical education and academic basic science research orientation of Egyptian scientists and technologists is a poor match for the low level of technological sophistication and practical research needs of local enterprises.

5) At the level of production/service units, managerial and technical competence to implement new technologies is often in short supply. It is a case of too few foremen, supervisors, front-line operators and other middle-level skills.

5. The Critical Factors

From this review, it is obvious that in Egypt, as in other developing countries, the use of technology for economic and social development is not constrained by an absence of appropriate scientific and technological knowledge; rather, the critical limiting factors are those associated with organizational complexities, managerial and technical competence, the system of incentives and regulations governing production decisions in enterprises, and the selection and adaptation of available knowledge. Thus the task of mobilizing Egypt's scientific and technological resources for purposes of development is not simply one of improving scientific quality or building more performance capacity; although there are some important gaps in installed scientific and technological capacities. The task is that of providing a means by which scientific and technological resources can consider a nd interact with the economic, technical, managerial and organizational limitations that combine to determine the rate and extent of technological innovation in industry, the service sectors, agriculture and in other components of the economy.

6. The Problem

There has been established in Egypt over the last 30 years a large and relatively complete structure for scientific and technological research and development. Research and development units exist in universities, technical ministries, the National Research Center, autonomous technical organizations and "captive" labs attached to specific industries such as textiles and petroleum. All essential science service units exist, such as standards and testing labs, information and documentation center, instrumentation repair and maintenance centers, management and productivity centers, natural resource surveys and mapping. There is a superstructure for science policy and planning consisting of a number of scientific ministries and agencies (see Fig. 1). There is also an organization for national research coordination, program control and financing responsible to the Prime Minister -- i.e., the Academy of

Scientific Research and Technology (ASRT). It is difficult to imagine a development concern that can not be located in or attended to by one of the units that already exists in this structure.

The ASRT, established in 1971 as the principal GOE arm for the direction and coordination of science and technology in Egypt, is a non-ministerial body responsible to the Prime Minister which includes 14 research councils, governing the major scientific research categories. Its Board groups the Chancellors of Egypt's principal universities, the directors of the major scientific centers and research institutes, the chairmen of the boards of principal economic enterprises, and Undersecretaries of State of the Ministry of Planning and all other relevant ministries. Its principal mission is precisely to integrate all the scientific, technological and relevant economic and social activity for which science can play a role, to support research directed toward solving priority national problems, encourage the application of modern technology, and to link all relevant organizations and research toward these ends. (See Annex J.)*

The NRC is a large natural-science-oriented government supported research institution with extensive laboratory and office spaces near the center of the city. It has a staff of some 1,800 professionals.

In the past, its research projects have been more basic and academic than applied in nature, closely related to the individual research interests of its senior staff. Its directors are anxious to move toward development-oriented research.

Administratively, NRC reports to the President of ASRT, but it is not a component of the Academy, which nevertheless oversees its programs. (See Annex J.)

The role of the Academy as a catalyst in supporting research and development in relation to national needs is conceptually sound. The alternative of oreinting the scientific and technological community toward applied research by administrative fiat has not been feasible as reported

---

Annex J (Vol. II) gives a full description of the Academy Council, its Advisory Board, its 14 National Research Councils and Principal Committees. Also included are data on projects it now supports, and its relations with other science groups. Significant information on NRC is also included, such as data on current research activities.

by past experience. Based upon observations of various elements of this community, support appears to be growing for the approach taken. Being closely related to central government decision-making, the Academy is in a strategically opportune position to influence decisions of the development process. Yet the Academy is not a "line agency" such as a ministry and, consequently, is better able to maintain continuity in performing the catalytic functions of research and development essential to all elements of government. Recently, it has taken the highly commendable step of adding research "Program Monitors" to its staff as a means of strengthening its ability to perform these functions.

The principal problem is the overwhelming concern of the many research and development units with basic rather than applied research. Engineering design and process development is weak, and most of the structure's output is truncated research and development. That is to say, research and laboratory development is "disconnected" from further activities in the innovation chain, such as engineering design, manufacturing prototype, techno-economic feasibility studies and marketing analysis. Consequently, neither the process nor the product of this very large structure has had much effect on the level of technological content and innovation in industry or in national development plans and programs.

7. The Causes of the Problem

There appear to be several related causes for the weak impact science and technology has had in the past on Egyptian development problems.

1) Until recently R&D activities have not been planned nor funded against the objective of solving specific development problems. Instead, they have been funded from central government budgetary sources on an annual basis -- straight institutional support. There is no mediating technical agency that adequately monitors budget requests for duplication of effort and purchases of equipment, relative balance between elements, or cost-benefit analysis of the distribution of funds. Practically every research unit has some degree of organizational autonomy and, therefore, budget requests are treated singularly, usually with allocations made on the basis of availability of funds and past allotments rather than on merits of work

performed or project objectives. Thus, the research units admit little outside influence on the way in which operational goals are set and resources allocated.

Since most research units have grown up in very close cooperation and association with the universities, the internal organization and reward systems that have evolved in these units are very much like those of the universities. Being professionally autonomous, each researcher decides what work he will pursue and acknowledges only peer judgment as to the "usefulness" of his work. Promotion and wage scales are dictated by university degree and professional standing in the field (meaning publications), etc. With this type of internal arrangement, the research units respond to the orientation of their staffs. In most cases, this means university-trained graduates who are more familiar with the theoretical than the practical due to lack of equipment during university training and due, perhaps, to their own inclination to pursue the rewards of basic research rather than applied research. The result is fragmentation of efforts, orientation toward basic and academic research, and a large number of projects being conducted in accordance with the resources and timeframe of individual laboratories.

2) Research and development is not related to other innovation functions that must be pursued to ensure that results are finally utilized in some production/service process. There is a weakness in the science and technology structure at the level of engineering design and prototype manufacture -- i.e., the pilot project stage where laboratory bench results are tested and modified for actual manufacture and/or operation. Egyptian technologists contend that this "missing link" of the technology innovation chain is the reason why few products are developed to the point of being utilized in local enterprises. They argue that local Egyptian industrialists, managers and administrators refrain from utilizing the product/service of local research and development because they:

a) undervalue the benefits of technological innovation and are not technically conversant with either variants of technology or modern management criteria;

b) are discouraged from innovation by administrative policies and regulations which are basically disincentives;

c) are disparaging of Egyptian technological capabilities and prefer direct import of foreign expertise and technology; and

d) are reluctant to deal with Egyptian research and development units because of past failures with these same units.

Given these attitudes, researchers contend that managers and administrators have to see products and processes in hand, and have hard facts on the economic and technical feasibility of an innovation, before they will invest in its installation or adoption. Therefore, experimental procedures and facilities are needed to reenforce the reputation of Egyptian research and development activities.

3) Two other factors probably explain at least as much about why research and development is truncated at the development phase as does the lack of experimental facilities.

First, laboratory work is only the first phase of technological innovation and it is the cheapest. In the U.S. the relative costs for basic research, applied research and project development are on the order of 1:5:19 -- or percentage ratios of 4 per cent, 20 per cent and 76 per cent. Net investment needed to actually move a project to full production stage is on the order of ten times the total research and development expenditures. The substantial jump in costs from basic and applied research to project development is probably of such a magnitude that action organizations will not move to the development phase unless they are sure that funding is available for later investments.

Second, a lack of coordination and interaction exists between research units and implementing action agencies and enterprises. Given the relative costs of moving a piece of research through its applied and development phases and then into production, the researcher must spend much effort to secure the "development interest" of a final user before the research is undertaken. Contract research, joint industry-laboratory research advisory boards, and in-house research capabilities are only a few of the means by which end-user and research workers can coordinate their actions. All three devices are used in Egypt but with only limited effects.

8. Alternative Solutions

This analysis of the problem suggests several approaches to improving the performance of the research and development sector so that it will be more responsive to the needs of technological modernization. U.S. AID has been presented with requests for assistance representing three of them. They are as follows:

1) The "Education Approach." It was suggested that the research and development community's penchant for basic research results from an emphasis on theoretical training in Egyptian universities. U.S. AID at one point was requested to finance the creation of new "applied" programs in universities. These programs eschewed theoretical orientation, emphasizing experimentation, the use of laboratories, pilot projects and testing facilities, and research on actual problems of industry in situ. They involved curricula changes, large amounts of equipment and facilities, and uncertain commitment on the part of industry to cooperate. Upon review, this solution was felt to be too indirect and long range because:

a) it does not deal with the structure and incentives of the present research and development sector which influence the behavior of the practicing researchers;

b) it would be costly;

c) it involves higher education as a whole, with its many associated problems, and

d) it would involve much more than a concern with the operation and effectiveness of research and development.

2) The "In-House" Solution. This approach seeks to create research and development units for every industry and technical ministry. The cognizant industry/ministry administration would control the unit's performance and provide its budget, thereby assuring that the research work would be directly related to the industry's needs. This approach assumes that industry/government would support the units to their full potential; and that industry administrators would have the management know-how needed for internal research and development activity. It also

assumes that scientists will be willing to accept such "outside" control; in addition, there are many research and development needs which transcend single industry/ministry jurisdictions. The "in-house" solution usually assumes monopoly conditions such as in the petroleum industry or electrification. It does not suit industries composed of many small, perhaps private, plants such as construction or textiles. It also concentrates on building more capacity -- i.e., more research and development units. There is already a surfeit in the country. The question is performance, not capacity. The greatest pay-off for investment will come from the marginal increments that result in the release of the pent-up potential of the already available capacity.

3) The "End-Use Oriented" Solution. An immediate concern of some research units is to become "customer-oriented" in the sense of receiving project purpose and budget from potential outside users of research results. Assistance has been requested in creating an economic analysis and marketing study capability, program management competence, and institutional reorganization of research units. Conversely, industrial and governmental decision-makers and administrators must also move toward acceptance of research and development as a profitable and necessary input to their operations.

This approach appears more feasible than the "educational" and "in-house" solutions because it utilizes the general decision-making structure of both the research and development sector and that of the end-user industries and agencies. The approach concentrates on two areas:

a) providing interaction between program decisions of the research and development sector and investment/expenditure decisions of industry and the development agencies of the government; and

b) through the provision of incentives, encourage sustained concentration of applied research by R&D institutions and personnel.

4) Recommended Course of Action. We have chosen the end-use oriented approach as the one with the highest probability of success and the earlier pay-off in terms of development.

However, it would take a number of years to achieve the overall project goals implicit in an end-use oriented approach and, perhaps, even longer to construct reliable measures of that achievement. Therefore, we have concluded that a two-year transitional period will be needed to test these approaches on a limited-phase basis. During this transitional period, the first priority should be:

a) to improve the capability of the system to orient the scientific and technological research to the solution of developmental problems; and

b) to test ways and means of directing specific research projects toward such solutions.

In order to expand the capability of the Science and Technology community to address major critical development problems, the following steps are envisaged:

-- Expand the expertise of the ASRT in defining objectives, policy planning, selection, staffing, monitoring, and evaluation of projects.

-- Aid NRC and other research institutions to acquire skills for management of large-scale interdisciplinary projects.

-- Increase incentives for research personnel and institutions to concentrate efforts on research leading to the solution of priority development problems. Incentives are needed because:

a) trained people often have to hold multiple jobs in order to compensate for low base salaries;

b) the criteria for advancement are often tied to academic rather than achievement factors; and

c) there is insufficient status and recognition for other than theoretical research.

-- Provide key items of research equipment and associated training to overcome deficiencies which affect the effectiveness of current applied research.

-- Provide missing links in scientific and technological data and the means for quick access to such information. Not only are materials generally available to Western scientists not available to professors and students, but Egyptian scientists are often unable to tap relevant materials from either foreign data banks or their own resource libraries, which themselves have great gaps in scientific documentation.

B. Detailed Project Description

In this section, the major elements of the project are presented within the usual project paper format -- i.e., project goal and purpose, and project output and inputs. By way of introduction, however, it should be noted that the project provides assistance and support to ASRT for the purpose of stimulating and assisting universities, research institutes, government agencies and others in solving high priority development problems through applied research. It also provides assistance to the largest single research institution in Egypt, The National Research Center, to enable it to deal directly with a number of national development problems through applied research.

The project will be carried out through following five closely related implementation paths:

1. The training of selected staff of the Academy, NRC and other research entities in science policy, administration, management, and equipment operation and technical information and technology transfer procedures.

2. The identification by the Academy, in agreement with AID, of important development problems within which accelerated research effort can be applied in Phase I to projects undertaken by NRC, universities, research institutes and/or other agencies. The problem areas agreed upon from which three to five projects will be chosen by the Academy are those applied areas of concern to the Research Councils of the Academy, which include:

-- plant production and protection

-- animal research and fisheries

-- soil and water resources

-- environmental research

-- medical research

-- building technology

-- industrial research

-- petroleum and mineral resources

-- energy research

-- transportation research

-- physics and electronics applications.

Examples of existing and proposed projects within these areas are listed in Annex B.

Selection of one project by the Academy will take place within the first three months of U.S. AID assistance; others will follow during the first year of the project. These projects will:

1) provide the opportunity during this project to produce concrete research results; and

2) provide explicit projects to which training in science management, science administration and use of science information can be related.

3. The up-dating and replacement of scientific instruments and equipment in NRC and in other research institutions supported by the Academy, beginning with selected research and demonstration projects, but also affecting "core" equipment needs. Operation and maintenance personnel for the instrumentation and equipment will be trained as needed.

4. The conceptualization, planning, organization and implementation of initial aspects of two "demonstration projects," each of which will be oriented toward the solution of a critically important Egyptian development problem. The first will be carried out by NRC in the area of food technology and ~~is tentatively~~ entitled "More and Better Food." It will begin with laboratory work at the NRC facility in Cairo and lead to the selection of a "demonstration village" in which production, harvesting, preservation, transportation and marketing of local agricultural products will be investigated. (See Annex B for a description of this subproject.)

The food project and whatever second demonstration project is chosen will be designed to develop economically viable processes which can be adapted by the private and/or public sectors for production and use either by or for lower-income-levels. As with the applied research projects

which are to receive support from the program, the demonstration projects provide concrete research activities in which training in research policy, management and administration can take place.

5. The upgrading of scientific and technical information services to meet the information needs of the Egyptian scientific and technological community. A network of services will be developed that will properly and adequately link the Academy of Scientific Research and Technology, the National Research Center, universities, research institutes, industrial enterprises and other entities requiring use of scientific and technological information for the economic and social advancement of the country. The National Information and Documentation Center (NIDOC) of the ASRT is expected to play a key role in the establishment and operation of such a nationwide network of services. Through the U.S. National Science Foundation, the first phase of a longer term project will be supported to define and design a network of nationwide information services. As part of this project, a system study will be made to develop an action plan to provide immediately the basic S&T information resources (journal literature, monographs, reports, etc.) that are presently unavailable to Egyptian scientists, engineers, research managers and industrial entrepreneurs. It is further expected that within 18 months, among other things, a plan for a nationwide network will have been developed together with appropriate guidelines and a schedule for implementation, which will begin during the initial period, approximately six months after the project has begun.

6. Goal of the Science and Technology Sector

Based upon issues discussed under "background," together with extensive discussions between representatives of the Egyptian and U.S. scientific communities, the long-run goal that this project seeks to help achieve may be expressed as follows:

> To reorient the scientific and technical research community towards those types of research which are of priority importance and are applicable to solving national development problems.

Indicators of Goal Achievement

The Academy of Scientific Research and Technology, as part of its defined functions, contributes to the articulation and implementation of Egyptian science policy. This project will assist the Academy in more effectively performing these science policy functions. To provide indicators of goal achievement, it must be noted that the program is based on the designated role of the Academy of Scientific Research and Technology as the institution with central responsibility for reorienting the scientific and technological community toward "user-oriented" needs. Other institutions such as the National Research Center, the major universities and a number of research institutes have important roles to play as well. The project is designed to provide direct support to the Academy, to NRC and to other institutions through the Academy.

Support will be in the form of technical assistance, provision of scientific and technical equipment, and participant training. But this support will be explicitly related to concrete research programs and projects.

Indicators of goal achievement will be: The initial two years of activity under the project would be a complex program design effort. The only measurement of goal achievement as it relates to the GOE commitment to reorient the scientific and technical research community would be the assessed capability and determination of the GOE to undertake the long term program which will be designed as a result of the first two year effort.

7. Project Purpose and End of Project Status

Whereas the project goal is the general objective of present and future AID activity in science and technology, the purpose of this project is relatively limited:

> To improve the institutional capability of the Egyptian S/T community to develop and manage research programs to solve priority development problems.

Working with research units in a variety of institutional frameworks and in liaison with potential users, ASRT will use AID assistance to:

-- conceptualize research and "demonstration" projects consistent with national developmental needs;

-- contract with appropriate research institutions for the execution of those programs;

-- provide incentives to assure efficient and effective participation by scientists, technicians, and institutions, mainly through the provision of contract fees and equipment;

-- monitor the performance of contracting institutions to ensure execution of research programs consistent with objectives, funding levels and time schedules;

-- help to provide up-to-date technical information to participating institutions;

-- follow-up on research results to ensure that they are applied to actual problems.

To assist the NRC to restructure and redirect its resources and to assist other research organizations throughout the economy to coordinate with NRC to address more efficiently, through applied research, national development priorities, NRC will use AID assistance to:

-- increase the efficiency and effectiveness of multidisciplinary problem-oriented research projects, e.g., "More and Better Food";

-- implement new management control systems;

-- acquire new equipment to be used in its applied research programs;

-- coordinate its programs with those of other research groups and assure proper "end-use."

The above can be stated in a very succinct form to yield indicators that show the purpose of the project has been achieved. In general, the end of project status (EOPS) is given as:

1) Sufficient data will have been made available to design a long term project which will:

a) reorient GOE policies and expenditures toward applied research;

b) provide measurable impact on the solution of key development problems.

2) Long-term project design completed.

Verification of these will not be an easy task. Standard evaluations are not designed to capture and measure the many qualitative factors implicit in the EOPS statement. Therefore, the Mission proposes a special evaluation arrangement using a team of Egyptians and Americans not connected with the day-to-day operations of the project or the Joint Consultative Committee set up as an overview entity. Funding for the group will be provided from the project. The evaluation group will have the mandate of assessing:

Means of Verification

Within two years a survey evaluation will be conducted using a combined team of independent Egyptian-U.S. personnel. They will assess:

a) The extent to which project inputs have resulted in a core of trained personnel who are committed to the concept of reorienting the research community to applied research focused on priority development problems;

b) The ability of the ASRT to act as a coordinating agent to mount interagency and interdisciplinary projects and programs which investigate these development problems;

c) The probable effectiveness and usefulness of the research conducted during the first two years in terms of addressing these problems; and

d) The effectiveness of ASRT to act as a focal point for scientific information in Egypt.

The evaluation group will also be asked to study the design for any follow-on activity and render its opinion as to the adequacy and appropriateness of the design. AID will take their report into consideration in making a decision regarding support to further activities in the field, but it will be only one such input.

In designing this Project, AID has made the assumption that the ASRT and the NRC are the logical institutional entities to undertake the coordination hypothesized to be necessary to an effort to reorient Egyptian scientific and technological research.

3) Project Outputs. The primary outputs will consist of

a) improvements in the qualifications of staff personnel of the Academy, NRC, and other research institutions,

b) an expanded research capability and improvement in the use and maintenance of scientific equipment,

c) a widened and more accessible scientific and technical information system, and

d) tangible results from ongoing research which can be utilized in the solution of specific developmental problems. (See the Logical Framework Matrix in Appendix C.)

More specifically, the outputs in Phase I associated with the Academy and NRC will be as follows:

Academy:

a. The initiation of a significant Academy-supported demonstration project designed to deal with a critically important development problem.

b. Selection of five or more research projects for the solution of priority problems which can serve as models and training vehicles.

c. Installation and effective use of equipment required in the pursuit of the demonstration and research projects.

d. Development of criteria for U.S. AID and Egyptian funds in relation to Academy supported projects.

e. Established procedures, trained personnel, essential equipment and increased use of the scientific and technical information system.

f. Approximately 12 candidates for program monitor positions with the Academy will be trained on-the-job in Egypt and, in some instances, in the U.S. or in other

countries. Upon completion of the training, at least eight will be selected as monitors capable of conceptualizing and developing requests for research program and project proposals, reviewing proposals received from Egyptian research organizations, initiating contracts with the most appropriate institutions, and monitoring the programs and projects until results are obtained and utilized.

g. Approximately 15 potential program managers, project directors and subproject leaders from the institutes, universities and other research organizations receiving Academy support will be trained. The individuals will become (during the course of training) the managers, directors and leaders of research programs, projects and subprojects supported by the Academy. Training will be primarily on-the-job in Egypt in conceptualizing research to be done, preparing proposals, and then executing the research proposed. To a limited extent, some will be provided training outside Egypt if experience to be gained in Egypt is not sufficient to provide adequate guidance. The individuals will work with Academy program monitors, with officials in government ministries and departments, and with potential users of research results in identifying important development problems requiring research, and in developing both the programs of research and plans for research utilization.

h. Clear Academy operating procedures for the initiation of new research programs and the management of on-going programs. The Academy has policies and procedures pertaining to its councils and committees. The reference here is to staff functions required of program monitors in order to make the system of councils and committees more effective. The policies and procedures should aid the integrationof Academy supported research with the research needs arising from development plans and priorities.

National Research Center:

a. The initiation and pursuit of one mission-oriented, multi-disciplinary project consistent with Academy policies and procedures. The title of the project will be "More and Better Food" (see Annex F for details).

b. An effective research and development marketing program servicing the needs of Egyptian industry in particular.

c. Utilization of the national scientific and technological information system including those components appropriate to NRC.

d. Improved management capabilities, including research organization management as well as management of specific research programs and projects. This output pertains to the Office of the Director of NRC, to the major department heads, and to the key people associated with research programs and projects. It will include the primary areas of:

-- policy development and planning,

-- organizational structure and development,

-- formulation and implementation of management control systems,

-- evaluation and evaluating methods.

e. Identification, selection, specifications, procurement transport, installations operation and servicing of equipment and other items considered germane to the development oriented projects of NRC.

8. Output Indicators

1) Academy

a) Restructuring and re-orientation as needed of the existing research supported by the Academy, including specific results from several applied research projects.

b) An important Academy supported demonstration research program properly formulated and effectively under way.

c) Mutually agreed criteria established for selection and funding of research projects.

d) Program monitors trained in place, and functioning as planned.

e) Program managers, project directors and subproject leaders trained, in place in research institutions supported by the Academy, and functioning as planned.

f) Established procedures whereby program monitors, program managers, project directors, and sub-project leaders function in initiating and carrying out Academy-supported development-oriented projects.

2) National Research Center

a) The "More and Better Food" project properly conceived in relation to development needs and being executed effectively.

b) Effective operation of the "user-oriented" research and development program serving the needs of industry and other development-oriented users.

c) Equipment required in relation to development projects procured, in place and being used effectively.

d) Effective use of the scientific and technological information resources.

e) Significant improvements in the organization and management of NRC as evidenced by:

-- management control systems in place and functioning effectively;

-- clearly defined policies and effective planning of NRC activity;

-- properly designed system incentive and disincentive functioning to create high staff morale and effective performance;

-- evaluation methods being applied to determine the effectiveness of research programs and personnel performance.

f) The existence of techno-economic competence within NRC, including staff trained in the social sciences and functioning effectively with other scientists.

3) Scientific and Technical Information System

a) National Plan devised.

b) NIDOC and other information center personnel trained and in place.

c) Information materials inventories and microfiched journals and other documents needed ordered and delivered to NIDOC, universities, research institutes, etc.

d) Access equipment ordered for key centers.

e) Initial links to domestic and foreign data banks in place.

4) The magnitude of outputs is given in the logical framework matrix (Annex C).

9. Project Inputs

Technical assistance, scientific and technical equipment, and participant training are being provided to ASRT and NRC in relation to the six major project implementation paths noted at the beginning of this detailed project description. In view of the central, catalytic role of the Academy, universities, institutes and other research organizations will be assisted indirectly. Inputs are described below by major category and by primary institutional linkage (see also the detailed budget presented as Annex H and Budget Summary on pages 2-24 A and B).

1) Inputs to the Academy and Associated Institutions

a) Advisor to the Academy. This will consist of one fully qualified individual who will work closely with the President, Vice-Presidents, Secretary General, Program Monitors and other senior officials of the Academy and associated research institutions in:

-- Conceptualizing the role of Academy Program Monitors and potential research managers and directors in research institutions supported by the Academy in formulating and executing programs of Academy supported research consistent with national development needs. This will entail developing and/or extending working relations with ministries and departments of A.R.E., with research institutions and with various types of users of research results.

-- Developing new research programs and restructuring existing research programs in line with development objectives. These activities will also serve as on-the-job training vehicles for the monitors and research managers and directors noted above.

BUDGET SUMMARY

		Dollar Budget		
		Year 1	Year 2	Total
1.	Advisor to ASRT	$ 86,000	$ 90,160	$ 176,160
2.	ASRT Consultant Teams	163,190	171,050	334,240
3.	Advisor to NRC	86,000	90,160	176,160
4.	NRC Consultant Teams	269,900	283,020	552,920
5.	Scientific/Technical Equipment	2,000,000	2,500,000	4,500,000
6.	Contract Support to ASRT	-	-	-
7.	ASRT Training in Egypt	91,085	95,125	186,210
8.	ASRT Training in U. S.	156,910	163,470	320,380
9.	NRC Training in Egypt	91,085	95,125	186,210
10.	NRC Training in U. S.	165,480	172,040	337,520
11.	Joint Consultative Committee	41,605	42,380	83,985
12.	U. S. Project Support	139,930	146,075	286,005
13.	National STI Service	473,600	278,710	752,310
14.	Contingencies	135,215	72,685	207,900
	Total	$3,900,000	$4,200,000	$8,100,000

BUDGET SUMMARY

		Egyptian Pound Budget		
		Year 1	Year 2	Total
1.	Advisor to ASRT	17,600	17,100	34,700
2.	ASRT Consultant Teams	21,100	21,100	42,200
3.	Advisor to NRC	17,600	17,100	34,700
4.	NRC Consultant Teams	37,500	37,500	75,000
5.	Scientific/Technical Equipment	-	-	-
6.	Contract Support to ASRT	150,000	200,000	350,000
7.	ASRT Training in Egypt	15,025	15,025	30,050
8.	ASRT Training in U. S.	4,200	4,200	8,400
9.	NRC Training in Egypt	15,025	15,025	30,050
10.	NRC Training in U. S.	5,600	5,600	11,200
11.	Joint Consultative Committee	6,600	6,600	13,200
12.	U. S. Project Support	2,950	2,950	5,900
13.	National STI Service	58,000	44,500	102,500
14.	Contingencies	8,800	13,300	22,100
	Total LE	360,000	400,000	760,000

-- Providing guidance and liaison with appropriate Egyptian and U.S. institutions and agencies in utilizing scientific and technical information services.

-- Providing information and guidance to the Academy and associated institutions in utilizing other components of U.S. AID technical assistance, e.g., training short-term consultant teams.

b) Consultant Teams to the Academy and Associated Institutions. Technical assistance teams will be provided as needed for specific purposes. Members of these teams will be from the U.S. or other appropriate countries. In order to estimate costs, an average of four teams per year, with an average of three members per team spending an average of six weeks in Egypt, is assumed. Alternative combinations within these resource limits are possible and it may not be feasible to field this many teams in the first phase. Among their functions will be the following:

-- Providing advice in formulating and executing research programs, e.g., assurance that research previously conducted in other countries is not being repeated unnecessarily, particularly in the demonstration projects and the selected R&D projects.

-- Assisting in training Academy program monitors and research program managers, directors, technicians, in designing programs, proposing projects, executing research projects, identifying equipment needs, etc.

-- Facilitating the development of communications between the Egyptian scientific and technological community and comparable communities in the U.S. and other countries.

-- Assisting in developing the policies and procedures for equipment purchases, use and maintenance, and other research support.

c) Equipment and Other Research Support. Several constraints inhibit effective pursuit of programs and projects by Academy supported research institutions. Among these are scientific and technical equipment deficiencies and proper work incentives. Equipment is old or non-existent in some cases, and salaries paid many scientists and technicians in

research institutions are so low that many hold more than one position, do private consulting or otherwise enhance their incomes by various means. To ensure performance of Academy funded research consistent with objectives and time schedules, the Academy must be in a position to contract for services in ways that overcome equipment deficiencies, provide adequate income incentives, and impose penalties if performance does not occur according to contractual arrangements.

Funds for equipment, and contractual fees designed to attract scientists into applied research projects will be disbursed after review by the appropriate Research Council and the Joint Egyptian-U.S. Consultative Committee. One of the first tasks of that Committee will be to define mutually agreed criteria, e.g., relevance to national needs, demand by potential user, appropriateness of technology, multi-disciplinary approach, extent of local commitment and contribution, lack of duplication elsewhere, etc. Once there is Egyptian-U.S. agreement, the money will be disbursed through the Academy. (In the case of equipment, A.I.D. through its procurement channels will purchase those items for which hard currency is required.)

d) Training of Academy Associated Staff. Academy associated staff is here defined to include not only individuals directly associated with the Academy, but also those associated with universities, institutes, and other agencies ~~receiving~~ research support from the Academy. In addition to the experience derived from working with consultant teams in formulating and executing projects, explicit training will be provided in Egypt to Academy supported staff. Three 2-week workshops will be held each year of Phase I. Professional consultants from the U.S. or other appropriate countries will provide the necessary inputs. Approximately 20 individuals will participate in each workshop. Subjects covered will be dictated by needs as they arise, but will include such topics as:

-- The requirements of research project formulation, execution and management, using explicit projects as case examples.

-- The operation, maintenance and use of scientific and technical information services.

-- The operation, maintenance and use of specific types of scientific equipment.

-- Evaluation systems, accounting procedures, and reporting requirements essential to effective research management and execution.

-- Specific topics essential to several projects and requiring understanding on the part of several scientists and technicians. For example, the means by which utilization of research may be enhanced is an appropriate topic for a workshop.

In addition to training in Egypt, provision is made for the equivalent of 10 professional or technical staff members per year of the Academy and associated research institutions to spend a maximum of four months each in the United States or other appropriate countries for non-degree, on-the-job training relating to functions in connection with which training in Egypt will not be adequate. For example, highly specialized laboratory equipment may require training in the U.S. before Egyptians will be qualified to install and operate it in Egypt.

2) NRC Program

There are eight principal categories of specific inputs to the NRC which facilitate and make possible the outputs described above. Additionally, NRC shares with the Academy certain common inputs such as assistance in equipment procurement.

a) A well qualified U.S. Advisor will be provided full-time to NRC to coordinate, direct and administer the U.S. support activities to the Egyptian organization. This person will be equipped through extensive, directly relevant experience to afford the wide-ranging assistance and coordination demanded by the support program. His relationship to the Director of NRC is anticipated to be that of a peer, interacting in a dynamic, varied environment characteristic of a major research and development organization seeking to effect fundamental changes in its historic pattern of internal and external relationships and programs. Therefore, his qualifications will include commensurate experience in the development and management of applied research institutions in developing country environments, coupled with the personal characteristics that will facilitate his widely interactive and diversified role.

b) In accord with program goals for strengthening NRC management capabilities, services in the mode of U.S.

type management consulting firms will be provided, largely through the Advisor to NRC. These will comprise:

-- policy development and planning assistance;

-- organization structure and development;

-- formulation and implementation of management control systems;

-- evaluations and evaluation methods.

In addition, the Director, NRC, will be provided orientation and observation opportunities in the U.S. in three to four week visits to appropriate science and technology-oriented organizations during the initial two years of the support program.

c) The experimental program identified as "More and Better Food" will be assisted through provision of technical assistance in conceptualizing the program, preparing an appropriate proposal, conducting the research, evaluating the results, and realizing the optimum application of those results. However, in accord with the objectives of the overall U.S. support program, maximum attention will be given to equipping and training NRC to accomplish such programs, unilaterally, to the greatest feasible extent. Thus, the assistance of the U.S. organization is definitely secondary and supportive, and will in no event seek to substitute for NRC capabilities when these are, or may be, made adequate to the task.

d) For principal NRC management members, four two-week management development programs will be provided by the U.S. organization on site in Egypt. Additionally, NRC staff members will be provided both technical updating and management training programs at selected institutions in the U.S.

e) In addition to support in management and administrative subject areas, scientist/engineer assistance will be required in selected technical subject areas to be determined. Contractor will assist in determination of these needs and will undertake to meet them either through provision of its own staff members, or by recruiting qualified outside individuals and organizations.

f) To meet needs for access to and acquisition of technology appropriate for adaption to the Egyptian environment, the U.S. organization will act as a point of access to U.S. and other sources of technology.

g) To assist NRC in evolving its capability to effectively present its capabilities to potential users and to thereby realize research contracts and commissions (a principal objective), the program will provide both formal and on-the-job training to carefully chosen NRC staff members, in the various aspects of marketing methods appropriate to contract research organizations.

This will include, depending upon developments in the earlier stages of the support program, assistance in the presentation of several seminars for user communities in Egypt. These will typically present some aspects of current technical developments of interest to the user group, with accompanying economic and social-impact analyses as appropriate. This will serve to introduce the NRC capabilities to these groups and to stimulate sponsored research programs.

3) U.S. Based Project Support Inputs

-- Selection of chief contractor or U.S. Coordinator for the group.

-- Recruitment and provision of in-residence Advisors to the Academy and to NRC.

-- Recruitment of the consultant and training teams as required in support of the Academy and NRC programs.

-- Procurement of U.S. equipment required in both Academy and NRC programs.

To provide necessary support activity in the U.S. in performing these functions, one professional individual may be required. Secretarial assistance and funds for travel in the U.S. and to and from Egypt may be needed also.

10. Implementation Targets

The following schedule of significant events in the course of project implementation does not replace the CPI network and description given as Annex D, but rather presents key dates for project management. These implementation targets permit a projection of the completion of financial and technical plans necessary to carry out the project. In effect, these also become key dates for the issuance of implementation documents. Based on this description , the following schedule of implementation is foreseen:

Item	Month
1. Signing of Project Agreement and issuance of PIL for the two arrangements (Prime Contractor and NSF (PASA).	-2

Estimated funding required:

	$	LE
Prime Contractor:	(450,000)	(73,000)
2 long-term advisors	172,000	35,200
1 ASRT Consultant Team	54,377	7,033
1 NRC Consultant Team	89,967	12,500
JCC - First Year	41,605	6,600
1/3 of Training in Egypt	60,723	10,017
Contingencies	31,328	1,650
NSF	(485,000)	(60,000)
National STI Service	473,600	58,000
Contingencies	11,400	2,000
Total	$935,000	LE 133,000

SCHEDULE OF EVENTS

No.	ORG	DATE	PROJECT ACTION
1	--	-2	Project Paper Approved by AID/W
2	--	-1	Project Agreement Signed by USAID Cairo and GOE
3		1	Prime Contractor, NSF participation negotiated
4	ASRT & NRC	2	Prime contractor selects sub-contractor(s) for project
5	NIDOC	2	National Science Foundation (NSF) selects sub-contractor(s) for STI component
6	ASRT	2	Universities, government agencies, private groups, etc., expected to participate are consulted by ASRT
7	ASRT & NRC	2	Advisors selected by NAS or consulting firm
8	ASRT	4	Advisors arrive Cairo
9	&	5	First two consulting teams briefed, sent to Egypt for NRC and ASRT
10	NRC	5	Training in Egypt begun, trainees sent to States for science policy, economic analysis, planning, administration, program management, etc.
11	ASRT	6	First R&D projects selected with participation of advisor, team, approved by AID
12	NIDOC	6	STI design team arrives; materials team also arrives
13	ASRT	6	First R&D equipment ordered
14	NRC	7	Consulting team for first demonstration project (More and Better Food) arrives
15	NRC	7	Equipment ordered for "More and Better Food" project
16	NIDOC	7	Materials team identifies needs
17	--	7	First Meeting Joint Consultative Committee, (JCC)
18	NIDOC	8	Orders placed for STI materials, e.g., microfiches, journals, readers, etc.
19	NIDOC	8	STI training begins
20	ASRT	10	First R&D equipment arrives
21	ASRT	11	Remainder R&D projects selected, underway
22	ASRT	11	Equipment ordered for remainder R&D projects
23	NRC	11	Project design More and Better Food completed
24	NRC	11	Training program More and Better Food begun
25	NRC	12	Equipment More and Better Food project arrives
26		13	Second meet JCC

No.	ORG	Date	Project Action
27	--	13	Project Agreement (2nd year) signed
28	ASRT, NRC &	13	Training program (10) continues
29	ASRT	13	Demonstration Project II designed, training, equipment needs defined
30	NRC &	14	Second two management teams (9) arrive
31	ASRT	14	Demonstration Project II training begun
32	NIDOC	15	STI materials arrive, placed in NIDOC, 5 other centers
33	NRC	16	Core Equipment ordered
34	--	19	Third meeting JCC
35	--	19	Evaluation contract signed
36	NIDOC	21	STI training completed
37	--	21	Evaluation begun
38	NRC	22	Demonstration I training completed
39	ASRT & NRC	23	Management training completed
40	ASRT & NRC	23	Project Managers, Policy Planners, Program Monitors selected and in place
41	NRC	23	Core equipment arrives
42	NRC	23	Deomonstration I project yields data
43	NRC	23	Deomonstration I project (Phase II) project designed
44	--	23	Evaluation completed
45	ASRT & NRC	24	Phase II design completed
46	NIDOC	24	Phase II design STI component completed
47	--	24	Fourth meeting JCC
48	--	27	Phase I completed

Item	Month
2. Departure of first group of two consulting teams from Cairo and issuance of PIL for part of US training and the rest of training in Egypt, basic equipment, second and third groups of two consulting teams and U.S. project support.	5

Estimated Costs:	$	LE
PRIME CONTRACTOR :	(1,750,000)	(67,000)
2 ASRT Consultant Teams	108,813	14,067
2 NRC Consultant Teams	179,933	25,000
2/3 of Training in Egypt	121,447	20,033
1/3 of U.S. Training	108,463	3,267
Basic Equipment	1,000,000	-
U.S. Project Support	139,930	2,950
Contingencies	91,414	1,683
TOTAL	$ 1,750,000	67,000 LE

3. Selection and approval of first research projects and issuance of PIL for part of research project equipment and of contract support	6

Estimated Costs:	$	LE
PRIME CONTRACTOR:	(300,000)	(35,000)
Research project equipment	300,000	-
Contract Support	-	35,000
TOTAL	$ 300,000	35,000 LE

Item	Month
4. Departure of second consulting teams and issuance of PIL for remaining candidates for US training, support to demonstration projects (equipment and contract support)	7

Estimated Costs:	$	LE
PRIME CONTRACTOR:	(915,000)	(105,000)
Remaining US Training	213,927	6,533
Equipment	600,000	-
Contract Support	-	95,000
Contingencies	1,073	3,467
TOTAL	$ 915,000	LE 105,000

5. Departure of third consulting teams, selection and approval of remaining research projects and issuance of PIL for remainder of research equipment and contract support.	11

Estimated Costs:	$	LE
PRIME CONTRACTOR:	(100,000)	(20,000)
Research project equipment	100,000	-
Contract Support	-	20,000
TOTAL	$ 100,000	LE 20,000

6. TOTAL Subobligations during FY 1977: $3,900,000 and LE 36[illegible],000.

Item			Month
7. Signing of Project Agreement and issuance of PIL for second year services under both PASAs, including all project elements except some equipment and contract support.			13
Estimated Cost:	$	LE	
PRIME CONTRACTOR:	(2,800,000)	(250,000)	
2 long-term advisors	180,320	34,200	
JCC - second year	42,380	6,600	
Advisor teams	454,070	58,600	
Training in Egypt	190,250	30,050	
Training in U.S.	335,510	9,800	
U.S. Project Support	146,075	2,950	
Equipment	1,400,000	-	
Contract Support	-	100,000	
Contingencies	51,395	7,800	
NSF:	(300,000)	(50,000)	
National STI Service	278,710	44,500	
Contingencies	21,290	5,500	
TOTAL	$ 3,100,000	300,000	LE

Month

8. First NRC consulting team leaves and issuance of PIL for remaining basic and demonstration project equipment and contract support. 14

Cost Estimate:	$	LE
PRIME CONTRACTOR	(1,100,000)	(100,000)
Equipment	1,100,000	-
Contract Support	-	100,000
TOTAL	$ 1,100,000	100,000 LE

9. Issuance of PIL from FY 1978 agreement completed 15

Total amounts: $4,200,000 and LE 400,000.

PART III - PROJECT ANALYSIS

A. Technical Analysis and Environmental Assessment

1. President Sadat and other Egyptian officials have repeatedly emphasized the importance of science and technology to the developmental concerns of Egypt, and have tied the success of much of Egypt's economic, agricultural and social programs to the development, transfer, and adaptation of technology to specific needs. The appropriateness of such technology bears upon construction patterns, agricultural production decisions, sources and uses of foreign exchange, employment concerns, population, etc. Egypt faces a danger from indiscriminate importation of foreign technology -- the country can become committed to capital-intensive technology or dependence on expensive imported technology which is not adapted to economic factor endowments and real national needs. It is for this reason that a well planned and directed program of science and technology geared to national needs is so important.

As observed by a UNESCO study team in 1974:

"... There is a clear awareness of the role that science and technology can play in helping the solution of pressing economic and social problems, and the need for planning of the related activities, as well as an understanding of the conditions that should be fulfilled if such a role is going to be played. In this connection, the work of the Academy of Scientific Research and Technology ought to be singled out as an example.

The panorama offered now by the Arab Republic of Egypt in the field of science and technology places this country in a position which is certainly exceptional within the so-called developing countries. The country has a large scientific community; the level reached in some disciplines is up to international standards; large sectors of researchers are conscious of their social responsibility and willing to devote their efforts to problems related to the national goal... " [1]

In short, the Egyptian community of science and technology seeks (and, in the view of many, is potentially capable of playing) a leading role in the development of Egypt. People have been trained. An institutional structure is in place. In broad outline, this role is understood by Egyptian leaders. The real test, however, lies in whether this institutional structure and associated talent,

1/ Page 2, UNESCO, Serial No. 3125/Rmg.Rd/Stf. Paris, Feb. 1975.

can indeed perform as expected. This project is designed to assist in the effort and to determine whether such performance is in fact possible. If it is, then Phase II will be undertaken on a larger scale, with emphasis upon achieving significant research results for application to critically important national needs.

3.1.1 Appropriate Technology

The criteria by which ASRT and NRC are to select and implement projects, the kind of equipment chosen, and the relevance of research results to actual needs will be a major concern of the U.S.-Egyptian teams. Their efforts will be directed toward scaling Egyptian research to Egyptian needs and conditions, taking into account the limitations of foreign exchange and other economic factors, as well as social and cultural constraints.

For instance, the organization and operation of agriculture on presently cultivated areas might be reexamined. Many rural villages are becoming net importers of goods and services under emerging techniques, rather than net exporters, especially when account is taken of machinery being introduced. Such substitution of equipment for labor represents, in several instances at least, adoption of foreign technology without examination of the consequences in terms of trade balances and the problem of providing employment for a rapidly growing population. This illustrates the danger Egypt now faces on both the agricultural and industrial fronts -- i.e., the risk of becoming locked into the framework of the wrong technology simply because construction, production, design, organization (the gamut of economic development activity appropriate for other countries) is being adopted rather than carefully adapted to the singular characteristics of Egyptian conditions.

3.1.2 Criteria for Projects

Mutually agreed guidelines for the selection of projects will be set up by the Joint Consultative Committee. These should include such factors as:

a. Relevance to critical national development priorities, e.g., water, land, food, energy, environment, etc. This means close cooperation with ministries and departments, including the planning entities.

b. Extent of GOE commitment in capital and manpower resources, supporting services, etc.

c. Collaboration with and participation by relevant research institutions, active cooperation with ministries, universities, etc.

d. "User" participation in process, so that practical use applications are built into objectives. Research on schistosomiasis, for example, would require follow-up by health officials, and the results of research on building materials would need to be fitted into construction plans.

e. The avoidance of duplication, either within or outside of Egypt. Effect on chain of inter-related science activities, i.e. will it rob Peter to pay Paul?

f. The benefit/cost ratio, e.g., whether or not it is cheaper to make some kinds of computer analysis through subcontracting rather than the purchase of new installations.

g. Multi-disciplinary aspects, e.g., physical and social sciences taken into account.

h. The kind of "feedback" mechanism in place -- how initial results in the field are able to influence the course of work in the laboratory. Implications in terms of follow-on stages; e.g., the development side of R&D.

i. Effect on willingness of professors and other skilled research persons to devote time and/or careers to applied research.

j. Appropriateness of technology affected, e.g., labor-intensive, adaption to local materials, applicability to existing skills, etc.

k. Degree to which project strengthens assigned role of ASRT and NRC.

Research programs and projects will encompass both technical and organizational innovations. To illustrate, solution of problems of water management and agricultural production arising from changing ecological conditions caused by the Aswan Dam will be technical in nature. But improvement in agricultural production, increasing the efficiency of many existing industrial plants, and determining how government employees may work more efficiently and effectively will require organizational innovations.

2. Statement on Environment

As described in the Rules and Regulations, 216.2, Vol. 41, No. 127, June 30, 1976, Federal Register, "Not every AID activity ... will be a major action significantly affecting the human environment for purposes of these procedures. For example, the following general classes of activities will not normally require the filling of an Environmental Impact Statement or the preparation of an Environmental Assessment:

a. Education or training programs not designed to result in activities directly affecting the environment;

b. Controlled experimentation exclusively for the purpose of research which is confined to small areas and carefully monitored;

c. Analyses, studies, academic or investigative research, workshops and meetings;

d. Projects where AID is a minor donor to a multi-donor project and there are no potential effects upon the environment of the U.S. or areas outside the nation's jurisdiction;

e. Document and information transfers."

Since Phase I of the project falls within the scope of the above categories, the requirement for an environmental impact statement or an environmental assessment does not apply at this time. However, as each sub-activity of the project goes forward, the environmental effects of that sub-activity, be it a specific research project or a demonstration project, would be one of the criteria considered in selection and design. There is no way that such assessments, when necessary, can be made in advance of the approval of this PP.

3. Statement on Women

Perhaps more than other institutions, the scientific establishment provides an unfettered outlet for the skills of trained women. On the whole, women are able to attain professional status with fewer obstacles related to their sex.

The principal organizations with whom this project deals, the Academy, and the NRC, have women in both executive and professional capacities.

On this higher level, therefore, AID projects can have only a minor effect on the status of women. The real barrier to advancement for the majority of women is 80 percent illiteracy, a tradition of early marriage, and a birth control system which has not adequately slowed the production of children.

As a matter of national policy and attitude, Mrs. Jihan El Sadat, wife of President Anwar Sadat, was quoted recently as stating the "Egyptian women's status is ahead of the United Nations itself with regard to the application of the principles which were stressed during International Women's Year". (The Egyptian Gazette, October 18, 1976, p. 1).

B. Financial Analysis and Plan

Table III-B-1 gives a cost summary, in dollars and Egyptian pounds, of the various AID provided elements of the project. Annex H provides detailed calculations in support of the table.

Table III-B-2, Summary Cost Estimate and Financial Plan, shows AID and GOE inputs split into object class categories. Table III-B-3, Costing of Project Outputs/Inputs, shows inputs allocated to specific project outputs. The GOE input figures for these two tables were derived from the following data:

TABLE III-B-4

GOE INPUTS
(LE 000)

Outputs/Use	Tech. Salaries	Training*	Equipment	Other‡	Total
1. Trained Personnel	54	-	5	31	90
2. Research Projects	352	-	75	328	755
3. Demonstration Projects	287	-	36	237	600
4. STI System	30	-	5	15	50
TOTAL	703	-	181	611	1495

* Included in technical salaries.

‡ Mainly administrative and support salaries and overhead items.

TABLE III-B-2

Summary Cost Estimate and Financial Plan

($000 or LE 000)

Project 263-0016
Applied Science and
Technology Research
PROJECT PAPER

Source	Dollar Grant AID	Local Currency AID	Local Currency GOE*	Local Currency Total
Use				
Technical Salaries	1,571.8	272.1	703.0	975.1
Training	1,105.3	84.7	**	84.7
Equipment	4,835.0	-	181.0	181.0
Other Costs	380.0	381.1	611.0	992.1
Contingencies	207.9	22.1	-	22.1
TOTAL	$ 8,100.0	LE 760.0	LE 1,495.0	LE 2,255.0

* Estimated. Does not include data for Institutions other than ASRT and NRC.

** Included in Technical Salaries.

TABLE III-B-3

Costing of Project Outputs/Inputs

($000 or LE 000)

Project 263-0016
Applied Science and
Technology Research
PROJECT PAPER

Project Inputs	Project Outputs				
	1. Trained Personnel	2. Research Projects	3. Demonstration Projects	4. Information System	TOTAL
AID - Dollar Grant	$ 1,466.6	$ 3,275.8	$ 2,605.3	$ 752.3	$ 8,100.0
AID - Local Currency	LE 162.3	LE 275.8	LE 219.4	LE 102.5	LE 760.0
Host Country*	LE 90.0	LE 755.0	LE 600.0	LE 50.0	LE 1,495.0
Total - Dollars	$ 1,382.6	$ 3,275.8	$ 2,605.3	$ 752.3	$ 8,100.0
- Egyptian Pounds	LE 252.3	LE 1,030.8	LE 819.4	LE 152.5	LE 2,255.0

* Does not include expenditures by institutions other than ASRT and NRC.

The above data included only projected cash expenditures by the ASRT and the NRC in support of the project and exclude the value of inputs by other research organizations involved in the project. They were calculated conservatively in that they include only those elements of the ASRT and NRC directly affected by AID inputs (working as counterparts to US consultant teams, for example). They nevertheless signify a major commitment on the part of the GOE as can be seen in Table III-B-5, which shows the total 1976-77 budgets of the ASRT and the NRC.

TABLE III-B-5

COOPERATING INSTITUTION BUDGETS
(LE, 1976 and 1977)

		1976		1977 2/	
		Academy	N R C	Academy	N R C
I.	Salaries	2,773,300	1,750,600	2,900,000	2,000,000
II.	Operating Expenses	1,130,300	605,000	1,200,000	650,000
III.	Research 1/	2,113,000	600,000	4,250,000	1,100,000
	TOTAL	6,016,600	2,955,600	8,350,000	3,750,000

1/ Mainly equipment and supplies. Salaries for researchers are included in I Salaries.

2/ Budget request

Although the requirement contained in Section 110(a) of the FAA that the cooperating country contribute at least 25 percent of project costs does not apply to funds made available under Security Supporting Assistance, a contribution of at least 19.3 percent can be shown for this project. It can vary up to 27.6 percent, depending on which quoted exchange rate used. Adjusting the low professional salaries paid to researchers in the project to international levels (a shadow exchange rate) would show a contribution of 46.4 percent of total project costs.

I.	Nominal Contributions	
	A. AID contributions ($ 000)	$ 8,100.0
	B. AID contribution (LE 000)	LE 760.0
	C. GOE contribution (LE 000)	1,495.0
II.	Official Exchange Rate (LE 1.000 = $ 2.56)	
	A. AID contribution ($ 000)	8,100.0
	B. Value of AID LE contribution	1,945.6
	C. Subtotal	10,045.6
	D. Value of GOE LE contribution	3,827.2
	E. TOTAL	13,872.8
	E. D as percent of E	27.6 %
III.	Parallel Exchange Rate (LE 1.000 = $ 1.47)	
	A. AID Dollar Contribution	$ 8,100.00
	B. Value of AID LE contribution	1,117.20
	C. Subtotal	9,217.20
	D. Value of GOE LE contribution	2,197.65
	E. TOTAL	11,414.85
	F. D as percent of E	19.3 %

IV. GOE Salaries Adjusted/Parallel Rate

A.	AID Dollar contribution	$ 8,100.0
B.	Value of AID LE contribution	1,117.2
C.	Subtotal	9,217.2
D.	Value of GOE LE contribution	7,992.4
E.	TOTAL	17,209.6
F.	D as percent of E.	46.4 %

C. Social Analysis

1. Assuming the scientific and technological community can in fact demonstrate, in Phase I, its ability to carry out research consistent with Egyptian development goals and plans, the following conclusions may be drawn regarding the effect upon Egyptian society:

a. The project is compatible with the social and cultural environment of Egypt.

b. There is an expectation that innovations developed will be diffused throughout the society. In fact, ensuring the utilization of results is an important aspect of the project.

c. Benefits will be widespread. Research will be oriented toward appropriate technology and the intent is to improve the welfare of all Egyptians, not simply a select few.

d. The institutions expected to participate in and which can potentially be affected by the project include not only the ASRT, and NRC, and their councils, committees, and research grantees, but a whole gamut of organizations connected to science and technology, ranging from 12 universities, a number of ministries, departments and agencies, and many specialized research institutes, and the industrial and agricultural organizations of Egypt. More specifically, there are approximately 20,000 Egyptians holding doctoral and master of science degrees from Egyptian and foreign universities, and currently active in Egypt. Also vital to research are a number of the 200,000 receipients of bachelors degrees now active in Egypt, as well as the laboratory and other technicians who must back-up the degree-holders.

From the above, the following is a rough estimate of the number of scientists who may be affected in varying degrees by this program:

Number of scientists in Academy	60
Number of scientists in Academy related institutes, excluding NRC	1,100
Number of scientists in NRC	1,800
Sub-Total	2,960

Number of scientists in universities and government agencies potentially related to program	1,000
Total potential number of scientists affected by Program in Science and Technology	3,960
Total (rounded)	4,000

Note that these individuals will not all be caught up directly in research programs supported by the program in Phase I. It is anticipated, however, that at least this many will be influenced directly or indirectly by the U.S. AID project inputs designed to improve institutional organization and management and information resources, and to significantly alter the rate and effectiveness of research project implementations.

In addition to the approximately 4,000 scientists affected, another equal number of laboratory technicians, supervisors and other technologists will be affected. Annual salaries, including allowances, for scientists and technologists range, in U.S. dollar equivalents, from perhaps $600 to $4,000. Assuming an average of $2,000 per year, total salaries paid by GOE to the 8,000 scientists and technologists who would be directly or indirectly related to the program in Phase I would be $16,000,000. The annual value of office space, such equipment as now exists, and other items could easily increase this figure to $20 million. The total for two years could reach $40 million. Thus, the fact that Egypt has a trained corps of scientists and technologists and an established institutional structure means that GOE will be contributing significantly more to the program than the U.S. AID contribution. Even if the above estimates are reduced substantially for Phase I, the Egyptian contribution will still exceed the U.S. share.

2. To date, no major surveys or studies have been mounted concerning direct assessment of Egyptian public opinion about the importance and potential of scientific knowledge and technology in Egypt. Prominent Egyptian political leaders, like President Sadat, have consistently remarked upon that importance.

> "...We must have a State consecrating all that modern science has achieved for the benefit of society. More than any other nation we have no hope but in modern science..." *

* Programme for National Action, Cairo, Ministry of Information, 1971.

There are some indications of public opinion about this subject. Surveys focused on other subjects, and yet tangentially reflecting possible public attitudes related to science and technology have been done by the American University, Cairo. These show that public opinion, as a whole, is indifferent to questions of the importance or future of science and technology in Egypt. Respondents from relatively high socio-economic groups indicate more positive attitudes about the possible future potential of science and technology for the development of Egypt.

These respondents--when younger--view that potential in highly personal terms. They cite opportunities for personal prestige, upward social mobility, and increased personal income in their perceived hopes for the future of science and technology as a vehicle of Egyptian development. The education decisions of the younger people in the more advanced socio-economic classes are already reflecting this interest. While graduate training in medicine outranks everything else except the social sciences, study of the basic sciences runs a close second to medicine. Recent announcements of the Ministry of Higher Education that it is to support 2,000 Ph.D. training programs abroad in 500 different specializations adds a further boost in interest in this area. Particularly so, since more than 50 percent of the programs are to involve training in science and technology.

The existing Egyptian academic training system for research, as well as the utilization of trained talent, does produce results. As noted by a recent UNESCO team:

> "...It is immediately apparent, even on a first quick examination like the present, that the A.R.E. has at its disposal an elite cadre of first-rate scientists who publish in a wide range of scientific subjects. In quality, they rank on the world scale, and in quantity they seem to be approximately as numerous as one might expect from a country of this economic size...The A.R.E. has about 0.2 percent of the world's scientific authors, which compares reasonably with its having roughtly 0.25 percent of the world's Gross National Product. It is thus approximately the same scientific and economic size as such countries as New Zealand, Yugoslavia, Brazil, and Spain..."*

Current trends concerning Egyptian participation in the international research community likewise reinforce the idea that prestige, involvement, and advancement can be obtained through a scientific or technological research

---

* UNESCO Reports, Sept. 1972, Paris, Page 6.

career. Presently, more than 500 Egyptian scientists and technologists are serving in United Nations and World Bank development assistance activities. Another 600 are said to be serving abroad as teachers and researchers among higher institutions of learning in various parts of the Middle East and Africa.

The founding and evolution of the Joint U.S. Egyptian Working Group for Technology, Research and Development has also led to an acceleration of exchanges, workshops, seminars, and projects as between American and Egyptian scientists and technologists.

Despite various augeries for the future, there remains the fact that Egyptian research and technological development still is dominated by an older and elite leadershop, and that stress continues on disciplinary-oriented research in which systematic consideration is not given to broader user-need issues. As observed by an UNESCO team:

> "... As in many countries that have undergone considerable social and political change, there tends to be a gap between young and old scientists in the A.R.E. In particular, it seems essential to pay attention to the closing of the gap between the older scientists trained abroad, and the young growing up in the new conditions... We can only point to the essential democracy of the scientific establishment and express a hope that the leadership will make every effort to involve new and junior scientists with the process of forming a well-knit community rather than a gerontocracy or meritocracy..."*

Several teams visiting Egypt over the past years have noted that there are many functional gaps between research and development organizations and potential users--whether they be commercial, potential-investor, or public-demain users. Many cases exist where, for example, commerical users have the capability of identifying their needs and using results. But interaction between the "doer" and the "user" is limited: as a consequence, research organizations are making little or not contribution and the problem persists.

This proposed project, in dealing with the subject of user needs and the marketing of research development, is addressed to an issue which affects the interests of all prospective participants in scientific and technological research in

---

* UNESCO Report, Sept. 1972, Paris, Page 8

Egypt. To make that research more meaningful and useful in a modernizing context implies mobilization of young and old Egyptian scientists as well as a teaming up of policy-makers with advisors drawn from countries where the community of research users has long been a matter of sustained interest. As described in the Research Triangle Institute Report (Vol. 1, Page 16), this community comprises:

> "...(1) those in research who interact with each other in identifying problems and in designing research programs and projects (initial users of prior knowledge who create new knowledge), (2) those who adopt the new knowledge, develop it further and put it to work (intermediate users), and (3) those whose lives are subsequently affected by the impact of the new knowledge (final Users) ..."

The potential spread effect of touching all those possible users is incalculable. Within the scientific and technological community alone, it can be confidently assumed that an initial Phase I effort could produce additional Egyptian interest in the whole subject, a reduction in the current gap between young and old scientists in Egypt, and meaningful Egyptian communication with interested and knowledgeable scientists and technologists in other lands.

D. Economic Analysis

1. While there is some theoretical controversy about the exact benefit-cost return from applied research, most economists feel that in industry, for example, technical progress is an essentially continuous innovative chain linking scientific and associated research through development design, tooling, production and marketing of the end product. On this basis, R&D is usually only the smallest of the investments needed for completion of the whole chain.

Government R&D moreover, is most often concentrated on public interest objectives, such as protecting air, water, or land, improvement of water systems, etc. and cannot be measured in purely commercial terms. In addition, the concerns of civil servants or government agencies, and not necessarily prospective economic returns, become a major factor in how R&D is planned and operated. There are nevertheless economic benefits to be accrued in terms of building agricultural and other infrastructure, and in avoiding the hidden costs or

"externalities" which the extraction of resources and other economic activities exact in terms of alteration of the environment or the social structure.

2. The furthest extension of this situation occurs in those countries where private enterpreneuial interests have been replaced by state enterprise, such as Eastern Europe and the Soviet Union. In those circumstances, responsibility for all planning falls upon government. In practice, insufficient resources are put into development compared to those put into research. The main bottleneck in such countries is usually the relative unavailability of facilities for manufacturing and proving prototypes.

3. Among developing countires somewhat similar conditions often exist. The indigenous entrepreneurial class is weak or non-existent in a state-dominated sector. Hence, market mechanisms are inadequate and innovation depends on government intervention in planning and research. The problem under such circumstances is complex. Its successful solution implies a need not for just a policy for scientific research, but also for developing and making best use of the entire national scientific and technological potential in a two-way interaction with economic and social planning. In such circumstances, more research may be less important and far more expensive than concentrating attention on strengthening supporting service activities, and raising the general level of productive competence.

4. In addition to such concentration, the objective in R&D work should be to improve and adapt indigenous or imported technologies and increase efficiencies in the use of resources. The stress has to be upon efficient capital-saving and labor-utilizing techniques. Under such circumstances, public sector-oriented R&D, except in the context of special problems (for example, those confronting the labor force), has to be foregone or carefully limited. Hence, in a country like Egypt, it is probable that an economic case can be made for extensive R&D work on the control of Bilharzia, but not on cancer.

5. Whether current Egyptian R&D planning and activities operate according to such principles is a moot point. A UNESCO team estimates that somewhere between 0.2 percent and one percent of Egyptian GNP annually supports R&D activities. Thus, from $19 million to $93 million is devoted to R&D work in the physical sciences, natural sciences, applied technology, natural resources, health sciences, and food technology/processing areas. This level of expenditure would certainly seem to justify emphasis on optimization of investments made in this area.

6. The project proposes to focus on management/planning matters related to optimization of resource inputs. Just how cost effective such an optimization effort might be is speculation at this point. It is probable that upon completion of management, planning, and evaluation activities in this project, we will have data which permit less speculative future projections.

PART IV

Implementation Arrangements

A. 1. Recipients:

a) The key organizations that are to implement the project on the Egyptian side are the ASRT and the NRC. These institutions, in turn, will be associated with other science and technology institutions--e.g., universities, institutes, industrial and agricultural groups, and government agencies--in pursuing development-oriented research. The National Documentation and Information Center (NIDOC), the information arm of ASRT, will be the focal point for the information component of the project.

b) On the American side, the Prime Contractor will provide the link for the ASRT to the U.S. science community, and will sub-contract as needed for specific implementation tasks. The National Science Foundation will perform a similar function for the information component of the project.

2. The Joint Consultative Committee

Day-to-day management of the program will be carried out by Egyptian and U.S. representatives attached to the project. To provide for joint articulation of program policies, to set goals, and periodically review results obtained, a Joint Consultative Committee will be established with three U.S. members chosen by the U.S. Academy of Sciences, and three Egyptian members who will represent the user community.

The functions of the Joint Consultative Committee are:

1. To meet initially and review the policies in terms of which the program is to function and outline the procedures to follow in conducting periodic reviews.

2. To meet at approximately six-months intervals to review accomplishments of the preceding period and plans for the coming year, and determine the extent to which operations are consistent with the goal.

3. To provide suggestions to the Academy, NRC and other institutions and agencies for such improvement in program direction as may appear useful.

4. The Joint Consultative Committee would function as an advisory body. Its influence will depend upon its vision, understanding, and powers of persuasion consistent with the goal of the joint relationship.

5. To function as a "sounding board" in relation to policy questions relating to the proper role of science and technology in Egyptian development. For examine, critical policy choices may be debated each year with committee members before making final decisions. Suggestions may be requested also regarding how particular research programs might be structured to meet explicit national development needs.

6. In addition to the direct program-related functions of the Joint Consultative Committee, it should establish liaison with the Joint Working Group on Science and Technology (formed to foster cooperation among comparable scientific organizations in Egypt and the United States). The functions of the committee while complementing the activities of the Joint Working Group, will not be constrained by any specific requirements.

To supplement the activities of the Joint Consultative Committee members, a special study team (of one or two individuals selected by the Committee) should conduct, in Egypt, prior to each meeting, data collection and analyses essential to the performance of evaluation and other Committee functions.

Despite the fact that the implementation of the Phase II portion of this effort will depend on progress achieved during the first two years (Phase I), it will be necessary to begin planning for Phase II during the course of the second year.

The Egyptian institutions will receive technical assistance, participant training, and equipment. The ASRT will receive local currency funds for contract payments to be used as incentives. Two high-level advisors will be attached to the ASRT and NRC respectively during the lieft of the project. The ASRT has designed the General Secretary of the organization and the head of its R&D division as counterparts. The counterpart for the NRC advisor will be the head of the Technical Sector, the Project Manager, and the head of the Marketing and Sponsor Research Office.

Specialized teams brought to Egypt will work with counterparts as well. The design team for the information project will work directly with the Director of NIDOC, as well as with officials of other information entities.

The Prime Contractor will, directly or through sub-contractors:

1. Provide the Advisor to the Academy and the Advisor to NRC.

2. Recruit consultant and training teams as needed in Egypt.

3. Make necessary arrangements in the U.S. for training of Egyptian.

4. Assist in procuring equipment and materials for use in Egypt.

Logistical Support in Egypt: The ASRT and the NRC will provide office space, internal transportation, and secretarial services to advisors, teams, and training personnel. The U.S. will provide international travel, per diem, and associated costs.

Management Capabilities: The primary focus of the project will center upon improving management capabilities of the Academy, NRC, and associated institutions. These will be tested in specific research and demonstration projects during the first two years.

B.5. A.I.D. A full time staff member has been assigned to the Cairo Mission and will serve as project manager. He will work under the guidance of the Technical Assistance Officer.

Implementation Plan

The steps to be taken and their timing is outlined in Section B, Part II, and in the PPT network. (Annex D.)

C. Monitoring and Evaluation Arrangements

Monitoring of inputs, outputs, and key project management actions will be carried out through the PPT System.

In addition to the regular monitoring of project progress, there are two evaluations scheduled during Phase I. The first evaluation will occur one year after the arrival of the two advisors. This evaluation will focus primarily on a comprehensive review and analysis of implementation to date. It will attempt to identify any particular problem areas, to determine why the problems exist, what changes need to be made in the project design or the approach to implementation, and what steps external to the project may be required in order to permit progress at the planned rate.

In addition to this management-focused evaluation, the evaluation should also look at the questions of relevance and acceptability of the project in light of the conditions in the country as of that time, and in light of any impressions that activities thus far may have made on the scientific community, on the government, on the academic community, and on the public as a whole. To the extent possible, this evaluation should also take a preliminary look at progress in building an institution. The question of public acceptability relates to this, but in addition, the advisors may be able to make some judgments as to such factors as cohesiveness, a sense of common purpose and organization, etc.

When the advisors first arrive on board, they should be requested to prepare a set of criteria standards by which they will rate the satisfactory maturity of the institution. It may be helpful for this to be worked out with the Egyptians, and possibly to be shared with all those working in activities directly affected by the project; this is equivalent to a good supervisor letting his staff know what he expects of them throughout a certain time period. These criteria would be used in evaluating the project along with implementation objectives and, ultimately, questions of the over all impact of the institution and its program. These criteria, and the standards attached to them should be examined for their own relevance during the initial evaluation.

It is anticipated that the first evaluation would be conducted with members of the Mission, the advisors to the ASRT and the NRC, and key Egyptians associated with the project. The evaluation will take into account results of the first two meetings held by the joint consultative committee.

The second evaluation will be combined with design of the Phase II project. This evaluation will again look at questions of implementation management, but given that the project will have been in operation for approximately two years, it should be possible to focus to a greater extent on the questions of relevance, acceptability and progress in creating an institution. By this time a number of research projects and two demonstration projects will be underway. The evaluation team will need to make judgements on the ability of the Egyptian organizations to conceptualize, select, and manage goal oriented research; all of the questions discussed in this paragraph relate to an assessment of progress in achieving the project purpose, which is "improved institutional capability of the Egyptian S/T community to develop and manage research programs to solve priority development problems." While all such judgments may not be possible in quantitative terms, there should be qualitative assessments against the criteria/standards which have been agreed to.

This second evaluation will also need to define the issues and answer the questions which will determine the direction and design of Phase II, should continuation be deemed desirable.

It is anticipated, given the requirement for developing the project design for Phase II, that outside assistance will be required to conduct the second evaluation/design exercise. Further thought needs to be given to the composition of the team as the project progresses, however, at this point, it appears that a combined team of independent Egyptian-U.S. personnel would be helpful, particularly in conducting an assessment of the institutional performance of the project plus developing the design of Phase II. In addition, the inclusion of an AID direct hire person - or a consultant who is experienced in developing Project Papers, should

be included in order to help the team organize their findings and recommendations in such a manner that there will be a minimum transition between their product and a project paper.

The following types of information might be included in the assessment made during the second round of evaluation:

1. The impact that technical assistance by advisors, policy management, and other consulting teams have had on the ASRT and the NRC in helping them develop policies and programs which would re-orient a significant portion of the research they fund or conduct toward applied research projects which address priority development problems.

2. Who has been trained, in what fields and the extent to which the training has resulted in or will result in line positions which permit efficient and functional carrying out of (1).

3. A quantitative evaluation of equipment delivered, and preliminary assessment of its effectiveness in specific research projects. It will also be necessary to determine the extent to which equipment will be needed in follow-on or new projects as part of the design of Phase II.

4. The status of the demonstration projects and their potential in Phase II.

5. The capability of the ASRT and the NRC to act as focal points for continued assistance in Phase II and for the project goal.

6. An assessment of the draft design for follow-on activity and a judgment on whether or not it should be implemented.

STI

The STI evaluation will be carried out separately, through the offices of the National Science Foundation, which has worked out specific means and methodology in the conceptualizing and elaboration of its portion of the program. The reason for this parallel evaluation is that the establishment of an information network is a component with separate but related objectives to the program as a whole. The NSF examination of the first phase will nevertheless be looked at by the main evaluation team in terms of the overall project objectives and to what extent the STI component is on track.

Criteria for the evaluation of project performance will be in terms of specific output or deliverables for each of the four major STI tasks:

Task	Output
1. STI Design Study	- Formulation of a national Information policy - Blueprint of a National System for STI - Survey and Assessment of Information Resources - Survey of Manpower for Information Work - Manpower Preparation Plan - Inventory of R&D Projects
2. Computer Accessed Information Reference	- Development of maximum of 150 profiles - Five trained specialists in SDI techniques - Provision of actual documents to service subscriber - Establishment of a base to measure cost/benefits actually derived from the system
3. Supply of Current Materials	- Development of a plan for supplying materials - Acquisition and delivery of materials and attendant equipment - Training and promotion program in place
4. Training	- In-service practical training provided in U.S. - Training workshops in Egypt - Completion of adjunct coursework by trainees in U.S.

Mechanisms for evaluating task accomplishment principally consist of:

1) the Program Committee on STI under the U.S.-Egyptian Joint Working Group on Technology, Research and Development, which meet concurrently with the JCC at six-month intervals.

2) a Group of special experts, including a core of peers who participated in the NSF technical review of the proposals for performing these tasks. The Group will be assembled under the aegis of the NAS Committee on International Scientific and Technical Information Programs whose function is to evaluate foreign and international information programs and to advise the NSF on same. It will be responsible for delivering an evaluation of the Phase I and an assessment of plans to Phase II of the STI program.

ANNEXES

A. PID Issues Paper

B. Technical Details

1. Detailed Description of the Scientific/ Technical Information Component

2. Basic Equipment List

3. Subprojects:

a. "More and Better Food" Demonstration Project

b. Illustrative Research Projects

C. Logical Framework Matrix

D. PPT Network and Description

E. Checklist of Statutory Criteria

F. GOE Application for Assistance

G. Request for Approval of Excess Local Currency

H. Detailed Project Budget

I. Bilateral Assistance from International Organizations

J. Working Conditions

K. National Academy of Sciences Report (copies located NE/TECH

L. Research Triangle Institute Report (copies located NE/TE

OPTIONAL FORM NO. 10
JULY 1973 EDITION
GSA FPMR (41 CFR) 101-11.6

ANNEX A

UNITED STATES GOVERNMENT

Memorandum

TO : See Distribution

DATE: March 16, 1976

FROM : NE/TECH/EHR, Andre B. Colpitts, Project Committee Chairperson

SUBJECT: Issues for NE Advisory Committee to Technological Research and Development Project - Egypt

Meeting: NE Advisory Committee
March 17, 1976
9 A.M. - NE Conference Room 6439

The Project Committee for the Technological R&D Project - Egypt met March 12, 1976 at 2:00 P.M. to review subject PID (distributed to NE-AC members under earlier memorandum) and to discuss the issues raised in the attached paper prepared by the Committee Chairperson. This memorandum summarizes the results of that meeting.

1. The PID describes a project area which is in accord with program and policy directions of the Agency (P.D. 51).

2. The design orientation chosen is derived from the problem statement. It is, however, a very complex project including many elements; the management of this project will be a key variable for determining its success or failure. There is, nevertheless, a limited structure to the project that serves to focus the effort--organizational focus is on the Egyptian Academy of Scientific Research and Technology and the National Research Center; operational focus is on the design, management, conduct, and evaluation of strategies and plans for technological R&D; process or performance focus is on levels and channels of interaction between producers of T-R&D and decision-makers and administrators of industrial and development programs.

The Committee did make clear, however, that the project should be carefully phased over the three to five year period. Due to the complexity of the project and the short period of time available for project design, the first eight to twelve months of the project should be spent in laying out a fully developed implementation plan with substantial progress in the design of two or three major T-R&D strategies or plans. AID then should have the opportunity to review that work and make a decision to continue or not. Initial project approval should be given to all the functions that will be performed with the understanding that funding for the purchase of equipment, pilot plant, or contract

5010-110

Buy U.S. Savings Bonds Regularly on the Payroll Savings Plan

technical assistance will be forthcoming in phases as the implementation plans justify those expenditures.

3. The type of programs developed for R&D expenditure under this project must be oriented toward AID target groups and/or priority development concerns. The authorization/approval systems or criteria will have to reflect this condition.

4. The Committee approved the idea of a "capitalization" fund for contract research for the Academy under the assumption that AID-Contractor-GOE joint approval safeguards will be built into the project. The control concept that would be instituted is one of oversight control--the method of funding control employed by the NSF and other government funding agencies in the U.S.

5. Technical assistance contractors might come from several sources, but there must be a prime contractor to pull together and be responsible for all pieces. The question is whether or not we can find such a contractor. Secondly, the Mission should be provided a direct-hire monitor for this project area--do we have internal capability in this area? The Committee feels that some resolution of both these questions should be made before proceeding much further with this design orientation.

6. Given the Mission's desire to program this TA project for FY 76, the Committee recommends that the PRP stage of project design be incorporated into a modified Project Paper (PP) which would be written by a team of five consultants during a 3-week TDY to Cairo in late April. That effort could then be judged by the Mission and AID/W in terms of project feasibility and final project approval could be given in late May or the reserved FY 76 funds could be programmed to other projects. In the latter case, project development would proceed toward FY 77 funding.

The Committee recommends grant funding of the project for at least three years; TA elements would be totally funded by grants. The project could well lead to a large loan for scientific and technological research and development equipment during the fourth and fifth years, although substantial grant funds would be used for equipment purchase during the first phase of the project also.

7. The PP team must seek information to answer questions in the following areas:

-- Institutional capability of the Academy and its Special Research Councils.

-- Organization of the National Research Council.

-- Present needs for T-R&D among end-users (industry, ministries, action programs) and their relations with T-R&D producer sector; regional needs for T-R&D that may be met by Egyptian scientists.

-- Status of equipment procurement systems, maintenance and repair capability, stores organization and control.

-- Evaluation of R&D design and project criteria.

TECHNICAL DETAILS

1. DETAILED PROJECT DESCRIPTION — SCIENCE AND TECHNOLOGY INFORMATION

Phase I will include two sets of activities. The first will result in a detailed design for long term development of a nationwide Egyptian scientific and technical information network, including specification of appropriate technology for creating access to scientific and technical information in Egypt and elsewhere (particularly the U.S.), and with guidelines and a schedule for step-by-step implementation. This design will be developed by a U.S. consulting team working with a group of managers and specialists from major Egyptian information centers. NIDOC of the ASRT will be the lead Egyptian agency for development of the design. The second set of activities will provide immediate improvements in Egyptian capabilities to apply information in support of research activities. Three projects will be started immediately. One will provide an initial set of approximately 150 Egyptian researchers or research teams with computer-retrieved listings of current research reports relevant to their areas of research. This will be provided through a U.S.-based computer facility in cooperation with 5 or 6 Egyptian information centers. The second project will provide priority basic and applied scientific and engineering journals and reports. The purpose of this project is to build up the Egyptian information base for research. Where feasible, materials will be supplied in microfiche. Appropriate equipment will be provided as well, with maintenance and training arrangements. Finally, there will be training for key Egyptian information personnel so that they can use the new information resources and equipment and provide effective services to researchers.

BEST AVAILABLE DOCUMENT

Design of a Nationwide Network

The objective of this project is to provide, in a systematic manner, methodical and technical guidance and assistance in the design, planning, and implementation of a nationwide scientific and technical information network in Egypt. Phase I, lasting 18 months, is the design phase. Results are expected to include: (1) a statement of national S&T information policy; (2) a design and plan for a nationwide system of S&T information services, based on an assessment of needs and existing resources; and (3) guidelines and a way for an education and training program to supply personnel required to implement and operate the national information network. A team of U.S. information scientists will work with managers and specialists of Egyptian information centers in developing the design. A sterring committee of five prominent Egyptian information managers will help guide the project. NIDOC and various components of the University of Cairo, including the computer center and the library and statistical departments will contribute staff and resources to this project as well. The U.S. consulting team will be managed by Dr. Vlaldimir Slamecka School of Information and Computer Science, Georgia Tech, and President, Information Engineering International, Atlanta, Georgia. He will assume overall responsibility for consulting services and the completion of the design. Interim results from the project, based on the first year of effort, will be reviewed by the U.S.-Egyptian Program Committee on Scientific and Technical Information, which operates under the U.S. Egyptian Joint Working Group Technology Research and Development.

Computer Accessed Information Reference Service

An essential ingredient of industrial development and technological progress is awareness of scientific and technical information (STI) that may be put to use in practical ways. In highly developed countries the surfeit of information presents a unique problem -- how to find one's way through the excess to the particular information that is needed. In less developed countries, where needed current information is lacking, the basic problem is the same -- how to find the particular information that is needed.

In the latter case, and Egypt is a prime example, the need is to provide current information to the people who use it, and to keep them aware of new information as it appears in the literature (books, journals, reports, trade papers, etc.) of their particular scientific and technical disciplines. Modern techniques of computer oriented information storage and retrieval systems provide the necessary capability.

Such systems are organized around "data bases" which are simply collections of documents (letters, abstracts, texts, descriptor terms) that are accumulated in computer readable form in a systematic fashion. Under program control, the contents of these data bases may be read by a computer to (1) compose an answer to a particular question, such as "what documents are there that bear on the subject of solid-state physics"; or (2) to periodically and automatically select all new documents entered in a data base that may be of particular interest to a subscriber of this alerting service. Typically the functions noted above are called (1) retrospective searching, and (2) selective dissemination of information (SDI).

It is specifically with respect to the latter service that this proposal is concerned.

The service requires:

1. identification of individuals who have an urgent need for information in a well defined area of technology.
2. construction for each of these individuals of a "profile", that uniquely defines that person's (or cohesive group's) information needs.
3. testing of profile for precision and relevance of the notification output when the profiles are run in the computer against the accumulated new additions to the data bases.
4. acquisition of the actual documents by the service subscriber that are determined to be of interest.

The starting point for this proposed project is the identification and selection of individuals to be profiled. These persons should be representatives of the industrial sectors of major economic importance to Egypt. Included are such sectors as chemical technology, food and agriculture, health and hygiene, energy, natural resources, petroleum, and building and construction.

The status of the capability of Egyptian information specialists at present is not sufficient to create the necessary SDI profiles. The total number of profiles contemplated in this project is 150. Hence, to meet the overall objective of creating a modern STI system in this country it will be necessary to train available specialists in the methodology and techniques of profile construction.

The plan is to establish a training program in Egypt for personnel selected from such institutions as Cairo University, National Information Documentation Center and other appropriate agencies. One or more United States experts in the field will conduct the training sessions, guide the development of SDI profile construction capability and will supervise actual construction of the 150 profile that will constitute the pilot phase of the project. Included in the program is the provision to bring four or five qualified Egyptians to the United States for a period of two months each for additional intensive training on-site at such SDI and document supply agencies as the National Technical Information Service, Smithsonian Scientific Information Exchange and other institutions in the academic area.

The 150 profiles generated by the in-Egypt phase of this project will be run against the data bases made available through the efforts of the contractor. The results of the run will be dispatched to the individuals in Egypt for use, for testing, for revision for greater precision if necessary, and as a basis for acquisition of the documents of interest.

Thus, this project will have several near term practical results:

1. It will train Egyptian information specialists in current SDI profiling techniques.

2. It will extend the knowledge base of such trained specialists in further methodology and resources.

3. It will meet current, actual information needs in industrial sectors of major national importance.

4. It will alert users to be practical benefits of current information.

5. A base will be provided for the measure of the cost/benefits actually derived from the system established by this project.

Supply of Current Materials

Egyptian libraries lack current scientific and technical information materials, notably journals and reports. Consequently, scientists and engineers do not make extensive use of these resources. This also means that researchers make little systematic use of any current information. Individual subscriptions to journals, for example, are beyond the means of researchers. A further result is that Egyptian research does not benefit from scientific and engineering development occurring elsewhere, and particularly in the U.S.

To correct this situation, Egyptian libraries and information centers have to be built up so they contain current S&T materials. Emphasis will be on developing NIDOC into a comprehensive information center containing the results of basic and applied research across the fields of research being pursued in Egypt. Other information centers and university libraries will be assisted as well, but only NIDOC will be developed as the comprehensive national S&T information center.

Two phases are planned. First, there will be a three-month planning project. During this project, a U.S. team of consultants will identify Egyptian needs for current S&T materials. This will be done in connection with the national information systems design project. The U.S. contractor will also identify which of these materials exist in microfiche and estimate costs for acquiring or having the needed materials produced in microfiche. Michrfiche is recommended as the storage medium because it provides a number of cost advantages over storing journals and reports in paper form. Estimates will also be provided for the costs required for acquiring and servicing the equipment required to read microfishe or to produce paper copy on

demand. The result of this planning study will be a detailed set of cost estimates for supplying current S&T materials to Egyptian libraries and information centers. Estimates will be provided by increments, based on an increasing number of journals to an increasing number of information centers, and for varying numbers of years -- both backward to capture recent past materials, and forward for five years.

The second phase will be based on the results of the first phase design study. An RFP will be prepared to select a contractor who will be responsible for: (1) acquiring and delivering microfiche versions of specified journals and report series; and (2) acquiring, installing, servicing, and training Egyptian information personnel in the use of the equipment. The RFP will cover only an initial stage of delivery of needed material. After approximately one year of operation, the effort will be assessed to determine if it should be modified in any way or simply expanded to fill remaining gaps in current literature held by major information centers and libraries used by researchers.

Education and Training

Staff of NIDOC and other S&T information centers in Egypt lack capabilities for using modern information retrieval tools and for effectively assisting researchers in locating needed information. Two approaches will be taken to begin to correct this situation. First, four information specialists from NIDOC will be provided academic and on-the-job experience to provide them with specific skills now missing. This will help NIDOC become an effective national S&T information center. Second, an effort will be started to begin to modernize the education provided in the library and information field by the University of Cairo -- the only institution in the Arab world offering a graduate library degree. In the latter case, one ~~ix~~ individual will be offered further training during the first year of this project. In subsequent years, additional persons from NIDOC, other S&T information centers, and universities will be provided training to acquire specific competencies. Further education for members of the library department of the Cairo University is included to strengthen this department so that it can supply Egypt with the increasing number of trained personnel that will be required to operate its national S&T netword.

For both the NIDOC and University of Cairo trainees, training will be non-degree and focused on acquisition of specific skills needed by the trainee's organization. Training will consist of:

a) On-the-job or in-service practical training provided at the United States appropriate information centers and facilities, such as the Library of Congress, National Technical Information Service, Smithsonian Science Information Exchange, Chemical Abstracts Service and the National Library of Medicine.

b) Opportunity for taking courses at one of a number of U.S. University library and information service schools such as the Catholic University Department of Library and Information Science.

c) Some field visits to pertinent projects, installations or government agencies.

ANNEX B 2.

The following is an illustrative "core" equipment list, identified by NRC in terms of first, second, and third priority needs. The ordering of basic equipment will not take place until the Egyptians and the U.S. consulting teams have analyzed needs in terms of budget capabilities, relevance to R&D projects, and appropriateness of the technology in terms of defined applied research tasks.

BEST AVAILABLE DOCUMENT

National Research Centre

Central Research Laboratory: Special Services

First Priority Equipment

Apparatus/Instrument/ Accessory	Relevant Capability or Evaluation Standard (price not available)	Manufacturer
Hotstage microscope	Mineralogical analysis (ceramics & glass)	
Compressive machine (40 ton)	Compressive strength (ceramics & glass)	
Brightness tester	Brightness (paper)	Zeiss or equivalent
Porosity tester	Porosity (paper)	Frank or equivalent
Stiffness tester	Stiffness (paper)	same
Expansion tester	Dimensional stability (paper)	same
Printability tester	Printability (paper)	same
Universal tester for wood board	Bending & tensible strength	same
Tensile strength machine/s	Complete range of measurement capabilities for paper, textile, leather, plastic materials, etc. (but not metals)	Please recommend
3 Flow cup, model 243	Viscosity & density (paints & varnishes)	Erichsen GmbH, Hemer-Sundwig, westf.
3 Flow cup with controlled temp. jacket		same
2 Dip viscosity flow cup, model 321		same
2 Viscostat Rotothinner model 322		same
Complete set of pycnometer cups		same
2 Hegeman grindometer, type 232		same
2 Garmsen fineness of grind gauge (DRP) type 256	Fineness of grind (paints and varnishes)	same
Erichsen universal drying time recorder, model 338	Drying time (paints & varnishes)	same
2 Rossmann thickness gauge, model 296	Film thickness (paints & varnishes)	same
3 Dry film thickness gauge, model 233		same
Paint inspection gauge, model 455		same

First Priority Equipment (continued)

Apparatus/Instrument/ Accessory	Relevant Capability or Evaluation Standard	Manufacturer
3 Pfund cryptometer, model 237, I, II & III. Four sets of test cards, 21, 22, 23, & 24	Hiding power (paints & varnishes)	Erichson GmbH, Hemer-Sundwig westf.
Universal cupping test machine model 204	Elasticity (paints & varnishes)	same
Stamping lacquer bead test model 227		same
Conical mandrel bending tester, model 312		same
Distensibility tester (Eikens) model 439		same
Multicross cutter for the grid cutting, model 295		same
Pendulum hardness tester, model 299	Scratch and hardness (paints and varnishes)	same
Hardness and adhesion instrument, model 413		same
Scratch-hardness instrument, model 239/II motor driven		same
Holst micro indentation tester, model 462		same
3 Hardness test rods, model 318		same
Abrasion resistance tester (DBGM) model 317	Abrasion (paints & varnishes)	same
Inflammability tester, model 262/II k	Inflammability (paints & varnishes)	same
Glossmeter type GG 2700	Gloss (paints & varnishes)	same
Corrosion testing apparatus, model 351	Corrosion and durability (paints & varnishes)	same
Schlitt humidotherm testing apparatus, model 330		same
Climatest accelerated test apparatus, model 438		same
Rubo abraco tester, model 460		same
Washability and scrubbing tester, model 255	Washability and scrubbing (paints & varnishes)	
Roto-scrub tester, model 447		same
Chalking rate tester, model 244	Chalking (paint & varnishes)	same
Gardner clarimeter ASTM D 1746	Clarity (paints & varnishes)	Please rec mend
Gardner colour measurements colorimeter	Colours (different materials)	

First Priority Equipment (continued)

Apparatus/Instrument/ Accessory	Relevant Capability or Evaluation Standard	Manufacturer
Laby system, XYZ System		
Photoelectric Leukometer	Whitness (different materials)	Zeiss
6 Ball mills rotatary (laboratory) for 100, 250 & 500 grams paints (porcelain balls) and motor driven stand	Milling	Please recommend
2 Red-Devil mixer type 392		
Laboratory setup (stainless steel, 10-15 litres capacity kettle for cooking resins complete. (Carl Ganzler 516 Duren, Postfach 107).	Cooking of resins (paints & varnishes)	Erichsen GmbH
Spinner coater, model 334	Film applicators (paints & varnishes)	same
2 Complete sets of film applicators, models 288 and 360 (20 µg - 180 µg).		
Spiral type film applicators		
Sagging instrument, model 419	Sagging (paints & varnishes)	same
Pore test instrument using high voltages	Porosity, filling and cracks (paints & varnishes)	
Sedimentation balance	Sedimentation rate (paints & pigments)	Glasuret GmbH
Autoanalyser for salinity, pH, oxygen and nutritives (for sea water)	Determination of environmental conditions around marine paints	Erichsen GmbH
Injection moulding machine (labor)	Plastic forming of test pieces	
Extrusion moulding machine (labor)	Plastic forming of test pieces	
Capillary viscometer Zwick 104	Viscoelasticity of thermoplastics and determination of melt index	Zwick
Universal testing machine Zwick series 1400 or 1300	Tensile strength, compression & elongation	
Pendulum impact tester Zwick 5102 according to Charpy & Izod	Impact strength of plastics & composites	
Dimensional stability tester according to Vicat & Martens Zwick 4201 & 04	Dimensional stability of plastics	
Rockwell hardness tester Zwick 3106	Hardness (Rockwell)	
Two roller mixing machine (Lab. scale)	Rubber compounding	
Internal mixer (Lab. scale)		

First Priority Equipment (continued)

Apparatus/Instrument/ Accessory	Relevant Capability or Evaluation Standard	Manufacturer
Hydraulic press with heating plates (up to 200° C ± 1°C)	Vulcanization of rubber sheeting and forming	
Tortion vulcameter, Zwick 4307	Rate of vulcanization of rubber mizes, start & completion of cross-linking, activating energy	
Plastometer. Zwick 4304 according to Mooney	Plasticity of raw and compounded rubber and scorch time	
According to Shore, A, C, and D Zwick 7201	Hardness for soft materials	
Zwick rubber fatigue testing machine 5301	Resistance of rubber against cracks	
A series of punch presses & dies Zwick 7100	Specimen cutting devices (rubber)	
Abrasion tester (Du Pont-Croydon)	Abrasion resisence of rubber & composites	
Apparatus for measuring wear, fade & coefficient of friction of composites	Coefficient of friction of abrasive materials, e.g. tire, brakes, & clutch materials	
Rotovisco Haake RV3, with X-Y recorder	Rheometry of pharmaceutical preparations (newtonian & non-newtonian): solutions, colloidal dispersions, suspensions, emulsions, ointments, creams, pastes, suppositories, etc.	Haake, Berlin Contravas AG
Balance-Rheometer		
Set of Ubbelohde viscometers with 2 heating/cooling jackets		
Set of Cannon Penske viscometers with 2 heating/cooling jackets		
Three roller mill, laboratory		
Coulter counter model B with Coulter channelyzer model P 128 with osciloscope display	Particle size analysis, Crystal Growth, Aggregation/deaggregation phenomena (powders, suspensions, emulsions, microcrystalline suspensions, ophthalmic ointments, aerosols)	
Millipore IIMC particle measurement computer system		
Ultrasonic disintegrator		
Cube mixer, laboratory		
Ball mill, laboratory		

First Priority Equipment (continued)

Apparatus/Instrument/ Accessory	Relevant Capability or Evaluation Standard	Manufacturer
Sieve Vibrator with a set of sieves		
Orr surface area pore volume analyzer		
Tablet dissolution tester (USP XVIII) with synchronous motor (220V,50 Hz), gear plates, gold-plated basket, flask and cover	Physical constants for solid unit dosage forms (tablets, capsules, suppositories)	Hanson Research Corp., Northridge, Calif., U.S.A.
Consistometer	same	Haake, Berlin
Millipore membrane filter holder (90 mm) with stainless steel pressure vessel	Particulate contamination in injectables	Millipore, Neu Isenburg.
Sartorius absroption tester, complete	In vitro control of drug release	Sartorius
Automilk moisture tester with infrared heater	Testing of milk	
Abbe refractometer	Testing of milk	
Dipping refractometer	Testing of milk	
Milkotester	Testing of milk and dairy products for fat, total solids, proteins, lactose	Milkotester Co., U.S.A.
Leather thickness gauge, Ø of feeler 10 mm, measuring pressure 500 gm/cm, reading exact to 0.01 mm (IUP /.3), length of arm 60 mm, or nearest	Leather thickness	
Tensile strength machine for heavy leathers (DIN 53 328, IUP/.8, with uniform speed of separation of the jaws of 100 ± 20 mm./minute, complete with recorder, jaws, set of grips for clamping leather specimens and accessories	Tensile strength, stitch tear, buckle tear, etc.	Otto Wolpert, Frank, Zwick or similar
Repair and spare parts for apparatus for testing flexlife and finishing of upper leather, type Bally Flexometer, complete with accessories.	Flexlife and cracking of leather finish	
Repair and spare parts for apparatus for two-dimensional extension of light leather (IUP/.13), type Bally Tensometer, complete with accessories.	Two-dimensional extension of light leather	

First Priority Equipment (continued)

Apparatus/Instrument/ Accessory	Relevant Capability or Evaluation Standard	Manufacturer
Repair and spare parts for apparatus for measuring the waterproofness of sole leather under dynamic conditions (IUP/11), type Bally permeometer, complete with accessories	Waterproofness of sole leather under dynamic conditions	
As above (IUP/10), with accessories including standard absorbent cloth (300 g/cm2)	same	
Leather cutting press knife, (hard steel edge, for tensile strength (DIN 533289)		
Same for stitch tearing 100x20 mm		
Same for buckle tearing 100x40 mm		
Rectangular leather cutting press knife 150x25 mm, with slot		
Same 50x25 mm, with slot (IUP/8)		
Same 200x30 mm		
Same 100x20 mm		
Same 100x40 mm		
Same 40x40 mm		
Circular leather cutting knife Ø 70 mm		
Same Ø 35 mm		
Motorised specimen cutting press for leather, fiberboard, plastic, etc. up to 9 mm thick		
Abrasion tester (DIN 53516), complete with accessories, type Zwick 6106 or similar	Abrasion tests for leather	
Instrument for measuring sweatfastness of leather, type perspirometer, AATCC, or Hydrotest-Geraet, Chemiocolor AG, CH-8602 Kilchkerg ZH (VESLIC, O 4260)	Sweatfastness of leather	
Rub fastness tester - VESLIC, complete with accessories (VESLIC, C 4500)	Rub fastness of leather	
Light fastness, blue scale (1-8) on wool fabric (VESLIC, C 4C10)	Light fastness of leather	Beuth-Vertriebs, GmbH, Berlin W11

First Priority Equipment (continued)

Apparatus/Instrument/ Accessory	Relevant Capability or Evaluation Standard	Manufacturer
Stelometer	Strength (textiles)	
Ball's sorter	Cotton length	
Oven and basket type apparatus	Moisture content	
Abrasion resistence tester	Yarn abrasion	
Elemendrof tester	Tearing test	
Bursting tester	Bursting strength	
Abrasion & flexing tester	Fabric abrasion	Karl Frank GmbH
Instron apparatus	Tensile strength	USTER
Fatigue tester	Fatigue test for yarns & fabrics	
Rotameters	Air flow	
Xenotest fadometer	Light fastness of dyed goods	Quartz Lampen, GmbH
Lanimeter: Projection microscope and camera	Maturity & fiber identification	
Mechanical fiber blender	Fiber blending	
Tubular Furance, Type RR 4014 FN 33.334, Temp. 1800 (70 V, max. 40 Amp.), with 2 heating tubes and 2 thermocouples	For ceramics	Herneus
Tubular furnace, type REH 7/60 N-45610, temp. 1300 (220 V, 11.5 Ampl), with 4 beating tubes.	For ceramics	Ruhstrat
Tubular furnace, type K. 148 No. 3121, Temp. 1500 (32/ 11.5 AMp.), with 4 beating tubes	For ceramics	Johnson Matthey
Chambers furnace, with kanthal super element for HT 8, 30 Kanthal super element for HT 16, 40 Connection contact 2 Thermcouples.	For ceramics	Conrad Nober Elektrobau Lilienthal Brauien Johs-Riechermann
Dialatometer, Malkin type, with 5 heating tubes of the tubular furnace, 3 silica rods, 5 fused silica tubes, 2 micrometers.	For ceramics	J.Malkin Co., Stoke-on-Trent, England.
Refractoriness testing apparatus, No. EV 16 A - 1960	For ceramics	Chem. Lab Tonindustrie, Berl Friedenau

First Priority Equipment (continued)

Apparatus/Instrument/ Accessory	Relevant Capability or Evaluation Standard	Manufacturer
Complete carbon gradual resistance furnance, type EVL 12, with 10 refractory rods, 100 carbon electrodes, 20 carbon rings, 500 refractory test holds, 10 Refractory ring Seger cones, and complete series from cone No. 16-42 (100 each).	For ceramics	Chem. Lab Ton-industrie, Berlin-Friedenau
R.U.L. Testing apparatus, No. 5702 No. with 10 refractory tubes, 100 refract. discs, 20 iron electrodes, 3 Pt-Th-18 thermocouples, 100 lower and upper carbon stamps, 200 carbon discs.	For ceramics	Chem. Lab Ton-industrie, Berlin-Friedenau

Demonstration Project - NRC (More and Better Food)

Introduction One of the better ways of providing technical and equipment support to a research institution such as NRC, is to focus support activity around an appropriate specific research project having requirements for the types of support it is sought to provide. In this way the various elements of the support program can be related to specific tasks and activities of the research project. Thus, training, technical and management assistance and equipment provision may all be focused in a coordinated program, where their effect can be readily perceived and evaluated. At the same time of course, benefit is realized as a consequence of the results of the research project itself and this adds another dimension of value to the support effort. This approach is in contrast to one in which the elements of support (training, technical assistance, equipment) are utilized to generally improve the overall performance and capabilities of the recipient, without reference to any specific research activity or goal.

Although the latter method has merit, it is most applicable in situations where the size of the support program is adequate to meet such generalized institution-wide needs. When support resources are relatively limited then the argument in favor of a research project-specific approach is stronger.

Since the NRC is a very large institution to which generalized support overall probably exceeds available resources, then it is concluded to advocate the project-specific approach, at least in Phase I.

As a consequence, the Director and top management of NRC were asked to develop a concept for a research project suitable to this purpose, as well as meeting several other criteria:

a. that the project deal with a problem of demonstrated national development importance

b. that it require a multidisciplinary approach

c. that it involve a number of different types of variables or factors which would have to be assessed in the process of the research, the results of which would then have to be integrated in order to arrive at an optimized solution. (This is to help insure that the integrative management skills of the NRC be given full opportunity for involvement and to therefore benefit from the support effort.)

After consideration, NRC management suggested a research theme which meets these requirements, concerning improvement of the health of the populace through improved access to protein for their diet.

Background of the Research Many Egyptians, especially the rural poor, suffer from various dietary deficiencies. Prominent among these is inadequate protein intake. Although there is generally sufficient calorie availability to sustain the individual, there is in many instances a pronounced shortage of necessary protein intake. Such protein may be acquired from either plant or animal sources, although that from animals is more fully assimilable, while at the same time being appreciably more expensive and less available. Protein deficiency effects are especially noticable among the children of the poor where it results in various permanent or temporary disabilities.

In addition to the usual plant and animal sources of protein, it may be made available from an "unconventional" source, such as single-cell organisms (fungi, algae, yeast, mold, etc.) which may in turn be brown or cultivated intentionally and nourished on waste agricultural materials such as begasse, coffee berry hulls, animal waste, canning plant by-products, etc. Seafood is a good source of protein but of course is often not readily available, especially to those living inland in undeveloped geographic regions.

Recent studies have shown that waste accounts for very large losses in protein and other food componants. This waste may result from handling losses, rot, insects, rodents, milling losses, etc. If it could be substantially reduced, world food supplies available for consumption could increase as much as a theoretical 20% or so, based on the same initial production.

Yet another approach to increased protein supplies is the genetic improvement of plants and animals to yield more food value, or to grow to harvesting size more quickly. Improved cultivation and fertilizer practices can contribute significantly to this realization.

Finally, consumers may be brought to accept protein in food forms with which they are unfamiliar, but which are relatively abundant. Subjective taste enters heavily into such choices however and social custom may prevent utilization of an otherwise good source of additional protein.

All of these are considered worthy of exploration by NRC staff members, and a program to do so is the theme of their research proposal.

Methodology Generally, NRC proposes to approach the problem of increasing protein availability for the Egyptian populace through a series of simultaneous investigations along the lines of the possibilities suggested above. A microcosm will be selected which is typical of the Egyptian rural living pattern. Baseline data will be collected, and a structured series of experiments undertaken involving the significant recognizable variables relating to protein availability, in a search for viable combinations of new or modified processes to increase protein availability. When and if these are found and reduced to practice, a program will be designed and carried out to attempt to establish these methods generally in other regions.

Selection of a typical area in the Nile Valley to serve as a locus for the experimental program will be the first step. Its typicality and size should permit extrapolation of program results to the larger part of the rural population, plus implications for the urban population as well.

Baseline data will be collected on the test population, including demographic data, social analysis, economic factors and nutritional characteristics. This will provide the data against which to measure effects of the program as it develops. Variables which will be examined in the experimental phase include:

a. soils, water, climate
b. plant and animal species
c. cultivation (including fertilizers) and husbandry
d. harvesting and storage practices
e. distribution methods
f. pricing and government policies and regulations
g. consumer characteristics

The research matrix will be designed to examine those aspects of these various factors which may in some feasible way be modified or combined so as to effect total protein availability for the population. This research will involve appreciable field work and laboratory programs as well.

It will require participation by a wide range of science and technology skills - life scientists, economists, demographers, agriculturalists, earth scientists, engineers. Throughout all will be the requirement for efficient management of the complex program.

On the assumption that useful results will be forthcoming, a program of promulgation will be developed and implemented, seeking the introduction of the project findings and methods into other regions where they have promise of improving protein availability.

Required Inputs - Egyptian

a. Manpower. As indicated above, a wide range of scientific and engineering capabilities will be needed to carry out such a diversified program. Some of these will come from the staff of NRC, but there will necessarily be experts from other organizations, both public and private. NRC estimates the technical manpower requirement as follows: 15 Professors, 46 Associate Professors, 76 Researchers and around 200 technicians. (These academic titles are used in NRC to denote professional rank, much as they are in purely academic institutions.) Due to the complexity of the undertaking, it will require fulltime top management direction, and this will be supplied largely from NRC.

Other institutions which will become involved in the program include: Institute of Nutrition, Cairo University Faculties of Agriculture and Medecine, Alexandria University, Ministry of Agriculture Applied Microbiology Department, and the Agriculture Research Center.

B. Facilities and Equipment. NRC presently is equipped with significant varieties of the necessary research apparatus and related facilities. In addition, the other Egyptian institutions which will participate also have their own physical resources to contribute to the program. The exact determination of such resources will be one of the initial activities under the program, but a preliminary survey has already been conducted which has revealed significant equipment deficiencies (see below under Required Inputs - AID Assisted).

C. Data and Information. It is recognized that appreciable data and information are already at hand which bear on the subject of the research program and these will be made available by the various institutions which possess them. Part of the value of the program will be the creation of a central information source which will remain a valuable research tool after the program is complete.

Required Inputs - AID Assisted.

A. Manpower. It is apparent that NRC will need backup in essentially all areas of the Demonstration Project; this includes both technical and administrative functions. Preliminary support personnel estimates of these requirements are:

1. Administration and project management (to be provided by the resident Advisor)
2. Agronomist
3. Soils scientist
4. Agricultural engineer
5. Animal husbandry expert
6. Rural sociologist
7. Industrial microbiologist
8. Nutritionist
9. Agri-business specialist

B. Equipment. A principal requirement for the Demonstration Project will be significant equipment inputs. Preliminary itemizations of these appear at the end of this Annex; these are for Phase I and it may be assumed that additional requirements will be identified for Phase II. Pilot plant and demonstration equipment may be expected to characterize Phase II equipment needs, but these can only be determined as Phase I progresses and the dimensions of the ultimate equipment requirements begin to become apparent.

Outputs

A. The most obvious output of the Demonstration Project will of course be the results of the research itself. As described previously, the potential benefits of the program for increasing the nutritional level and general welfare of significant portions of the Egyptian population, constitute its principal justification.

B. As a result of the project, NRC ability to plan relatively large and complex programs shall have been demonstrated and increased in significant degree. Although there is no basis of comparison by which to make such a determination, it would appear to be a reasonable assumption.

C. NRC's project management abilities will be tested by the Demonstration Project and, with this experience plus inputs of support assistance, significant improvement should result in this capability.

D. As a consequence of project participation, aided by the technical support provided under AID assistance, the basic technical proficiency and professionalism of the NRC staff will be increased. Additionally, this major effort in applied science will do much to demonstrate the meaning and utility of applied research for the NRC staff which has historically been oriented strongly toward academic research, Reorientation toward applied research is one of the basic objectives of the proposed support program to NRC.

E. The infusion of new technical and research equipment as a result of the support program will obviously increase the ability of NRC to perform laboratory research in many areas. As a result, it will be better able to serve the research requirements of its user communities. An additional, though intangible result will be the morale-lifting effect that introduction of new facilities has --particularly after the protracted period during which virtually no new equipment was available.

F. Finally, a demonstrable output will be the expanded knowledge of NRC on the part of various organizations and agencies in Egypt, which should be helpful in developing support for other goal-oriented programs in the future. Assuming the project is generally well managed and carried out, the reputation of NRC will be enhanced and it may begin to be regarded more and more as a source for pragmatic assistance with technical problems.

Costs The costs of providing training, technical assistance and equipment for Phase I of the Demonstration Project are contained in Section _____. The phasing and sequence of provision of the support elements are presented in the PERT charts appearing as Annex B.

Additional Benefits As stated at the outset of this Annex on the Demonstration Project, the principal support assistance to be given to NRC during Phase I is directed through this project. To the extent that other NRC staff members who are not directly involved in the Demonstration Project may be included in training and other support activities, the benefits of the support may be extended further within NRC.

Phasing. As alluded to previously, it is anticipated that the Demonstration Project will not be completed within Phase I of the AID support program, but that enough significant progress will have been made to permit effective planning for Phase II activities.

MORE AND BETTER FOOD

One of the major Egyptian goals in the national planning and reported publicly by President Anwar El Sadat is to increase agricultural production to achieve self-sufficiency in food, except for wheat, by the year 1980. To achieve such a goal during the next five years, research programs concerned with food production and its distribution, domestic food consumption and food imports and exports should be set. The aim of such a program is to make available to consumers nutritionally adequate diet at a lowest cost.

Obviously, components of such a research and development program are complex. In addition, they are interrelated with other programs aiming, in the first place, to satisfy the basic human needs: nutrition, housing and education. The satisfaction of these most basic needs is a necessary condition for the active and full participation of human beings in their society. In other words it affects the overall national production and economy. More and better food, as a demonstration project in the NRC would basically concentrate on food production in general and specifically would start to formulate to be able to cover the basic needs of energy and proteins and implement the project in a rural area. The on going research would be monitored and analysed. Changes in the state of development as well as their interrelationship with the various elements of development would be evaluated.

Some Aspects on the Situation of Protein

Food balance sheet compiled by the Ministry of Agriculture shows that the main source of protein is from vegetables origin mainly cereals, legumes and different varieties of vegetables. Cereals provide 66.5 % of the protein consumed by the average Egyptian (65 g/day from vegetable origin, 45 g from cereal/day) and supply them with 70% of energy needed (2725 k cal/capita/day). Animal protein on the other hand, would provide only 10 g/day capita which is nearly 65% less than the minimum amount of animal protein recommended by International agencies (29 g/day).

(2) There is evidence that Egyptians, especially children, suffer from anaemia and protein energy malnutrition; the incidence in children is in the order of 5%. Toxic factors present in legumes also aggravate the condition. Socio-economic factors are always a major cause of the prevalence of these diseases.

(3) To increase production of proteins from plant and animal sources the scheme mentioned in the original draft would be utilized, but emphasis would also be put on pest control and plant protection aiming at minimizing the losses.

(4) The non-conventional sources of protein as an adjuvant to natural sources will help in ultimate increase of protein.

Some work has already been carried out in NRC labs concerning the production of fats and proteins from micro-organisms (mould, yeast, Algae, ... etc.). Agricultural wastes (molasses, corn steep liquor, bisulphite liquor, ... etc.) have been utilized as nutritional sources for the micro-organisms.

Studies and investigations have been also carried out concerning the utilization of defatted oilseed meal (Cottonseed, sunflower, chufa tubers, ... etc.) as a source of protein for human and animal consumption.

Concerning cottonseed meal, attempts were made to remove the toxic gossypol from the defatted meal. Chemical as well as physical methods were applied on the meal and degossypolised varieties were obtained and evaluated from the chemical and nutritional points of view. Promising results are obtained.

Institutions Working on Protein (Examples)

1. National Research Center.
2. Institute of Nutrition.
3. Cairo University, Faculties (Agriculture, Medicine ... etc.)
4. Alexandria University, Faculties (Agriculture, Medicine ... etc.)
5. Ministry of Agriculture, Applied Microbiology Department.
6. Agriculture Research Center.

Summary of GOE Agriculture Policy at Present

Regarding the government policy instructing the cultivation of certain crops, within the crop rotation, the situation can be summarized as follows:

1. Cotton-growing is obligatory all over the country and must occupy at least one third of the area.

2. There are other obligatory crops, whose part is differing from one year to the next according to the economical policy.

3. Areas for experimental purposes and approved projects can get a special allowance concerning these regulations, following their own crop rotation.

Soil and Agronomy Studies

The soil studies may cover investigations on the growing conventional legumes in different soils, effect of inoculation with nodule bacteria and trace elements on production and improvement of the handling of backyard manures and retainance of its nutritional value. Effect of pesticides on the rhizosphere's microflora can be also considered.

Agronomy Studies

1. Crop rotation and intercropping of conventional legume plants.
2. Weed control and its role in plant production.
3. Growing of fodder plants.
4. Growing, rotation and irrigation requirements of vegetables.
5. Design of a pest control program for different crops to include three phases, one before planting, the second from planting till harvest, and the third to cover the post-harvest stage.

Selection of Experimental Site

a) Unit of Study

An agglomeration of villages representing the most prevalent socio-economic pattern in rural Egypt that can be considered an integrated socio-economic system. The following criteria will be taken into consideration:

1. For scientific monitoring and evaluation of the project the unit should be clearly identifiable, in an integrated socio-economic system. This condition is difficult to be met in our Egyptian village so an agglomeration of villages stands a better chance.

2. It should be related to the essential determinants of integrated rural development in Egypt.

b) Size of the Unit Study

An average population of 5000 to 10000 individuals with an agricultural land of 4 to 5 thousand faddan would come under a domain of a local council.

Nutritional Indices and Indicators for Development

a) Nutritional Indices

L. Dietary survey.

2. Rate of growth.

3. Biochemical indices (haemoglobin levels and plasma albumin and free amino acid and trace elements).

4. Limiting amino acid.

b) Development Indicators

1. Mortality levels.
2. Age-specific birth rate.
3. Labour force.
4. Eradication of illiteracy.
5. Appropriate vocational training.
6. Public awareness of objective of development.
7. Better service availability (health, education, housing).

Research Plan and Phasing

This study is expected to run in several phases. We are here concerned with the first phase aiming to establish competency in conducting various aspects of the project. Final formulation of the project in conjunction with U.S. consultants would be fulfilled during the early period of the first phase. Following successful completion of the first phase the main body of the proposed project will commence and continue.

The first period of one year of phase I (18-24 months) is to implement the following:

1. With U.S. consultation to finalize the project (6-8 m.)

2. Purchase, procurement, transport, installations of equipment (Annex I).

3. Training participants to develop routine methods to be utilized in the project.

4. Preliminary studies for selecting the site of study according to criteria mentioned.

NRC Personnel Resources/Capabilities

A. Personnel expected to participate in the project are as follows:

1. 15 Professors
2. 46 Associate Professors
3. 76 Researchers
4. 177 Research Assistants

(In various disciplines selected to the project).

B. Equipment is greatly defficient and since 1964 no major replacement has taken place.

N.B. It is suggested that the pilot plant for food technology and the experimental farm would be studied during phase I and implemented in phase II.

LABORATORY EQUIPMENT

(More and Better Food)

I- Equipments for the production, concentration and preservation of proteins and protein concentrates.

	Quantity
1- Reverse osmosis, Lab. type with membranes and suitable pressure pump.	1
The equipment will be used in the separation and concentration of proteins from waste fluids from Food and dairy Industries, protein extract..etc. Capacity 60-100 L/h or less if available.	
2- Preparative ultracentrifuge, up to 100,000 G with different heads, 10-250 ml tube.	1
The equipment will be used in the separation of proteins from different sources by sedimentation.	
3- Laboratory fermentor, with variable adjustment for pH, oxygen and temperature, capacity 1 L.	1
The fermentor will be used in the experimental work for the production of single cell proteins using wastes of farm and food industries.	
4- Incubator with shaker	1
To be used in experiments for the batch production of single cell proteins.	
5- Freeze drier	1
For drying temperature sensitive proteins.	
6- Spray drier	1
7- Laboratory tray drier (8 -rack, 16 tray producer)	1
8- Stage air compressor (50 h)	2

BEST AVAILABLE DOCUMENT

Quantity

Item 6, 7 and 8 will be used in the drying of protein cencentrates, and ~~dried~~ food preparations.

9- Deep freeze Ca 20 cu ft. 1

for preservation of isolated proteins in solutions.

II- Equipments for protein analysis.

The aim of the project as a whole is to improve the quality and to increase the quantity of protein rich foods. Therefore, it is necessary to establish a laboratory for protein analysis. The following equipments can be considered as a millstone for this purpose.

1- Separation and quantitative determination of proteins and peptides by gel filtration and ion exchange Chromatography.

For this purpose the following parts are needed to bild suitable equipment of different uses.

a- Chromatographic columns for gel filtration, ion exchange chromatography of different sizes with standard accessories. 12

b- Teflon tubing with different inside diameter 1, 2 and 3 mm. 200 m

c- Peristaltic pump to give a continuous flow at constant rate of the eluting solvent. 2

d- Fractional collector, for time, drop and volumetric capabilities. 2

e- Continuous flow UV absorpimeter at 280 nm to follow the proteins in the eluting buffers. 1

f- Recorder to be connected to the absorpimeter (50 chart rolls are needed). 1

Quantity

2- Separation and characterization of proteins and peptides by electrophoresis.

Electrophoretic apparatus are indespensible tools in studies related to the separation and characteri--zation of proteins. The following are needed

a- Microzone electrophoretic apparatus for protein separation on cellulose acetate, immunoelectrophoresis, complete with all accessories. 1

b- High voltage paper electrophoresis, for analysis of peptides, protein hydrolysates 1

c- E.C. vertical electrophoresis equipments for gel electrophoresis. 1

3- Determination of the physical parameters of proteins protein protein interactions, and their interaction with small molecules and ions. 1

For this purpose the following is needed.

a- Analytical ultracentrifuge 1

4- Amino acid analysis.

For quantitative determination of amino acids in plants, foods, feedstuffs and isolated proteins. The following apparatus is needed.

Amino acid analyzer 6-12 samples/day with integrator and complete with packing material, ninhydrin, buffer salts and sharts. 1

5- Hollow fiber dialyzer 2

For rapid and efficient separation of ions and small molecules from protein solutions.

Quantity

6- Micropipettes For application of samples for protein analysis.

Micropipette	2	ul	12
"	5	ul	12
"	10	ul	12
"	25	ul	12
"	50	ul	12

III- Equipments for analysis of Food and Feedstuffs.

1- Automated Kjeldahl autoanalyzer 1

For quantitative determination of proteins in plants, foods and feedstuffs... etc by Kjeldahl method.

2- Technicon milk analyzer, for quantitative determination of fat, protein and lactose content of milk. 1

3- Gas chromatographic apparatus with flame ionization detector, temperature programming and different exchangable packed columns, provided with hydrogen gas generator and integrator. 1

For the analysis of fatty acids, carbohydrates and flavors of foods and feedstuffs.

4- Thin layer chromatographic apparatus, complete 1

For the separation and characterization of classes of lipids, phospholipids... etc.

5- Atomic absorption spectrophotometer. 1

For the determination of trace elements in foods and feedstuffs.

6- Liquid sentillation counter. 1

Determination of isotops in soil, plants, foods and their metabolites.

	Quantity
7- UV and visible spectrophotometer, range 200 - 1000 nm, digital.	1
To be used in the spectrophotometric analysis of foods and feedstuffs.	
8- Moisture tester automatic.	1
for rapid determination of moisture content in foods and feedstuffs.	
9- Electronic polarimeter	1
for rapid determination of sugars and carbohydarates	
10- Viscometer, recording apparatus.	1
11- Equipments for testing the properties of dough	
a- Farinograph	1
b- Alveograph	1
c- Extensograph	1
12- Recording fluorimeter fluorimetric analysis of foods, ie., some vitamins	1
13- Warburg apparatus	1
for manometric analysis, fat oxidation...etc	
14- Calorimeter	1
Determination of the calorific value of foods and feedstuffs.	
15- Automatic recording titrator	1
for volumetric analysis.	

IV- Equipments for general laboratory uses.

1- Electric drying oven.	2

	Quantity
2- Electric muffle furnace	2
3- Calculators, Scientific	6
4- Cooling centrifuge, 10,000 G	1
5- Deionizer, Cap 60 L/h	6
6- Electric balance, cap 200 g, 0.0001 g digital	4
7- pH meter, digital, expanded scale 0.01 unit with different electrodes.	3
8- Incubators	2
9- Refrigerated incubator	1
10- Vacuum pump, portable	3
11- Hot plates	3
12- Basket centrifuge	1
13- Serval omnimixer	1
14- Laboratory air classifier	1
15 Hydrogenation autoclave	1
16- Laboratory fractional distillator	1
17- Molecular distillation apparatus	1
18- Abe refractometer	1
19- Ultrathermostat	2
20- Ultraturrax stirrer	1
21- Mills, bench type	2
22- Shaker	2
23- Vacuum oven, range 20-150°C	1
24- Binocular microscope, regul objective 8 oil emersion	1
25- Stereo binocular microscope, magnification till 40	1

	Quantity
26- Self indicating baranger-type balance, 50 kg, senst. 5 g.	1
27- Torsion balance, self indicating, cap 5 g senst 10 mg	1
28- Refrigerator ca. 30 cu ft	1
29- Alpine kolloplex flour mill	1
30 Typewriter	2
31- Water bath	3

SAMPLE LIST OF R & D PROJECTS	Equipment Needs (est.)	
	U.S.$	LE
1. Project for the study of the pollution of the Egyptian shore, and seas		
2. The underground water reservoir in the agriculture extension area West of Nile Delta	470,000	330,000
3. Water resources in the Mediterranean coastal zone, West of Alexandria	100,000	70,000
4. Determination of safe yield from underground water reservoir in the Nile Delta and Valley	100,000	70,000
5. The consequence of the loss of silt, as a result of the high dam on the characteristics of different soils and their fertilizer requirements.	30,700	21,500
6. Effects of changing the irrigation systems on soils of Upper Egypt with particular reference to the formerly Basin-irrigated areas.	25,700	18,000
7. Studies on the Agriculture horizontal development projects on the different textured soils	21,400	15,000
8. Effects of excessive use of irrigation waters, magnitude and influences on agricultural production.	5,700	4,000

Details of these and other illustrative research projects are available at the Mission.

Narrative Summary	Objectively Verifiable Induction	Means of Verification	Assumptions
GOAL To reorient the scientific and technical research community towards those types of research which are of priority importance and are applicable to solving national development problems.	The initial two years of activity under the project would be a complex program design effort. The only measurement of goal achievement as it relates to the GOE commitment to reorient the scientific and technical research community would be the assessed capability and determination of the GOE to undertaken the long term program which will be designed as a result of the first two year effort.		1. That GOE will remain committed to reorienting its scientific and research community to development concerns.
PURPOSE To improve the institutional capability of the Egyptian S/T community to develop and manage research programs to solve priority development problems.	END OF PROJECT STATUS 1. Sufficient data will have been made available to design a long term project which will: (a) reorient GOE policies and expenditures toward applied research; (b) provide measurable impact on the solution of key development problems. 2. Long-term project design completed.		That the ASRT and the NRC are the logical institutional entities to undertake the coordination necessary to reorient Egyptian research efforts.
	MEANS OF VERIFICATION Within two years a survey evaluation will be conducted using a combined team of independent Egyptian-U.S. personnel. They will assess: (1) The extent to which project inputs have resulted in a core of trained personnel who are committed to the concept of reorienting the research community to research applied to priority development problems; (2) The ability of the ASRT to act as a coordinating agent to mount interagency and interdisciplinary projects and programs which investigate these development problems; (3) The probable effectiveness and usefulness of the research conducted during the first 2 years in terms of addressing these problems; (4) The effectiveness of ASRT to act as a focal point for scientific information in Egypt and; They will also suggest: A design for a long term program.		

Narrative Summary	Objectively Verifiable Induction	Means of Verification	Assumptions
OUTPUTS 1. Staff trained in research management and policy planning with a focus on: Project Staffing and Monitoring. a. Management of scientific personnel. b. Management of scientific equipment. c. End use orientation of applied research. 2. Applied Research and Development projects - targeted at critical national development needs: Providing preliminary results. 3. Large scale demonstration projects underway which will involve interdisciplinary and interagency coordination in order to investigate complex development problems. 4. A national scientific and technical information system designed and first operational steps taken.	MAGNITUDE OF OUTPUTS 1. Trained Personnel: 15 - Prog. Monitors (10 assigned); 12 - Policy Planners (8 assigned); 5 - Marketing (Mgmt policies); 60 - Workshop members; 150 - Demonstration Project Personnel (100/50); 50 Research Project Personnel (10 each); 10 - Equipment Techs; 20 - Information Specialists (STI). 2. Five applied research and development projects underway and providing preliminary findings. 3. Two large scale interagency coordinated demonstration projects underway. 4. Information system being installed.	Normal project management, monitoring of PPT, and end of project survey evaluation.	
INPUTS 1. Technical advisory services to ASRT and NRC. 2. Training programs in Egypt and the United States. 3. Commodities. 4. Basic information package.	INPUT INDICATORS See detailed budget.	Monitoring of PPT.	

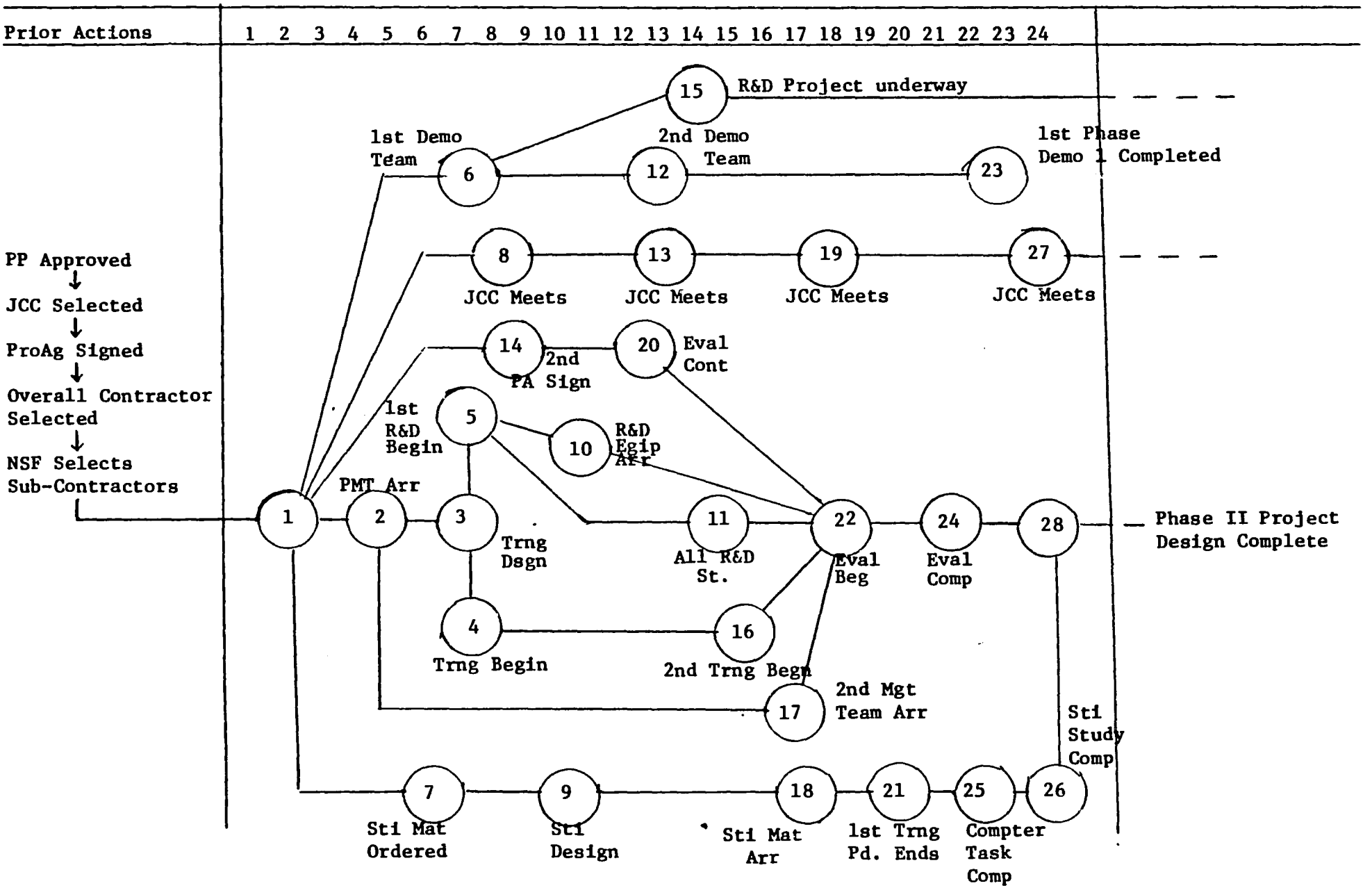
Prior Actions
1 2 3 4 5 6 7 8 9 10 11 12 13 14 15 16 17 18 19 20 21 22 23 24
PP Approved
JCC Selected
ProAg Signed
Overall Contractor Selected
NSF Selects Sub-Contractors
15 R&D Project underway
1st Demo Team
6
2nd Demo Team
12
23
1st Phase Demo 1 Completed
8 JCC Meets
13 JCC Meets
19 JCC Meets
27 JCC Meets
14 2nd PA Sign
20 Eval Cont
1st R&D Begin
5
10 R&D Egip Arr
PMT Arr
1
2
3
Trng Dsgn
11 All R&D St.
22 Eval Beg
24 Eval Comp
28
Phase II Project Design Complete
4 Trng Begin
16 2nd Trng Begin
17 2nd Mgt Team Arr
Sti Study Comp
7 Sti Mat Ordered
9 Sti Design
18 Sti Mat Arr
21 1st Trng Pd. Ends
25 Compter Task Comp
26

Country	Project No.	Project Title	Date	Original Revision #	Approved

Project Purpose (From PRP Facesheet)

To improve the institutional capability of the Egyptian S/T community to develop and manage research programs to solve priority development problems.

CPI Description

Prior Actions:

Project Paper approved
JCC members selected
Project agreement signed
Prime contractor selected
NSF selects STI sub-contractors

---

1. NRC & ASRT advisors arrive
2. NRC & ASRT policy, management teams arrive
3. ASRT, NRC, policy management training plan designed
4. Training management policy program begins
5. First R&D projects approved
6. Demonstration I project team arrives
7. Information team (materials) identifies needs
8. First meeting JCC
9. STI design team completes work
10. First R&D project equipment arrives
11. Remainder R&D projects (ASRT) underway
12. Equipment for demonstration project (1) arrives
13. Second meeting JCC
14. Project agreement (yr. 2) signed
15. Demonstration project (II) designed, approved, including training, equipment plan.
16. Second tranche training begins
17. Second ASRT, NRC policy, management teams arrive
18. STI materials delivery begins
19. Third meeting JCC
20. Evaluation contract signed
21. STI training completed
22. Evaluation begun, S&T, STI
23. Demonstration project (I), first phase completed, data available, Phase II designed
24. Evaluation completed
25. Computer access task completed
26. Design STI (II) completed
27. Fourth meeting JCC
28. Design phase II completed

CRITICAL PERFORMANCE INDICATOR (CPI) DESCRIPTION

BEST AVAILABLE DOCUMENT

AID HANDBOOK 3, App 6C	3:11	November 10, 1976	6C(1)-1

6C(1) - COUNTRY CHECKLIST

Listed below are, first, statutory criteria applicable generally to FAA funds, and then criteria applicable to individual fund sources: Development Assistance and Security Supporting Assistance funds.

A. GENERAL CRITERIA FOR COUNTRY

1. FAA Sec. 116. Can it be demonstrated that contemplated assistance will directly benefit the needy? If not, has the Department of State determined that this government has engaged in consistent pattern of gross violations of internationally recognized human rights?	Not all contemplated assistance will directly benefit the needy. The Department of State has made no determination that the GOE has engaged in a gross violation of human rights.
2. FAA Sec. 481. Has it been determined that the government of recipient country has failed to take adequate steps to prevent narcotics drugs and other controlled substances (as defined by the Comprehensive Drug Abuse Prevention and Control Act of 1970) produced or processed, in whole or in part, in such country, or transported through such country, from being sold illegally within the jurisdiction of such country to U.S. Government personnel or their dependents, or from entering the U.S. unlawfully?	No.
3. FAA Sec. 620(a). Does recipient country furnish assistance to Cuba or fail to take appropriate steps to prevent ships or aircraft under its flag from carrying cargoes to or from Cuba?	No instance of any such present course of conduct is known.
4. FAA Sec. 620(b). If assistance is to a government, has the Secretary of State determined that it is not controlled by the International Communist movement?	The Secretary of State has so determined.
5. FAA Sec. 620(c). If assistance is to government, is the government liable as debtor or unconditional guarantor on any debt to a U.S. citizen for goods or services furnished or ordered where (a) such citizen has exhausted available legal remedies and (b) debt is not denied or contested by such government?	None of the known claims of any US citizen asserted against the GOE meet the criteria of this section. In any event, Egypt participated with the US in a joint commission to discuss debts of Egypt to US citizens and has agreed with the USG on an amount which the GOE will pay to settle these debts.
6. FAA Sec. 620(e) (1). If assistance is to a government, has it (including government agencies or subdivisions) taken any action which has the effect of nationalizing, expropriating, or otherwise seizing ownership or control of property of U.S. citizens or entities beneficially owned by them without taking steps to discharge its obligations toward such citizens or entities?	The Secretary of State has determined that Egypt's agreement to establish a Joint Commission to discuss compensation of American nationals constitutes taking appropriate steps for the purpose of this section.

A

7. FAA Sec. 620(f); App. Sec. 108. Is recipient country a Communist country? Will assistance be provided to the Democratic Republic of Vietnam (North Vietnam), South Vietnam, Cambodia or Laos?	Egypt is not a communist country.
8. FAA Sec. 620(i). Is recipient country in any way involved in (a) subversion of, or military aggression against, the United States or any country receiving U.S. assistance, or (b) the planning of such subversion or aggression?	The President has not determined that the recipient country is involved in such conduct.
9. FAA Sec. 620(j). Has the country permitted, or failed to take adequate measures to prevent, the damage or destruction, by mob action, of U.S. property?	The President, in accordance with the requirement of section 620 (j), has considered terminating assistance to Egypt and has determined that no sufficient reason exists not to furnish the assistance.
10. FAA Sec. 620(l). If the country has failed to institute the investment guaranty program for the specific risks of expropriation, inconvertibility or confiscation, has the AID Administrator within the past year considered denying assistance to such government for this reason?	Egypt has reactivated its Investment Guaranty Agreement with the U.S.
11. FAA Sec. 620(o); Fishermen's Protective Act, Sec. 5. If country has seized, or imposed any penalty or sanction against, any U.S. fishing activities in international waters,	No instance of any such seizure or imposition of such penalty or sanction is now known.
a. has any deduction required by Fishermen's Protective Act been made?	Not applicable.
b. has complete denial of assistance been considered by AID Administrator?	Not applicable.
12. FAA Sec. 620(q); App. Sec. 504. (a) Is the government of the recipient country in default on interest or principal of any AID loan to the country? (b) Is country in default exceeding one year on interest or principal on U.S. loan under program for which App. Act appropriates funds, unless debt was earlier disputed, or appropriate steps taken to cure default?	No such default exists. Reconciliation is taking place between the books of AID and the Government of Egypt in regard to several very minor amounts.
13. FAA Sec. 620(s). What percentage of country budget is for military expenditures? How much of foreign exchange resources spent on military equipment? How much spent for the purchase of sophisticated weapons systems? (Consideration of these points is to be coordinated with the Bureau for Program and Policy Coordination, Regional Coordinators and Military Assistance Staff (PPC/RC).)	The President has taken into account each of the listed considerations as to current military expenditures by the GOE and has determined that these do not inhibit economic aid to Egypt but rather that the projected program contributes to the underlying intent of the FAA which seeks to reduce arms costs and to stimulate economic development.

A

14. FAA Sec. 620(t). Has the country severed diplomatic relations with the United States? If so, have they been resumed and have new bilateral assistance agreements been negotiated and entered into since such resumption?

Egypt severed diplomatic relations with the U.S. in 1967. Diplomatic relations have now been resumed. New bilateral assistance agreements have been entered into since such resumption.

15. FAA Sec. 620(u). What is the payment status of the country's U.N. obligations? If the country is in arrears, were such arrearages taken into account by the AID Administrator in determining the current AID Operational Year Budget?

Egypt has paid all of its outstanding U.N. obligations.

16. FAA Sec. 620A. Has the country granted sanctuary from prosecution to any individual or group which has committed an act of international terrorism?

No.

17. FAA Sec. 666. Does the country object, on basis of race, religion, national origin or sex, to the presence of any officer or employee of the U.S. there to carry out economic development program under FAA?

No.

18. FAA Sec. 669. Has the country delivered or received nuclear reprocessing or enrichment equipment, materials or technology, without specified arrangements on safeguards, etc.?

No.

19. FAA Sec. 901. Has the country denied its citizens the right or opportunity to emigrate?

No.

B. FUNDING CRITERIA FOR COUNTRY

1. Development Assistance Country Criteria

Not applicable.

a. FAA Sec. 102(c), (d). Have criteria been established, and taken into account, to assess commitment and progress of country in effectively involving the poor in development, on such indexes as: (1) small-farm labor intensive agriculture, (2) reduced infant mortality, (3) population growth, (4) equality of income distribution, and (5) unemployment.

b. FAA Sec. 201(b)(5), (7) & (8); Sec. 208; 211(a)(4), (7). Describe extent to which country is:

(1) Making appropriate efforts to increase food production and improve means for food storage and distribution.

(2) Creating a favorable climate for foreign and domestic private enterprise and investment.

B1b

(3) Increasing the public's role in the developmental process.

(4) (a) Allocating available budgetary resources to development.

(b) Diverting such resources for unnecessary military expenditure and intervention in affairs of other free and independent nations.

(5) Making economic, social, and political reforms such as tax collection improvements and changes in land tenure arrangements, and making progress toward respect for the rule of law, freedom of expression and of the press, and recognizing the importance of individual freedom, initiative, and private enterprise.

(6) Otherwise responding to the vital economic, political, and social concerns of its people, and demonstrating a clear determination to take effective self-help measures.

c. FAA Sec. 201(b), 211(a). Is the country among the 20 countries in which development assistance loans may be made in this fiscal year, or among the 40 in which development assistance grants (other than for self-help projects) may be made?

d. FAA Sec. 115. Will country be furnished, in same fiscal year, either security supporting assistance, or Middle East peace funds? If so, is assistance for population programs, humanitarian aid through international organizations, or regional programs?

2. Security Supporting Assistance Country Criteria

a. FAA Sec. 502B. Has the country engaged in a consistent pattern of gross violations of internationally recognized human rights? Is program in accordance with policy of this Section?

(1) No.

(2) Yes.

b. FAA Sec. 531. Is the Assistance to be furnished to a friendly country, organization, or body eligible to receive assistance?

Yes.

c. FAA Sec. 609. If commodities are to be granted so that sale proceeds will accrue to the recipient country, have Special Account (counterpart) arrangements been made?

Not applicable

6C(2) - PROJECT CHECKLIST

Listed below are, first, statutory criteria applicable generally to projects with FAA funds, and then project criteria applicable to individual fund sources: Development Assistance (with a sub-category for criteria applicable only to loans); and Security Supporting Assistance funds.

CROSS REFERENCES: IS COUNTRY CHECKLIST UP TO DATE? IDENTIFY. HAS STANDARD ITEM CHECKLIST BEEN REVIEWED FOR THIS PROJECT?

A. GENERAL CRITERIA FOR PROJECT.

1. App. Unnumbered; FAA Sec. 653(b)

   (a) Describe how Committees on Appropriations of Senate and House have been or will be notified concerning the project; (b) is assistance within (Operational Year Budget) country or international organization allocation reported to Congress (or not more than $1 million over that figure plus 10%)?

   (a) An "Advice of Program Change," has been prepared for transmittal to Congress. Obligations for the project will not take place prior to 15 days after date of delivery of this notification. (b) The intended obligation for the project is within the level of funds appropriated for Egypt for FY77.

2. FAA Sec. 611(a)(1). Prior to obligation in excess of $100,000, will there be (a) engineering, financial, and other plans necessary to carry out the assistance and (b) a reasonably firm estimate of the cost to the U.S. of the assistance?

   (a): Yes. (b): Yes. As the purpose of the project is to improve institutional capabilities, research subprojects are not subject to the requirements of Sec. 611 (a)(1).

3. FAA Sec. 611(a)(2). If further legislative action is required within recipient country, what is basis for reasonable expectation that such action will be completed in time to permit orderly accomplishment of purpose of the assistance?

   No further legislative action is required to implement the program than action ratifying the signed project agreement.

4. FAA Sec. 611(b); App. Sec. 101. If for water or water-related land resource construction, has project met the standards and criteria as per Memorandum of the President dated Sept. 5, 1973 (replaces Memorandum of May 15, 1962; see Fed. Register, Vol 38, No. 174, Part III, Sept. 10, 1973)?

   Not applicable. Project is not for water or water-related land resource construction.

5. FAA Sec. 611(e). If project is capital assistance (e.g., construction), and all U.S. assistance for it will exceed $1 million, has Mission Director certified the country's capability effectively to maintain and utilize the project?

   Not applicable. Not a capital assistance project.

A.

6. FAA Sec. 209, 619. Is project susceptible of execution as part of regional or multilateral project? If so why is project not so executed? Information and conclusion whether assistance will encourage regional development programs. If assistance is for newly independent country, is it furnished through multilateral organizations or plans to the maximum extent appropriate?

The project is not susceptible of executic as part of a regional or multilateral project. Assistance is not expected to encourage regional development programs although there may be minor regional benefits. Egypt is not a newly independen country.

7. FAA Sec. 601(a); (and Sec. 201(f) for development loans). Information and conclusions whether project will encourage efforts of the country to: (a) increase the flow of international trade; (b) foster private initiative and competition; (c) encourage development and use of cooperatives, credit unions, and savings and loan associations; (d) discourage monopolistic practices; (e) improve technical efficiency of industry, agriculture and commerce; and (f) strengthen free labor unions.

Since project goal is to make applied scie and technology research more user-oriented and directed to national development proble the project is expected to lead ultimately to improved technical efficiency in industry, agriculture and related service fields.

8. FAA Sec. 601(b). Information and conclusion on how project will encourage U.S. private trade and investment abroad and encourage private U.S. participation in foreign assistance programs (including use of private trade channels and the services of U.S. private enterprise).

All commodities and services will have thei source and origin in the U.S. All commodities and most services will be procured from US private enterprise.

9. FAA Sec. 612(b); Sec. 636(h). Describe steps taken to assure that, to the maximum extent possible, the country is contributing local currencies to meet the cost of contractual and other services, and foreign currencies owned by the U.S. are utilized to meet the cost of contractual and other services.

The project agreement will so provide.

10. FAA Sec. 612(d). Does the U.S. own excess foreign currency and, if so, what arrangements have been made for its release?

Yes. Release by the GOE is not a problem at present.

B. FUNDING CRITERIA FOR PROJECT

1. Development Assistance Project Criteria

a. FAA Sec. 102(c); Sec. 111; Sec. 281a. Extent to which activity will (a) effectively involve the poor in development, by extending access to economy at local level, increasing labor-intensive production, spreading investment out from cities to small towns and rural areas; and (b) help develop cooperatives, especially by technical assistance, to assist rural and urban poor to help themselves toward better life, and otherwise encourage democratic private and local governmental institutions?

Not applicable.

B1

b. FAA Sec. 103, 103A, 104, 105, 106, 107. Is assistance being made available: [include only applicable paragraph -- e.g., a, b, etc. -- which corresponds to source of funds used. If more than one fund source is used for project, include relevant paragraph for each fund source.]

(1) [103] for agriculture, rural development or nutrition; if so, extent to which activity is specifically designed to increase productivity and income of rural poor; [103A] if for agricultural research, is full account taken of needs of small farmers;

(2) [104] for population planning or health; if so, extent to which activity extends low-cost, integrated delivery systems to provide health and family planning services, especially to rural areas and poor;

(3) [105] for education, public administration, or human resources development; if so, extent to which activity strengthens nonformal education, makes formal education more relevant, especially for rural families and urban poor, or strengthens management capability of institutions enabling the poor to participate in development;

(4) [106] for technical assistance, energy, research, reconstruction, and selected development problems; if so, extent activity is:

(a) technical cooperation and development, especially with U.S. private and voluntary, or regional and international development, organizations;

(b) to help alleviate energy problem;

(c) research into, and evaluation of, economic development processes and techniques;

(d) reconstruction after natural or manmade disaster;

(e) for special development problem, and to enable proper utilization of earlier U.S. infrastructure, etc., assistance;

(f) for programs of urban development, especially small labor-intensive enterprises, marketing systems, and financial or other institutions to help urban poor participate in economic and social development.

B1

(5) [107] by grants for coordinated private effort to develop and disseminate intermediate technologies appropriate for developing countries.

c. FAA Sec. 110(a); Sec. 209(e). Is the recipient country willing to contribute funds to the project, and in what manner has or will it provide assurances that it will provide at least 25% of the costs of the program, project, or activity with respect to which the assistance is to be furnished (or has the latter cost-sharing requirement been waived for a "relatively least-developed" country)?

d. FAA Sec. 110(b). Will grant capital assistance be disbursed for project over more than 3 years? If so, has justification satisfactory to Congress been made, and efforts for other financing?

e. FAA Sec. 207; Sec. 113. Extent to which assistance reflects appropriate emphasis on; (1) encouraging development of democratic, economic, political, and social institutions; (2) self-help in meeting the country's food needs; (3) improving availability of trained worker-power in the country; (4) programs designed to meet the country's health needs; (5) other important areas of economic, political, and social development, including industry; free labor unions, cooperatives, and Voluntary Agencies; transportation and communication; planning and public administration; urban development, and modernization of existing laws; or (6) integrating women into the recipient country's national economy.

f. FAA Sec. 281(b). Describe extent to which program recognizes the particular needs, desires, and capacities of the people of the country; utilizes the country's intellectual resources to encourage institutional development; and supports civic education and training in skills required for effective participation in governmental and political processes essential to self-government.

B1

g. FAA Sec. 201(b)(2)-(4) and -(8); Sec. 201(e); Sec. 211(a)(1)-(3) and -(8). Does the activity give reasonable promise of contributing to the development: of economic resources, or to the increase of productive capacities and self-sustaining economic growth; or of educational or other institutions directed toward social progress? Is it related to and consistent with other development activities, and will it contribute to realizable long-range objectives? And does project paper provide information and conclusion on an activity's economic and technical soundness?

h. FAA Sec. 201(b)(6); Sec. 211(a)(5), (6) Information and conclusion on possible effects of the assistance on U.S. economy, with special reference to areas of substantial labor surplus, and extent to which U.S. commodities and assistance are furnished in a manner consistent with improving or safeguarding the U.S. balance-of-payments position

2. Development Assistance Project Criteria (Loans only) — Not applicable.

a. FAA Sec. 201(b)(1). Information and conclusion on availability of financing from other free-world sources, including private sources within U.S.

b. FAA Sec. 201(b)(2); 201(d). Information and conclusion on (1) capacity of the country to repay the loan, including reasonableness of repayment prospects, and (2) reasonableness and legality (under laws of country and U.S.) of lending and relending terms of the loan.

c. FAA Sec. 201(e). If loan is not made pursuant to a multilateral plan, and the amount of the loan exceeds $100,000, has country submitted to AID an application for such funds together with assurances to indicate that funds will be used in an economically and technically sound manner?

d. FAA Sec. 201(f). Does project paper describe how project will promote the country's economic development taking into account the country's human and material resources requirements and relationship between ultimate objectives of the project and overall economic development?

e. FAA Sec. 202(a). Total amount of money under loan which is going directly to private enterprise, is going to intermediate credit institutions or other borrowers for use by private enterprise, is being used to finance imports from private sources, or is otherwise being used to finance procurements from private sources?

f. FAA Sec. 620(d). If assistance is for any productive enterprise which will compete in the U.S. with U.S. enterprise, is there an agreement by the recipient country to prevent export to the U.S. of more than 20% of the enterprise's annual production during the life of the loan?

3. Project Criteria Solely for Security Supporting Assistance

FAA Sec. 531. How will this assistance support promote economic or political stability?

This assistance will promote economic stability by increasing the efficiency of funds used for science and technology research in Egypt and, ultimately, contribute to increasing the options available to Egypt in deciding the allocation of development resources.

4. Additional Criteria for Alliance for Progress

[Note: Alliance for Progress projects should add the following two items to a project checklist.]

a. FAA Sec. 251(b)(1), -(8). Does assistance take into account principles of the Act of Bogota and the Charter of Punta del Este; and to what extent will the activity contribute to the economic or political integration of Latin America?

b. FAA Sec. 251(b)(8); 251(h). For loans, has there been taken into account the effort made by recipient nation to repatriate capital invested in other countries by their own citizens? Is loan consistent with the findings and recommendations of the Inter-American Committee for the Alliance for Progress (now "CEPCIES," the Permanent Executive Committee of the OAS) in its annual review of national development activities?

4. Not applicable

6C(3) - STANDARD ITEM CHECKLIST

Listed below are statutory items which normally will be covered routinely in those provisions of an assistance agreement dealing with its implementation, or covered in the agreement by exclusion (as where certain uses of funds are permitted, but other uses not).

These items are arranged under the general headings of (A) Procurement, (B) Construction, and (C) Other Restrictions.

A. Procurement

1. FAA Sec. 602. Are there arrangements to permit U.S. small business to participate equitably in the furnishing of goods and services financed?	Procurement of goods and services will be pursuant to established AID regulations.
2. FAA Sec. 604(a). Will all commodity procurement financed be from the U.S. except as otherwise determined by the President or under delegation from him?	Yes.
3. FAA Sec. 604(d). If the cooperating country discriminates against U.S. marine insurance companies, will agreement require that marine insurance be placed in the U.S. on commodities financed?	Yes.
4. FAA Sec. 604(e). If offshore procurement of agricultural commodity or product is to be financed, is there provision against such procurement when the domestic price of such commodity is less than parity?	There will be no such procurement.
5. FAA Sec. 603(a). Will U.S. Government excess personal property be utilized wherever practicable in lieu of the procurement of new items?	Consideration will be given to the use of excess property when practical.
6. IMA Sec. 901(b). (a) Compliance with requirement that at least 50 per centum of the gross tonnage of commodities (computed separately for dry bulk carriers, dry cargo liners, and tankers) financed shall be transported on privately owned U.S.-flag commercial vessels to the extent that such vessels are available at fair and reasonable rates.	Yes.
7. FAA Sec. 621. If technical assistance is financed, will such assistance be furnished to the fullest extent practicable as goods and professional and other services from private enterprise on a contract basis? If the facilities of other Federal agencies will be utilized,	The National Academy of Sciences and the National Science Foundation have predominant capabilities in rendering national science policy assistance. They will subcontract with US private enterprise to the extent that the required technical specialties are available through US private enterprise. Such subcontracts are expected to be substantial. In any case, their domestic requirements are expected to preclude the

A2

are they particularly suitable, not competitive with private enterprise, and made available without undue interference with domestic programs?	provision of a major portion of the technical experts required. See Part IV of the Project Paper -- Implementation Arrangements.
8. International Air Transport. Fair Competitive Practices Act, 1974 If air transportation of persons or property is financed on grant basis, will provision be made that U.S.-flag carriers will be utilized to the extent such service is available?	Yes.
B. Construction	
1. FAA Sec. 601(d). If a capital (e.g., construction) project, are engineering and professional services of U.S. firms and their affiliates to be used to the maximum extent consistent with the national interest?	Not applicable.
2. FAA Sec. 611(c). If contracts for construction are to be financed, will they be let on a competitive basis to maximum extent practicable?	No construction is to be financed.
3. FAA Sec. 620(k). If for construction of productive enterprise, will aggregate value of assistance to be furnished by the U.S. not exceed $100 million?	Not applicable.
C. Other Restrictions	
1. FAA Sec. 201(d). If development loan, is interest rate at least 2% per annum during grace period and at least 3% per annum thereafter?	Not applicable.
2. FAA Sec. 301(d). If fund is established solely by U.S. contributions and administered by an international organization, does Comptroller General have audit rights?	Not applicable.
3. FAA Sec. 620(h). Do arrangements preclude promoting or assisting the foreign aid projects or activities of Communist-Bloc countries, contrary to the best interests of the U.S.?	The project agreement will so stipulate.
4. FAA Sec. 636(i). Is financing not permitted to be used, without waiver, for purchase, long-term lease, or exchange of motor vehicle manufactured outside the U.S. or guaranty of such transaction?	Financing is not permitted to be used for such purposes.

C.

5. Will arrangements preclude use of financing:

a. FAA Sec. 114. to pay for performance of abortions or to motivate or coerce persons to practice abortions? — Yes.

b. FAA Sec. 620(a). to compensate owners for expropriated nationalized property? — Yes.

c. FAA Sec. 660. to finance police training or other law enforcement assistance, except for narcotics programs? — Yes.

d. FAA Sec. 662. for CIA activities? — Yes.

e. App. Sec. 103. to pay pensions, etc., for military personnel? — Yes.

f. App. Sec. 106. to pay U.N. assessments? — Yes.

g. App. Sec. 107. to carry out provisions of FAA Sections 209(d) and 251(h)? (transfer to multilateral organization for lending). — Yes.

h. App. Sec. 501. to be used for publicity or propaganda purposes within U.S. not authorized by Congress? — Yes.

BEST AVAILABLE DOCUMENT

ANNEX F

MINISTRY OF ECONOMY
AND ECONOMIC COOPERATION

Economic Cooperation Division
Office Of The Under Secretary

ACTION TO TA
ACTION TAKEN DATE 11/30
NAME INITIALS

cc 9 V
11/cc

Mr. D.S. Brown,
Director AID
U.S.A. Embassy, Cairo

Cairo 22 ,Nov. 1976

Dear Mr. Brown,

The Government of the Arab Republic of Egypt is desirous of carrying forward a program to improve the capacity of the scientific and technological research community to focus its resources on priority national development problems. This undertaking will extend over several years. The first phase of such an undertaking will be directed to improving the management of research resources in several ways including:

A - Assistance in scientific research and technology policy planning and management.

B - Support of research projects aiming at solving specific priority national development problems.

C - Provision of scientific equipment, and

D - Provision of a science and technical information system network.

The Government of the Arab Republic of Egypt therefore requests that AID provide up to $3.5 million and LE 800,000 to support the first phase of this program.

Best Regards,

Yours Faithfully,

GAMAL EL-NAZER
Under Secretary Of State
For Economic Cooperation

Request for Approval of Excess Local Currency

In order to achieve maximum benefit to Egypt from scarce A.I.D. dollar resources, approval is hereby requested for an allocation of U.S. Government owned excess Egyptian pounds, to be used in accordance with the budget estimates presented as Annex H to this Project Paper, under the Poage-Mondale Authority.

1. Advisor to the ASRT	Year 1	Year 2	Total
	$	$	$
Base Salary (12 MM)	40,000	42,000	82,000
Fringe Benefits (20%)	8,000	8,400	16,400
Post Allowance (10%)	4,000	4,200	8,200
Subtotal	52,000	54,600	106,600
Overhead (60%)	31,200	32,760	63,960
Subtotal	83,200	87,360	170,560
Storage of Effects	2,000	2,000	4,000
International Per Diem	350	350	700
U. S. Per Diem	450	450	900
Subtotal	2,800	2,800	6,600
TOTAL	$86,000	$90,160	$176,160

	Year 1	Year 2	Total
	L.E.	L.E.	L.E.
International Air Fare (6 RT)	2,100	2,100	4,200
Housing	10,000	10,000	20,000
Shipment of Goods	5,000	5,000	10,000
R&R	500	-	500
TOTAL	17,600	17,100	34,700

2. ASRT Consultant Teams	Year 1	Year 2	Total
	$	$	$
18 MM at $5,000 (consultants)	90,000	94,500	184,500
6 MM at $1,400 (clerical)	8,400	8,850	17,250
Subtotal	98,400	103,350	201,750
Overhead at 60%	59,040	61,950	120,990
Subtotal	157,440	165,300	322,740
Report Preparation (3 @ $1,500)	4,500	4,500	9,000
International Per Diem	1,250	1,250	2,500
TOTAL	163,190	171,050	334,240

		Year 1	Year 2	Total
		L.E.	L.E.	L.E.
Air Fares (9 RT)		6,300	6,300	12,600
Local Per Diem		14,800	14,800	29,600
TOTAL	L.E.	21,100	21,100	42,200

3. Advisor to the NRC	Year 1	Year 2	Total
	$	$	$
Base Salary (12 MM)	40,000	42,000	82,000
Fringe Benefits (20%)	8,000	8,400	16,400
Post Allowance (10%)	4,000	4,200	8,200
Subtotal	52,000	54,600	106,600
Overhead (60%)	31,200	32,760	63,960
Subtotal	83,200	87,360	170,560
Storage of Effects	2,000	2,000	4,000
International Per Diem	350	350	700
U. S. Per Diem	450	450	900
Subtotal	2,800	2,800	6,600
TOTAL	$86,000	$90,160	$176,160

	Year 1	Year 2	Total
	L.E.	L.E.	L.E.
International Air Fare (6 RT)	2,100	2,100	4,200
Housing	10,000	10,000	20,000
Shipment of Goods	5,000	5,000	10,000
R&R	500	-	500
TOTAL	17,600	17,100	34,700

4. NRC Consultant Teams	Year 1	Year 2	Total
	$	$	$
30 MM at $5,000 (consultants)	150,000	157,500	307,500
10 MM at $1,400 (clerical)	14,000	14,700	28,700
Subtotal	164,000	172,200	336,200
Overhead (60%)	98,400	103,320	201,720
Subtotal	262,400	275,520	537,920
Report Preparation (4 @ $1,500)	6,000	6,000	12,000
International Per Diem	1,500	1,500	3,000
TOTAL	269,900	283,020	552,920

	Year 1	Year 2	Total
	L.E.	L.E.	L.E.
Air Fares (12 RT)	8,400	8,400	16,800
Local Per Diem	29,100	29,100	58,200
TOTAL	37,500	37,500	75,000

5. Scientific and Technical Equipment	Year 1 $	Year 2 $	Total $
NRC - Basic Equipment	$1,000,000	$ 500,000	$1,500,000
Experimental Project	700,000	-	700,000
Academy Supported Institutions	300,000	2,000,000	2,300,000
TOTAL	$2,000,000	$2,500,000	$4,500,000

6. Contract Support to ASRT Supported Projects	Year 1 L.E.	Year 2 L.E.	Total L.E.
	150,000	200,000	350,000

7. ASRT Training in Egypt	Year 1	Year 2	Total
	$	$	$
9 MM at $5,000 (trainers)	$45,000	$47,250	$92,250
4 MM at $1,400 (clerical)	5,600	5,880	11,480
Subtotal	50,600	53,130	103,730
Overhead (60%)	30,360	31,870	62,230
Subtotal	80,960	85,000	165,960
Workshop materials (3 at $3,000)	9,000	9,000	18,000
International Per Diem (9 at $125)	1,125	1,125	2,250
TOTAL	$91,085	$95,125	$186,210

	Year 1	Year 2	Total
	L.E.	L.E.	L.E.
Air Fares (9 RT)	6,300	6,300	12,600
Local Per Diem	8,725	8,725	17,450
TOTAL	15,025	15,025	30,050

8. ASRT Training in U.S.	Year 1	Year 2	Total
	$	$	$
15 MM at $5,000 (trainers)	$75,000	$78,750	$153,750
5 MM at $1,400 (clerical)	7,000	7,350	14,350
Subtotal	82,000	86,100	168,100
Overhead (60%)	49,200	51,660	100,860
Subtotal	131,200	137,760	268,960
Training Materials (6 at $200)	1,200	1,200	2,400
U. S. Per Diem (720 days)	23,760	23,760	47,520
International Per Diem	750	750	1,500
TOTAL	$156,910	$163,470	$320,380

	Year 1	Year 2	Total
	L.E.	L.E.	L.E.
Air Fares (6 RT)	4,200	4,200	8,400

9. NRC Training in Egypt	Year 1	Year 2	Total
	$	$	$
9 MM at $5,000 (trainers)	45,000	47,250	92,250
4 MM at $1,400 (clerical)	5,600	5,880	11,480
Subtotal	50,600	53,130	103,730
Overhead (60%)	30,360	31,870	62,230
Subtotal	80,960	85,000	165,960
Workshop Materials (3 at $3,000)	9,000	9,000	18,000
International Per Diem	1,125	1,125	2,250
TOTAL	$91,085	$95,125	$186,210

	Year 1	Year 2	Total
	L.E.	L.E.	L.E.
Air Fares (9 RT)	6,300	6,300	12,600
Local Per Diem	8,725	8,725	17,450
TOTAL	15,025	15,025	30,050

10. NRC Training in U. S.	Year 1	Year 2	Total
	$	$	$
15 MM at $5,000 (trainers)	75,000	78,750	153,750
5 MM at $1,400 (clerical)	7,000	7,350	14,350
Subtotal	82,000	86,100	168,100
Overhead (60%)	49,200	5.660	100,860
Subtotal	131,200	137,760	268,960
Training Materials (8 at $200)	1,600	1,600	3,200
U. S. Per Diem (960 days)	31,680	31,680	63,360
International Per Diem	1,000	1,000	2,000
TOTAL	$165,480	$172,040	$337,520

	Year 1	Year 2	Total
	L.E.	L.E.	L.E.
Air Fares (8 RT)	5,600	5,600	11,200

11. Joint Consultative Committee	Year 1	Year 2	Total
	$	$	$
Support Staff			
2 MM at $5,000 (staff)	10,000	10,500	20,500
2 MM at $1,400 (clerical)	2,800	2,940	5,740
Subtotal	12,800	13,440	26,240
Overhead (60%)	7,680	8,065	15,745
Subtotal	20,480	21,505	41,985
U.S. Per Diem	1,000	1,000	2,000
International Per Diem	500	500	1,000
U.S. Air Fares	2,000	2,000	4,000
TOTAL	$23,980	$24,005	$47,985
Members			
3 MM at $5,000	15,000	15,750	30,750
U.S. Per Diem	750	750	1,500
International Per Diem	375	375	750
U.S. Air Fares	1,500	1,500	3,000
TOTAL	17,625	18,375	36,000
GRAND TOTAL	$41,605	$42,380	$83,985

	Year 1	Year 2	Total
	L.E.	L.E.	L.E.
Staff: Air Fares	2,800	2,800	5,600
Per Diem	1,000	1,000	2,000
Members: Air Fares	2,100	2,100	4,200
Per Diem	700	700	1,400
TOTAL	6,600	6,600	13,200

12. U. S. Project Support	Year 1	Year 2	Total
	$	$	$
12 MM at $5,000 (professional)	60,000	63,000	123,000
12 MM at $1,400 (clerical)	16,800	17,640	34,440
Subtotal	76,800	80,640	157,440
Overhead (60%)	46,080	48,385	94,465
	122,880	129,025	251,905
U.S. Air Fares	6,000	6,000	12,000
U.S. Per Diem (100 days)	3,300	3,300	6,600
Misc. U.S. Travel Costs	500	500	1,000
International Per Diem	250	250	500
Communications & Reports	7,000	7,000	14,000
TOTAL	$139,930	$146,075	$286,105

	Year 1	Year 2	Total
	L.E.	L.E.	L.E.
Air Fares (2 RT)	1,400	1,400	2,800
Per Diem	1,550	1,550	3,100
TOTAL	2,950	2,950	5,900

13. National ST Information Service	Year 1 $	Year 2 $	Total $
Design:			
42 MM @ $3,000	72,000	56,700	128,700
Overhead @ 30%	21,600	17,010	38,610
Equipment and Materials	15,000	5,000	20,000
Computer Use	7,000	3,000	10,000
Supply:			
5.5 MM (Subcontract)	25,000	-	25,000
Materials and Equipment (including Service)	215,000	100,000	315,000
Computer Access (Subcontract):	75,000	60,000	135,000
U.S. Training	40,000	35,000	75,000
International P.D.	3,000	2,000	5,000
TOTAL	$473,600	$278,710	$752,310

		Year 1 L.E.	Year 2 L.E.	Total L.E.
Air Fares (40 RT)		17,000	13,000	30,000
Local P.D. (60 MM)		36,000	24,500	60,500
Local Contracts		5,000	7,000	12,000
TOTAL	L.E.	58,000	44,500	102,500

A N N E X I

Bilateral Assistance from International Organizations

Organization	Institute and/or Project		Amount
UNDP	1. National Centre for Radiation and Technology		$1,327,700
	2. Atomic Energy Establishment		111,000
	3. National Research Centre		16,000
UNIDO*	Central Metallurgical Research and Development Institute:		
		Phase I	$ 463,700
		Phase II	1,850,000
UNESCO	1. Studying the Problem of Coastal Erosion:		
		Phase I	$1,073,620
		Phase II	913,000
	2. Scientific Instruments Centre:		
		Phase I	$ 151,140
		Phase II	1,050,000
	3. Marine Science		$ 115,000
IAEA	Egypt A E E		$ 492,750
			LE4,200,000
	TOTAL :		$7,563,910
		and	LE4,200,000

Bilateral Agreements with France

Institute and/or Project		Amount
1. Egypt Petroleum Research Institute:		
Phase I	- Construction	FF 5,000,000
Phase II	- Algal Protein	FF 1,500,000
	- Petroleum Additives	FF 2,500,000
	- Western Desert	FF 1,000,000
2. Solar Energy		
3. Electronics		FF12,000,000
	TOTAL :	FF

Bilateral Agreements with Federal Republic of Germany

1.	Theodore Bilharz Research Institute	DM19,000,000
2.	Trace Elements	DM 1,000,000
3.	Solar Energy	DM 1,000,000
4.	Central Laboratory	DM 2,000,000
5.	Electronics	
6.	Micro Waves	
7.	Desalination	
8.	DFVLR	
	TOTAL :	DM

Joint Research Projects between the Academy of Scientific Research and Technology and U.S.A.

Project	Parties	Principal Investigators	Duration Year	Budget
1. Marine Fouling & Corrosion, and anti-fouling and anti-corrosive coatings.	National Research Centre	Dr. Nadim Abdel Salam Ghanem (ARE)	3 years 1975-1978	LE 307,563 (PL-480)
	Naval Medical Unit No. 3 (NAMRY-3)	NONE (US)		
2. Utilization of Solar Energy	National Research Centre	Dr. Ibrahim A. Sakr (ARE)	2 years 1973-1975	$ 72,000 LE 81,000 (PL-480)
	University of New Mexico and University of Maryland	Dr. Philip Smith (USA)		
		Dr. M. Talat (USA)		
3. River Nile and Lake Nasser Project	National Research Centre	Dr. Fahmy Ramadan (ARE)	5 years 1975-1980	$1,075,000 (PL-480)
	Univ. of Michigan & the Environmental Protection Agency	Dr. Khalil Maney		
	(Equipment Ford Foundation).			

Project	Parties	Principal Investigators	Duration	Budget
4. Remote Sensing	Academy of Scientific Research & Technology	Dr. Mohamed Abdel Hady	3 Years 1972-1975	$150,000 LE120,000 (PL-480)
	University of Oklahoma	Dr. Hassan Moustafa	4 years 1975-1979	$150,000 LE135,000 (PL-480)
5. Geological & Geophysical Study of the Eastern Mediterranean	Academy of Scientific Research & Technology	Dr. El-Shazly M. El Shazly	3 years 1975-1978	$575,000 +Equipment
	Woods Hole Institute of Oceanography	Dr. David Ross	--	--
6. Metabolic Reactions in Fungi	National Research Centre	Dr. Abdel Aziz Allam	2 years	LE 22,900 (PL-480)
	University of Illinois (Dept. of Microbiology)	Dr. D. Wolf		
7. Distribution and Inactivation of Parasitic and Bacterial Pathogens in Edible Fish	National Research Center	Dr. Ibrahim El Desouki Refat	3 years	$ 30,000 (PL-480)
	FDA, USD Health, Education & Welfare	Dr. G. Jackson		
8. Biochemical and Physiological Studies of Certain Tick Vectors of Disease Agents	National Research Centre U.S. Government (N.I.H., BHS, BHEW, Bethesda, Maryland)	Dr. Mamdouh Y.H. Kamel	3 years	LE244,374 (PL-480)
		Dr. Garry Hoagstral		

Project	Parties	Principal Investigators	Duration	Budget
9. Corrosion & Corrosion Cracking of materials used in Petroleum & Chemical Industry	National Research Centre Univ. of Ohio (Metallurgical Eng. Dept)	Dr. Venice K. Goda (ARE) Dr. Rogers W. Staehle	3 years 1975-1978	LE 84,920 (PL-480)
10. The Anti-Shark Properties of the Secretions of the Red Sea Fish Pardachirus Marmoratus	Academy of Scientific Research & Technology (Institute of Oceanography & Fisheries) NAMRU-3	Dr. Aboul Foutouh Abdel-Latif	3 years 1976-1979	340,000
11. Effect of Hormones and Hormone-Like Substances on Animal Production	National Research Centre (Egypt) F.D.A. (USA)	Dr. Mohamed R. Shalash (Egypt)	3 years	$400,000
12. Aflatoxin Residues in Egyptian Food and Feed derived from plant & animal sources	National Research Centre (Egypt) F.D.A. (USA)	Dr. Kaiayria Naguib Dr. Albert Pohland	3 years	LE 90,420
13. Poisonous Plants contaminating edible ones and Toxic Substances in Plant Foods	NRC (Egypt)	Dr. Abdel Fattah Rizk	3 years	LE163,570
14. Immunological control of Parasitic diseases including Schistosomiasis	NRC (Egypt) ONR (USA)	Dr. Ibrahim Nabih Dr. G. Emery	3 years 1976-1979	LE340,000

A N N E X J

Working Conditions, Wages, Incentives and Career Prospects for Research Personnel

The Presidential Decree No. 69 of 1973 gives all regulations concerning the rules for the employment of the staff members of the universities and the research staff of centres and institutions affiliated to the Academy.

1. Research Staff

1.1 Research Professors

1.2 Assistant Research Professors

1.3 Researcher

2. Rules for Employment of Research Staff

2.1 Research Staff are appointed among Ph.D. (or equivalent) holders from one of the recognized universities and in the field of specialization of the posts.

2.2 Time before applying for a Post:

a) Researcher: at least 6 years after the B.Sc. (or equivalent).

b) Assistant Research Professors:

-- at least 5 years after holding the post of a researcher.

-- applicants from other institutes can apply for the post after 16 years from the date they receive their B.Sc. Degree.

c) Research Professors:

-- at least 5 years after holding the post of Assistant Research Professor.

-- applicants from other institutes should have spent at least 10 years after Ph.D. and 18 years after B.Sc. Degree.

2.3 Other requirements considered:

a) Assistant Research Professors

-- carrying and publishing outstanding research in the field of specialization and/or doing extraordinary accomplishments in the establishment of the laboratories to which they belong.

--- personal conduct, and ability of carrying research independantly.

b) Research Professors

-- carrying and publishing outstanding research in the field of specialization, which reveals originality and/or doing extraordinary accomplishments in the establishment of a research team in his field of specialization.

-- all scientific contribution after receiving the Ph.D. Degree is taken into consideration.

-- supervision of a number of M.Sc. Theses and Ph.D. Dissertations.

-- personal conduct has to reflect working harmoniously with others, and research ability has to reflect independence and capability to carry the crucial experiments that lead to the heart of the problem.

2.4 Procedures:

a) For holding a post of Research Professor or Assistant Research Professor

-- An advertisement for the post specifying the field of specialization and all qualifications needed for the job.

-- Applications are to be evaluated by a "Permanent Specialized Scientific Committee".

-- The members of the Committees are among the Professors of the Egyptian Universities, who have spent at least 5 years in the post, and are nominated by the Universities Councils and approved by the Minister of Education.

-- Committee members submit separate reports including a complete evaluation of the work submitted by applicants, and a clear statement to whether he is qualified for the post or deserves the title. The Committee members in a get-together meeting put the evaluated applicants in an order according to their scientific status.

-- The Committee has to submit its report within two months from the day they receive the applications.

-- If the Committee sess that one of the applicants is not up to the level to occupy the post, the applicant is not to reapply before one year, and it is a must that he has to s show further scientific accomplishments.

b) For holding a post of Researcher

The department to which the applicant belongs carry all the responsibilities of the Specialized Research Committee. The "Departmental Committee" includes three professors and might include assistant professors.

All Research Staff have to be in Egypt when holding the job they apply for.

3. Wages

The following table gives the wages of the staff members of the universities and the equivalent research staff of the centres and institutes affiliated to the Academy.

Post in University & equivalent in Research Institute	Annual Salary L.E.	Extra Payments & Salary			Annual Raise *
		University	Special	Job	
a) Staff Members					
President	2500	---	---	2000	None
Vice President	2000	---	---	1500	None
Dean of Faculty	1400-1800	420	300	---	
Deputy Dean		420	180	---	
Head of Department		420	120	---	
Professor		420	---	---	75
Assistant Professor (Assistant Research Professor)	1080-1440	324	---	---	72
Lecturer (Researcher)	720-1440	216	---	---	60
b) Other Personnel					
Assistant Lecturer (Assistant Researcher)	480-780	144	---	---	36
Demonstrator (Researcher Asst.)	300-780	90	---	---	60(for 1st Yr) 24 (for yearitant follow)

4. Incentives and Career Prospects

4.1 The Presidential Decree No. 69 of 1972 gives the university staff members and the research staff of the centres and institutes affiliated to the Academy the privilege of having the university [illegible] payment indicated in the previous Table.

*The Annual raise is due on the first day of January after holding the post.

4.2 Members of a research team working on one of the contracted research projects carried in a given research institute are entitled for 50 to 100% of their monthly salary as an incentive for contributing in the project.

4.3 National Prizes for Encouragement of Research

4.3.1 A total of 28 national prizes for encouragement of research are given annually for outstanding personnel that show outstanding contributions in the fields of:

-- Science	16 prizes
-- Social Sciences	3 "
-- Law and Economic Sciences	3 "
-- Literature	3 "
-- Art	3 "

4.3.2 The 16 Science prizes are divided between:

-- Chemistry	3 prizes
-- Agriculture	3 "
-- Engineering	3 "
-- Medicine	2 "
-- Geology and Mathematics	2 "
-- Physics	1 "
-- Biology	2 "

4.3.3 The value of the prize is LE 500.-

4.3.4 The Academy Council nominates the members of the Committee.

4.3.5 Rules for application include:

-- Outstanding research that reflects originality, sounding contribution to the field of the prize, and research findings that serve the nation in special and humanity in general.

-- Only published work or already applied research findings during the previous three years of application is considered.

-- Research work that is not included in a scientific degree or that has not been applied before for a prize, unless additional sounding contribution is included.

4.4 Medical Insurance

Starting July 1976, the NRC research staff are being covered by medical insurance. Plans are put forward to extend the insurance as to cover all research staff in other institutes affiliated to the Academy.