PD-AAA-511-A1

301.3207
W223

Proj. 9320924
[redacted]

EVALUATION REPORT

COMPUTER ASSISTED INSTRUCTION IN POPULATION DYNAMICS FOR NATIONAL PROGRAM DEVELOPMENT PLANNING AND EVALUATION

932-11-510-031
CSd-2937
Pha-C-73-16

A Report Prepared By:

B. THOMAS WALSH, PH.D.
GARY HILL, M.B.A.

During The Period:

JUNE 4 THROUGH AUGUST 29, 1975

Published By The:

AMERICAN PUBLIC HEALTH ASSOCIATION

In Agreement With The:

U.S. AGENCY FOR INTERNATIONAL DEVELOPMENT

AUTHORIZATION:
AID/pha/C-1100
Ltr POP/FPS: 6/4/75
APHA Assgn. No. 1100-004

TABLE OF CONTENTS

		Page
I.	INTRODUCTION	1
II.	SUMMARY AND CONCLUSIONS	4
III.	CRITIQUE OF THE POPULATION PROJECTION MODEL	6
IV.	ECONOMIC DEVELOPMENT CRITIQUE	20
V.	CRITIQUES ON SOME OF THE ADDITIONAL PLATO MODELS	31
VI.	USES AND LIMITATIONS OF THE PLATO PROGRAM	34
	APPENDIX	42

COMPUTER ASSISTED INSTRUCTION IN POPULATION DYNAMICS FOR NATIONAL PROGRAM DEVELOPMENT PLANNING AND EVALUATION

I. INTRODUCTION

A. BACKGROUND

The Agency for International Development (AID) has been supporting a project to provide computer assisted instruction in population dynamics since June 1971. Services are being provided through a contract with the University of Illinois by the Population Dynamics Group (PDG) under the direction of Dr. Paul Handler.

The computer assisted instruction in population dynamics is intended to provide training and analytical services to participants from less developed countries and to appropriate AID and other U.S. government personnel. This system, generally referred to as "PLATO" (Programmed Logic for Automated Teaching Operations), uses independent time-sharing consoles at various centers which are connected to a main frame computer, PLATO IV, located on the main campus of the University of Illinois at Urbana. Instruction to approximately 9,000 persons had been given from inception through June, 1975.

A further application of PLATO has been envisioned through development of a free-standing Mini-Computer which can be placed directly in less developed countries. Such a Mini-Computer has already been built by General Dynamics for the Population Dynamics Group and, pending feasibility review, such Mini-Computers are proposed for installation at overseas locations.

The project began in June, 1971 with the stated purpose of enabling the University of Illinois, over a two year period, to develop and present a computerized course in Population Dynamics and Economic Development to approximately 300 participants annually. In the Fall of 1972, the purchase and installation of a PLATO IV terminal in Washington, D.C. was authorized. In May 1973, a new contract extended the project for an additional two years through June, 1975. The scope of services were expanded to provide Population Dynamics Seminars in other training centers in the United States, including Washington, D.C., the Airlie Interamerican Dialogue Center, and several universities. At a later date, funding was provided to cover the period through March, 1976 with expansion

TABLE 1

PLATO DOCUMENTATION

Project Title: Computer Assisted Instruction in Population Dynamics and Economic Development (June 1971 - May 1973)

Computer Assisted Instruction in Population Dynamics for National Program Development Planning and Evaluation (May 1973 onwards)

Project Number: 931-11-570-924

Contract Number	Date	Duration	Completion Date	Amount Obligated	Cumulative Funding
csd-2937	6-30-71	24 months	June 1973	281,000	281,000
csd-2937		6 months	June 1973	9,000	290,000
PHA-C-73-16	5-29-73	24 months	June 1975	719,000	1,008,000
PHA-C-73-16		9 months	March 1976	419,000	1,427,000

in the scope of services to cover additional computer models and to install one free-standing PLATO Mini-Computer at an overseas location. As of June 30, 1975, $1,009,000. had been expended of a total of $1,427,000 obligated. (See Table 1.)

B. PURPOSE OF THE EVALUATION

This report represents the first overall comprehensive evaluation of the Computer Assisted Instruction in Population Dynamics project. Throughout the report the models and computer system utilized are referred to as "PLATO", and the persons involved in developing the models and the population materials at the University of Illinois are designated as "PDG" - Population Dynamics Group.

As of June 30, 1975, the Population Dynamics Group had developed a series of models or submodels covering factors in development affected by changes in population structure, size and growth. The demographic model is for population projections and the results of this basic model are utilized by all other related projection models, i.e. Economic Development; Labor Force; Migration; Energy Demand; Food: Supply, Demand and Trade; Educational Costs and Enrollment; and Contraceptive Coverage. Construction of a health model is planned, but has not yet been developed. In addition, there is a program available for obtaining regional data derived by grouping appropriate countries together. Another program provides historical population data for selected countries. Instruction on the construction of life tables is also separately provided. A listing of the models and programs available and the persons having primary responsibility for their development is given in Table 2.

Descriptions of the construction and applications of the various models are provided in a series of Commentaries prepared by the PDG. User's Manuals are also available on how to operate the various programs, and how to edit the population data base. A description of the data structure employed is also provided.

Production of PDG Commentaries has lagged somewhat during the duration of the project, although greater effort has been put forth in the past year to complete, update and revise the contents. The most important commentary, that on population projections, was completed in June, 1975, and contains over 120 pages. PDG Commentaries on the other models are still in rough draft form and in varying degrees of completeness.

TABLE 2

AVAILABLE FROM PLATO MODELS POPULATION DYNAMICS GROUP
(as of June 1975)

Name of Model	PDG Commentary Available	Prepared By	For Use By Mini-Computer	Critiqued In This Report
Population Projection				
One Sex (Combined)	Yes	Klaff	Yes	Yes
Two Sex	No		No	Yes
Regional	No		No	No
Economic Development	Yes*	Roh, Handler	No	Yes
Labor Force	Yes*	Roh	No	Partial
Educational Costs and Enrollments	Yes*	Fulponi, Birnbaum	No	Yes
Energy Demand	Yes*	Milstein, Radell		
World Energy Trade Model (?)	No		Yes	Yes
U.S. Energy Supply Demand Model	No		Yes	No
U.S. Energy Demand Model	No		Yes	No
			Yes	No
Food Supply Demand (Trade?)	No	Klaff, Fulponi	Yes	No
Migration	No	Klaff	No	No
Population History	Yes*		No	No
Contraceptive Coverage	No	Handler	No	Yes
Life Tables	No	Klaff	No	Partial
Health (Proposed)	No		No	No
Income Distribution (?) (Proposed)	No		No	No

*Preliminary.

A critique of five of the key models comprising the PLATO program follows. The comments, while detailed, are not intended to be totally exhaustive. Lack of documentation makes assessment of some of the less important models impossible.

II. SUMMARY AND CONCLUSIONS

The PLATO system in population dynamics has many good features to recommend it. The computer technology is sophisticated and provides a rapid feedback of information coupled with an excellent visual display. The mode of presentation attracts considerable interest, and the ability to focus on the consequences of population growth for an individual country adds greatly to presentations of population dynamics. The user can interact with PLATO and, if teaching materials are well prepared, PLATO can be an excellent teaching device.

At present, the primary use of PLATO has been for demonstrations of population awareness. The presentations about the implications of population growth and future development needs lasts approximately one hour. The response of most viewers has been favorable, but it is difficult to assess just how much, or how well, basic relationships and concepts have been understood.

The size of the PLATO display screen effectively limits comfortable viewing to not more than six people at a time. Time limitations preclude participants receiving more than a limited awareness of population implications, but PLATO does well for the time allowed. The presentation tends to be confined to projections and their impact; historical background or concepts are covered only slightly. There is a tendency, especially marked since the advent of a hard copy printer, to interpret the data being generated as predictions of future events. Such an interpretation is not justified because of the limitations of data and methodologies applied.

The full capabilities of PLATO are not being realized largely due to the construction of overly simplistic models. There have been several instances of attempting to use PLATO for purposes beyond its capabilities and such efforts should be discouraged both by AID and the Population Dynamics Group.

In the teaching of population dynamics or planning and policy analysis other AID-funded learning systems and models, specifically GE-TEMPO and the LRPM (Long Range Planning Model) of the Bureau of Census, are more technically advanced. These systems incorporate more sophistication in the construction of their models and generate more precise results. The unique features of PLATO, such as the plasma display screen and rapid user interaction, are of less importance for planning or policy purposes.

PLATO can be used for population awareness demonstrations, but not without substantial technical improvement in the construction of the models, the nature of the assumptions

made, and the methodologies employed. The population projections model, which provides the inputs for all other models, is of paramount importance and usage of many of the present short-cut methods and simplifying assumptions result in less than adequate results. A detailed listing of suggested changes is provided at the end of the section dealing with the demographic and economic development models. Other models, particularly energy, food, and contraceptive coverage, are based on such incomplete relationships and inadequately estimated parameters that no confidence can be placed on the results. These three models need to be totally reconstructed or else abandoned.

The argument that substantially the same results are generated by PLATO as by other approaches or models is specious and should be rejected. There are elements in population besides total size, such as composition by sex and age, which should be properly represented. There is also no point in using makeshift methodology when standard widely accepted procedures are readily available.

The models are inadequately linked together and do not sufficiently reflect the impact of population size, growth, and composition on economic and social factors. The alternative of bringing within the PLATO system other more adequately constructed models, such as GE-TEMPO or LRPM, is not justified on the basis of expense, lack of adequate technical assistance, and the limited level of purpose to be served. Improvements can and should be made in the population projection, economic development, and education models. Until this is accomplished, no further development of models for AID use should be undertaken.

The providing of Mini-Computers at overseas locations is not justified. The number of people who could be benefit from a population awareness demonstration is not known, but it is hard to conceive of more than relatively limited groups at any given location to whom such a demonstration is pertinent. The stage of development of the various PLATO models is such that serious consideration cannot be given to using the Mini-Computer for planning or analysis purposes. The problems in flexibility of operation and support assistance, as detailed in the Appendix, mitigate against the use of the Mini-Computer.

The overall recommendations concerning PLATO are:

1. Limit the use of PLATO to population awareness.

2. Reconstruct models for population projections, economic development, and education.

3. Do not develop or use other models at this time.

4. Do not initiate installation of the Mini-Computer.

III. CRITIQUE OF THE POPULATION PROJECTION MODEL

A. OVERALL PURPOSE

The PDG Commentary describes the demographic model of PLATO in terms of making population projections. (A summary of recommendations concerining this model is given at the end of this chapter.) This is an eminently correct use of the word projection, which means simply to extend population trends for the future, based on some plausible pattern of growth from the past. Particular emphasis is placed on the definition of projection because there is a common misunderstanding about the nature of the results generated by PLATO. Many users believe the estimates to be of high precision and suitable for use in planning, when actually the data is illustrative of probable trends and directions only. The assumptions and their hypothetical nature are frequently overlooked when the results of population projections are incorporated in other models dealing with economic growth, food, education, energy demand, or contraceptive coverage.

There are two principal ways of making population projections. The first type is crude and consists of projecting an observed rate of growth. The PLATO model is more refined, in that population projections are based on separate assumptions about the course of mortality and fertility which in turn determine the rate of growth. The model produces projected demographic data for five-year age groups at five-year intervals based on either constant or changing parameter assumptions. Each age group is projected separately based on assumptions concerning age-specific mortality and fertility rates.

The basic PLATO model does not, however, make separate projections by age and sex. (The "two-sex" model developed for PLATO is seldom, if ever, used for population awareness demonstrations, and the one sex, or combined model, clearly remains the mainstay of the PLATO system.) In this respect the basic PLATO model is unique. There are a considerable number of computer-simulated projection models that have been developed based on the component method of projection, but in every case births and deaths are calculated in relation to each age and sex group of the population.

The failure to use age-sex specific rates in making projections is questionable. Granting the contention of the PDG that at the time of original development there was a lack of core capacity in the computer to accommodate the necessary calculators, the continued use of the (combined) sex approach, now that capacity is no longer a problem, should be examined.

In other models, total population is determined by adding together the separately projected populations of males and females. This is not done in PLATO where projections are based on total population. The defense of this approach is expressed on page 20 of the PDG Commentary as follows:

> "This simplifies the program algorithms and considerably increases the response time. (Note: probably an inadvertant misstatement -- simplifying the algorithms should decrease response time.) In the short run, up to 50 years, the projected population totals using the combined sex model differ only very slightly from the two-sex model. Over a longer period differences increase, but considering the flexibility of population growth to changes in the demographic parameters and unknowns such as the marriage function, these differences are considered to be within reasonable bounds."

The decision to base projections only on age components, and not by both age and sex, has important consequences. The importance is not so much in whether the same estimates of total population are produced, but in the ability of the model to stimulate the effects of births and deaths in the population by sex and age.

The distortion produced by the combined sex model is significant when age and sex distribution must be analysed. Using a combined mortality rate is misleading since the mortality experience of females is more favorable than that of males in every country of the world. The use of a combined mortality schedule implies that the number of males and females are equal for each age interval. Since no sex ratio at birth is employed, the number of male and female births are considered equal. Both of these outcomes are contrary to reality. More boys are born than girls, and males outnumber females until age 30 in most countries. After age 30 more females than males are present at each age interval because of their greater expectancy of life and more favorable mortality experience.

In sum, three major sources of distortion are introduced when projections are made on a combined sex basis. They arise because of the failure to take into account: 1) the difference in the number of male and female births; and 2) the difference in the number of male and female survivors at each interval. The result is an incorrect assumption of equal numbers of male and female births being inputted; that an equal number of males and females survive at each age

interval; and that the total population is comprised equally of males and females. The population projection model thus fails to stimulate the actual effects of mortality and fertility as well as it should because it does not properly reflect the age-sex composition of the population.

B. MORTALITY ASSUMPTIONS

Important distortions are introduced because of the way in which mortality schedules have been employed. On page 64 of the PDG Commentaries it is stated:

> "In the computer are stored cohort specific survival probability schedules for selected Life Expectancy at Birth values, based on Regional Model Life Tables for each of four regions. (North, East, West, South.) For each region 12 schedules are stored, increasing in five year steps from an LE of 25 ($e_0^0 = 25$) to an LE of 80 ($e_0^0 = 80$). The Coale-Demeny Regional Model Life Tables (Coale and Demeny, 1966) are used. Although a difference exists between the average survival rates of men and women, a consistent set of schedules, based on the female tables, has been used in all the models. It was found that this does not significantly affect the projected results. The $e_0^0 = 80$ schedules were constructed by extrapolation techniques." (Emphasis added.)

First, calling these schedules "cohort specific survival probability schedules" is confusing. What life tables give is a value of P(X) -- generally expressed as the probability of surviving between age x and age xtn. In constructing any life table, the assumption is made that mortality rates at each age may be applied successively to form a hypothetical cohort, even if they pertain to the same year. This method is a way of representing the history of a complete lifetime when the available data pertains to only short periods. (In those rate instances where data is based on the experience of an actual cohort, it is generally called a "generation life table." The term "synthetic cohort life table" is redundant; the term "life table" implies use of a synthetic cohort.) The result if a summary of a year's death rates, rather than an actual life history. Estimates based on such rates reflect what would be the implications if the synthetic schedule of mortality did apply to an actual cohort. But labeling it "cohort specific survival probabilities" makes it appear that we are talking about real cohorts, or that the schedule of mortality rates provided are something other than the regular survival probabilities incorporated in all life tables.

Second, no explanation is given as to how the appropriate regional life table is selected. Coale and Demeny have suggested utilizing the "West" family of life tables in the usual circumstances of underdeveloped countries where there is no reliable guide to the age pattern of mortality that prevails. Other developed countries may be better fit with other regional families of life tables. This procedure has probably been followed by PLATO, but the PDG Commentary does not indicate which family of regional life tables have been employed for specific countries. There is a great deal of informed judgment needed in selecting which life table to use and, on this point, the PDG Commentaries explains very little.

Third, only 12 schedules for each of the four regional families of life tables are stored. This is exactly one-fourth the number, 48, provided by the Coale-Demeny tables. (Twenty-four levels of mortality given separately for males and females.) Interpolations take place over twice as large a range as otherwise would occur. This leads to some distortions because changes in mortality experience are not proportionate at all ages, particularly with regards to infants, children under age 10, and to persons over age 70.

Fourth, the assumption is made in the PLATO system that female life tables can be used to represent the combined mortality experience of males and females. For most countries, females have a more favorable mortality experience at older ages than males even if the life expectancy at birth for each is assumed equal. Further, to make an assumption in any given country that the life expectancy at birth for males and females is equal is contrary to reality. For any given mortality level, the corresponding expectancy of life at birth for males is less than for females. To simply average the expectancies of life for males and females at a given time does not properly represent the mortality experience of either the males or females. Using the tables for females (and therefore the female pattern of mortality) further reduces the adequacy of the results.

A further note of confusion is provided in the section of the PDG Commentaries dealing with data and data sources (p. 110).

> "The IDSC data give population distribution and life tables for males and females separately. From these we derive the distribution of the population as a whole. Mortality ($1-P_x$) for the entire population is derived from the male and female life tables on the assumption of a sex ratio of 1.02 for African countries and 1.05 for others, unless mentioned otherwise."

Aside from the basic question of why one should construct a combined sex model when data can be used directly without transformation on a two-sex model, the reference to sex ratios is totally confusing. Sex ratios have no bearing on mortality experience; they are used in determining the proportion of births that are male and female. On page 21 it is stated, "Population is divided into 18 five-year cohorts, with the assumption that there are an equal number of males and females in each five-year cohort." Obviously, the sex ratio does not enter into the PDG calculation of births or survivors. How, or in what way, does it enter into deriving mortality?

The transformation of separate male and female life tables into something that can be used for a combined sex model is itself confusing. On page 44 it is stated, "The mortality schedule used in the PDG projection model is a weighted average of the male and female schedules and is stored as a probability function." (Underlining added.) How is this weighted? Is the expectancy of life at any age proportional to the number of males relative to females? If all cohort age intervals have equal numbers of males and females, how is this possible? Is the weighting not in the schedules, but in the expectancy of life at birth between males and females? Elsewhere it is stated that only female life tables are used. Does this represent a proper weighting between male and female mortality experiences?

The rationale of the one-sex (combined) model is based on presumed advantages in shortcutting the estimating of survivors process by using a combined e_0^0 and not employing separate life tables for males and females. This really makes no sense because the strength of a computer lies in its ability to do involved calculations quickly. Proper estimation techniques are to use separate life tables for survival.

Exception must be made to the original statement in the PDG Commentaries that "in the short run, up to 50 years, the projected population totals using the combined sex model differ only very slightly from the two-sex model." First of all, this statement misses the point that total population is not the only, nor necessarily the most important, criteria of producing adequate population projections. Distortions in reflecting age-sex composition may have more effect on such things as education demands, labor force, and unemployment. The statement and the rationale also ignore the point that if PLATO is to be used for instructional purposes on how to do population projections, it does not employ the correct and almost universally applied methodologies. The approach may suffice to bring about an awareness of the serious implications of population growth to those who have had

little previous exposure. However, the approach falls far short if intended to be used for computer assisted instruction or for planning and policy purposes.

It is also unusual to define the short run as "up to 50 years." Short run in most developing countries seldom encompasses a period of more than 10 years or 15 years at most. But the argument that the results of total population do not differ substantially between the one and two sex models is somewhat tautological. Why this is so can be understood if we analyse what causes population growth.

Most projections for PLATO are based on 1970 data. The survivors for that year are determined by the level of mortality and the number of people already present; fertility affects only the numbers born afterwards. For a few years after this date, the major elements of projection are the base population by age and the proportions at each age that survive. The population by age is fixed at the time of the base year, and the rates of survival are subject to relatively little change at most ages. For this reason, the estimates may be quite close to reality until the effect of fertility begins to occupy a large place in the projected population, which happens as the projection moves further away from the base population. In the short run, differences in population totals are affected more by mortality and the present age and sex structure; as the projection time span increases, the effects of fertility play a larger role.

The reason for making projections separately by sex goes beyond this consideration. The effect of births and deaths in a population is distributed according to the actual age and sex structure. A two-sex model not only shows the effects of the assumed vital rates on age and sex structure, but includes these structural changes in the future estimates of births and deaths. Compared with other types of projection, this approach relies less on the nature of its assumptions and more on the actual composition of the population.

C. FERTILITY ASSUMPTIONS

Most of the discussion thus far has centered on mortality -- on the effects of using a combined life expectancy, and using a single probability table for survival. Projections are also affected by fertility, and changes in fertility will have a far larger impact on age-sex composition than changes in mortality.

A key feature of the PLATO model is the use of cohort measures of fertility. Approximately a dozen pages in the PDG Commentary (pages 22-33) are devoted to the subject with illustrative calculations and Lexis diagrams. The measurement of fertility

in cohort terms is in accord with viewing fertility as the number of births per woman during the childbearing period of life (completed family size). On the other hand, fertility is also measured by a vital rate based on the births and population data of some clendar year. The difference is explained by Barclay as follows:

> "The distinction between these two approaches must be clearly maintained, for they do not yield the same sort of conclusions. The first represents the complete reproductive performance of one group of women, which may last about 35 years. The second includes part of the performance of many different age groups of women, lasting for just one year. This will be recognized as the distinction between synthetic and actual cohorts." (Barclay, George W., Techniques of Population Analysis, (Wiley, New York) 1966, p. 168.)

PDG, however, uses cohort fertility rates for the somewhat different purpose of making population projections rather than analyzing actual reproductive histories. Cohort measures when used for such purposes lack complete reproductive histories and thus remove the distinction between synthetic and actual cohorts. The PLATO model itself acknowledges that cohort age-specific fertility rates (a highly confusing terminology) are based on synthetic cohorts.

Using cohort rates, the number of women do not essentially change -- it follows the same cohort through time and the only changes are caused by deaths within the cohort. But the age-interval limits do change during each projection period, thus the cohort that was 20-24 at the beginning of the projection period will be between 25-29 at the end of the period. It is, in effect, the average of the ASFR for the 20-24 interval at the beginning of the period and the ASFR for 25-29 at the end of the period. Shifting the age limits during the projection period considerably complicates the interpretation of "cohort" age specific fertility rates.

The age limits specified for the cohort rate really refer only to the initial year. The cohorts get a year older for each elapsed year, so over a five-year period the cohort value represents an age about two and one-half years older than the period rates. A comparison between cohort and period age-specific fertility rates will show that cohort rates are higher than period rates in the younger years and lower in the other years. Since both rates represent synthetic cohorts, and since calculation of cohort rates is derived

from period age-specific fertility rates, the sum of both period and cohort ASFR's are the same. This also means that the total fertility rate (a period measure) is the same as the average number of children ever born (a cohort measure).

The PLATO model presently makes changes in fertility assumptions by changing the total fertility rate (TFR). Since the TFR is considered to be the surrogate for completed family size (and in the PLATO model is identical), the use of cohort fertility rates accomplishes nothing that is not done by using period age-specific fertility rates. The question then is, why get into a complicated discussion of cohort and period rates when nothing is added to the results?

PDG should refrain from getting itself involved in attempts to measure the frequency of fertility by cohort rates. This is based on the belief that while a statistical view of childbearing patterns seems increasingly to refer to a cohort's experience, the actual measurement must be carried out in terms of calendar year performance. This much is admitted in the PDG Commentaries on page 30:

> "However, unless the data for births and the census are both tabulated in terms of cohort identification (year of birth), it is impossible to tabulate any of the real cohorts directly. Instead, it is necessary to estimate them from conventional vital statistics tabulations of births and population data."

There are other reasons for dropping the use of cohort rates for projection purposes. Period birth rates can be computed from material that is widely available, permitting some measurement of fertility on the basis of more limited records. Vital statistics are maintained on a period basis as are most data published or available in developing countries. Period rates can be tied directly with changes in crude birth and death rates of population growth -- themselves, all period rates. Fertility patterns showing changes in countries over time are based on period rates. Nearly all data in the Demographic Year Book and other sources reflecting population measurement and changes is on a period basis. In sum, use of cohort fertility rates does not fit the projection methodologies employed by the United Nations or individual countries; the kind of information about changes in cohort fertility behavior is lacking in nearly all countries; the conceptual explanation is complicated and requires transformation of data; and the possible refinements in fertility measurement by use of the cohort approach are not reached in terms of the data available.

One final methodological note about projective techniques. The fertile age period for the PLATO model is placed at 15-44. The data on age-specific fertility rates (which in turn are averaged to derive cohort age-specific fertility rates) are largely derived from data supplied by the International Demographic Statistics Center (IDSC). ASFR's are given for women 15-49 in five-year intervals. To suit the PLATO model, the ASFR for the age group 45-49 is added to the ASFR for the age group 40-44. (PDG Commentary, p. 110)

Fertility rates for these ages are relatively low and the methodology described will generally give a reasonable approximation. Some distortion is introduced because in the structure of the age pyramid there will be fewer women 45-49 than 40-44. The difference depends largely on past fertility rates (high growth produces a wider based pyramid) and on levels of mortality for these ages. Adding the ASFR for the ages 45-49 which is based on smaller group of women to the ASFR for age 40-44 which is based on a larger group, results in overstating the ASFR for 40-44.

If the upper limit of the fertile period is set at 44, proper procedure is to ascribe the births occurring to women 45-49 to the 40-44 age group and then divide through by the number of women 40-44 to obtain the ASFR for 40-44. Another alternative frequently used for developing countries, where substantial numbers of women continue into a period of late childbearing, is to extend the fertile age range from 45-49. One additional ASFR needs to be inputted for each country, but this is certainly not an insurmountable task.

D. CHANGING DEMOGRAPHIC PARAMETERS

There are eight demographic variables which can be changed at various stages in the population procedure. These are:

1. Total Fertility Rate (immediate or gradual)
2. Infant and Child Mortality (immediate or gradual)
3. Life Expectancy at Birth (immediate or gradual)
4. Age-Specific Fertility Rates (immediate)
5. Percent of Population in Each Age Group (immediate)
6. Cohort Five Year Mortalities Per 1,000 (immediate)
7. Total Population (immediate)
8. Crude Birth Rate (immediate and gradual)

Before commenting on the procedures used in changing any of the eight variables, it is obvious that the range of options are far wider than can be used for demonstration purposes. To get full utilization of the capacity to make varying assumptions about future population growth would require that much more time be allotted to the study of population dynamics than is the case for nearly all presentations. The flexibility to alter several variables is a desirable feature and makes for a much better model for population projections. It should be recognized, however, that except for occasional individuals who request additional time with PLATO, or where PLATO can be incorporated as an intrinsic teaching aide to a regular course of instruction, little use is currently being made of this significant feature of the PLATO model.

To provide a fairly sophisticated means of reflecting changes in fertility when the basic model does not make separate projections by sex seems unfortunate. Why bother changing the total fertility rate or age-specific fertility rates, when at the same time simplistic assumptions are made that male and female births are equal, that males and females are equal at each age interval, and that both males and females are subject to the same mortality schedules? The number of births occurring in a country is determined by the fertility rates prevailing and the number of women at risk. To reflect accurately the changes in fertility rates while making much cruder estimates of the number of women at risk, impairs the accuracy of estimates of births. PLATO must strive for a sufficiently sophisticated construct in its methodologies if the results generated are ever to be taken seriously for planning purposes.

Since children ever born is represented by the total fertility rate (TFR) in the PLATO model, its meaning can probably be grasped readily by most users. Because TFR refers to completion of childbearing; however, changes in the TFR are seldom, if ever, specified in national goals relating to reducing fertility. National population goals are almost always expressed in terms of reducing the crude birth or the annual rate of population growth (assuming no migration, the difference between crude birth and death rates). The option of changing the TFR is of limited value for planning applications. On the section dealing with the crude birth rate, it is stated:

> "A change in CBR is quite complex to implement, and this option is allowed only during a sequential plot. Changes in CBR are implemented by calculating, using an iterative process, the TFR that would produce the desired CBR at the given time in the given country."

A detailed explanation of the iterative process is given, the gist of which is that the CBR used for each calendar period in the projection must be translated into an equivalent TFR for the beginning and end of each five-year period.

The questionable thing about this approach is that policy determinations are made in exactly the opposite manner. Program goals are overwhelmingly expressed in terms of changes in the CBR, either directly or indirectly. Goal setting in terms of changes in the TFR is inappropriate because such a measure is derived from past fertility. Most cohorts of women have already entered into the childbearing period and changes in fertility after a certain calendar date can affect only the remaining portion of her fertile period. This is why changes in TFR are a slow, gradual process and why the TFR is not used to measure change except over an extended period.

The PLATO model provides that changes in the ASFR can only be made immediately (to take effect in the first period). Why changes cannot be made gradually, which is the case for all other measures of fertility, is not explained. One assumes it is related to the procedure for altering the TFR gradually, which is to change each ASFR in proportion to the change in the TFR. Again this is conceptually backward. Cohorts are subject to ASFR's as they pass through their fertile period; by the time the ASFR's have been experienced, the TFR is already determined. In terms of calculations, it makes no difference if a postulated change in fertility is expressed in terms of a decline in the ASFR's or in the TFR. For example, a two percent decline a year in ASFR's will result in cutting the TFR by two percent a year, or vice-versa. Specifying changes in the TFR, however, locks in the ASFR's to the same proportionate change. It may be more realistic, however, in a country embarking on a larger-scale public program in family planning to postulate that declines in age-specific rates will first take place with older women and later, as the program matures, with younger women. In such a situation, declines in fertility for certain age groups will be greater or lesser than for certain other age groups. What these changes could be might be based on information produced by on-going country population programs or on information from other countries having already embarked on similar programs. The point is, much greater flexibility and closer simulation to reality is built into a projection model if ASFR's can be altered gradually and in varying amounts. Limiting changes in ASFR's to proportionate changes in the TFR locks in the present pattern of childbearing. Levels of fertility for a given country may be lowered over time; using the PLATO model the shape of the pattern of fertility remains unchanged. This is unrealistic and impairs

the ability of the model to simulate probable changes in fertility. It is recommended therefore that the TFR option not be used as the primary variable for postulating change in fertility. Age-Specific Fertility Rates should be allowed to be changed on a gradual basis and in varying proportions. Along with postulated changes in crude Birth Rates, a much more realistic simulation of the effects of changes in the levels and patterns of fertility can be obtained.

E. CHANGING MORTALITY CONDITIONS

Changes in mortality can be reflected in three ways: infant and child mortality; life expectancy at birth; and cohort five year mortalities per 1,000. All are in varying degrees interrelated. Increased life expectancy at birth is reflected by improved infant and child mortality and probable mortality improvement in other five-year age groupings. This interdependence is why, under normal projection procedures, only one fertility and one mortality variable should be changed.

In most projection models, changes in mortality are postulated in terms of increased life expectancy at birth (e_0^0). This is the primary measure that is employed in PLATO. Unfortunately the basic model of PLATO uses a combined life expectancy and does not separately survive males and females. Additional distortion is also introduced by use of only female life tables as a surrogate for combined mortality experience.

If, for the moment, it can be assumed that PLATO will use separate male and female life tables in the future, there are still some additional comments about the methodology employed. First, the option of making an immediate change in life expectancy has no relevance to population projections. Improvements in mortality experience are relatively slow and gradual; the examples in the PDG Commentary of immediate changes in life expectancy at birth from 45 to 65 and from 45 to 68 are totally unrealistic. No change in mortality is immediate; all changes occur over time.

The option of making a gradual change is given and this is the option that would be used in any demonstration. What is not provided as a guideline is what the probable limits of improvement in mortality experience is likely to be. The United Nations has suggested for developing countries an improvement of two and one half years in life expectancy for every five years of elapsed time up to age 65. Several countries have exceeded this rate of increase. What is most appropriate for a given country is influenced by the recent experiences of other countries undergoing similar stages of socio-economic development, and by recent mortality experience in the country itself. In any event, improvement in life expectancy is likely to be linear up to about age 65 with a tapering off past this point leading to a maximum life expectancy of approximately 72 years (somewhat higher using the Coale-Demeny tables).

Two points should be noted. The increase in life expectancy from one five-year projection period to another is frequently not linear. The amount of increase becomes smaller at each successive period after age 65. For example, on the average an increase in life expectancy from 60 to 65 years can be expected to occur in about ten years elapsed time; an increase from 65 to 70 may likely take more than double the amount of elapsed time. A second point is that the improvement in life expectancy is generally unequal between males and females. At lower life expectancies, females may increase expectancy faster than males; at higher life expectancy levels, male expectancy may increase proportionately faster. Differences in life expectancies between males and females as great as 10 years have been observed in some countries. As mortality conditions improve, life expectancies for males and females tend to move closer together.

The procedure used by PLATO fails to take these two points into account. The difference between male and female survival rates in any country can, over time, only be accommodated by using separate life tables. How much distortion is introduced by using only female life tables depends on how great the differences are between male and female life expectancies, and on whether either or both sexes have reached a life expectancy of age 65 and over, and thus future improvements in life expectancy are smaller and non-linear.

PLATO takes the survival rates corresponding to expectancy of life at the beginning and end of the projection period and divides the difference by the number of projection periods. This makes the improvement in life expectancy and change in survival probabilities linear, which is seldom the case. This can be totally avoided by first correctly postulating what the pattern of increase in life expectancy is likely to be, and then interpolating values from life tables most closely corresponding to these values.

The PLATO procedures are also cumbersome in estimating beginning of period and end of period survival values in order to arrive at a survival value during each five-year projection period. It is simpler to make assumptions of life expectancy in terms of an estimated value representing the mid-point of each five-year projection period. Once the initial mid-values are established, successive mid-period values representing five years elapsed time can be calculated.

F. AGE COMPOSITION

The procedure for iteratively deriving the percent of population falling into each of the 18 age cohorts is simple and straightforward. Comparisons based on total population by age group is of limited interest but is a consequence of using the one-sex

(combined) model. Distribution by sex and age is much more useful in analyzing employment rates, marriage rates, and the like. Phenomenon such as a "marriage squeeze", caused by imbalance between males and females, cannot be analyzed on an age aggregate only. Every phase of analysis presented in the PDG Commentaries is hobbled in varying degrees by the unwillingness of the PDG group to allow total population data to be derived from combining separate male and female estimates.

G. SUMMARY OF RECOMMENDATIONS CONCERNING THE POPULATION PROJECTION MODEL

1. Use a two-sex projection model exclusively. (Such a model requires: a full range of life tables [24 levels rather than 12]); separate male and female life tables; separate expectancies of life at birth; base-year population data by age and sex; and sex ratio at birth by country.)

   a. Make projection estimates of males and females separately.

   b. Derive total population by adding male and female projections.

   c. Eliminate the one sex (combined) model.

2. Drop the cohort concept for population projections. (Reproductive histories are not available; cohort rates are based on and require transformation of period data.)

   a. Estimate births using the conventional projection methodology of multiplying the average number of women in each fertile age interval by the age-specific fertility rate for that interval.

   b. Estimate births separately for the 45 to 49 female group.

3. Eliminate the total fertility rate as the primary change variable.

   a. Make postulated fertility changes in terms of crude birth rates or age-specific fertility rates.

   b. Permit changes in age-specific fertility rates to be gradual as well as immediate.

IV. ECONOMIC DEVELOPMENT CRITIQUE

A. GENERAL CONSIDERATIONS

The PDG draft Commentary on the PLATO Economic Development Model is considerably shorter than the PDG Commentary on the Population Project Model. (Recommendations about this model are given at the end of this chapter.) The difference in length belies the importance of the Economic Development Model. Much of development planning is based on such models and the rates and levels of economic devleopment are very much influenced by changes in population size, composition, and growth.

The Economic Model is influenced by a wider variety of variables and produces a greater number of outputs than any other model. The Economic Model is also the most difficult to construct. Difficulties arise in striking a balance between achieving better simulation through consideration of a greater range of variables, and the attendant difficulty of not obtaining adequate data for these additional variables or relationships.

Presently there are a number of economic development models which in varying degrees give specific recognition to the impact of population. Two of the most widely known models were developed through AID-funded contracts. They are the GE-TEMPO model and the LRPM (Long Range Planning Model) developed by the United States Bureau of Census. These are considerably most sophisticated models than the PLATO Economic Model and it would be highly desirable if they could be made available to PLATO users. There are a number of limiting features of the PLATO model which either should be overcome or else be supplanted by models such as those cited.

The intention here is not to attempt to describe all the features that could comprise to a good demographic-economic model. Much depends on the use to which it will be applied. Lack of reliable data restricts the degree of sophistication which can be entertained. There are, however, certain key relationships between demographic and economic factors that should be included in a demographic-economic model if at all possible.

The main thrust of PLATO is to bring attention to the consequences of population growth. Unlike many of the earlier economic-development models which paid little or no attention to demographic factors, the economic model used by PLATO should adequately reflect the impact of population growth. The unique focus of all the PLATO models is, and should be, on population.

The basic criticism of the PLATO Economic Development Model is that very little of its construction is related to the consequences of population growth. A neo-classical production function of the Cobb-Douglas type is used in which the contribution of labor is taken into account. This is virtually the only part of the economic model in which the data generated by the population projection model is utilized. Great stress has been laid on the consequences of population growth on economic development, but the economic model fails to incorporate most of these relationships in its contruction.

B. SAVINGS

A basic issue is the impact of population growth on savings. The Economic Development Commentary (p. 1-2) recognizes this in stating:

> "One of the most significant of social decisions is the choice between consumption and saving. If a larger portion of society's output is consumed in the current year, then fewer resources will be available for investment, which will mean less potential output in the future and thus will mean less consumption will be possible. In other words, a decision to save less and consume more will mean that the capital stock will become smaller in the future, which will tend to cause less potential output...
>
> In a developing country, an increasing population base will cause an increase in gross national product (total output), but will not necessarily cause an increase in per capita income as a result of diminishing marginal productivity of labor. Many developing countries with a rapidly growing population base have a chronic capital shortage, which means the economy is operating with a less than optimum capital stock. A rapidly growing population will be a significant deterrent to the propensity to save (emphasis added) and retard the increase in the capital/labor ratio as a result of slower accumulation and the large number of workers competing for the available capital stock."

Why then is this relationship not recognized in the economic model? The effect of population growth on savings (and thus investment) is ignored. The reason given on page 9 is that:

> "Although it is widely recognized that saving increases as income rises or fertility declines, there is little hard evidence to quantitatively characterize the savings function... As to effect of fertility on savings, many recent studies show that the conventional belief of the inverse relationships between fertility and savings may not hold true in a variety of situations. Even though the authors of these studies believe, that, under reasonable conditions a decline in fertility, thus a reduced dependency burden, would induce additional savings, the subject remains inconclusive and may need more empirical investigation. Even though domestic savings represent most of gross investment, long term capital inflows from developed countries are an important supplement to domestic investment in most developing countries."

The second statement quoted also appears in a paper by Paul Handler and Chagseng Roh, "The Population Dynamics Group-Economic Demographic Model and Its Relationship to Planning," presented at a SEADAG Population Seminar held in New York in March, 1975. The only source cited by them in support of the view that availability of savings for capital formation may not be negatively affected by population growth rates is a paper presented by Allen Kelley at the 1973 annual meeting of the Population Association of America. Unfortunately, it has not been possible to locate a copy of this particular paper, but the comments quoted give the general thrust of the argument.

One can envision situations where due to sharp price rises in a major export product, as for example bauxite in Jamaica, the savings rate will rise independently of whether fertility levels change. Other situations would include a higher inflow of economic assistance because of political considerations such as occurred in Vietnam or Taiwan. None of this, however, negates the point that the level of savings could have been higher still if the number of additions to the population was less than had occurred.

There is far greater evidence that higher levels of savings are associated with lower fertility rates. Figure 17 of GE-TEMPO's publication, The Economics of Slowing Population Growth, plots the savings rate against child dependency ratios for 50 countries. There is a clear inverse linear relationship between fertility rates and levels of savings. (The savings rate in Japan is double that of Cambodia; the child dependency ratio of Cambodia is double that of Japan.)

While agreeing that there are situations in which other factors may more than offset the influence of fertility on savings over short periods of time, there is nothing to indicate that the basic inverse relationship between fertility changes and rates of savings is untrue.

The PDG Commentary concludes, "The rate of gross investment of capital formation is best left exogenous. The only assumption is that the gross capital formation is proportional to output." The need to make this simplification and the rationale behind it remains unconvincing. All the PLATO models are supposed to be focussed on the impact of population growth on economic and social development. To make capital formation exogenous is to say that population growth does not affect the rate of savings. Clearly, it would be wiser to argue that if fertility rates fall there are fewer net additions to the population than there otherwise would have been, and consumption is reduced by not having to provide goods and services for as many additions to the population. Part of this foregone consumption may be used to raise living standards of the existing population; part of the foregone consumption, probably at least equal to the average of savings, will be added to the amount available for investment.

The mechanism for relating changes in the savings rate to changes in fertility is relatively simple and is incorporated in virtually every demographic-economic model. To argue for a fixed savings rate contradicts the statement quoted in the PDG Commentary, "a rapidly growing population will be a significant deterrent to the propensity to save." The concept cannot be stated both ways. If it is significant, then make the savings rate responsive to changes in fertility or rates of population growth. Bringing in the idea that "long-term capital inflows from developed countries are an important supplement to domestic investment in most developing countries" merely clouds the issue. The great majority of capital inflows have to be repaid or refinanced at some time. It is very important, eventually, to be able to furnish capital requirements from domestic savings. The need to be independent of external capital assistance is a critical question in developing countries, and it helps to have a model which can reflect these types of considerations. A more conservative path in economic planning is to first postulate that capital formation will be derived from domestic savings. The ability to borrow or obtain external economic assistance is becoming considerably more circumscribed and limited. A demographic-economic model should highlight the consequences of population growth on the ability to generate capital and thus achieve self-sufficiency. Making gross investment exogenous misses this point entirely.

C. PRODUCTION FUNCTION

Related to the question of capital formation is the definition of capital stock. PLATO uses a Cobb-Douglas production function in which the contribution of the factors of production are described in terms of capital stock and the size of the employed labor force (p. 8.) Later, this production function is rewritten in terms of marginal product and the rates of growth of capital stock and labor force. It is not clear which interpretation of the production function is actually used.

The production function used by PDG is written:

$$Y_t = A_t K_t^{\alpha} N_t^{\beta}$$

The coefficients α and β measure the percentage increase in output that occur from a one percent increase in each of the respective inputs. The sum of these coefficients, if greater, equal to, or less than unity, indicates whether output is under conditions of increasing, constant, or decreasing returns to scale. This interpretation is clear enough. What is not clear is whether an actual estimate of capital stock is used in each country. One would think the actual estimates of capital stock are not used; otherwise why is the production function rewritten in terms of marginal product (i.e. additions to output rather than total output). Here K is defined as "the rate of growth of capital stock weighted by capital's share of national income". The PDG Commentary further states that, "a computation of rate of growth of capital stock requires rate of gross capital formation, depreciation rate and capital-output ratio". Any user of the PLATO Economic Model should be fully aware that the adequacy of estimating the rate of growth of capital stock depends on the care and accuracy involved in determining the three parameters on which it is based.

Gross capital formation, however, is left exogenous. Population growth is not allowed to affect the rate of saving and thus capital formation. The only assumption made is that gross capital formation is proportional to output, and no justification of why this should be so is given. The rate of depreciation is also assumed to be proportional to output. This is highly questionable since the rate of depreciation is normally based on and applied to the value of fixed capital; i.e. capital stock.

PLATO uses the capital-output ratio to determine the rate of increase in capital stock. No rationale for changing this ratio is given which means that a fixed capital-output ratio for a given country will be used throughout the projection period. Changes in the capital-output ratio which would normally be affected by the relative growth rates of labor and capital are thereby ignored. The important benefits of increasing the marginal value of labor by decreasing the rate of population growth is missed. The locking in on a fixed capital-output ratio also locks in the relative contributions of labor and capital to output. The ability of population policies to affect the relative shares of income going to labor and capital are thereby negated. All in all, the PLATO model has low responsiveness to demographic factors.

The handling of L, labor, in the production function is lacking in that labor force participation rates are on a combined basis only. Both patterns and levels of labor force participation differ markedly by sex. No meaningful analysis of employment or unemployment can be made without provision of separate participation rates by age for males and females. The estimate of available labor force is clouded by this approach and the determination of employed labor force is equally affected. The problems of unemployment and underemployment are of primary concern in developing countries. No mechanism is built into the model to change participation rates over time (except on an arbitrary basis) and the rate of employment is fixed for the projection period. Again, if the model allowed the savings rate to be affected by changes in the rate of population growth, some of the increase in the rate of investment could be reflected in an increased rate of employment. The inability of the PDG model to be sensitive to demographic changes detracts considerably from the ability to demonstrate the impact of alternative population policies on economic development.

Brief mention should be made of the handling of r, the rate of improvement in technology. This is frequently referred to as autonomous growth and for most developed countries is estimated at about 2 1/2 percent a year and for developing countries at about 1 1/2 percent a year. (Enke, Economics for Development.) The PLATO model has calculated autonomous growth as a residual based on the 1965-1970 or 1960-1970 period in a given country. Many times the residual is affected by fortuitous changes in the price levels of primary export products and undue reliance should not be placed on values estimated from short base periods. Much of this technological growth is embodied in the capital assets that are imported which has little to do with economic policies taken by individual countries. Large variations in estimations

of technology growth complicate and obscure the effects of population growth on economic changes. Biasing of GNP estimates will be less likely if technological growth is uniformly set at 1 1/2 percent for all developing countries.

How the value of "A", the multiplicative factor in the production function, as calculated is not explained. This factor, which permits units of capital and labor to be combined, should be based on time-series data for each country. Was this done and, if so, on how many years' data was this based? The value of the output generated is defined in the PLATO model in terms of gross domestic product. Whereas gross national product is the value of all goods and services produced in a given year by a country accruing to both residents and non-residents of that country, gross domestic product refers to that accruing to residents only. The question of whether GDP or GNP is a more appropriate measure of output depends largely on the purpose for which the analysis is intended. GDP more nearly reflects the amount of goods and services (and income) available to the population. On the other hand, given an substantial degree of foreign investment, part of the value of the output accrues to non-residents, part of the value of the output accrues to non-residents and GNP will be greater than GDP. In developing countries at least, GNP is probably a better representation of the amount of goods and services produced, even though residents cannot share fully in it. The use of GDP clouds the production function because total output is not restricted to meeting the needs of only people who are resident in a country.

The concept of gross national product (GNP) is far more widely used and understood than gross domestic product (GDP). Virtually all demographic-economic models have used GNP as the measure of output and doing so in the PLATO model would facilitate comparisons. The problem of rapid population growth is a far more critical problem for emerging countries than for developed countries. Changes in fertility or population growth will have more impact on changes in GNP than GDP simply because, for developing countries, GNP represents a greater level of output.

Another technical point is concerned with whether the economic model can be disaggregated between agriculture, industrial, and service sectors. The present model implies that the production function is the same for all sectors and that the sectoral composition of the GNP remains unchanged over time. Since the goal in most countries is to enlarge the modern industrial sector, it is likely that the contribution of that sector to GNP will increase; while at the same time, the proportionate contribution of agriculture will decrease. It is quite possible that changes in sectoral shares will also be reflected in changes in the proportionate of capital and labor to output.

At present, the PLATO model assigns values of .5 to both capital and labor for virtually all developing countries as representing the respective contributions of these two factors to output. These estimates of elasticity of output are very crude, and if nothing better can be secured then perhaps a range of possible combinations should be given (i.e. .7 and .3; .6 and .4; and .5 and .5). Certainly no estimates of economic indicators or variables should be made without provision for changing the values of economic parameters.

Also of question is the statement, "in most economies, constant returns to scale is a reasonable assumption." In some countries, such an assumption may be reasonable. More countries, however, are experiencing decreasing returns to scale, and the reasons are not difficult to perceive. Land is not explicitly included in the production function even though agriculture constitutes a major portion of gross national product in many countries. Land is, in effect, subsumed under capital with explicit recognition given only to man-made improvements to land, such as irrigation systems, swamp drainage, and land reclamation. Land, especially cultivatable land, is relatively fixed in extent. To maintain a proportionate increase in output, a doubling of labor must be accompanied by at least a doubling of capital. To the extent that supply of land is subsumed under capital and is fixed in size, capital will be required to increase more than proportionately.

The redeeming feature in most countries has been the increase in technological growth which has offset what otherwise would be decreasing returns to scale. While one cannot foretell whether constant or decreasing returns are likely to be experienced in a country, there may be merit in permitting the PLATO model to reflect these possibilities. Certainly for illustrative purposes, it would be remiss not to provide the flexibility of varying the contributions of labor and capital and of reflecting differences in returns to scale.

What should be provided is an economic model sensitive to demographic changes. The PLATO model provides very little of this sensitivity. It should be possible to reflect an output mix of labor and capital which is responsive to changes in population growth rates. The relative abundance of one factor to the other is an indication of whether the marginal value of that factor is increasing or decreasing. In many countries, the marginal value of labor is considered to be zero or near zero. This is because of the oversupply of labor relative to the scarcer resource of capital. An effective population policy which reduces fertility can result in a labor force smaller than otherwise would have occurred, while at the same time providing an increase in the amount of capital. In such a case, labor becomes

somewhat more scarce and capital somewhat more abundant. The marginal value of labor increases, as a result, which means that workers can receive greater real wages. A good demographic-economic model should be able to reflect these consequences and, at present, the PLATO model is greatly deficient in these respects.

D. OTHER CONSIDERATIONS

One other major methodological question of the PLATO economic model is the use of five year projection periods. This is perfectly adequate for population projections, but is severely deficient for economic projections. There is a vast difference between one-year and five-year lag assumptions. The level of investment or change in size of labor force occurring in a given year can demonstrably affect the output of the following year. Making gross capital formation proportional to output of five years past, however, is simply not warranted. Improvements in the construction of an economic model will be largely offset unless results can be generated on a yearly basis.

There is no problem on how to input population data when projections are made for successive five year intervals. A sub-routine utilizing Sprague multipliers will print out year-by-year estimates of population by age and sex. Appropriate demographic data can be directly inputted into the economic model so as to produce estimates of economic indicators and variables for all intermediate years within a projection period. As it stands, a 25 year economic projection model to the end of the century permits changes in demographic data to affect economic variables only five times. The economic model is basically insensitive to demographic impact; restricting demographic inputs to only once every five years makes the model even more insensitive.

There are a number of other aspects of the economic model which could be mentioned. Changes in fertility are assumed costless. Consideration could be given to assessing the costs of family planning against resources otherwise available for investment. The values of the economic parameters and coefficients are seldom derived from country-specific time series data. The relationships between economic variables are far less precise than would seem to be indicated.

What this implies is that alot more work and care needs to be put into the economic model. There is a real question of whether the economic model should not, in fact, be supplanted by models provided by GE-TEMPO or the LRPM of the Bureau of Census. The PLATO Economic Model is inadequate even for

demonstration purposes. In the report on the seminar on the Role of Economic-Demographic Models in Development Planning, sponsored by SEADAG in March 1975, the PDG Director, is quoted as saying, "There should be a general model with enough texture to demonstrate the impact of alternative demographic rates on the economy as a whole." (p. 19) If this be so, the PLATO model is severely limited in this regard.

The lack of linkage between the demographic and economic models (and others) in the PLATO system is defended on the basis "that the effort required to make the external linkages is more than compensated for by the opportunity given the user to enter his own judgments into the model." This is highly questionable. What informed judgments is the user expected to substitute? How does this fit with the idea that PLATO can be used by those with little or no training in demography or economics? Can certain parameters be changed without also affecting other parameters?

Further defense of the very simple PLATO model is given on page 27 of the SEADAG report. "Handler argued that previous models may have failed to influence planners because they included too many feedback linkages so that their complexity compromised their usefulness. Integration of a vast array of coupling coefficients between variables with only marginal support from relevant empirical evidence tends to weaken rather than support the whole system and hinder effective communciation." Such statements misrepresent the situation. Relating the impact of population changes to economic variables constitutes a direct linkage only. Unless changes in economic variables were in turn related to changes in demographic parameters, which is not the case, there is no feedback linkage. The complexity of having to supply user's judgment in place of linkage provided by the model is far more likely to compromise the usefulness of the exercise. As to the "vast array" of coupling coefficients between variables with only marginal supportive evidence, the number of such relationships is limited and much of the evidence is far more than marginal. Linkages demonstrating the impact of population on economic variables may likely be preferable to ignoring such relationships and denying their impact, evidence for which may be even less well supported.

The issue of undue complexity is not a real one. The issue is one of constructing an adequate rather than an inadequate economic development model. The population projections model is deficient in several regards. The combination of inputting imprecise data generated by the demographic model into a grossly oversimplified economic model leads to misleading

and erroneous results. The assumption that such an economic-demographic model can be used for planning as postulated in the PDG paper presented at SEADAG Seminar is simply not warranted.

E. SUMMARY OF RECOMMENDATIONS CONCERNING THE ECONOMIC DEVELOPMENT MODEL

1. Relate savings rate to changes in population growth. (Base capital formation on domestic savings.)

2. Use estimates of capital stock.

   a. Base depreciation of value of capital stock.

   b. Assume a fixed level of autonomous growth for developing and developed countries, unless very adequate time series data indicate a more appropriate value. (1 1/2 percent for developing; 2 1/2 percent for developed countries.)

   c. Allow capital-output ratio to be determined by model rather than fixed exogenously.

3. Use GNP rather than GDP for measurement of output.

   a. Provide range of combinations of elasticities of output for capital and labor.

   b. Provide for other than constant returns to scale.

4. Provide labor force estimates and participation rates by age and sex.

5. Include costs for fertility reduction.

6. Make yearly economic projections. (Convert population projections into single-year estimates by use of Sprague multipliers.)

V. CRITIQUES ON SOME OF THE ADDITIONAL PLATO MODELS

A. ENERGY DEMAND MODEL

The PDG Commentary on demand for energy is extremely brief and there is virtually no explanation covering the selection of the variables employed.

The energy model uses data from the population projections (total only -- not male and female), combined labor force participation rates, and two consumption variables, Q and R. Q is defined as the energy consumption in kilograms of coal-equivalent per economically active person per year. R represents the annual rate of increase in energy consumption. The linkage equation is that Q will increase with time at the annual rate, $R(Q_{t+5} = Q_t e^{5R})$. Energy demand is then calculated as the product of Q and the number of persons in the labor force: Q x LF.

Labor force rather than total population is used presumably because production of goods and services (and thus energy needed to make them) is related to the size of the economically active population. This may have some bearing on energy demand, but the model ignores several other factors which may have an even greater relevance, such as: in what sectors are persons employed; do participation rates disguise considerable underemployment; how much of the employment is subsistance or marginal; what structural changes are occurring in the economy; what level of socio-economic development has been reached; how much of a barter economy is present; to what extent are non-measured energy resources included and available for the future (the gathering of wood constitutes the primary energy source for 2/3 of the countries of the world); and lastly, what impact on demand is caused by changes in price structure?

The use of an exponential relationship for per capita use of energy, increases the demand dramatically in a relatively short period of time. Such a relationship is unrealistic. It is much more probable that an energy growth curve will flatten out and that the percentage increase will decrease as the base on which it is calculated increases. There is some question on the wisdom of even projecting such demands since availability of domestic energy resources, and the ability to purchase such resources from abroad, are formidable constraints. Plotting a growth curve based on individual country time-series or based on other countries having experienced the same levels of socio-economic development might be an improvement, but the present estimates are perhaps worse than none at all. No information has been

furnished of the PDG-Energy contract with the National Science Foundation which presumably employs a more sophisticated construct for estimation of United States needs. Perhaps part of this is applicable to developing countries. Failing some more empirical demonstration of energy demand relationships, it is recommended that the energy model be dropped from the PLATO system.

B. EDUCATION COSTS AND ENROLLMENTS MODEL

The model on education costs is much more in line with other similar models as developed by GE-TEMPO and others. Some parts of the educational model, such as the number of new teachers needed annually, could be fitted more readily if Sprague multipliers were used in the basic population projection model so as to provide annual population estimates by sex and age. (The term "additional" teachers might be more appropriate than "new" teachers, since many new teachers are hired to replace those who have retired or left for other jobs.)

A key part of the model involves application of age-specific enrollment ratios. (Age 6, 7, 8, 9, 10, 11, 12, etc.) In the Appendix, a method of calculating age groups is described using interpolation coefficients derived from the Karup King formula. This can produce estimates for age groupings such as 6-11, 12-17, and 18-22. PDG should be complimented for applying more sophisticated methodologies, but these techniques stand in stark contrast to the crudeness of the population projection methodologies employee. The PDG Commentary does not explain what adjustments, if any, are made for the varying age groupings found in different countries for elementary, intermediate, and higher levels of education. Primary education ages, for example, can range between 6-13 (United States) to 7-10 (Brazil). Good estimates not only of age groupings, but in some cases of specific ages, are needed because of marked differences in enrollment ratios. In Latin America, the median years of schooling completed is two years. Also highly significant is the fact that three-quarters of all students are concentrated in just the first two grades. A model of education demand needs better population estimates than are now provided if it is to adequately demonstrate the full impact of population growth.

There is also a major difference in enrollment ratios between males and females in most developing countries. The Education Model ignores this because reliance is placed on a total population projection only. It has been demonstrated conclusively that levels of education, particularly for females, are inversely associated with levels of fertility. The benefits of education to provide women with the opportunity of gainful employment, or as an alternative to early marriage and child

birth, is also widely recognized. For this and several other reasons, it is recommended that the education model reflect enrollment by sex. The use of a combined sex population projection model seriously weakens the results obtained from a relatively sophisticated education demand model. The Education Model is the most adequate of the constructs comprising the PLATO system, but unless or until a methodologically sound two-sex population projection model generates the needed demographic inputs, the results of the Education Model cannot be taken seriously.

C. CONTRACEPTIVE COVERAGE MODEL

This model is supposedly based on Manual 6, A Technique for Projection of Family Planning Targets and Quotas Required to Attain Demographic Objectives. (Donald Bogue, et al., Community and Family Study Center, University of Chicago). It is doubtful whether the authors of this manual could recognize their handiwork as translated to the PLATO model.

A basic assumption involves use of a "fecundity rate", the biologically maximum number of children it is possible to have in the absence of family planning. Fecundity is virtually impossible to measure. Hutterites in this country have averaged over a dozen children per couple. Much depends on nutrition, climate, and other health conditions. As a measurable concept, there is no country in the world that can estimate a "fecundity rate."

The PDG group, however, sets this rate at 9.0 and further assumes any further improvement in decreasing fertility rates should be ascribed to contraceptive practice. Since the total fertility rate is a much closer approximation of what fertility otherwise would be in the absence of family planning, using an assumed fecundity rate greatly overestimates the need for contraceptive coverage.

The PLATO model leaves out consideration of clientele mix by age and parity, contraceptive mix (pills, IUD's, and other), the clinical effectiveness and use-effectiveness of contraceptives, and dropout or retention rates. The model is so methodologically inadequate that any thoughts of using it to measure contraceptive needs or client workload should be totally abandoned.

VI. USES AND LIMITATIONS OF THE PLATO PROGRAM

A. DOCUMENTATION OF THE PLATO MODELS

Documentation concerning the assumptions, construction, and applications of the PLATO Population Projection Model (and all other models comprising the system) is greatly needed. The PDG Commentary prepared for the demographic model marks a significant step forward and no person can intelligently use or interpret the results of the PLATO system without it. Considerable effort has gone into explaining the concepts and methods employed. These efforts are limited largely by the design of the model itself. A great number of tables and charts lack identifying captions and sources of data are not indicated. Some of the descriptions do not follow conventional demographic terminology and some of the concepts, especially those relating to cohort and period measures, get confusingly intertwined in different places.

Preparation of this documentation, however, does not resolve a number of issues, the foremost being the identification of the audience for which the material has been produced. If "user" is defined as a person receiving a population awareness demonstration, the material is far too extensive and technical for his needs. Such a person does not have an understanding of the relevant variables of the model and it is questionable whether he can interpret clearly the impact of the operating factors. However, if "user" refers to those who have some knowledge of demographic analysis, a different type of dissatisfaction is likely to be encountered. Much of the methodology is too simple to be sufficiently informative about the population dynamics of a given country. Additional descriptive material is not particularly useful unless the model were made sufficiently sophisticated to provide adequate analytical value.

B. USER'S MANUALS

Detailed instructions on how to request and how to use the display options available for each particular PLATO program are contained in the PLATO IV User Manual. In addition, there are drafts available on How To Edit PDG Data -- User's Guide to Editing Data Base in Popdata and Population Dynamics Group Data Structure. A draft of a User's Manual - Economic Development Program has also been prepared.

The Manuals are, in general, sufficiently explicit and adequate for their purposes. Some suggestions received from users to simplify operations (mostly in not having to go back to the beginning stages) have already been adopted and the process of obtaining graphics and generating data has been speeded up. Other modifications may be indicated if the models are more interrelated, or if some of the methodological assumptions are changed. By and large, the ease of operation and the ability to display data is adequate for present purposes.

C. FIELD APPLICATIONS

The instructions on the use of PLATO IV are not so self-evident that it becomes feasible to have most participants attempt to operate it themselves. Practice is necessary to become proficient, and programs or sub-programs which are less frequently used may pose a problem. The fact is that PLATO was originally designed to be used for population awareness demonstrations. There are a great number of options and applications which are seldom utilized in the PLATO demonstrations which form the bulk of present usage.

Few of these possibilities accrue to third-country participants at present. Some who are students at U.S. institutions which teach population courses (Universities of Denver, Pittsburgh, and North Carolina) may get greater utilization of PLATO. Students of Dr. Vaida Thompson, the PLATO coordinator at North Carolina, have already received class instruction and done term papers based on the use of PLATO. Plans are in process at Denver, Wisconsin, and Pittsburgh to incorporate PLATO into introductory courses in population problems. Faculty at each of these institutions, however, have clearly indicated that PLATO cannot be used in teaching demography or economic development courses unless the methodologies are improved and the models made more sophisticated.

D. THE USE OF PLATO FOR POPULATION DYNAMICS DEMONSTRATION PURPOSES

There has been a marked increase in the number of persons receiving demonstrations at PLATO terminals as shown in Table 3.

On the basis of gross funding, which was slightly in excess of $1 million through June 1975, the cost is approximately $100 per person for the estimated 9,145 officials and participants who were given PLATO population demonstrations. This includes model development costs which, on a pro-rated basis, should decline in the future. The average cost per person in FY 75 was lower than in the year previous, but the number of persons receiving PLATO demonstrations per year is unlikely to increase in the future.

TABLE 3

BREAKDOWN OF PDG PROGRAM USAGE

PLATO Terminal Demonstrations	Champaign -Urbana	Washington -Arlington	Airlie House	Denver	North Carolina*	Pittsburgh*	Total
Total Participants							
FY 74	(4,000)	(691)	(531)	(116)	(17)	(151)	(5,788)
FY 75	5,000	987	760	184	498	416	8,345
Total Foreign Nationals							
FY 74	(500)	(342)	(473)	(116)	(4)	(50)	(1,510)
FY 75	600	426	598	176	107	121	2,078
Total Americans							
FY 74	(3,500)	(349)	(40)	(---)	(13)	101	(4,278)
FY 75	4,400	561	162	8	391	295	6,267
World Population Conference in Bucharest, Romania - August 1974.							700
GRAND TOTAL							9,145

*Not fully operable FY 74.

The percentage of foreign nationals witnessing PLATO (excluding the World Population Conference) was 26.1 percent in 1974 and 24.9 percent in FY 1975. While it is desirable that appropriate AID and other American officials become acquainted with the PLATO population program, the real payoff for AID is in providing third country nationals with an awareness of the population problem. With foreign nationals comprising only about one-quarter of the users of PLATO, the effective cost of reaching these people is actually considerably higher than the estimated overall cost of $100 per person.

A number of PLATO population demonstrations were observed in the Washington area and at other locations. All personnel were well-motivated and hardworking. Physical facilities and greater time availability made demonstrations in university settings somewhat more relaxing and of greater time duration. This is not meant as a reflection of PLATO personnel in the Washington area, but rather indicates the need for better scheduling by the Washington International Center (WIC). On some days the demonstrations were overbooked and participants were crowded together while on other days no demonstration were scheduled.

The effectiveness of the PLATO demonstration is lessened when there are too many people present at one time, especially when there is a wide diversity of countries represented. Any number of viewers greater than six poses the problem of being able to see the display screen. Larger groups limit the ability to make specific country projections and inhibit participant discussion. The screen can be enlarged up to 30" x 30" and is available from GE at a cost of $20-25,000. Better coordination and scheduling, mostly on the part of WIC, can keep the size of participant groups small and eliminate the need for obtaining a larger sized screen.

There is little doubt that the majority of those receiving the PLATO demonstration have reacted favorably to it. The visual graphics provided by the plasma screen are particularly effective and the ability of the computer to capture interest and provide almost instantaneous data is an extremely desirable feature. The way in which the graphs are constructed and alternatives plotted holds the attention of viewers and, on an awareness level, PLATO can be very effective.

Somewhat less certain is just how much the viewer has learned or what concepts he will be able to apply in his own situation. Presentation tends to be somewhat standardized with the same instructor, but differences in approach and content have been noted between instructors and locations. Flexibility in adapting the presentation to different interests also varies, as does the ability to elicit meaningful group participation and involvement.

The great majority of evaluation forms turned in by participants have been favorable. These evaluations indicate a good measure of acceptance, although the majority of comments are superficial in nature. There is an understandable tendency when one is a guest in a country to refrain from comment unless something favorable can be said. A better indicator of the effectiveness of the PLATO demonstration would have come from interviewing participants sometime later on an individual basis. This unfortunately has not been done and it is difficult to appraise just how much any participant really learned, and whether the basic concepts underlying population dynamics were understood.

In viewing PLATO demonstrations, one is concerned whether the sophisticated technology employed in displaying graphics overshadow the content of what is to be imparted. The plotting of lines and display of lights may divert attention from the substance of what is being demonstrated to the manner by which it is expressed. Some understanding of demographic terminology is also needed to fully understand the PLATO demonstration. Terms such as total fertility rate, age-specific fertility rate, and dependency ratio are introducted into presentations to persons having little or no demographic background.

It should be recognized that PLATO by itself is not a self-contained demonstration of population dynamics. Nothing is covered concerning the historical basis of population growth, or the theory of demographic transition. No answer is given as to why in the last 30 years the world has found itself beset with a "population explosion" never before experienced. Despite the time constraints generally prevailing, it would add considerably to the understanding of the importance of population growth to development if some of this background were sketched before going into the actual projections.

The recent addition of a hard copy printer to the PLATO terminal at Washington-Arlington adds another dimension to the population awareness presentations. A considerable number of participants have requested that printouts of certain projections for their country be furnished (population, GNP, education, and energy). This is most understandable and gives the participant something tangible to review and study at a later date. What may not be good, however, is that many hold computer technology in awe and proceed on the basis that use of such sophisticated means must result in sophisticated results. Cautions that the data generated is only illustrative of general trends are not generally given, and most participants (and AID officials) treat the data as though it represented accurate predictions. This misapprehension had been a major problem before the advent of the printer and making hard copies available tends to reinforce this belief.

The presentations deal very largely with actual numbers. Alternative methods of presentation, such as index numbers or proportions, are shunned because participants, according to those giving demonstrations, prefer to deal with absolute data. The use of ratios or proportions indicates very well the differences in impact between fertility trends, for example, but without the necessity of having to ascribe actual numbers to alternative projections. Conceptually, it is more important for the participant to know that income per head will grow more rapidly under conditions of lower population growth rates than otherwise. What the actual per capita income may be at a future date is much less important than that its growth is aided by conditions of reduced fertility. There are many examples of these types of relationships and using absolute data is not always the best means of understanding such relationships.

There will still be many situations where projections should be presented in terms of actual populations, dollars of product, or numbers of school children. The majority of users lack the background to know the limitations of the models. The assumptions and constructs employed are beyond the user's ability to assess their adequacy. This being the case, no amount of warning will persuade them that the results should not be taken at face value. They have no way of realizing that a poorly constructed model will give poor and imprecise results.

PLATO is best used for demonstration purposes. Limiting it to this level of application does not justify failing to improve the construction of the various models that comprise the program. The PLATO models do not approach the degree of sophistication found in the LRPM or GE-TEMPO models, nor do they need to if confined to basic instruction. But the present models are so overlysimplified that they are poor simulations of reality and the data generated should not be used, not even for demonstration purposes.

At the outset of this evaluation, it was thought possible that certain, more sophisticated models on economic development, education needs, and welfare outlays, could supplant or be made complementary to existing PLATO models. While technically possible, such a course is not really feasible. Developers of more sophisticated models recognize that technical assistance on a continuing basis is needed for planning and policy uses in individual countries. More detailed knowledge of conditions in particular countries and adaptations to the model must be made for all serious applications. There is understandable reluctance on the part of the other model builders to have these more advanced models incorporated into the PLATO system in which little or no ongoing technical assistance can be given.

Another limitation to bringing non-PLATO models on line are the somewhat different data needs. Substantial additional data would have to be stored, and in other cases there are conceptual differences in measurement (i.e., GDP v. GNP).

PLATO does not at present have sufficient sophistication of model constructs to be used for extended instructional or planning and policy purposes. Both GE-TEMPO and LRPM are much better equipped for these purposes and there seems little need for PLATO to also serve such purposes. For planning purposes, the need for visual graphics or immediate computer response is not an important factor. Generation of planning and policy data by usual computer facilities is adequate for such purposes. The recommendation is that the scope of PLATO be limited to population awareness demonstrations.

E. USE OF THE MINI-COMPUTER

Funding has been provided by AID to cover the cost of installing one free-standing PLATO Mini-Computer. The purpose of the Mini-Computer is to free the PLATO system from dependence of being tied-in to the Urbana, Illinois, computer terminal, thus permitting operation of PLATO at overseas locations.

The Mini-Computer System proposed by the Population Dynamics Group is technically sound. It is well designed, utilizes proven technology, and is operating on a computer configuration that has received wide acceptance. The use of the Mini-Computer does however, require additional comment. The basic price of $50,000 per installation is substantially understated for the type of support services that will be required. The price does not include instruction of consultation services beyond the initial installation period. Further, the price does not include funds for transportation and related expenses incurred for normal maintenance of the system. Although the Population Dynamics Group recognizes the necessity of providing regular machine maintenance, they are assuming that the software system is "error proof".

The ability to obtain hard copy output from the Mini-Computer models is highly desirable; however, this capability does not currently exist. Further, the proposed hardware configuration will not support the generation of hard copy outputs. According to the PDC staff, an additional six to twelve man-months of design and programming effort would be required to develop such a capability. In addition, the basic cost of the computer configuration would increase by $5,100 to $37,600 per computer, depending upon the printing device selected.

Technically, the Mini-Computer System could be adapted to operate on any compatable "in-place" computer; that is, it could be modified to function on a compatable computer that is currently being used in a host country. Where compatable computers exist, an undetermined level of additional funding would be required to modify the system to function on each unique configuration. Further, unless the host country computer is regularly used in a time-sharing interactive mode, the impact of the Mini-Computer System on host country technical staff would be substantial.

The use of the Mini-Computer System, which is based on the PLATO system of models, will not give results sufficiently advanced for planning and policy usage, and will duplicate two other systems already developed for these purposes. The Mini-Computer, if used for demonstrations of population dynamics, is expensive relative to its possible utilization. In any given capital city, or in any given regional center, the number of people who can benefit from such a demonstration is relatively limited.

The initial proposed site of a Mini-Computer System is Bangkok where it can be used on a regional basis by ESCAP. This is probably about the best situation that can be obtained. ESCAP has several trained demographers and economists on its staff and has the expertise to analyze population implications on national development. The same limitations of the PLATO model system apply to the Mini-Computer System. Although it is technically possible to develop or enter in locally developed modifications to models, to do so would impair the integrity of the system as provided by PDG members in Urbana. There may also be a question of AID supplying a computer to a UN-funded agency instead of the UN budgeting for the Mini-Computer System itself.

There may likely be a misapprehension on the part of the ESCAP who see themselves acquiring a computer capability which they would like to use for their own studies. The oversimplified PLATO models do not generate good quality data, and the Mini-Computer System does not lend itself to allow other models to be developed by host country nationals. Since "standard" output devices, i.e., printer, are not included in the proposed computer configuration, new technology would have to be imparted in order for host country nationals to utilize the on-line plasma terminal.

In sum, it is doubtful that there is sufficient demand for population demonstrations elsewhere in the world to justify the installation of a Mini-Computer System. The PLATO system which is incorporated in the Mini-Computer System is inadequate for planning and policy purposes. Further, the investment in developing Mini-Computer Systems for overseas usage is not warranted.

APPENDIX

TECHNICAL REVIEW

The technical review of the Population Dynamics Group (PDG) MINI System was conducted under three basic premises. First, the PDG MINI System will be installed in approximately five developing nations, which are yet to be identified. Second, the PDG MINI System will be used for the purpose of giving demonstrations concerning the implication of population growth. And third, other models should be made available through the PDG MINI System.

In preparation for this technical review, interviews were conducted with Mr. Elven Riley (Population Dynamics Group), Mr. Phillip Steel (Data General), and Mr. Henry Cole (GE-TEMPO). In addition, the following reference materials were analyzed:

- Real-Time Disk Operating System (RDOS) User's Manual
- ECLIPSE Computer Systems
- User's Manual, PROGRAM Extended BASIC
- Seminars in Population Dynamics and Economic Development
- PLATO IV Commentary
- PLATO IV User's Manual
- Running the Energy and Population Models on the MINI
- Educational Cost and Enrollment Rates Program, Part IV
- DEMOS: Demographic-Economic Models of Society, A Computer Learning System

THE POPULATION DYNAMICS GROUP MINI SYSTEM

The Population Dynamics Group, University of Illinois, has transferred four Population and Energy Programs from the PLATO System to the PDG MINI System. In addition,

they have developed two new models to operate exclusively on the MINI. The MINI System consists therefore, of a General Population Model (120 countries), a Food Model (120 countries), a Energy Supply/Demand Model (120 countries), a World Energy Trade Model, a U.S. Energy Supply/Demand Model (new), and a U.S. Energy Demand Model (new).

The PDG MINI System is operating on a Data General ECLIPSE System. The schematic diagram below represents the minimum hardware configuration required by MINI.

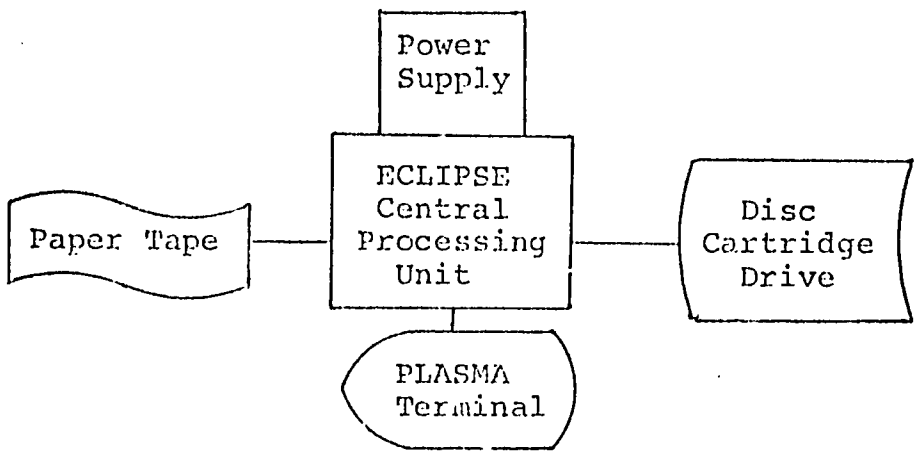

The configuration consists of an ECLIPSE Central Processing Unit (CPU) with a capacity of 32,000 16-bit words, a power supply unit, a paper tape unit, a disc cartridge drive with a DIABLO disc pack, and an interactive display terminal (PLASMA). This particular CPU and a wide variety of peripheral equipment is currently operational in more than 130 installations outside the United States. Although it requires a controlled environment (air conditioning) it has a higher degree of environmental tolerance than standard large-scale computer systems.

ON-SITE SUPPORT REQUIREMENTS

According to the Population Dynamics Group staff, the proposed fee of $50,000 per host country site includes personnel costs for hardware and software support services for one year, as well as installation and instructional support. A standard one-year maintenance agreement will be signed with Data General to provide for the installation

and maintenance of ECLIPSE hardware and software systems; PDG will install and maintain the PLASMA terminal and the MINI System, and will provide the initial instructional support services.

ECLIPSE will receive a standard monthly Preventive Maintenance (PM) analysis by Data General technicians. If problems occur with the ECLIPSE hardware/software systems between PM visits, host country sites will have to request immediate assistance, or wait until the next scheduled visitation. Data General does have experience in supporting installations outside the United States. They currently have international offices in Australia, Austria, Brazil, Canada, Costa Rica, Denmark, England, Finland, France, Hong Kong, Israel, Japan, Malaysia, Mexico, Netherlands, Puerto Rico, Scotland, Singapore, Spain, Sweden, Switzerland, and West Germany.

The Population Dynamics Group will provide initial on-site instructional assistance for an undefined period of time; estimated at one to three weeks per site. They do not intend to provide host countries with continuing instruction or consultation services beyond the installation period. All PDG support services will be conducted from the campus of the University of Illinois. PDG does not anticipate any problems with the PLASMA terminal or the MINI System. Standard procedures have not yet been developed to communicate host country problems, real or imagined, with the PDG staff at the University. If error conditions in the software systems should occur, the PDG staff expects to make the necessary corrections; however, the vehicles for identifying errors and updating corrections do not currently exist. Software maintenance can be provided in a variety of modes; however, factors such as distance, language, local customs, and sophistication of host country nationals must be accurately measured in order to develop a workable solution.

The MINI System will be installed and maintained in the host countries on a single DIABLO Cartridge Disc. In order to ensure the integrity of the MINI System, all modifications to the contents of this disc will be made by PDG staff members only. This precludes the local modification of programmed models and data.

MODIFICATIONS TO THE MINI SYSTEM

The MINI System currently consists of six models. After October, 1975, the PDG staff plan to convert the remaining

population models currently operating under PLATO and develop additional models for the MINI System. All models operating under the PLATO System are written in the TUTOR language, while models operating under the MINI System are written in the BASIC language. PDG estimates that existing models can be converted from PLATO to MINI at an average rate of two man-months per model. Further, the single DIABLO cartridge disc should be sufficient to house a total of fifteen to twenty models.

It has been suggested that the MINI System be modified to produce optional hard-copy reproductions of graphs displayed on the terminal. Although the PDG staff professes to have the technology for converting terminal images to hard-copy, the capability itself has not yet been developed. Accordingly, the PDG estimates that this facility could be developed in approximately six to twelve man-months. This estimate seems rather high and probably covers all contingencies. An estimate of three to six man-months should be sufficient. If a hard-copy option is developed for the MINI System, the hardware configuration must be upgraded to include a printing device. The I/O Interface, Line Printer Control, and printing device will cost between $5,100 and $37,600 per computer.

Models, other than the PLATO models, could also be converted to operate under the MINI System. The justification for conversion would have to be done on a model by model basis. For example, the DEMOS model developed by GE-TEMPO is written in the FORTRAN IV language and is currently operational on the CDC 6000 Series and the IBM 360/65 operating under full OS. The DEMOS model requires approximately 230,000 bytes of core storage. If the DEMOS model capabilities are of sufficient value to be included within the framework of the MINI System, the model should be rewritten, as opposed to translated to the BASIC language. Although the GE-TEMPO model was not analyzed as part of this technical review, I would estimate that approximately one man-year of effort would be required for a comprehensive rewrite. In addition, stand-alone documentation suitable for consumption by host country nationals would have to be developed. GE-TEMPO feels that the DEMOS model is most useful when it is supporting a continuing dialogue between the instructor and a planner.

Each model chosen would have to be converted from its present language to the BASIC language. In addition, new models must be made operational within the 32,000 16-bit

word restrictions of the existing proposed configuration. Models currently operating in a batch processing environment would have to be rewritten for the interactive terminal environment. This task is not dependent solely upon the PLASMA terminal, but applies to any interactive terminal selected.

The existing MINI System has been designed to a modular fashion so that standard programmed CALLs can be used to display information on the terminal. The design of the system should aid the development of new models, as opposed to hindering the addition of new models. In addition, it should be a relatively minor task to change the formulas of existing models and to provide for the modification of additional variables.

OTHER STATISTICAL CAPABILITIES

The ECLIPSE System does not include any standard statistical capabilities such as CENTS-AID, the Statistical Package for the Social Sciences (SPSS), BIOMED, or the Scientific Subroutine Package (SSP). The development of standard statistical measures would have to be programmed from scratch.

OTHER APPLICATION SYSTEMS

In addition to hardware (that which can be touched), the Data General ECLIPSE System includes a variety of software support features, including a real-time operating system and four compiler languages: Extended ALGOL, Real-Time FORTRAN IV, Extended BASIC, and an Extended FORTRAN V. A variety of commercial packages are also available for the ECLIPSE System. These commercial packages include:

- Daconics Word Processing System; a generalized text editor.

- Barrister/300; a generalized accounting system which includes modules for accounts receivable, account payable, payroll, etc.

- PELAM INC Medical Systems; patient histories, prescriptions, hospital payroll, billing, etc.

- Cullinonic/IDMS; Data Base Management System.

Under the basic premises of this review, it is not recommended that additional applications be considered for the ECLIPSE System.

UPGRADING ECLIPSE

The ECLIPSE computers are available in single-processor, dual-processor, multi-processor, and distributed computing systems. In essence, it is a very powerful computer system that can be applied to a variety of applications. Data General offers a full range of peripheral devices for upgrading the basic computer configuration proposed. The list of peripheral devices includes: fixed head discs, cartridge disc drives, disc pack drives, magnetic tape sub-systems, tape cassettes, line printers, card readers, perforated tape units, plotters, video display terminals, and teletypewriters.

ALTERNATIVE COMPUTER CONFIGURATIONS

Any computer configuration other than the Data General ECLIPSE System would require sufficient core storage capacity (32K 16-bit words), a BASIC language compiler, a time-sharing operating system, an interactive graphics package, and compatable peripheral devices. Although many computer manufacturers offer all of the services required, conversion costs would be incurred. The Population Dynamics Group is optimistic that these costs would be minimum.

SUMMARY

Technically, the choice of the Data General ECLIPSE System is a cost effective means of supporting the PDG MINI System. Data General's experience in installing and maintaining over 130 remote sites gives them valuable experience in supporting host country computers at an operational level. Although it is deemed to be technically possible to convert the MINI System to function on other hardware devices that may already exist in host countries, I would not encourage this course of action. In addition to the cost of converting the system, the implementation of a time-sharing operating system into a computer installation that does not normally support that type of system is a potential (certain) problem of the first magnitude.

Similarly, the proposal should be evaluated on its own merits without consideration as to additional software

systems that could occupy the computer when it is not being used for demonstration purposes. Numerous technical considerations become critical by including alternative applications in the review process.

The proposed fee of $50,000 per host country site is not inclusive. Although, according to PDG staff, the figure includes estimated personnel costs for installation, instruction, and maintenance; it does not include fees for travel and related expenses. Further, I suspect that the estimates are unrealistically optimistic. The PDG staff has stated that they do not anticipate any problems with the interactive terminal or the MINI System. I am very impressed with the technical capabilities of the PDG staff, however, their lack of experience in supporting remote sites leads me to suspect that they have underestimated actual support needs. They will find that it is expensive to solve minor technical problems, when remote sites are at a great distance, and where host country nationals are not as highly skilled.

Each time that I have seen the models operate, a highly skilled professional demonstrator was in charge. I am of the opinion that without a continuing interaction between an instructor and a student, the impact of the MINI System will soon diminish. Therefore, it is recommended that the proposal be modified to include the services of a full-time instructor for each of the five host country sites.