Pocket Book

for Power Distribution System Construction Drawings

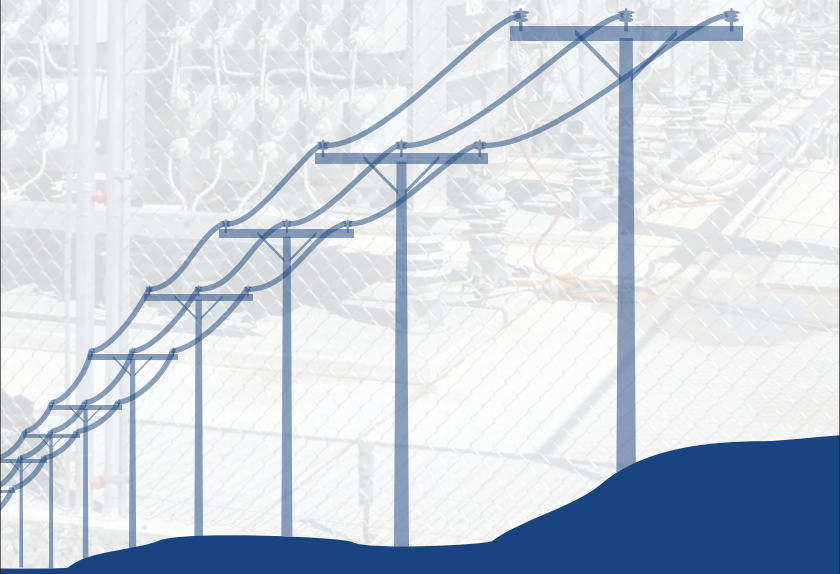

USAID
FROM THE AMERICAN PEOPLE

USAID Power Distribution Program

USAID FROM THE AMERICAN PEOPLE	USAID POWER DISTRIBUTION PROGRAM	Drawing No. Data Charts

POWER DISTRIBUTION CONSTRUCTION DRAWINGS AND RELATED TECHNICAL DATA

Sr. No.	SUBJECT	DRAWING NO.	PAGE NO.	SOURCE
	PART I - DRAWINGS			
1	11 KV SINGLE CROSS ARM ASSEMBLY 1-L	ES/DD - 1L	1	SDI-40
2	11 KV SINGLE STEEL CROSS ARM ASSEMBLY 1A-L	ES/DD - 1AL	2	do
3	11 KV DOUBLE CROSS ARM ASSEMBLY 2-L FOR LATTICE STEEL POLE	ES/DD - 2L	3	do
4	11 KV DOUBLE X-ARM (STEEL) ASSEMBLY 2A-L FOR LATTICE STEEL POLE	ES/DD - 2AL	4	do
5	11 KV VERTICAL ANGLE ASSEMBLY 3L (WITH EXTENSION LINK) FOR LATTICE STEEL POLE	ES/DD - 3L	5	do
6	11 KV VERTICAL ANGLE ASSEMBLY 4L (WITHOUT EXTENSION LINK) FOR LATTICE STEEL POLE	ES/DD - 4L	6	do
7	11 KV VERTICAL DEAD END ASSEMBLY 5L (WITHOUT EXTENSION LINK) FOR LATTICE STEEL POLE	ES/DD - 5L	7	do
8	11 KV HORIZONTAL SINGLE DEAD END ASSEMBLY 7L (WOODEN CROSS ARM) FOR LATTICE STEEL POLE	ES/DD - 7L	8	do
9	11 KV HORIZONTAL SINGLE DEAD END ASSEMBLY 7AL (ANGLE IRON X-ARM) FOR LATTICE STEEL POLE	ES/DD - 7AL	9	do
10	11 KV HORIZONTAL SINGLE DEAD END ASSEMBLY 8L (STEEL CROSS ARM) FOR LATTICE STEEL POLE	ES/DD - 8L	10	do
11	11 KV HORIZONTAL SINGLE DEAD END ASSEMBLY 8L (STEEL CROSS ARM) FOR PCC POLE	ES/DD - 8AL	11	do
12	11 KV HORIZONTAL DOUBLE DEAD END ASSEMBLY 10L FOR LATTICE STEEL POLE	ES/DD - 10L	12	do
13	11 KV HORIZONTAL DOUBLE DEAD END ASSEMBLY 10L FOR LATTICE STEEL POLE	ES/DD - 10AL	13	do
14	11 KV OFFSET SINGLE CROSS ARM ASSEMBLY 15-L FOR LATTICE STEEL POLE	ES/DD - 15L	14	do
15	11 KV OFFSET DOUBLE CROSS ARM ASSEMBLY 16-L FOR LATTICE STEEL POLE	ES/DD - 16L	15	do
16	11 KV CROSSOVER AND TAP ASSEMBLY 20-L FOR LATTICE STEEL POLE	ES/DD - 20L	16	do
17	11 KV CROSSOVER AND TAP ASSEMBLY 20-L (STEEL X-ARM)	ES/DD - 20AL	17	do

USAID FROM THE AMERICAN PEOPLE	USAID POWER DISTRIBUTION PROGRAM	Drawing No. Data Charts

18	11 KV CROSS OVER AND TAP 21L (FOR EXISTING LINE)	ES/DD - 21L	18	do
19	11 KV CROSS OVER AND TAP ASSEMBLY 21L - STEEL X-ARM (FOR EXISTING LINE)	ES/DD - 21AL	19	do
20	11 KV TEE-OFF ASSEMBLY 22L	ES/DD - 22L	20	do
21	11 KV TEE-OFF ASSEMBLY 22L (STEEL X-ARM)	ES/DD - 22AL	21	do
22	11 KV TEE-OFF ASSEMBLY 23L (FOR EXISTING LINE)	ES/DD - 23L	22	do
23	11 KV & 400 VOLT COMPOSITE IN LINE ASSEMBLY 40L	ES/DD - 40L	23	do
24	11 KV & 400 VOLT COMPOSITE SMALL ANGLE ASSEMBLY 41L	ES/DD - 41L	24	do
25	11 KV & 400 VOLT COMPOSITE SMALL ANGLE ASSEMBLY 41AL	ES/DD - 41AL	25	do
26	11 KV & 400 VOLT COMPOSITE DEAD END ASSEMBLY	ES/DD - 42L	26	do
27	11 KV & 400 VOLT COMPOSITE DEAD END ASSEMBLY (STEEL X-ARM)	ES/DD - 42AL	27	do
28	SKETCH SHOWING TRANSPOSITION CENTRAL PHASE OF 11 KV LINE FOR OBTAINING MECHANICAL BALANCE	00000-00	28	C.E (D.D)
29	ANTI CLIMBING DEVICE FOR 11 KV POLES & STRUCTURES	GW/DF - 48	29	SDI-46
30	33 KV SINGLE CROSS ARM ASSEMBLY FOR LATTICE STEEL POLE	PDW/DF - 171	30	SDI-57
31	33 KV DOUBLE CROSS ARM ASSEMBLY FOR LATTICE STEEL POLE	PDW/DF - 172	31	do
32	F33 KV DOUBLE CROSS ARM ASSEMBLY FOR CONCRETE POLE	PDW/DF - 172A	32	do
33	33 KV HORIZONTAL SINGLE DEAD END ASSEMBLY (WOOD CROSS ARM) FOR LATTICE STEEL POLE	PDW/DF - 175	33	do
34	33 KV HORIZONTAL SINGLE DEAD END ASSEMBLY (STEEL CROSS ARM) FOR LATTICE STEEL POLE	PDW/DF - 176	34	do
35	33 KV HORIZONTAL SINGLE DEAD END ASSEMBLY (STEEL CROSS ARM) FOR CONCRETE POLE	PDW/DF - 176-A	35	do
36	33 KV HORIZONTAL DOUBLE DEAD END ASSEMBLY (WOOD CROSS ARM)	PDW/DF - 177	36	do
37	33 KV HORIZONTAL DOUBLE DEAD END ASSEMBLY (STEEL CROSS ARM)	PDW/DF - 177A	37	do
38	33 KV TEE-OFF ASSEMBLY FOR LATTICE STEEL POLE	PDW/DF - 182	38	do
39	33 KV TEE-OFF ASSEMBLY FOR LATTICE STEEL POLE WITH STEEL CROSS ARMS	PDW/DF - 182A	39	do
40	25 OR 50 KVa DISTRIBUTION TRANSFORMER STATION ON SINGLE STRUCTURE (DTS-15)	PDW/DF - 253	40	do

41	25 OR 50 KVa DISTRIBUTION TRANSFORMER STATION SINGLE STRUCTURE (DTS-15) STEEL CROSS ARMS	PDW/DF - 253A	41	do
42	100 OR 200 KVa DISTRIBUTION TRANSFORMER STATION ON DOUBLE STRUCTURES (DTS-25)	PDW/DF - 254	42	do
43	25 OR 50 KVa DISTRIBUTION TRANSFORMER STATION ON SINGLE POLE (DTS-IP)	PDW/DF - 255	43	do
44	25 OR 50 KVa DISTRIBUTION TRANSFORMER STATION ON SINGLE POLE (DTS-IP) STEEL CROSS ARM	PDW/DF - 255A	44	do
45	100 OR 200 KV DISTRIBUTION TRANSFORMER STATION ON DOUBLE POLES (DTS-2P)	PDW/DF - 256	45	do
46	100 OR 200 KVa DISTRIBUTION TRANSFORMER STATION ON DOUBLE POLES (DTS-2P) STEEL CROSS ARMS	PDW/DF - 256	46	do
47	25 OR 50 KVa DISTRIBUTION TRANSFORMER STATION ON SINGLE STRUCTURES / P.C POLE (DTS-15)	CEDD/DDST/105	47	do
48	20 : 50 100 OR 200 KVa DISTRIBUTION TRANSFORMER STATION ON DOUBLE STRUCTURE / P.C POLE DT.5-25	CEDE/DDS1/106	48	do
49	300 KVAR CAPACITOR BANK ASSEMBLY 55L FOR LATTICE STEEL POLE	ES/DD - 55L	49	SDI-54
50	600 KVAR FIXED CAPACITOR BANK ASSEMBLY FOR LATTICE STEEL POLE	ES/DD - 56L	50	do
51	CAPACITOR RACK ASSEMBLY FOR CROSS ARM MOUNTING	DSW/DF - 32	51	do
52	DRILLING DETAIL FOR PART # CR 1 CAPACITOR RACK	DSW/DF - 33	52	do
53	CROSS ARM BRACE FOR PART # CR 2 CAPACITOR RACK	DSW/DF - 34	53	do
54	STEEL BRACE FOR PART NO. CR-3 (CAPACITOR RACK)	DSW/DF - 35	54	do
55	ANGULAR BRACE FOR PART # CR-4 CAPACITOR RACK	DSW/DF - 36	55	do
56	EARTH RODS CONFIGURATION FOR DISTRIBUTION TRANSFORMER STATION ON DOUBLE STRUCTURES	PDW/DF - 264	56	SDI-59
57	EARTH RODS CONFIGURATION FOR DISTRIBUTION TRANSFORMER STATION ON SINGLE STRUCTURES	PDW/DF - 263	57	do
58	EARTH RODS CONFIGURATION FOR DISTRIBUTION TRANSFORMER STATION ON SINGLE STRUCTURES	PDW/DF - 262	58	do
59	EARTHING ARRANGEMENT FOR L.T & H.T TUBULAR POLES	PDW/DF - 247	59	do
60	EARTH ARRANGEMENT FOR L.T & H.T LATTICE STEEL STRUCTURES	PDW/DF - 246	60	do
61	TYPE H 35 Ft. 600 LBS LATTICE STEEL STRUCTURES	PDW/DF - 11	61	P 34
62	TYPE L 31 FT. 300 LBS LATTICE STEEL STRUCTURE	PDW/DF - 10	62	do
63	L.T. CAPACITOR CONNECTION DIAGRAM	CE/DD - 2	63	T1-1
64	LT CAPACITOR INSTALLATION TRACK	CE/DD - 1	64	do

USAID FROM THE AMERICAN PEOPLE	USAID POWER DISTRIBUTION PROGRAM	Drawing No. Data Charts		
65	METER CONNECTION ARRANGEMENT 3 PHASE 3 WIRE 400 VOLTS	EW/DM - 14	65	T10-31
66	METER CONNECTION ARRANGEMENT : 3 PHASE 4 WIRE C.T. OPERATED TRIVECTOR METER	EW/DM - 13	66	do do
67	METER CONNECTION ARRANGEMENT: L & G 3 PHASE 3 WIRE C.TS. & P.T. OPERATED TRIVECTOR METER	EW/DM - 12	67	do
68	METER CONNECTION ARRANGEMENT: L & G 3 PHASE 3 WIRE C.T. & P.T. OPERATED METER WITH KWH kVAR & MDI (KW)	EW/DM - 11	68	do
69	METER CONNECTION ARRANGEMENT: AEG 3 PHASE 3 WIRE 230/400 VOLTS C.T. OPERATED METER WITH KWH KVARh &MDI (KW)	EW/DM - 10	69	do
70	METER CONNECTION ARRANGEMENT: 3 PHASE WIRE 3 400 VOLTS CHAMBERLAIN-HOOKHAM COMBINATION C.T. OPERATED METER	EW/DM - 9	70	do
71	METER CONNECTIONS ARRANGEMENT L&G 3 PHASE 3 WIRE 400 VOLTS C.T. OPERATED METER WITH KWH, KVARh AND MDI(KW)	EW/DM - 8	71	do
72	METER CONNECTION ARRANGEMENT : 3 PHASE 3 WIRE 400 VOLTS CHAMBERLAIN -HOOKHAM COMBINATION C.T. OPERATED METER WITH KWH, KVARh & DMI (KW)	EW/DM - 7	72	do
73	METER CONNECTION ARRANGEMENT: 3 PHASE 3 WIRE 400 VOLTS C.T. OPERATED METER WITH KWH, KVAH & MDI(KW)	EW/DM - 6	73	do
74	METER CONNECTION ARRANGEMENT: L&K, 3 PHASE 3 WIRE 230/400 V KWH C.T. OPERATED METER WITHOUT MDI	EW/DM - 5	74	do
75	CONNECTION FOR A THREE ELEMENT METER USED ON A 3 PHASE 4 WIRE SYSTEM	EW/DM - 4	75	do
76	METER CONNECTION ARRANGEMENT: 3 PHASE 3 WIRE 400 VOLTS DIRECT METER	EW/DM - 3	76	do
77	METER CONNECTIONS ARRANGEMENT AEG 3 PHASE 3 WIRE 400 VOLTS BALANCED LOAD METER	EW/DM - 2	77	do
78	METER CONNECTION ARRANGEMENT: SINGLE PHASE METER	EW/DM - 1	78	do
79	PIG TAIL TIE FOR ANGLE CONDUCTOR ON PIN INSULATOR	GW/DF - 12	79	SD1-1
80	PIG TAIL TIE FOR STRAIGHT LINE PIN INSULATOR	GW/DF - 11	80	do
81	INSULATION OF PVC JOINT BOX FOR TWIN CORE L.T. CABLE	DSW/DF - 60	81	DS1-3(d)
82	DETAIL SHOWING THE NOZZLING OF STAY WIRES ON TO AN ORDINARY THIMBLE	GW/DF - 1	82	SD1-1
83	PICTORIAL REPRESENTATION OF 3 PHASE PADMOUNTED TRANSFORMER	PDW/DF - 72	83	SD1-56

USAID FROM THE AMERICAN PEOPLE	USAID POWER DISTRIBUTION PROGRAM	Drawing No. Data Charts		
84	POWER SUPPLY SYSTEM	PDW/DF - 71	84	do
85	SINGLE PHASE SERVICE MAST	00000-00	85	SD1-55
86	THREE PHASE SERVICE MAST	00000-00	86	do
87	METER SECURITY BOX TYPE 'A'	CE DE/DDST - 233	87	do
88	CIRCUIT DIAGRAM	CE DE/DDST - 242	88	do
89	FOUNDATION FOR 40 & 45 FT STEEL STRUCTURE	CE DE/DDST/119	89	do
90	INSTALLATION OF TYPE 'B' METER BOX	PDW/DF - 260	90	do
91	INSTALLATION OF RECORD SLIP FOR SECURITY METER BOXES	PDW/DF 261	91	do
92	THE WIRE APPLICATION GUIDE FOR L.T. INSULATOR	EW/DF - 263	92	do
93	TIE WIRE APPLICATION GUIDE FOR TOP TIES ON 11 KV PIN INSULATOR	EW/DF - 264	93	do do
94	TIE WIRE APPLICATION GUIDE FOR SIDE TIES ON 11 KV PIN INSULATOR	EW/DF - 265	94	do
95	SINGLE PHASE CABLE SERVICE	PDW/DF - 290	95	tie-19
96	THREE PHASE CABLE SERVICE	PDW/DF - 289	96	sdi-41
97	THREE PHASE BARE CONDUCTOR SERVICE	PDW-DF - 288	97	do
98	THREE PHASE BARE CONDUCTOR SERVICE	PDW/DF - 287	98	do
99	CABLE SELECTION CHART	00000-00	99	do
100	UNIVERSAL SAG CHART FOR ALL ALUMINUM CONDUCTORS	00000-00	100	do
101	STANDARD MAPPING SYMBOLS FOR DISTRIBUTION	EW/DZ - 1	101	do
102	VOLTAGE CALCULATION PROCEDURE	00000-00	102	DWG/EW
103	HT VOLTAGE DROP CALCULATIONS	00000-00	103	do
104	PERCENT VOLTAGE INCREASE GOPHER CONDUCTOR	00000-00	104	-
105	PERCENT VOLTAGE INCREASE RABBIT CONDUCTOR	00000-00	105	-
106	PERCENT VOLTAGE INCREASE DOG CONDUCTOR	00000-00	106	-
107	11 KV ASSEMBLY FOR CONGESTED AREAS 5° TO 60°	C2-C	107	DZ-1
108	11 KV ASSEMBLY FOR CONGESTED AREAS 0° TO 5°	C1-C	108	EM-4
109	11 KV DEAD END UNITS FOR CONGESTED AREAS ON CONCRETE POLES	C7-C	109	- -
110	3Ø DEAD END CROSS ARMS WITH LOAD BREAK CUTOUT	C7-D	110	-
111	3Ø DEAD END CROSS ARMS WITH LOAD BREAK CUTOUT	C7-T	111	-
112	3Ø DEAD END ON CROSS ARMS	C7-D	112	-
113	SECONDARY UNITS FOR MULTIPLEX 0° TO 5°	J1-1, J1-2, J1-3	113	-
114	SECONDARY UNITS - COVERED NEUTRAL	J1-N1, J1-N2	114	-
115	SECONDARY UNITS FOR MULTIPLEX 5° TO 90°	J2-1, J2-2, J2-3	115	-
116	SECONDARY UNITS - COVERED NEUTRAL	J2-N1, J2-N2	116	-
117	SECONDARY UNITS - DEAD END	J9-1, J9-2	117	-
118	SECONDARY UNITS IN CONGESTED AREAS FOR STEEL LATTICE STRUCTURE	J21 J22	118	-

119	SECONDARY UNITS IN CONGESTED AREAS FOR STEEL OR CONCRETE POLES	J23 - J24	119	- -
120	SECONDARY UNITS IN CONGESTED AREAS ON MASONRY WALLS	J25 J26	120	- -
121	SECONDARY DEAD END UNITS FOR CONGESTED AREAS ON LATTICE POLES	J27	121	- -
122	SECONDARY DEAD END UNITS FOR CONGESTED AREA ON CONCRETE POLES	J28	122	- -
123	ABC CABLE SUSPENSION	J10-1,2,3&4	123	-
124	ABC CABLE SUSPENSION	K10-P1	124	-
125	SERVICE UNIT FOR POLE MOUNT 3Ø METER	K10-P3	125	-
126	SERVICE UNIT FOR WALL MOUNT 1Ø METER CONGESTED AREA	K10-W1C	126	- -
127	SERVICE UNIT FOR WALL MOUNT 1Ø METER CONGESTED AREA	K10-W2C	127	- -
128	SERVICE UNIT FOR WALL MOUNT 1Ø METER	K10-W1	128	-
129	SERVICE UNIT FOR WALL MOUNT 3Ø METER	K10-W2	129	-
130	SERVICE UNIT FOR WALL MOUNT 1Ø METER ON K13-3	K10-W3	130	-
131	SERVICE UNIT FOR WALL MOUNT 3Ø METER ON K13-3	K10-W4	131	-
132	SERVICE UNITS FOR MULTIPLE WALL MOUNT METER IN A CONGESTED AREA	K10-W3C	132	do
133	UNIVERSAL METER MOUNT (1 Frame)	K13-1	133	do
134	UNIVERSAL METER MOUNT	K13-2	134	
135	UNIVERSAL METER MOUNT(Wall)	K13-3	135	SD1-1
136	UNIVERSAL METER MOUNT(1 Frame)	K13-4	136	do
137	UNIVERSAL METER MOUNT	K13-5	137	DS1-3(d)
138	SERVICE UNITS FOR TAKE OFF ON POLE	K14-1,K14-2,K14-3	138	SD1-1
139	SERVICE UNIT FOR POLE 1Ø METER	K20-P1	139	
140	SERVICE UNIT FOR POLE MOUNT 3Ø METER	K20-P2	140	SD1-56
141	SERVICE UNIT FOR WALL MOUNT 1Ø METER	K20-W1	141	
142	SERVICE UNIT FOR WALL MOUNT 3Ø METER	K20-W2	142	do
143	SERVICE DROP POLE MOUNT	M5	143	SD1-55
144	GUIDE FOR MULTIPLE K10-P UNITS WITH A K14 UNITS	M7	144	do
145	SERVICE BRACKET RING AND SERVICE DEAD END GUIDE	M10	145	do
146	SERVICE DEAD END	M26	146	
147	SERVICE DEAD END FOR DUPLEX CABLE	M27	147	
148	THREE PHASE CSP TRANSFORMER MOUNTED IN CONGESTED AREA	M30	148	

149	SERVICE BRACKET RING FOR USE WITH OFFSET BRACKET	Pb1	149	-
150	FIXING OF STEEL STRIP ON LT/HT STEEL STRUCTURE	ITEM "SP"	150	-
	USING J-BOLTS			-
151	METER BASE MOUNTING BRACKETS	ITEM "SS" "SS1"	151	-
		& "SS2"		-
152	METER BASE MOUNTING BRACKETS	ITEM "SPM"	152	-
153	MEDIUM VOLTAGE SWITCHED CAPACITOR	C10-CAP	153	-
154	VOLTAGE REGULATOR SINGLE PHASE (200 Amps)	M7-1	154	-
155	VOLTAGE REGULATOR SINGLE PHASE (400 Amps)	M7-2	155	-
156	TABLE 1 PERCENT VOLTAGE DROP FOR 1,000 KVA FOR	-	156	-
	ONE MILE 11 KV, 50 CYCLES, 54" SPACING	-		-
157	TABLE 3 PERCENT VOLTAGE DROP FOR 1,000 KVA FOR	-	157	-
	ONE MILE 11 KV, 50 CYCLES, 54" SPACING	-		-
158	ALUMINUM AND ACSR	-	158	-
159	CHARACTERISTICS OF CONDUCTOR IN USE BY WAPDA (1)	-	159	-
160	4/0+ INDICATES S.W.G. WIRE IS LARGER THAN 4/0 A.W.G.	-	160	-
	ENGLISH STANDARD			-
161	INITIAL SAG TABLES	-	161	-
162	INITIAL SAG TABLES	-	162	-
163	FINAL SAG TABLES	-	163	
164	FINAL SAG TABLES	-	164	-
165	TABLE-1 SELECTION OF BOLTED CONNECTION	-	165	-
166	LINE AND SERVICE TAP (TEE OFF)	-	166	-
	COMPRESSION CONNECTOR			-
167	TABLE-III TYPE OF SLEEVES AND DIES FOR SLEEVE JOINTS	-	167	-
168	DIMENSION AND CHARACTERISTICS OF STANDARD	-	168	-
	LT PVC INSULATED ALUMINIUM CABLES			-
169	LOAD CARRYING OF STANDARDS CONDUCTOR IN KVA	-	169	-
	KILOMETERS FOR 11KV, AND KVAMETERS FOR L.T AT			-
	DIFFERENT POWER FACTORS AND PERCENT VOLTAGE DROPS			-
170	LOAD CARRYING CAPABILITY OF STANDARD CONDUCTOR	-	170	-
	IN KVA MILES FOR 11KV, AND KVA - YARDS FOR L.T AT			-
	DIFFERENT POWER FACTORS AND PERCENT VOLTAGE DROPS			-
171	MINIMUM CLEARANCES FOR OVERHEAD LINES	-	171	-
172	MINIMUM CLEARANCE FOR OVERHEAD LINES:-2	-	173	-
173	USEFUL INFORMATION (GENERAL)	-	174	-
174	CONVERSATION TABLE	-	175	-
	(BRITISH SYSTEM TO METRIC SYSTEM)			-

175 CONVERSATION TABLE - 176 -
(BRITISH SYSTEM TO METRIC SYSTEM 2)
176 CONVERSATION FACTORS (GENERAL) - 177 -
177 SIZE OF FUSE ELEMENTS COMPOSED OF PLAIN OR TINNED - 178 -
COPPER WIRE FOR USE IN SEMI-ENCLOSED FUSES
178 CALCULATION OF CAPACITOR SIZE (FOR LINE) - 179 -
179 INCH FRACTIONS (DECIMALS AND MILLIMETERS) - 180 -
180 LOADING OF DISTRIBUTION TRANSFORMERS - 181 -

USAID FROM THE AMERICAN PEOPLE	USAID POWER DISTRIBUTION PROGRAM	Drawing No. ES/DD - 1L

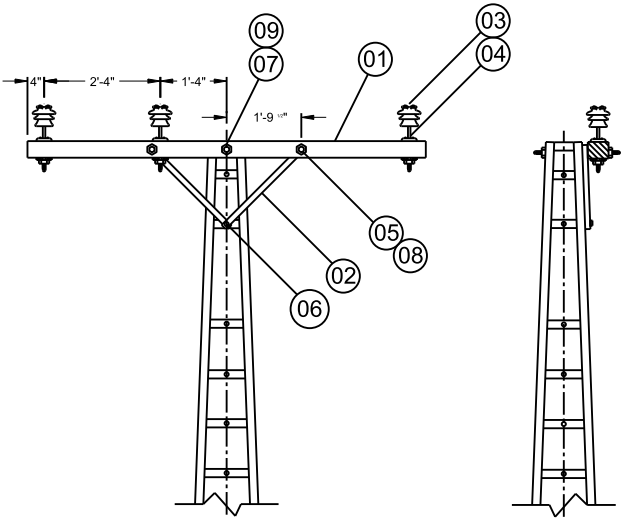

APPLICATION TABLE:

CONDUCTOR	LINE ANGLES
GOPHER	0 to 11°
RABBIT	0 to 08°
D O G	0 to 03°

NOTES:

USE AT TANGENT POSITIONS AND SMALL ANGLES. SPAN 440 TO 500 FT.

ITEM	QTY	DESCRIPTION	DRG. #	STOCK #
01	01	Wooden cross arm 4" x 5" x 8'-0"	EW/DF-251	T-1173
02	02	Cross arm braces $1\frac{1}{4}$" x $\frac{1}{4}$" x 28"	EW/DF-254	T-1352
03	03	11 kV Pin Type insulator	EW/DF-252	T-3211
04	03	Insulator pin	EW/DF-256	T-3217
05	02	MS. bolt $\frac{3}{8}$" x 6"	EW/DF-272	S-1265
06	01	MS. bolt $\frac{5}{8}$" x 2"	EW/DF-260	S-1297
07	01	MS. bolt $\frac{5}{8}$" x 14"	EW/DF-260	S-1303
08	02	Round washer 1" dia.$\frac{7}{16}$" hole	EW/DF-268	S-1791
09	01	Square washer $2\frac{1}{4}$"X$2\frac{1}{4}$"X$\frac{11}{16}$" hole	EW/DF-269	S-1792

11 K.V. SINGLE CROSS ARM ASSEMBLY 1-L

DIGITIZED BY:	ASAD ABBAS	REV

USAID FROM THE AMERICAN PEOPLE	USAID POWER DISTRIBUTION PROGRAM	Drawing No. ES/DD - 1AL

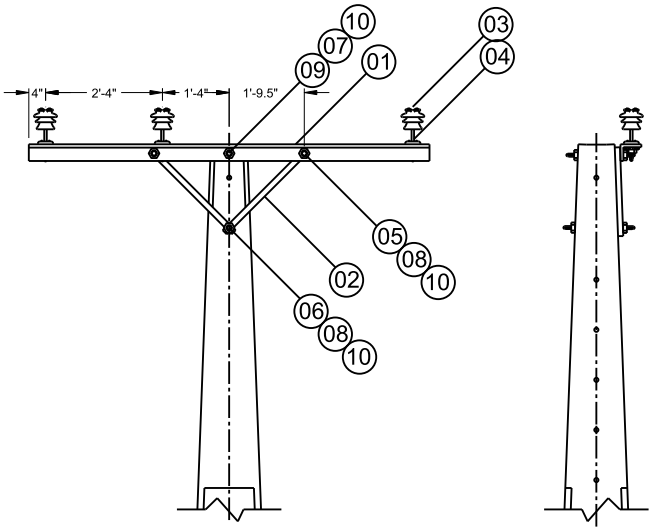

APPLICATION TABLE

CONDUCTOR	LINE ANGLES
GOPHER	0 to 11°
RABBIT	0 to 08°
D O G	0 to 03°

NOTES:

USE AT TANGENT POSITIONS AND SMALL ANGLES. SPAN 440 TO 500 FT.

ITEM	QTY	DESCRIPTION	DRG. #	STOCK #
01	01	Angle Iron cross arm 75 x 75 x 8 - Length 2440mm		
02	02	Cross arm braces 1280 x 50 x 8mm		
03	03	11 kV pin type insulator		
04	03	Insulator pin		
05	02	MS. M16x40mm (DIN 933) with Nut		
06	01	MS. M16x40mm (DIN 933) with Nut		
07	01	MS. M16x200mm with Nut and Washer		
08	04	Round washer Dia 16 mm- DIN 125		
09	01	Square washer Dia 16mm - DIN		
10	04	Lock Washer Dia 16mm		

11 K.V. SINGLE STEEL CROSSARM ASSEMBLY 1A-L

DIGITIZED BY:	ASAD ABBAS	REV

USAID FROM THE AMERICAN PEOPLE	USAID POWER DISTRIBUTION PROGRAM	Drawing No. ES/DD - 2L

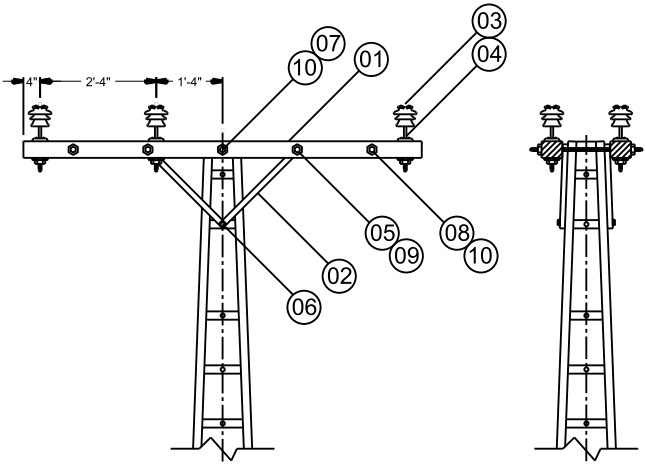

APPLICATION TABLE

CONDUCTOR	LINE ANGLES
GOPHER	0° to 25°
RABBIT	0° to 19°
D O G	0° to 80°

NOTES:

USE AT ANGLE POSITIONS AND ALL ROAD CROSSING.

ITEM	QTY:	DESCRIPTION	DWG. #	STOCK #
01	02	Wooden cross arm 4" x 5" x 8'-0"	EW/DF-251	T-1173
02	04	Cross arm brace 1 1/4" x 1/4" x 28"	EW/DF-254	T-1352
03	06	11 KV. pin type insulator	EW/DF-252	T-3211
04	06	Insulator pin	EW/DF-256	T-3217
05	04	MS. bolt 3/8" x 6"	EW/DF-272	S-1265
06	02	MS. bolt 5/8" x 2"	EW/DF-260	S-1297
07	01	MS. bolt 5/8" x 18"	EW/DF-280	S-1283
08	02	Double arming bolt 5/8"x 20"	EW/DF-270	S-1083
09	04	Round washer 1" dia. 7/16" hole	EW/DF-268	S-1791
10	10	Square washer 2 1/4"x2 1/4"x 11/16" hole	EW/DF-269	S-1792

11 K.V. DOUBLE CROSSARM ASSEMBLY 2-L FOR LATTICE STEEL POLE

DIGITIZED BY:	ASAD ABBAS	REV

USAID FROM THE AMERICAN PEOPLE	USAID POWER DISTRIBUTION PROGRAM	Drawing No. ES/DD - 2AL

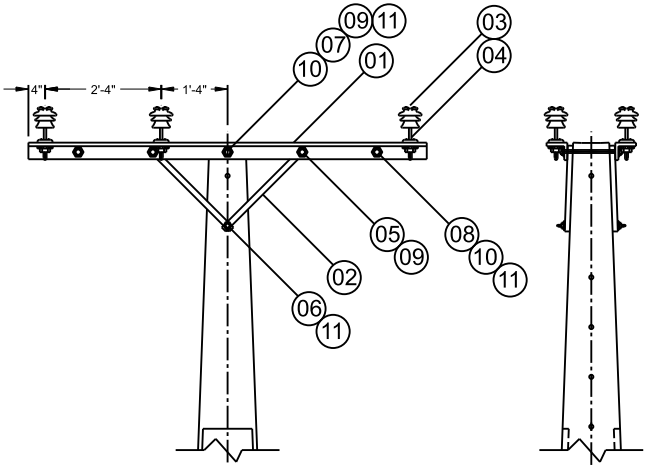

APPLICATION TABLE

CONDUCTOR	LINE ANGLES
GOPHER	0° to 25°
RABBIT	0° to 19°
D O G	0° to 80°

NOTES:

USE AT ANGLE POSITIONS AND ALL ROAD CROSSING.

ITEM	QTY	DESCRIPTION	DRG. #	STOCK #
01	02	Angle Iron cross arm 75 x 75 x 8 - Length 2440mm		
02	04	Cross arm braces 1280 x 50 x 8mm thick		
03	06	11 kV pin type insulator		
04	06	Insulator pin		
05	04	MS. M16x40mm (DIN 933) with Nut (DIN 555)		
06	04	MS. M16x40mm (DIN 933) with Nut (DIN 555)		
07	01	MS. M16x200mm with Nut and Washer		
08	02	Double arming bolt M16 x 460mm Long		
09	02	Round washer Dia 16mm - DIN 125		
10	02	Square washer Dia 16mm - DIN		
11	08	Lock washer Dia 16mm - DIN		

11 K.V. DOUBLE X-ARM (STEEL) ASSEMBLY 2A-L FOR LATTICE STEEL POLE

DIGITIZED BY:	ASAD ABBAS	REV

USAID FROM THE AMERICAN PEOPLE	USAID POWER DISTRIBUTION PROGRAM	Drawing No. ES/DD - 3L

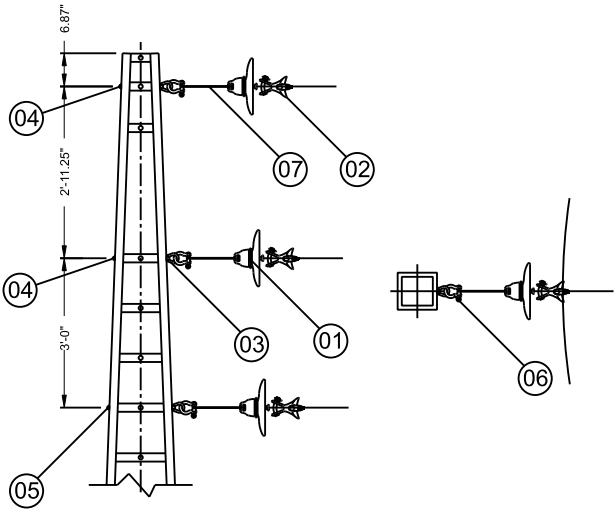

APPLICATION TABLE

CONDUCTOR	LINE ANGLES
GOPHER	USE ASSEMBLY 4-L
RABBIT	USE ASSEMBLY 4-L
D O G	6° to 12°

NOTES:

USE THIS ASSEMBLY AT MEDIUM ANGLE LOCATIONS FOR 11kV LINE WITHOUT LT, WITH DOG ACSR CONDUCTOR, ESPECIALLY WHERE CLEARANCE ON THE GUY SIDE IS REQUIRED. USE ONE GUY.

ITEM	QTY	DESCRIPTION	DRG. #	STOCK #
01	03	11 kV disc insulator 10" dia (Ø254mm)clevis type	EW/DF-257	T-3004
02	03	Suspension (angle) clamp.	EW/DF-253	T-5096
03	03	Eye- nut 3/8"(10mm)	EW/DF-036	S-1366
04	02	Double arming bolt 3/8" x 12" (10x305mm)	EW/DF-270	S-1080
05	01	Double arming bolt 3/8" x 14" (16x356mm)	EW/DF-270	S-1081
06	03	Anchor shackle	EW/DF-266	T-3167
07	03	Extention link : 14" (356mm)	EW/DF-267	T-3166

11 kV VERTICAL ANGLE ASSEMBLY 3L (WITH EXTENSION LINK) FOR LATTICE STEEL POLE

DIGITIZED BY:	ASAD ABBAS	REV

USAID FROM THE AMERICAN PEOPLE	USAID POWER DISTRIBUTION PROGRAM	Drawing No. ES/DD - 4L

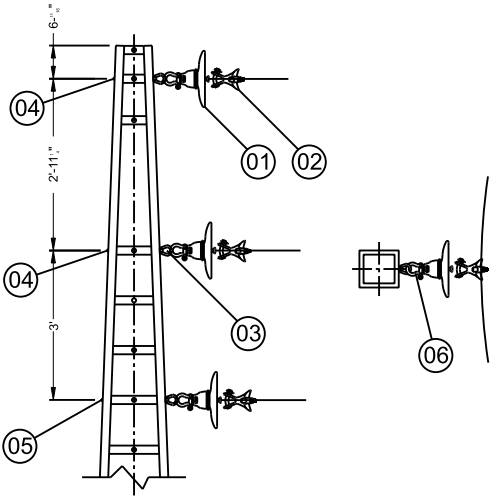

APPLICATION TABLE

CONDUCTOR	LINE ANGLES
GOPHER	20° to 60°
RABBIT	15° to 60°
D O G	12° to 60°

NOTES:

USE THIS ASSEMBLY AT HEAVY ANGLE LOCATIONS FOR 11kV LINE WITH ALL STANDARD ACSR CONDUCTORS. USE ONE GUY FOR GOPHER AND RABBIT CONDUCTORS. FOR DOG CONDUCTOR USE ONE GUY FOR LINE ANGLE UPTO 40 DEGREES AND TWO GUYS FOR GREATER ANGLES.

ITEM	QTY	DESCRIPTION	DRG. #	STOCK #
01	03	11 kV disc insulator 10" dia clevis type	EW/DF-257	T-3004
02	03	Suspension (angle) clamp.	EW/DF-253	T-5096
03	03	Eye- nut 3/8"	EW/DF-036	S-1366
04	02	Double arming bolt 3/8" x 12"	EW/DF-270	S-1080
05	01	Double arming bolt 3/8" x 14"	EW/DF-270	S-1081
06	03	Anchor shackle	EW/DF-266	T-3167

11 K.V. VERTICAL ANGLE ASSEMBLY 4L(WITHOUT EXTENSION LINK) FOR LATTICE STEEL POLE

DIGITIZED BY:	ASAD ABBAS	REV

USAID FROM THE AMERICAN PEOPLE	USAID POWER DISTRIBUTION PROGRAM	Drawing No. ES/DD - 5L

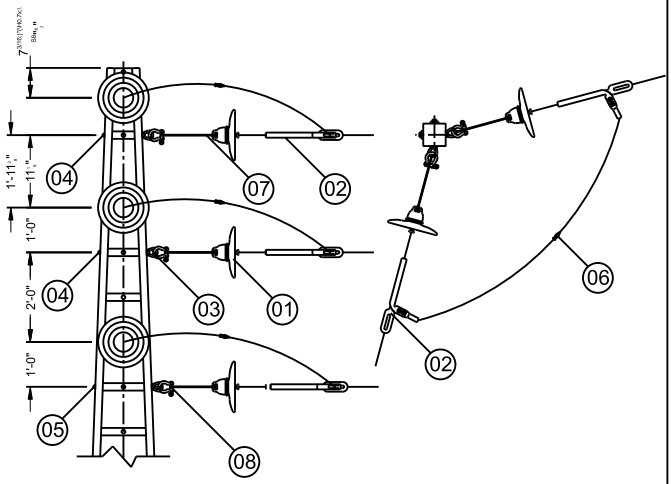

NOTES:

USE ON LINE ANGLES 60 TO 90 DEGREE.
USE ONE GUY FOR GOPHER AND RABBIT AGAINST EACH END.
FOR DOG USE TWO GUYS AGAINST EACH DEAD END

ITEM	QTY	DESCRIPTION	DRG. #	STOCK #
01	06	11 kV disc insulator 10"(Ø254mm)dia clevis type	EW/DF-257	T-3004
02	06	Deadend clamp.	EW/DF-253	T-5096
03	06	Eye- nut 16mm	EW/DF-036	S-1366
04	04	Double arming bolt 5/8" x 12"(10x305mm)	EW/DF-270	S-1080
05	02	Double arming bolt 5/8" x 14"(16x356mm)	EW/DF-270	S-1081
06	03	Compression sleeve connector	AS PER APPLICATION	
07	06	Extention link : 14"(356mm)	EW/DF-267	T-3166
08	06	Anchor shackle	EW/DF-266	T-3167

11 kV VERTICAL DEADEND ASSEMBLY 5L(WITHOUT EXTENSION LINK) FOR LATTICE STEEL POLE

DIGITIZED BY:	ASAD ABBAS	REV

USAID FROM THE AMERICAN PEOPLE	USAID POWER DISTRIBUTION PROGRAM	Drawing No. ES/DD - 7L

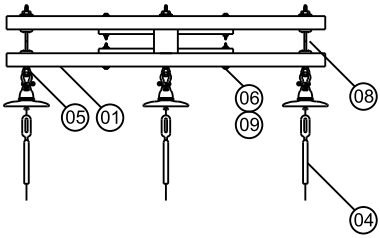

NOTES:

DEAD END ASSEMBLY FOR GOPHER AND RABBIT CONDUCTORS. THIS ASSEMBLY IS NOT TO BE USED WITH DOG CONDUCTOR. USE ONE GUY AGAINST THE DEAD END.

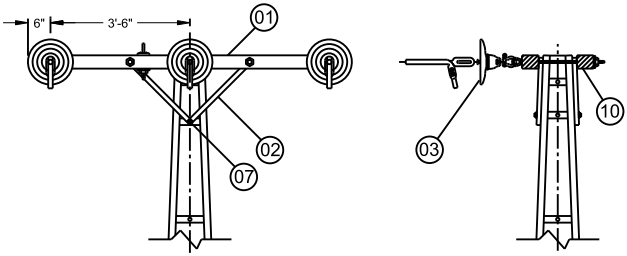

ITEM	QTY	DESCRIPTION	DRG. #	STOCK #
01	02	Wooden Cross-arm 4"x5"x8'-0"	EW/DF-251	T-1173
02	04	Cross-arm step braces $1\frac{1}{4}$"x$\frac{1}{4}$"x28"	EW/DF-254	T-1352
03	03	11 kV disc insulator 10" dia clevis type	EW/DF-257	T-3004
04	03	Deadend clamp.	EW/DF-259	T-5044
05	03	Eye- nut 5/8"	GW/DF-038	S-1366
06	04	MS. bolt 3/8" x 6"	EW/DF-272	S-1265
07	02	MS. bolt 5/8" x 2"	EW/DF-260	S-1297
08	03	Double arming bolt, 5/8" x 20"	EW/DF-270	S-1083
09	04	Round washer 1 " dia. 7/16" hole	EW/DF-268	S-1791
10	10	Sq. washer 2 1/4"x2 1/4"x11/16 " hole	EW/DF-269	S-1792

11 K.V. HORIZONTAL SINGLE DEADEND ASSEMBLY 7L (WOODEN CROSS ARM) FOR LATTICE STEEL POLE

DIGITIZED BY:	ASAD ABBAS	REV

USAID POWER DISTRIBUTION PROGRAM	Drawing No. ES/DD - 7AL

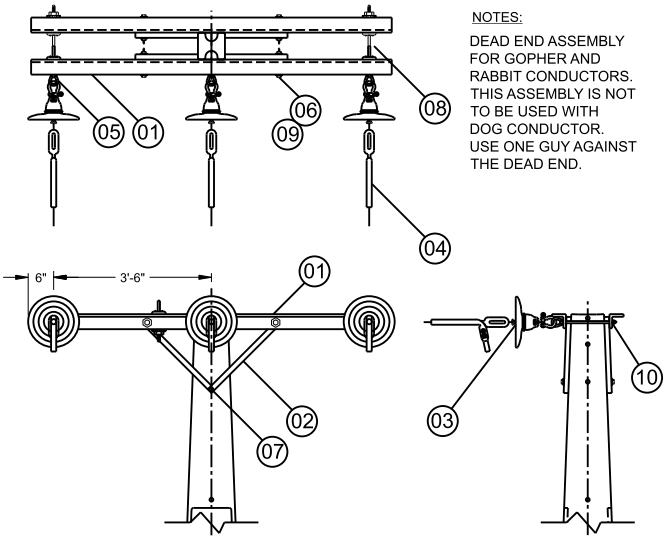

NOTES:

DEAD END ASSEMBLY FOR GOPHER AND RABBIT CONDUCTORS. THIS ASSEMBLY IS NOT TO BE USED WITH DOG CONDUCTOR. USE ONE GUY AGAINST THE DEAD END.

ITEM	QTY:	DESCRIPTION	STOCK #
01	02	Angle Iron cross arm 75 x 75 x 8 - Length 2440mm	
02	04	Cross arm braces 1280 x 50 x 8mm	
03	03	11 kV disc insulator 10" dia (Ø254)clevis type	
04	03	Deadend clamp.	
05	03	Eye- nut M16mm	
06	04	MS. bolt M10 x 152mm	
07	02	MS. bolt M16 x 50mm	
08	03	Double arming bolt, M10 x 500mm	
09	04	Round washer Dia 16mm - DIN 125	
10	10	Square washer Dia 16mm - DIN	

11 KV HORIZONTAL SINGLE DEADEND ASSEMBLY 7AL (ANGLE IRON X-ARM) FOR LATTICE STEEL POLE

DIGITIZED BY:	ASAD ABBAS	REV

USAID FROM THE AMERICAN PEOPLE	USAID POWER DISTRIBUTION PROGRAM	Drawing No. ES/DD - 8L

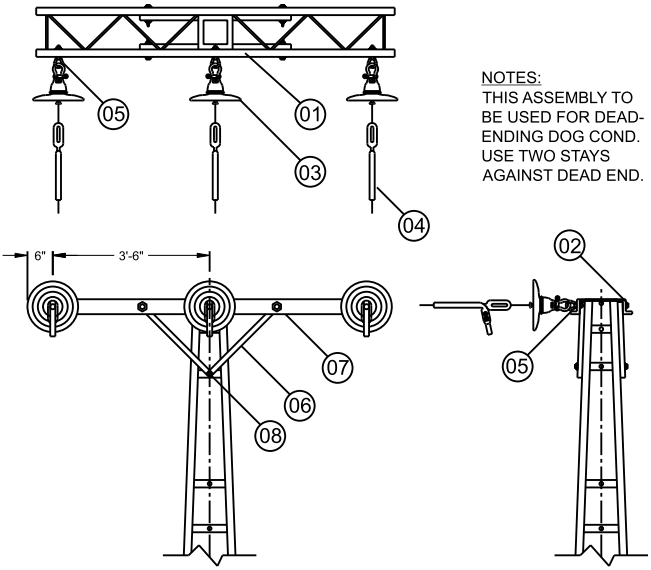

NOTES:
THIS ASSEMBLY TO BE USED FOR DEAD-ENDING DOG COND. USE TWO STAYS AGAINST DEAD END.

ITEM	QTY	DESCRIPTION	DRG. #	STOCK #
01	01	Lattice steel Cross-arm 75 x 75 x 8mm - Length 2440mm	EW/DF-154	- - - - - -
02	02	MS. Bolt 3/8" x 2" (10mmx50mm)	EW/DF-160	T-3000
03	03	11kV disc ins. Ø10"(Ø254mm)clevis Eye type	EW/DF-257	T-3004
04	03	Dead end clamp.	EW/DF-259	T-3044
05	03	Anchor shackle	EW/DF-266	T-1367
06	04	Cross arm braces 1 1/4" x 1/4" x 28"	EW/DF-254	T-1352
07	05	MS. Bolt 5/8" x 2"(16x50mm)	EW/DF-272	S-1264
08	02	MS. Bolt 5/8" x 2" (16x50mm)	EW/DF-260	S-1297

11 K.V. HORIZONTAL SINGLE DEADEND ASSEMBLY 8L(STEEL CROSS ARM) FOR LATTICE STEEL POLE

DIGITIZED BY:	ASAD ABBAS	REV

USAID FROM THE AMERICAN PEOPLE	USAID POWER DISTRIBUTION PROGRAM	Drawing No. ES/DD - 8AL

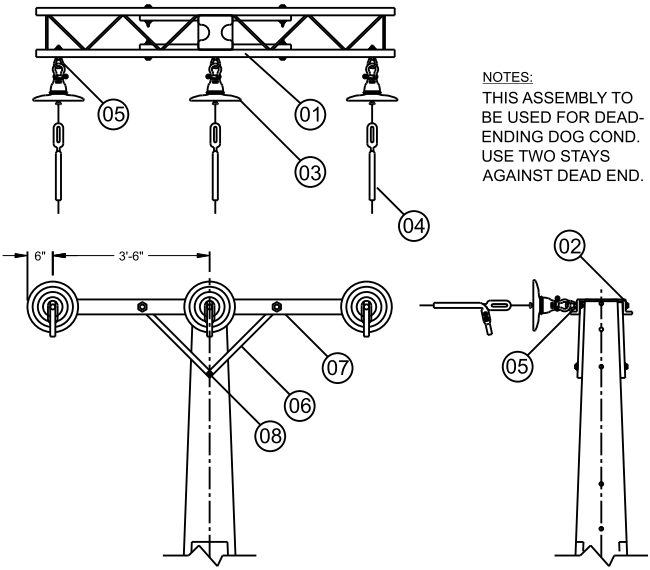

NOTES:
THIS ASSEMBLY TO BE USED FOR DEAD-ENDING DOG COND. USE TWO STAYS AGAINST DEAD END.

ITEM	QTY	DESCRIPTION	DRG. #	STOCK #
01	01	Lattice steel Cross-arm 75 x 75 x 8mm - Length 2440mm	EW/DF-154	- - - - - -
02	02	MS. Bolt 3/8" x 2" (10mmx50mm)	EW/DF-160	T-3000
03	03	11kV disc ins. Ø10" (Ø254mm)clevis Eye type	EW/DF-257	T-3004
04	03	Dead end clamp.	EW/DF-259	T-3044
05	03	Anchor shackle	EW/DF-266	T-1367
06	04	Cross arm braces 1 1/4" x 1/4" x 28"	EW/DF-254	T-1352
07	05	MS. Bolt 5/8" x 2" (16x50mm)	EW/DF-272	S-1264
08	02	MS. Bolt 5/8" x 2" (16x50mm)	EW/DF-260	S-1297

11 K.V. HORIZONTAL SINGLE DEADEND ASSEMBLY 8L(STEEL CROSS ARM) FOR PCC POLE

DIGITIZED BY:	ASAD ABBAS	REV

USAID FROM THE AMERICAN PEOPLE	USAID POWER DISTRIBUTION PROGRAM	Drawing No. ES/DD - 10L

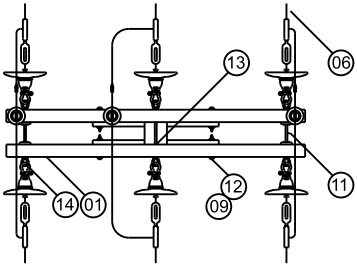

CA5 DI

NOTES:

OMIT ANCHOR SHACKLES FOR LINE ANGLES OF 5° OR LESS.
USE FOR FORMING DOUBLE DEAD ENDS ON A LONG LINE OR TAKING ANGLES. ALSO USE WHERE SECTIONALIZING SWITCHES ARE TO BE INSTALLED.

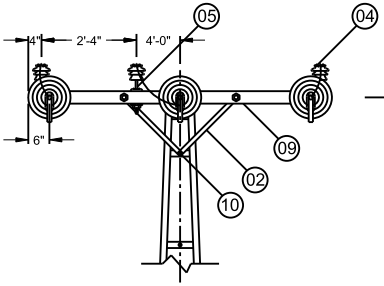

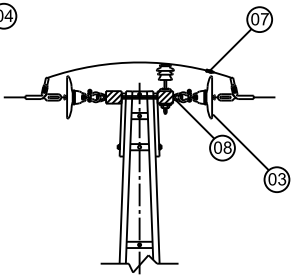

ITEM	QTY	DESCRIPTION	DRG. #	STOCK #
01	02	Wooden cross arm 4" x 5" x 8'-0" (102x127x2438mm)	EW/DF-251	T-1373
02	04	Cross arm step braces 1 1/4" x 1/4" x 28" (32x6x711mm)	EW/DF-254	T-1352
03	06	11 kV disc insulator 10" (254mm) dia clevis type	EW/DF-252	T-1031
04	03	11 kV pin type insulator	EW/DF-252	T-3217
05	03	Insulator pin	EW/DF-256	T-5884
06	06	Deadend clamp.	EW/DF-271	T-5004
07	03	P.G. type clamp two bolt type	EW/DF-036	T-5017
08	06	Eye- nut 5/8" (16mm)	GW/DF-236	S-1344
09	04	MS. bolt 3/8" x 6" (M10x152mm)	EW/DF-271	S-1145
10	02	MS. bolt 5/8" x 2" (M16x50mm)	EW/DF-260	S-1297
11	03	Double arming bolt, 5/8" x 20" (M16x406mm)	EW/DF-270	S-1083
12	04	Round washer 1 " dia.7/16" hole (Ø25x12mm)	EW/DF-268	S-1791
13	10	Square washer 2 1/4"X2 1/4" X 11/16" hole (64x64x16mm)	EW/DF-269	S-1792
14	06	Anchor shackle	EW/DF-266	T-3167

11 K.V. HORIZONTAL DOUBLE DEADEND ASSEMBLY 10L FOR LATTICE STEEL POLE

DIGITIZED BY:	ASAD ABBAS	REV

USAID POWER DISTRIBUTION PROGRAM	Drawing No. ES/DD - 10AL

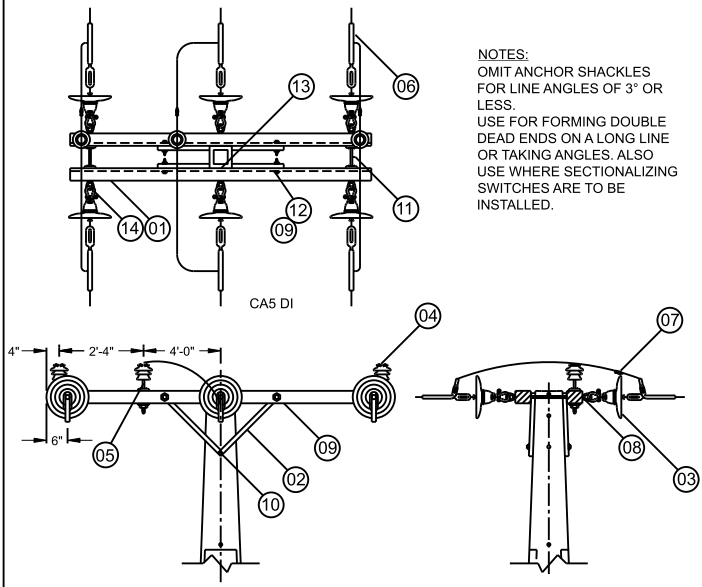

NOTES:
OMIT ANCHOR SHACKLES FOR LINE ANGLES OF 3° OR LESS.
USE FOR FORMING DOUBLE DEAD ENDS ON A LONG LINE OR TAKING ANGLES. ALSO USE WHERE SECTIONALIZING SWITCHES ARE TO BE INSTALLED.

ITEM	QTY	DESCRIPTION	DRG. #	STOCK #
01	02	Angle Iron cross arm 75 x 75 x 8mm - Length 2440mm		
02	04	Cross arm braces 1280 x 50 x 8mm		
03	06	11 kV disc insulator 10" (254mm)dia clevis type		
04	03	11 kV pin type insulator		
05	03	Insulator pin		
06	06	Deadend clamp.		
07	03	P.G. type clamp two bolt type		
08	06	Eye- nut M16		
09	04	MS. bolt M10 x 150mm		
10	02	MS. bolt M16 x 50mm		
11	03	Double arming bolt, M16 x 500mm		
12	04	Round washer Ø25mm-1mm hole		
13	10	Square washer 60x60x17mm hole		
14	06	Anchor shackle		

11 KV HORIZONTAL DOUBLE DEADEND ASSEMBLY 10L FOR LATTICE STEEL POLE

DIGITIZED BY:	ASAD ABBAS	REV

USAID FROM THE AMERICAN PEOPLE	USAID POWER DISTRIBUTION PROGRAM	Drawing No. ES/DD - 15L

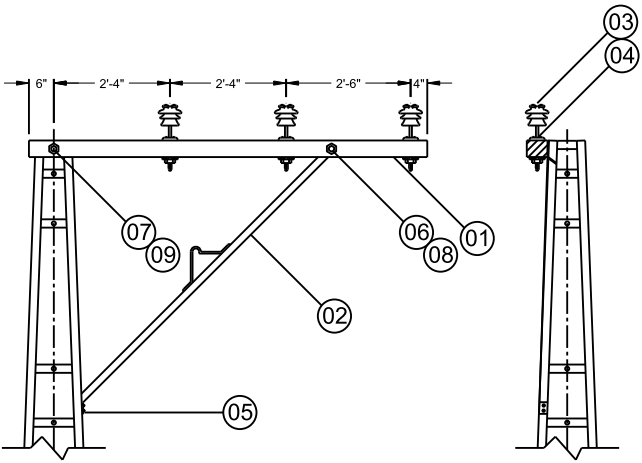

APPLICATION TABLE

CONDUCTOR	LINE ANGLES
GOPHER	0 to 10°
RABBIT	0 to 05°
D O G	0 to 03°

NOTES:

USE FOR RUNNING 11 kV LINES IN NARROW STREETS, WHERE HORIZONTAL CLEARANCE FROM BUILDING IS REQUIRED. SUITABLE FOR SLIGHT ANGLES

ITEM	QTY	DESCRIPTION	DRG. #	STOCK #
01	01	Wooden cross arm 4" x 5" x 8'-0"	EW/DF-251	T-1173
02	01	Cross arm step braces 1 3/4" x 3/16" x 7'	EW/DF-287	T-1358
03	03	11 kV pin type insulator	EW/DF-252	T-3211
04	03	Insulator pin	EW/DF-256	T-3217
05	02	MS. bolt 1/2" x 2"	EW/DF-286	S-1037
06	01	Ms. bolt 1/2" x 6"	EW/DF-286	S-1059
07	01	MS. bolt 5/8" x 14"	EW/DF-280	S-1285
08	01	Round washer 1 1/4" dia. 8/16" hole	EW/DF-268	S-1791
09	01	Square washer 2 1/4"X2 1/4" X 11/16" hole	EW/DF-269	S-1792

11 kV OFFSET SINGLE CROSS ARM ASSEMBLY 15-L
FOR LATTICE STEEL POLE

DIGITIZED BY:	ASAD ABBAS	REV

USAID FROM THE AMERICAN PEOPLE	USAID POWER DISTRIBUTION PROGRAM	Drawing No. ES/DD - 16L

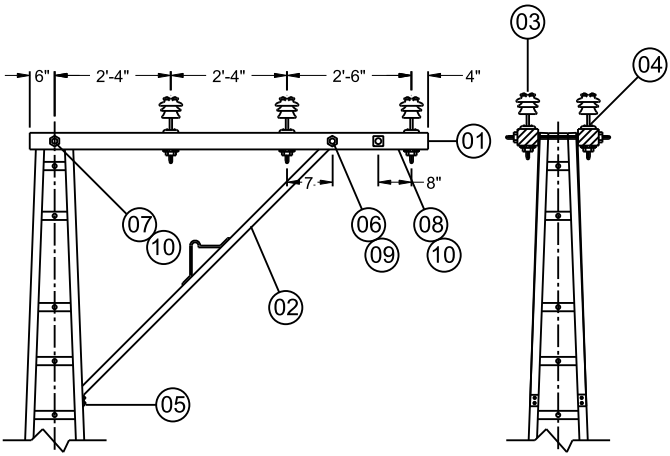

APPLICATION TABLE

CONDUCTOR	LINE ANGLES
GOPHER	0 to 10°
RABBIT	0 to 05°
D O G	0 to 03°

NOTE:

USE IN NARROW STREETS, WITH MEDIUM ANGLES OR ON ROAD CROSSING.

ITEM	QTY	DESCRIPTION	DRG. #	STOCK #
01	02	Wooden cross arm 4" x 5" x 8'-0"	EW/DF-251	T-1173
02	02	Cross arm step braces 1 3/4" x 3/16" x 7'	EW/DF-287	T-1358
03	06	11 kV pin type insulator	EW/DF-252	T-3211
04	06	Insulator pin	EW/DF-256	T-3217
05	04	MS. bolt 1/2" x 2"	EW/DF-286	S-1057
06	02	MS. bolt 1/2" x 6"	EW/DF-286	S-1059
07	01	MS. bolt 5/8" x 18"	EW/DF-280	S-1285
08	01	Double arming bolt, 5/8" x 20"	EW/DF-270	S-1083
09	02	Round washer 1 1/4" dia. 9/16" hole	EW/DF-268	S-1791
10	06	Sq. washer 2 1/4" X 2 1/4" X 11/16" hole	EW/DF-269	S-1792

11 K.V. OFFSET DOUBLE CROSS ARM ASSEMBLY 16-L
FOR LATTICE STEEL POLE

DIGITIZED BY:	ASAD ABBAS	REV

USAID FROM THE AMERICAN PEOPLE	USAID POWER DISTRIBUTION PROGRAM	Drawing No. ES/DD - 20L

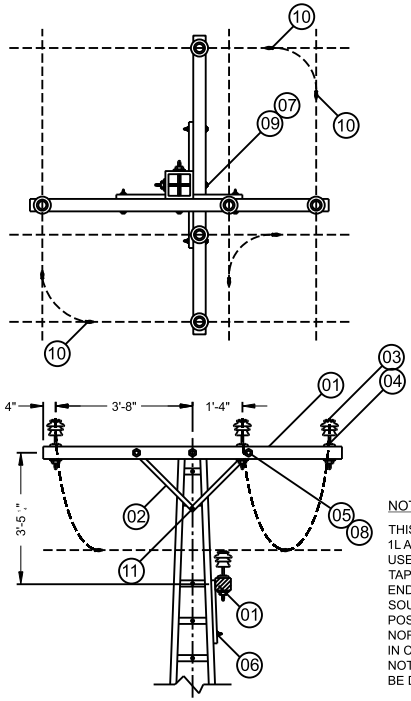

NOTES:

THIS ASSEMBLY IS COMBINATION OF 1L AND 21L.
USE FOR CROSSING OVER AND TAPPING 11kV LINES (NOT DEAD ENDING). LINE COMING FROM SOURCE AT TOP AND TAP AT LOWER POSITION.
NORMAL SPAN FOR TAP LINES BUT IN CASE OF TAP, ADJACENT SHOULD NOT EXCEED 250 ft. JUMPERING TO BE DONE AS SHOWN.

ITEM	QTY	DESCRIPTION	DRG. #	STOCK #
01	02	Wooden cross arm 4" x 5" x 8'-0"	EW/DF-251	T-1173
02	04	Cross arm braces 1 1/4" x 1/4" x 28"	EW/DF-254	T-352
03	06	11 kV pin type insulator	EW/DF-252	T-3211
04	06	Insulator pin	EW/DF-256	T-3217
05	04	MS. bolt 5/8" x 6"	EW/DF-272	S-1268
06	02	MS. bolt 5/8" x 2"	EW/DF-260	S-1297
07	02	MS. bolt 5/8" x 14"	EW/DF-260	S-1303
08	04	Round washer 1' dia. 7/16" hole	EW/DF-268	S-179
09	02	Square washer 2 1/4"X2 1/4"X 11/16" hole	EW/DF-269	S-1792
10	06	P.G. type clamp two bolt type	EW/DF-271	T-5013
11	01	MS. bolt 3/8" x 2"	EW/DF-260	S-1297

11 K.V. CROSSOVER AND TAP ASSEMBLY 20-L FOR LATTICE STEEL POLE

DIGITIZED BY:	ASAD ABBAS	REV

USAID FROM THE AMERICAN PEOPLE	USAID POWER DISTRIBUTION PROGRAM	Drawing No. ES/DD - 20AL

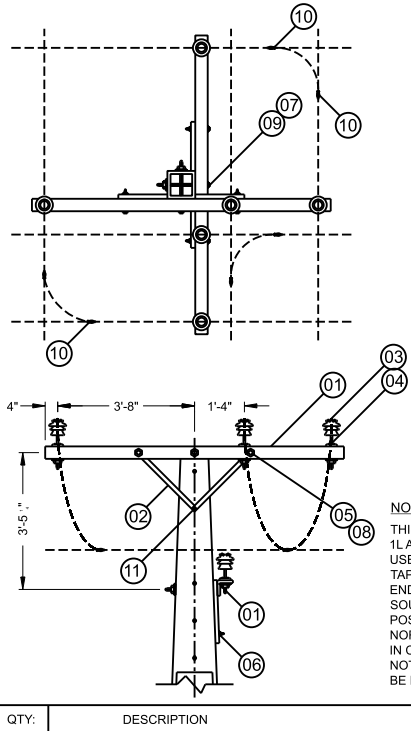

NOTES:

THIS ASSEMBLY IS COMBINATION OF 1L AND 21L.
USE FOR CROSSING OVER AND TAPPING 11kV LINES (NOT DEAD ENDING). LINE COMING FROM SOURCE AT TOP AND TAP AT LOWER POSITION.
NORMAL SPAN FOR TAP LINES BUT IN CASE OF TAP, ADJACENT SHOULD NOT EXCEED 250 ft. JUMPERING TO BE DONE AS SHOWN.

ITEM	QTY:	DESCRIPTION	DRG. #	STOCK #
01	02	Angle Iron cross arm 75 x 75 x 8 - Length 2440		
02	04	Cross arm braces 1280 x 50 x 8		
03	06	11 kV pin type insulator		
04	06	Insulator pin		
05	04	MS. bolt M16 x 150mm		
06	02	MS. bolt M16 x 50mm		
07	02	MS. bolt M16 x 360mm		
08	04	Round washer Dia 16 - DIN 125		
09	02	quare washer Dia 16 - DIN		
10	06	P.G. type clamp two bolt type		
11	01	MS. M10 x 50		

11 kV CROSSOVER AND TAP ASSEMBLY 20-L (STEEL X-ARM)

DIGITIZED BY:	ASAD ABBAS	REV

USAID FROM THE AMERICAN PEOPLE	USAID POWER DISTRIBUTION PROGRAM	Drawing No. ES/DD - 21L

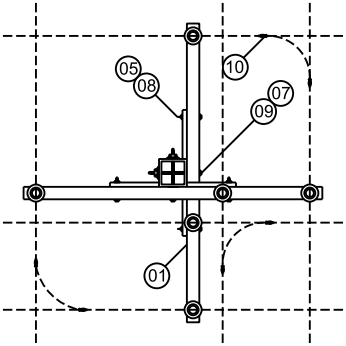

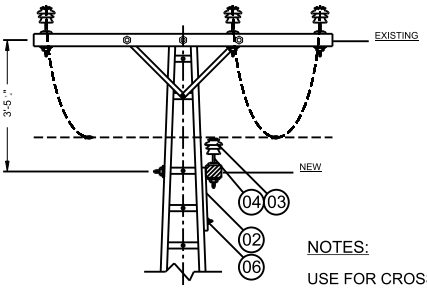

NOTES:

USE FOR CROSSING OVER AND TAPPING. TOP LINE ALREADY EXISTS.

ITEM	QTY:	DESCRIPTION	DRG. #	STOCK #
01	01	Wooden cross arm 4" x 3" x 8'-0"	EW/DF-251	T-1173
02	02	Cross arm braces 1 1/4" x 1/4" x 28"	EW/DF-254	T-1352
03	03	11 kV pin type insulator	EW/DF-252	T-3211
04	03	Insulator pin	EW/DF-255	T-1217
05	02	MS. bolt 5/8" x 6"	EW/DF-272	S-1265
06	02	MS. bolt 5/8" x 2"	EW/DF-260	S-1297
07	01	MS. bolt 5/8" x 14"	EW/DF-260	S-1303
08	02	Round washer 1' dia. 7/16" hole	EW/DF-268	S-1791
09	01	Square washer 2 1/4" x 2 1/4" x 11/16" hole	EW/DF-269	S-1792
10	06	P.G. type clamp two bolt type	EW/DF-271	T-5017

11 kV CROSS OVER AND TAP ASSEMBLY 21L (FOR EXISTING LINE)

DIGITIZED BY:	ASAD ABBAS	REV

USAID FROM THE AMERICAN PEOPLE	USAID POWER DISTRIBUTION PROGRAM	Drawing No. ES/DD - 21AL

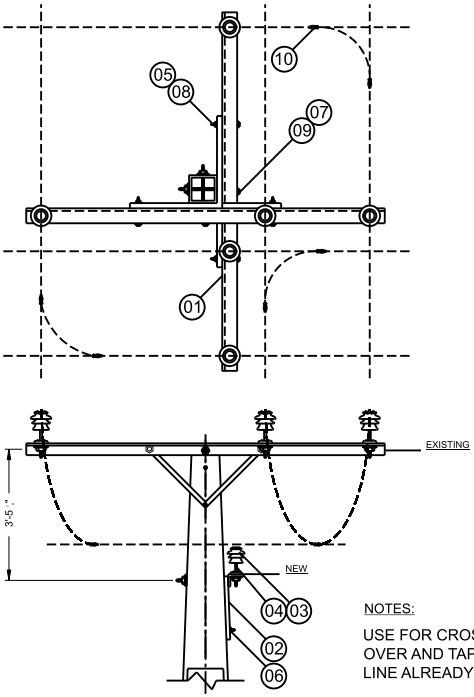

NOTES:

USE FOR CROSSING OVER AND TAPPING. TOP LINE ALREADY EXISTS.

ITEM	QTY	DESCRIPTION	DRG. #	STOCK #
01	01	Wooden cross arm 4" x 3" x 8'-0"		
02	02	Cross arm braces 1 1/4" x 1/4" x 28"		
03	03	11 kV pin type insulator		
04	03	Insulator pin		
05	02	MS. bolt 5/8" x 6"		
06	02	MS. bolt 5/8" x 2"		
07	01	MS. bolt 5/8" x 14"		
08	02	Round washer 1' dia. 7/16" hole		
09	01	Square washer 2 1/4" x 2 1/4" x 11/16" hole		
10	06	P.G. type clamp two bolt type		

11 kV CROSS OVER AND TAP ASSEMBLY 21L - STEEL X-ARM (FOR EXISTING LINE)

DIGITIZED BY:	ASAD ABBAS	REV

USAID FROM THE AMERICAN PEOPLE	USAID POWER DISTRIBUTION PROGRAM	Drawing No. ES/DD - 22L

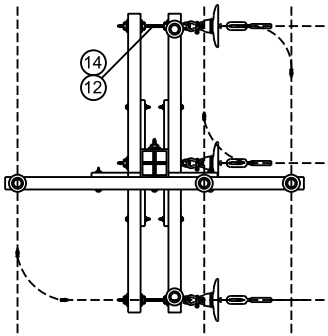

NOTES:

OMIT ANCHOR SHACKLES FOR TEE TAKE-OFF ANGLES OF 5 DEGREE OR LESS.
TEE OFF ASSEMBLY FOR GOPHER AND RABBIT CONDUCTORS ONLY.
USE THIS ASSEMBLY WHEN APART FROM A STRAIGHT RUN, A TEE-OFF OF THE 11 kV IS DESIRED.
CENTRAL PIN INSULATOR SHOULD BE ON THE SAME SIDE OF THE CROSSARMS AS THE TEE-OFF.
INSTALL DEAD END CLAMPS IN SUCH A MANNER THAT THE CONDUCTOR TAILS COME OUT IN AN UPWARD DIRECTION.
USE THESE TAILS FOR JUMPERING AS INDICATED IN THE DRAWING.

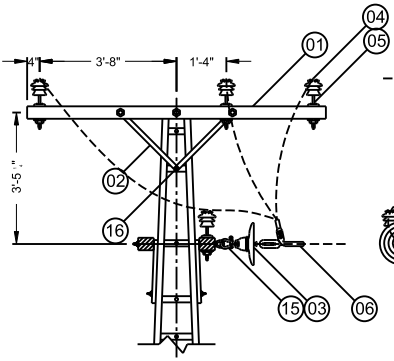

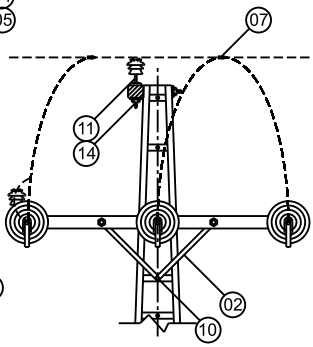

ITEM	QTY	DESCRIPTION	STOCK #	ITEM	QTY	DESCRIPTION	STOCK #
01	02	Wooden cross arm 4" x 5" x 8'-0"	T-1173	09	06	MS. bolt $\frac{5}{8}$" x 6"	S-1285
02	06	Crossarm step braces 11/4" x 1/4" x 28"	T-1352	10	04	MS. bolt $\frac{1}{2}$" x 2"	S-0737
03	03	11 kV disc insulator 10" dia clevis type	T-3004	11	01	MS. bolt $\frac{5}{8}$" x 14"	S-1303
04	04	11 kV pin type insulator	T-3211	12	03	Double arming bolt, $\frac{5}{8}$" x 20"	S-1083
05	04	Insulator pin	T-3217	13	06	Round washer 1 " dia.$\frac{7}{16}$" hole	S-1791
06	03	Deadend clamp.	T-5004	14	11	Square washer $2\frac{1}{4}$"X$2\frac{1}{4}$"X$\frac{11}{16}$" hole	S-1792
07	03	P.G. type clamp two bolt type	T-5017	15	03	Anchor shackle	T-3167
08	03	Eye- nut 5/8"	T-1366	16	01	MS. bolt	

11 KV TEE-OFF ASSEMBLY 22L

DIGITIZED BY:	ASAD ABBAS	REV

USAID FROM THE AMERICAN PEOPLE	USAID POWER DISTRIBUTION PROGRAM	Drawing No. ES/DD-22AL

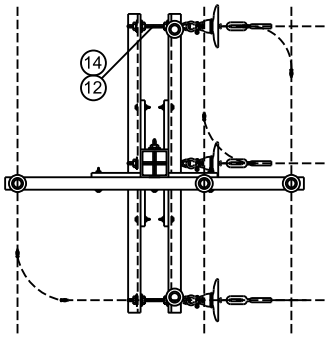

NOTES:

OMIT ANCHOR SHACKLES FOR TEE TAKE-OFF ANGLES OF 5 DEGREE OR LESS.
TEE OFF ASSEMBLY FOR GOPHER AND RABBIT CONDUCTORS ONLY.
USE THIS ASSEMBLY WHEN APART FROM A STRAIGHT RUN, A TEE-OFF OF THE 11 kV IS DESIRED.
CENTRAL PIN INSULATOR SHOULD BE ON THE SAME SIDE OF THE CROSSARMS AS THE TEE-OFF.
INSTALL DEAD END END CLAMPS IN SUCH A MANNER THAT THE CONDUCTOR TAILS COME OUT IN AN UPWARD DIRECTION.
USE THESE TAILS FOR JUMPERING AS INDICATED IN THE DRAWING.

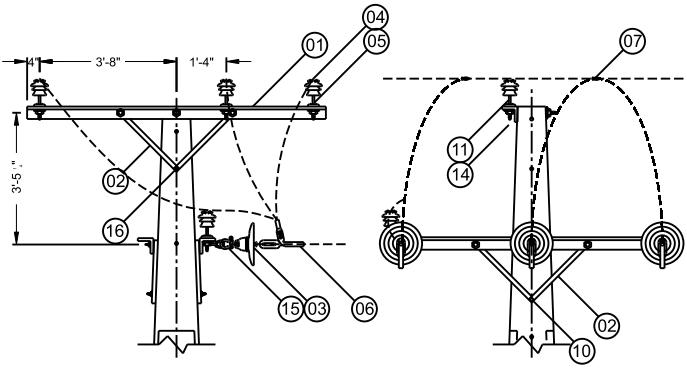

ITEM	QTY	DESCRIPTION	ITEM	QTY	DESCRIPTION
01	02	Angle Iron cross arm 75 x 75 x 8 - Length 2440	09	06	MS. bolt M16 x 150mm
02	06	Cross arm braces 1280 x 50 x 8	10	04	MS. bolt 12 x 50mm
03	03	11 kV disc insulator 10" dia clevis type	11	01	MS. bolt 16 x 360mm
04	04	11 kV pin type insulator	12	03	Double arming bolt, M16 x 500
05	04	Insulator pin	13	16	Round washer 25 dia.12mm hole
06	03	Deadend clamp.	14	11	Square washer Dia 16 - DIN
07	03	P.G. type clamp two bolt type	15	03	Anchor shackle
08	03	Eye- nut 16 Ø	16	01	MS. bolt

11 KV TEE-OFF ASSEMBLY 22L (STEEL X-ARM)

DIGITIZED BY:	ASAD ABBAS	REV

USAID FROM THE AMERICAN PEOPLE	USAID POWER DISTRIBUTION PROGRAM	Drawing No. ES/DD - 23L

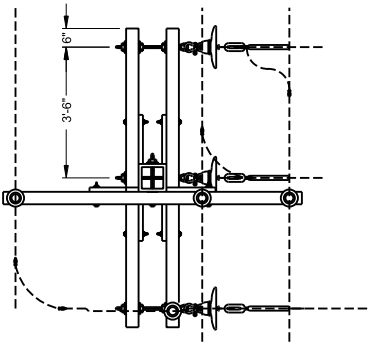

NOTES:

OMIT ANCHOR SHACKLES FOR TEE TAKE-OFF ANGLES OF 5 DEGREE OR LESS.
TEE-OFF ASSEMBLY FOR GOFHER AND RABBIT CONDUCTORS ONLY.
THIS ASSEMBLY IS SIMILAR TO 22L EXCEPT THAT THE TOP ASSEMBLY ALREADY EXISTS.

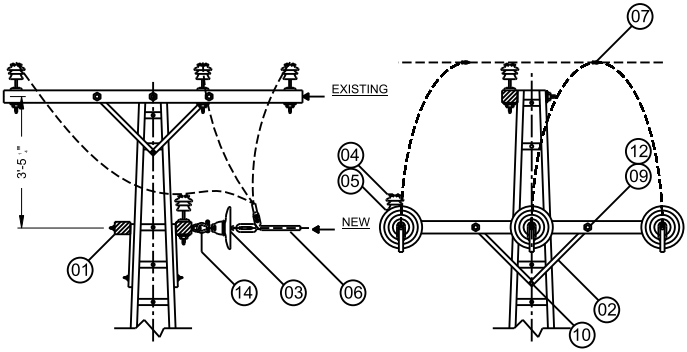

ITEM	QTY	DESCRIPTION	STOCK #	ITEM	QTY	DESCRIPTION	STOCK #
01	02	Wooden cross arm 4" x 5" x 8'-0"	T-1173	08	03	Double arming bolt 5/8" x 20"	S-1083
02	04	Cross arm braces 11/4" x 1/4" x 28"	T-1352	09	04	Round washer 1 " dia.7/16" hole	T-1791
03	03	11 kV disc insulator 10" dia clevis type	T-3004	10	10	Square washer 21/4"x21/4" hole	S-1792
04	03	Deadend clamp.	T-5004	11	03	Anchor shackle	T-3107
05	03	Eye- nut 5/8"	T-1366	12	03	PG clamp, two bolt type	T-5017
06	04	MS. bolt 3/8"X6"	S-1265	13	04	Insulator pin	T-3217
07	02	MS. bolt 5/8" x 2"	T-1057	14	04	11 kV pin type insulator	T-3211

11 kV TEE-OFF ASSEMBLY 23L (FOR EXISTING LINE)

DIGITIZED BY:	ASAD ABBAS	REV

USAID FROM THE AMERICAN PEOPLE	USAID POWER DISTRIBUTION PROGRAM	Drawing No. ES/DD - 40L

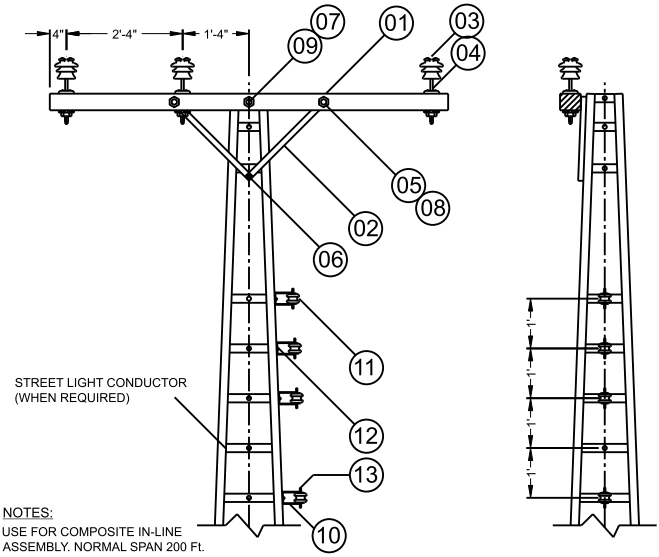

NOTES:

USE FOR COMPOSITE IN-LINE ASSEMBLY. NORMAL SPAN 200 Ft.
ITEM 13 MENT FOR NEUTRAL WIRE.

ITEM	QTY	DESCRIPTION	DRG. #	STOCK #
01	01	Wooden cross arm 4" x 5" x 8'-0"	EW/DF-251	T-1173
02	02	Cross arm braces 1 1/4" x 1/4" x 28"	EW/DF-254	T-1352
03	03	11 kV pin type insulator	EW/DF-252	T-3211
04	03	Insulator pin	EW/DF-256	T-3217
05	02	MS. bolt 3/8" x 6"	EW/DF-272	S-1265
06	01	Ms. bolt 5/8" x 2"	EW/DF-260	S-1297
07	01	MS. bolt 5/8" x 14"	EW/DF-280	S-1303
08	02	Round washer 1" dia. 7/16" hole	EW/DF-268	S-1791
09	01	Square washer 2 1/4"x2 1/4"x1/8" hole	EW/DF-269	S-1792
10	04	D-shackle	GW/DF-013	T-3265
11	04	Spool insulator	GW/DF-030	T-3267
12	04	MS. bolt, 5/8" x 1 1/2".	EW/DF-260	T-1296
13	04	Mild steel pin, conter pin	GW/DF-34	T-3266

11K.V. & 400 VOLT COMPOSITE IN LINE ASSEMBLY 40L

DIGITIZED BY:	ASAD ABBAS	REV

USAID FROM THE AMERICAN PEOPLE	USAID POWER DISTRIBUTION PROGRAM	Drawing No. ES/DD - 41L

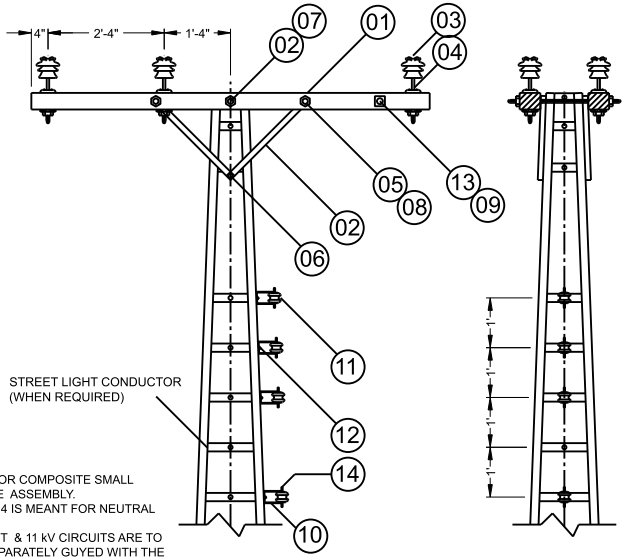

NOTE:

USE FOR COMPOSITE SMALL ANGLE ASSEMBLY.
ITEM 14 IS MEANT FOR NEUTRAL WIRE.
THE L.T & 11 kV CIRCUITS ARE TO BE SEPARATELY GUYED WITH THE GUY DIRECTLY BEHIND THE L.T & 11kV CIRCUITS RESPECTIVELY.

ITEM	QTY	DESCRIPTION	DRG. #	STOCK #
01	02	Wooden cross arm 4" x 5" x 8'-0"	EW/DF-251	T-1173
02	04	Cross arm braces 1 1/4" x 1/4" x 28"	EW/DF-254	T-1352
03	06	11 kV pin type insulator	EW/DF-252	T-3211
04	06	Insulator pin	EW/DF-256	T-3217
05	04	MS. bolt 3/8" x 6"	EW/DF-272	S-1265
06	02	MS. bolt 5/8" x 2"	EW/DF-260	S-1297
07	01	MS. bolt 5/8" x 18"	EW/DF-260	S-1305
08	04	Round washer 1" dia. 7/16" hole	EW/DF-268	S-1791
09	10	Square washer 2 1/4" x 2 1/4" x 11/16" hole	EW/DF-269	S-1792
10	04	D-shackle	GW/DF-013	T-3265
11	04	Spool insulator	GW/DF-030	T-3267
12	04	MS. bolt, 5/8" x 11/2".	EW/DF-260	T-1296
13	02	Double arming bolt 3/8" x 20"	EW/DF-270	S-1083
14	04	Mild steel pin, conter pin	GW/DF-135	T-3266

11K.V. & 400 VOLT COMPOSITE SMALL ANGLE ASSEMBLY 41L

DIGITIZED BY:	ASAD ABBAS	REV

USAID FROM THE AMERICAN PEOPLE	USAID POWER DISTRIBUTION PROGRAM	Drawing No. ES/DD - 41AL

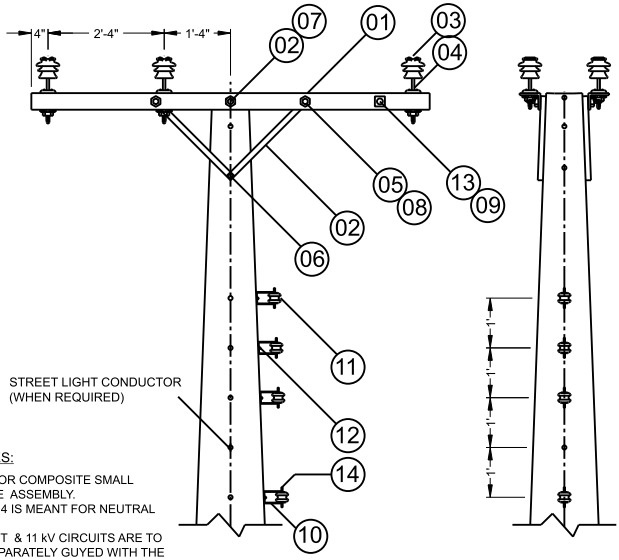

NOTES:

USE FOR COMPOSITE SMALL ANGLE ASSEMBLY.
ITEM 14 IS MEANT FOR NEUTRAL WIRE.
THE L.T & 11 kV CIRCUITS ARE TO BE SEPARATELY GUYED WITH THE GUY DIRECTLY BEHIND THE L.T & 11kV CIRCUITS RESPECTIVELY.

ITEM	QTY	DESCRIPTION	DRG. #	STOCK #
01	02	Steel cross arm 4" x 5" x 8'-0"	EW/DF-251	T-1173
02	04	Cross arm braces 1 1/4" x 1/4" x 28"	EW/DF-254	T-1352
03	06	11 kV pin type insulator	EW/DF-252	T-3211
04	06	Insulator pin	EW/DF-256	T-3217
05	04	MS. bolt 3/8" x 6"	EW/DF-272	S-1265
06	02	MS. bolt 5/8" x 2"	EW/DF-260	S-1297
07	01	MS. bolt 5/8" x 18"	EW/DF-260	S-1305
08	04	Round washer 1" dia. 7/16" hole	EW/DF-268	S-1791
09	10	Square washer 2 1/4" x 2 1/4" x 11/16" hole	EW/DF-269	S-1792
10	04	D-shackle	GW/DF-013	T-3265
11	04	Spool insulator	GW/DF-030	T-3267
12	04	MS. bolt, 5/8" x 11/2".	EW/DF-260	T-1296
13	02	Double arming bolt 3/8" x 20"	EW/DF-270	S-1083
14	04	Mild steel pin, conter pin	GW/DF-135	T-3266

11K.V. & 400 VOLT COMPOSITE SMALL ANGLE ASSEMBLY 41AL

DIGITIZED BY:	ASAD ABBAS	REV

USAID FROM THE AMERICAN PEOPLE	USAID POWER DISTRIBUTION PROGRAM	Drawing No. ES/DD - 42L

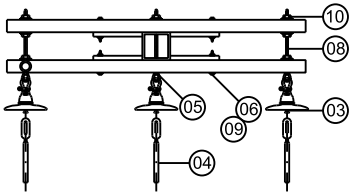

NOTES:

USE FOR COMPOSITE DEAD END ASSEMBLY. THE LT AND 11 kV CIRCUITS ARE TO BE GUYED WITH THE GUY DIRECTLY BEHIND THE LT AND 11 kV CIRCUITS RESPECTIVELY.

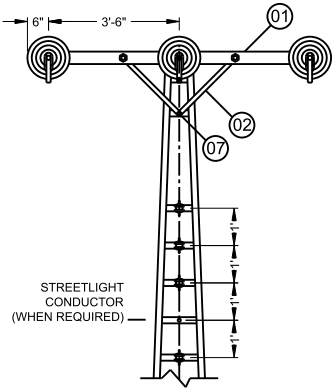

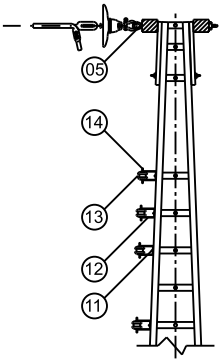

ITEM	QTY	DESCRIPTION	DRG. #	STOCK #
01	02	Wooden cross arm 4" x 5" x 8'-0"	EW/DF-251	T-1173
02	04	Cross arm braces 1 1/4" x 1/4" x 28"	EW/DF-254	T-1352
03	03	11 K.V. disc insulator 10" dia clevis type	EW/DF-257	T-3004
04	03	Deadend clamp.	EW/DF-259	T-5004
05	03	Eye- nut 5/8"	GW/DF-036	T-1366
06	04	MS. bolt 3/8"	EW/DF-272	S-1265
07	02	MS. bolt 5/8" x 2	EW/DF-260	S-1297
08	03	Double arming bolt 5/8" x 20"	EW/DF-270	S-1083
09	04	Round washer 1 " dia. 7/16" hole	EW/DF-268	S-1791
10	10	Square washer 2 1/4" x 2 1/4" hole	EW/DF-269	S-1792
11	04	MS. bolt 5/8" x 1 1/2"	EW/DF-260	S-1296
12	04	D shackle	EW/DF-013	T-2265
13	04	Spool insulator	EW/DF-030	T-3267
14	04	Mild steel pin / conter pin	EW/DF-3425	T-3266

11 kV AND 400 VOLT COMPOSITE DEAD END ASSEMBLY

DIGITIZED BY:	ASAD ABBAS	REV

USAID FROM THE AMERICAN PEOPLE	USAID POWER DISTRIBUTION PROGRAM	Drawing No. ES/DD - 42AL

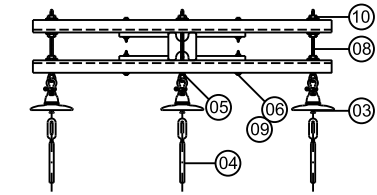

NOTES:

USE FOR COMPOSITE DEAD END ASSEMBLY. THE LT AND 11 kV CIRCUITS ARE TO BE GUYED WITH THE GUY DIRECTLY BEHIND THE LT AND 11 kV CIRCUITS RESPECTIVELY.

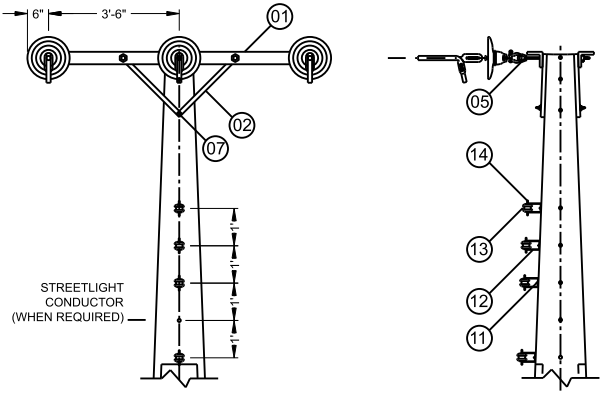

ITEM	QTY	DESCRIPTION	DRG. #	STOCK #
01	02	Angle Iron cross arm 75 x 75 x 8 - Length 2440		
02	04	Cross arm braces 30 x 6 x 1280		
03	03	11 K.V. disc insulator 10" dia clevis type		
04	03	Deadend clamp.		
05	03	Eye- nut 16Ø		
06	04	MS. bolt M10		
07	02	MS. bolt M16 x 50mm		
08	03	Double arming bolt M16 x 508mm		
09	04	Round washer 25 dia.11 hole		
10	10	Square washer 2 1/4" x 2 1/4" hole		
11	04	MS. bolt m16 x 75mm		
12	04	D shackle		
13	04	Spool insulator		
14	04	Mild steel pin / conter pin		

11 kV AND 400 VOLT COMPOSITE DEAD END ASSEMBLY (STEEL X-ARM)

DIGITIZED BY:	ASAD ABBAS	REV

USAID FROM THE AMERICAN PEOPLE	USAID POWER DISTRIBUTION PROGRAM	Drawing No.

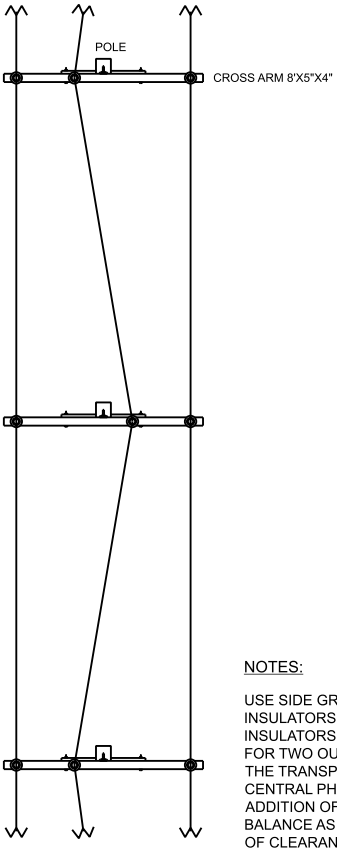

NOTES:

USE SIDE GROOVES OF PIN INSULATORS FOR THE MIDDLE INSULATORS AND TOP GROOVE FOR TWO OUTER CONDUCTORS. THE TRANSPORTATION OF CENTRAL PHASE PROVIDES THE ADDITION OF MECHANICAL BALANCE AS WELL AS INCREASE OF CLEARANCE BETWEEN CONDUCTORS AT THE MID SPAN.

SKETCH SHOWING TRANSPOSITION CENTRAL PHASE OF 11 kV LINE FOR OBTAINING MECHANICAL BALANCE

DIGITIZED BY:	ASAD ABBAS	REV

USAID FROM THE AMERICAN PEOPLE	USAID POWER DISTRIBUTION PROGRAM	Drawing No. GW/DF-48

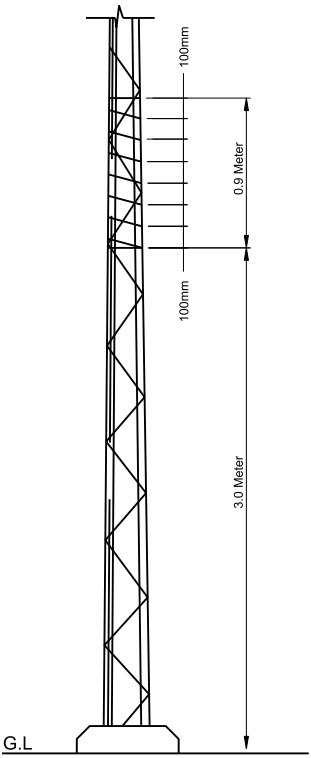

STEEL STRUCTURE

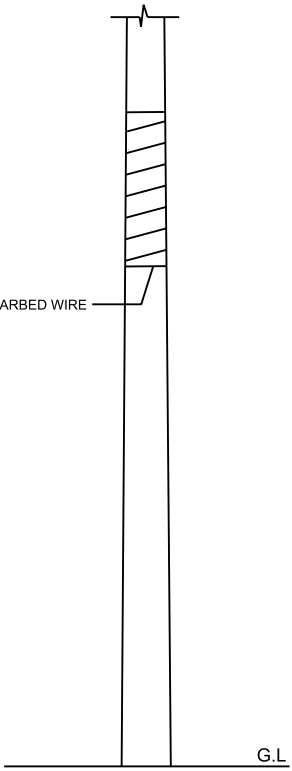

R.C.C. OR WOODEN POLE

ANTI CLIMBING DEVICE FOR 11 KV POLES & STRUCTURES

DIGITIZED BY:	ASAD ABBAS	REV

USAID FROM THE AMERICAN PEOPLE	USAID POWER DISTRIBUTION PROGRAM	Drawing No. PDW/DF-171

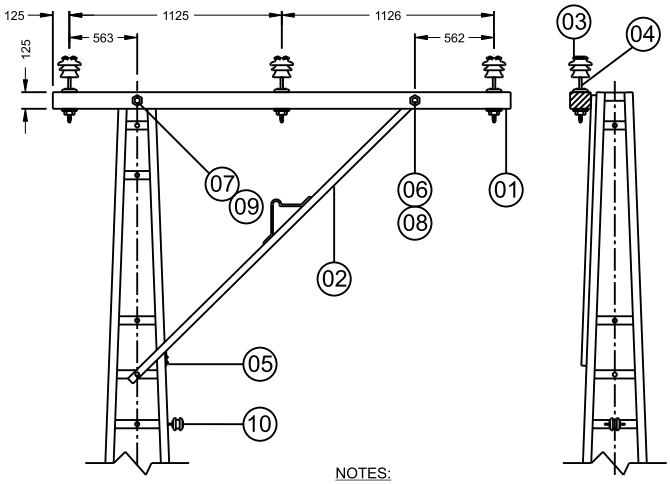

NOTES:

USE THIS ASSEMBLY FOR STRAIGHT LINE & SMALL ANGLES NORMAL SPAN SHALL BE 125mm AND SAG OF 2.4mm AT 65 DEGREE "C" MINIMUM CLEARANCE BETWEEN CONDUCTORS 975mm. THE POLES SHALL BE INDIVIDUALLY EARTHED ALSO RUN RABBIT CONDUCTOR AS EARTH WIRE ON THE ALUMINUM REEL (ITEM 10).

APPLICATION TABLE

CONDUCTOR	LINE ANGLES
GOPHER	0 to 10°
RABBIT	0 to 06°
D O G	0 to 03°

ITEM	QTY:	DESCRIPTION	WAPDA SPEC No.	DRG. #
01	01	Wooden cross arm (X-33)	P-1	PDW/DF-181
02	01	Cross arm step braces (SB-33)	P-101	PDW/DF-178
03	03	33 kV pin type insulator	P-17	EW/DF-280
04	03	Insulator pin	P-18	PDW/DF-183
05	01	MS. bolt 5/8" x 33mm	P-19	EW/DF-260
06	01	MS. bolt 1/2" x 150mm	P-19	EW/DF-286
07	01	MS. bolt 5/8" x 365mm	P-19	EW/DF-260
08	01	Round washer 32, dia 14hole	P-20	EW/DF-268
09	01	Square washer 57 x 57, 18 hole	P-20	EW/DF-269
10	01	Aluminum reel with bolt		PDW/DF-173

33 kV SINGLE CROSS ARM ASSEMBLY FOR LATTICE STEEL POLE

DIGITIZED BY:	ASAD ABBAS	REV

USAID FROM THE AMERICAN PEOPLE	USAID POWER DISTRIBUTION PROGRAM	Drawing No. PDW/DF-172

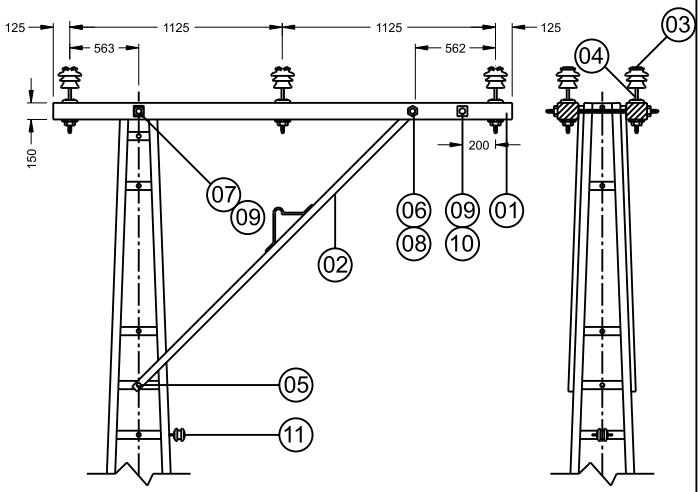

APPLICATION TABLE

CONDUCTOR	LINE ANGLES
GOPHER	0 to 20°
RABBIT	0 to 15°
D O G	0 to 05°

ALL DIMENSIONS IN MILLIMETERS.

ITEM	QTY:	DESCRIPTION	WAPDA SPEC No.	DRG. #
01	02	Wooden cross arm (X-33)	P-1	PDW/DF-181
02	02	Cross arm step braces (SB-33)	P-101	PDW/DF-178
03	06	33 kV pin type insulator	P-17	EW/DF-280
04	06	Insulator pin	P-18	PDW/DF-183
05	02	MS. bolt 5/8" x 33mm	P-19	EW/DF-260
06	02	MS. bolt 1/2" x 150mm	P-19	EW/DF-286
07	01	MS. bolt 5/8" x 365mm	P-19	EW/DF-260
08	02	Round washer 32, dia 14hole	P-20	EW/DF-268
09	06	Square washer 57 x 57, 18 hole	P-20	EW/DF-269
10	01	Double Arming bolt ⅝" x 508mm	PD-56a	EW/DF-270
11	01	Aluminum reel with bolt		PDW/DF-173

33 kV DOUBLE CROSS ARM ASSEMBLY FOR LATTICE STEEL POLE

DIGITIZED BY:	ASAD ABBAS	REV

USAID FROM THE AMERICAN PEOPLE	USAID POWER DISTRIBUTION PROGRAM	Drawing No. PDW/DF-172A

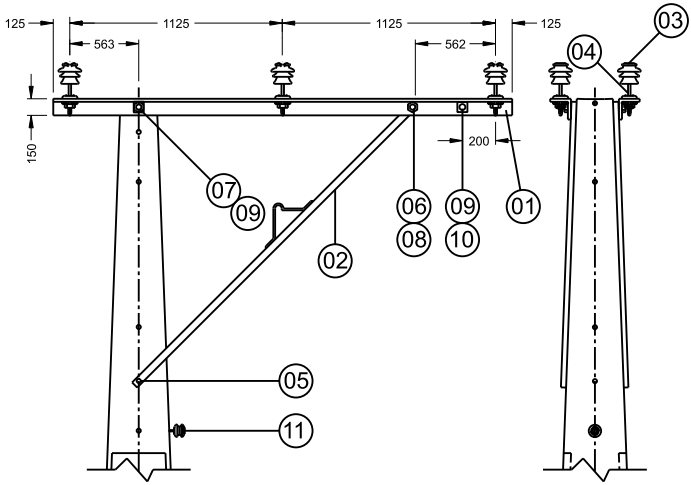

APPLICATION TABLE

CONDUCTOR	LINE ANGLES
GOPHER	0 to 20°
RABBIT	0 to 15°
D O G	0 to 05°

ALL DIMENSIONS IN MILLIMETERS.

ITEM	QTY:	DESCRIPTION	WAPDA SPEC No.	DRG. #
01	02	Steel cross arm	P-1	PDW/DF-181
02	02	Cross arm step braces (SB-33)	P-101	PDW/DF-178
03	06	33 kV pin type insulator	P-17	EW/DF-280
04	06	Insulator pin	P-18	PDW/DF-183
05	02	MS. bolt 5/8" x 33mm	P-19	EW/DF-260
06	02	MS. bolt 1/2" x 150mm	P-19	EW/DF-286
07	01	MS. bolt 5/8" x 365mm	P-19	EW/DF-260
08	02	Round washer 32, dia 14hole	P-20	EW/DF-268
09	06	Square washer 57 x 57, 18 hole	P-20	EW/DF-269
10	01	Double Arming bolt 5/8" x 508mm	PD-56a	EW/DF-270
11	01	Aluminum reel with bolt		PDW/DF-173

F33 kV DOUBLE STEEL CROSS-ARM ASSEMBLY FOR CONCRETE POLE

DIGITIZED BY:	ASAD ABBAS	REV

USAID FROM THE AMERICAN PEOPLE	USAID POWER DISTRIBUTION PROGRAM	Drawing No. PDW/DF-175

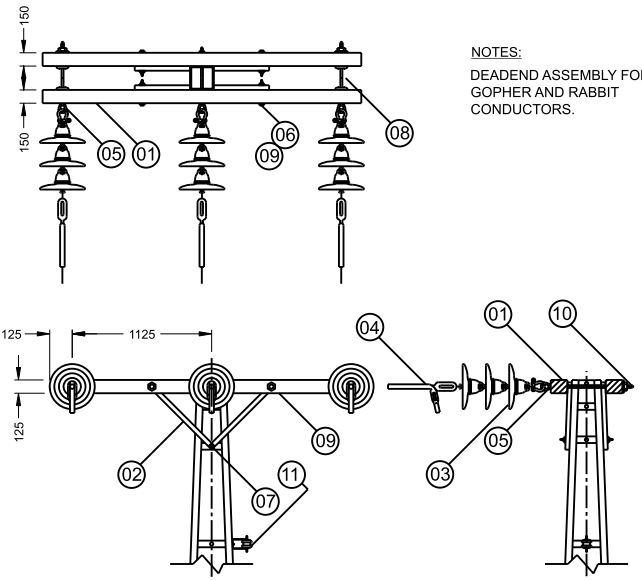

NOTES:

DEADEND ASSEMBLY FOR GOPHER AND RABBIT CONDUCTORS.

ALL DIMENSIONS IN MILLIMETERS.

ITEM	QTY:	DESCRIPTION	WAPDA SPEC. #	DRG. #
01	02	33 kV. Wood Crossarm (X-33)	P-1	PDW/DF-181
02	04	11 kV. Cross arm Brace (B-11)	P-101	PDW/DF-178
03	09	11 kV. Disc Insulator clevis Eye Type	P-8	EW/DF-257
04	03	Dead end Clamp	PD-73	EW/DF-259
05	03	Eye- nut 5/8"	-	GW/DF-36
06	04	MS. bolt 3/8" x 175mm	P-19	EW/DF-272
07	02	MS. bolt 5/8" x 50mm	P-19	EW/DF-260
08	03	Double arming bolt, 5/8" x 558mm	PD-56a	EW/DF-270
09	04	Round washer 25 Ø,11 hole	P-20	EW/DF-268
10	10	Square washer 57 x 57 x 18 hole	P-20	EW/DF-269
11	01	Aluminum reel with bolt	-	PND/DF-173

33 kV HORIZONTAL SINGLE DEADEND ASSEMBLY (WOOD CROSS ARM) FOR LATTICE STEEL POLE

DIGITIZED BY:	ASAD ABBAS	REV

USAID FROM THE AMERICAN PEOPLE	USAID POWER DISTRIBUTION PROGRAM	Drawing No. PDW/DF-176

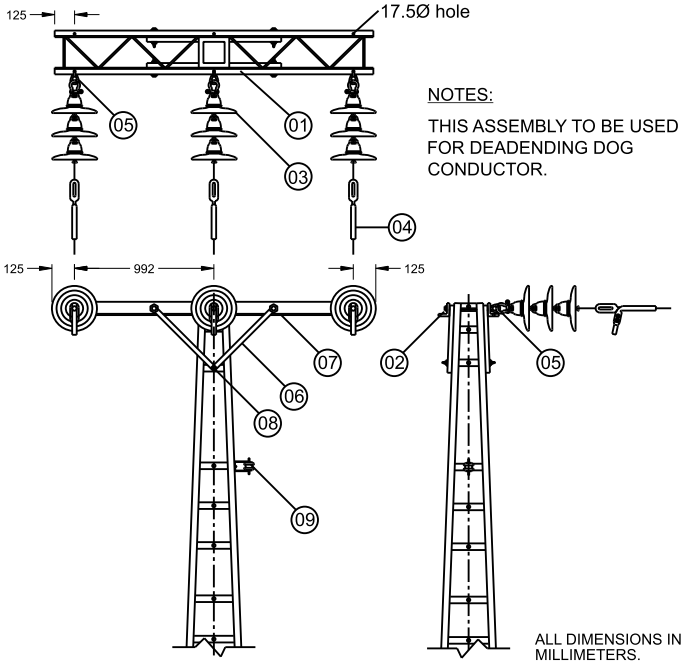

NOTES:

THIS ASSEMBLY TO BE USED FOR DEADENDING DOG CONDUCTOR.

ALL DIMENSIONS IN MILLIMETERS.

ITEM	QTY:	DESCRIPTION	WAPDA SPEC. #	DRG. #
01	01	Lattice Steel Cross arm	PD-91	EW/DF-288
02	02	M.S BOLT 5/8" x 50mm	P-19	EW/DF-260
03	09	11 kV. Disc Insulator clevis Eye Type	P-8	EW/DF-257
04	03	Dead end Clamp	PD-73	EW/DF-259
05	03	Anchor Shackle	PD-74	EW/DF-266
06	04	11 kV Cross arm Brace	P-101	PDW/DF-178
07	04	MS. bolt 3/8" x 50mm	P-19	EW/DF-272
08	02	MS. bolt 5/8" x 50mm	P-19	EW/DF-260
09	01	Aluminum reel with bolt	-	PDW/DF-173

33 kV HORIZONTAL SINGLE DEADEND ASSEMBLY (STEEL CROSS ARM) FOR LATTICE STEEL POLE

DIGITIZED BY:	ASAD ABBAS	REV

USAID FROM THE AMERICAN PEOPLE	USAID POWER DISTRIBUTION PROGRAM	Drawing No. PDW/DF-176-A

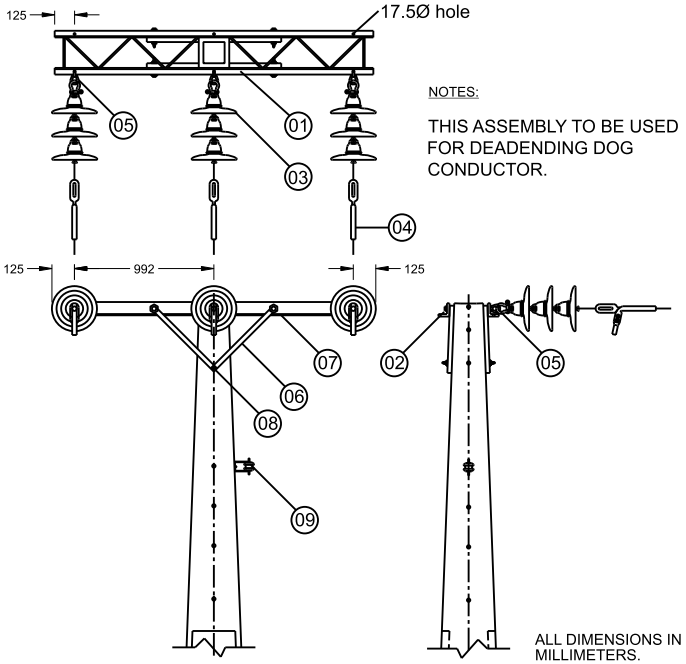

NOTES:

THIS ASSEMBLY TO BE USED FOR DEADENDING DOG CONDUCTOR.

ALL DIMENSIONS IN MILLIMETERS.

ITEM	QTY:	DESCRIPTION	WAPDA SPEC. #	DRG. #
01	01	Lattice Steel Cross arm	PD-91	EW/DF-288
02	02	M.S BOLT 5/8" x 50mm	P-19	EW/DF-260
03	09	11 kV. Disc Insulator clevis Eye Type	P-8	EW/DF-257
04	03	Dead end Clamp	PD-73	EW/DF-259
05	03	Anchor Shackle	PD-74	EW/DF-266
06	04	11 kV Cross arm Brace	P-101	PDW/DF-178
07	04	MS. bolt 3/8" x 50mm	P-19	EW/DF-272
08	02	MS. bolt 5/8" x 50mm	P-19	EW/DF-260
09	01	Aluminum reel with bolt	-	PDW/DF-173

33 kV HORIZONTAL SINGLE DEADEND ASSEMBLY (STEEL CROSS ARM) FOR CONCRETE POLE

DIGITIZED BY:	ASAD ABBAS	REV

USAID FROM THE AMERICAN PEOPLE	USAID POWER DISTRIBUTION PROGRAM	Drawing No. PDW/DF - 177

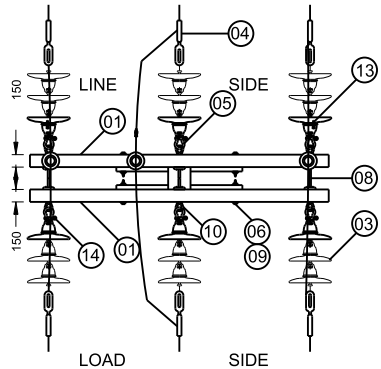

NOTES:

OMIT ANCHOR SHACKLES FOR LINE ANGLES 5° OR LESS.

ALL DIMENSIONS IN MILLIMETERS.

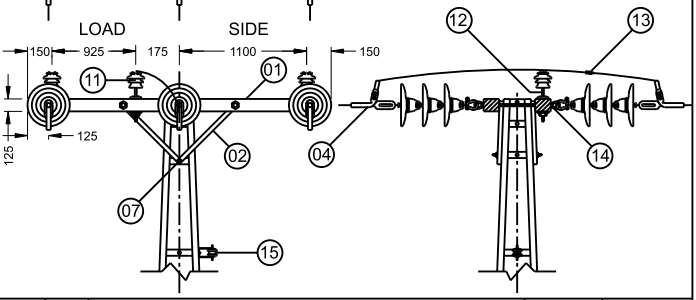

ITEM	QTY:	DESCRIPTION	WAPDA SPEC: No.	DRG. No.
01	02	33 kV WOOD CROSS ARM (X-33)	P-1	PDW/DF-251
02	04	11 kV CROSS ARM BRACE (B-11)	P-101	PDW/DF-178
03	18	11 kV. DISC INSULATOR CLEVIS EYE TYPE	P-8	EW/DF-257
04	06	DEAD EN CLAMP	PD-73	EW/DF-259
05	06	EYE NUT 5/8"	PD-75	GW/DF-36
06	04	MS BOLT 3/8" x 175mm	P-19	EW/DF-286
07	02	MS BOLT 1/2" x 50mm	P-19	EW/DF-286
08	03	DOUBLE ARMING BOLT 5/8" x 558mm	PD-56A	EW/DF-270
09	04	ROUND WASHER, 25Ø, 11 HOLE	P-20	EW/DF-268
10	10	SQUARE WASHER 57x57, 18 HOLE	P-20	EW/DF-269
11	03	33 kV. PIN TYPE INSULATOR	P-17	EW/DF-280
12	03	INSULATOR PIN	P-18	PDW/DF-183
13	06	P.G CLAMP 2 BOLT TYPE	P-25	EW/DF-271
14	06	ANCHOR SHACKLE	P-74	EW/DF-266
15	01	ALUMINUM REEL WITH BOLT		PDW/DF-173

33 KV HORIZONTAL DOUBLE DEADEND ASSEMBLY (WOOD CROSS ARM)

DIGITIZED BY:	ASAD ABBAS	REV

USAID FROM THE AMERICAN PEOPLE	USAID POWER DISTRIBUTION PROGRAM	Drawing No. PDW/DF - 177A

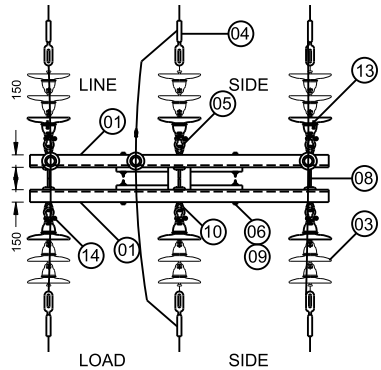

NOTES:

OMIT ANCHOR SHACKLES FOR LINE ANGLES 5° OR LESS.

ALL DIMENSIONS IN MILLIMETERS.

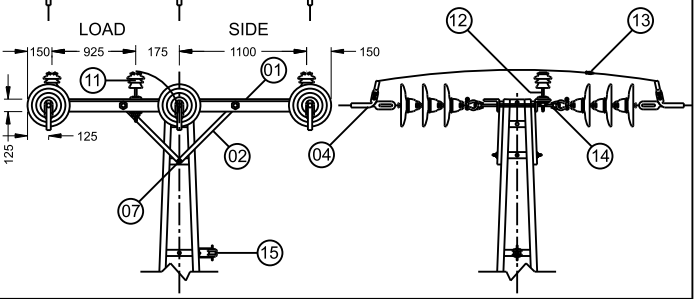

ITEM	QTY:	DESCRIPTION	WAPDA SPEC: No.	DRG. No.
01	02	33 kV STEEL CROSS ARMS		
02	04	11 kV CROSS ARM BRACE (B-11)	P-101	PDW/DF-178
03	18	11 kV. DISC INSULATOR CLEVIS EYE TYPE	P-8	EW/DF-257
04	06	DEAD EN CLAMP	PD-73	EW/DF-259
05	06	EYE NUT 5/8"	PD-75	GW/DF-36
06	04	MS BOLT 3/8" x 175mm	P-19	EW/DF-286
07	02	MS BOLT 1/2" x 50mm	P-19	EW/DF-286
08	03	DOUBLE ARMING BOLT 5/8" x 558mm	PD-56A	EW/DF-270
09	04	ROUND WASHER, 25Ø, 11 HOLE	P-20	EW/DF-268
10	10	SQUARE WASHER 57x57, 18 HOLE	P-20	EW/DF-269
11	03	33 kV. PIN TYPE INSULATOR	P-17	EW/DF-280
12	03	INSULATOR PIN	P-18	PDW/DF-183
13	06	P.G CLAMP 2 BOLT TYPE	P-25	EW/DF-271
14	06	ANCHOR SHACKLE	P-74	EW/DF-266
15	01	ALUMINUM REEL WITH BOLT		PDW/DF-173

33 KV HORIZONTAL DOUBLE DEADEND ASSEMBLY (STEEL CROSS ARM)

DIGITIZED BY:	ASAD ABBAS	REV

USAID FROM THE AMERICAN PEOPLE	USAID POWER DISTRIBUTION PROGRAM	Drawing No. PDW/DF-182

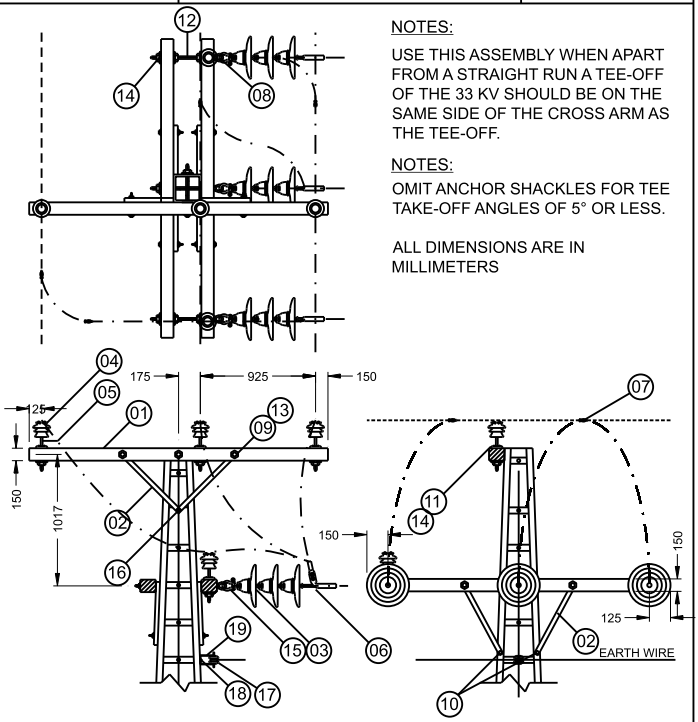

NOTES:

USE THIS ASSEMBLY WHEN APART FROM A STRAIGHT RUN A TEE-OFF OF THE 33 KV SHOULD BE ON THE SAME SIDE OF THE CROSS ARM AS THE TEE-OFF.

NOTES:

OMIT ANCHOR SHACKLES FOR TEE TAKE-OFF ANGLES OF 5° OR LESS.

ALL DIMENSIONS ARE IN MILLIMETERS

ITEM	QTY	DESCRIPTION	DRG. #	ITEM	QTY	DESCRIPTION	DRG. #
01	03	Wooden cross arm (X-33)	PDW/DF-181	11	01	MS. bolt 5/8" x 356mm	EW/DF-260
02	06	11kV crossarm brace (B-11)	PDW/DF-178	12	03	Double arming bolt 5/8" x 508mm	EW/DF-270
03	09	11 kV disc insu. clevis - eye type	EW/DF-257	13	06	Round washer 25Ø, 11 hole	EW/DF-268
04	04	33 kV pin type insulator	EW/DF-280	14	11	Square washer 57 x 57, 18 hole	EW/DF-269
05	04	Insulator pin	PDW/DF-183	15	03	Anchor shackle	EW/DF-266
06	03	Deadend clamp.	EW/DF-259	16	01	M.S bolt 5/8" x 50mm	EW/DF-260
07	03	PG clamp, two bolt type	EW/DF-271	17	01	Aluminum reel with bolt	PDW/DF-173
08	03	Eye- nut 5/8"	GW/DF-36	18	01	M.S bolt 5/8" x 38mm	EW/DF-260
09	06	MS. bolt 3/8" x 175mm	EW/DF-272	19	01	D-Shackle strap	GW/DF-13
10	04	MS. bolt 1/2" x 50mm	EW/DF-286				

33 kV TEE-OFF ASSEMBLY FOR LATTICE STEEL POLE

DIGITIZED BY:	ASAD ABBAS	REV

USAID FROM THE AMERICAN PEOPLE	USAID POWER DISTRIBUTION PROGRAM	Drawing No. PDW/DF-182A

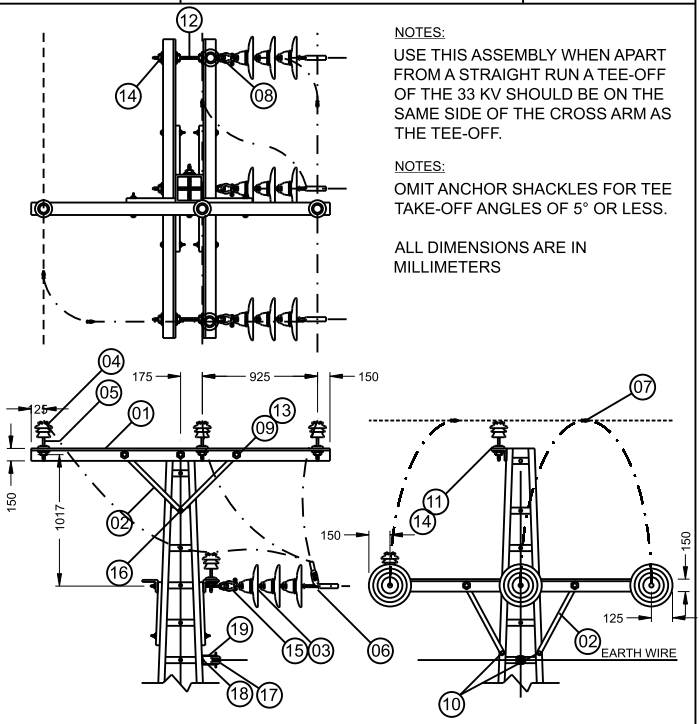

NOTES:

USE THIS ASSEMBLY WHEN APART FROM A STRAIGHT RUN A TEE-OFF OF THE 33 KV SHOULD BE ON THE SAME SIDE OF THE CROSS ARM AS THE TEE-OFF.

NOTES:

OMIT ANCHOR SHACKLES FOR TEE TAKE-OFF ANGLES OF 5° OR LESS.

ALL DIMENSIONS ARE IN MILLIMETERS

ITEM	QTY	DESCRIPTION	DRG. #	ITEM	QTY	DESCRIPTION	DRG. #
01	03	Steel cross arms		11	01	MS. bolt 5/8" x 356mm	EW/DF-260
02	06	11kV crossarm brace (B-11)	PDW/DF-178	12	03	Double arming bolt 5/8" x 508mm	EW/DF-270
03	09	11 kV disc insu. clevis - eye type	EW/DF-257	13	06	Round washer 25Ø, 11 hole	EW/DF-268
04	04	33 kV pin type insulator	EW/DF-280	14	11	Square washer 57 x 57, 18 hole	EW/DF-269
05	04	Insulator pin	PDW/DF-183	15	03	Anchor shackle	EW/DF-266
06	03	Deadend clamp.	EW/DF-259	16	01	M.S bolt 5/8" x 50mm	EW/DF-260
07	03	PG clamp, two bolt type	EW/DF-271	17	01	Aluminum reel with bolt	PDW/DF-173
08	03	Eye- nut 5/8"	GW/DF-36	18	01	M.S bolt 5/8" x 38mm	EW/DF-260
09	06	MS. bolt 3/8" x 175mm	EW/DF-272	19	01	D-Shackle strap	GW/DF-13
10	04	MS. bolt 1/2 " x 50mm	EW/DF-286				

33 kV TEE-OFF ASSEMBLY FOR LATTICE STEEL POLE WITH STEEL CROSS ARMS

DIGITIZED BY:	ASAD ABBAS	REV

USAID
FROM THE AMERICAN PEOPLE

USAID POWER
DISTRIBUTION PROGRAM

Drawing No.
PDW/DF - 253

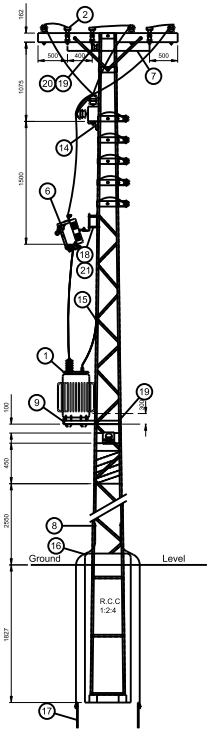

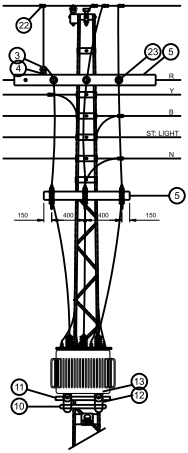

NOTES:

1. FOR 11 KV LINE MATERIAL SDI No. 40 SHALL BE FOLLOWED.

2. 'H' TYPE STRUCTURE SHALL ALSO BE EARTH IN ACCORDANCE WITH SDI No.59

3. FOR THE INSTALLATION OF LIGHTENING ARRESTERS CLAUSE NO. 45 OF THIS SDI SHALL BE FOLLOWED.

S#	DESCRIPTION	QTY:	DRG. #	SPEC:	S#	DESCRIPTION	QTY:	DRAWING	SPEC:
1	TRANSFORMER	1	-	P-13	13	J. BOLT (JB)	4	PDW / DF 218	P-112
2	LIGHTENING ARRESTER	3	DSW/DF-9	P-11	14	ANGLE IRON BRACKET (BSP)	4	PDW / DF 244	P-112
3	PIN INSULATOR	4	-	P-6	15	CABLE CLAMP (CCS)	4	PDW / DF 241	P-112
4	INSULATOR PIN	4	-	P-24	16	GROUND CONDUCTOR CLAMP (S)	2	PDW / DF 236	P-111
5	1225 LG WOODEN X-ARM	3	-	P-1	17	EARTHING ROD WITH CLAMP	1	PDW / DF 237	P-111
6	DROPOUT CUTOUT ASSEMBLY	3	PDW / DF 170	P-68	18	12Ø 150 LG. M.S BOLT	4	EW / DF 286	P-19
7	GANT CONDUCTOR	2M	-	P-63	19	12Ø 37 LG. M.S BOLT	17	EW / DF 286	P-19
8	G.S STRANDED WIRE 10 Ø	8M	-	P-12	20	ROUND WASHER 14Ø HOLE	4	EW / DF 268	P-20
9	CHANNEL 100x50x1200mm (C1200)	2	PDW / DF 238	P-112	21	SQARE WASHER 50x50x3	12	EW / DF 269	P-20
10	CHANNEL 100x50x600mm (C600)	2	PDW / DF 238	P-112	22	P.G CLAMP	12	-	P-25
11	CHANNEL 100x50x800mm (C800)	2	PDW / DF 238	P-112	23	TIE WIRE 4Ø	7M	-	P-22
12	U. BOLT (UB)	4	PDW / DF 240	P-112					

25 OR 50 KVa DISTRIBUTION TRANSFORMER STATION ON SINGLE STRUTURE (DTS-15)

DIGITIZED BY:	ASAD ABBAS	REV

USAID POWER DISTRIBUTION PROGRAM	Drawing No. PDW/DF - 253A

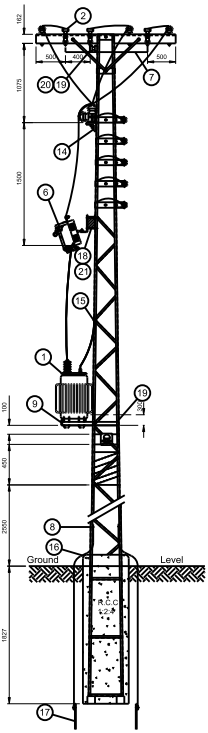

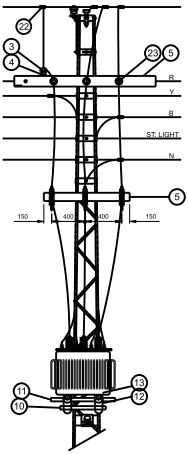

NOTES:

1. FOR 11 KV LINE MATERIAL SDI No. 40 SHALL BE FOLLOWED.

2. 'H' TYPE STRUCTURE SHALL ALSO BE EARTH IN ACCORDANCE WITH SDI No.59

3. FOR THE INSTALLATION OF LIGHTENING ARRESTERS CLAUSE NO. 45 OF THIS SDI SHALL BE FOLLOWED.

S#	DESCRIPTION	QTY:	DRG. #	SPEC:	S#	DESCRIPTION	QTY:	DRAWING	SPEC:
1	TRANSFORMER	1	-	P-13	13	J. BOLT (JB)	4	PDW / DF 218	P-112
2	LIGHTENING ARRESTER	3	DSW/DF-9	P-11	14	ANGLE IRON BRACKET (BSP)	4	PDW / DF 244	P-112
3	PIN INSULATOR	4	-	P-6	15	CABLE CLAMP (CCS)	4	PDW / DF 241	P-112
4	INSULATOR PIN	4	-	P-24	16	GROUND CONDUCTOR CLAMP (S)	2	PDW / DF 236	P-111
5	STEEL CROSS ARM	3	-	P-1	17	EARTHING ROD WITH CLAMP	1	PDW / DF 237	P-111
6	DROPOUT CUTOUT ASSEMBLY	3	PDW / DF 170	P-68	18	12Ø 150 LG. M.S BOLT	4	EW / DF 286	P-19
7	GANT CONDUCTOR	2M	-	P-63	19	12Ø 37 LG. M.S BOLT	17	EW / DF 286	P-19
8	G.S STRANDED WIRE 10 Ø	8M	-	P-12	20	ROUND WASHER 14Ø HOLE	4	EW / DF 268	P-20
9	CHANNEL 100x50x1200mm (C1200)	2	PDW / DF 238	P-112	21	SQARE WASHER 50x50x3	12	EW / DF 269	P-20
10	CHANNEL 100x50x600mm (C600)	2	PDW / DF 238	P-112	22	P.G CLAMP	12	-	P-25
11	CHANNEL 100x50x800mm (C800)	2	PDW / DF 238	P-112	23	TIE WIRE 4Ø	7M	-	P-22
12	U. BOLT (UB)	4	PDW / DF 240	P-112					

25 OR 50 KVa DISTRIBUTION TRANSFORMER STATIONON SINGLE STRUCTURE (DTS-15) STEEL CROSS ARMS

DIGITIZED BY:	ASAD ABBAS	REV

USAID
FROM THE AMERICAN PEOPLE

USAID POWER DISTRIBUTION PROGRAM

Drawing No.
PDW/DF - 254

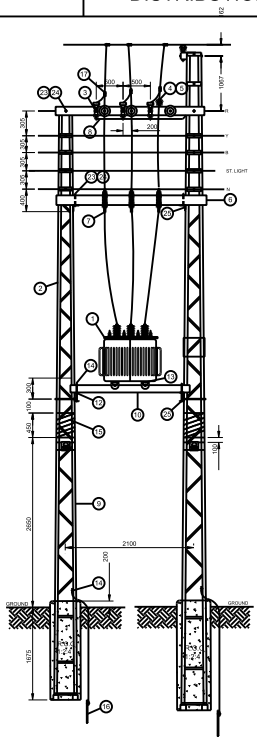

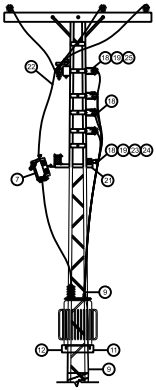

NOTES:

1. FOR 11 KV LINE MATERIAL SDI No. 40 SHALL BE FOLLOWED.

2. 'H' TYPE STRUCTURE SHALL ALSO BE EARTH IN ACCORDANCE WITH SDI No.59

3. FOR THE INSTALLATION OF LIGHTENING ARRESTERS CLAUSE NO. 45 OF THIS SDI SHALL BE FOLLOWED.

S#	DESCRIPTION	QTY:	DRAWING	SPEC:	S#	DESCRIPTION	QTY:	DRAWING	SPEC:
1	TRANSFORMER	1		P-13	15	ANTI CLIMBING DEVICE	13M		PD-76
2	LATTICE STEEL STRUCTURE	1	PDW / DF-10	P-34	16	EARTHING ROD WITH CLAMP	1	PDW / DF 234	P-111
3	LIGHTNING ARRESTER	3	DSW/DF-9	P-11	17	P.G CLAMP	12		P-25
4	PIN INSULATOR	4		P-6	18	D-SHAKEL	9		PD-68
5	INSULATOR PIN	4		P-24	19	SPOOL INSULATOR	8		P-4
6	WOODEN X-ARM (X-11)	3	PDW / DF 185	P-1	20	ALUMINUM REEL	1	PDW / DF 173	
7	DROPOUT CUTOUT ASSEMBLY	3	PDW / DF 170	P-68	21	ANGLE IRON 50x50x6x200mm	2	PDW / DF 239	P-112
8	GANT CONDUCTOR	2M		P- 63	22	TIE WIRE 4Ø	27M		P-22
9	G.S STRANDED WIRE 10 Ø	8M		P-12	23	12Ø 150 LG. M.S BOLT	10	EW / DF 286	P-19
10	CHANNEL 100 x 50 x 2000 mm	2	PDW / DF 238	P-112	24	SQUARE WASHER 50x50x3	10	EW / DF 269	P-20
11	CHANNEL 100x50x600 mm C600	2	PDW / DF 238	P-112	25	12Ø 37 LG. M.S BOLT	9	EW / DF 286	P-19
12	U. BOLT	4	PDW / DF 240	P-112	26	ROUND WASHER 14Ø HOLE	2	EW / DF 268	P-20
13	J. BOLT	4	PDW / DF 218	P-112					
14	GROUND CONDUCTOR	2	PDW / DF 236	P-111					

100 OR 200 KVa DISTRIBUTION TRANSFORMER STATION ON DOUBLE STRUCTURES (DTS-25)

DIGITIZED BY:	ASAD ABBAS	REV

USAID FROM THE AMERICAN PEOPLE	USAID POWER DISTRIBUTION PROGRAM	Drawing No. PDW/DF - 255

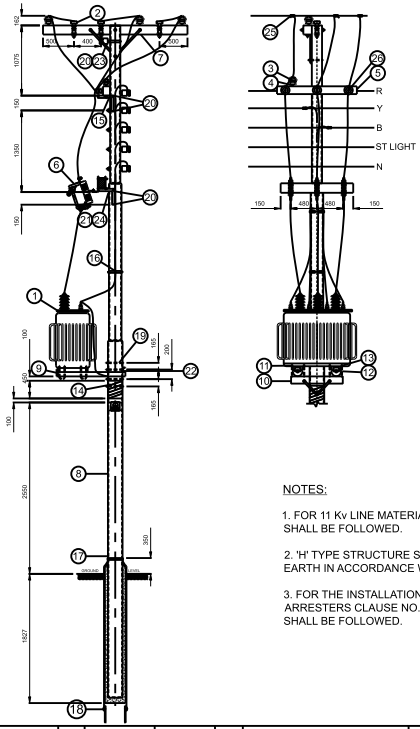

NOTES:

1. FOR 11 Kv LINE MATERIAL SDI No. 40 SHALL BE FOLLOWED.

2. 'H' TYPE STRUCTURE SHALL ALSO BE EARTH IN ACCORDANCE WITH SDI No.59

3. FOR THE INSTALLATION OF LIGHTENING ARRESTERS CLAUSE NO. 45 OF THIS SDI SHALL BE FOLLOWED.

S#	DESCRIPTION	QTY:	DRAWING	SPEC:	S#	DESCRIPTION	QTY:	DRAWING	SPEC:
1	TRANSFORMER	1		P-13	15	STRANDED ANGLE IRON BRACKET	4	PDW / DF 244	P-112
2	LIGHTENING ARRESTER	3	DSW/DF-9	P-11	16	CABLE CLAMP	2	PDW / DF 245	P-112
3	PIN INSULATOR	4		P-6	17	GROUND CONDUCTOR CLAMP	2	PDW / DF 231	P-111
4	INSULATOR PIN	4		P-24	18	EARTHING ROD WITH CLAMP	1	PDW / DF 237	P-111
5	1225 LG WOODEN X-ARM	2	PDW / DF 185	P-1	19	16Ø 300 LG. M.S BOLT	4		P-19
6	OROPOUT CUTOUT ASSEMBLY	3	PDW / DF 170	P-68	20	16Ø 225 LG. M.S BOLT	5		P-19
7	GANT CONDUCTOR	2M		P-63	21	12Ø 150 LG. M.S BOLT	4	EW / DF 286	P-19
8	G.S STRANDED WIRE 10 Ø	8M		P-12	22	12Ø 37 LG. M.S BOLT	8	EW / DF 286	P-19
9	CHANNEL 100 x 50 x 1200 mm	2	PDW / DF 238	P-112	23	ROUND WASHER 14Ø HOLE	2	EW / DF 268	P-20
10	CHANNEL 100x50x600 mm C600	2	PDW / DF 238	P-112	24	SQARE WASHER 50x50x3	4	EW / DF 269	P-20
11	CHANNEL 100x50x800 mm C800	2	PDW / DF 238	P-112	25	P.G CLAMP	12		P-25
12	U. BOLT	4	PDW / DF 240	P-112	26	TIE WIRE 4Ø	7M		P-22
13	J. BOLT	4	PDW / DF 218	P-112					
14	BRACE 80x400x5mm	4	PDW / DF 242	P-112					

25 OR 50 KVa DISTRIBUTION TRANSFORMER STATION ON SINGLE POLE (DTS-IP)

DIGITIZED BY:	ASAD ABBAS	REV

USAID FROM THE AMERICAN PEOPLE	USAID POWER DISTRIBUTION PROGRAM	Drawing No. PDW/DF - 255A

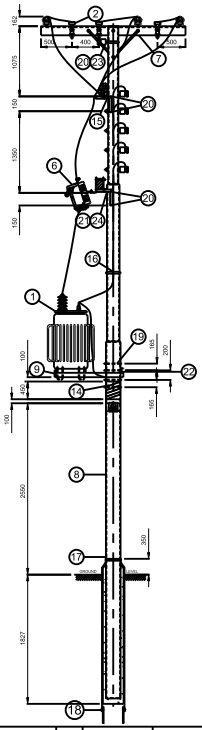

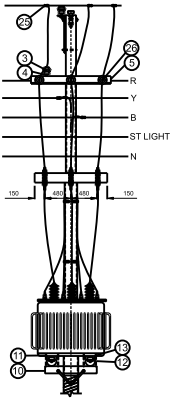

NOTES:

1. FOR 11 Kv LINE MATERIAL SDI No. 40 SHALL BE FOLLOWED.

2. 'H' TYPE STRUCTURE SHALL ALSO BE EARTH IN ACCORDANCE WITH SDI No.59

3. FOR THE INSTALLATION OF LIGHTENING ARRESTERS CLAUSE NO. 45 OF THIS SDI SHALL BE FOLLOWED.

S#	DESCRIPTION	QTY:	DRAWING	SPEC:	S#	DESCRIPTION	QTY:	DRAWING	SPEC:
1	TRANSFORMER	1		P-13	15	STRANDED ANGLE IRON BRACKET	4	PDW / DF 244	P-112
2	LIGHTENING ARRESTER	3	DSW/DF-9	P-11	16	CABLE CLAMP	2	PDW / DF 245	P-112
3	PIN INSULATOR	4		P-6	17	GROUND CONDUCTOR CLAMP	2	PDW / DF 231	P-111
4	INSULATOR PIN	4		P-24	18	EARTHING ROD WITH CLAMP	1	PDW / DF 237	P-111
5	STEEL CROSS ARM	2		P-1	19	16Ø 300 LG. M.S BOLT	4		P-19
6	OROPOUT CUTOUT ASSEMBLY	3	PDW / DF 170	P-68	20	16Ø 225 LG. M.S BOLT	5		P-19
7	GANT CONDUCTOR	2M		P-63	21	12Ø 150 LG. M.S BOLT	4	EW / DF 286	P-19
8	G.S STRANDED WIRE 10 Ø	8M		P-12	22	12Ø 37 LG. M.S BOLT	8	EW / DF 286	P-19
9	CHANNEL 100 x 50 x 1200 mm	2	PDW / DF 238	P-112	23	ROUND WASHER 14Ø HOLE	2	EW / DF 268	P-20
10	CHANNEL 100x50x600 mm C600	2	PDW / DF 238	P-112	24	SQARE WASHER 50x50x3	4	EW / DF 269	P-20
11	CHANNEL 100x50x800 mm C800	2	PDW / DF 238	P-112	25	P.G CLAMP	12		P-25
12	U. BOLT	4	PDW / DF 240	P-112	26	TIE WIRE 4Ø	7M		P-22
13	J. BOLT	4	PDW / DF 218	P-112					
14	BRACE 80x400x5mm	4	PDW / DF 242	P-112					

25 OR 50 KVa DISTRIBUTION TRANSFORMER STATION ON SINGLE POLE (DTS-IP) STEEL CROSS ARM

DIGITIZED BY:	ASAD ABBAS	REV

USAID FROM THE AMERICAN PEOPLE	USAID POWER DISTRIBUTION PROGRAM	Drawing No. PDW/DF - 256

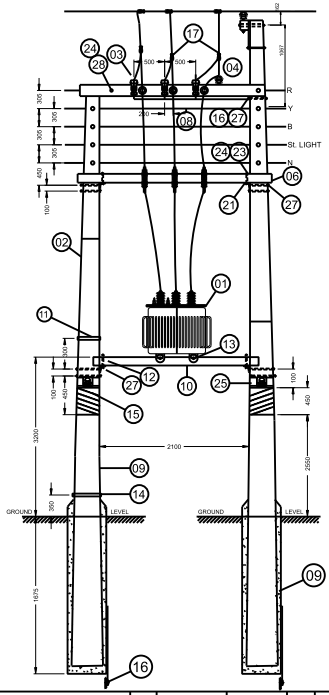

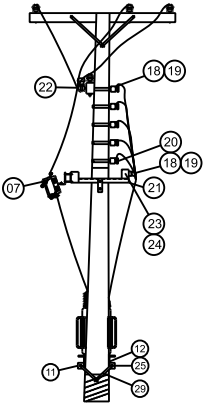

NOTES:

1. FOR 11 Kv LINE MATERIAL SDI No. 40 SHALL BE FOLLOWED.

2. 'H' TYPE TUBULAR POLE SHALL ALSO BE EARTH IN ACCORDANCE WITH SDI No.59

3. FOR THE INSTALLATION OF LIGHTENING ARRESTERS CLAUSE NO. 4.5 OF THIS SDI SHALL BE FOLLOWED.

S#	DESCRIPTION	QTY:	DRAWING	SPEC:	S#	DESCRIPTION	QTY:	DRAWING	SPEC:
1	TRANSFORMER	1		P-13	15	ANTI CLIMBING DEVICE	13M		PD-76
2	L TYPE TUBLER POLE	1	PDW/DF-153	P-94	16	EARTHING ROD WITH CLAMP	1	PDW / DF 237	P-111
3	LIGHTENING ARRESTER	3	DSW/DF 9	P-11	17	P.G CLAMP	12		P-25
4	PIN INSULATOR	4		P-6	18	D SHACKLE	9		PD-68
5	INSULATOR PIN	4		P-24	19	SPOOL INSULATOR	8		P-4
6	WOODEN CROSSARM (X-11)	3	PDW / DF 185	P-1	20	ALUMINUM REEL	1	PDW / DF 173	-
7	DOROPOUT CUTOUT ASSEMBLY	3	PDW / DF 170	P-68	21	STRANDED L IRON	2	PDW / DF 243	P-112
8	GANT CONDUCTOR	2M		P-63	22	TIE WIRE 4Ø	27M		P-22
9	G.S STRANDED WIRE 10 Ø	8M		P-12	23	12Øx150mm LONG M.S BOLT	14	EW / DF 286	P-19
10	CHANNEL 100 x 50 x 2000 mm	2	PDW / DF 238	P-112	24	SQUARE WASHER, 18Ø HOLE	14	EW / DF 269	P-20
11	CHANNEL 100x50x600 mm C600	2	PDW / DF 238	P-112	25	12Øx37mm LONG M.S BOLT	4	EW / DF 286	P-19
12	U. BOLT	4	PDW / DF 240	P-112	26	ROUND WASHER, 16Ø HOLE	2	EW / DF 268	P-20
13	J. BOLT	4	PDW / DF 218	P-112	27	16Øx225mm LONG M.S BOLT	9		P-19
14	GROUND CONDUCTOR CLAMPS	2	PDW / DF 231	P-111	28	16Øx300mm LONG M.S BOLT	9		P-19
					29	BRACE 50x400x3mm (B.P)	4	PDW / DF-242	P-112

100 OR 200 KVA DISTRIBUTION TRANSFORMER STATION ON DOUBLE POLES (DTS-2P)

DIGITIZED BY:	ASAD ABBAS	REV

USAID
FROM THE AMERICAN PEOPLE

USAID POWER DISTRIBUTION PROGRAM

Drawing No.
PDW/DF - 256

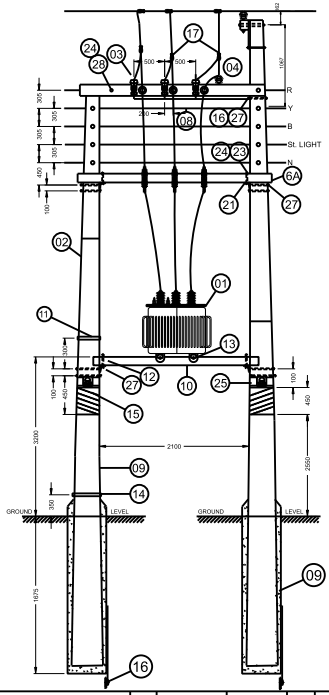

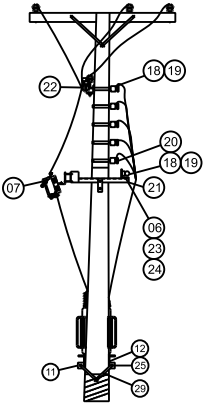

NOTES:

1. FOR 11 Kv LINE MATERIAL SDI No. 40 SHALL BE FOLLOWED.

2. 'H' TYPE TUBULAR POLE SHALL ALSO BE EARTH IN ACCORDANCE WITH SDI No.59

3. FOR THE INSTALLATION OF LIGHTENING ARRESTERS CLAUSE NO. 4.5 OF THIS SDI SHALL BE FOLLOWED.

S#	DESCRIPTION	QTY:	DRAWING	SPEC:	S#	DESCRIPTION	QTY:	DRAWING	SPEC:
1	TRANSFORMER	1		P-13	15	ANTI CLIMBING DEVICE	13M		PD-76
2	L TYPE TUBLER POLE	1	PDW/DF-153	P-94	16	EARTHING ROD WITH CLAMP	1	PDW / DF 237	P-111
3	LIGHTENING ARRESTER	3	DSW/DF 9	P-11	17	P.G CLAMP	12		P-25
4	PIN INSULATOR	4		P-6	18	D SHACKLE	9		PD-68
5	INSULATOR PIN	4		P-24	19	SPOOL INSULATOR	8		P-4
6	STEEL CROSSARM	3		P-1	20	ALUMINUM REEL	1	PDW / DF 173	-
7	DOROPOUT CUTOUT ASSEMBLY	3	PDW / DF 170	P-68	21	STRANDED L IRON	2	PDW / DF 243	P-112
8	GANT CONDUCTOR	2M		P-63	22	TIE WIRE 4Ø	27M		P-22
9	G.S STRANDED WIRE 10 Ø	8M		P-12	23	12Øx150mm LONG M.S BOLT	14	EW / DF 286	P-19
10	CHANNEL 100 x 50 x 2000 mm	2	PDW / DF 238	P-112	24	SQUARE WASHER, 18Ø HOLE	14	EW / DF 269	P-20
11	CHANNEL 100x50x600 mm C600	2	PDW / DF 238	P-112	25	12Øx37mm LONG M.S BOLT	4	EW / DF 286	P-19
12	U. BOLT	4	PDW / DF 240	P-112	26	ROUND WASHER, 16Ø HOLE	2	EW / DF 268	P-20
13	J. BOLT	4	PDW / DF 218	P-112	27	16Øx225mm LONG M.S BOLT	9		P-19
14	GROUND CONDUCTOR CLAMPS	2	PDW / DF 231	P-111	28	16Øx300mm LONG M.S BOLT	9		P-19
6A	WOODEN CROSSARM (X-11)	1	PDW / DF 185	P-1	29	BRACE 50x400x3mm (B.P)	4	PDW / DF-242	P-112

100 OR 200 KVA DISTRIBUTION TRANSFORMER STATION ON DOUBLE POLES (DTS-2P) STEEL CROSS ARMS

DIGITIZED BY:	ASAD ABBAS	REV

USAID FROM THE AMERICAN PEOPLE	USAID POWER DISTRIBUTION PROGRAM	Drawing No. CEDD/DDST/105

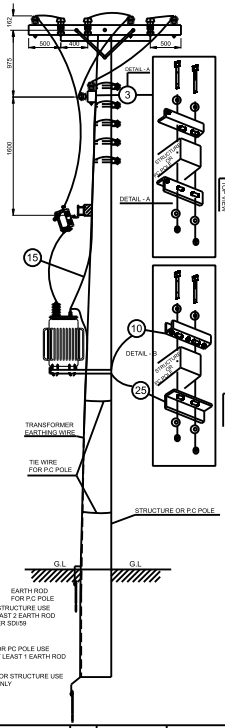

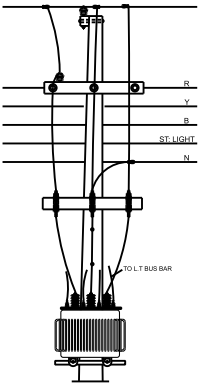

NOTES:

1. FOR 11 KV LINE MATERIAL SDI No. 40 SHALL ALSO BE FOLLOWED.

2. H TYPE STRUCTURE SHALL ALSO BE EARTHED IN ACCORDANCE WITH SDI No. 55

3. FOR THE INSTALLATION OF LIGHTENING ARRESTERS CLAUSE No. 45 OF THIS SDI. SHALL BE FOLLOWED

4. ALL DIMENSIONS ARE IN MM.

S#	DESCRIPTION	QTY:	DRAWING	SPEC:	S#	DESCRIPTION	QTY:	DRAWING	SPEC:
1	TRANSFORMER	1		P-13	15	L.T CABLE			
2	LIGHTENING ARRESTER	3	DSW/DF 9	P-34 P.5	16	GROUND CONDUCTOR CLAMPS	2	PDW / DF 236	P-111
3	PIN INSULATOR	4		P-6	17	EARTHING ROD WITH CLAMP	1	PDW / DF 237	P-111
4	INSULATOR PIN	4		P-24	18	1250 LG M.S BOLT FOR STRUC.	4	PDW / DF 286	P-19
5	1225 L.G WOODEN X-ARM	2	PDW / DF 170	P-1	19	1237 LG M.S BOLT FOR STRUC.	17	PDW / DF 286	P-19
6	DOROPOUT CUTOUT ASSEMBLY	3	PDW / DF 170	P-68	20	ROUND WASHER HOLE 14Ø	2	ED / DF 260	P-20
7	GANT CONDUCTOR	2M		P-63	21	SQARE WASHER 50x50x3	4	ED / DF 269	P-20
8	G.S STRANDED WIRE 10 Ø	8M		P-12	22	P.G CLAMPS	12		P-25
9	CHANNEL 100 x 50 x 2000 mm (C-1200)	2	PDW / DF 228	DD-S-46	23	TIE WIRE	7M		P-22
10	CHANNEL 100x50x600 mm (C-600)	2	PDW / DF 238	DD.S-46	24	CABLE			
11	CHANNEL 100x50x800 mm (C-800)	2	PDW / DF 238	DD.S-46	25	ANGLE IRON ASSEMBLY 50x360x50x6 - 600	4	CEDD / DDGT 108	DD-S-46
12	U. BOLT	4	PDW / DF 240	DD.S-46					
13	J. BOLT	4	PDW / DF 218	DD.S-46					
14	ANGLE IRON	2		DD.S-46					

25 OR 50 KVA DISTRIBUTION TRANSFORMER STATION ON SINGLE STRUCTURE / P.C POLE (DTS-15)

DIGITIZED BY:	ASAD ABBAS	REV

USAID
FROM THE AMERICAN PEOPLE

USAID POWER DISTRIBUTION PROGRAM

Drawing No.
CEDE/DDS1/106

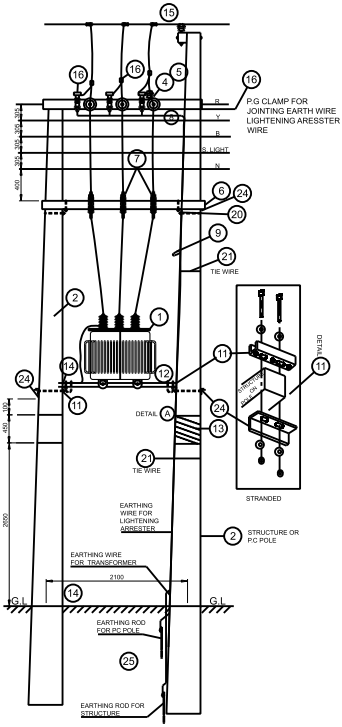

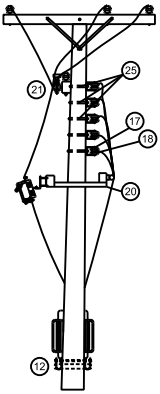

NOTES:

1. FOR 11KV LINE MATERIAL SDI No. 40 SHALL BE FOLLOWED.
2. "H" TYPE STRUCTURE SHALL ALSO BE EARTHED IN ACCORDANCE WITH SDI No. 59.
3. FOR THE INSTALLATION OF LIGHTENING ARRESTERS CLAUSE No. 45 OF THIS SDI SHALL BE FOLLOWED.
4. ALL DIMENSIONS ARE IN MM.

NOTE2:
USE GS STRANDED WIRE FOR EARTHING OF LIGHTING ARRESTERS FROM POINT No. 16

S#	DESCRIPTION	QTY:	DRAWING	SPEC:	S#	DESCRIPTION	QTY:	DRAWING	SPEC:
1	TRANSFORMER	1		P-13	15	ANTI CLIMBING DEVICE	13M		PD-76
2	P.C POLE / STRUCTURE	1	PDW/DF-10	P-34 P-5	16	P.G CLAMP	12		P-25
3	LIGHTENING ARRESTER	3	DSW/DF 9	P-184	17	D SHACKLE	14		PD-68
4	PIN INSULATOR	4		P-6	18	SPOOL INSULATOR	8		P-4
5	INSULATOR PIN	4		P-24	19	EARTHING ROD WITH CLAMP	1	PDW / DF 237	P-111
6	WOODEN CROSSARM	3	PDW / DF 185	P-1	20	ANGLE IRON 50x50x6x200mm	2	PDW / DF 239	DD-S-46
7	OROPOUT CUTOUT ASSEMBLY	3	PDW / DF 170	P-68	21	TIE WIRE	30M		P-22
8	ANT CONDUCTOR	2M		P-63	22	12 150 L.G	10	PDW / DF 206	P-19
9	G.S STRANDED WIRE 10 Ø	8M/ 12M	FOR STRUCTURE FOR PC POLE	P-12	23	SQARE WASHER 50x50x3	10	PDW / DF 269	P-20
10	CHANNEL 100 x 50 x 2000 mm	2	PDW / DF 238	DD.S-46	24	ANGLE IRON ASSEMBLY 50x360x50x6 - 600	4	CEDD / DDST 108	DD-S-46
11	CHANNEL 100x50x600 mm C600	2	PDW / DF 238	DD.S-46	25	MS BOLT (16mm) ½" X 9"	4	FOR PC POLE	DD-S-10
12	U. BOLT	4	PDW / DF 240	DD.S-46	26	MS BOLT (16mm) ½" X 10"	4	FOR PC POLE	-DO-
13	U. BOLT	4	PDW / DF 218	DD.S-46	27	MS BOLT (16mm) ½" X 16"	2	FOR PC POLE	-DO-
14	GROUND CONDUCTOR CLAMPS	2	PDW / DF 236	P-111					

20 : 50 100 OR 200 KVA DISTRIBUTION TRANSFORMER STATION ON DOUBLE STRUCTURE / P.C POLE DT.5-25

DIGITIZED BY:	ASAD ABBAS	REV

USAID FROM THE AMERICAN PEOPLE	USAID POWER DISTRIBUTION PROGRAM	Drawing No. ES/DD-55L

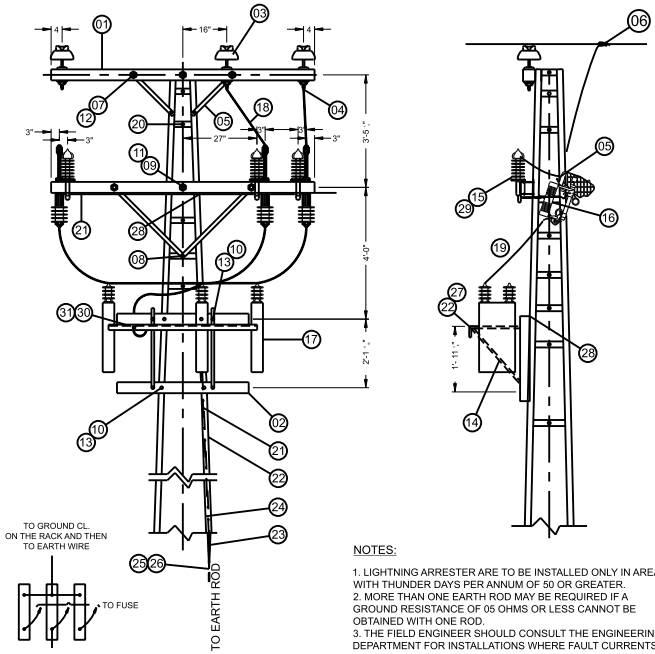

NOTES:

1. LIGHTNING ARRESTER ARE TO BE INSTALLED ONLY IN AREAS WITH THUNDER DAYS PER ANNUM OF 50 OR GREATER.
2. MORE THAN ONE EARTH ROD MAY BE REQUIRED IF A GROUND RESISTANCE OF 05 OHMS OR LESS CANNOT BE OBTAINED WITH ONE ROD.
3. THE FIELD ENGINEER SHOULD CONSULT THE ENGINEERING DEPARTMENT FOR INSTALLATIONS WHERE FAULT CURRENTS MAY EXCEED 5000 AMPS.
4. USE 20 K TYPE FUSE LINK ONLY IN CUTOUT AS SPECIFIED

S#	DESCRIPTION	QTY:	DRAWING	STOCK#	S#	DESCRIPTION	QTY:	DRAWING	STOCK#
1	WOOD CROSSARM 4"x5"x8'-0"	2	EW/DF- 251	T-1173	17	100 KVAR CAPACITOR	3		
2	WOOD CROSSARM 4"x5"x4'-0"	2	EW/DF- 251	T-1173	18	JUMPER WIRE AS REQUIRED	-		
3	11 KV PIN TYPE INSULATOR	3	EW/DF- 252	T-3211	19	INSULATED JUMPER 11kV NON SHIELDED AS PER SPEC. No. P-24	15FT		
4	INSULATOR PN	3	EW/DF- 256	T-3217	20	M.S BOLT 3/8" x 2"	1	EW/DF- 260	S-1297
5	CROSSARM BRACE 1 1/4"x1 1/4"x28"	4	EW/DF- 254	T-1352	21	G.S STRANDED WIRE 10Ø AS PER P-12	48FT		
6	P.G CLAMP TWO BOLT TYPE	6	EW/DF- 271	T-5017	22	J-BOLT CLAMPED FOR 19Ø CONDUIT	3	EW/DF- 298	S-1445
7	M.S BOLT 2/8"x6"	4	EW/DF- 272	S-1265	23	3/4" CONDUIT	10FT		T-7137
8	M.S BOLT 1/2"x2"	2	EW/DF- 286	S-1057	24	J-BOLT CLAMP FOR 19Ø CONDUIT	3	EW/DF- 297	S-1444
9	M.S BOLT 5/8"x14"	2	EW/DF- 260	S-1303	25	GALVANIZED M.S ROD 16Ø 5500 LONG	1	EW/DF- 523	T-1587
10	M.S BOLT 1/2"x6"	8	EW/DF- 286	S-1059	26	EARTH ROD CLAMP FOR 15Ø ROD	1	EW/DF- 323	S-1787
11	SQ. WASHER 2 1/4"x2 1/4"x11/16" HOLE	2	EW/DF- 286	S-1792	27	SINGLE COIL RECTANGULAR SPRING SEEL WASHER	3	EW/DF- 331	T-5001
12	ROUND WASHER 1" DIA 7/16" HOLE	4	EW/DF- 268	S-1791	28	MOUNTING BRACKET FOR 12kV LIGHTENING ARRESTER	3	EW/DF- 332	E-3674
13	ROUND WASHER 1 1/4" DIA 3/16" HOLE	8	EW/DF- 268	S-1791					
14	CAPACITOR RACK (SEE DETAIL)	1	EW/DE- 1	T-1365					
15	11 KV LIGHTENING ARRESTER	3	EW/DF- 232	T-3666					
16	11 kv LOAD BRACKET CUTOUT WITH 20 P-FUSE LINK	3	EW/DF- 215	T-5557					

300 KVAR CAPACITOR BANK ASSEMBLY 55L FOR LATTICE STEEL POLE

DIGITIZED BY:	ASAD ABBAS	REV

USAID
FROM THE AMERICAN PEOPLE

USAID POWER DISTRIBUTION PROGRAM

Drawing No.
ES/DD-56L

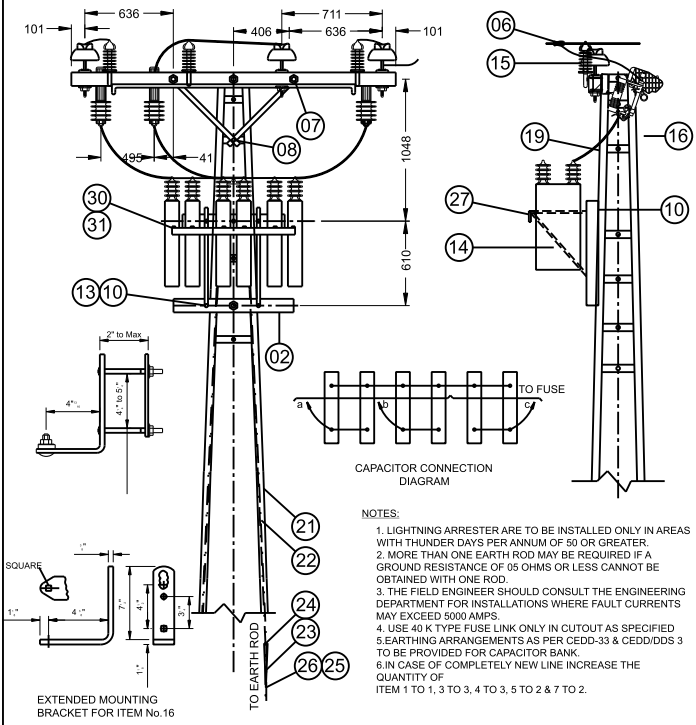

NOTES:

1. LIGHTNING ARRESTER ARE TO BE INSTALLED ONLY IN AREAS WITH THUNDER DAYS PER ANNUM OF 50 OR GREATER.
2. MORE THAN ONE EARTH ROD MAY BE REQUIRED IF A GROUND RESISTANCE OF 05 OHMS OR LESS CANNOT BE OBTAINED WITH ONE ROD.
3. THE FIELD ENGINEER SHOULD CONSULT THE ENGINEERING DEPARTMENT FOR INSTALLATIONS WHERE FAULT CURRENTS MAY EXCEED 5000 AMPS.
4. USE 40 K TYPE FUSE LINK ONLY IN CUTOUT AS SPECIFIED
5.EARTHING ARRANGEMENTS AS PER CEDD-33 & CEDD/DDS 3 TO BE PROVIDED FOR CAPACITOR BANK.
6.IN CASE OF COMPLETELY NEW LINE INCREASE THE QUANTITY OF
ITEM 1 TO 1, 3 TO 3, 4 TO 3, 5 TO 2 & 7 TO 2.

S#	DESCRIPTION	QTY:	DRAWING	STOCK#	S#	DESCRIPTION	QTY:	DRAWING	STOCK#
1	WOOD CROSSARM 101x127x2440	-	EW/DF- 251	T-1173	15	11 KV LIGHTENING ARRESTER	3		
2	WOOD CROSSARM 101x127x1219	2	EW/DF- 251	T-1173	16	11 kv LOAD BRACKET CUTOUT WITH 40 K-FUSE WITH EXTENDED MOUNTING BRACKET	3	EW/DF- 215	E-3557-3501
3	11 KV PIN TYPE INSULATOR	-	EW/DF- 252	T-3211	17	100 KVAR CAPACITOR	6		
4	INSULATOR PIN	-	EW/DF- 256	T-3217	18	GI#47 CONDUCTOR FOR JUMPER AS PER SPEC. P-50.	7M		
5	CROSSARM BRACE 30x6x711	-	EW/DF- 254	T-1352	19	INSULATED JUMPER 11KV NON SHIELDED AS PER SPEC TN- P-24	5M		
6	WOODEN CROSSARM	3	SEE APPLICATION TAB-4		20	M.S BOLT 15x51	1	EW/DF- 260	S-1297
7	M.S BOLT 9x152	-	EW/DF- 272	S-1265	21	G.S STRANDED WIRE 10Ø AS PER P-12	16M		
8	M.S BOLT 13x51	2	EW/DF- 286	S-1059	22	J-BOLT CLAMPED FOR 19Ø CONDUIT	2	EW/DF- 298	S-1445
9	M.S BOLT 15x355	2	EW/DF- 260	S-1303	23	¾" CONDUIT	3¾M		T-7137
10	M.S BOLT 13x152	8	EW/DF- 286	S-1059	24	J-BOLT CLAMP FOR 19Ø CONDUIT	3	EW/DF- 297	S-1444
11	SQUARE WASHER 57x57x30 HOLE	2	EW/DF- 269	S-1792	25	GALVANIZED M.S ROD 16Ø 5500 LONG	1	EW/DF- 523	T-1586
12	ROUND WASHER 25.4 DIA 12 HOLE	4	EW/DF- 268	S-1791	26	EARTH ROD CLAMP FOR 15Ø ROD	1	EW/DF- 323	T-1587
13	ROUND WASHER 30 DIA 14 HOLE	8	EW/DF- 268	S-1791	27	SINGLE COIL RECTANGULAR SPRING SEEL WASHER	3	EW/DF- 331	S-1757
14	CAPACITOR RACK	1	EW/DE- 1	T-1365	28	MOUNTING BRACKET FOR 12KV LIGHTENING ARRESTER	3	EW/DF- 332	E-8674

600 KVAR FIXED CAPACITOR BANK ASSEMBLY FOR LATTICE STEEL POLE

DIGITIZED BY:	ASAD ABBAS	REV

USAID FROM THE AMERICAN PEOPLE	USAID POWER DISTRIBUTION PROGRAM	Drawing No. DSW/DF-32

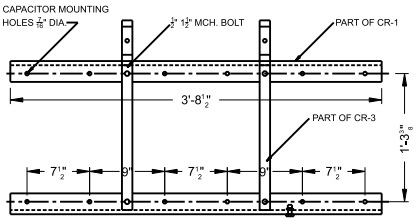

NOTES:

RACK TO BE MOUNTED AND ASSEMBLED WITH 1/2" DIA. BOLTS. ALL ITEMS HOT DIP GALVANIZED A.S.T.M.A.-153.

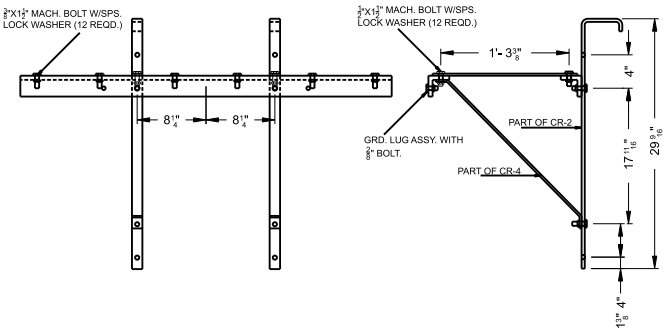

ITEM	QTY	DESCRIPTION	DRG. #	STOCK #
CR-1	02	2 1/2" x 2 1/2" x 1/16" angle iron 44 1/2" long drilled as per detail.	DSW/DF-33	
CR-2	02	1 1/4" x 3/8" flat bar blank length 35 1/16" bent to shape drilled as per detail.	DSW/DF-34	
CR-3	02	1 1/4" x 1/4" flat bar blank length 27" bent to shape drilled as per detail.	DSW/DF-36	
CR-4	02	1 1/4" x 1/4" flat bar 17 1/8" long drilled as per detail.	DSW/DF-35	

CAPACITOR RACK ASSEMBLY FOR CROSSARM MOUNTING

DIGITIZED BY:	ASAD ABBAS	REV

USAID FROM THE AMERICAN PEOPLE	USAID POWER DISTRIBUTION PROGRAM	Drawing No. DSW/DF - 33

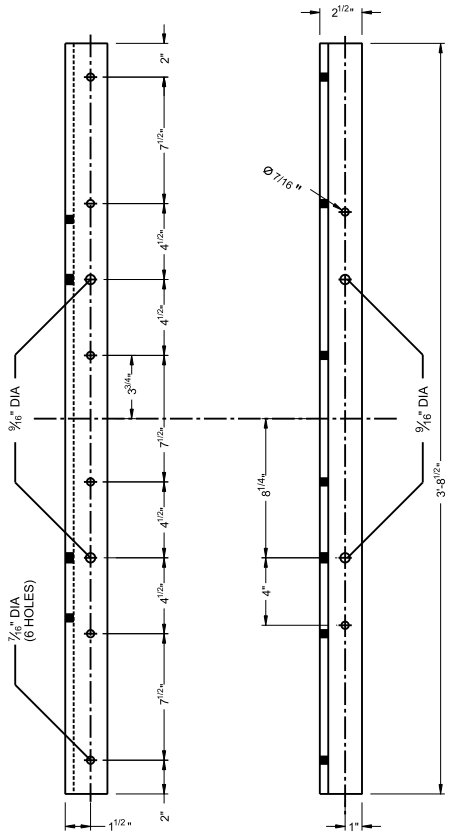

NOTES:

CAPACITORS RACK ASSEMBLY FOR CROSS ARMS MOUNTING SHOWN IN DSW/DF-32.

MATERIAL: $2\frac{1}{2}$"x$2\frac{1}{2}$"x$\frac{3}{16}$" STEEL STRUCTURAL ANGLE.
FINISH: HOT DIP GALVANIZED A.S.T.M.A - 153.

DRILLING DETAIL FOR PART # CR 1 CAPACITOR RACK.

DIGITIZED BY:	ASAD ABBAS	REV:

USAID POWER DISTRIBUTION PROGRAM	Drawing No. DSW/DF - 34

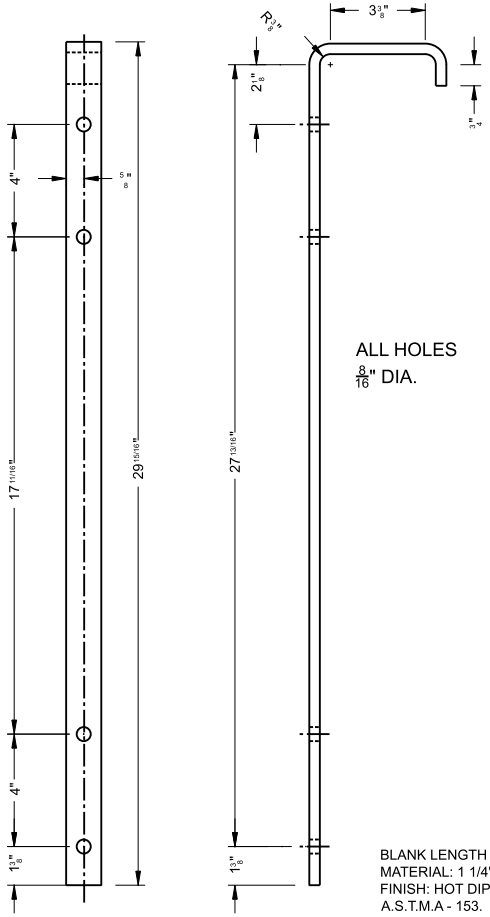

BLANK LENGTH APPROX. 35 1/16"
MATERIAL: 1 1/4" x 3/8" STEEL BAR.
FINISH: HOT DIP GALVANIZED
A.S.T.M.A - 153.

CROSS ARM BRACE FOR PART # CR 2 CAPACITOR RACK

DIGITIZED BY:	ASAD ABBAS	REV

USAID FROM THE AMERICAN PEOPLE	USAID POWER DISTRIBUTION PROGRAM	Drawing No. DSW/DF - 35

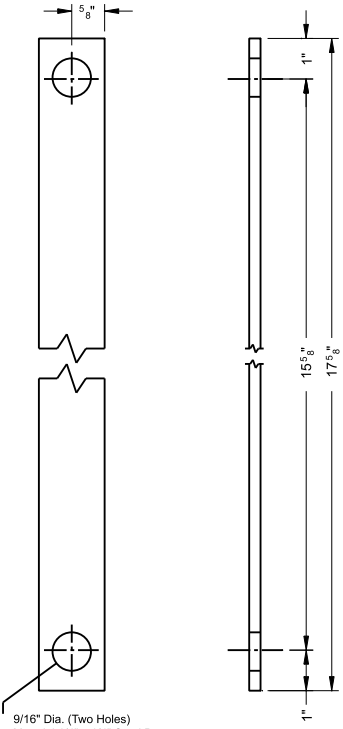

9/16" Dia. (Two Holes)
Material 1/4" x 1/4" Steel Bar
Finish :- Hot B.D Galv. A.S.TM A-193

STEEL BRACE FOR PART No. CR-3 (CAPACITOR RACK)

DIGITIZED BY:	ASAD ABBAS	REV

USAID FROM THE AMERICAN PEOPLE	USAID POWER DISTRIBUTION PROGRAM	Drawing No. DSW/DF - 36

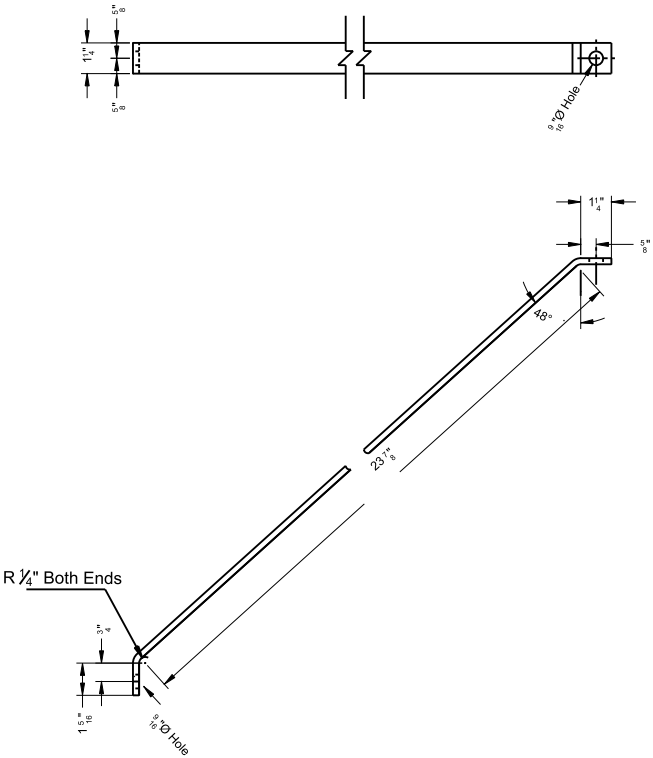

BLANK LENGTH APPROX. = 27"
MATERIAL: 1 1/4" x1/4" STEEL BAR.
FINISH: HOT DIP GALVANIZED A.S.T.M.A - 153.

ANGULAR BRACE FOR PART # CR-4 CAPACITOR RACK

DIGITIZED BY:	ASAD ABBAS	REV

USAID FROM THE AMERICAN PEOPLE	USAID POWER DISTRIBUTION PROGRAM	Drawing No. PDW/DF - 264

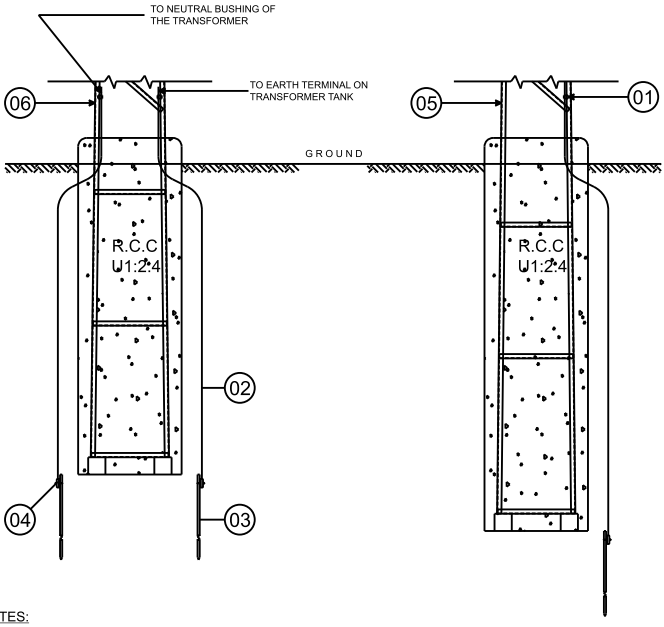

NOTES:

IN CASE OF TRANSFORMER STATION ON TUBULAR POLES ITEM #: 1 SHALL BE AS PER DRG. #: PDW/DF-235 0F P-111

ITEM	DESCRIPTION	SPEC.	DWG. #
01	GROUND COND. CLAMP(S TYPE)	P-111	PDW/DF-236
02	GAL. STEEL WIRE (7/3.2mm - 10mm STRANDS)	P-012	-
03	M.S EARTH ROD	P-111	PDW/DF-237
04	EARTH ROD CLAMP	P-111	PDW/DF-234
05	LATTICE STEEL STRUCTURE (H TYPE)	P-034	PDW/DF-011
06	LATTICE STEEL STRUCTURE (L TYPE)	P-034	PDW/DF-011

EARTH RODS CONFIGURATION FOR DISTRIBUTION TRANSFORMER STATION ON DOUBLE STRUCTURES

DIGITIZED BY:	ASAD ABBAS	REV

USAID FROM THE AMERICAN PEOPLE	USAID POWER DISTRIBUTION PROGRAM	Drawing No. PDW/DF - 263

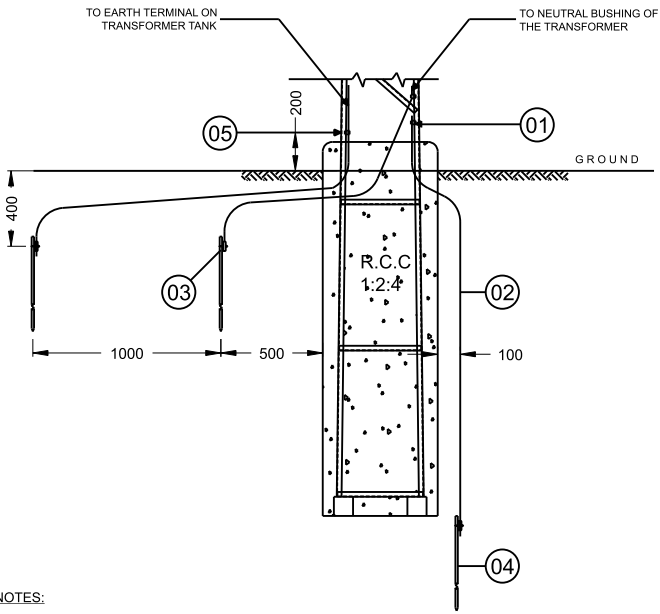

NOTES:

IN CASE OF TRANSFORMER STATION ON TUBULAR POLES ITEM #: 1 SHALL BE AS PER DRG. #: PDW/DF-235 0F P-111

ITEM	DESCRIPTION	SPEC.	DWG. #
01	GROUND COND. CLAMP (S TYPE)	P-111	PDW/DF-236
02	GAL. STEEL WIRE (7/3.2mm-10mm STRANDS)	P-012	-
03	M.S EARTH ROD	P-111	PDW/DF-237
04	EARTH ROD CLAMP	P-111	PDW/DF-234
05	LATTICE STEEL STRUCTURE (H TYPE)	P-034	PDW/DF-011

EARTH RODS CONFIGURATION FOR DISTRIBUTION TRANSFORMER STATION ON SINGLE STRUCTURES

DIGITIZED BY:	ASAD ABBAS	REV

USAID FROM THE AMERICAN PEOPLE	USAID POWER DISTRIBUTION PROGRAM	Drawing No. PDW/DF - 262

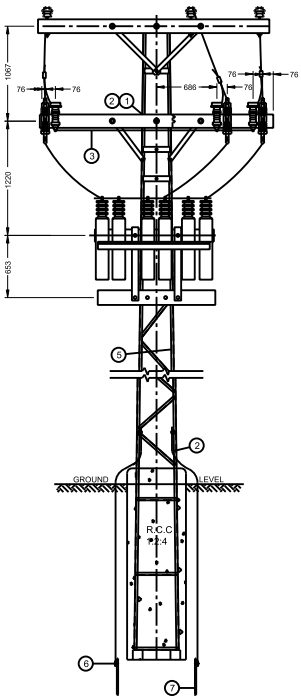

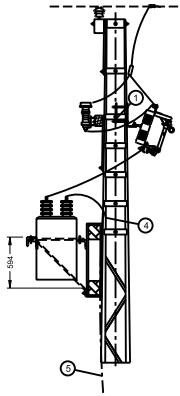

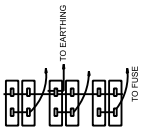

CAPACITOR CONNECTION DIAGRAM

NOTES:

SIMILAR EARTHING ARRANGEMENT SHALL ALSO BE DONE IN CASE OF 300 KVAR CAPACITOR BANK.

ITEM	DESCRIPTION	SPEC.	DWG. #
01	12 Ø, 37 LONG M.S BOLT	P-19	EW/DF-286
02	M.S ROUND WASHER 14 Ø HOLE	P-20	EW/DF-268
03	GNAT CONDUCTOR	P-63	-
04	GROUND CONDUCTOR CLAMPS(S)	P-111	PDW/DF-236
05	G.S STRANDED WIRE 10 Ø	P-12	-
06	EARTH ROD CLAMP(R)	P-111	PDW/DF-234
07	EARTH ROD	P-111	PDW/DF-237

EARTH RODS CONFIGURATION FOR DISTRIBUTION TRANSFORMER STATION ON SINGLE STRUCTURES

DIGITIZED BY:	ASAD ABBAS	REV

USAID POWER DISTRIBUTION PROGRAM	Drawing No. PDW/DF - 247

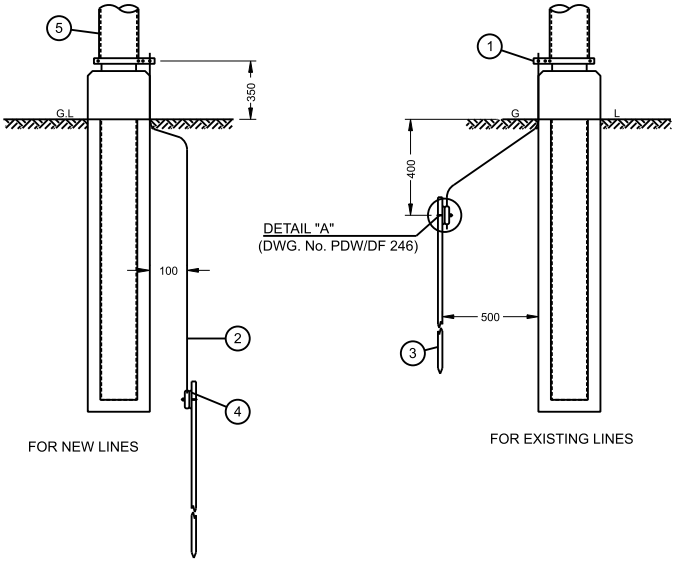

NOTES:

GROUND CONDUCTOR CLAMP PL & PH TYPE ARE USED FOR L & H TYPE TUBULAR POLES IRRESPECTIVELY.

ITEM	DESCRIPTION	SPEC.	DWG. #
01	GROUND COND. CLAMP. (PL & PH TYPE)	P-111	PDW/DF-235
02	GAL. STEEL WIRE (7/3.2mm - 10mm STRAND)	P-012	-------
03	M.S EARTH ROD	P-111	PDW/DF-237
04	EARTH ROD CLAMP (R TYPE)	P-111	PDW/DF-234
05	TUBULAR POLE (L & H TYPE)	P-094	PDW/DF-153

EARTHING ARRANGEMENTS FOR L.T & H.T TUBULAR POLES

DIGITIZED BY:	ASAD ABBAS	REV

USAID FROM THE AMERICAN PEOPLE	USAID POWER DISTRIBUTION PROGRAM	Drawing No. PDW/DF - 246

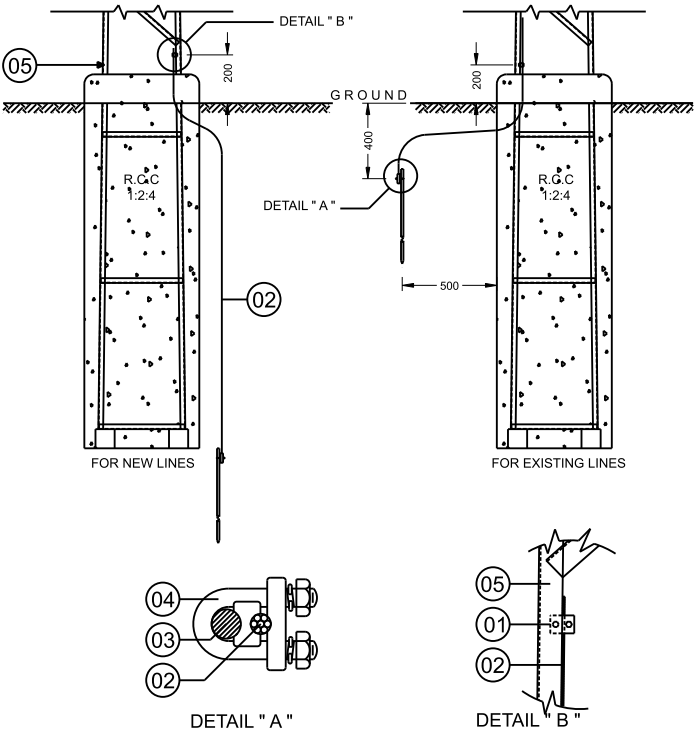

ITEM	DESCRIPTION	SPEC.	DWG. #
01	GROUND COND. CLAMP (S TYPE)	P-111	PDW/DF-236
02	GAL. STEEL WIRE (7/3.2mm - 10mm STRANDS)	P-012	-
03	M.S EARTH ROD	P-111	PDW/DF-237
04	EARTH ROD CLAMP (R TYPE)	P-111	PDW/DF-234
05	LATTICE STEEL STRUCTURE (L & H TYPE)	P-034	PDW/DF-10,11

EARTH ARRANGEMENT FOR LT. & HT. LATTICE STEEL STRUCTURES

DIGITIZED BY:	ASAD ABBAS	REV

USAID FROM THE AMERICAN PEOPLE	USAID POWER DISTRIBUTION PROGRAM	Drawing No. PDW/DF-11

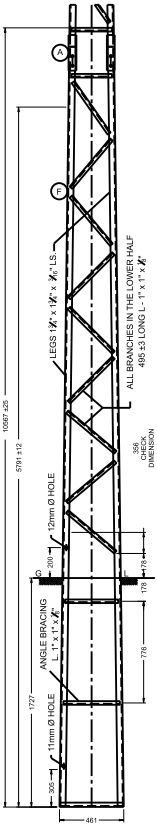

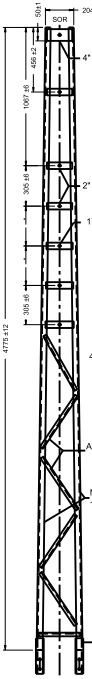

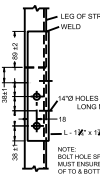

DETAIL AT M

DETAIL AT B

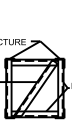

DETAIL AT N

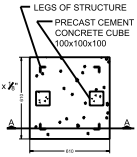

FOUNDATION PLAN

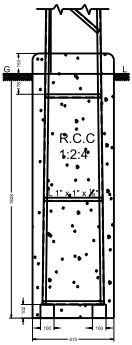

SECTION ON A-A

ALL DIMENSION IN MILLIMETERS EXCEPT WHERE STATED OTHER WISE.

NOTES:

MATERIAL:- MILD STEEL TO ASTM A-36 OR BS 13

BOLTS: TO ASTM A-394
STRUCTURE TO BE MANUFACTURED AND TESTED IN ACCORDANCE WITH WAPDA SPEC P-34.
STRUCTURE DIMS:- TAKEN FROM EW/DF-290

TYPE H 35 Ft. 600 LBS LATTICE STEEL STRUCTURE

DIGITIZED BY:	ASAD ABBAS	REV : GW/DF-40

USAID FROM THE AMERICAN PEOPLE	USAID POWER DISTRIBUTION PROGRAM	Drawing No. PDW/DF -10

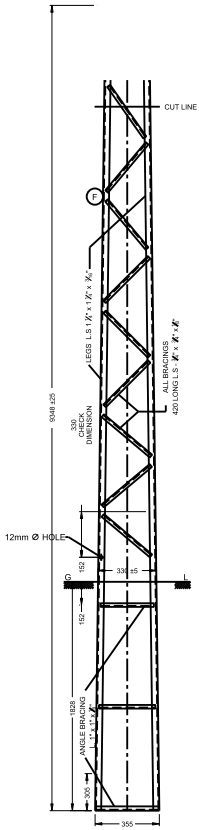

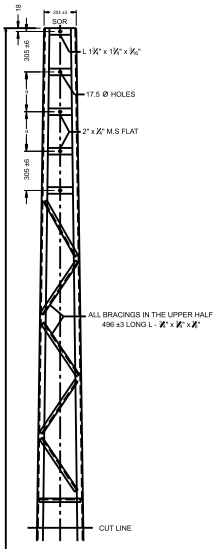

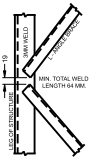

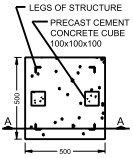

FOUNDATION PLAN

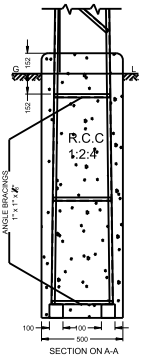

SECTION ON A-A

ALL DIMENSION IN MILLIMETERS EXCEPT WHERE STATED OTHER WISE.

NOTES:

MATERIAL:- MILD STEEL TO ASTM A-36 OR BS 13

BOLTS: TO ASTM A-394
STRUCTURE TO BE MANUFACTURED AND TESTED IN ACCORDANCE WITH WAPDA SPEC P-34.
STRUCTURE DIMS:- TAKEN FROM EW/DF-290

TYPE L 31 FT. 300 LBS LATTICE STEEL STRUCTURE

DIGITIZED BY:	ASAD ABBAS	REV: GW/DF-44

USAID FROM THE AMERICAN PEOPLE	USAID POWER DISTRIBUTION PROGRAM	Drawing No. CE/DD - 2

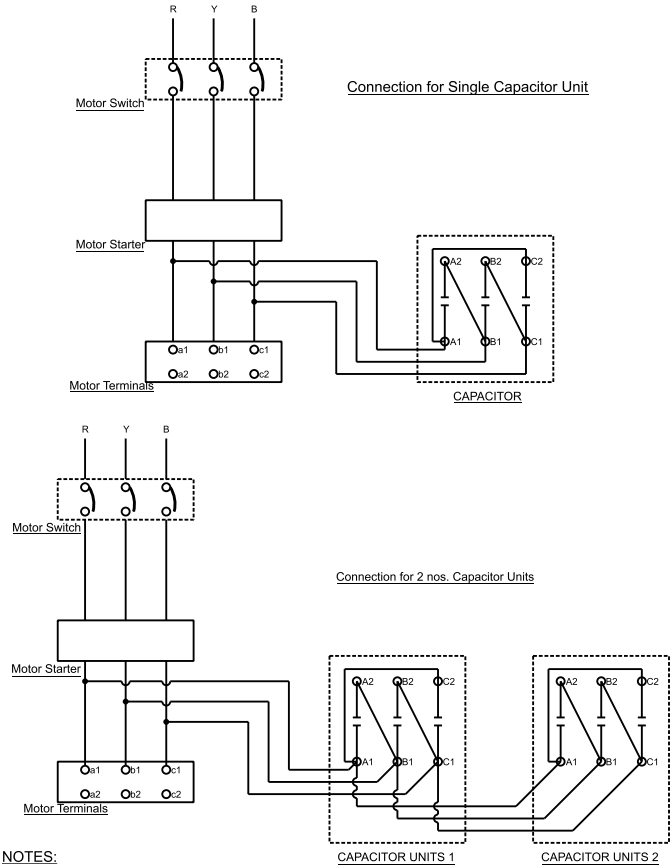

NOTES:

1. Use 7/0.036 insulated PVC single core cable for capacitor connection.
2. Earth terminal on the body of the capacitor should be connected to consumers earth.

L.T. Capacitor Connection Diagram

DIGITIZED BY:	ASAD ABBAS	REV

USAID FROM THE AMERICAN PEOPLE	USAID POWER DISTRIBUTION PROGRAM	Drawing No. CE/DD-1

UCAPACITOR INSTALLATION RACK

[ISOMETRIC VIEW]

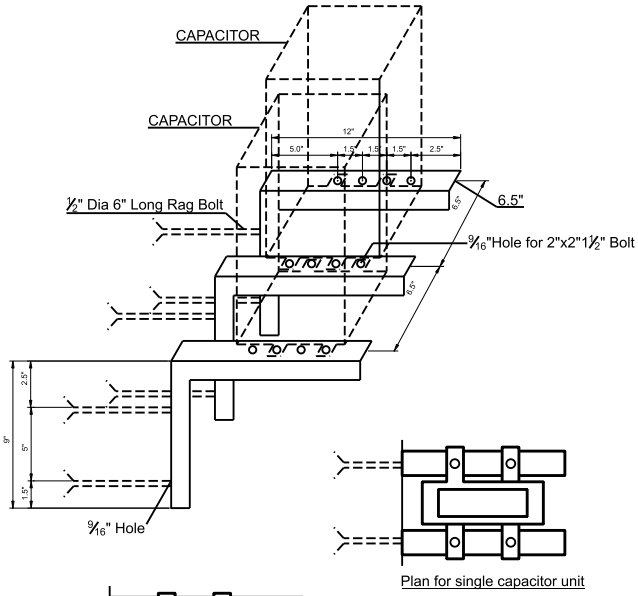

Plan for single capacitor unit

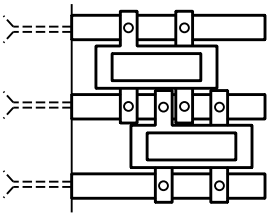

Plan for double capacitor unit

NOTES:

1. Use 2 angle iron pieces for single capacitor unit.
2. Use 3 angle iron pieces for double capacitor unit.

LT CAPACITOR INSTALLATION RACK

DIGITIZED BY:	ASAD ABBAS	REV

USAID POWER DISTRIBUTION PROGRAM	Drawing No. EW/DM - 14

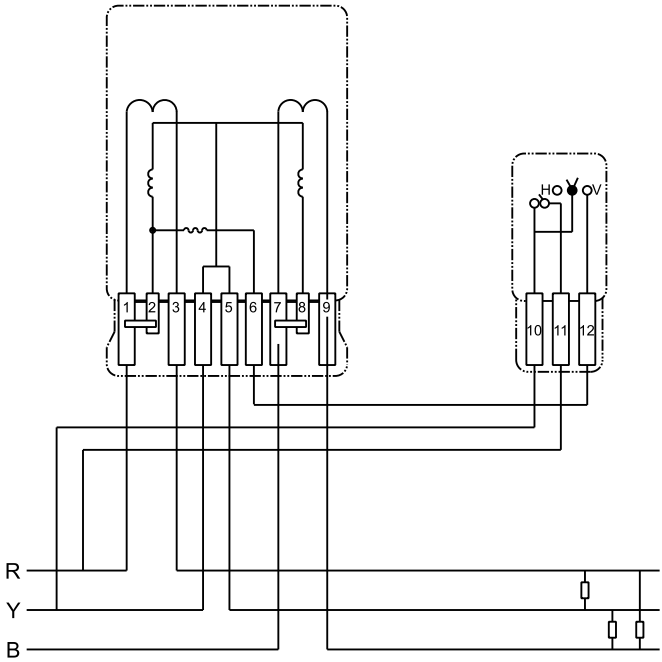

NOTE:

THIS IS 3 PHASE 3 WIRE
400 DOUBLE TARIFF METER
FOR BALANCE LOAD ONLY
(NOT IN USE AT PRESENT)

METER CONNECTION ARRANGEMENT 3 PHASE 3 WIRE 400 VOLTS

DIGITIZED BY:	ASAD ABBAS	REV

USAID FROM THE AMERICAN PEOPLE	USAID POWER DISTRIBUTION PROGRAM	Drawing No. EW/DM - 13

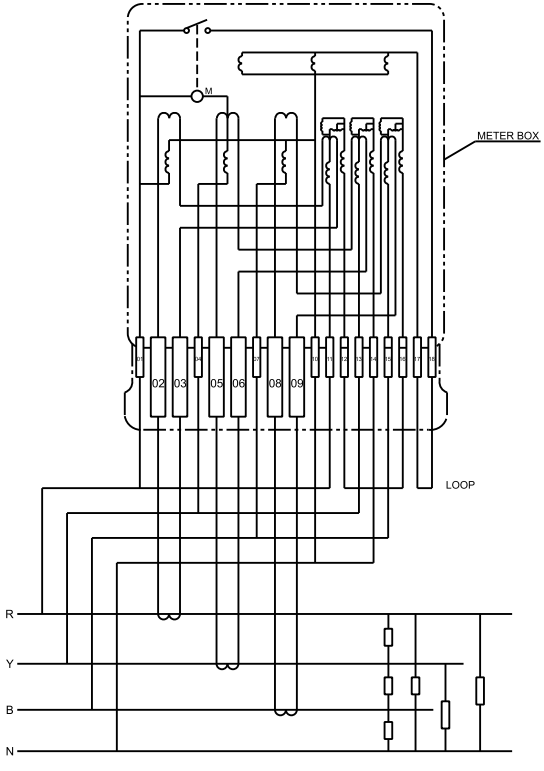

NOTE:

THE KWh AND MDI RECORD ENERGY CONSUMPTION AND MAXIMUM DEMAND. THE KVAh KILO VOLTS-AMPS-HOURS AND KVARh REGISTER THE RE-ACTIVE ENERGY

Meter Connection Arrangement: 3 Phase 4 Wire C.T. Operated Trivector Meter

DIGITIZED BY:	ASAD ABBAS	REV

USAID FROM THE AMERICAN PEOPLE	USAID POWER DISTRIBUTION PROGRAM	Drawing No. EW/DM - 12

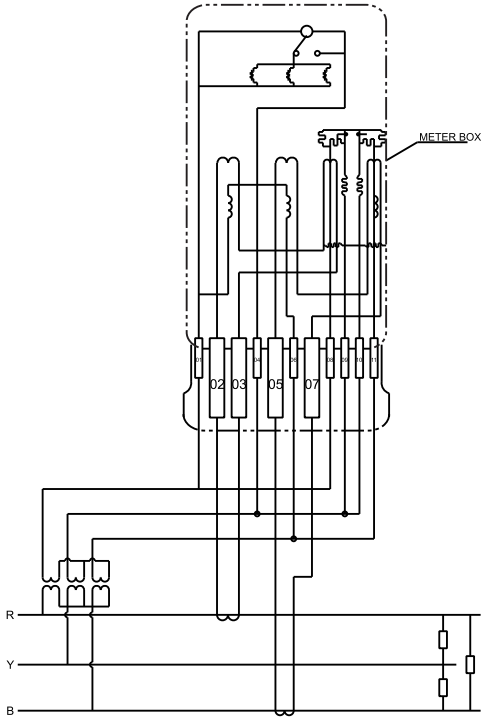

NOTE:

kWh - kVAh and kVARh METERS ARE BUILT IN ONE CASE.
THIS METER IS USED FOR METERING THE ENERGY WHERE VOLTAGE IS OVER 400 VOLTS.
REMOVE FUSES ON SECONDARY SIDE OF P.T.

Meter Connection Arrangement: L & G 3 Phase 3 Wire C.TS. C.TS. & P.T Operated Trivector Meter

DIGITIZED BY:	ASAD ABBAS	REV

USAID FROM THE AMERICAN PEOPLE	USAID POWER DISTRIBUTION PROGRAM	Drawing No. EW/DM - 11

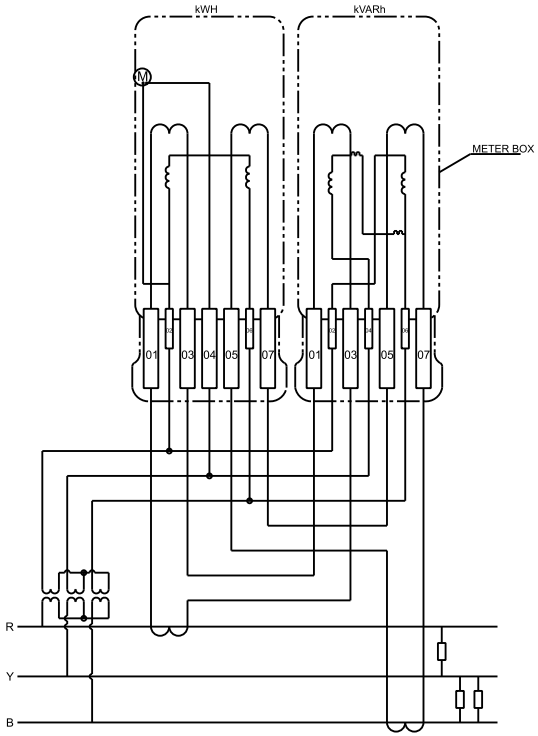

NOTE:-

POWER FACTOR: $\frac{-KWH}{\sqrt{(KWH^2)+(KVARH2)}}$

USE FOR BALANCE LOAD ONLY.

Meter Connection Arrangement:
L & G 3 Phase 3 Wire C.T. & P.T. Operated Meter with KWH kVAR & MDI (KW)

DIGITIZED BY:	ASAD ABBAS	REV

USAID FROM THE AMERICAN PEOPLE	USAID POWER DISTRIBUTION PROGRAM	Drawing No. EW/DM - 10

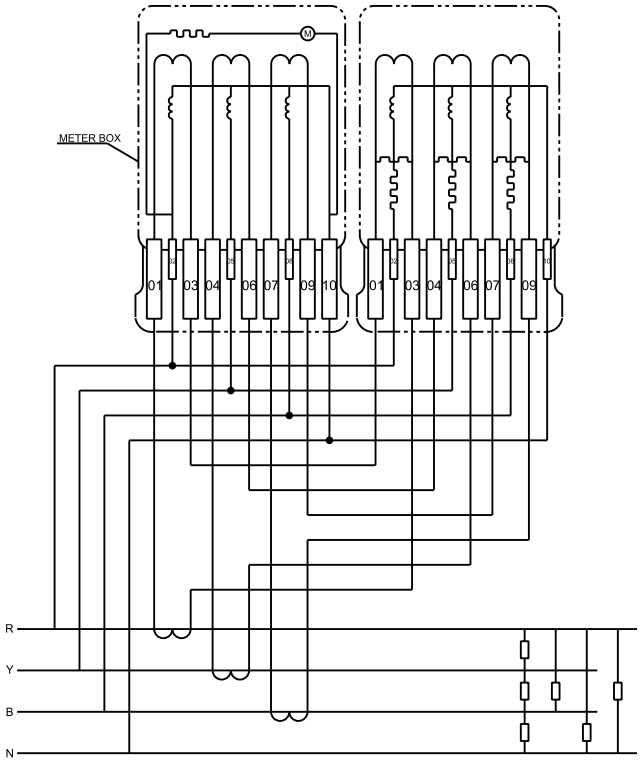

NOTE:-

THIS MAY BE USED FOR RECORDING CONSUMPTION OF INDUSTRIAL AND LIGHT LOAD

Meter Connection Arrangement: AEG 3 Phase 3 Wire 230/400 Volts
C.T. Operated Meter with KWH KVARh & MDI (KW)

DIGITIZED BY:	ASAD ABBAS	REV

USAID FROM THE AMERICAN PEOPLE	USAID POWER DISTRIBUTION PROGRAM	Drawing No. EW/DM - 9

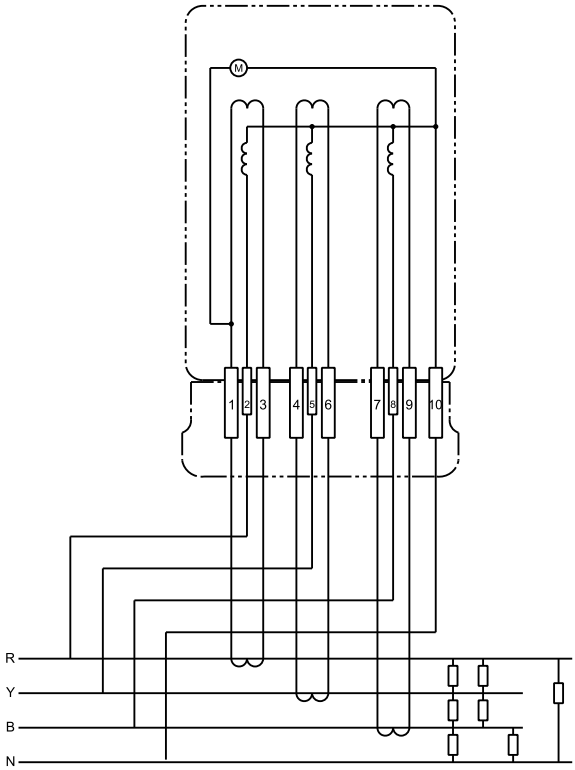

FIG4. 3PHASE 4_WIRE METER WITH CURRENT TRANSFORMERS

Meter Connection Arrangement: 3 Phase 3 Wire 400 Volts Chamberlain-Hookham Combination C.T. Operated Meter

DIGITIZED BY:	ASAD ABBAS	REV

USAID FROM THE AMERICAN PEOPLE	USAID POWER DISTRIBUTION PROGRAM	Drawing No. EW/DM - 8

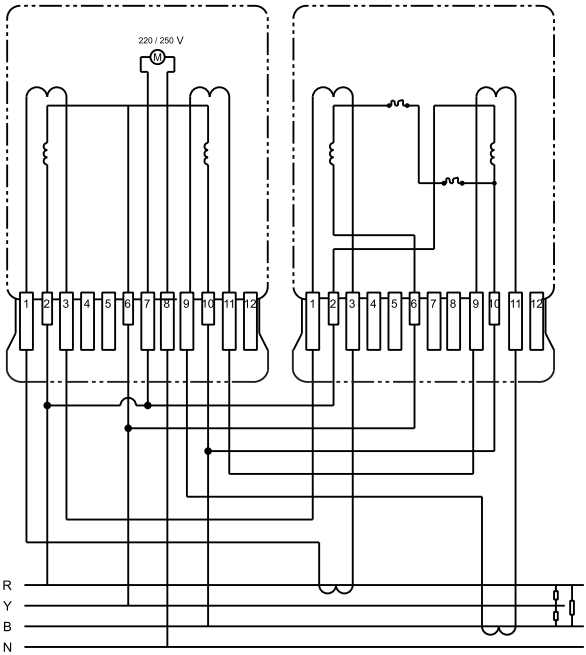

METER CONNECTIONS ARRANGEMENT L&G 3 PHASE 3 WIRE 400 VOLTS
C.T. OPERATED METER WITH KWH, KVARh AND MDI(KW)

DIGITIZED BY:	ASAD ABBAS	REV

USAID FROM THE AMERICAN PEOPLE	USAID POWER DISTRIBUTION PROGRAM	Drawing No. EW/DM - 7

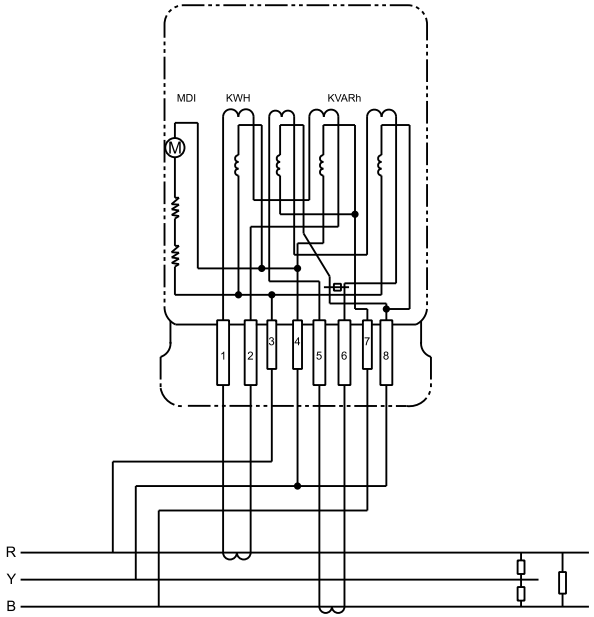

Meter Connections Arrangement: 3 Phase 3 wire 400 volts chamberlain - Hookham combination C.T Operated Meter with KWH, KVARh & MDI (KW

DIGITIZED BY:	ASAD ABBAS	REV

USAID FROM THE AMERICAN PEOPLE	USAID POWER DISTRIBUTION PROGRAM	Drawing No. EW/DM - 6

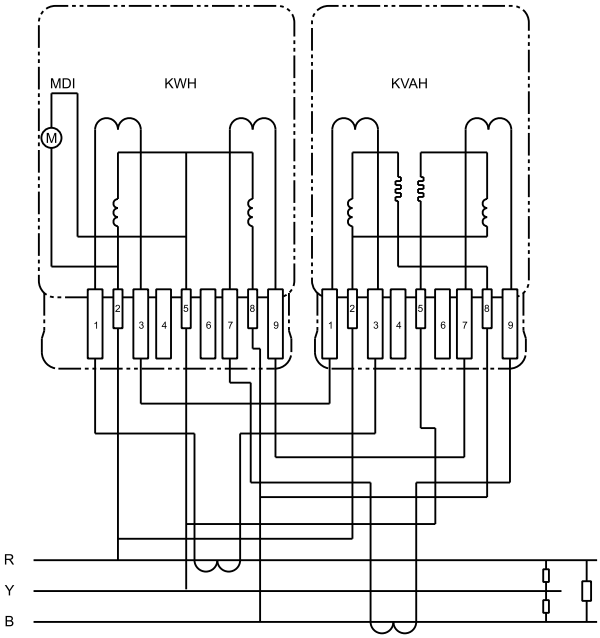

Meter Connection Arrangement: AEG 3 Phase 3 Wire 400 Volts
C.T. Operated Meter with KWH, KVAH and MDI(KW)

DIGITIZED BY:	ASAD ABBAS	REV

USAID FROM THE AMERICAN PEOPLE	USAID POWER DISTRIBUTION PROGRAM	Drawing No. EW/DM - 5

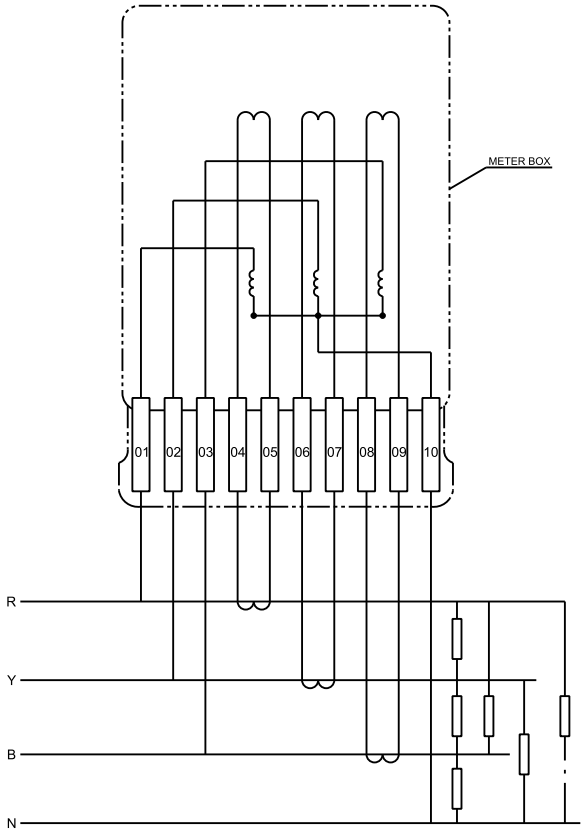

Meter Connection Arrangement: L&K, 3 Phase, 4 wire 230/400 V KWH
C.T operated meter without MDI

DIGITIZED BY:	ASAD ABBAS	REV

USAID FROM THE AMERICAN PEOPLE	USAID POWER DISTRIBUTION PROGRAM	Drawing No. EW/DM - 4

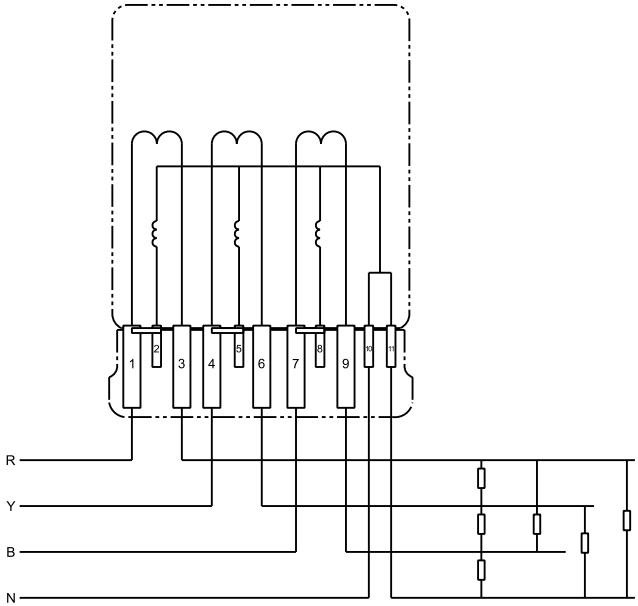

Connection for a three element meter usedon a 3 phase 4 wire system

DIGITIZED BY:	ASAD ABBAS	REV

USAID FROM THE AMERICAN PEOPLE	USAID POWER DISTRIBUTION PROGRAM	Drawing No. EW/DM - 3

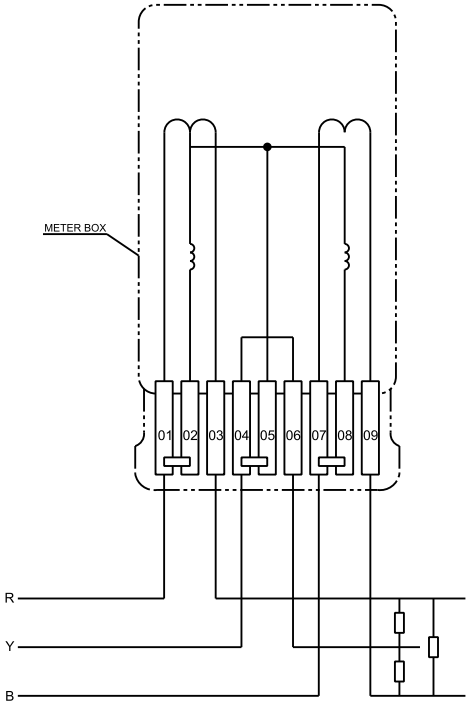

NOTE:

THIS METER IS ONLY MEANT FOR BALANCED 3 PHASE LOAD. THE SINGLE PHASE LOAD CONNECTED TO THE YELLOW PHASE WILL NOT BE RECORDED.

Meter Connection Arrangement:3 Phase 3 Wire 400 Volts Direct Meter

DIGITIZED BY:	ASAD ABBAS	REV

USAID FROM THE AMERICAN PEOPLE	USAID POWER DISTRIBUTION PROGRAM	Drawing No. EW/DM - 2

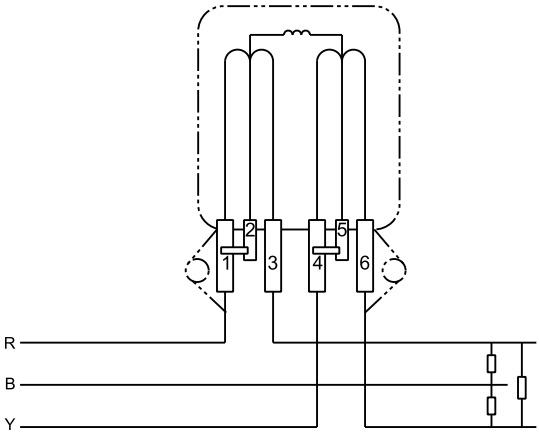

NOTE:- IT IS ONLY MEANT FOR BALANCED 3 PHASE LOAD.

METER CONNECTIONS ARRANGEMENT AEG 3PHASE 3WIRE 400 VOLTS BALANCED LOAD METER

DIGITIZED BY:	ASAD ABBAS	REV

USAID FROM THE AMERICAN PEOPLE	USAID POWER DISTRIBUTION PROGRAM	Drawing No. EW/DM - 1

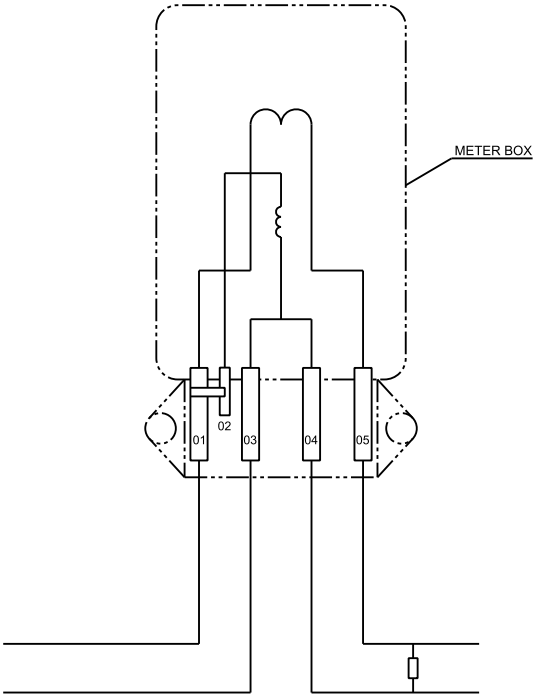

Meter Connection Arrangement: Single Phase Meter

DIGITIZED BY:	ASAD ABBAS	REV

USAID FROM THE AMERICAN PEOPLE	USAID POWER DISTRIBUTION PROGRAM	Drawing No. GW/DF-12

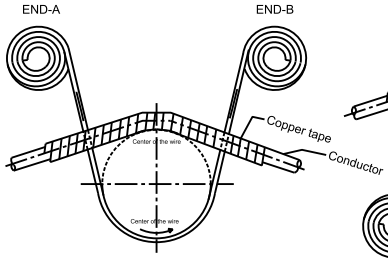

FIG.1

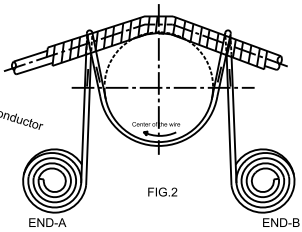

FIG.2

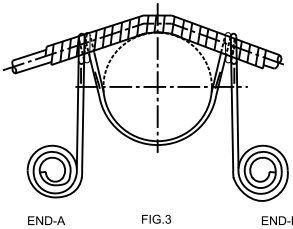

FIG.3

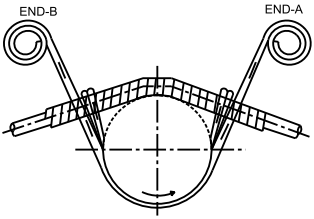

FIG.4

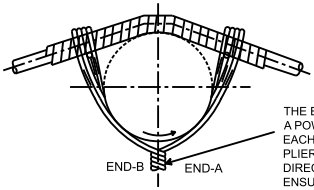

FIG.5

THE ENDS ARE TO BE TWISTED WITH A POWER OF PLIERS AND AFTER EACH HALF TURN OF THE PLIER THE PLIER SHOULD BE PULLED IN THE DIRECTION OF THE ARROW TO ENSURE PROPER TIGHTENING OF THE TIE MINIMUM FOUR TURNS SHOULD BE GIVEN FOR PROPER TIGHTENING.

PIG TAIL TIE FOR ANGLE CONDUCTOR ON PIN INSULATOR

DIGITIZED BY:	ASAD ABBAS	REV

USAID FROM THE AMERICAN PEOPLE	USAID POWER DISTRIBUTION PROGRAM	Drawing No. GW/DF-11

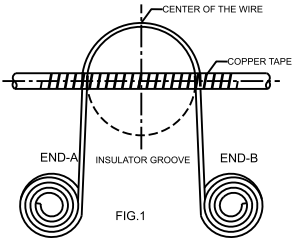

FIG.1

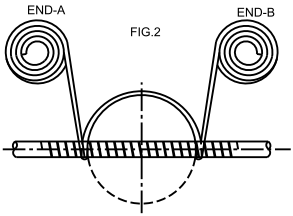

FIG.2

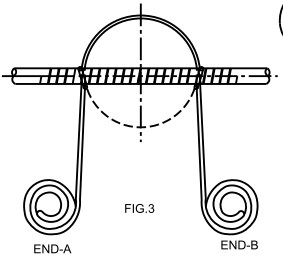

FIG.3

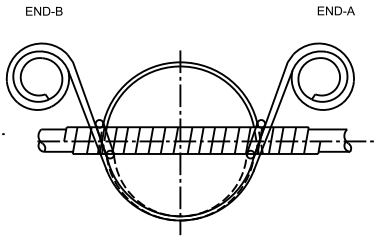

FIG.4

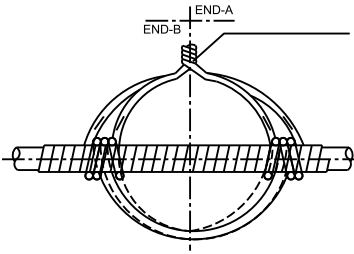

FIG.5

THE ENDS ARE TO BE TWISTED WITH A POWER OF PLIERS AND AFTER EACH HALF TURN OF THE PLIER THE PLIER SHOULD BE PULLED IN THE DIRECTION OF THE ARROW TO ENSURE PROPER TIGHTENING OF THE TIE MINIMUM FOUR TURNS SHOULD BE GIVEN FOR PROPER TIGHTENING.

PIG TAIL TIE FOR STRAIGHT LINE PIN INSULATOR

DIGITIZED BY:	ASAD ABBAS	REV

USAID FROM THE AMERICAN PEOPLE	USAID POWER DISTRIBUTION PROGRAM	Drawing No. DSW/DF-60

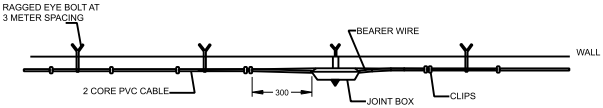

NOTE:-

CORRECT 19/.025 TO READ AS 19/.052 . THE JOINT BOX IS MEANT FOR ALUMINIUM PVC CABLES AND IS SUITBALE FOR BOTH THE SIZES 1/.52 AND 19/.052 2 CORE CABLES. THE JOINT BOX HAS BEEN PROVIDED WITH STEPPED OUT LETS SO WHEN 19/.052 CABLE IS TO BE USED THE FIRST STEP OF THE OUTLET SHALL BE CUT OFF FOR PROPER ENTRY OF THE CABLE. FOR MAKING TEMPORARY DISCONNECTION OF CONSUMERS THE CONNECTORS IN THE JOINT BOX SHOULD BE REMOVED. USE THE JOINT BOX FOR TAPING SINGLE PHASE SERVICES FROM THE EXISTING CABLES. THE SIDE OPENINGS WILL BE USED FOR MAIN CABIN AND THE TEE OFF SHOULD BE TAKEN FROM THE LOWER OPENING. BEFORE CONNECTING THE CABLE REMOVE PVC INSULATION AND APPLY OXIDE INHIBITING COMPOUND AFTER BRUSHING THE CONDUCTOR. PROVIDE PVC ADHESIVE TAPE AT BOTH THE SIDE OPENINGS TO PREVENT ENTRY OF WATER AND MOISTURE.

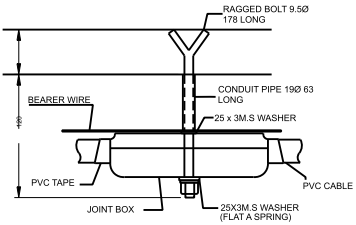

MOUNTING DETAIL

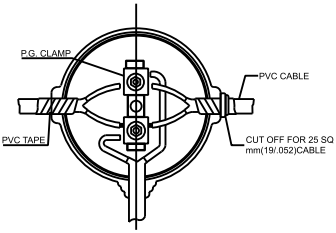

CONNECTION OF CONDUCTORS

INSULATION OF PVC JOINT BOX FOR TWIN CORE L.T. CABLE

DIGITIZED BY:	ASAD ABBAS	REV

USAID FROM THE AMERICAN PEOPLE	USAID POWER DISTRIBUTION PROGRAM	Drawing No. GW/DF-1

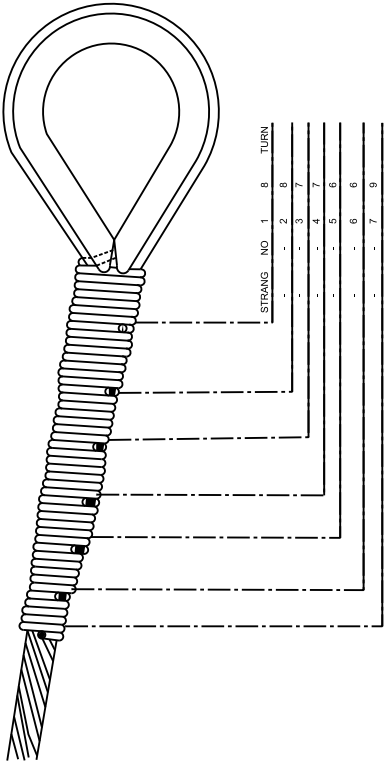

DETAIL SHOWING THE NOZZLING OF STAY WIRES ON TO AN ORDINARY THIMBLE

DIGITIZED BY:	ASAD ABBAS	REV

USAID FROM THE AMERICAN PEOPLE	USAID POWER DISTRIBUTION PROGRAM	Drawing No. PDW/DF-72

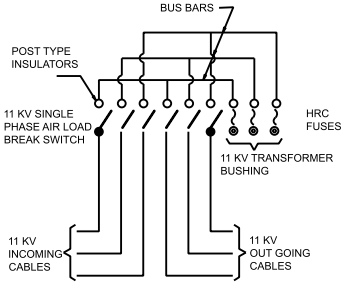

H.T. COMPARMENT

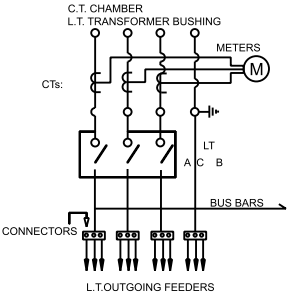

L.T. COMPARMENT

ALTERNATIVE-I

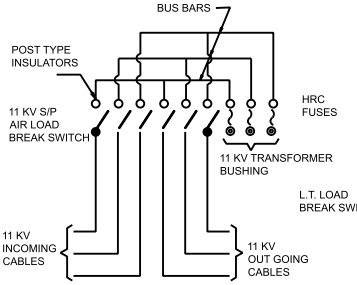

H.T. COMPARMENT

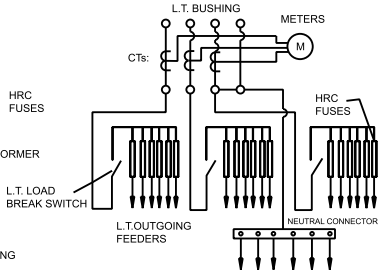

L.T. COMPARMENT

ALTERNATIVE-II

PICTORIAL REPRESENTATION OF 3 PHASE PADMOUNTED TRANSFORMER

DIGITIZED BY:	ASAD ABBAS	REV

USAID FROM THE AMERICAN PEOPLE	USAID POWER DISTRIBUTION PROGRAM	Drawing No. PDW/DF-71

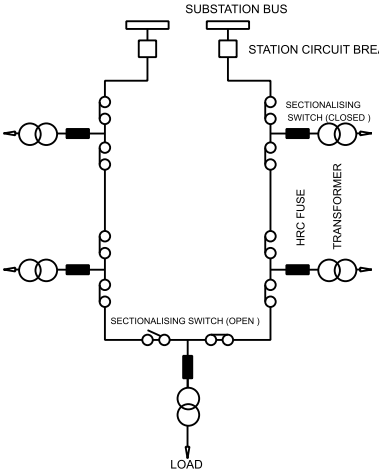

OPEN LOOP SYSTEM

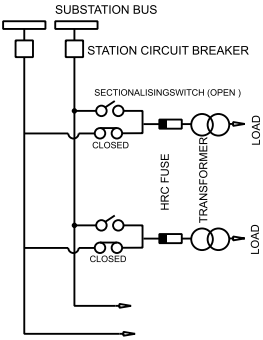

DOUBLE SUPPLY SYSYTEM

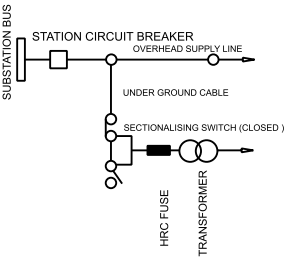

OVERHEAD SUPPLY SYSYTEM

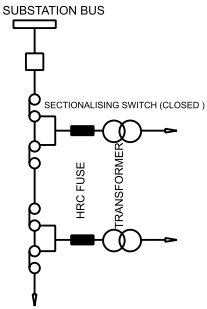

RADIAL SYSTEM (UNDER GROUND)

POWER SUPPLY SYSTEMS

DIGITIZED BY:	ASAD ABBAS	REV

USAID
FROM THE AMERICAN PEOPLE

USAID POWER
DISTRIBUTION PROGRAM

Drawing No.

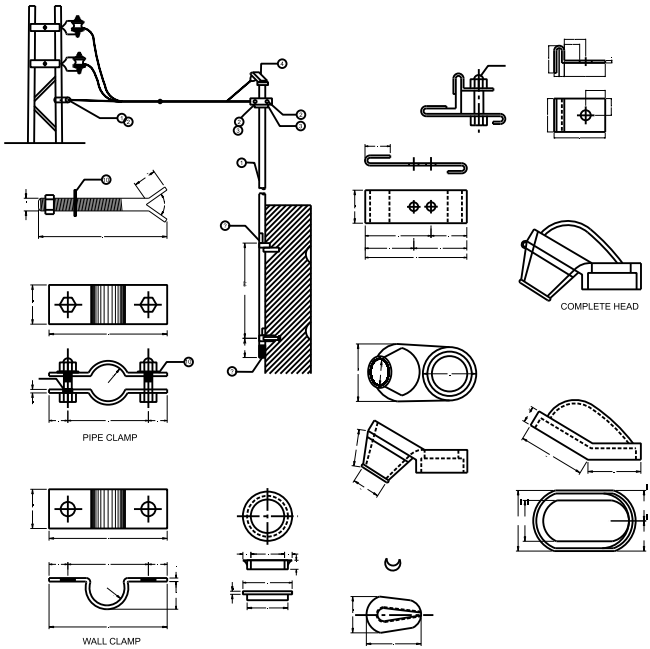

ITEM	DESCRIPTION	QTY.	MATERIAL
01	POLE CLAMP	01	MILD STEEL
02	THIMBLE	02	MILD STEEL
03	PIPE CLAMP	01	MILD STEEL
04	SERVICE HEAD	01	MILD STEEL
05	COLLAR	01	MILD STEEL
06	WALL CLAMP		
07	NUT BOLT	04	MILD STEEL
08	M.S. BOLT		
09			
10	SPRING WASHER		

SINGLE PHASE SERVICE MAST

DIGITIZED BY:	ASAD ABBAS	REV

USAID
FROM THE AMERICAN PEOPLE

USAID POWER
DISTRIBUTION PROGRAM

Drawing No.

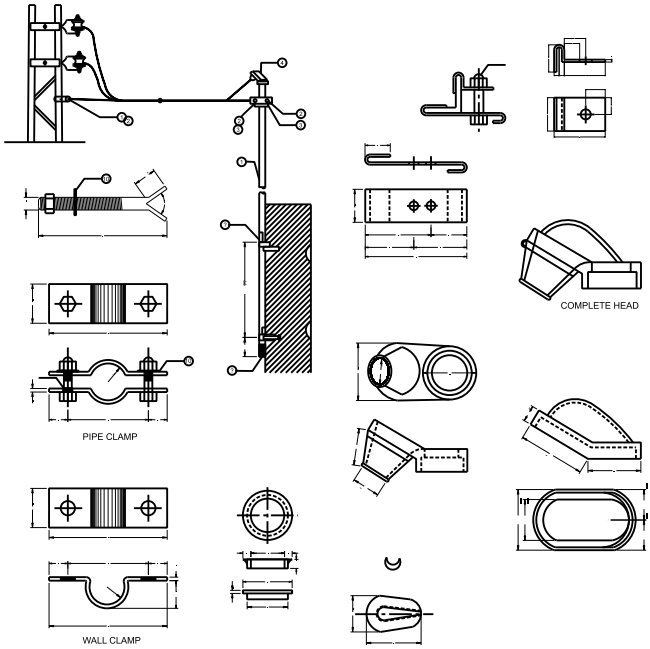

ITEM	DESCRIPTION	QTY.	MATERIAL
01	POLE CLAMP	01	MILD STEEL
02	THIMBLE	02	MILD STEEL
03	PIPE CLAMP	01	MILD STEEL
04	SERVICE HEAD	01	MILD STEEL
05	COLLAR	01	MILD STEEL
06	WALL CLAMP		
07	NUT BOLT	04	MILD STEEL
08	M.S. BOLT		
09			
10	SPRING WASHER		

THREE PHASE SERVICE MAST

DIGITIZED BY:	ASAD ABBAS	REV

USAID FROM THE AMERICAN PEOPLE	USAID POWER DISTRIBUTION PROGRAM	Drawing No. CE DE/DDST-233

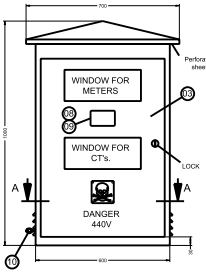

FRONT VIEW

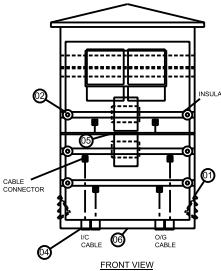

FRONT VIEW
DOOR REMOVED

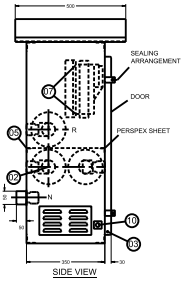

SIDE VIEW

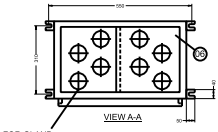

VIEW A-A

FOR GLAND SEE TABLE

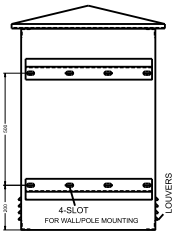

REAR VIEW

NOTES:

A - M.S SHEET THICKNESS 1.6 mm (16 SWG) FOR HOUSING & 2.3mm (14 SWG) FOR FRONT DOOR
B - ALL BUSBARS & NEUTRAL TIN PLATED
C - FINISH TEXTURED LIGHT BEIGE
D - PAINT THICKNESS 0.12mm
E - CLEARANCE PHASE TO PHASE 50mm
PHASE TO EARTH 25mm

TABLE

CT's RATIO	PHASES	NEUTRAL	GLAND
100 / 5A	CU.1 (25x5)	CU.1 (25x5)	8xGP - 21
200 / 5A	CU. 2 (25x5)	CU.1 (25x5)	8xGP - 21
400 / 5A	CU. 2 (25x5)	CU.1 (25x5)	8xGP - 55
800 / 5A	CU. 2 (30x5)	CU.1 (30x5)	AS REQD.

LEGENDS:

1 - BOTTOM AIR VENT FOR SECURITY BOX ACC. TO DRG No. CE.DE/DDST-234
2 - INSULATOR ACC. TO DRG. No. CE DE/DDST - 235/02
3 - ASSY. OF FRONT DOOR ACC. TO DRG. No. CE DE/DDST-236.
4 - G.P GLAND ACC. TO DRG. No. CE DE/DDST-237.
5 - ASSY. OF C.T's SUPPORT ACC. TO DRG. No. CE DE/DDST-238.
6 - ASSY. OF BOTTOM SHEET ACC. TO DRG. No. CE DE/DDST-239.
7 - METER SUPPORT ACC. TO DRG. No. CE DE/DDST-240/01,02
8 - RATING PLATE ACC. TO DRG. No. CE DE/DDST-241
9 - CIRCUIT DIAGRAM ACC. TO DRG. No. CE DE/DDST-242(INSIDE DOOR)
10-EARTHING TERMINAL ACC. TO DRG. No. CE DE/DDST-243.

METER SECURITY BOX TYPE 'A'

DIGITIZED BY:	ASAD ABBAS	REV

USAID FROM THE AMERICAN PEOPLE	USAID POWER DISTRIBUTION PROGRAM	Drawing No. CE DE/DDST-242

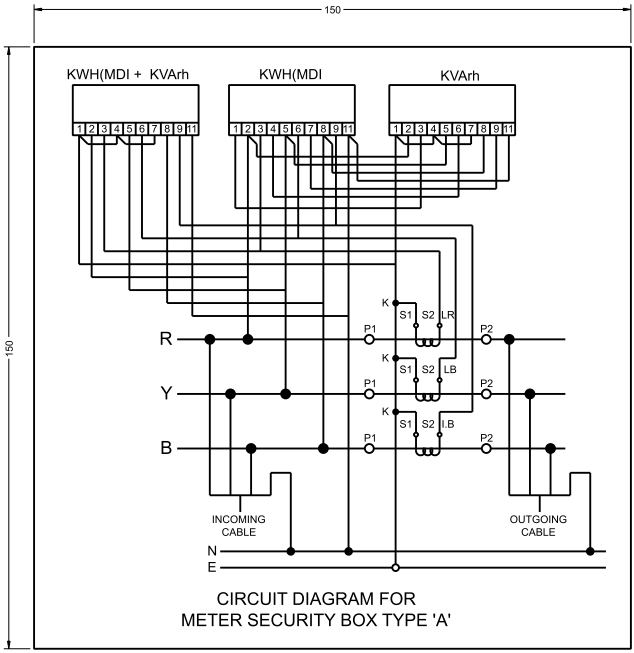

CIRCUIT DIAGRAM FOR
METER SECURITY BOX TYPE 'A'

CIRCUIT DIAGRAM		
DIGITIZED BY:	ASAD ABBAS	REV

USAID FROM THE AMERICAN PEOPLE	USAID POWER DISTRIBUTION PROGRAM	Drawing No. CE.DE/DDST/119

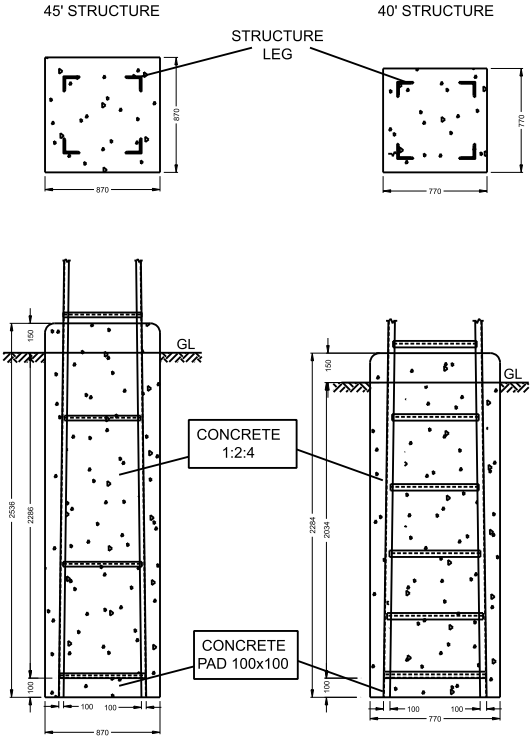

NOTE:-
THE STRUCTURE SHOULD BE IN THE CENTER OF CONCRETE.

FOUNDATION FOR 40 & 45 FT STEEL STRUCTURE

DIGITIZED BY:	ASAD ABBAS	REV

USAID FROM THE AMERICAN PEOPLE	USAID POWER DISTRIBUTION PROGRAM	Drawing No. PDW/DF-260

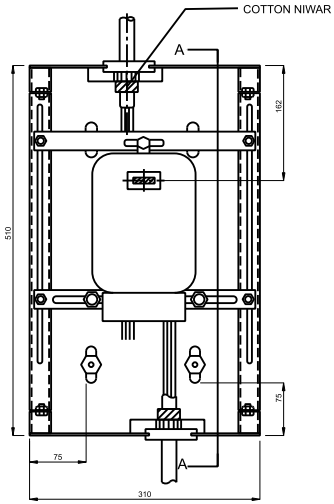

ELEVATION

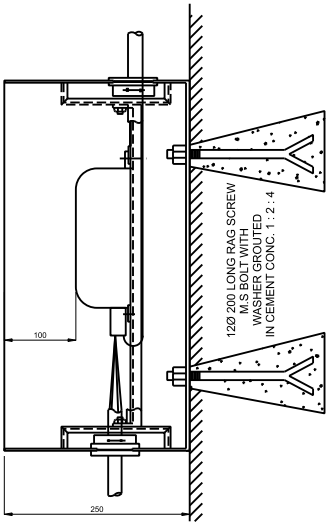

SECTION-AA

NOTE: FRONT COVER NOT SHOWN FOR CLARIFICATION.

INSTALLATION OF TYPE 'B' METER BOX

DIGITIZED BY:	ASAD ABBAS	REV

USAID FROM THE AMERICAN PEOPLE	USAID POWER DISTRIBUTION PROGRAM	Drawing No. PDW/DF-261

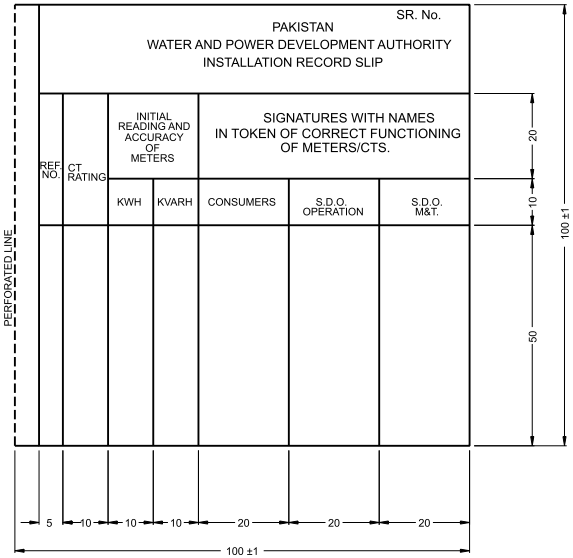

MATERIAL :-
EQUIVALENT OR BETTER THAN LEDGER PAPER OF 80 GSM.

INSTALLATION OF RECORD SLIP FOR SECURITY METER BOXES

DIGITIZED BY:	ASAD ABBAS	REV

USAID FROM THE AMERICAN PEOPLE	USAID POWER DISTRIBUTION PROGRAM	Drawing No. EW/DF-263

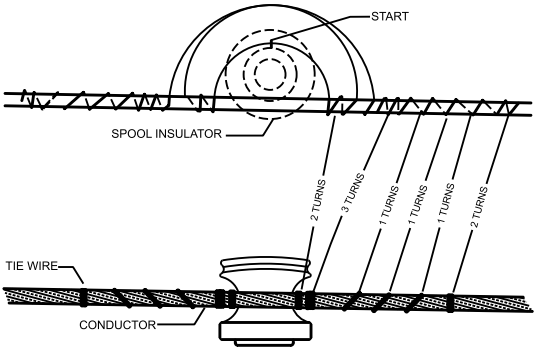

NOTES:-

1. STARTING POINT FOR MAKING TIES IS MIDDLE OF LENGTH OF THE TIE WIRE.
2. MAKE TIE AS SNUG AND TIGHT AS POSSIBLE.
3. THE WIRE ENDS SHOULD NOT BE LEFT PROTRUDING BUT SHOULD BE FINISHED TIGHTLY ON THE CONDUCTOR.
4. USED OR SALVAGED TIE WIRE SHOULD NOT BE RE-USED.
5. TIE WIRE MATERIAL - ALL ALUMINIUM ANNEALED 4mm. DIA.

CONDUCTOR	LENGTH
WASP	7 FT
ANT	6 FT
GNAT	5 FT

THE WIRE APPLICATION GUIDE FOR L.T. INSULATOR

DIGITIZED BY:	ASAD ABBAS	REV

USAID FROM THE AMERICAN PEOPLE	USAID POWER DISTRIBUTION PROGRAM	Drawing No. EW/DF-264

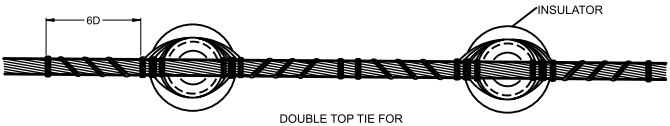

DOUBLE TOP TIE FOR
STRAIGHT LINE POSITION

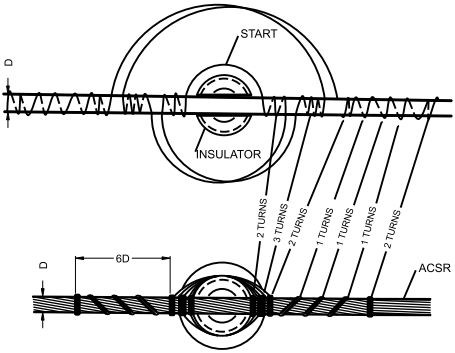

SINGLE TOP TIE FOR
STRAIGHT LINE POSITION

NOTES:-

1. STARTING POINT FOR MAKING TIES IS MIDDLE OF LENGTH OF TIE WIRE.
2. AVOID TIE WIRE CROSSOVER IN NECK OF INSULATOR.
3. MAKE TIE AS SNUG AND TIGHT AS POSSIBLE.
4. TIE WIRE ENDS SHOULD NOT BE LEFT PROTRUDING BUT SHOULD BE FINISHED TIGHTLY ON THE CONDUCTOR.
5. USED OR SAVAGED TIE WIRE SHOULD NOT BE RE-USED.
6. TIE WIRE MATERIAL - ALL ALUMINUM ANNEALED 4mm DIA.

CONDUCTOR	LENGTH
GOPHER	6 FT
RABBIT	7 FT
DOG	8FT

TIE WIRE APPLICATION GUIDE FOR TOP TIES ON 11KV PIN INSULATOR

DIGITIZED BY:	ASAD ABBAS	REV

USAID FROM THE AMERICAN PEOPLE	USAID POWER DISTRIBUTION PROGRAM	Drawing No. EW/DF-265

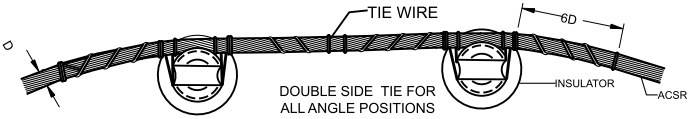

DOUBLE SIDE TIE FOR
ALL ANGLE POSITIONS

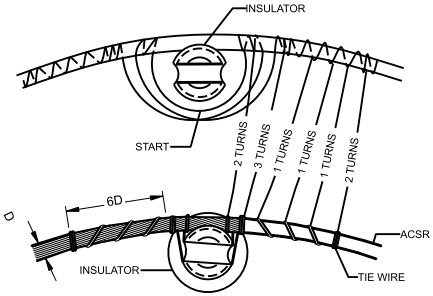

SINGLE SIDE TIE FOR
ALL ANGLE POSITIONS

NOTES:-

1. STARTING POINT FOR MAKING TIES IS MIDDLE OF LENGTH OF THE TIE WIRE.
2. AVOID TIE WIRE CROSSOVER IN NECK OF INSULATOR.
3. MAKE TIE AS SNUG AND TIGHT AS POSSIBLE.
4. TIE WIRE ENDS SHOULD NOT BE LEFT PROTRUDING BUT SHOULD BE FINISHED TIGHTLY ON THE CONDUCTOR.
5. USED OR SAVAGED TIE WIRE SHOULD NOT BE RE-USED.
6. TIE WIRE MATERIAL - ALL ALUMINUM ANNEALED 4mm DIA.

CONDUCTOR	LENGTH
GOPHER	5 FT
RABBIT	6 FT
DOG	7 FT

TIE WIRE APPLICATION GUIDE FOR SIDE TIES ON 11KV PIN INSULATORS

DIGITIZED BY:	ASAD ABBAS	REV

USAID FROM THE AMERICAN PEOPLE	USAID POWER DISTRIBUTION PROGRAM	Drawing No. PDW/DF-290

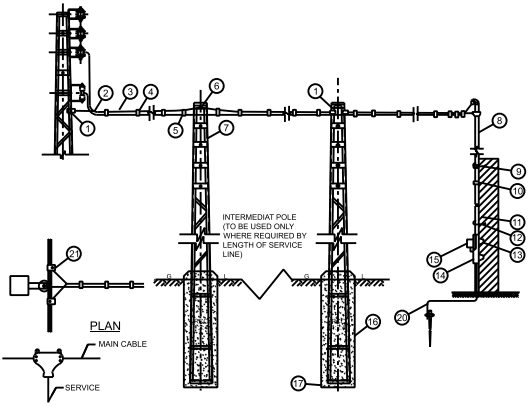

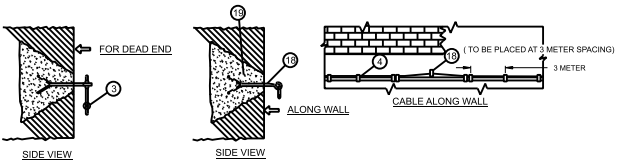

NOTES:

1. SERVICE CABLE MUST BE IN ONE PIECE AND UNDAMAGED UP TO METER TERMINAL.
2. PORTION OF CABLE BETWEEN SERVICE MAST AND METER MUST BE IN METAL CONDUIT PROPERLY CONNECTED BY SLEEVES.
3. EARTHING ACCORDING TO DETAIL "A" OF DRAWING NO. PDW/DF-246 EARTH WIRE GROUTED IN GROOVE CUT IN WALL AND CONNECTED TO METER EARTH TERMINAL.

ITEM	DESCRIPTION	REMARKS	ITEM	DESCRIPTION	REMARKS
01	POLE CLAMP WITH THIMBLE		12	HOOKS	
02	TIE WIRE	SPEC. P-22	13	WOODEN GATTIES	
03	BEARER WIRE	SPEC. P-12	14	METER BOARD	PD-100a
04	CLIPS		15	1 PHASE METER	SPEC. P-2
05	2 CORE L.T CABLE	PD-27	16	FOUNDATION FOR STRUCTURE	
06	EYE SCREW BOLT 16 X 50mm		17	PAD	
07	LATTICE STEEL STRUCTURE 9.4m	SPEC. P-34	18	EYE RAG BOLTS 16 X 250mm	
08	SERVICE MAST PIPE	SDI-55	19	CONCRETE	
09	WALL CLAMP	SDI-55	20	EARTHING ARRANGEMENT	SDI-59 NOTE 3
10	RAG BOLT	SDI-55	21	P.G. CONNECTOR	SPEC. P-25
11	METAL CONDUIT PIPE 37mm DIA				

SINGLE PHASE CABLE SERVICE

DIGITIZED BY:	ASAD ABBAS	REV

USAID FROM THE AMERICAN PEOPLE	USAID POWER DISTRIBUTION PROGRAM	Drawing No. PDW/DF-289

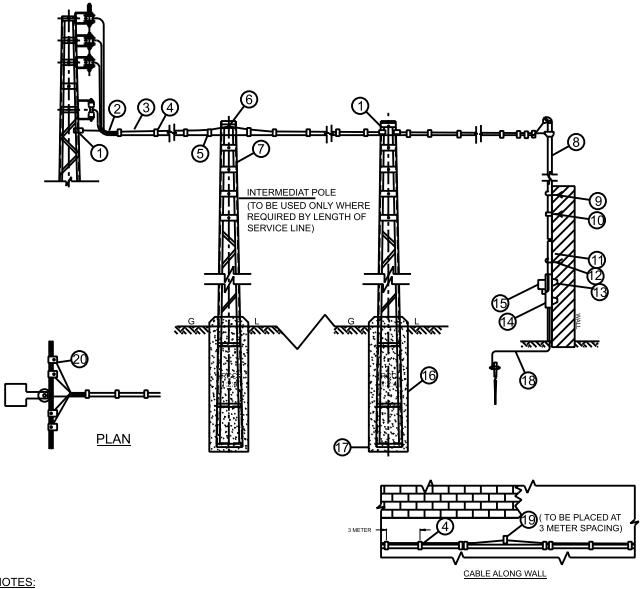

NOTES:

1. SERVICE CABLE MUST BE IN ONE PIECE AND UNDAMAGED UP TO METER TERMINAL.
2. PORTION OF CABLE BETWEEN SERVICE MAST AND METER MUST BE IN METAL CONDUIT PROPERLY CONNECTED BY SLEEVES.
3. EARTHING ACCORDING TO DETAIL “A” OF DRAWING NO. PDW/DF-246 EARTH WIRE GROUTED IN GROOVE CUT IN WALL AND CONNECTED TO METER EARTH TERMINAL.

ITEM	DESCRIPTION	REMARKS	ITEM	DESCRIPTION	REMARKS
01	POLE CLAMP WITH THIMBLE		12	HOOKS	
02	TIE WIRE	SPEC. P-22	13	WOODEN GATTIES	
03	BEARER WIRE	SPEC. P-12	14	METER BOARD	PD-100a
04	CLIPS		15	3 PHASE 4 WIRE METER	SPEC. P-9
05	4 CORE L.T CABLE	PD-280	16	FOUNDATION FOR STRUCTURE	
06	EYE SCREW BOLT 16 X 50mm		17	PAD	
07	LATTICE STEEL STRUCTURE 9.4m	SPEC. P-34	18	EARTHING ARRANGEMENT	SDI-59 NOTE 3
08	SERVICE MAST PIPE	SDI-55	19	EYE RAG BOLTS	
09	WALL CLAMP	SDI-55	20	P.G. CONNECTOR	SPEC. P-25
10	RAG BOLT	SDI-55			
11	METAL CONDUIT PIPE 50mm DIA				

THREE PHASE CABLE SERVICE

DIGITIZED BY:	ASAD ABBAS	REV

USAID FROM THE AMERICAN PEOPLE	USAID POWER DISTRIBUTION PROGRAM	Drawing No. PDW/DF-288

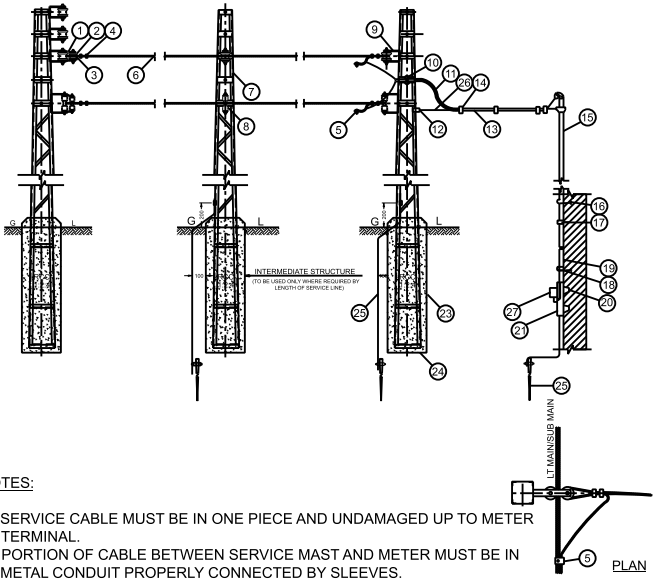

NOTES:

1. SERVICE CABLE MUST BE IN ONE PIECE AND UNDAMAGED UP TO METER TERMINAL.
2. PORTION OF CABLE BETWEEN SERVICE MAST AND METER MUST BE IN METAL CONDUIT PROPERLY CONNECTED BY SLEEVES.
3. EARTHING ACCORDING TO DETAIL "A" OF DRAWING NO. PDW/DF-2460 EARTH WIRE GROUTED IN GROOVE CUT IN WALL AND CONNECTED TO METER EARTH TERMINAL.

ITEM	DESCRIPTION	REMARKS	ITEM	DESCRIPTION	REMARKS
01	D SHACKLE EXTENSION PIECE		14	CLIPS	
02	SHACKLE INSULATOR	SPEC P-4	15	SINGLE PHASE SERVICE MAST PIPE	SDI-55
03	TIE WIRE	SPEC P-22	16	WALL CLAMP	SDI-55
04	LOOP DEAD END CLAMP	PD 111a	17	RAG BOLT	SDI-55
05	P.G CONNECTOR	SPEC P-25	18	HOOKS	
06	BARE ALUMINUM CONDUCTOR	SDI-13a	19	METAL CONDUIT PIPE 37mm DIA	
07	LATTICE STEEL STRUCTURE 9.4m	SPEC P-34	20	WOODEN GATTIES	
08	ALUMINUM REEL WITH BOLT	SPEC P-113	21	METER BOARD	PD - 100a
09	D SHACKLE		22	SINGLE PHASE METER	SPEC-P2
10	EYE SCREW BOLT 16x50MM TIE WIRE		23	FOUNDATION FOR STRUCTURE	
11	2 CORE L.T CABLE	PD - 27	24	PAD	
12	POLE CLAMP WITH THIMBLE		25	EARTHING ARRANGMENTS	SDI-59 NOTE 3
13	BEARER WIRE	SPEC P-12	26	TIE WIRE	SDI-41

THREE PHASE BARE CONDUCTOR SERVICE

DIGITIZED BY:	ASAD ABBAS	REV

USAID
FROM THE AMERICAN PEOPLE

USAID POWER DISTRIBUTION PROGRAM

Drawing No.
PDW/DF-287

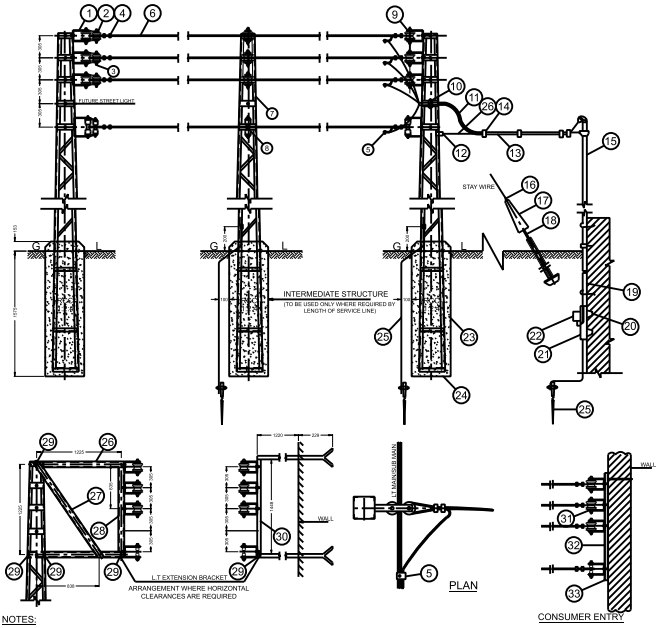

NOTES:

1. SERVICE CABLE MUST BE IN ONE PIECE AND UNDAMAGED UP TO METER TERMINAL.
2. PORTION OF CABLE BETWEEN SERVICE MAST AND METER MUST BE IN METAL CONDUIT PROPERLY CONNECTED BY SLEEVES.
3. EARTHING ACCORDING TO DETAIL "A" OF DRAWING NO. PDW/DF-2460 EARTH WIRE GROUTED IN GROOVE CUT IN WALL AND CONNECTED TO METER EARTH TERMINAL.

ITEM	DESCRIPTION	REMARKS	ITEM	DESCRIPTION	REMARKS
01	D SHACKLE EXTENSION PIECE		18	STAY ROD	
02	SHACKLE INSULATOR	SPEC P-4	19	METAL CONDUIT PIPE 50mm DIA	
03	TIE WIRE	SPEC P-22	20	WOODEN GATTIES	
04	LOOP DEAD END CLAMP	PD 111a	21	METER BOARD	PD - 1009
05	P.G CONNECTOR	SPEC P-25	22	3 PHASE 4WIRE MTER	SPEC P- 9
06	BARE ALUMINUM CONDUCTOR	SDI-13a	23	FOUNDATION STRUCTURE	
07	LATTICE STEEL STRUCTURE	SPEC P-34	24	POLE	
08	ALUMINUM REEL WITH BOLT	SPEC P-113	25	EARTHING ARRANGMENTS	SDI-59 NOTE3
09	D SHACKLE		26	CHANNEL 101x41x1320 mm Long	SPEC P-2
10	EYE SCREW BOLT 16x50MM TIE WIRE		27	ANGLE IRON BRACE 51x51x6.3x1525 Long	
11	4 CORE L.T CABLE	PD - 28a	28	CHANNEL 101x41x1270 mm Long	
12	POLE CLAMP WITH THIMBLE		29	NUTS AND BOLTS WITH WASHER	
13	BEARER WIRE	SPEC P-12	30	ANGLE IRON 63x63x8x1448mm Long	
14	CLIPS		31	ANGLE IRON 63x63x8x1450mm Long	
15	3" SERVICE MAST PIPE	SDI-55	32	ANGLE IRON 63x63x8x1448mm Long	
16	THIMBLE	SDI-22	33	NUTS AND BOLTS WITH WASHER	
17	ELBOW	SPEC P-1074	34	TIE WIRE	SDI - 41

THREE PHASE BARE CONDUCTOR SERVICE

DIGITIZED BY:	ASAD ABBAS	REV

USAID FROM THE AMERICAN PEOPLE	USAID POWER DISTRIBUTION PROGRAM	Drawing No.

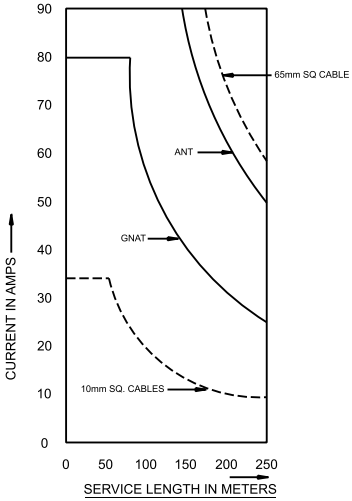

THREE PHASE SERVICES

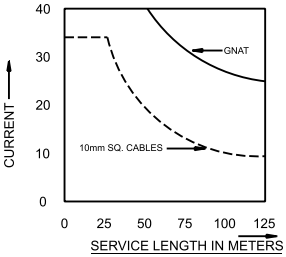

SINGLE PHASE SERVICES

NOTES:

FOR SELECTING APPROPRIATE CABLE OR CONDUCTOR

1. READ ACTUAL SERVICE LENGTH AGAINST LOAD CURRENT CONSIDERED.
2. IF POINT LIES ON A CURVE SELECT THE SIZE OF CABLE OF BARE CONDUCTOR AS REQUIRED .
3. IF POINT DOES NOT FALL ON CURVE SELECT NEAREST HIGHER SIZE.

CABLE SELECTION CHART

DIGITIZED BY:	ASAD ABBAS	REV

USAID FROM THE AMERICAN PEOPLE	USAID POWER DISTRIBUTION PROGRAM	Drawing No.

UTEMPERATURE IN °C

SAG AT INITIAL UNLOADED CONDITION

READ SAGS DIRECT FOR ANY SPAN

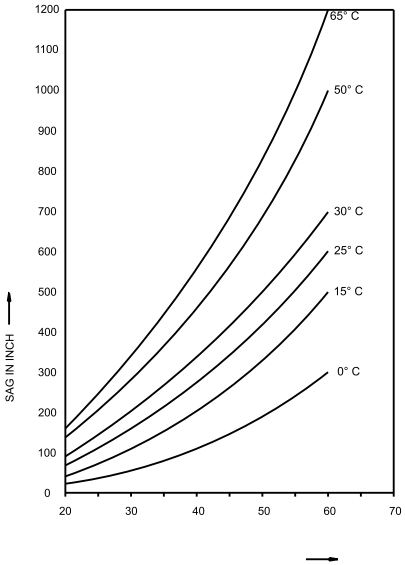

UNIVERSAL SAG CHART FOR ALL ALUMINUM CONDUCTORS

DIGITIZED BY:	ASAD ABBAS	REV

USAID FROM THE AMERICAN PEOPLE	USAID POWER DISTRIBUTION PROGRAM	Drawing No. EW / DZ-1

.075ACSR 11KV	H.T. FEEDER	CU-COPPER AA ALUMINUM ST-STEEL ACSR (ALUM:AREA ONLY)	682	ISOLATOR SINGLE POLE	NUMBER
.05 AA 400 V	L.T. FEEDER	NOTE GIVE AREA IN SQ. INCHES TYPE OF CONDUCTOR AND VOLTAGE.	1218	THREE POLE GANG OPERATED ISOLATOR	NUMBER
66KV	TRANSMISSION LINE		100 20	THREE POLE ON LOAD ISOLATOR	AMPS / NUMBER
	CROSSING NOT CONNECTED		1195	POWER OPERATED ON LOAD ISOLATOR	NUMBER
	LINE CONNECTION CROSSING ELECTRICALLY CONNECTED AND TEE-OFF		SUPPLY SIDE 50	FUSE	AMPS
	NORMALLY OPEN		50 115	FUSE SWITCH	AMPS / NUMBER
11KV 400 V	L.T. LINE SHOWN THROUGH CENTER OF POLE, H.T LINE SHOWN OUT SIDE OF POLE.		300 71	CAPACITOR BANK	KVAR / NUMBER
	SERVICE DROP FROM POLE		600 95	CAPACITOR BANK SWITCHED T-TIME CONTROL V-VOLTAGE CONTROL Q-VAR CONTROL	KVAR / NUMBER
	POLE OR STRUCTURE		200 O 250 MVA 718	OIL CIRCUIT BREAKE	AMPS/MVA / NUMBER
50 7171	TRNSFORMER 3 PHASE INDICATE 1 PHASE IF SUCH IS THE CASE.	KV.A / NUMBER	R 6H100 212	AUTOMATIC CIRCUIT RECLOSER	TYPE / NUMBER
	LIGHTENING ARRESTER AWAY FROM TRANSFORMER OR CABLE TERMINATION		PDR - 50 2405	VOLTAGE REGULATOR	TYPE / NUMBER
25 50	CHANGE IN SIZE OF CONDUCTOR		(NAME) 66/11KV 1500	GRID STATION	VOLTAGES / KVA
UG/OH 5 PILC	CABLES UG: UNDER GROUND OH: OVER HEAD				

NOTE:-

1. ALL FUTURE EXTENSIONS SHOULD BE SHOWN DOTTED.
2. # REFERS TO WAPDA EQUIPMENT NUMBER.
3. INDICATION OF-

1 PHASE
3 PHASE

STANDARD MAPPING SYMBOLS FOR DISTRIBUTION

DIGITIZED BY:	ASAD ABBAS	REV

USAID FROM THE AMERICAN PEOPLE	USAID POWER DISTRIBUTION PROGRAM	Drawing No.

EXAMPLE No. 2 OF HT VOLATAGE DROP CALCULATION PROCEDURE

ACTUAL MAP:

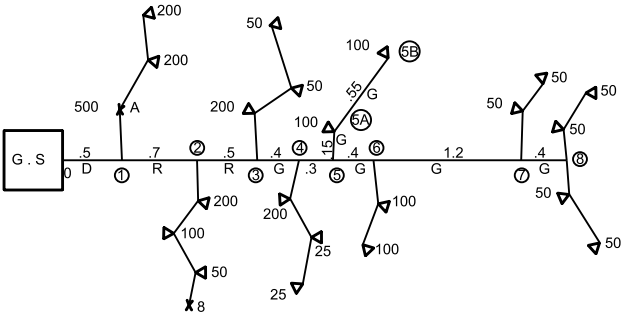

SIMPLIFIED MAP:

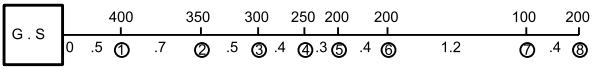

LEGEND:

G.S..... GRID STATION

△ ..... DISTRIBUTION TRANSFORMER.

A &B..... H.T METERED CONSUMERS

D,G&R..... ACSR CONDUTORS DOG, GOPHER & RABBIT.

NOTES:

i) TOTAL FEEDER PEAK - DEMAND 1500 KVA. O.B.PF

ii) THE PEAK DEMAND OF CONSUMER 'A' 500 KVA AND THAT OF 'B' ZERO DURING PEAK HOURS P.F O.B.

VOLTAGE CALCULATION PROCEDURE

DIGITIZED BY:	ASAD ABBAS	REV

USAID FROM THE AMERICAN PEOPLE	USAID POWER DISTRIBUTION PROGRAM	Drawing No.

Exhibit 7

Sheet 6 OF 6

PAKISTAN

WATER AND POWER DEVELOPMENT AUTHORITY

HT VOLTAGE DROP CALCULATIONS

Sheet:_____

Date:_____

Made by_____

Circle_____ HYPOTHETICAL_____ Grid station__TYPICAL_____ Circuit_SAMPLE_____

1. Maximum Load on circuit 78.8 Amp, 11 KV, 1500 KVA
2. Estimated Demand of HT Customers 500 KVA
3. Estimated Demand for LT (1).(2)____1000 KVA
4. LT Demand Factor (3) Divided by Total of Transformer KVA Connected. (2000) – 0.5
5. Nominal Circuit Voltage 11 KV
6. Grid station Transformer Bank Capacity ___KVA
7. Regulator Capacity _____ Amp._____ KVA

CALCULATED VOLTAGE DROP

Grid Station to First Trans 0.5 Percent

First to Last Transformer 1.97 Percent

Section No.	CIRCUIT DATA				DATA FOR EACH SECTION				TOTAL KVA DEMAND OVER SECTION	SECTION VOLTAGE DROP (PERCENT) (CxDxJ) /10000	SUBTOTAL VOLTAGE DROP (PERCENT)	TOTAL VOLTAGE DROP FOR GRID ST. (PERCENT)
	Conductor		Distance Miles	Percent drop per 1000 KVA Miles	TRANSF KVA CONN.	DEMAND FACTOR	L.T KVA DEMAND	H.T KVA DEMAND				
	Phase	Size										
A	B		C	D	E	F	G	H	J	K	L	M
01	3	D	0.5	0.66	400	0.5	200	500	1500	0.5		0.5
12	3	R	0.7	1.02	550	0.5	175		800	0.57		1
23	3	R	0.5	1.02	300	0.5	150		625	0.32		1.35
34	3	G	0.4	1.75	250	0.5	125		475	0.33		1.71
45	3	G	0.3	1.75	200	0.5	100		350	0.18		1.97
56	3	G	0.4	1.75	200	0.5	100		250	0.18		2
67	3	G	1.2	1.75	100	0.5	50		150	0.32		2.4
78	3	G	0.4	1.75	200	0.5	100		100	0.07		2.4
5A	3	G	0.15	1.75	100	0.5	50		100	0.03	0.03	1.91
5B	3	G	0.55	1.75	100	0.5	50		50	0.05	0.03	1.91

USAID
FROM THE AMERICAN PEOPLE

USAID POWER
DISTRIBUTION PROGRAM

Drawing No.

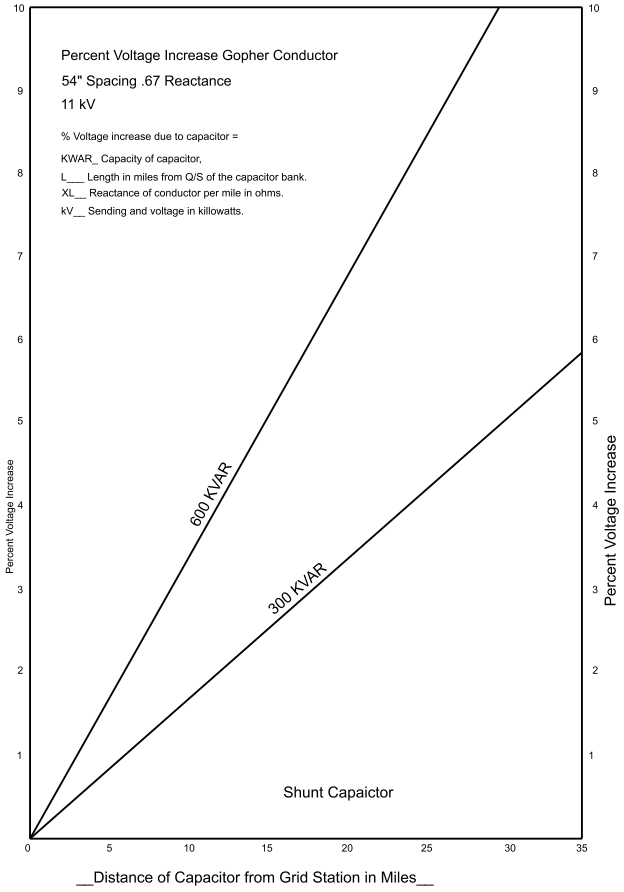

Percent Voltage Increase Gopher Conductor

DIGITIZED BY:	ASAD ABBAS	REV

USAID FROM THE AMERICAN PEOPLE	USAID POWER DISTRIBUTION PROGRAM	Drawing No.

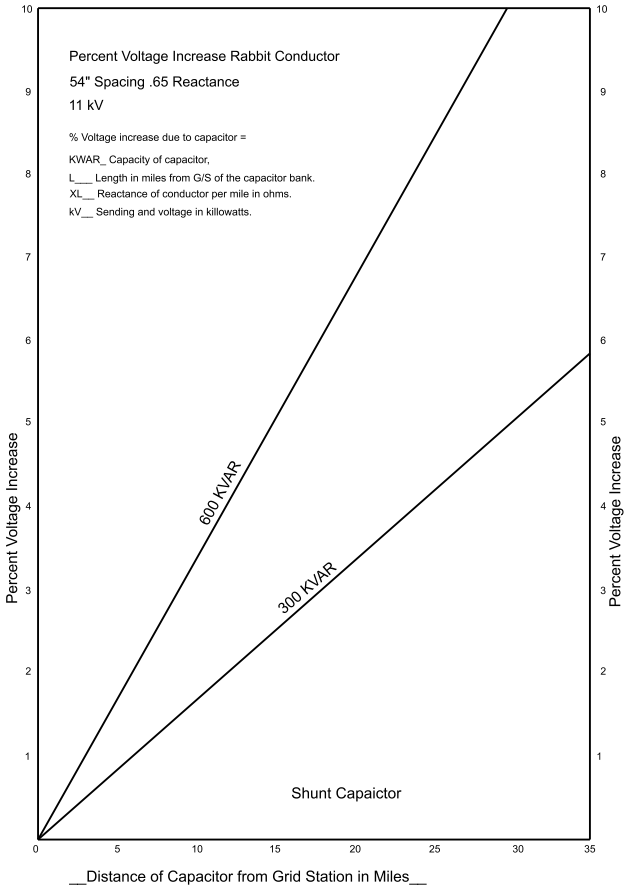

Percent Voltage Increase Rabbit Conductor

DIGITIZED BY:	ASAD ABBAS	REV

USAID FROM THE AMERICAN PEOPLE	USAID POWER DISTRIBUTION PROGRAM	Drawing No.

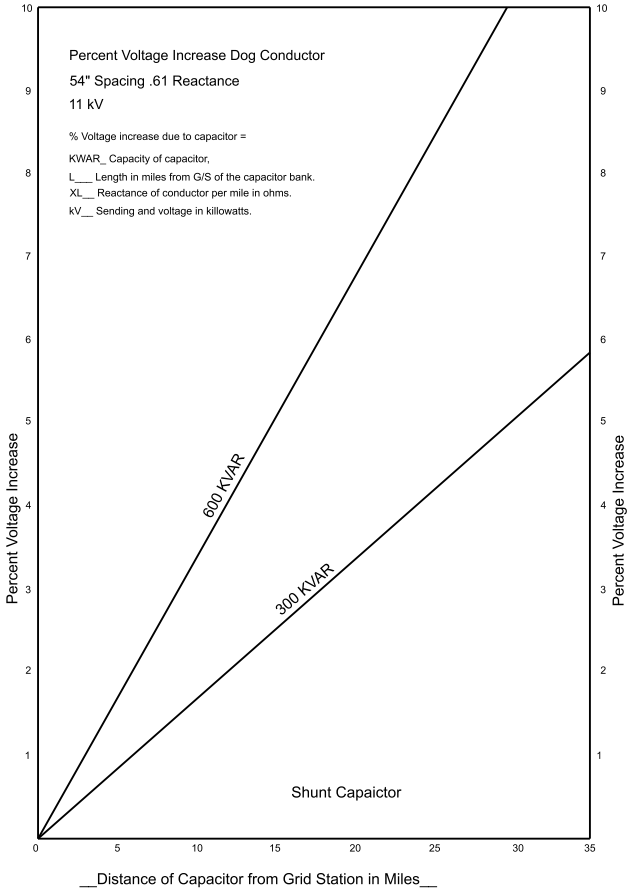

Percent Voltage Increase Dog Conductor

DIGITIZED BY:	ASAD ABBAS	REV

USAID FROM THE AMERICAN PEOPLE	USAID POWER DISTRIBUTION PROGRAM	Drawing No. C2-C

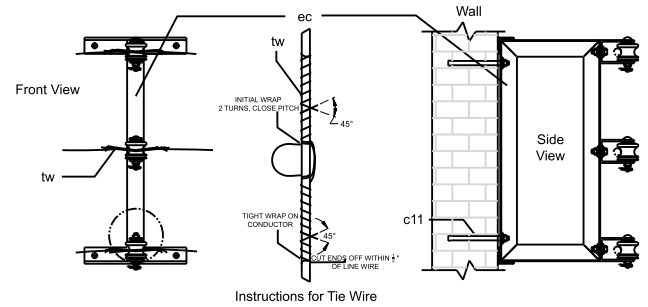

Instructions for Tie Wire

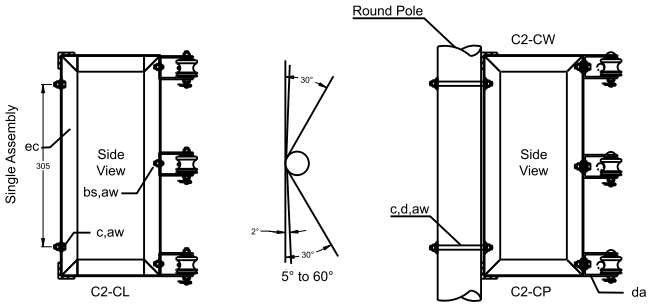

C2-CL

5° to 60°

C2-CP

CODE	ITEM	C2-CW	C2-CL	C2-CP	DESCRIPTION
IRGCA 0299	aw	3	5	5	Spring washer 5/8"
IRGCA 0309	c			2	Machine bolt 5/8" x 10"
IRGCA 0311	c	3	5	3	Machine bolt 5/8" x 1½"
	c11	4			Rawal Anchor Bolt 12mm x 100mm, w nut, washer, spring washer
IRGCA 0252	cm	3	3	3	Spool insulator ANSI 53-2
IRGCA 0314	d			2	Square washer 2 1/4" w x 13/16" hole
IRGCA 0321	da	3	3	3	Spool insulator Support
IRGCA 0___	ec	1	1	1	Extension Bracket
IRGCA 0269	tw	3	3	3	Tie wire-mtrs.

11 kV ASSEMBLY FOR CONGESTED AREAS 5° TO 60 °

DRAWN BY:	ASAD ABBAS	REV

USAID FROM THE AMERICAN PEOPLE	USAID POWER DISTRIBUTION PROGRAM	Drawing No. C1-C

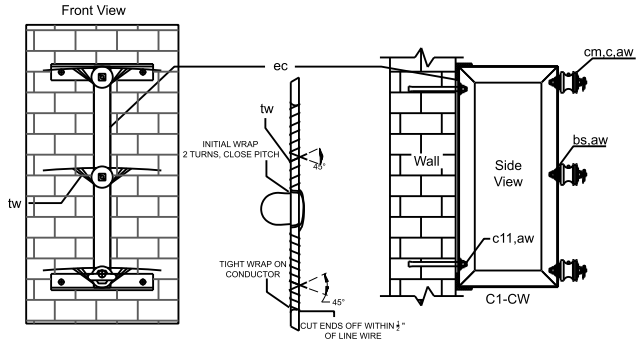

Instructions for Tie Wire

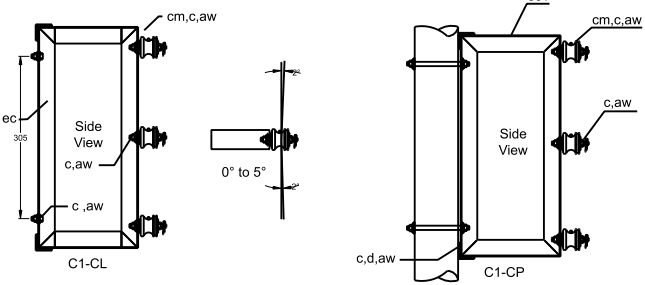

CODE	ITEM	C1-CW	C1-CL	C1-CP	DESCRIPTION
IRGCA 0229	aw	3	5	5	Spring washer 5/8"
IRGCA 0302	c	3	3	3	Machine bolt 5/8" x 4"
IRGCA 0309	c			2	Machine bolt 5/8" x10"
IRGCA 0311	c		2		Machine bolt 5/8" x 1½"
	c11	4			Rawal Anchor Bolt 12mm x 100mm w nut, washer & spring washer
IRGCA 0252	cm	3	3	3	Spool insulator ANSI 53-2
IRGCA 0314	d			2	Square washer 2 3/4" w x 13/16" hole
	ec1	1	1	1	Extension Bracket
IRGCA 0269	tw	3	3	3	Tie wire-mtrs.

11 kV ASSEMBLY FOR CONGESTED AREAS 0° TO 5°

DRAWN BY:	ASAD ABBAS	REV

USAID POWER DISTRIBUTION PROGRAM	Drawing No. C7-C

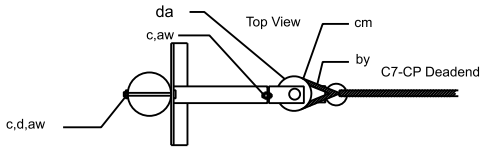

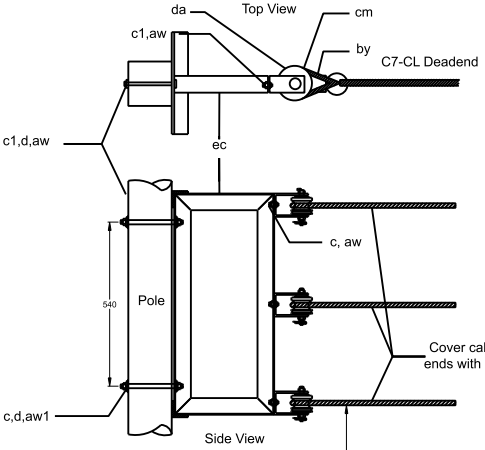

CODE	ITEM	C7-CL	C7-CP	DESCRIPTION
IRGCA 0299	aw	5	5	Spring washer 5/8"
IRGCA 0290	by	3	3	Preformed deadend, insulated conductor
IRGCA 0309	c		2	Machine bolt 5/8" x 10"
IRGCA 0311	c	5	3	Machine bolt 5/8" x 1 1/2"
IRGCA 0252	cm	3	3	Spool Insulator ANSI 53-2
IRGCA 0314	d		2	Square washer 2 1/4" w 11/16" hole
IRGCA 0321	da	3	3	Spool insulator bracket
IRGCA ____	ec	1	1	Extension Bracket

11 kV DEADEND UNITS FOR CONGESTED AREAS ON CONCRETE POLES

DRAWN BY:	ASAD ABBAS	REV

USAID FROM THE AMERICAN PEOPLE	USAID POWER DISTRIBUTION PROGRAM	Drawing No. C7-D

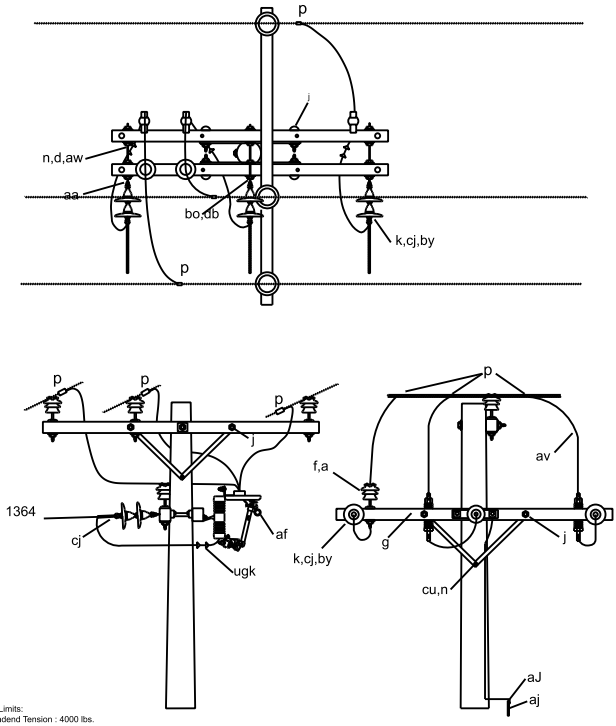

Design Limits:
C7- Deadend Tension : 4000 lbs.
(17, 792 N) maximum per
conductor

ITEM	Qty:	Description	ITEM	Qty:	Description
a	2	Insulator, Pin Type ANSI 55-5	cu	4	Crossarm brace 1½" x ½" x 28" w 7/16" and 9/16" holes
aa	2	Eyenut ⅝"	d	16	2½" x 2½" x 3/16" square washer 11/16" hole
af	3	Cutout 15kV	db	1	Deadend Bracket 12"
aj	1	Ground ⅝" x 8 ft galvanized	f	2	Crossarm pin for wood crossarm, 1" insulator threads 6" height
aj	1	Ground rod clamp	g	2	Crossarm, wood 3 ½" x 4 ½" x 8 ft.
av	6	mtrs jumper conductor 50mm2	j	4	Carriage bolt ⅝" x 4"
aw	16	½" split spring washers	k	6	Suspension insulator ANSI 52-1
bo	1	Anchor Shackle	n	1	Bolt, double arming ½" x 12"
by	3	Preformed grip for 15kV insulated cable	n	4	Bolt, double arming ½" x 20"
cj	3	Clevis thimble deadend	p	6	Compression connectors H-type size as required
cj	12	mtrs ⅜" 3strand galvanized ground wire	tw	2	Tie wire, meters
			Ugk	3	15kV terminations for 35mm 2 insulated cable

3Ø DEADEND ON CROSSARMS WITH LOAD BREAK CUTOUT

DRAWN BY:	ASAD ABBAS	REV

USAID FROM THE AMERICAN PEOPLE	USAID POWER DISTRIBUTION PROGRAM	Drawing No. C7-T

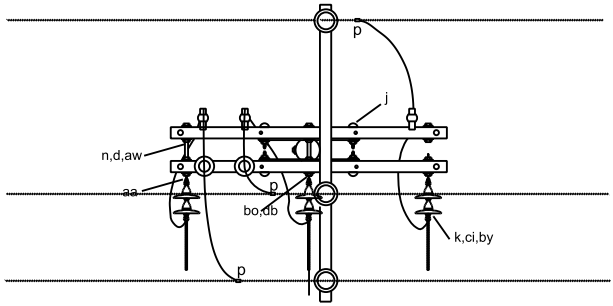

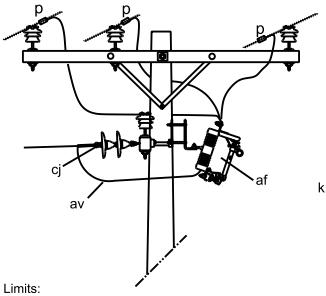

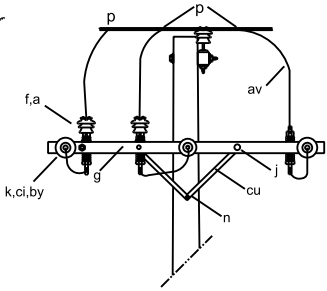

Design Limits:
C7- Deadend Tension : 4000 lbs.
(17, 792 N) maximum per
conductor

ITEM	C7-T	DESCRIPTION	ITEM	C7-T	DESCRIPTION
a	2	Insulator, Pin Type ANSI 55-5	db-12	1	Deadend Bracket 12"
aa	2	Eyenut 5/8"	f	2	Crossarm pin for woodcrossarm,1" insulator threads 6" height
af	3	Cutout 15kV 200amp	g	2	Crossarm, wood 3 5/16" x 4 5/16" x 8 ft.
av	6	mtrs jumper conductor 50mm2	i	4	Carriage bolt 1/2" x 4"
aw	16	5/8" split spring washers	k	6	Suspension insulator ANSI 52-1
bo	1	Anchor Shackle	n	1	Bolt, double arming 1/2" x 12"
by	3	Preformed grip for 15kV	n	4	Bolt, double arming 1/2" x 20"
ci	3	Clevis thimble deadend	p	6	Compression connectors H-type size as required
cu	4	Crossarm brace 1 1/4"x1/4"x28"w7/16" and 9/16" holes	tw	2	Tie wire, meters
	16	2 1/4" x 2 1/4" x 3/16" sq. washer 11/16" hole			

3Ø DEADEND ON CROSSARMS WITH LOAD BREAK CUTOUT

DRAWN BY:	ASAD ABBAS	REV

USAID FROM THE AMERICAN PEOPLE	USAID POWER DISTRIBUTION PROGRAM	Drawing No. C7-D

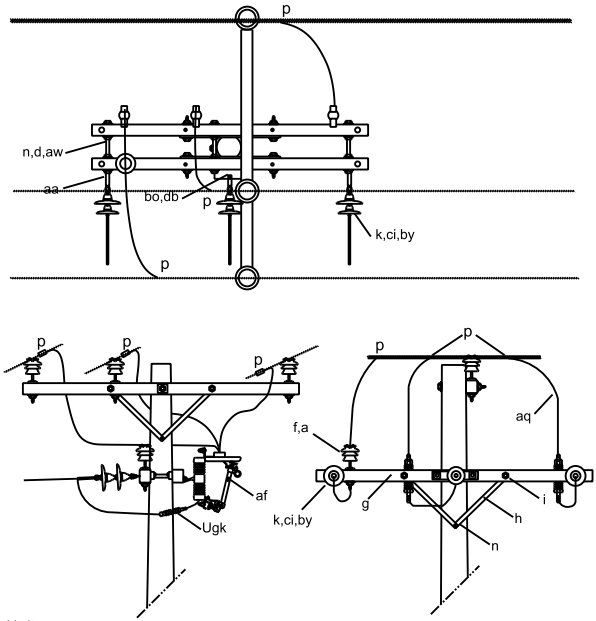

Design Limits:
C8- Deadend Tension : 4000 lbs.
(17, 792 N) maximum per
conductor

NOTE:
C8-D may use with multiplex LT

ITEM	C8-D	DESCRIPTION	ITEM	C8-D	DESCRIPTION
aa	3	Eyenut 5/8"	f	2	Crossarm pin for wood crossarm, 1" insulator threads, 6" height
a	2	Insulator, Pin type ANSI 55-5	g	2	Cross, wood 3 3/4", 4 5/8" x 8ft.
af	3	Cutout 15kV	h	2	Crossarm brace 1/2" x 1/2" x 28" W 9/16" and 7/16" holes
aw	16	5/8" Split spring washers	j	4	Carriage bolt 3/8" x 4"
av	6	mtrs jumper conductor	k	6	Deadend insulators ANSI 52-1
bo	1	Anchor shackle	n	1	Bolt, double arming 1/2"x12"
by	3	Preformed grip for 15kV insulated cable	n	5	Bolt, double arming 5/8"x20"
ci	3	Clevis thimble deadend	p	3	Compression connectors H-type
d	16	2 1/4"x2 1/4"x 3/16" Square washer 1/16" hole	tw	3	Tie wire, meters
db	1	Deadend bracket	Ugk	3	15kV termination kit for 35mm2 insulated cable

3"Ø DEADEND ON CROSSARMS

DRAWN BY:	ASAD ABBAS	REV

USAID FROM THE AMERICAN PEOPLE	USAID POWER DISTRIBUTION PROGRAM	Drawing No. J1-1, J1-2, J1-3

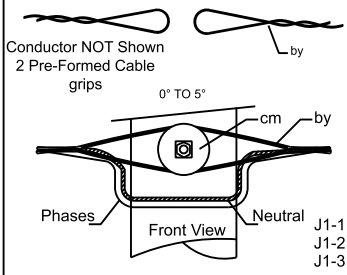

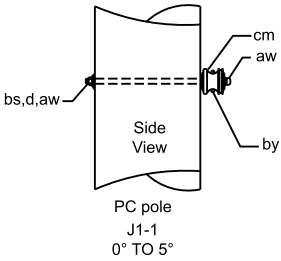

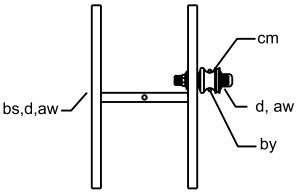

Lattice pole
J1-2

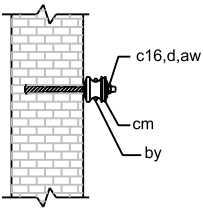

Wall
J1-3

ITEM	J1-1	J1-2	J1-3	Description	Source
aw	1	1	1	Spring washer 5/8" (16mm)	
bs	1			Single upset bolt 5/8"x12" (16mmx508mm)	
bs		1		Single upset bolt 5/8"x1½" thread (16mmx38mm)	
c16			1	Rawal anchor stud M16 x 180mm	
cm	1	1	1	Spool insulator ANSI 53-2	
d		1	2	Round washer 1¾"dia 11/16" hole (Ø35mm - 18mm hole)	
by	2	2	2	Preformed deadend partial tension	

SECONDARY UNITS FOR MULTIPLEX 0° TO 5 °

DRAWN BY:	ASAD ABBAS	REV

USAID FROM THE AMERICAN PEOPLE	USAID POWER DISTRIBUTION PROGRAM	Drawing No. J1-N1, J1-N2

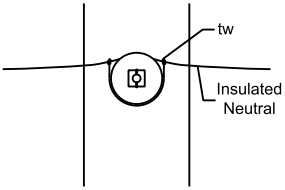

J1-N1
J1-N2

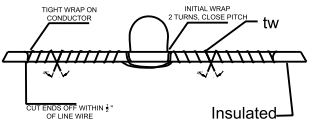

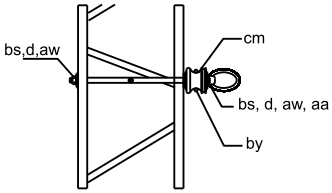

Lattice pole
J1-N2

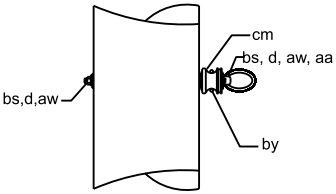

PC pole
J1-N1

CODE	ITEM	J1-N1	J1-N2	Description
	aa	1	1	Oval eye nut 5/8"
	aw	2	2	Spring washer 5/8"
	bs	1		Single upset bolt 5/8"x12"
	bs		1	Single upset bolt 5/8"x1½" thread
	cm	1	1	Spool insulator ANSI 53-2
	d	1		Square washer 2¼"w 11/16" hole
	d		1	Round washer 1¾"w 11/16" hole
	tw	0.5	0.5	Tie wire, Al, annealed #4 AWG, mtr

SECONDARY UNITS - COVERED NEUTRAL

DRAWN BY:	ASAD ABBAS	REV

USAID FROM THE AMERICAN PEOPLE	USAID POWER DISTRIBUTION PROGRAM	Drawing No. J2-1, J2-2, J2-3

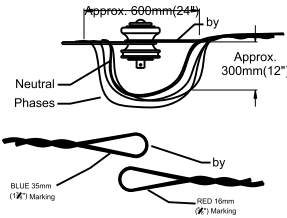

5° TO 90°
J2-1
J2-2

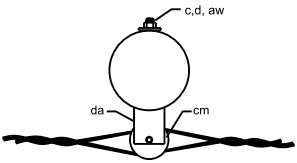

Conductor NOT Shown2 Pre-Formed Cable grips

Pc pole
5° TO 90°
J2-1

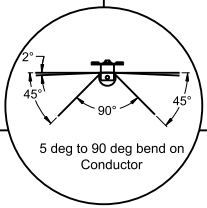

5 deg to 90 deg bend on Conductor

Lattice pole
5° TO 90°
J2-2

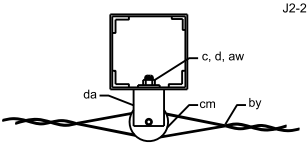

Conductor NOT Shown
2 Pre-Formed Cable grips

CODE	ITEM	J2-1	J2-2		Description
	aw	1	1		Spring washer 5/8" (16mm)
	c	1			Bolt, machine 5/8"x12" (16mmx305mm)
	c		1		Bolt, Machine 5/8"x1 1/2" (16mmx38mm)
	cm	1	1		Spool insulator ANSI 53-2
	d	1			Square washer 2 1/4"w 11/16" hole (W57mm - 18mm)
	d	2	1		Round washer 1 3/4"w 11/16" hole (w44mmx18mm hole)
	da	1	1		Spool insulator support
	by	2	2		Preformed deadend partial tension
	aw	1	1		Spring washer 12mm (1/2")
	zt1	2	2		Zip Tie 9"x0.3" for 2 inch bundle

SECONDARY UNITS FOR MULTIPLEX 5° TO 90 °

DRAWN BY:	ASAD ABBAS	REV

USAID FROM THE AMERICAN PEOPLE	USAID POWER DISTRIBUTION PROGRAM	Drawing No. J2-N1, J2-N2

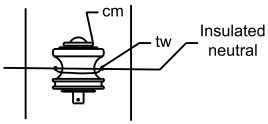

J2-N1
J2-N2

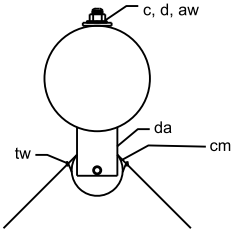

PC Pole
J2-N1

J2-N2

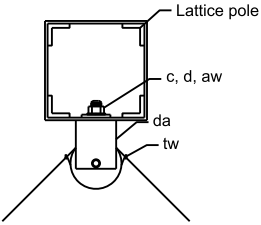

ITEM	J2-N1	J2-N2		Description
aw	1	1		Spring washer ⅝" (16mm)
c	1			Bolt, machine ⅝"x12" (16mmx305mm)
c		1		Bolt, Machine ⅝"x1½" (16mmx38mm)
cm	1	1		Spool insulator ANSI 53-2
d	1			Square washer 2½"w 11/16" hole (W57mm - 18mm)
d		1		Round washer 1¾"w 11/16" hole (w44mmx18mm hole)
da	1	1		Spool insulator support
pb1	1	1		Service Dead end bracket
tw	0.5	0.5		Tie wire, Al, anealed #4 AWG, mtr

SECONDARY UNITS - COVERED NEUTRAL

DRAWN BY:	ASAD ABBAS	REV

USAID FROM THE AMERICAN PEOPLE	USAID POWER DISTRIBUTION PROGRAM	Drawing No. J9-1, J9-2

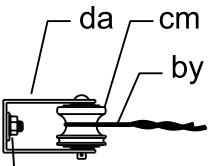

d, aw, C will change according to the instulation

J9 - 1
J9 - 2

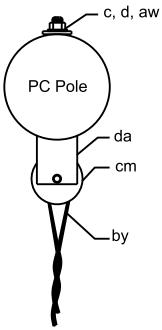

PC Pole
J9 - 1

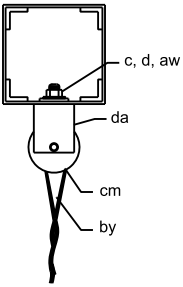

Lattice pole
J9 - 2

CODE	ITEM	J9-1	J9-2	DESCRIPTION
	aw	1	1	Spring washer 5/8" (16mm)
	c	1		Bolt, machine 5/8"×12" (16mmx305mm)
	c		1	Bolt, Machine 5/8"x1½" (16mmx38mm)
	cm	1	1	Spool insulator ANSI 53-2
	d	1		Square washer 2¼"w 1/16" hole (W57mm - 18mm)
	d		1	Round washer 1¾"w 1/16" hole(w44mmx18mm hole)
	da	1	1	Spool insulator support
	by	1	1	Preformed deadend, full tension

SECONDARY UNITS - DEADEND

DRAWN BY:	ASAD ABBAS	REV

USAID FROM THE AMERICAN PEOPLE

USAID POWER DISTRIBUTION PROGRAM

Drawing No. J21 J22

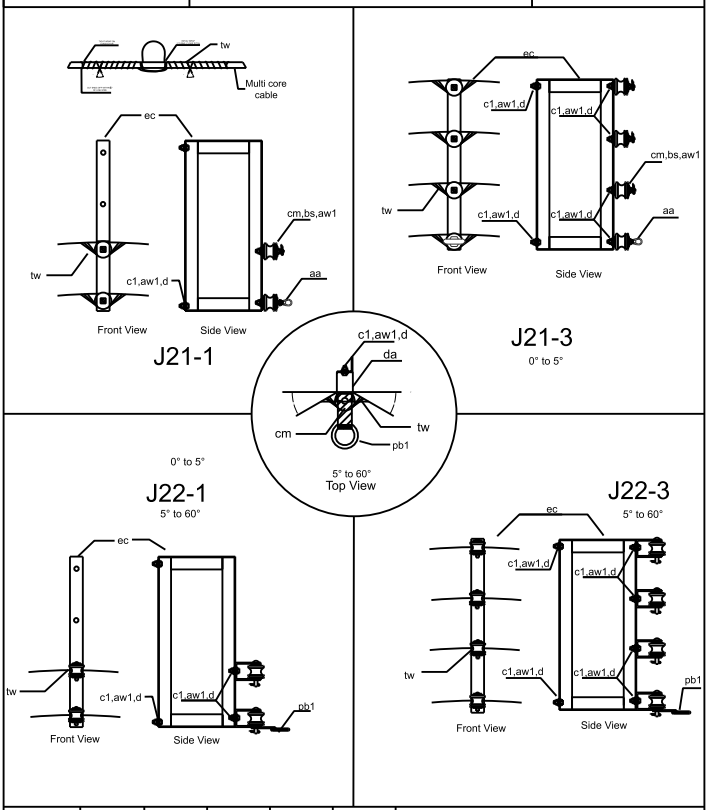

CODE	ITEM	J21-1	J21-3	J22-1	J22-3	Description
	pb1			1	1	Service Ring Bracket
	aa	1	1			Eyenut 16 mm
	ec	1	1	1	1	Offset Bracket
	bs	2	4			Single Upset Bolt 16 mm x 25 mm
	cm	2	4	2	4	Spool Insulator ANSI 53-2
	c1	2	2	4	6	Machine Bolt 16 mm x 25 mm
	tw	2	4	2	4	Tie Wire
	aw1	4	6	4	6	Lockwasher 16 mm
	d	6	8	8	12	Round washer 1 3/4"w 11/16" hole

SECONDARY UNITS IN CONGESTED AREAS FOR STEEL LATTICE STRUCTURE

DRAWN BY:	ASAD ABBAS	REV

USAID
FROM THE AMERICAN PEOPLE

USAID POWER DISTRIBUTION PROGRAM

Drawing No.
J23 J24

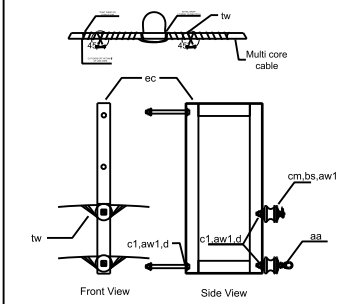

J23-1 0° to 5°

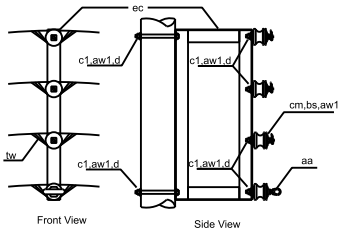

J23-3 0° to 5°

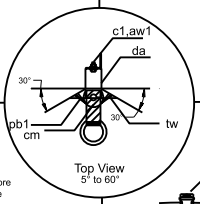

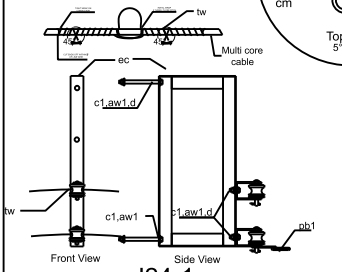

J24-1 5° to 60°

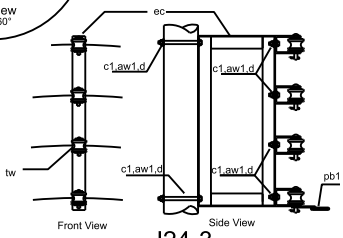

J24-3 5° to 60°

CODE	ITEM	J23-1	J23-3	J24-1	J24-3	Description
	d	2	2	2	2	Square Washer 50 mm x 50 mm x 8 mm with 17 mm hole
	aa	1	1			Eyenut 16 mm
	ec	1	1	1	1	Offset Bracket
	bs	2	4			Single Upset Bolt 16 mm x 25 mm
	cm	2	4	2	4	Spool Insulator ANSI 53-2
	pb1			1	1	Service Ring Bracket
	c2	2	2	2	2	Machine Bolt 16 mm x 250 mm
	c1	2	4	4	6	Machine Bolt 16 mm x 25 mm
	tw	2	4	2	4	Tie Wire
	aw1	4	6	4	6	Lockwasher 16 mm
	da			2	4	Secondary Insulator Bracket

SECONDARY UNITS IN CONGESTED AREAS FOR STEEL OR CONCRETE POLES

DRAWN BY:	ASAD ABBAS	REV

USAID FROM THE AMERICAN PEOPLE

USAID POWER DISTRIBUTION PROGRAM

Drawing No. J25 J26

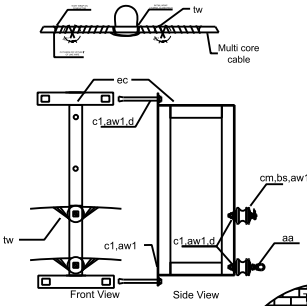

J25-1 0° to 5°

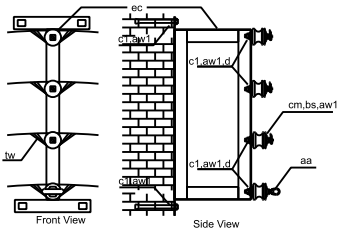

J25-3 0° to 5°

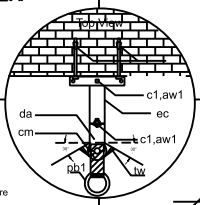

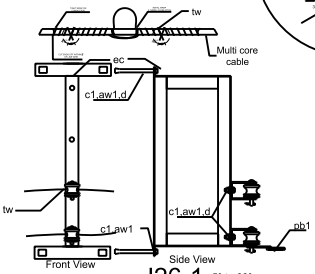

J26-1 5° to 60°

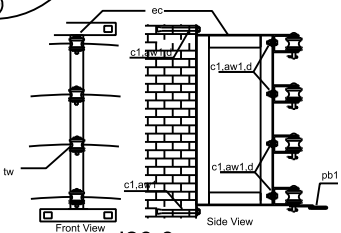

J26-3 5° to 60°

CODE	ITEM	J23-1	J23-3	J24-1	J24-3	Description
	db	2	2	2	2	Deadend Bracket
	aa	1	1			Eyenut 16 mm
	ec	1	1	1	1	Offset Bracket
	bs	2	4			Single Upset Bolt 16 mm x 25 mm
	cm	2	4	2	4	Spool Insulator ANSI 53-2
	pb1			1	1	Service Ring Bracket
	c11	4	4	4	4	Rawal Bolt 12 mm x 100 mm
	c1	2	2	6	8	Machine Bolt 16 mm x 25 mm
	tw	2	4	2	4	Tie Wire
	aw1	2	2	4	6	Lockwasher 16 mm
	da			2	4	Secondary Insulator Bracket

SECONDARY UNITS IN CONGESTED AREAS ON MASONRY WALLS

DRAWN BY:	ASAD ABBAS	REV

USAID FROM THE AMERICAN PEOPLE	USAID POWER DISTRIBUTION PROGRAM	Drawing No. J27

J27 Deadend

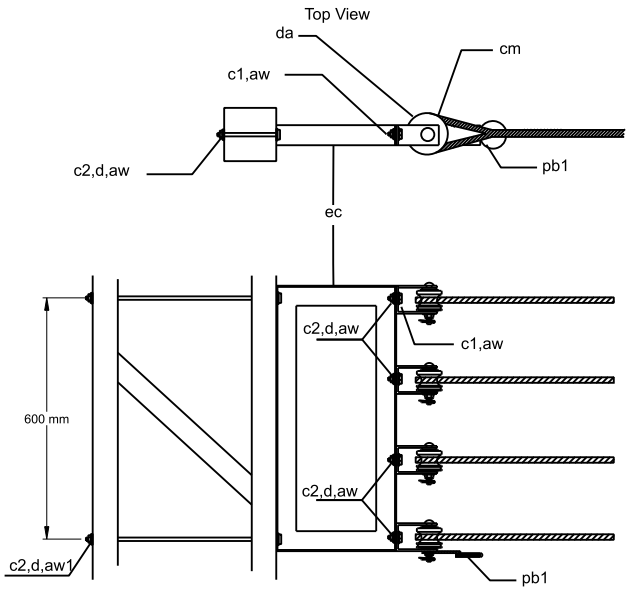

J27-1 - Single Phase Deadend

J27-3 - Three Phase Deadend

CODE	ITEM	J27-1	J27-3		Description
	d	2	2		Square Washer 50 mm x 50 mm x 8 mm with 17 mm hole
	da	2	4		Secondary Insulator Bracket
	ec	1	1		Offset Bracket
	aw	4	6		Spring Washer 16 mm
	cm	2	4		Spool Insulator ANSI 53-2
	pb1	1	1		Service Ring Bracket
	c2	2	2		Machine Bolt 16 mm x 250 mm
	c1	4	6		Machine Bolt 16 mm x 25 mm
	rp	2	4		LT conductor deadend

SECONDARY DEADEND UNITS FOR CONGESTED AREAS ON LATTICE POLES

DRAWN BY:	ASAD ABBAS	REV

USAID FROM THE AMERICAN PEOPLE	USAID POWER DISTRIBUTION PROGRAM	Drawing No. J28

J28 Deadend

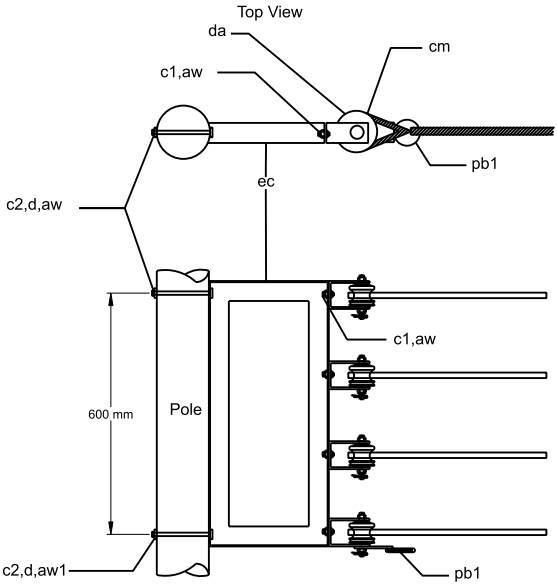

J28-1 - Single Phase Deadend

J28-3 - Three Phase Deadend

CODE	ITEM	J28-1	J28-3	Description
	d	2	2	Square Washer 50 mm x 50 mm x 8 mm with 17 mm hole
	da	2	4	Secondary Insulator Bracket
	ec	1	1	Offset Bracket
	aw	4	6	Spring Washer 16 mm
	cm	2	4	Spool Insulator ANSI 53-2
	pb1	1	1	Service Ring Bracket
	c2	2	2	Machine Bolt 16 mm x 250 mm
	c1	2	4	Machine Bolt 16 mm x 25 mm
	rp	2	4	LT conductor deadend

SECONDARY DEADEND UNITS FOR CONGESTED AREAS ON CONCRETE POLES

DRAWN BY:	ASAD ABBAS	REV

USAID FROM THE AMERICAN PEOPLE	USAID POWER DISTRIBUTION PROGRAM	Drawing No. J10-1,2,3&4

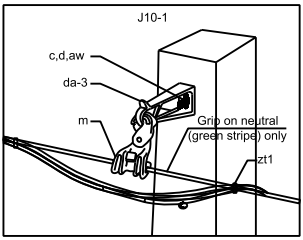

ABC LT Suspension Bracket (PC Pole)

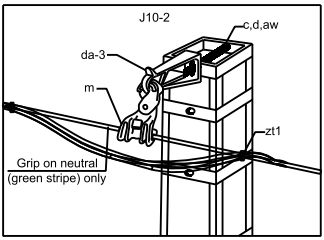

ABC LT Suspension Bracket (Lattice Pole)

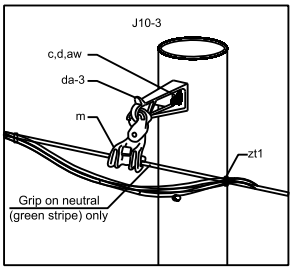

ABC LT Suspension Bracket (Tubular Pole)

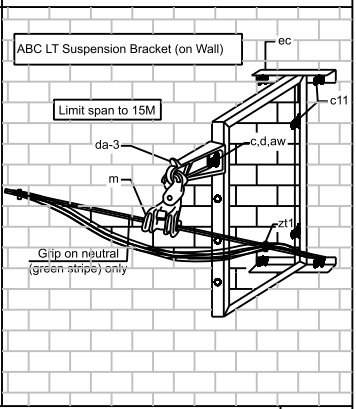

ITEM	J10-1	J10-2	J10-3	J10-4	Description	SOURCE
aw	1	1	1	1	Spring washer 5/8" (J139)	IRGCA0299
c				1	Bolt machine 5/8" X 1.5" (J8801-1/2) With 1 NUTs (Wall brackets)	IRGCA0311
			1		MBolt machine 5/8" X 6" (J8806) With 1 NUTs (Tube poles)	IRGCA0307
	1				Bolt machine 5/8" X 10" (J8810) With 1 NUTs (PC poles)	IRGCA0309
		1			Bolt machine 5/8" X 12" (J8812) With 1NUTs (Lattice poles)	IRGCA0310
c11				4	Rawal anchor bolt 12mm x 100mm with washer, nut and spring washer	
d		1	1	1	Round washer,13/4" dia w 11/16" hole (J1088)	IRGCA0316
d	1				Washer, square 21/4" w 11/16" hole (J1075)	IRGCA0314
da-3	1	1	1	1	ABC Pole bracket, 1bolt,15mm ext. 1000kg RBS to fit suspension clamp, Items 9 and 10	IRGCA0453
ec				1	Extension Frame, galvanized	
m	1	1	1	1	Suspension Clamp for Insulated neutral 8-16mm dia 1200kg ult	IRGCA0459
					Suspension clamp for insulated neutral 15-18mm dia 2000 kg ult	IRGCA0454
zt1	2	2	2	2	Plastic Zip Tie UV resistant 9"x 0.3" for 2 inch bundle Burndy:CT120200L0	IRGCA0347

ABC CABLE SUSPENSION

DRAWN BY:	ASAD ABBAS	REV

USAID FROM THE AMERICAN PEOPLE	USAID POWER DISTRIBUTION PROGRAM	Drawing No. K10-P1

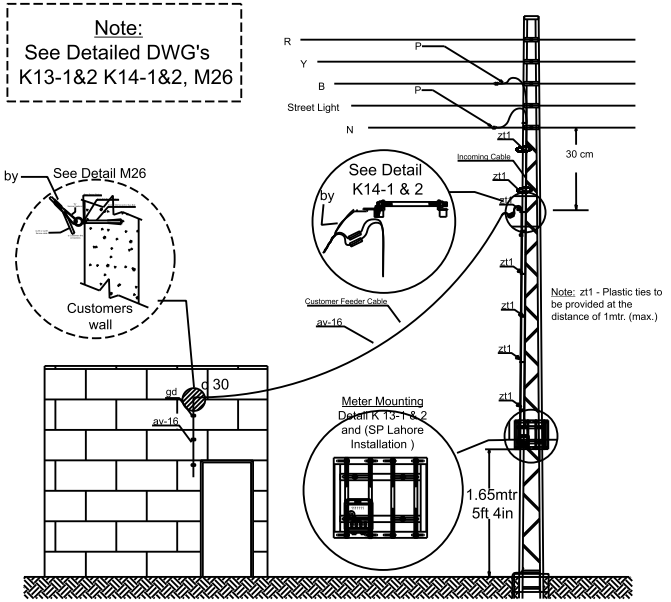

Note:
See Guides M-5 to M-8 for Variations and details

K10-P1

* As required

** Maximum unsupported distance from pole to customer attachment point is15 meters

ITEM	K10-P1	DISCRIPTION
av16	(____mtr)	Service cable 2 x 16 mm²
p	2	Service connector P&G S-117
ga-1	1	Single phase meter
c6	4	6mm Machine bolt Ø6 mm x required length& nuts
d6	8	6mm Round flat washer Ø6 mm x 25 mm x 1.5 mm
aw6	4	6mm Spring washer Ø6 mm
by	1.5 mtr	Service cable deadend (AAC 3.5mm x 1)
c30	1	8mm Rawal eyebolt Ø8 mm x 100 mm
aw8	1	8mm Spring washer Ø8 mm
gd	3	PVC cable clamp
zt1	12	Zip tie 6 mm x required length
p	2	Pre-filled insulated Service connector

ABC CABLE SUSPENSION

DRAWN BY:	ASAD ABBAS	REV

USAID FROM THE AMERICAN PEOPLE	USAID POWER DISTRIBUTION PROGRAM	Drawing No. K10-P3

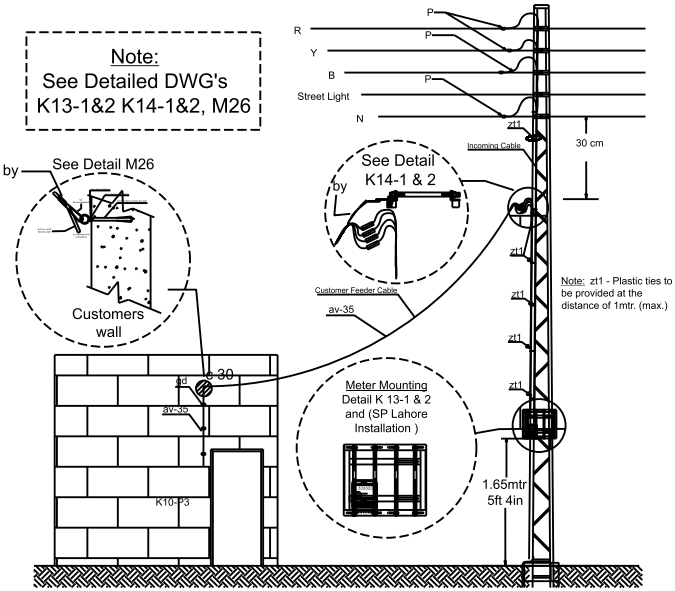

Note:
See Guides M-5 to M-8 for Variations and details

K10-P3

ITEM	K10-P3	DESCRIPTION
av35	(_____mtr)	Service cable 4 x 35 mm²
p	4	Service connector P&G S-117
ga-3	1	Three phase meter *as designed (RF/Ame static)
c6	4	6mm Machine bolt & nuts
d6	8	6mm Round flat washer
aw6	4	6mm Spring washer
c30	1	8mm Rawal eyebolt Ø8 mm x 100 mm
aw8	1	8mm Spring washer
gd	3	PVC cable clamp 1½"
zt1	12	Zip tie 6 mm x required length
by	2mtr	Service cable deadend (AAC 3.5mm x 1)
p	4	Pre-filled insulated Service connector

SERVICE UNIT FOR POLE MOUNT 3Ø METER

DRAWN BY:	ASAD ABBAS	REV

USAID FROM THE AMERICAN PEOPLE	USAID POWER DISTRIBUTION PROGRAM	Drawing No. K10-W1C

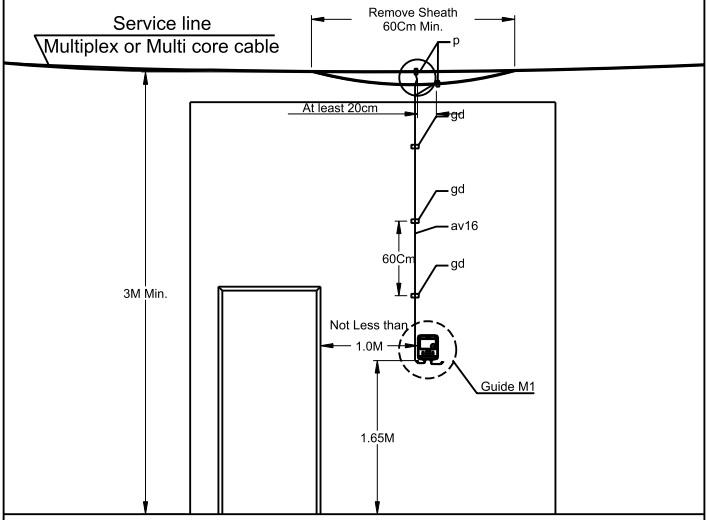

K10-W1C

ITEM	Qty:	Description	SOURCE
av16	4	Service entrance cable 2*16mm2 AL phase and neutral conductors w XLP insulation and UV inhibited PVC jacket	IRGMI0423
aw6	8	Spring washer for 6mm bolt, stainless steel	IRGMI0405
c31	4	Rawal Anchor Bolt M8x60mm, galvanized,with Nut and Washer	IRGMI0413
c6	8	Bolt Machain M6x25mm, Stainless steel, with Nut,Grade 70	IRGMI0414
d6	8	Round flat washer 15x1.5mm, 6mm hole,SS	IRGMI0283
ga1	1	Single Phase whole current static energy meter (240 V,10/40 AMPS)	IRGMI0403
gd	3	PVC cable clamp with nail, 5/8" dia cable	IRGMI0416
p	2	Insulation Piercing connector 16-95mm2 main 4-25mm2 tap	IRGCA0451
spm	2	Single Phase Meter Mounting Bracket (spm)	IRGMI0124
ss1	2	Meter Mounting Steel Strip 30X3X275mm (SS1)	IRGMI0281
zt1	4	Zip/Cable Tie 4.8mm 300mm	IRGMI0110

SERVICE UNIT FOR WALL MOUNT 1 Ø METER CONGESTED AREA

DRAWN BY:	ASAD ABBAS	REV

USAID FROM THE AMERICAN PEOPLE	USAID POWER DISTRIBUTION PROGRAM	Drawing No. K10-W2C

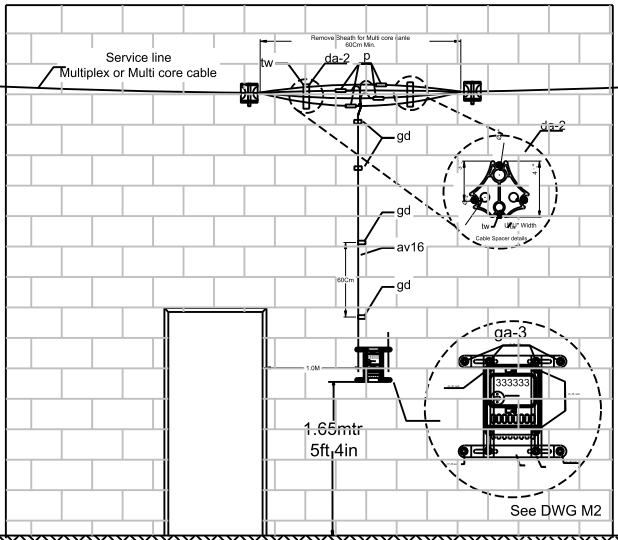

ITEM	Qty:	Description	ITEM	Qty:	Description
av-35	4	Service cable 4 x 35mm², mtr	da-2	1	4 conductor spacer, tie on type
ga3	1	Three phase meter	gd	3	PVC cable clamp w nail
c6	4	6mm Machine bolt 6mm dia x 25mm & nuts	t	1.2	Electrical tape, vinyl, electricians, 20mm, mtr
aw6	4	6mm Spring washer for 6mm bolt	tw	1.5	Tie wire, Al annealed #4 AWG, mtr
d6	4	6mm Round flat washer 25x1.5mm, 6mm hole	cm	2	Spool Insuator ANSI 53-2
tpm	2	Three phase meter mounting bracket	da	2	Spool Insulator support
ss1	2	Meter mounting steel strip 30x3x320 mm			
c31	6	8mm Rawal anchor bolt 8mm dia x 60mm			
aw8	10	8mm Spring washer for 8mm bolt			
c8	4	8mm bolt			
d8	12	8mm Round washer			
P	4	Compression connector Piercing			

SERVICE UNIT FOR WALL MOUNT 1 Ø METER CONGESTED AREA

DRAWN BY:	ASAD ABBAS	REV

USAID FROM THE AMERICAN PEOPLE	USAID POWER DISTRIBUTION PROGRAM	Drawing No. K10-W1

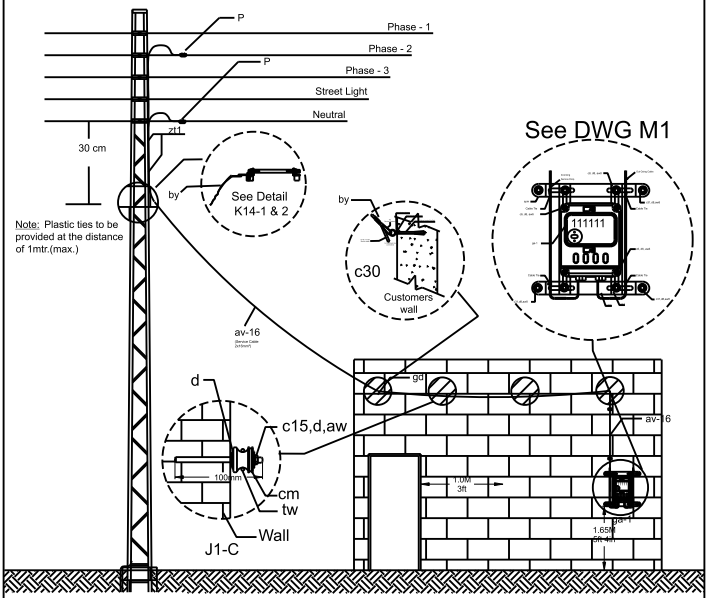

Guide M1
K10-P3

ITEM	K10-W1	DESCRIPTION	ITEM	K10-W1	DESCRIPTION
av16	(____M)	Service cable 2 x 16 mm²	by	2	Service cable deadend
ga-1	1	Single phase meter	c30	1	Rawal eyebolt Ø8 mm x 100 mm
c6	4	Machine bolt Ø6 mm x required length & nuts	gd	3	PVC cable clamp
d6	8	Round flat washer Ø6 mm x 25 mm x 1.5 mm	p	2	Service connector
aw6	4	Spring washer Ø6 mm	zt1	16	Zip tie 6 mm x required length
spm	2	Single phase meter mounting bracket			
ss1	2	Meter mounting steel strap 30x3x250			
c31	4	Rawal anchor bolt Ø8 mm x 60 mm			
c8	4	8mm bolt & nuts			
d8	12	8mm Flat washer			
aw8	8	8mm Spring washer			

SERVICE UNIT FOR WALL MOUNT 1 Ø METER

DRAWN BY:	ASAD ABBAS	REV

USAID FROM THE AMERICAN PEOPLE	USAID POWER DISTRIBUTION PROGRAM	Drawing No. K10-W2

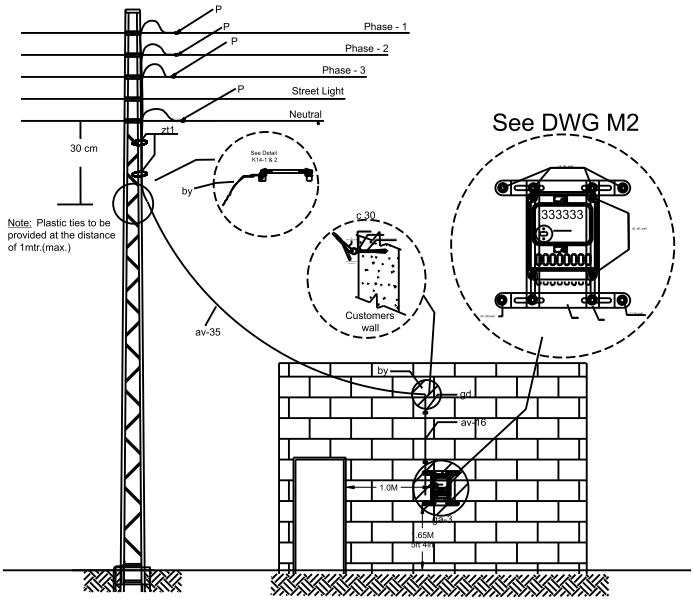

Guide M1
K10-W2

ITEM	K10-W2	DISCRIPTION	ITEM	K10-W2	DISCRIPTION
av35	(____mtr)	Service cable 4 x 35 mm²	c31	4	Rawal anchor bolt Ø8 mm x 60 mm
ga-3	1	Three phase meter	by	2	Service cable deadend (AAC 3.5 x 1)
c6	4	6mm Machine bolt & nuts	zt1	17	Zip tie 6 mm x required length
aw6	4	6mm Spring washer Ø6 mm	p	4	Service connector P&G S-117
d6	8	6mm Round flat washer Ø6 mm x 25 mm x 1.	gd	3	PVC cable clamp
tpm	2	Three phase meter mounting bracket			
SS1	2	Meter mounting steel strap			
c8	4	8mm bolt			
d8	12	8mm Flat washer			
aw8	8	8mm Spring washer			
c30	1	Rawal eyebolt Ø8 mm x 100 mm			

SERVICE UNIT FOR WALL MOUNT 3 Ø METER

DRAWN BY:	ASAD ABBAS	REV

USAID FROM THE AMERICAN PEOPLE	USAID POWER DISTRIBUTION PROGRAM	Drawing No. K10-W3

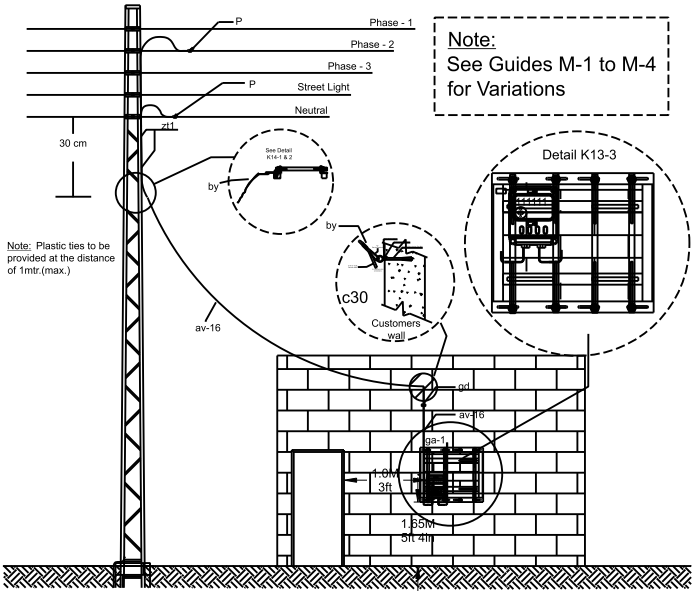

Guide M1
K10-W3

ITEM	K10-W3	DISCRIPTION
av16	(____M)	Service cable 2 x 16 mm²
ga-1	1	Single phase meter
c6	4	6mm Machine bolt & nuts
aw6	4	Spring washer Ø6 mm
d6	8	Round flat washer Ø6 mm x 25 mm x 1.5 mm
c30	1	Rawal eyebolt Ø8 mm x 100 mm
gd	3	PVC cable clamp
zt1	17	Zip tie 6 mm x required length
p	2	Service connector P&G S-117
by	2	Service cable deadend (AAC 3.5 x 1)

SERVICE UNIT FOR WALL MOUNT 1 Ø METER ON K13-3

DRAWN BY:	ASAD ABBAS	REV

USAID FROM THE AMERICAN PEOPLE	USAID POWER DISTRIBUTION PROGRAM	Drawing No. K10-W4

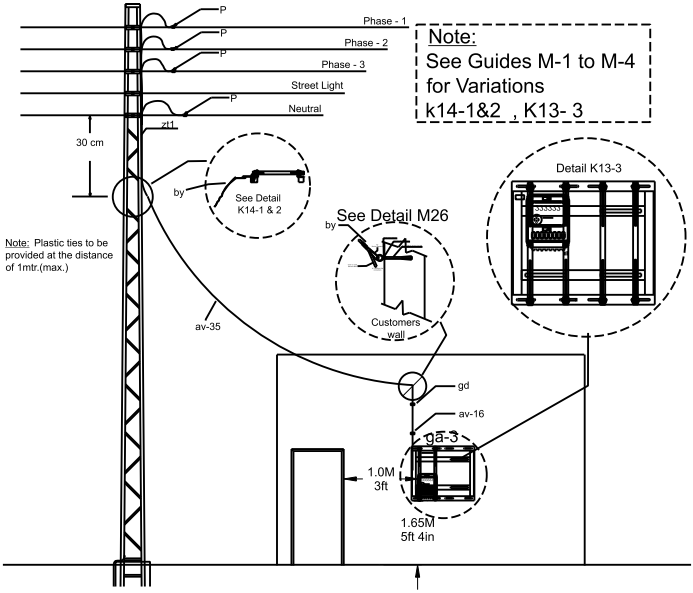

* As required

** Maximum unsupported distance from pole to customer attachment point is15 meters

ITEM	K10-W4	DESCRIPTION	ITEM	K10-W4	DESCRIPTION
av35	(____M)	Service cable 4 x 35 mm²	by	2	Service cable deadend
ga-3	1	Three phase meter	gd	3	PVC cable clamp
umm	1	Universal meter mounting bracket	zt1	14	Zip tie 6 mm x required length
ss	4	SS bracket	c	4	8mm Rawal Ø8 mm x 60 mm
c6	8	6mm Machine bolt	aw8	4	8mm Spring washer
aw6	8	6mm Spring washer			
d6	16	6mm Round flat washer			
c30	1	Rawal eyebolt Ø8 mm x 100 mm			
p	4	Service connector P&G -S117			

SERVICE UNIT FOR WALL MOUNT
3 Ø METER ON K13-3

DRAWN BY:	ASAD ABBAS	REV

USAID FROM THE AMERICAN PEOPLE	USAID POWER DISTRIBUTION PROGRAM	Drawing No. K10-W3C

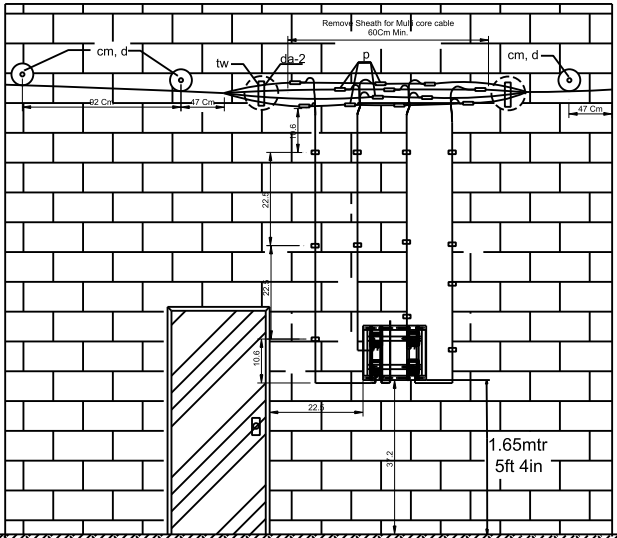

ITEM	Qty:	Description	ITEM	Qty:	Description

SERVICE UNITS FOR MULTIPLE WALL MOUNT
METER IN A CONGESTED AREA

DRAWN BY:	ASAD ABBAS	REV

USAID FROM THE AMERICAN PEOPLE	USAID POWER DISTRIBUTION PROGRAM	Drawing No. K13-1

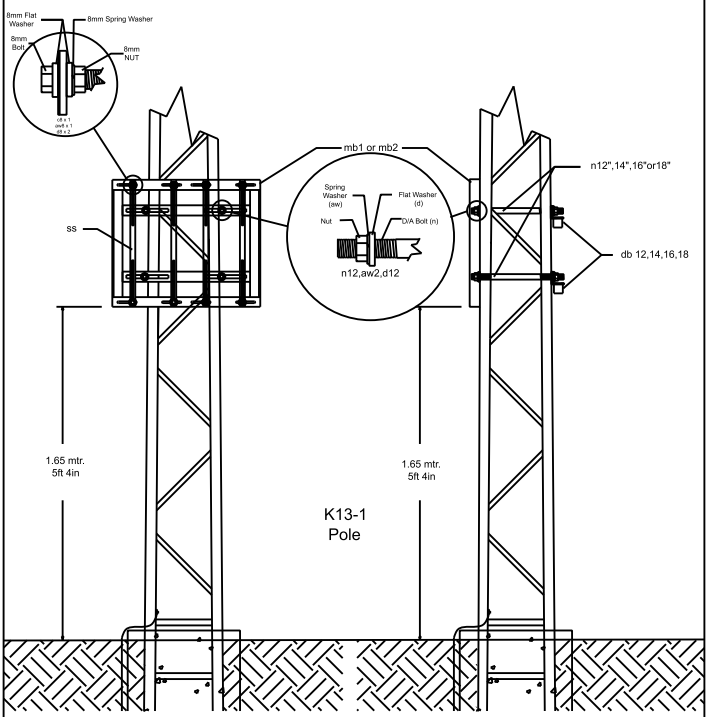

CODE	ITEM	K13-1				Description
	c8	8				8mm bolt
	aw8	8				8mm Spring washer
	d8	16				8mm Flat washer
		8				8mm Nut
	n11	4				12mm Double Arming Bolt Ø 12 mm x L Required Length mm w/ nuts
	aw2	8				12mm Spring washer
	d12	8				12mm Flat washer
	aw	2				12mm Flat washer
	db	2				Deadend Bracket
	ss	4				SS bracket
	mb	1				Universal Meter Mount Bracket

UNIVERSAL METER MOUNT (1 Frame)

DRAWN BY:	ASAD ABBAS	REV

USAID
FROM THE AMERICAN PEOPLE

USAID POWER DISTRIBUTION PROGRAM

Drawing No.
K13-2

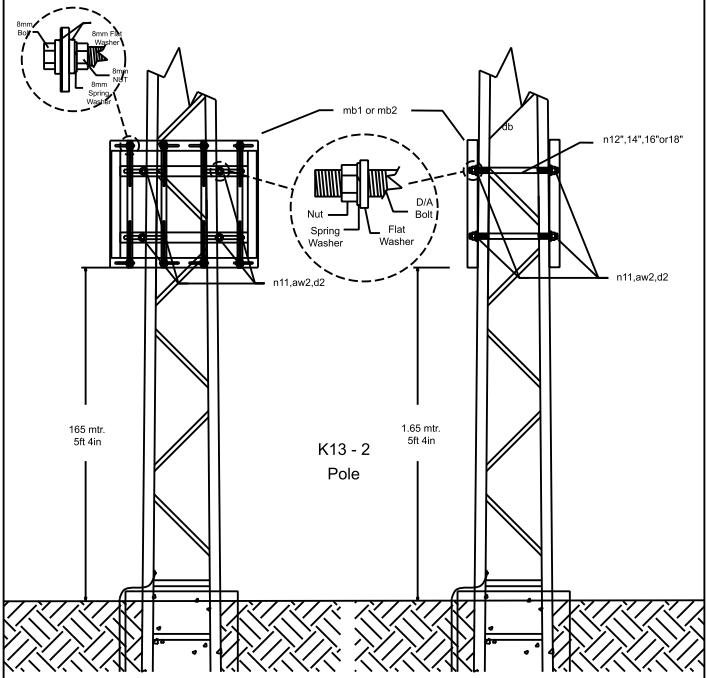

CODE	ITEM	K13-2				Description
	mb	2				Universal Meter Mount Bracket
	ss	4				ss bracket
	c8	8				8mm Bolts x 50mm & nuts
	aw8	8				8mm Spring washer
	d8	16				8mm Nuts - Flat washers
	n11	4				12mm Double Arming Bolt Ø 12 mm x L Required Length mm w/ nuts - galvanized
	aw2	8				12mm Spring washer
	d12	8				12mm - Flat washers

UNIVERSAL METER MOUNT

DRAWN BY:	ASAD ABBAS	REV

USAID FROM THE AMERICAN PEOPLE	USAID POWER DISTRIBUTION PROGRAM	Drawing No. K13-3

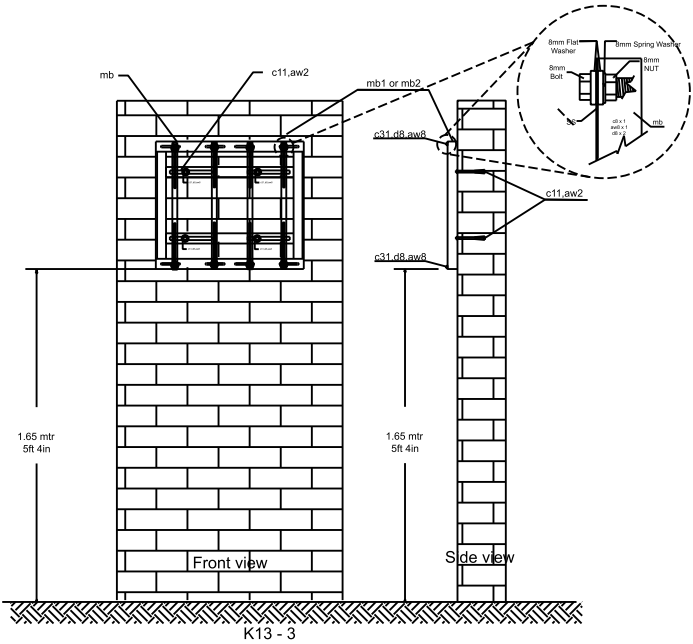

K13 - 3

CODE	ITEM	K13-3				Description
	mb	2				Universal Meter Mount Bracket
	c11	4				Rawal Anchor Bolt Ø 8 mm x 100 mm
	ss	4				ss bracket
	c8	8				8mm Bolts x 50mm & nuts
	aw8	8				8mm Spring washer
	aw2	12				Spring washer 12 mm
	d8	16				8mm Nuts - Flat washers

UNIVERSAL METER MOUNT (Wall)

DRAWN BY:	ASAD ABBAS	REV

USAID FROM THE AMERICAN PEOPLE	USAID POWER DISTRIBUTION PROGRAM	Drawing No. K13-4

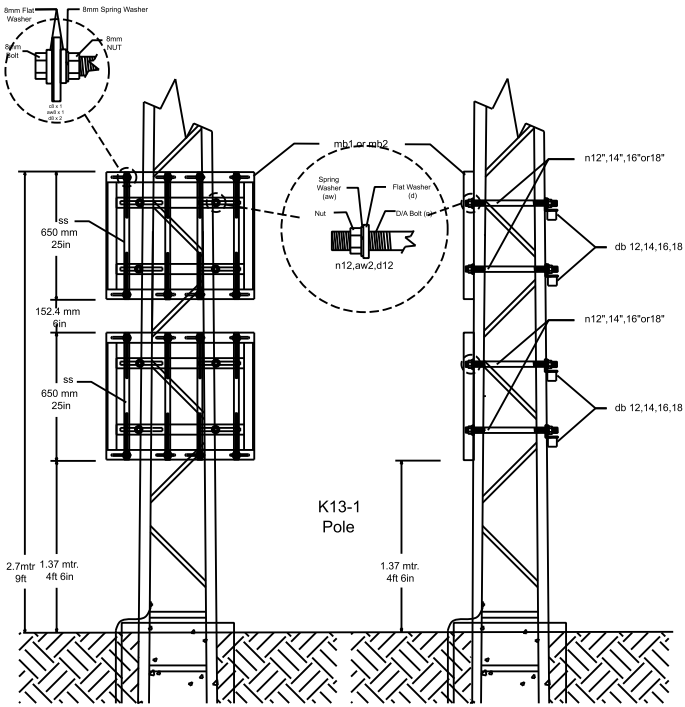

CODE	ITEM	K13-1				Description
	c8	8				8mm bolt
	aw8	8				8mm Spring washer
	d8	16				8mm Flat washer
		8				8mm Nut
	n11	4				12mm Double Arming Bolt Ø 12 mm x L Required Length mm w/ nuts
	aw2	8				12mm Spring washer
	d12	8				12mm Flat washer
	aw	2				12mm Flat washer
	db	2				Deadend Bracket
	ss	4				SS bracket
	mb	1				Universal Meter Mount Bracket

UNIVERSAL METER MOUNT (1 Frame)

DRAWN BY:	ASAD ABBAS	REV

USAID FROM THE AMERICAN PEOPLE	USAID POWER DISTRIBUTION PROGRAM	Drawing No. K13-5

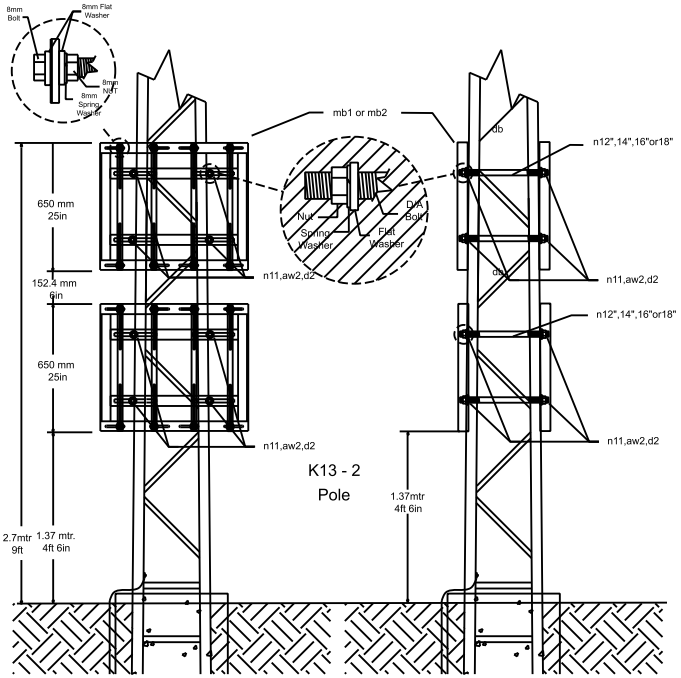

CODE	ITEM	K13-2				Description
	mb	2				Universal Meter Mount Bracket
	ss	4				ss bracket
	c8	8				8mm Bolts x 50mm & nuts
	aw8	8				8mm Spring washer
	d8	16				8mm Nuts - Flat washers
	n11	4				12mm Double Arming Bolt Ø 12 mm x L Required Length mm w/ nuts - galvanized
	aw2	8				12mm Spring washer
	d12	8				12mm - Flat washers

UNIVERSAL METER MOUNT

DRAWN BY:	ASAD ABBAS	REV

USAID FROM THE AMERICAN PEOPLE	USAID POWER DISTRIBUTION PROGRAM	Drawing No. K14-1, K14-2, K14-3

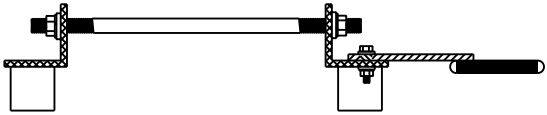

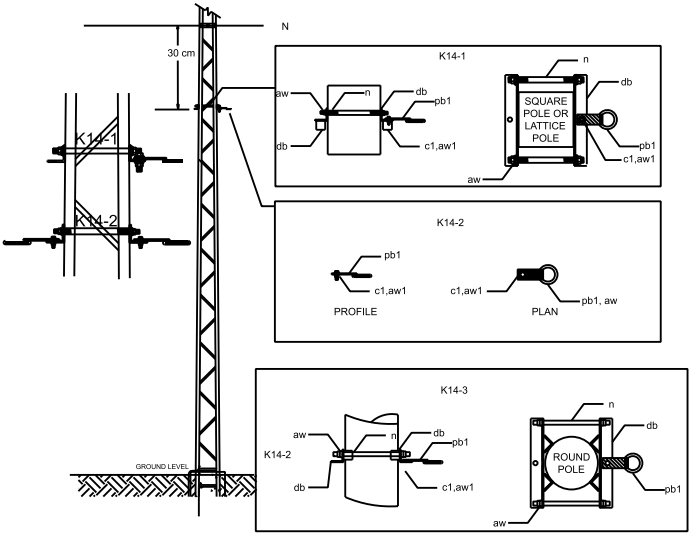

CODE	ITEM	K14-1	K14-2			Description
IRGMI 0116	c1	1	1			12mm - Machine Bolt Ø 12 mm x 25 mm
IRGMI 0121	pb1	1	1			Service Dead End Bracket (pb1)
IRGMI 0119	n	2				12mm - Double Arming Bolt Ø 12 mm x L Required Length mm w/ nuts
IRGMI 0122	db	2				Dead End Bracket(db)
IRGMI 0169	aw	5	1			12mm - Spring washer 12 mm
IRGMI 0170	d	6	1			12mm - Flat washer 12mm

SERVICE UNITS FOR TAKE OFF ON POLE

DRAWN BY:	ASAD ABBAS	REV

USAID FROM THE AMERICAN PEOPLE	USAID POWER DISTRIBUTION PROGRAM	Drawing No. K20-P1

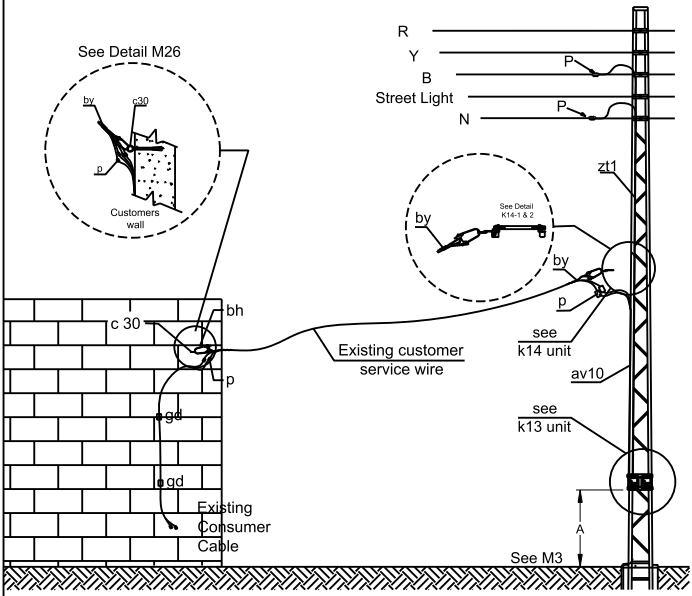

ITEM	Qty:	DESCRIPTION	IRG ST.CODE	ITEM	QTY:	DESCRIPTION	IRG ST.CODE
av10	15	2x10mm² SID service cable	IRGMI0107	gd	3	PVC cable clamp with nail, 5/8" dia cable	IRGMI0416
aw6	4	Spring washer for 6mm bolt, stainless steel	IRGMI0405	p	1	Compression connector sized for bare LT neutral and service conductor	IRGCA0335
by	2	Insulated service deadend for ABC conductor 14-24mm dia	IRGCA0520		1	PG connector sized for bare LT Phase and service conductor	IRGCA0493
c30	1	Rawal eyebolt 8mm x 100 mm	IRGMI0415		2	Insulation piercing connectors for ABC LT and service conductors - Use only on ABC LT	IRGCA0451
c6	4	Machine bolt M6 x 25mm Stainless Steel	IRGMI0414		2	Insulated service drop tubular compression connectors	IRGCA0346
d6	4	Round flat washer 15x1.5mm w 6mm hole, SS	IRGMI0283				
ga-1	1	Single Phase 240V 10 / 40amp whole current meter	IRGMI0403				
				zt1	15	Zip/Cable Tie 4.8mm 300mm	IRGMI0110

SERVICE UNIT FOR POLE MOUNT 1 Ø METER

DRAWN BY:	ASAD ABBAS	REV

USAID FROM THE AMERICAN PEOPLE	USAID POWER DISTRIBUTION PROGRAM	Drawing No. K20-P2

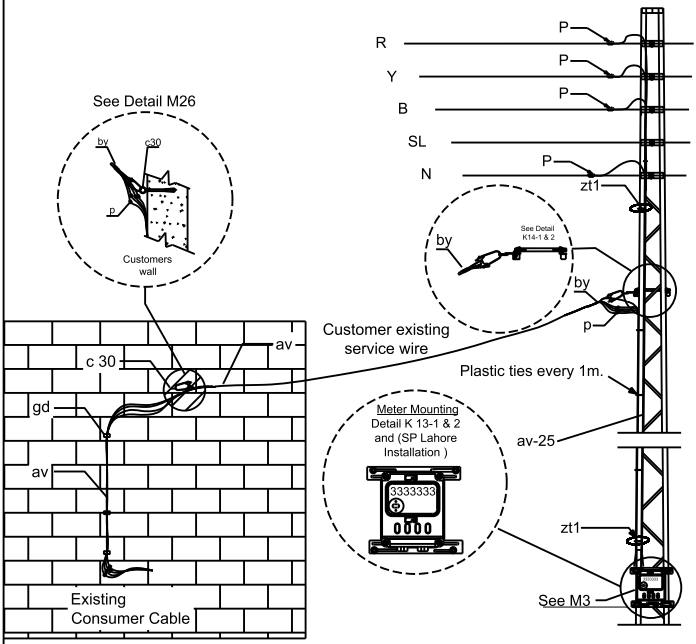

ITEM	Qty:	DESCRIPTION	IRG ST.CODE	ITEM	QTY:	DESCRIPTION	IRG ST.CODE
av25	15	4x25mm² SID service cable	TBD	gd	3	PVC cable clamp w screw for 1.125" dia cable	IRGMI0111
aw6	4	Spring washer for 6mm bolt, stainless steel	IRGMI0405	p	1	Compression connector sized for bare LT neutral and service conductor	IRGCA0335
by	2	Insulated service deadend for ABC conductor 14-24mm dia	IRGCA0520		3	PG connector sized for bare LT Phase and service conductor	IRGCA0493
c30	1	Rawal eyebolt 8mm x 100 mm	IRGMI0415		4	Insulation piercing connectors for ABC LT and service conductors - Use only on ABC LT	IRGCA0451
c6	4	Machine bolt M6 x 25mm Stainless Steel	IRGMI0414				
d6	4	Round flat washer 15x1.5mm w 6mm hole, SS	IRGMI0283				
ga-3	1	Three Phase 415 / 240V 100A whole current meter	IRGMI0403		4	Insulated service drop tubular compression connectors	IRGCA0496
				zt1	15	Zip/Cable Tie 4.8mm 300mm	IRGMI0110

SERVICE UNIT FOR POLE MOUNT 3 Ø METER

DRAWN BY:	ASAD ABBAS	REV

USAID FROM THE AMERICAN PEOPLE	USAID POWER DISTRIBUTION PROGRAM	Drawing No. K20-W1

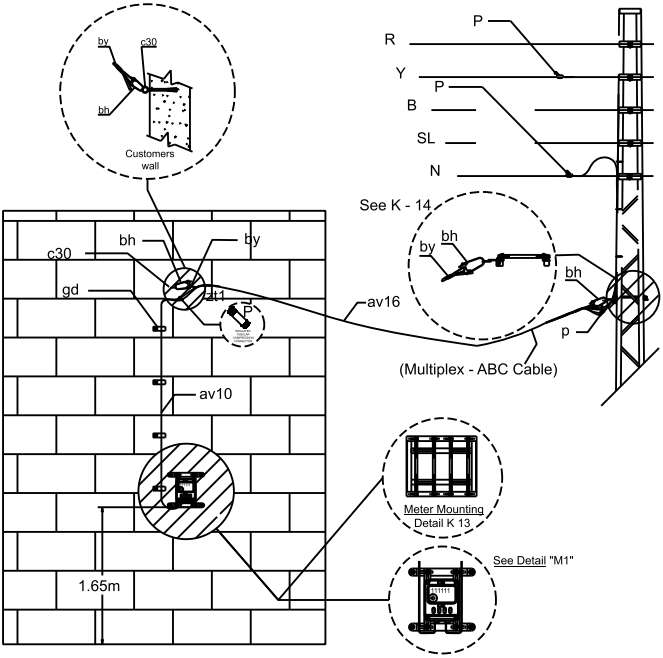

ITEM	QTY:	DESCRIPTION	SOURCE	ITEM	QTY:	DESCRIPTION	SOURCE
av16	15	Duplex 2x16mm² AAAC/AAC, Vizsla, mtr	IRGCA0260	d8	4	Round flat washer 25x1.5mm, 8mm hole	IRGMI0408
av10	3	SID 2x10 mm² PVC	IRGMI0107	ga1	1	Single phase meter	IRGMI0403
aw6	8	6mm Spring washer for 6mm bolt	IRGMI0405	gd	3	Steel tab type cable clamp w anchor & screw	IRGMI0416
bh	2	Insulated service clevis, bail type	IRGCA0300	p	1	Bolted PG connector for phase	IRGCA493
by	2	Preformed service deadend - Vizsla	IRGCA0285	p	1	Compression connector for neutral	IRGCA335
c6	8	Machine bolt 6mm dia x 25mm	IRGMI0414	p	2	Insulated service connectors, compression type	IRGCA0495
c30	1	8mm Rawal eyebolt Ø8 mm x 100 mm	IRGMI0415	spm	2	Single phase meter mounting bracket	IRGMI0124
c31	4	8mm Rawal anchor bolt Ø8 mm x 60 mm	IRGMI0413	ss1	2	Meter mounting steel strip 30x3x325mm	IRGMI0281
d6	8	Round flat washer 25x1.5mm, 6mm hole	IRGMI0407	zt1	2	Zip tie 6mmx180mm	

SERVICE UNIT FOR WALL MOUNT 1 Ø METER

DRAWN BY:	ASAD ABBAS	REV

USAID FROM THE AMERICAN PEOPLE

USAID POWER DISTRIBUTION PROGRAM

Drawing No. K20-W2

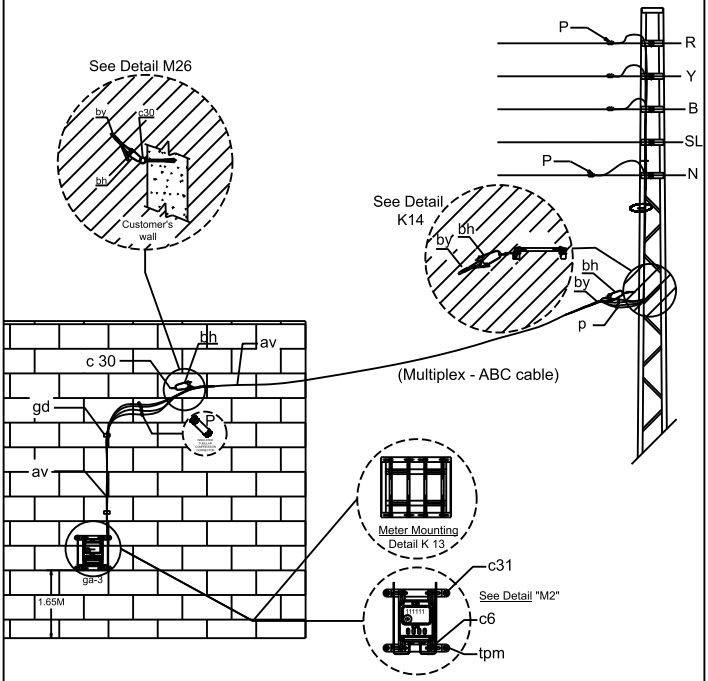

ITEM	QTY:	DESCRIPTION	SOURCE	ITEM	QTY:	DESCRIPTION	SOURCE
av	15	Duplex 2x6mm² AAAC/AAC, Vizsla, mtr	IRGCA0266	d8	4	Round flat washer 25x1.5mm, 8mm hole	IRGMI0408
av25	4	SID cable 4x25mm², mtr		ga3	1	Three phase meter	IRGMI097
aw6	4	6mm Spring washer for 6mm bolt	IRGMI0405	gd	3	Steel tab type cable clamp w anchor & screw	IRGMI0112
bh	2	Insulated service clevis, bail type	IRGCA0300	p	1	Bolted PG connector for phase	IRGCA493
by	2	Preformed service deadend - Belgian	IRGCA0286	p	3	Compression connector for neutral	IRGCA335
c6	8	Machine bolt 6mm dia x 25mm	IRGMI0414	p	4	Insulated service connectors, compression type	IRGCA0492
c30	1	8mm Rawal eyebolt Ø8 mm x 100 mm	IRGMI0415	spm	2	Three phase meter mounting bracket	IRGMI0123
c31	4	8mm Rawal anchor bolt Ø8 mm x 60 mm	IRGMI0413	ss1	2	Meter mounting steel strip 30x3x325mm	IRGMI0281
	8	Round flat washer 25x1.5mm, 6mm hole	IRGMI0407	zt1	6	Zip tie 6mmx180mm	IRGAMR391

SERVICE UNIT FOR WALL MOUNT 3 Ø METER

DRAWN BY: ASAD ABBAS REV

USAID FROM THE AMERICAN PEOPLE	USAID POWER DISTRIBUTION PROGRAM	Drawing No. M5

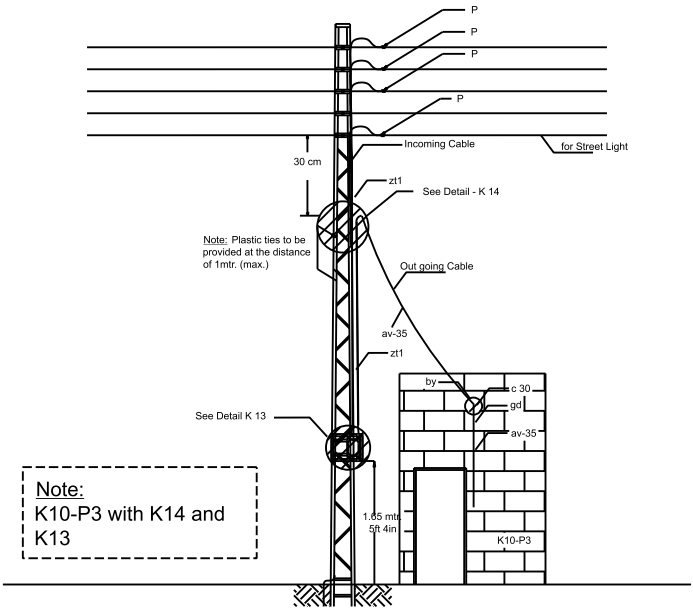

Note:
K10-P3 with K14 and K13

CODE	ITEM	K10-P1	K10-P3			Description
	av16	*	*			Service Cable 2 x 16 mm²
	av35	*	*			Service Cable 4 x 35 mm²
	p	2	4			Compression Connector
	ga-1	1				Single Phase Meter
	ga-2		1			Three Phase Meter
	gd	3	3			PVC Cable Clamp
	c6	8	8			Machine Bolt Ø 6 mm x required length
	c30	1	1			Rawal Eyebolt Ø 8 mm x 100 mm
	by	3	3			Service Cable Deadend
	tpm					Three Phase Meter Mount Bracket
	spm					Single Phase Meter Mount Bracket
	d6	8	8			Round Flat Washer Ø 6 mm x 25 mm x 1.5 mm
	aw6	8	8			Spring Washer Ø 6 mm
	umm	1	1			Universal Meter Mount Bracket
	zt1	25	25			Zip Tie

SERVICE DROP POLE MOUNT

DRAWN BY:	ASAD ABBAS	REV

USAID FROM THE AMERICAN PEOPLE	USAID POWER DISTRIBUTION PROGRAM	Drawing No. M7

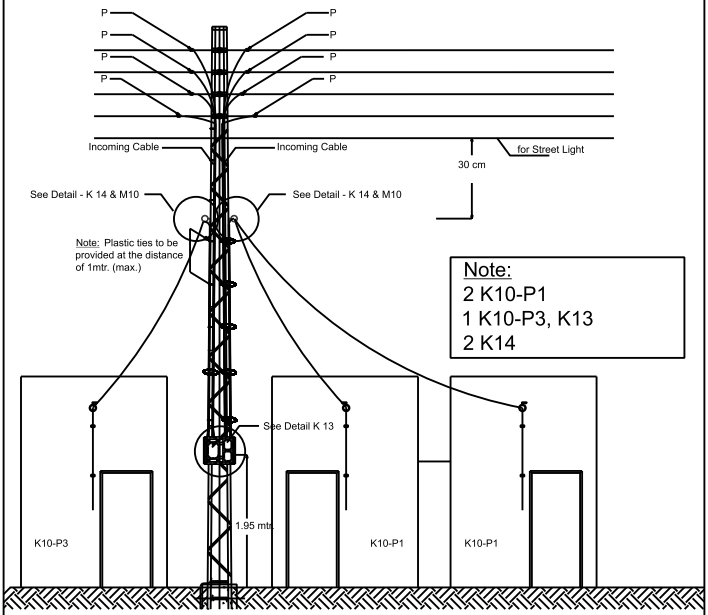

Note:

1) The K14 service unit is required for services that are less than 15 meters from DISCO pole to the service attachment point of the consumer

2) This guide illustrates the use of the K15, K14 (pole service take-off unit) with K13-1 with multiple service unit K10-W unit

3) Note that the K13-1 in this illustration serves three consumers. if more consumers were connected to this pole, then additional K13 units would be added to the pole

4) The bottom of the meter is 1.95m. from ground level

GUIDE FOR MULTIPLE K10-P UNITS WITH A K14 UNITS

DRAWN BY:	ASAD ABBAS	REV

USAID FROM THE AMERICAN PEOPLE	USAID POWER DISTRIBUTION PROGRAM	Drawing No. M10

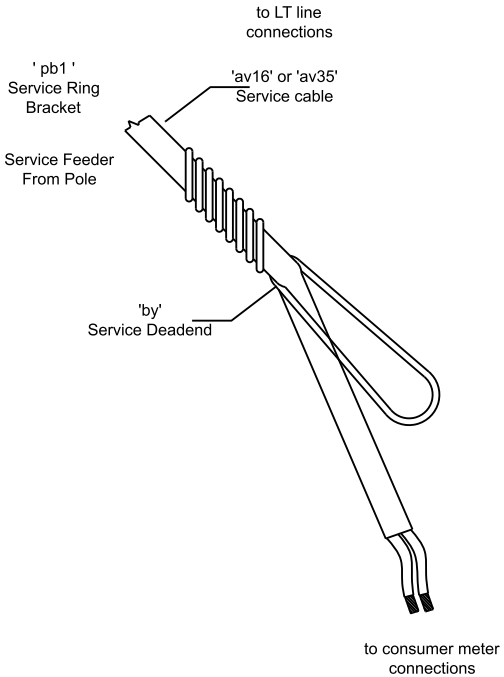

Note:

1) The service deadend 'by' is served around the service cable 'av35' tightly. The service deadend supports the cable between the pole and the consumers attachment point (usually an kawal eyebolt)

2) Multiple services may be deadended on the service bracket ring

3) The service conductor should be fully supported by the service deadend and not rub, or drape over any building surface or other LT support

SERVICE BRACKET RING AND SERVICE DEADEND GUIDE		
DRAWN BY:	ASAD ABBAS	REV

USAID FROM THE AMERICAN PEOPLE	USAID POWER DISTRIBUTION PROGRAM	Drawing No. M26

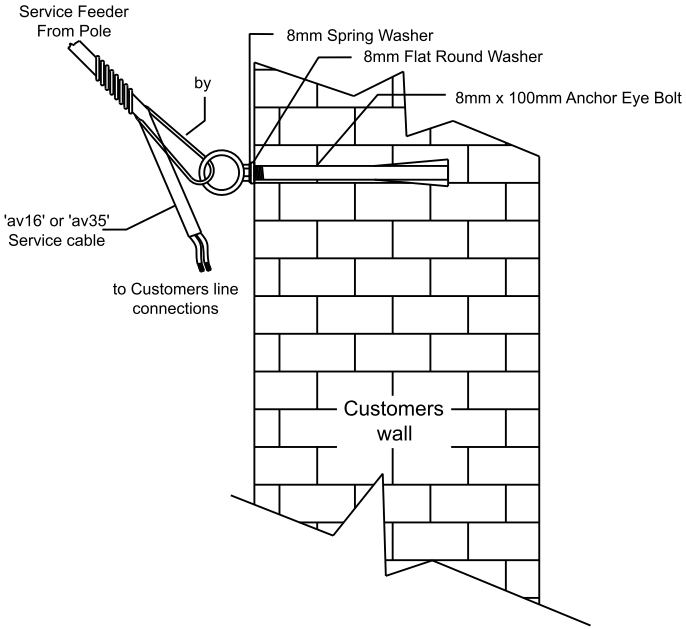

Note:

1) The K14 service unit is required for services that are less than 15 meters from DISCO pole to the service attachment point of the consumer

2) This guide illustrates the use of the K15, K14 (pole service take-off unit) with K13-1 with multiple service unit K10-W unit

3) Note that the K13-1 in this illustration serves three consumers. if more consumers were connected to this pole, then additional K13 units would be added to the pole

4) The bottom of the meter is 1.95m. from ground level

Service Deadend		
DRAWN BY:	ASAD ABBAS	REV

USAID FROM THE AMERICAN PEOPLE	USAID POWER DISTRIBUTION PROGRAM	Drawing No. M27

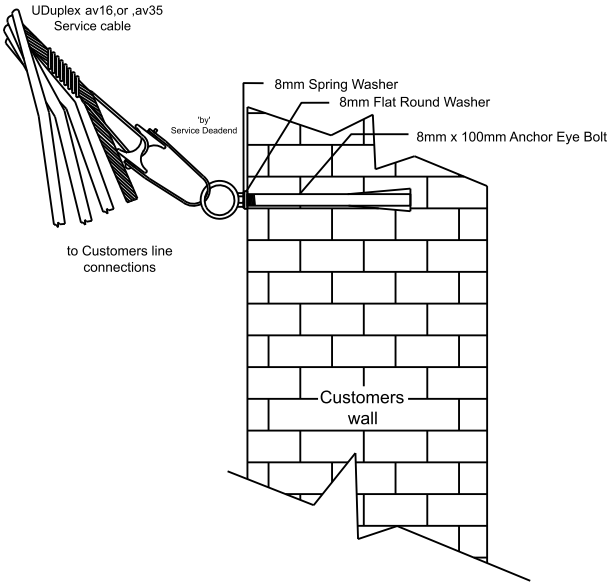

Note:

1) The K14 service unit is required for services that are less than 15 meters from DISCO pole to the service attachment point of the consumer

2) This guide illustrates the use of the K15, K14 (pole service take-off unit) with K13-1 with multiple service unit K10-W unit

3) Note that the K13-1 in this illustration serves three consumers. if more consumers were connected to this pole, then additional K13 units would be added to the pole

4) The bottom of the meter is 1.95m. from ground level

Service Deadend For Duplex Cable		
DRAWN BY:	ASAD ABBAS	REV

USAID FROM THE AMERICAN PEOPLE	USAID POWER DISTRIBUTION PROGRAM	Drawing No. M30

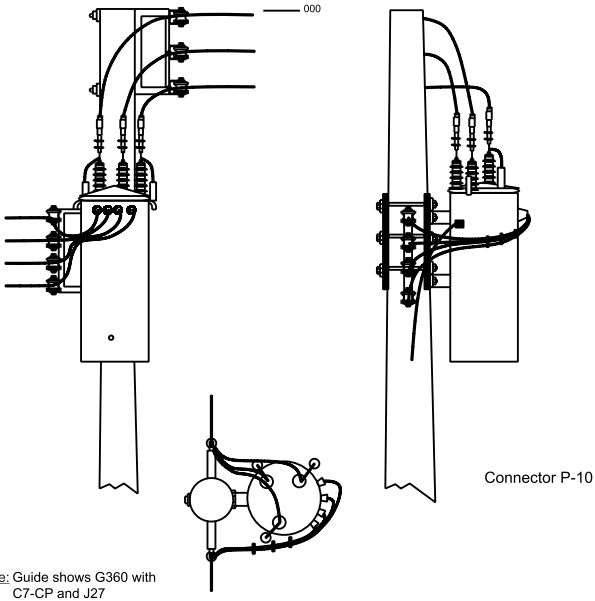

Note: Guide shows G360 with C7-CP and J27

Notes: 1) The P10 connector is fitted to the terminal bolt connector of the HT bushing.
2) The UD cable is terminated and fixed directly into the P10 connector on the HT bushing and the hex screws tightened to 275in-lbs.
3) The cable terminations are separated by approximately 30°. Enough so they do not interfere with one another.
4) Avoid sharp bends in the UD cable. Bends should have a minimum radius of 500 mm or 20 in.
5) All cable bends and forming should have smooth flowing lines.

THREE PHASE CSP TRANSFORMER MOUNTED IN CONGESTED AREA

DRAWN BY:	ASAD ABBAS	REV

USAID FROM THE AMERICAN PEOPLE	USAID POWER DISTRIBUTION PROGRAM	Drawing No. pb1

' pb1 ' Service Ring Bracket

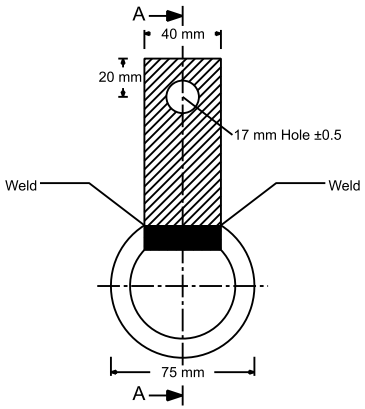

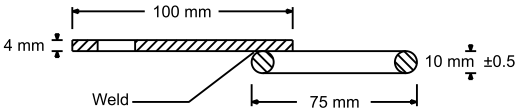

SECTION A-A

NOTE:

1) Fabrication material will be hot-rolled mild steel bar 40 mm wide x 4 mm thick
2) Fabrication material of the ring will be hot rolled 10 mm diameter rod stock
3) Drilled hole will be 17 mm diameter
4) Hole will be drilled before galvanizing
5) All weld seams will be ground smooth before galvanizing
6) Ring will be fully welded to the support bar
7) Bracket will be hot dip galvanized to ASTM A123M
8) Hole will be cleared of galvanizing slag so 16 mm bolt will easily pass through the hole
9) General tolerance 2.5% unless otherwise specified.

SERVICE BRACKET RING FOR USE WITH OFFSET BRACKET

DRAWN BY:	ASAD ABBAS	REV

USAID FROM THE AMERICAN PEOPLE	USAID POWER DISTRIBUTION PROGRAM	Drawing No. Item "sp"

Modified design of "sp" (both ends turned (20mm), 90°)

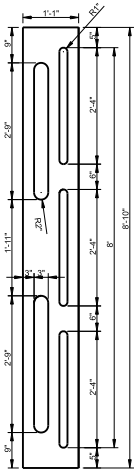

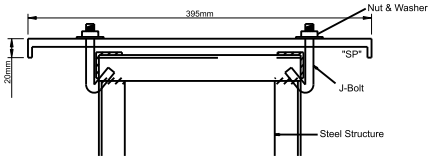

Design for mounting Steel Assembly on latticed steel structure.

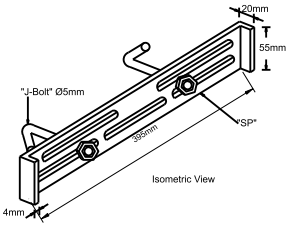

Isometric View

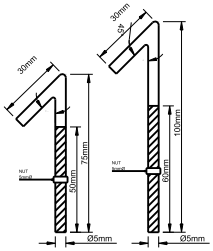

DETAIL OF MATERIAL REQ. FOR 01 ASSEMBLY			
Type of Steel Structure	Material	Item	Qty.
31 Ft.	Steel Strip 435x55x4mm	SP	2
	J-Bolt 3" with Nut	J-1	4
	Flat Washer	J-1	2
	Spring Washer	J-1	2
36 Ft.	Steel Strip 435x55x4mm	SP	2
	J-Bolt 4" with Nut	J-2	4
	Flat Washer	J-1	2
	Spring Washer	J-1	2

NOTE:

1- Fabrication material for meter mounting strip "SP" will be hot rolled mild steel bar 55mm wide x 4mm thick.
2- All slots will be drilled before galvanizing.
3- All slots for "SP" will be 12mm wide for fitting a Ø6mm bolt.
4- Slot will be cleared of galvanizing slag so designated bolts will be easily pass through the slot.
5- Mild Steel J-Bolt 3" & 4" will be 5mm diameter.
6- Meter mounting Strip "SP" will be hot dip galvanized as per applicable ASTM standard.
7- J-Bolts will be electro galvanized.
8- General tolerance 2.5% unless otherwise specified.
9- Hot rolled miled steel assembly for meter mounting on latticed steel structure (31' & 36')

Fixing of Steel Strip on LT/ HT Steel Structure Using J- Bolts

DRAWN BY:	ASAD ABBAS	REV

USAID FROM THE AMERICAN PEOPLE	USAID POWER DISTRIBUTION PROGRAM	Drawing No. Item "ss", "ss1" & "ss2"

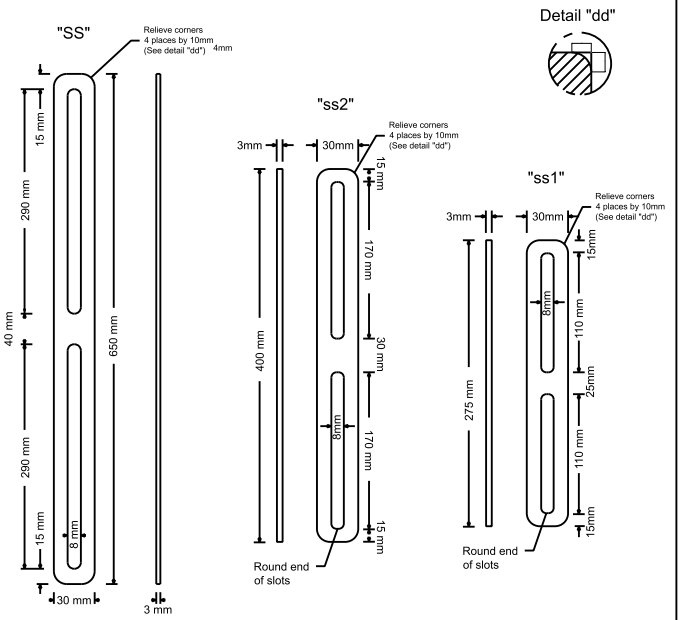

NOTE: 1) Fabrication material for brackets "ss",1&2" will be hot-rolled mild steel bar 30 mm wide x 3 mm thick

2) All slots for "ss", "ss1" & "ss2" will be 8 mm wide for fitting up to a 6 mm bolt

3) All slots will be drilled before galvanizing

4) Slots will be cleared of galvanizing slag so designated bolt will easily pass through the slot

5) "ss", "ss1" & "ss2" shall be hot dip galvanized to a thickness of 86 microns per ASTM A153M.

6) General tolerance 2.5% unless otherwise specified.

METER BASE MOUNTING BRACKETS		
DRAWN BY:	ASAD ABBAS	REV

USAID FROM THE AMERICAN PEOPLE	USAID POWER DISTRIBUTION PROGRAM	Drawing No. Item 'spm'

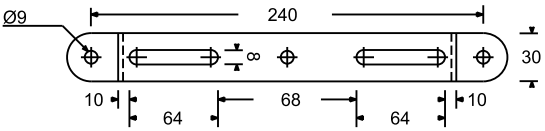

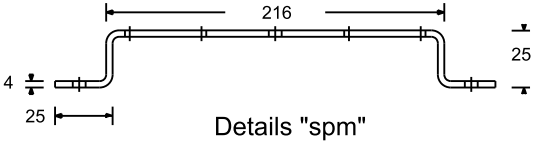

Details "spm"

(For Single Phase Meter)

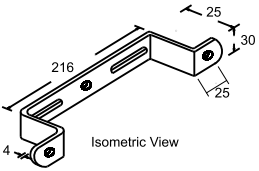

NOTE: All dimensions are in mm.

NOTE:

1) Frabication material for bracket "spm" will be hot rolled mild steel bar 30 mm wide x 4 mm thick
2) All slots will be drilled before galvanizing
3) All slots for "spm" will be 8 mm wide for fitting a 6 mm bolt
4) Slots will be cleared of galvanizing slag so designated bolts will be easily pass through the slot
5) Bracket will be hot dip galvanized as per applicable ASTM standard
6) General tolerance 2.5% unless otherwise specified.

METER BASE MOUNTING BRACKETS

DIGITIZED BY:	ASAD ABBAS	REV

USAID FROM THE AMERICAN PEOPLE	USAID POWER DISTRIBUTION PROGRAM	Drawing No. C10-CAP

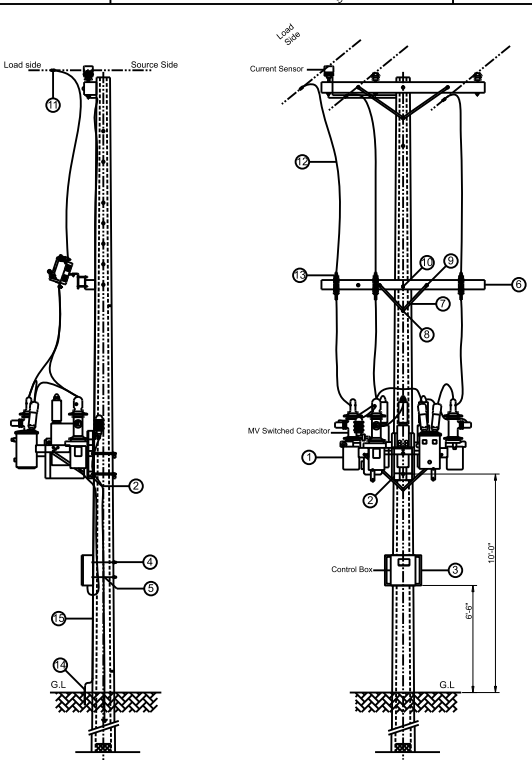

Side Elevation **Front Elevation**

Note: Properly earth the current sensor, Capacitor and control box.

ITEM	QTY:	DESCRIPTION	ITEM	QTY:	DESCRIPTION
1	1	MV. Switched Capacitor	9	2	MS bolt ;" x 6"
2	1	Single edge platform (only two short channels will be used)	10	2	MS bolt ;" x 6" (Structure) ;" x 14" (Spun)
3	1	Universal meter mounting bracket (mb2)	11	3	PG Connectors (T-155)
4	2	Dead end bracket 14"	12	21 mtrs.	ACSR Rabbit conductor
5	4	Double arming bolts M12 x 14"	13	3	Dropout Cutouts
6	1	Wooden crossarm	14	1	Earth rod
7	2	Knee braces	15	16 Kg	Stay wire 10mm
8	1	MS bolt ;" x 2" (Structure) ;" x 12" (Spun)			

MEDIUM VOLTAGE SWITCHED CAPACITOR

DIGITIZED BY:	ASAD ABBAS	REV

USAID
FROM THE AMERICAN PEOPLE

USAID POWER DISTRIBUTION PROGRAM

Drawing No.
M7-1

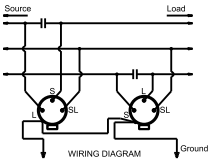

WIRING DIAGRAM

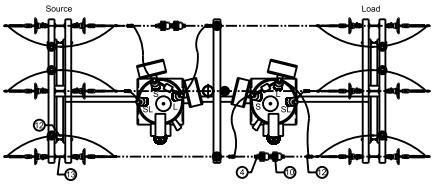

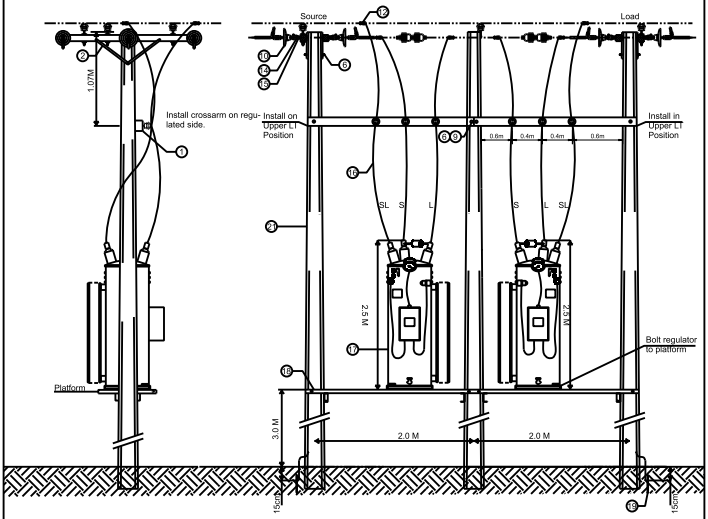

Note: Net weight of 200 Amps Voltage Regulator = 1211 Kg.
Buckling Load of 45' Spun Pole = 1364 Kg.
Buckling Load of 40' Structure= 2700 Kg.

Note: Either use 3 Nos. of 45' Spun poles or 3 Nos. of 40' Structure.

ITEM	QTY:	DESCRIPTION	ITEM	QTY:	DESCRIPTION
1	7	Wooden Crossarm	12	12	P.G clamp (T-155)
2	10	Crossarm brace	13	6	Double arming bolt ;" x 16"
3	15	11kV pin type insulator	14	12	Anchor Shackle
4	15	Insulator pin	15	12	Eye nut
5	10	M.S bolt ;" x 6"	16	21mtr.	ACSR Dog conductor
6	6	M.S bolt ;" x 10"	17	2	11 kV Single phase, Voltage regulator (200 Amps)
7	1	M.S bolt ;" x 12"	18	2	Double edge plate form
8	10	Round Washer 1;" dia w ;" hole	19	2	Earth rods
9	21	Square washer 2 ;" w ;" hole	20	16k	Stay wire 10mm
10	16	11 kV Disc Insulator	21	3	H.T Spun pole 45'
11	14	Deadend Clamp (for DOG conductor)			

VOLTAGE REGULATOR SINGLE PHASE, (200 Amps)

DIGITIZED BY:	ASAD ABBAS	REV

USAID FROM THE AMERICAN PEOPLE	USAID POWER DISTRIBUTION PROGRAM	Drawing No. M7-2

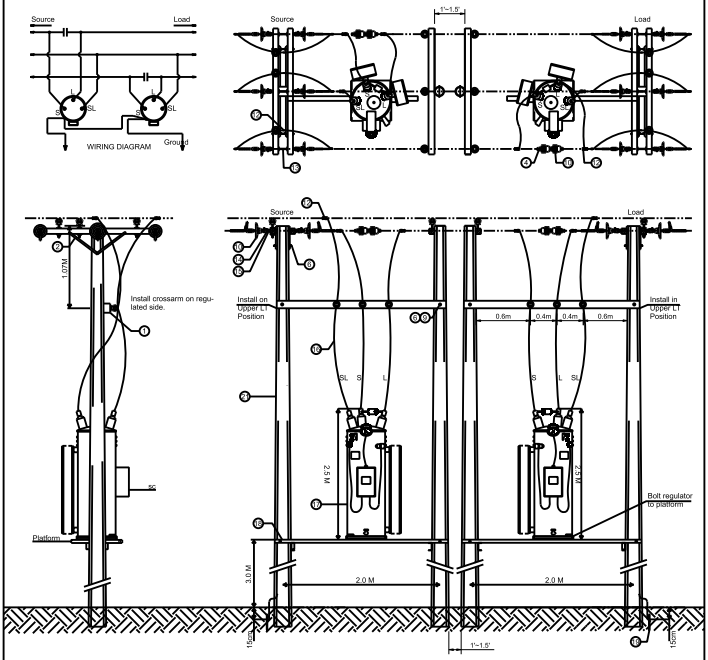

Note: Net weight of 400 Amps Voltage Regulator = 2059 Kg.
Buckling Load of 45' Spun Pole = 1364 Kg.
Buckling Load of 40' Structure= 2700 Kg.

NOTE: Distance between two central pole should be 1' ~ 1.5'.

Note: Either use 3 Nos. of 45' Spun poles or 3 Nos. of 40' Structure.

ITEM	QTY:	DESCRIPTION	ITEM	QTY:	DESCRIPTION
1	8	Wooden Crossarm	12	12	P.G clamp (T-220)
2	12	Crossarm brace	13	6	Double arming bolt ¾" x 16"
3	18	11kV pin type insulator	14	12	Anchor Shackle
4	18	Insulator pin	15	12	Eye nut
5	12	M.S bolt ¾" x 6"	16	21m	ACSR Osprey conductor
6	7	M.S bolt ¾" x 10"	17	2	11 kV Single phase, Voltage regulator (400 Amps)
7	2	M.S bolt ¾" x 12"	18	2	Double edge plate form
8	12	Round Washer 1¼" dia w ¾" hole	19	2	Earth rods
9	22	Square washer 2 ½" w ¾" hole	20	16k	Stay wire 10mm
10	16	11 kV Disc Insulator	21	4	H.T Spun pole 45'
11	14	Deadend Clamp (for Osprey conductor)			

VOLTAGE REGULATOR SINGLE PHASE, (400 Amps)

DIGITIZED BY:	ASAD ABBAS	REV

USAID FROM THE AMERICAN PEOPLE

USAID POWER DISTRIBUTION PROGRAM

Drawing No.

Data Charts

EXHIBIT 6

Sht: 3 OF 4

TABLE 1

PERCENT VOLTAGE DROP FOR

1,000 KVA FOR ONE MILE

11 KV, 50 CYCLES, 54" SPACING

Conductor Code Name	Copper or Aluminum Area (Sq Inches)	CIRCUIT POWER FACTOR 0.95 Leading	1.00	0.95	0.90	0.85	0.80	0.75	0.70
All Aluminum Conductor (AAC)									
GNAT	0.042	1.48	1.74	1.83	1.81	1.78	1.73	1.68	1.62
WEEVIL	0.049	1.23	1.47	1.56	1.55	1.53	1.49	1.45	1.41
ANT	0.082	0.68	0.88	1.01	1.03	1.03	1.02	1.01	1.00
FLY	0.098	0.54	0.74	0.86	0.89	0.90	0.90	0.89	0.88
EARWIG	0.122	0.41	0.60	0.73	0.76	0.78	0.78	0.78	0.78
WASP	0.164	0.26	0.44	0.57	0.61	0.63	0.64	0.65	0.65
HORNET	0.245	0.11	0.30	0.41	0.48	0.51	0.53	0.54	0.55
CHAFER	0.331	0.07	0.22	0.36	0.41	0.44	0.46	0.48	0.49
Aluminum Conductor Steel Reinforced (ACSR)									
SQUIRREL	0.032	1.87	2.15	2.21	2.18	2.12	2.05	1.98	1.90
GOPHER*	0.041	1.51	1.77	1.85	1.83	1.80	1.75	1.69	1.63
WEASEL	0.048	1.22	1.46	1.56	1.55	1.53	1.50	1.46	1.41
FLRRLT	0.077	0.88	1.10	1.21	1.22	1.21	1.18	1.18	1.14
RABBIT*	0.082	0.66	0.88	1.00	1.02	1.01	1.02	1.01	1.00
RACCOON	0.121	0.39	0.59	0.72	0.76	0.78	0.79	0.79	0.79
DOG*	0.163	0.27	0.45	0.58	0.62	0.65	0.66	0.67	0.67
TIGER	0.199	0.20	0.36	0.48	0.51	0.54	0.55	0.56	0.57
LYNX	0.219	0.11	0.26	0.38	0.42	0.45	0.47	0.48	0.49
PANTHER	0.320	0.08	0.22	0.35	0.39	0.42	0.44	0.45	0.46
Copper Conductor									
8 SWG	0.020	1.90	2.19	2.26	2.22	2.16	2.09	2.02	1.94
5 SWG	0.035	1.02	1.25	1.36	1.36	1.15	1.13	1.10	1.26
3 SWG	0.050	0.68	0.88	1.01	1.03	1.03	1.02	1.01	1.00
3/.104	0.025	1.49	1.75	1.84	1.82	1.78	1.73	1.68	1.62
3/.147	0.050	0.68	0.88	1.00	1.02	1.03	1.02	1.01	0.99
7/.116	0.075	0.42	0.61	0.74	0.77	0.79	0.80	0.80	0.79
7/.136	0.100	0.26	0.44	0.57	0.61	0.63	0.65	0.66	0.66
7/.166	0.150	0.13	0.30	0.43	0.48	0.51	0.53	0.54	0.55
7/.193	0.200	0.06	0.21	0.35	0.40	0.43	0.45	0.47	0.48

* Standard conductors for 11 KV construction.

USAID FROM THE AMERICAN PEOPLE	USAID POWER DISTRIBUTION PROGRAM	Drawing No. Data Charts

EXHIBIT 6

Sht: 4 OF 4

TABLE 3

PERCENT VOLTAGE DROP FOR

1,000 KVA FOR ONE MILE

11 KV, 50 CYCLES, 54" SPACING

Conductor Code Name	Copper or Aluminum Area (Sq Inches)	CIRCUIT POWER FACTOR 0.95 Leading	1.00	0.95	0.90	0.85	0.80	0.75	0.70
All Aluminum Conductor (AAC)									
GNAT	0.042	1.56	1.74	1.93	2.02	2.09	2.17	2.24	2.32
WEEVIL	0.049	1.30	1.47	1.64	1.73	1.80	1.87	1.94	2.01
ANT	0.082	0.71	0.88	1.06	1.14	1.21	1.28	1.35	1.42
FLY	0.098	0.57	0.74	0.90	0.98	1.05	1.12	1.19	1.26
EARWIG	0.122	0.43	0.60	0.76	0.84	0.91	0.98	1.05	1.12
WASP	0.164	0.28	0.44	0.60	0.67	0.74	0.80	0.87	0.94
HORNET	0.245	0.14	0.30	0.45	0.53	0.59	0.66	0.72	0.79
CHAFER	0.331	0.67	0.22	0.38	0.45	0.52	0.58	0.64	0.70
Aluminum Conductor Steel Reinforced (ACSR)									
SQUIRREL	0.032	1.97	2.15	2.33	2.42	2.49	2.56	2.64	2.71
GOPHER*	0.041	1.59	1.77	1.95	2.04	2.11	2.18	2.26	2.33
WEASEL	0.048	1.28	1.46	1.64	1.73	1.80	1.87	1.94	2.02
FERRET	0.077	0.85	1.10	1.27	1.35	1.41	1.46	1.55	1.65
RABBIT*	0.082	0.70	0.88	1.85	1.14	1.21	1.28	1.35	1.42
RACCOON	0.121	0.41	0.59	0.76	0.84	0.91	0.98	1.05	1.13
DOG*	0.163	0.28	0.45	0.61	0.69	0.76	0.82	0.89	0.96
TIGER	0.199	0.21	0.36	0.50	0.57	0.63	0.69	0.75	0.81
LYNX	0.239	0.11	0.26	0.40	0.47	0.53	0.58	0.64	0.70
PANTHER	0.320	0.08	0.22	0.36	0.43	0.49	0.55	0.60	0.66
Copper Conductor									
8 SWG	0.020	2.00	2.19	2.38	2.47	2.54	2.62	2.69	2.77
5 SWG	0.035	1.07	1.25	1.43	1.51	1.59	1.65	1.73	1.80
3 SWG	0.050	0.71	0.88	1.06	1.14	1.21	1.28	1.35	1.42
3/.104	0.025	1.57	1.75	1.93	2.02	2.10	2.17	2.24	2.32
3/.147	0.050	0.71	0.88	1.06	1.14	1.21	1.27	1.34	1.42
7/.116	0.075	0.44	0.61	0.78	0.86	0.93	1.00	1.26	1.12
7/.136	0.100	0.28	0.44	0.60	0.68	0.75	0.81	0.41	0.94
7/.166	0.150	0.14	0.30	0.45	0.53	0.59	0.66	0.29	0.72
7/.193	0.200	0.06	0.21	0.37	0.44	0.50	0.56	0.12	0.60

* Standard conductors for 11 KV construction.

USAID FROM THE AMERICAN PEOPLE

USAID POWER DISTRIBUTION PROGRAM

Drawing No. Data Charts

ALUMINUM AND ACSR

CODE NAME Aluminum Conductor	Stranding	Conductor Diameter Inches	Aluminum Sq. Inch	Area Mcm	Copper Equiv. Sq. Inch	Resistance Per Mile Per Phase (2)	Reactance Per Mile Per Phase 54"/15" GMD	Capacity (3) Amps
Gant** (1)	7/.087	0.261	0.042	52.9	0.025	2.11	0.68/0.48	80/130
Weevil	3/.144	0.310	0.049	62.2	0.030	1.78	0.64/0.46	95/140
Ant**	7/.122	0.366	0.082	104.2	0.050	1.07	0.64/0.45	135/200
Fly	7/.134	0.402	0.098	125.7	0.060	0.89	0.62/0.44	155/200
Earwig	7/.149	0.447	0.122	155.4	0.075	0.72	0.62/0.43	180/260
Wasp**	7/.173	0.519	0.164	209.5	0.100	0.53	0.59/0.42	230/315
Hornet	19/.128	0.640	0.245	311.3	0.150	0.36	0.58/0.39	310/410
Chafer	19/.149	0.745	0.331	421.8	0.200	0.27	0.57/0.39	390/500
ACSR Conductor								
Squirrel	6/1.083	0.249	0.032	40.8	0.020	2.60	0.67/0.49	80/120
Gopher*	6/1.093	0.279	0.941	51.2	0.025	2.14	0.67/0.49	95/140
Weasel	6/1.102	0.306	0.048	61.6	0.030	1.77	0.66/0.48	110/150
Rabbit*	6/1.132	0.396	0.082	103.2	0.050	1.06	0.65/0.47	145/205
Raccoon	6/1.161	0.471	0.121	153.5	0.075	0.71	0.64/0.45	185/255
Dog*	6/7.186 .062	0.558	0.163	204.9	0.100	0.54	0.61/0.42	250/300
Tiger	30/7.093	0.651	0.199	253.2	0.125	0.43	0.54/0.35	290/380
Lynx	30/7.110	0.770	0.239	354.3	0.150	0.31	0.53/0.34	340/470
Panther	30/7.118	0.826	0.320	407.7	0.200	0.27	0.52/0.34	430/510

EXHIBIT 8
Sht. 1 of 2

USAID FROM THE AMERICAN PEOPLE	USAID POWER DISTRIBUTION PROGRAM	Drawing No. Data Charts

EXHIBIT 8
Sht: 2 of 2

CHARACTERISTICS OF CONDUCTOR IN USE BY WAPDA (1)

COPPER

CODE NAME	Conductor Diameter Inches	Copper Sq. Inch	Area Mcm	Resistance Per Mile Per Phase (2)	Resistance Per Mile Per Phase 54" GMD	Capacity (4) Amps
8 SWG	0.160	0.020	25.6	2.65	0.69	60
5 SWG	0.212	0.035	44.9	1.51	0.66	90
3 SWG	0.250	0.050	63.5	1.07	0.64	120
3/.104	0.224	0.025	32.5	2.12	0.67	75
3/.147	0.317	0.050	64.8	1.07	0.63	125
7/.116	0.348	0.075	94.2	0.74	0.62	160
7/.136	0.408	0.100	129.4	0.53	0.60	200
7/.166	0.498	0.150	192.9	0.36	0.58	270
7/.193	0.579	0.200	260.7	0.26	0.56	340

NOTES:-
(1) SINGLE ASTERISK (*) INDICATES WAPDA STANDARD SIZES FOR HT CONSTRUCTION.
DOUBLE ASTERISK (**) INDICATES WAPDA STANDARD SIZES FOR LT CONSTRACTION
(2) BASED ON CONDUCTOR TEMPERATURE OF 75 DEGREES CENTIGRADE.
(3) CAPACITY BASED ON 40 C AMBIENT, 35 C RISE IN STILL AIR /AIR AT 2' PER SECOND
(4) CAPACITY BASED 0N 30 C TEMPERATURE RISE, ON AIR MOVEMENT.

USAID FROM THE AMERICAN PEOPLE

USAID POWER DISTRIBUTION PROGRAM

Drawing No.

Data Charts

S.W.G. SIZE	DIA IN	AREA SQ.IN	AREA MCM	WEIGHT - LBS	WEIGHT - LBS MILE	ULT-STR Lbs	RES Ohms/MI 20˚c	CURRENT AMPS 20˚c	AWG: EQUIV: SIZE
12	0.104	0.0084	10.805	32.8	173	528	5.23	75	10+
10	0.128	0.0129	16.180	40.6	262	816	3.45	110	8-
8	0.160	0.020	25.600	77.5	409	1.270	2.20	160	6-
6	0.192	0.028	36.369	111.6	588	1.550	1.53	180	5+
5	0.212	0.035	44.09	136.9	718	2.080	1.25	200	4+
4	0.232	0.0422	59.27	162.9	360	2.420	1.05	220	3+
3	0.250	0.0499	63.500	132.0	1.015	2.875	0.89	250	2-
2	0.276	0.0598	71.180	230.0	1.220	3.350	0.73	280	1+
1	0.300	0.0706	99.000	272.0	1.430	3.880	0.63	320	1-
STRAND NO/DIA									
7/.064	0.192	0.0220	28.673	37.3	161	1.370	1.97	140	5+
7/.069	0.205	0.0260	33.338	102.0	550	4.542	1.70	155	5
3/.104	0.224	0.025	32.5	100.0	540	1.518	1.74	155	5-
3/.114	0.246	0.030	35.00	119.0	628	1.810	1.45	175	4-
3/131	0.282	0.040	50.48	157.0	829	2.350	1.10	205	3-
3/147	0.317	0.050	64.8	198.9	1.046	2.920	0.87	240	2-
7/.104	0.362	0.0595	76.71	220.0	1.220	3.540	0.74	260	1-
7/.116	0.348	0.075	94.2	290.0	531	4.353	0.60	295	1/0-
7/.136	0.408	0.100	129.4	400.0	2.105	5.872	0.44	360	2/0-
7/.140	0.470	0.1080	137.200	410.0	2.370	5.550	0.41	375	2/0+
7/.152	0.456	0.1270	361.700	500.1	2.640	7.222	0.35	420	3/0-
7/.166	0.498	0.150	192.9	590.0	3.116	8.576	0.29	480	4/0+
7/.186	0.558	0.1900	242.200	700.0	3.636	10.500	0.23	530	4/0+
7/.193	0.591	0.200	260.7	800.0	4.239	11.270	0.22	550	250 MCM

4/0+ INDICATES S.W.G. WIRE IS LARGER THAN 4/0 A.W.G. ENGLISH STANDARD.

USAID FROM THE AMERICAN PEOPLE	USAID POWER DISTRIBUTION PROGRAM	Drawing No. Data Charts

INITIAL SAG TABLES

(FOR STRINGING OF NEW CONDUCTORS)

Prepared on basis of 200' Ruling Span with final
maximum tension not to exceed 50% of breaking strength

I. ALL ALUMINUM WITH DIAMETER OF 325" OR LESS (7/.087 AI. GANT)
MAXIMUM TENSION NOT TO EXCEED 550 POUNDS

SPAN-FEET	75'	100'	125'	150'	175'	200'	225'	250'
TEMPERATURE	**SAG IN FEET AND INCHES**							
..	0'-1"	0'-2"	0'-4"	0'-5"	0'-7"	0'-10"	1'-0"	1'-3"
45˚	0'-2"	0'-3"	0'-5"	0'-7"	0'-9"	1'-0"	1'-3"	1'-6"
60˚	0'-2"	0'-4"	0'-6"	0'-8"	0'-11"	1'-2"	1'-6"	1'-10"
75˚	0'-2"	0'-4"	0'-7"	0'-10"	1'-1"	1'-5"	1'-10"	2'-3"
90˚	0'-3"	0'-5"	0'-8"	1'-0"	1'-5"	1'-10"	2'-3"	2'-10"
105˚	0'-4"	0'-7"	0'-10"	1'-3"	1'-8"	2'-2"	2'-9"	3'-5"
120˚	0'-4"	0'-8"	1'-0"	1'-6"	2'-0"	2'-7"	3'-4"	4'-1"

II. ALL ALUMINUM WITH DIAMETER OF 325" (7/.122 AI. ANT)
MAXIMUM TENSION NOT TO EXCEED 1.850 POUNDS (7/.175 AL WASP)

SPAN-FEET	75'	100'	125'	150'	175'	200'	225'	250'
TEMPERATURE	**SAG IN FEET AND INCHES**							
30˚F	0'-2"	0'-3"	0'-5"	0'-7"	0'-10"	1'-1"	1'-5"	1'-9"
45˚	0'-2"	0'-4"	0'-6"	0'-8"	0'-11"	1'-2"	1'-6"	1'-10"
60˚	0'-3"	0'-4"	0'-7"	0'-10"	4'-1"	1'-6"	1'-1"	2'-4"
75˚	0'-3"	0'-6"	0'-10"	1'-1"	1'-5"	1'-11"	2'-5"	2'-11"
90˚	0'-4"	0'-7"	0'-11"	1'-3"	1'-9"	2'-4"	2'-11"	3'-7"
105˚	0'-5"	0'-8"	1'-1"	1'-7"	2'-2"	2'-10"	3'-7"	4'-4"
120˚	0'-5"	0'-10"	1'-3"	1'-10"	2'-5"	3'-2"	4'-1"	5'-0"

USAID FROM THE AMERICAN PEOPLE	USAID POWER DISTRIBUTION PROGRAM	Drawing No. Data Charts

INITIAL SAG TABLES

(FOR STRINGING OF NEW CONDUCTORS)

Prepared on basis of 200' Ruling Span with final maximum tension not to exceed 50% of breaking strength

III. ACSR CONDUCTORS - ALL SIZES

SPAN-FEET	75'	100'	125'	150'	175'	200'	225'	250'
TEMPERATURE	**SAG IN FEET AND INCHES**							
..	0'-1"	0'-2"	0'-3"	0'-5"	0'-6"	0'-8"	0'-11"	1'-1"
45˚	0'-1"	0'-2"	0'-4"	0'-5"	0'-7"	0'-10"	1'-0"	1'-3"
60˚	0'-2"	0'-3"	0'-4"	0'-7"	0'-8"	8'-11"	1'-2"	1'-5"
75˚	0'-2"	0'-3"	0'-5"	0'-7"	0'-9"	0'-0"	1'-3"	1'-7"
90˚	0'-2"	0'-4"	0'-5"	0'-9"	1'-0"	1'-4"	1'-8"	2'-0"
105˚	0'-3"	0'-5"	0'-7"	0'-10"	1'-2"	1'-7"	2'-0"	2'-5"
120˚	0'-3"	0'-5"	0'-8"	1'-0"	1'-5"	1'-10"	2'-3"	2'-10"

IV. COPPER CONDUCTOR - ALL SIZES

SPAN-FEET	75'	100'	125'	150'	175'	200'	225'	250'
TEMPERATURE	**SAG IN FEET AND INCHES**							
30˚F	0'-2"	0'-3"	0'-3"	0'-5"	0'-9"	1'-0"	1'-3"	1'-5"
45˚	0'-2"	0'-4"	0'-5"	0'-8"	0'-11"	1'-2"	1'-6"	1'-10"
60˚	0'-2"	0'-4"	0'-6"	0'-9"	1'-0"	1'-4"	1'-8"	2'-0"
75˚	0'-2"	0'-4"	0'-7"	0'-10"	1'-1"	1'-5"	1'-10"	2'-3"
90˚	0'-3"	0'-5"	0'-8"	0'-11"	1'-3"	1'-7"	2'-0"	2'-6"
105˚	0'-3"	0'-6"	0'-9"	1'-0"	1'-5"	1'-10"	2'-4"	2'-11"
120˚	0'-4"	0'-6"	0'-10"	1'-2"	1'-7"	2'-7"	2'-7"	3'-2"

USAID FROM THE AMERICAN PEOPLE	USAID POWER DISTRIBUTION PROGRAM	Drawing No. Data Charts

FINAL SAG TABLES

(FOR STARINGING OF OLD OR PRESTRERCHED CONDUCTORS)

Prepared on basis of 200' Ruling Span with final maximum tension not to exceed 50% of breaking strength

I. ALL ALUMINIUM WITH DIAMETER OF .325" OR LESS (7/.087 AL. GNAT)

SPAN-FEET	75'	100'	125'	150'	175'	200'	225'	250'
TEMPERATURE	**SAG IN FEET AND INCHES**							
..	0'-2"	0'-3"	0'-5"	0'-7"	0'-9"	1'-00"	1'-3"	1'-7"
45˚	0'-2"	0'-4"	0'-6"	0'-8"	0'-11"	1'-3"	1'-7"	1'-7"
60˚	0'-3"	0'-5"	0'-7"	0'-11"	1'-3"	1'-7"	2'-0"	2'-6"
75˚	0'-3"	0'-6"	0'-9"	1'-1"	1'-6"	2'-0"	2'-6"	3'-1"
90˚	0'-4"	0'-7"	1'-0"	1'-4"	1'-11"	2'-6"	3'-2"	3'-11"
105˚	0'-5"	0'-9"	1'-2"	1'-8"	2'-3"	2'-8"	3'-9"	4'-7"
120˚	0'-6"	0'-10"	1'-3"	1'-10"	2'-6"	3'-4"	4'-2"	5'-2"

II. ALL ALUMINUM WITH DIAMETER OF OVER .325" (7/.122 AL. ANT) (7/.175 AL. WASP)

SPAN-FEET	75'	100'	125'	150'	175'	200'	225'	250'
TEMPERATURE	**SAG IN FEET AND INCHES**							
30˚F	0'-2"	0'-4"	0'-6"	0'-8"	0'-11"	1'-2"	1'-8"	1'-10"
45˚	0'-2"	0'-4"	0'-7"	0'-10"	1'-1"	1'-5"	1'-10"	2'-3"
60˚	0'-3"	0'-5"	0'-7"	1'-0"	1'-5"	1'-10"	2'-3"	2'-10"
75˚	0'-4"	0'-7"	0'-10"	1'-3"	1'-8"	2'-2"	2'-10"	3'-6"
90˚	0'-5"	0'-8"	1'-1"	1'-6"	2'-1"	2'-8"	3'-5"	4'-3"
105˚	0'-5"	0'-8"	1'-3"	1'-9"	2'-6"	3'-2"	4'-0"	4'-11"
120˚	0'-6"	0'-10"	1'-4"	1'-11"	2'-8"	3'-6"	4'-5"	5'-5"

USAID FROM THE AMERICAN PEOPLE	USAID POWER DISTRIBUTION PROGRAM	Drawing No. Data Charts

FINAL SAG TABLES

(FOR STARINGING OF OLD OR PRESTRERCHED CONDUCTORS)
Prepared on basis of 200' Ruling Span with final
maximum tension not to exceed 50% of breaking strength

III. ACSR CONDUCTOR ALL SIZES

SPAN-FEET	75'	100'	125'	150'	175'	200'	225'	250'
TEMPERATURE	**SAG IN FEET AND INCHES**							
_	0'-1"	0'-2"	0'-3"	0'-5"	0'-6"	0'-8"	0'-11"	1'-1"
45˚	0'-2"	0'-3"	0'-4"	0'-6"	0'-8"	0'-10"	1'-1"	1'-4"
60˚	0'-2"	0'-3"	0'-5"	0'-7"	0'-9"	1'-0"	1'-3"	1'-7"
75˚	0'-2"	0'-3"	0'-5"	0'-8"	0'-11"	1'-2"	1'-6"	1'-10"
90˚	0'-2"	0'-4"	1'-7"	0'-9"	1'-1"	1'-5"	1'-9"	2'-2"
105˚	0'-3"	0'-5"	1'-8"	1'-0"	1'-4"	1'-9"	2'-3"	2'-9"
120˚	0'-4"	0'-7"	0'-10"	1'-3"	1'-8"	2'-2"	2'-0"	3'-5"

IV. COPPER CONDUCTORS - ALL SIZES

SPAN-FEET	75'	100'	125'	150'	175'	200'	225'	250'
TEMPERATURE	**SAG IN FEET AND INCHES**							
30˚F	0'-2"	0'-3"	0'-5"	0'-7"	0'-10"	1'-1"	1'-5"	1'-9"
45˚	0'-2"	0'-4"	0'-5"	0'-8"	0'-11"	1'-3"	1'-6"	1'-11"
60˚	0'-2"	0'-4"	0'-7"	0'-9"	1'-1"	1'-5"	1'-9"	2'-2"
75˚	0'-3"	0'-5"	0'-8"	0'-11"	1'-3"	1'-8"	2'-1"	2'-6"
90˚	0'-3"	0'-6"	0'-9"	1'-1"	1'-5"	1'-11"	2'-5"	2'-11"
105˚	0'-4"	0'-6"	0'-10"	1'-2"	1'-8"	2'-2"	2'-9"	3'-4"
120˚	0'-4"	0'-7"	0'-11"	1'-4"	1'-10"	2'-5"	3'-0"	3'-9"

USAID FROM THE AMERICAN PEOPLE	USAID POWER DISTRIBUTION PROGRAM	Drawing No. Data Charts

TABLE - 1
SELECTION OF BOLTED CONNECTORS

	Dog	Rabbit	Gopher	Wasp	Ant	Gnat	7/.052	19/.052	19/.083	37/.083
Dog	T150	T155	S157 T155	T150	T155	S157 T155	S157	S157 T155	T155 T150	T150
Rabbit	T155	T110	S117 S157 T110	T155	T110	S117 S157 T110	S117 S157	S117 S157 T110	T110 T155	T155
Gopher	S157 T155	S117 T110 S157	S117 T110	S157 T155	S117 T110	S117 T110	S117	S117 T110	T155 S117 T110	T157 T155
Wasp	T150	T155	S157 T155	T150	T155	S157 T155	S157	S157 T155	T155 T150	T150
Ant	T155	T110	S117 T110	T155	T110	S117 T110	S117	S117 T110	T110 T155	T155
Gnat	S157 T155	S117 S157 T110	S117 T110	S157 T155	S117 T110	S117 T110	S117	S117 T110	T155 S117 T110	S157 T155
7/.052	S157	S117 S157	S117	S157	S117	S157	-	S117	S117	S157
19/.052	S157 T155	S117 S157 T110	S117 T110	S157 T155	S117 T110	S117 T110	S117	S117 T110	T110 S117 T155	S157 T155 T150
19/.083	T155 T150	T110 T155	S117 T110 T155	T155 T150	T110 T155	S117 T155 T110	S117	S117 T155 T110	T150 T155 T110	T155
37/.083	T150	T155	S157 T155	T150	T155	S157 T155	S157	S157 T155 T150	T155	T150

USAID FROM THE AMERICAN PEOPLE

USAID POWER DISTRIBUTION PROGRAM

Drawing No.

Data Charts

LINE AND SERVICE TAP (TEE OFF) COMPRESSION CONNECTOR

	DOG	RABBIT	GOPHER	WASP	ANT	GNAT	7/.052	19/.052	19/.083	37/.083
DOG	YPC28U28	YPC28U26	-	YPC28U26	YP28U26	YP028U4	YPC28U4	YPC28U4	YPC28U26 YPC28U28	-
RABBIT	YPC28U26	YP25U25	YP26AU2	YPC28U26	YP25U25	YP26AU2	YP26AU2*	YP26AU2	YP25U25	-
GOPHER	-	YP26AU2	YP26AU2	-	YP26AU2	YP26AU2	YP26AU2*	YP26AU2	YP26AU2	-
WASP	YPC28U28	YPC28U28	-	YPC28U28	YPC28U28	YP028U4	YPC28U4*	YPC28U4	YPC28U28	-
ANT	YP28U26	YP25U25	YP26AU2	YPC28U26	YP25U25	YP26AU2	YP26AU2*	YP26AU2	YP25U25	-
GNAT	YPC28U4	YP26AU2	YP26AU2	YPC28U4	YP26AU2	YP2U3	YP2U3*	YP2U3	YP26AU2	-
7/.052	YPC28U4	YP26AU2*	YP26AU2*	YPC28U4*	YP26AU2*	-	YP2U3*	YP2U3*	-	-
19/.052	YPC28U4	YP026AU2	YPC26AU2	YPC28U4	YP26AU2	YP2U3	YP2U3*	YP2U3	YP26AU2	YPC28U4*
19/.083	YPC28U26 YPC28U28	YP25U25	YP26AU2	YPC28U28	YP25U25	YP26AU2	-	YP26AU2	YP25U25	YPC28U28*
37/.083	-	-	-	-	-	-	-	YPC28U4*	YPC28U28	-

*TO BE CONFIRMED EXPERIMENTALLY .

TABLE - III

TYPE OF SLEEVES AND DIES FOR SLEEVE JOINTS

CONDUCTOR	WAPDA SLEEVE DESIGNATION		BURNDY CO-SLEEVE		BURNDY CO-DIE NUMBER	
	INNER	OUTER	INNER	OUTER	INNER	OUTER
ACSR						
DOG	PS-DOG	MS2A-DOG	YDs-28 RP 2	YDs-28 RP 1	W-248	W-249
GOPHER	-	MSIA-GOPHER	-	YDs-3 RL	-	W-243
RABBIT	-	MSIA-RABBIT	-	YDs-25 RL	-	W-247
A.A.C						
GNAT	-	MSIA-GNAT	-	YDs-2 WA	-	W-163
ANT	-	MSIA-ANT	-	YDs-25 AT	-	W-243
WASP	-	MSIA-WASP	-	YDs-28 AT	-	W-249

TYPE OF REPAIR SLEEVE AND DIES

CONDUCTOR	WAPDA SLEEVE DESIGNATION	BURNDY CO - REPAIR SLEEVE	BURNDY CO-DIE NUMBER
ACSR			
GOPHER	RIA-GOPHER	YCU2R	W-239
RABBIT	RIA-RABBIT	YCU25R	W-243
DOG	RIA-DOG	YCU28R	W-249
A.A.C			
GNAT	RIA-GNAT	YCU2CA	W-163
ANT	RIA-ANT	YCU25A	W-243
WASP	RIA-WASP	YCU28R	W-249

USAID FROM THE AMERICAN PEOPLE	USAID POWER DISTRIBUTION PROGRAM	Drawing No. Data Charts

DIMENSION AND CHARACTERISTICS OF STANDARD LT PVC INSULATED ALUMINIUM CABLES

NO.	SIZE			Nominal Conductor Weight Lbs: / 1000 Yds: Per Conductor	Resistance in ohms at 20 deg: c. ohms/ 1000 yds.	Over all Conductor die of each core		Approx. Current rating (Amps)	Voltage drop at cables rated current per 100 ft (Volts)
	Nominal	Area	Stranding						
	Sq: In	Sq: mm	No/Inst:			Inch	mm		
I.	**SINGLE CORE L.T CABLE NON ARMOURED**								
1.	0.10	64.52	19/.083	368.2	0.397	0.415	10.50	115	4.5
2.	0.20	129.03	37/.83	717.4	0.204	0.581	14.80	170	3.5
II.	**SINGLE CORE UNDER GROUND LT. CABLE.**								
1.	0.04	25.0	19/.052	144.5	1.031	0.260	6.60	65	5.3
2.	0.10	64.52	19/.083	368.2	0.397	0.415	10.5	165	4.5
3.	0.20	129.03	37/.083	717.4	0.204	0.581	14.8	250	3.5
4.	0.50	322.58	61/.103	1821.0	0.08	0.927	25.5	435	3.8
III.	**TWO CORE LT. CABLE NON ARMOURED**								
1.	0.0145	9.36	7/.052	53.15	2.795	0.156	3.96	32	7.1
	0.04	25. 0	19/.052	144.5	1.031	0.26	6.60	77	6.5
IV.	**FOUR CORE LT. CABLE NON ARMOURED**								
1.	0.0145	9.36	7/.052 Inch. or 7/1.32 mm	53.15	3.118	0.156	3.96	32	5.2
2.	0.10	64.52	19/.083 In or 19/2.11 mm	368.2	0.452	0.415	10.50	115	3.4
3.	0.20	129.03	37/.083 In or 37/2.11 mm	217.4	0.232	0.498	12.60	175	2.7
4.	0.50	322.58	61/.103 In or 61/2.62 mm	1821.0	0.091	0.927	23.5	320	2.3

USAID FROM THE AMERICAN PEOPLE	USAID POWER DISTRIBUTION PROGRAM	Drawing No. Data Charts

LOAD CARRYING CAPABILITY OF STANDARD CONDUCTORS IN KVA KILOMETERS FOR 11KV, AND KVA - METERS FOR L.T. AT DIFFERENT POWER FACTORS AND PERCENT VOLTAGE DROPS.

CONDUCTOR CODE NAME	CAPACITY IN KVA KILLOMETERS FOR 11KV, AND KVA METERS FOR LT. CONDUCTORS																			
	AT.0.7 P.F. AND AT VOLTAGE DROP				AT 0.8 P.F AND AT VOLTAGE DROP				AT 0.9 P.F AND AT VOLTAGE DROP				AT 1 P.F AND AT VOLTAGE DROP				AT .95 P.F LOADING AND AT V.D			
	3%	4%	5%	6%	3%	4%	5%	6%	3%	4%	5%	6%	3%	4%	5%	6%	3%	4%	5%	6%
L.T																				
1. GNAT.	_	5681	7102	8522	3909	5212	6515	7818	3664	4886	6106	7328	3661	4882	6102	7323	4165	5553	6942	8330
2. ANT.	7260	9681	12100	14521	6861	9148	11435	13721	6664	8885	11107	13328	7219	9626	12032	14438	8818	11756	14696	17635
3. WASP.	11617	15489	19361	23233	11427	15237	19045	22855	11702	15603	19504	23405	14576	19414	24293	29151	20740	27654	34567	41481
11KV																				
4. GOPHER	2962	3951	4980	5926	2760	3679	4600	5519	2639	3518	4397	5278	2729	3639	4548	5458	3199	4265	5332	398
5. RABBIT	4830	6440	8050	9660	4735	6313	7892	9470	4735	6313	7892	9470	5490	7321	9150	10980	7317	9757	12196	14635
6. DOG.	7210	9612	12015	14418	7317	9757	12196	14365	7791	10388	12985	15582	10734	14111	17889	21486	17887	23849	29812	35774

NOTE:-

THE KVA KILOMETERS CAPACITIES OF 11KV CONDUCTORS AND KVA METER CAPACITIES OF L.T CONDUCTOR FOR ANY PERMISSIBLE VOLTAGE DROP WILL BE SUBJECT TO THEIR RESPECTIVE THERMAL RATINGS IN AMPERES. THE LOAD TO BE SUPPLIED AT A KNOWN DISTANCE AND A GIVEN VOLTAGE DROP MUST NOT EXCEED THE CURRANT CARRYING CAPACITY OF THE CONDUCTOR.

USAID FROM THE AMERICAN PEOPLE	USAID POWER DISTRIBUTION PROGRAM	Drawing No. Data Charts

LOAD CARRYING CAPABILITY OF STANDARD CONDUCTORS IN KVA MILES FOR 11KV, AND KVA - YARDS FOR L.T. AT DIFFERENT POWER FACTORS AND PERCENT VOLTAGE DROPS.

CONDUCTOR CODE NAME	CAPACITY IN KVA MILES FOR 11KV, AND KVA YARDS FOR LT. CONDUCTORS																			
	AT.0.7 P.F. AND AT VOLTAGE DROP				AT 0.8 P.F AND AT VOLTAGE DROP				AT 0.9 P.F AND AT VOLTAGE DROP				AT 1 P.F AND AT VOLTAGE DROP				AT .95 P.F LOADING & AT V.D			
	3%	4%	5%	6%	3%	4%	5%	6%	3%	4%	5%	6%	3%	4%	5%	6%	3%	4%	5%	6%
11KV																				
1. GOPHER	-	2454	3067	3681	1714	2285	2857	3428	1639	2185	2731	3278	1693	2260	2825	3390	1973	2649	3312	3974
2. RABBIT.	3000	4000	5000	6000	2941	3921	4902	5882	2941	3921	4902	5882	3410	4547	5683	6829	4545	6060	7575	9090
3. DOG.	4470	5970	7463	8955	4145	6060	7575	9090	4839	6452	8065	9678	6667	8889	11111	13334	11110	14813	18517	22220
L.T. 4. GNAT.	4660	6211	7767	9320	4275	5700	7125	8550	4007	5343	6678	8014	4004	5339	8673	8008	4555	6073	7592	9110
5. ANT.	7940	10587	13233	15880	7503	10004	12505	15006	7288	9717	12147	14576	7895	10527	13159	15790	9643	12857	16072	19286
6. WASP.	12704	16939	21173	2540	12497	16663	20829	24994	12798	17064	21330	25596	15940	21253	26567	31830	22652	30243	3780	45364

USAID FROM THE AMERICAN PEOPLE	USAID POWER DISTRIBUTION PROGRAM	Drawing No. Data Charts

MINIMUM CLEARANCES FOR OVERHEAD LINES

SR	DESCRIPTION			LINE VOLTAGE					
				400 V	11 KV	33 KV	66 KV	132 KV	220 KV
1	2			3	4	5	6	7	8
1	MINIMUM CLEARANCE FROM GROUND IN FEET / MM	ACROSS A STREET OR INTARSECTION OR ROAD		19/ 5791	20/ 6096	20/ 6096	26/ 7925	26/ 7925	26/ 7925
		ALONG A STREET		17/ 5182	20/ 6096	20/ 6069	-	-	-
		ACROSS PRIVATE PROPERTY AND CROSS COUNTRY		15/ 4572	15/ 4572	15/ 4572	20/ 6096	22/ 6706	23/ 7010
		OVER RIVERS & MAJOR CANALS		-	-	-	30/ 9144	30/ 9144	30/ 9144
2	MINIMUM CLEARANCE FROM BUILDING FEET/MM	VERTICAL CLEARANCE OVER ROOFS ETC.		8/ 2438	12/ 3658	12/ 3658	15/ 4572	17/ 5182	20/ 6069
		HORIZANTAL CLEARANCE FROM WALLS END PARTS OF A BUILDING		4/ 1219	6/ 1829	6/ 1829	15/ 4572	20/ 6096	25/ 7620
3	MINIMUM CLEARANCE FROM RAIWAY INSTALLATI ONS FT/MM	FROM RAILWAY	INSIDE STATION LIMITS	31.5/ 9601	33/ 10058	34/ 10363	35/ 10668	36/ 10973	37/ 11278
			OUTSIDE STATION LIMITS	23.5/ 7163	25/ 7620	26/ 7925	27/ 8230	28/ 5434	29/ 8839
		FROM RAILWAY TRACK 2' – 6'' GUAGE	INSIDE STATION LIMITS	28.5/ 8687	30/ 9144	31/ 9449	32/ 9754	33/ 10058	34/ 10363
			OUTSIDE STATION LIMITS	20.5/ 6243	22/ 6706	23/ 7010	24/ 7315	25/ 7620	26/ 7925
		FROM RAILWAY POWER LINE OR OTHER RAILWAY STRUCTURES.		10.5/ 3200	10.5/ 3200	10.5/ 3200	10.5/ 3200	12.5/ 3810	13.5/ 4115

USAID FROM THE AMERICAN PEOPLE	USAID POWER DISTRIBUTION PROGRAM	Drawing No. Data Charts

SR	DESCRIPTION			LINE VOLTAGE					
				400 V	11 KV	33 KV	66 KV	132 KV	220 KV
1	2			3	4	5	6	7	8
4	MINIMUM CLEARANCE BETWEEN TWO LINES AT CROSSING	INSULATED SERVICES GUYS EARTHWIRE etc		2/ 610	6/ 1829	6/ 1829	9/ 2743	11/ 3353	13/ 3962
		TELEGRAPH LINE		4/ 1219	6/ 1829	6/ 1829	9/ 2743	11/ 3353	13/ 3962
		400 V LINES		2/ 610	6/ 1829	6/ 1829	7/ 2134	9/ 2743	11/ 3353
		11 KV LINES		-	4/ 1219	6/ 1829	7/ 2134	9/ 2743	11/ 3353
5	MINIMUM CLEARANCE BETWEEN DIFFERENT CIRCUITS MOUNTED ON THE SAME POLE	HORIZANTAL CLEARANCE	BETWEEN CIRCUITS OF SAME VOLTAGE	0.75/ 229	4/ 1219	4/ 1219	14/ 4267	19/ 5791	29/ 8839
		VERTICAL CLEARANCE	400 V LINE	4/ 1219	4/ 1219	4/ 1219	-	-	-
			11 KV LINE	4/ 119	4/ 1219	4/ 1219	-	-	-
6	MINIMUM CLEARANCE BETWEEN CONDUCTO-RS OF THE SAME CIRCUITS	HORIZANTAL CLEARANCE	Between phases of same circuit	1.33/ 405	3.67/ 813	3.17/ 966	11/ 335	16/ 487	16/ 4977
		VERTICAL CLEARANCE	Between phases of same circuit	1/ 305	2.5/ 762	3.2/ 975	8/ 2438	12/ 3658	16/ 4877
			Between 11 Kv line & T-off conductor below.		2.75/ 838	-	-	-	-

USAID FROM THE AMERICAN PEOPLE	USAID POWER DISTRIBUTION PROGRAM	Drawing No. Data Charts

MINIMUM CLEARANCE FOR OVERHEAD LINES-2

Sr.	DESCRIPTION:		LINE VOLTAGE					
			400 V	11 KV	33 KV	66 KV	132 KV	220 KV
1	2		3	4	5	6	7	8
7	MISCELLANEOUS CLEARANCE BETWEEN CIRCUITS, CONDUCTORE OR OBJECTS NOT COVERD ABOVE	a. Clearance between insulated service and open telegraph line. = 2'/ 610 mm b. Clearance between 11 KV Line and open telegraph line. = 1'/305 mm c. Clearance between Open telegraph line & cable communication. = 2'/610 mm d. Clearance between street light brackets & 400V Line or telegraph lines. = 1'/305 mm e. Clearance between guy wire at pole attachment & open telegraph line = 2'/610 mm f. Clearance between guy wire at pole attachment & 400V Line or Cable. = 0.25'/76 mm g. Clearance between guy wire at pole attachment & 11KV Line or cable. = 0.75'/229 mm						
	For Line of 66 KV and above, generally two circuits will be mounted on the same pole and will be in vertical formation. At these circuits of different voltages are not to be installed on the same pole. The horizontal clearances for circuit of the same volt age are given at Sr. No.5. These are preferred design values for the conductors now used and spans of 900 ft. and 1200 ft. for 66 KV, 132KV Lines respectively. For other spans or heavy conductors the clearances may have to be changed.							

USAID FROM THE AMERICAN PEOPLE	USAID POWER DISTRIBUTION PROGRAM	Drawing No. Data Charts

USEFUL INFORMATION (GENERAL)

The unit of current is the Ampere (C)

The unit of pressure is the Volt (E) $C = \frac{E}{R}$

The unit of resistance is the Ohm (R)

The unit of Power is the Wait. = C X E = Amperes X Volts
746 Watts = 1 Horse Power = 33.000 foot / pounds per unit
1 Horse Power English = 1.01385 Horse Power French (Force de cheval)
1 Horse Power French = 4,500 kilograms per minute = .9863 Horse Power English
The large unit of power is the kilowatt = 1,000 Watts
The Board of Trade unit (B.T.U.) = 1 Kilowatt hour = 1,000 watt hours = 1.34 Horse Power hours
1 watt 00134 Hours Power. Kilowatt = 1.34 Horse Power
1 Gallon of Water = 10 pounds = 0.1605 cubic foot
The pressure of the Atmosphere = 14.7 pounds per square inch
Circumference of Circle = diameter X 3.1416
Diameter of Circle = Circumference X .31831
Area of Circle = diameter squared X .7854
Diameter of Circle = square foot of area X 1.12837
Area of Ellipse long axis X short axis X .7854
Area of Triangle = base X 1/2 perpendicular height.
Diameter of circle X .8862 = side of an equal square (equal area)
Side of square X 1.283 = diameter of an equal circle (equal area)
Surface of a cylinder = area of both ends + (length X circumference)
Surface of a Cone = area of base X 1/2 (slant height X circumference)
Surface of Sphere = diameter squared X 3.1416
Contents of a Cylinder = area of one end X length
Contents of a Cone = area of base X 1/3 perpendicular height
Contents of Sphere = diameter cubed X .5236

Drum Capacity in feet = (A+B) A X W X $\frac{n}{\ }$

where
A = depth of flange in inches.
B = diameter of barrel in inches.
W = width of reel between flanges in inches
D = diameter of material in inches.

USAID FROM THE AMERICAN PEOPLE	USAID POWER DISTRIBUTION PROGRAM	Drawing No. Data Charts

CONVERSION TABLE (British System to Metric System)

TO CONVERT	MULTIPLY BY		TO CONVERT	MULTIPLY BY
mm TO in	0.03937		in TO mm	25.4
[illegible]	0.00155		in^2 TO mm^2	645.16
cm^3 TO in^3	0.6102		in^3 TO cm^3	16.3871
[illegible]	0.2403		in^4 TO mm^4	41.6231
m. TO ft.	3.2808		ft TO m	0.3048
m^2 TO ft^2	10.7639		ft^2 To m^2	0.09290
m^3 TO ft^3	35.3147		ft^3 TO m^3	0.02832
m TO yd	1.0936		Yd TO m	0.9144
m^2 TO yd^2	1.1960		Yd^2 TO m^2	0.8361
m^3 TO yd^3	1.3080		Yd^3 TO m^3	0.7646
kg. TO lb	2.2046		lb TO kg	0.4536
kg TO cwt	0.01968		cwt to kg	50.8023
kg TO tons	0.0009842		tons TO kg	1016.0461
lb TO tons	0.0004464		tons TO lb	2240
Shor tons to tons	0.8929		tons to short tons	1.12
Tons (metric) to tons	0.9852		tons to tons (metric)	1.0160
kg/mm^2 TO lb/in^2	1422.33		lb/in^2 TO kg/mm^2	0.0007031
$tons/in^2$ TO lb/in^2	2240		lb/in^2 TO $tons/in^2$	0.0004464
gr/cm TO lb/in	0.03613		lb/ft TO gr/cm	27.6799
kg/m TO ib/ft	0.6720		lb/ft TO kg/m	1.4882
kg/m^2 TO lb/ft^2	0.2048		lb/ft^2 TO kg/m^2	4.8824
kg/mm^2 TO $tons/in^2$	0.6350		$tons/in^2$ TO mm^2	1.5749

USAID FROM THE AMERICAN PEOPLE	USAID POWER DISTRIBUTION PROGRAM	Drawing No. Data Charts

CONVERSION TABLE

(British System to Metric System)

2

No.	S.W.G		B.W.G.		A.W.G or B&S		No.	S.W.G		B.W.G		A.W.G or B&S	
	Inch	mm	Inch	mm	inch	mm		Inch	mm	Inch	mm	Inch	mm
40	0.400	10.16	0.454	11.532	0.4500	11.684	24	0.0220	0.559	0.022	0.559	0.0201	0.511
30	0.372	9.499	0.425	10.795	0.4096	10.404	25	0.0200	0.508	0.020	0.508	0.0179	0.455
20	0.348	8.839	0.380	9.652	0.3848	9.266	26	0.0180	0.457	0.018	0.457	0.0159	0.404
0	0.324	8.230	0.340	8.636	0.3249	8.252	27	0.0164	0.417	0.016	0.406	0.0142	0.361
1	0.300	7.620	0.300	7.620	0.2893	7.348	28	0.0148	0.376	0.014	0.356	0.0126	0.32
2	0.276	7.010	0.284	7.214	0.2576	6.543	29	0.0136	0.345	0.013	0.33	0.0113	0.287
3	0.252	6.401	0.259	6.579	0.2294	5.827	30	0.0124	0.315	0.012	0.305	0.0100	0.254
4	0.232	5.893	0.238	6.045	0.2043	5.189	31	0.0116	0.295	0.010	0.254	0.0089	0.226
5	0.212	5.385	0.220	5.588	0.1819	4.620	32	0.0108	0.274	0.009	0.229	0.0080	0.203
6	0.192	4.877	0.203	5.156	0.1620	4.115	33	0.0100	0.254	0.008	0.203	0.0071	0.180
7	0.176	4.47	0.18	4.572	0.1443	3.665	34	0.0092	0.234	0.007	0.178	0.0063	0.160
8	0.160	4.064	0.165	4.191	0.1285	3.264	35	0.0094	0.213	0.005	0.127	0.0056	0.142
9	144	3.658	0.148	3.759	0.1144	2.906	36	0.0076	0.193	0.004	0.102	0.0050	0.127
10	0.128	3.251	0.134	3.404	0.1019	2.588	37	0.0068	0.173			0.0045	0.114
11	0.116	2.946	0.120	3.048	0.0907	2.304	38	0.0060	0.152			0.0040	0.102
12	0.104	2.642	0.109	2.769	0.0808	2.052	39	0.0052	0.132			0.0035	0.09
13	0.092	2.337	0.095	2.413	0.0720	1.829	40	0.0048	0.122			0.0031	0.079
14	0.080	2.032	0.083	2.108	0.0641	1.628	41	0.0044	0.112			0.0028	0.071
15	0.072	1.829	0.072	1.829	0.0571	1.450	42	0.0040	0.102			0.0025	0.063
16	0.064	1.626	0.065	1.651	0.0508	1.290	43	0.0036	0.091			0.0025	0.056
17	0.056	1.422	0.058	1.473	0.0453	1.151	44	0.0032	0.081			0.0020	0.051
18	0.048	1.219	0.049	1.245	0.0403	1.024	45	0.0028	0.071			0.00176	0.045
19	0.040	1.016	0.042	1.067	0.0359	0.912	46	0.0024	0.061			0.00157	0.04
	0.036	0.914	0.035	0.889	0.0320	0.813	47	0.0020	0.051			0.00140	0.036
20	0.032	0.813	0.032	0.813	0.0285	0.724	48	0.0016	0.041			0.00124	0.031
21	0.028	0.711	0.028	0.711	0.0253	0.643	49	0.0012	0.030			0.00111	0.028
22	0.024	0.610	0.025	0.635	0.0226	0.574	50	0.0010	0.025			0.00099	0.025

USAID FROM THE AMERICAN PEOPLE	USAID POWER DISTRIBUTION PROGRAM	Drawing No. Data Charts

Conversion Factors (General)

To Convert	Multiply by
Miles to millimeters (mm) 1000 (mils = inch)	0.0254
Inches to centimeters (cm)	2.54
Centimeters to inches	0.3937
Feet to meters (m)	0.3048
Meters to feet (ft)	3.2808
Yards to meters (m)	0.9144
Meters to yard (yd)	1.0936
Miles to kilometers (km)	1.6093
Kilometers to miles	0.6214
Square inches to circular mills (circ miles)	1273.240
Square inches to square millimeters (mm^2)	645.16
Square millimeters to square inches ($inch^2$)	0.000155
Square yards to square meters (m^2)	0.8361
Square meters to square yards (yds^2)	1.196
Hectares to acres	2.471
Acres to hectares	0.4047
cubic inches to cubic centimeters (cm^3)	16.387
Cubic centimeters to cubic inches ($inch^3$)	0.061
Cubic yards to cubic meters (m^3)	0.7646
Cubic meters to cubic yards (yds^3)	1.308
Pounds to kilograms (kg)	0.4536
Kilograms to pounds (lb)	2.205
Tons (2240 lb) to kilograms (kg)	1016
Kilograms to tons (2240)	0.00098
Ounces avoirdupois to grams	28.35
Grams to ounces (avoirdupois)	0.0353
Grains (troy) to grams	0.0648
Grammies to grains (troy)	15.432
gallons to liters	4.546
Liters to gallons	0.220
Horsepower to foot-pounds per minute (ft lb/min)	33.000
Watts to foot-pounds per minute (ft lb/min)	44.24
Horsepower to kilowatts (kw)	0.746
Kilowatts to horsepower (hp)	1.34
Atmospheres lb per square inch ($lb/inch^2$)	14.68
Miles per hour to feet per minute (ft/min)	88.0
Land miles to nautical miles	0.868
Nautical miles to land miles	1.152
Temperature	
F to C subtract 32 and multiply by 5/9	
C to F multiply by 9/5 and add 32	

USAID FROM THE AMERICAN PEOPLE	USAID POWER DISTRIBUTION PROGRAM	Drawing No. Data Charts

Size of fuse elements composed of plain or tinned copper wire for use in semi-enclosed fuses

Current rating of fuse	Nominal diameter of wire
amp	mm
3	0.15
5	0.20
10	0.35
15	0.50
20	0.60
25	0.75
30	0.85
45	1.25
60	1.53
80	1.80
100	2.00

Note:-

The use of cartridge fuses to the appropriate British Standard is normally recommended, but where a rewritable fuse is used the figures given in the above table will, in absence of recommendations made by the maker of the fuse provide an approximate guide to the size of wire required. These figures represent the current which the fuse will carry continuously, the value at which the fuse will blow is approximately twice depending on the type and construction of the fuse.

This table is taken from Table A IM of the IEE Regulations. 14th Edition.

USAID FROM THE AMERICAN PEOPLE	USAID POWER DISTRIBUTION PROGRAM	Drawing No. Data Charts

Calculation of capacitor size (For Line)

The following table has been prepared to simplify KVAR calculations for power factor improvement. The size of capacitor in KVAR load KW multiplied by factor given in table to improve from existing power factor to proposed power factor.

Existing	Proposed power factor					Existing	Proposed power factor				
	1.00	0.95	0.90	0.85	0.80		1.00	0.95	0.90	0.85	0.80
0.20	4.899	4.570	4.415	4.279	4.149	0.61	1.299	0.970	0.815	0.679	0.549
0.21	4.656	4.327	4.171	4.036	3.906	0.62	1.266	0.937	0.781	0.646	0.515
0.22	4.433	4.104	3.949	3.813	3.683	0.63	1.233	0.904	0.748	0.613	0.482
0.23	4.231	4.902	3.747	3.611	3.483	0.64	1.201	0.872	0.716	0.581	0.45
0.24	4.045	3.716	3.561	3.423	3.295	0.65	1.169	0.840	0.685	0.549	0.419
0.25	3.873	3.544	3.389	3.253	3.123	0.66	1.138	0.810	0.654	0.518	0.388
0.26	3.714	3.385	3.229	3.094	2.264	0.67	1.108	0.779	0.624	0.488	0.338
0.27	3.566	3.238	3.082	2.946	2.816	0.68	1.078	0.750	0.594	0.458	0.328
0.28	3.429	3.100	2.944	2.809	2.679	0.69	1.049	0.720	0.565	0.429	0.298
0.29	3.300	2.971	2.816	2.680	2.550	0.70	1.020	0.691	0.536	0.400	0.270
0.30	3.180	2.851	2.696	2.560	2.430	0.71	0.992	0.663	0.507	0.372	0.241
0.31	3.067	2.738	2.583	2.447	2.317	0.72	0.964	0.635	0.480	0.344	0.214
0.32	2.961	2.632	2.476	2.341	2.211	0.73	0.936	0.608	0.452	0.316	0.186
0.33	2.861	2.532	2.376	2.241	2.111	0.74	0.909	0.580	0.425	0.289	0.158
0.34	2.766	2.437	2.282	2.146	2.016	0.75	0.882	0.555	0.398	0.262	0.132
0.35	2.676	2.347	2.192	2.056	1.926	0.76	0.855	0.527	0.371	0.235	0.105
0.36	2.592	2.263	2.107	1.972	1.842	0.77	0.829	0.500	0.344	0.209	0.078
0.37	2.511	2.182	2.027	1.891	1.761	0.78	0.802	0.474	0.318	0.182	0.052
0.38	2.434	2.105	1.950	1.814	1.684	0.79	0.776	0.447	0.292	0.157	0.026
0.39	2.361	2.032	1.877	1.741	1.611	0.80	0.750	0.421	0.266	0.130	-
0.40	2.291	1.963	1.807	1.671	1.541	0.81	0.724	0.395	0.240	0.104	-
0.41	2.225	1.896	1.740	1.603	1.475	0.82	0.698	0.369	0.214	0.074	-
0.42	2.161	1.832	1.676	1.541	1.410	0.83	0.672	0.343	0.188	0.058	-
0.43	2.100	1.771	1.615	1.480	1.349	0.84	0.646	0.317	0.162	0.026	-
0.44	2.041	1.712	1.557	1.421	1.291	0.85	0.620	0.291	0.136	-	-
0.45	1.985	1.656	1.501	1.363	1.235	0.86	0.593	0.265	0.109	-	-
0.46	1.930	1.602	1.446	1.310	1.180	0.87	0.567	0.238	0.082	-	-
0.47	1.877	1.548	1.392	1.257	1.128	0.88	0.540	0.211	0.056	-	-
0.48	1.828	1.499	1.343	1.208	1.077	0.89	0.512	0.183	0.028	-	-
0.49	1.779	1.450	1.295	1.159	1.029	0.90	0.484	0.155	-	-	-
0.50	1.732	1.403	1.248	1.112	0.982	0.91	0.456	0.127	-	-	-
0.51	1.687	1.358	1.202	1.067	0.936	0.92	0.426	0.097	-	-	-
0.52	1.643	1.314	1.158	1.023	0.892	0.93	0.395	0.066	-	-	-
0.53	1.600	1.271	1.116	0.980	0.850	0.94	0.363	0.034	-	-	-
0.54	1.559	1.230	1.074	0.939	0.801	0.95	0.326	-	-	-	-
0.55	1.518	1.189	1.034	0.898	0.768	0.96	0.292	-	-	-	-
0.56	1.479	1.150	0.995	0.859	0.729	0.97	0.257	-	-	-	-
0.57	1.441	1.113	0.957	0.822	0.691	0.98	0.203	-	-	-	-
0.58	1.425	1.079	0.920	0.785	0.654	0.99	0.142	-	-	-	-
0.59	1.365	1.040	0.882	0.748	0.628	1.00	-	-	-	-	-
0.60	1.333	0.843	0.713	0.582	-	-	-	-	-	-	-

USAID FROM THE AMERICAN PEOPLE	USAID POWER DISTRIBUTION PROGRAM	Drawing No. Data Charts

Inch Fractions

Decimals and millimeters

Inch		Millimeters	Inch		Millimeters
Fraction	Decimal		Fraction	Decimal	
1/44	0.015629	0.3969	33/64	0.313623	13.0696
1/32	0.03129	0.7938	17/32	0.53125	13.4938
3/64	0.046875	1.1906	35/64	0.546875	13.8906
1/16	0.0623	1.5875	9/16	0.5625	14.2875
3/64	0.078125	1.9844	37/64	0.578125	14.6844
3/32	0.09375	2.3812	19/32	0.59375	15.0812
7/64	0.109375	2.7781	39/64	0.609375	15.4781
1/8	0.125	3.175	5/8	0.625	15.875
9/64	0.140624	3.5719	41/64	0.640623	16.2719
3/32	0.15625	3.9688	21/32	0.63623	16.6688
11/64	0.171875	4.3656	43/64	0.671875	17.0636
3/16	0.1875	4.7625	11/16	0.6875	17.4625
13/64	0.203125	5.1594	45/64	0.703125	17.8594
7/32	0.21875	5.5562	23/32	0.71875	18.2562
15/64	0.234375	5.9531	47/64	0.734375	18.6531
1/4	0.25	6.35	3/4	0.75	19.05
17/64	0.263625	6.7469	49/64	0.765625	19.4469
9/32	0.28125	7.1438	25/32	0.78125	19.8438
19/64	0.296875	7.5406	51/64	0.796875	20.2406
5/16	0.3125	7.9375	13/16	0.8125	20.6375
21/64	0.328125	8.3344	53/64	0.888125	21.0344
11/32	0.34375	8.7312	27/32	0.84375	21.4312
23/64	0.359375	9.1281	55/64	0.859375	21.8281
3/8	0.375	9.525	7/8	0.875	22.223
25/64	0.390629	9.9219	37/64	0.890625	22.6219
13/32	0.40623	10.3188	29/32	0.90625	23.0188
27/64	0.421875	10.7136	59/64	0.921875	23.4156
7/16	0.4375	11.1123	13/16	0.9375	23.8125
29/64	0.453125	11.5094	61/64	0.953125	24.2094
15/32	0.46875	11.9062	31/32	0.96875	24.6062
31/64	0.484375	12.3031	63/64	0.98437	25.0031
1/2	0.5	12.7	1	1	25.4

USAID FROM THE AMERICAN PEOPLE	USAID POWER DISTRIBUTION PROGRAM	Drawing No. Data Charts

LOADING OF DISTRIBUTION TRANSFORMERS

Recurrent daily loading for operating conditions of transformers - Expressed as percentage of rated K.V.A.

Cooling air Temperature. °C	°F	24 Hrs. loading all day.	Long Periods 16. Hrs H. Loads	Recovery Hrs Low Load	Medium Periods 6. Hrs H. Load	Recovery 16. Hrs L. Load	Short Periods 3 Hrs L. Load	Recovery 21 Hrs L. Load
5	41	115%	120%	100%	125%	100%	145%	100%
10	50	110%	115%	94%	120%	94%	140%	94%
20	68	100%	105%	82%	110%	82%	130%	82%
25	72	94%	100%	76%	105%	76%	125%	76%
30	86	88%	94%	70%	100%	70%	120%	70%
35	95	82%	88%	64%	94%	64%	115%	64%
40	104	76%	82%	57%	88%	57%	110%	57%
45	113	70%	76%	49%	82%	49%	105%	49%
50	122	64%	70%	40%	76%	40%	100%	40%

Note :- Light load means a loading which keeps the windings temperature not exceeding 70 °C. The table clarifies that loadings in % of K.V.A should be controlled as per above table or a higher capacity transformer installed accordingly.