Let 493

BACKGROUND REPORT (Part A)

Best Practices for Domestic Water Conservation in Israel

By: **Dr. Shlomo Kimchie**

Consultant for Ecological subjects. Haifa, Israel.

Report submitted to the:

AED - Academy of Educational Development, and

GreenCOM - Environmental Education Communication Project

In the framework of:

A delivery order from the USAID - United States Agency for International Development

Remark: The instruments and equipment of specific manufacturers mentioned or described in this report are given as examples of existing products on the market. Their inclusion in the report does not mean any recommendation of the author to prefer their use over similar equipment of other manufacturers which were not mentioned in the report. The author will not be held responsible for damages which might be caused to anybody by using any of the instruments mentioned in this report.

Background Report (part A)

Best Practices for Domestic Water Conservation in Israel

Table of Contents Page

1. Domestic water conservation (DWC) in Israel - present situation
2. The major best practices/programs in the field of DWC in Israel
2.1 Legislative means
2.2 The water pricing policy
2.3 Education/public awareness programs
2.3.1 Water commission public awareness programs
2.3.2 Educational programs and the "Sakhnin Center" educational model
2.4 Devices for water saving at the household level
2.5 Water conservation in the home gardening
2.6 Treatment and recycling of wastewater and gray water for home gardens
2.7 leakage prevention
3. Reference

1. Domestic water conservation (DWC) in Israel - present situation

Israel is facing the problem of water shortage since the establishment of the state in 1948. The total water resources of Israel as projected for the year 2010 is of about 2,150 MCMY (current water use is about 2,000 MCMY, million cubic meters a year). As seen from Figure 1 the annual water use is similar in amount to the annual resource renovation potential.. Of the total water resources some 52% is groundwater and fresh water springs, 31% is surface water deriving mainly from the Jordan watershed, and 12% is marginal water. The remaining 5% comprises economically utilizable flash flood waters. The two largest use sections in the water balance are agriculture (1,200 MCMY, about 56%) and domestic use (640 MCMY, about 30%). Fig. 2 (After Shelef, 1990) depicts the trends in water use in Israel during the last 30 years. It can be seen from this figure that while the fresh water demand for agriculture

NATIONAL WATER BALANCE SOURCES AND USE (PROJECTION - 2000) (MCM)

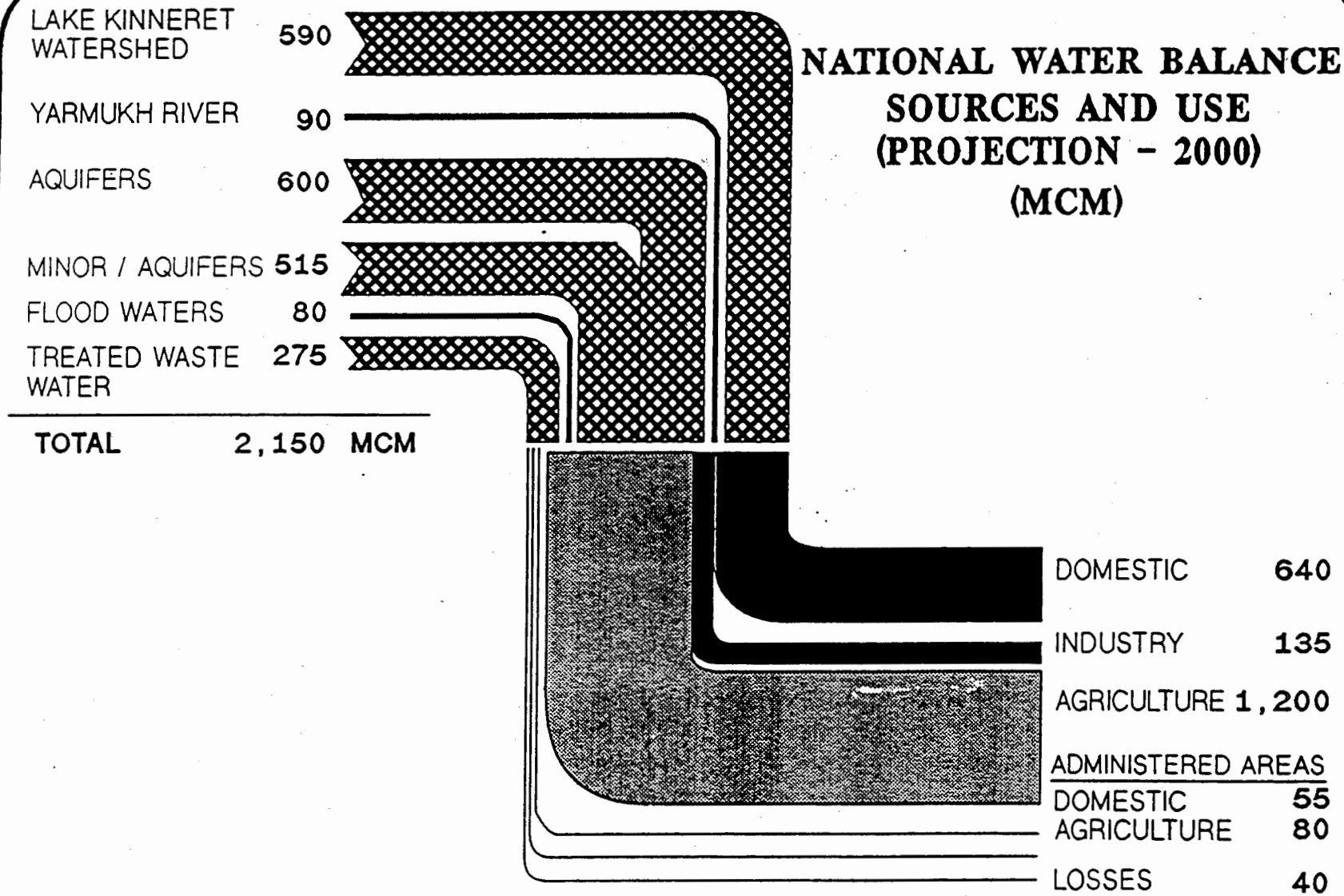

FIG. A-1

ICWE

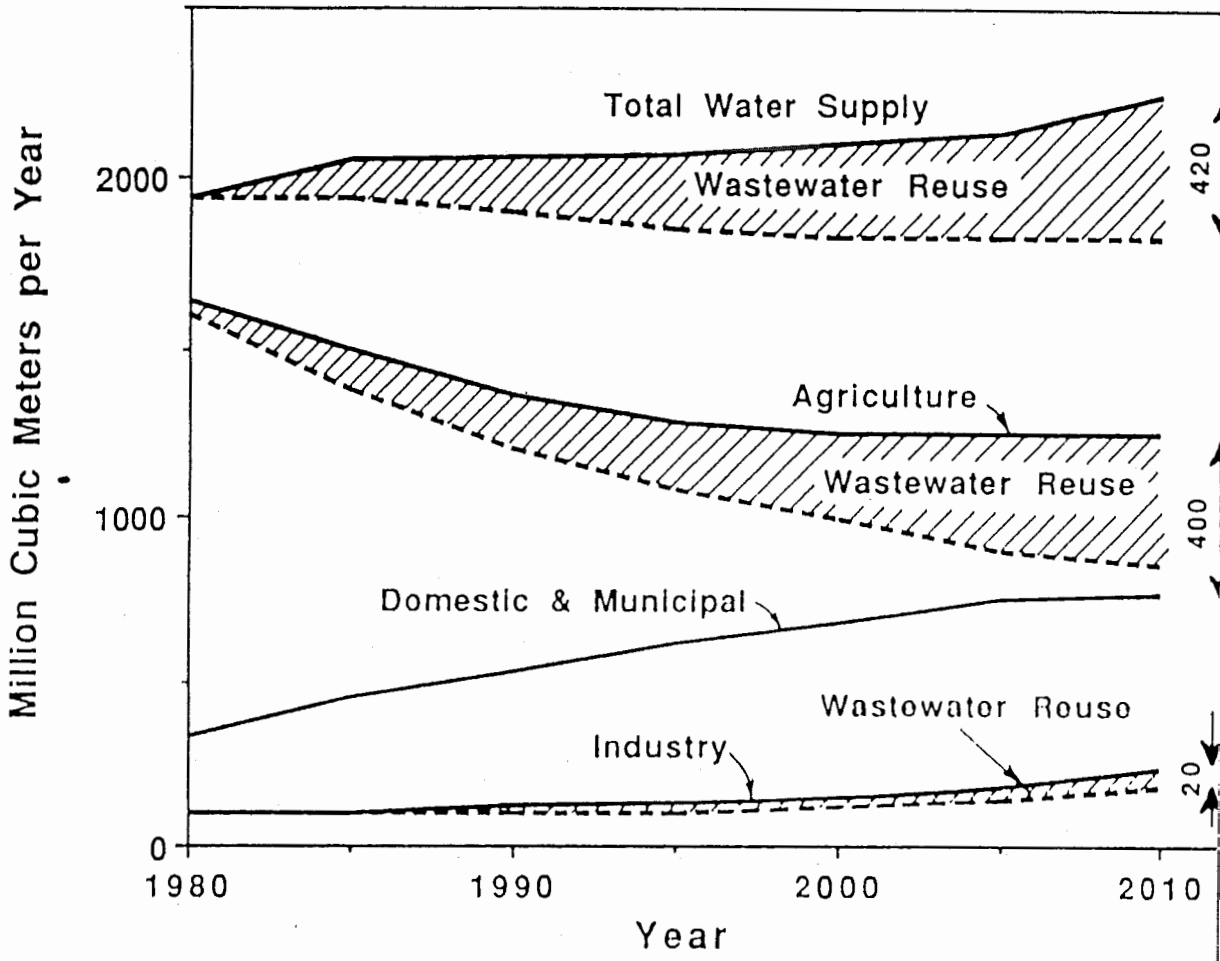

Fig.1. Wastewater reuse as part of the overall water ba

is drastically decreasing, there is a constant trend of increase in domestic and municipal water demands. The increase in domestic water use stems from the population increase and also from the increasing per capita water use due to the rising living standards. The decrease in water demand for agriculture stems from the enhancement of treated wastewater reuse for irrigation and from water saving due to improved irrigation technologies and changes in the types of irrigated crops.

Current domestic water use in Israel is about 500 MCMY. Of this quantity about 65% (range of 47-73%) is purely residential ("in-house" use) while the remainder is for public and commercial use including irrigation of public parks and landscaped areas. The average pre-capita domestic water consumption (total) is about 85 m^3 a year. This value has large variations (between 30-120 m^3/yr.) according to living standards, availability of facilities and extent of gardens. In order to supply the growing water demands for future population growth and economic development, the major options available for the additional water resources are as follows:

- Desalination
- Water import
- Recycling of treated wastewater
- Increase rain by cloud seeding
- Increase catchment of flash flood water

In light of the high investment needed and of the quantity limitations of the above mentioned optional water resources, it is obvious that **water conservation** is becoming a very important issue in saving the national water resources.

The present report (parts "A" and "B") reviews the major programs and best practices executed in Israel concerning domestic water conservation (DWC).

The governmental body in charge of all water affairs is the Water Commission which controls the legal and technical aspects related to efficient use of water in all three use sectors: domestic, industrial and agricultural.

The professional aspects of domestic water conservation (DWC) are executed by several departments of the Water Commission together with other governmental offices and with local, municipal and regional authorities.

The major departments responsible for the execution of specific subjects of DWC are as follows:

* The Israel Center for Waterworks Equipment (ICWE)
* The Irrigation and Soil Field Service, Ministry of Agriculture.
* The Garden Irrigation Efficiency Dept.
* The National Gardening and Landscape Association.
* The Israel Municipal Water Works Administration (IMWWA).

The IMWWA is the coordinating body in the level of municipalities and regional authorities. It's main activities are:

- Situation reviews
- Preparation of beads, including definition of detailed technical demands
- Project follow-up.

Success in water conservation can be achieved by a combination of means. Most important to the subject is public awareness. Public awareness is a pre-requisite for willing of the public to cooperate in efforts directed at two main directions:

- Waste prevention and rational use of water.
- Using of water saving devices.

Public awareness to DWC is developed by educational programs aimed for school children and also by public campaigns aimed for the adult population.

Living on the edge of the desert, Israel had significant achievements in the struggle against water scarcity. With careful water resource management programs Israel had succeeded to achieve efficient water utilization and reduce "per capita" and "per product unit" water consumption below the standards of other industrialized countries. This experience is available for other countries in the region.

2. The major best practices/programs in the field of DWC in Israel

Of all categories of water use in Israel, the domestic sector is the most complex and difficult to control and manage.

The water use in this sector involves every citizen directly, his home and business, each water faucet, bath, toilet and garden sprinkler. Consequently, conserving water in this sector is more complex, legally and administratively than in all other sectors. The following programs are implemented by The Israel Water Commission in order to conduct an efficient DWC policy:

a/ Conduct educating and informing campaign for the public (in mass media, school programs) on why and how to conserve water.

b/ Establish the basic per household water allocation and impose a progressive water rate schedule,

c/ Initiate and support the development of installations for efficient (and conserving) domestic water use.

Details of the various activities are given in the next sections of this chapter.

2.1 Legislative means

As a result of the water scarcity and of the need for efficient management of the water resources in the country, the Israeli Government had implemented a comprehensive code of water laws.

Most basic is the declaration that the state owns all the water resources in the country. The Water Law, 1959, is the most basic and comprehensive of the water laws. Other important laws related to water management and conservation in Israel are:

* The water metering law, 1955.
* The Water Drilling Control Law, 1955, and
* The Drainage and Flood control Law, 1957.

Concomitant with each of the water laws is an extensive system of regulations and orders designed for implementing the provisions of the various laws.

Most important in the connection of water conservation are the parts of the Water Law which are regulating the water allocations for each use sector. The allocation system had promoted a long series of technological development designed to reduce water use as far as possible.

According to the law water metering is obligatory for all users and uses, without exception, including water metering for all residential housing units.

The Administrative Framework

Parliamentary responsibility in all matters pertaining to water is entrusted to the **Minister of Agriculture**, who, under the provisions of the Water Laws, is in charge of their enforcement. The executor of the provisions of the water laws is the Water Commissioner, appointed by the Minister of Agriculture to manage the water affairs of the state. The Water Commissioner is armed with an extensive array of legal powers. The Water commissioner is responsible for the work of the **Water Commission** which comprises several departments, some of them deal with subjects relevant to the direct subject of the present report, e.g. water use efficiency, water allocations and legal and economic affairs. The commission also operates through the Israel Municipal Water Works Administration and through the Israel Center for Waterworks Equipment.

The local authorities execute the policies of the Water Commission, in accordance with the Water Laws, through a system of by-laws. The Water Commission acts has a supervisory role regarding the activities of the local authorities.

Although the actual installation of many devices aimed at DWC is voluntary, there is a system of regulations (or the regulations are in preparation) compelling the installation of specific devices either in new buildings or in existing houses and gardens.

An example is the law forbidding tap flushing of toilets in housing. The law demands cistern flushing. A significant and immediate saving in water consumption of about 50% is achieved by replacing the tap type by the cistern type of flushing. Another 40% saving is expected due to another law (yet in preparation) demanding the installation of dual volume flushing cistern (4.5 or 9 liter per flushing) in the toilets of every new building. The expected water saving due to this law is 15% of the total residential water use.

There are also sustained regulations about leak detection and repair in the household area, about hours of irrigation and about other topics related to DWC.
Regulations regarding **quality of equipment** are of high importance too. By cooperation among several professional bodies (ICWE and the Israeli Institution of Standards) Quality Standards were formulated for the various water saving devices. An example is the Israeli Quality Standard (IQS) no. 1482 and IQS no. 1483 defining the qualifications required from pressure regulators in the shower and tap heads. The demands of IQS 1483 deal with:

- Degree of flow-rate accuracy.
- Range of operation pressures.
- Consistency of flow -rate.
- Building materials and screw threads strength.
- Pressure resistibility.
- Thermal hammer resistibility.
- Quality of metal coating. and:
- Limitation of handle heating rate.

2.2 The water pricing policy

Water prices in Israel differ, according to water use by the various sectors. They are divided mainly into three categories:

- potable water used for production (agriculture and/or industry).
- potable water for urban and household use.
- reclaimed water.

Potable water prices for urban and household use are much higher than for production purposes. The prices are progressive and the "Tariff policy" is encouraging conservation, or minimizing usage beyond the basic necessities, as defined by the law. Prices for urban water use are set by the Minister of Interior with the approval of the Parliament's Finance Committee and are not subsidized (as are the water for production purposes, either for industry or agriculture). The prices reflect the actual

cost of water production and supply, from water source to customer. The prices are based on the following principles:

a. **Definition of the norm:** Assuming the normative water consumption for a household of four persons living in a condo of 16 apartments, on a quarter acre land. This family's normative net use of water is set at 270 m^3/yr., of which 30 m^3/yr. is for gardening and 240 m^3/yr. for personal use (i.e. 60 m^3/yr. per capita for personal consumption plus 7.5 m^3/yr. per capita for gardening).

b. Price rates for household of 4 persons (remark: for families of more than 4 persons each additional person is allocated 36 m^3/yr. at a rate of 0.65 \$/m^3/yr.).

i. Rate A - 0.65 \$/m^3, for 96 m^3/yr.

ii. Rate A 1 (for private garden) - 0.65\$/m^3 for maximum of 30 m^3/yr.

iii. Rate B - 1.0\$/m^3 for 84 m^3/yr.

iv. Rate C - 1.4\$/m^3 for each excessive m^3

At these rates the average family in Israel (4 persons) pays 250\$ a year for normative use of 270 m^3. The average price for m^3 is 0.926 \$/m^3, while the cost of excessive 1m^3 beyond the norm is 1.4\$/m^3 (Kahana and Avnon, 1995).

The prices for reclaimed water are significantly lower (40-60%) than those of potable water. This gives an economical initiative to use reclaimed water for agricultural irrigation.

The initiative to replace potable water by treated wastewater or gray water in the case of **home gardening** irrigation is even higher since this water will cost only the price of treatment while saving potable water with prices of up to 1.5\$/m^3 !

2.3 Education/ public awareness programs

Public awareness is regarded as a prerequisite for the success of any DWC program. Projects aimed at increasing the public awareness may fall either in the regime of **education** or in that of **publicity** and **advertisement**. The age of the target population for a specific "public awareness project" will usually determine the type of program. The young population, in the age of school, can be exposed very effectively to

educational programs that will teach them the subject of water including DWC, while **advertisement** and **public campaigns** should be operated in order to enhance awareness to the subject of DWC in populations beyond school age.

2.3.1 Water commission public awareness programs

Public awareness is a prerequisite for any successful program leading to DWC. The water commission is involved and initiates public education campaigns both for the general public (through the media) and for school children.

Past experience in Israel indicate that massive publicity campaigns for water conservation is effective. For example following the drought years of 1986 and 1990 massive campaign were implemented and as a result about 10% saving in domestic water (as well as in irrigation water) have been achieved. It should be mentioned that these campaigns were initiated as a reaction to an emergency situation. Soon after the campaigns were over the water consumption returned to normal.

Feasibility calculations of publicity campaigns indicate that the investment in publicity campaigns is negligible compared to the true values of the conserved water and of the means which should otherwise been taken to supply the same amount of water as that conserved.

A public education campaign carried out in the city of Jerusalem in 1986-1989 showed that some 12 MCM were saved in 3 years (about 10% of the total use). The cost of water saved amounted to 5.7×10^6 \$ not counting for the costs of alternative investments which should have been done otherwise to bring that amount of water to Jerusalem.

Public information campaigns are designed to promote understanding and dialogue in the community on water conservation topics (e.g. avoid irrigation in windy weather, irrigate at nigh-time, repair water leakage, install water-saving devices etc.), as well as to motivate customers to conserve water.

Delivery mechanism: The media (printed media, radio, television) either via free public service announcement, paid advertisement or actual news stories, can be used

for dissemination. Use can also be made of leaflets, brochures and speakers, for the promotion of desired topics.

Public impact: Although it is believed that publicity campaigns are effective in motivating the customers to use water more wisely and to install water saving devices, it is impossible to quantify the impact. The publicity expenses are generally estimated to be negligible as compared to the direct and indirect benefits they cause.

Results: It is difficult (if not impossible) to quantify the results of educational programs in the field of water conservation. The expenses of educational programs are generally regarded negligible as compared to the direct and indirect benefits in water conservation.

2.3.2 Education programs and the Sakhnin Center educational model

Water education programs are mainly aimed at school children as to where water comes from, how it is used and ways to conserve water.

Two major education approaches are common:

1. In classrooms
2. In specific programs e.g. study tours, exhibitions, workshops etc.

   The Water Commission is providing the teachers with written material. They are also training workshops and conduct assemblies on water conservation.

The experience accumulated in the Sakhnin Center educational model is also of interest (details are given in Report "B" Appendix 6 a'). This Center started its operation at 1995 around the local wastewater treatment plant. The Center's activity is supported by cooperation of various local and governmental authorities (e.g. The Municipality of Sakhnin, the Local Environmental Quality Unit, The Ministries of : Environment, Agriculture, Education and Interior, The Water Commission and by international funds). The Center's activities are aimed at several goals:

1. Teach, train, demonstrate and instruct children as well as teachers and the professional community in subjects such as: wastewater treatment, use of

reclaimed water for safe irrigation, environmental protection, water conservation and energy conservation.

2. Become a center for the local community for dissemination of topics as in section (1) by tours, lectures and other cultural activities.
3. Become an experiments station for students and high school children that are executing their research projects (Biotop/Ecotop/Thesis).
4. Become a meeting point for professionals and for the open public from various nations (Israel, neighboring countries etc.) and from various sectors of the Israeli population (Arab sector, Jewish sector etc.)

In the last year over 1,000 school children visited the Center in the framework of educational "Ecology day". Also about 300 high-school children are already working in the Center on their individual projects.

Guided tours on water conservation and related topics for individuals and groups from all over the world were given to over 200 visiting professionals (engineers, technicians, agronomists, teachers and educational supervisors).

2.4 Devices for water saving at the household level

The estimated number of installed water saving instruments in Israel until now is over 150,000. These instruments were installed in thousands of houses, institutions, hotels, and other public or private sites.

About 1third of the average domestic water consumption is needed for the toilet flushing. It can be seen from Fig. 3 that toilet flushing is the biggest water consumption item (40%) hence reduction of this item has the largest potential for water saving. Based on this assumption it was decided to develop a dual volume flushing cistern (DVFC) device. The "history" of development have passed stages of trouble shooting which were caused by non-satisfying washing of the closet stool. As a result of this several changes were done in the design of the closet stool and an improved regulation for the minimal height of installation of the cistern above the lavatory seat (55 cm) was introduced.

גיליון1 תרשים 2

Distribution of the domestic water consumption in Israel

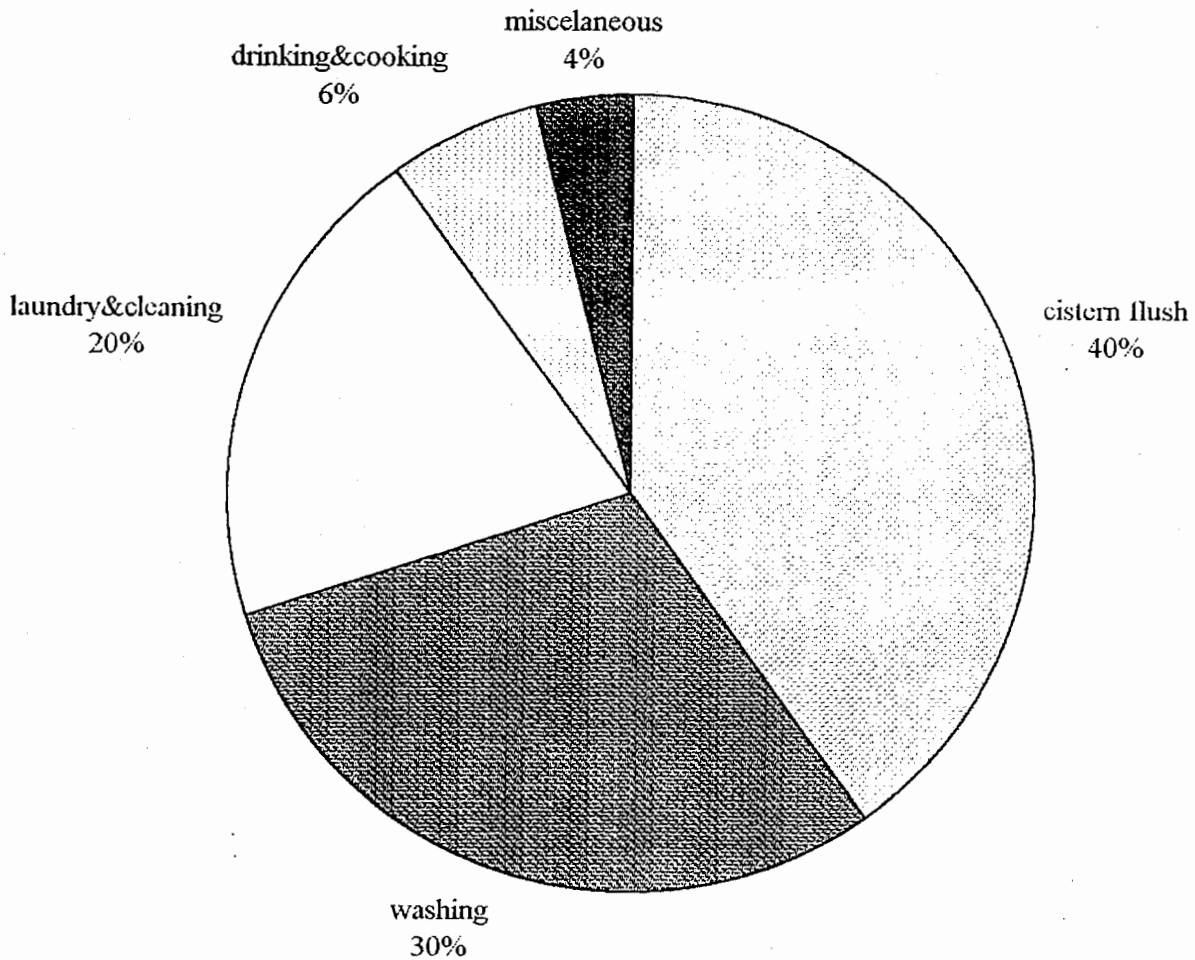

An Israeli Quality Standard Regulation for flushing cisterns (IQSR no. 851) had been revised updated and approved. It requires two water quantities, of 4.5 and 9.0 liter, that can be chosen according to the user's will. According to estimations of the Water Commission the water saving by the DVFC amounts to some 11% of the total domestic water consumption.

Other significant instruments developed for water saving in household use are:

a/ Flow-controlled shower heads (limiting shower head flow to 8-10 L/min. instead of 20-30 L/min.). The Water Commission estimates the potential saving of this device at some 8 - 10% of the domestic water use.

b/ Faucet flow regulators. This device is equipped with a pressure regulated orifice and delivers a limited water flow. It is estimated to save 5% of the total domestic water consumption.

c/ Improved desert cooler (acting as air conditioners) equipped with water recirculation pump (saves 80% of the water used: 40 l/h instead of 200 l/h).

d/ Apartment pressure regulators. This device keeps a constant line pressure of about 1.5 bar regardless of pressure fluctuations.

More technical details and examples of the above mentioned devices are given in report "B" and its Appendices.

Table 1 (from Kahana and Avnon, '95) is summarizing the saving results obtained in a survey, including several thousands of devices, conducted by the ICWE.

The equipment and installators chosen should be qualified in order to ensure reliable installations.

2.5 Water conservation in the home gardening

Several means are recommended for water conservation in home gardening. They can be divided into 4 categories:

1. Garden planning.
2. Education and professional instruction.
3. Irrigation systems and technologies.
4. Agrotechniques.

Table 1: Findings from a number of surveys on the savings obtained from installation of "in-house" water-saving devices

Location	Survey Period	Devices Installed	Saving Obtained %	Comments
Be'er Sheva	1977-88 12 years	Flow-controlled shower heads and faucets	11.4	Filters installed in network; no clogging or deflects
Mevasseret Zion	1987-88 1 year	Flow-controlled shower heads and faucets; dual-flushing cisterns	34.8	Leakages also repaired; no defects or complaints reported
Army Base	1989 - 6 months	Flow-controlled shower heads and faucets; dual flushing cisterns	47.9	Leakages also repaired; no defects or complaints reported
Police Stations	1989 - 4 months	Flow-controlled shower heads and faucets; dual flushing cisterns	50	Leakages also repaired; no defects or complaints reported
Mizra Boarding School	1988-89 1 year	Flow-controlled shower heads	30	No defects or complaints reported; hot water saving
Apartments in Bavli - area of Tel Aviv	1987 - 4 months	Dual-flushing cisterns	13.5	No defects or complaints reported

The degree of water conservation due to the implementation of any technique is difficult to quantify. It is different from one case to the other and depends on many variables. In cases that the installation is done in a garden with much water waste the degree of potential saving achievable by the new fittings is much higher than in cases where a saving water garden already exists.

1/ Garden planning: This category includes several activities:

* Changing the type of plants from water requiring species into Mediterranean-type plants. Nir Oz demonstration garden (10.5 ha.) had introduced more than 550 such plants.
* Changing the landscape planning of the garden so as to achieve its aesthetic demand and/or other demands with less irrigated areas, especially less lawns, which are big water consumers by increased use of decorative paved areas and by other garden ornaments.
* Operation of integrated design of the irrigation systems and the garden irrigation plans.

2/ Education and professional instruction:

The main activities in this category are:

* Determination and dissemination of irrigation norms, determined for specific conditions (climatic region, soil type, plant, etc.)
* Preparation of irrigation guides and circulating of guidelines to home owners and professional gardeners.
* Design and operation of demonstration water- saving gardens (displaying new equipment and water saving garden species) in different climatic zones of the country.
* Preparation of seasonal operational plans.
* Organizing courses and exhibitions.
* Providing field extension and professional assistance to the home owners and gardeners. This is done in the stages of planning the garden installation of equipment and operation.

3/ Irrigation Systems and Technologies: The main activities in this category are:

* Promoting the development and installation of water saving devices and

maintaining follow-up program aimed at improving their performance and efficiency.

The main water saving devices are: part-circle sprinklers, automatically operated systems, volumetric valves and others.

* Installation of automated systems and micro-irrigation systems.
* Introduce methods for large and small compact scale units for wastewater treatment and for reuse of the reclaimed water.
* Extension of the use of soil probes, tensiometers and others.

4/ Agrotechniques: The main activities in this category are:

* Determining optimum irrigation intervals for tensiometer controlled irrigation systems.
* Testing the use of organic and inorganic mulches.
* Developing methods for weed control.
* Extension of soil cultivation techniques to improve infiltration, reduce soil cracking and minimize water losses.
* Developing of agrotechniques to reduce evapotranspiration (pruning, reduction of foliage)

The tensiometer-operated automatic irrigation system is recommended as an intelligent/rational decision basis for control.

Most of the devices and techniques mentioned in this chapter are described in details in Report "B".

2.6 Treatment and recycling of wastewater and gray water for home gardens

The high cost of fresh water makes the reuse of treated wastewater economically feasible. Since the health demands and regulations for wastewater treatment already impose quite high quality standards, it becomes attractive to reuse the treated effluents for agricultural irrigation, rather than disposing off the effluents to rivers or to the sea.

Delivery systems of reclaimed wastewater exist only in agricultural areas. The use of reclaimed wastewater or gray water in home gardening require either installation of

separate delivery system for treated wastewater or installation of a compact wastewater treatment unit. In the second case the water of one or several households are treated in an "on-site" compact unit and than used for garden irrigation. The cost of water is only the cost of treatment while the financial saving is based upon the marginal price of potable water which would be otherwise purchased for the same garden. This marginal price is up to 1.4 $\$/m^3$!

Details about the technologies of wastewater treatment and reuse in compact - home scale units are given in Report "B".

2.7 Leakage prevention

Leakage detection and repair in public systems is a subject regulated under the Water Laws including responsibilities for every step starting with periodical audits, reporting and repair of any detected leakage.

In the household-level leak detection and repair is voluntary with the following institutional initiatives:

a. The high - un subsidized prices of potable water for domestic use.
b. Public campaigns in all kinds of publication media for water saving and leak prevention.
c. Developing and testing instruments and pipes with high resistance to corrosion
d. Developing and testing of remote leakage detection instruments.
e. Developing computerized remote operated water meter reading systems. Such systems give on-line comparative information between the water meters reading of the customers and the water metering information of the supply sources (big difference are indicating leakage in public systems).

A case of leak prevention by specific installation of water meters for private apartments in the city of Eilat is described in details in Report "B" Chapter 3, case study 3.

3. Reference

1. Eshet, M. "Water saving in toilet flushing facilities" (Hebrew). Report submitted to the ICWE.
2. Gynsburg, E. (1991) "The impact of water saving devices on water conservation in the Israeli Police Stations" Annual Report (Hebrew) Submitted to the ICWE.
3. Gynsburg, E. (1992) "Follow-up of water saving devices in Ma'ale Efraim" Interim report (Hebrew) submitted to the ICWE.
4. Gynsburg, E. (1989) "The impact of pressure regulators on water conservation" Final Report (Hebrew) submitted to the ICWE.
5. Gynsburg, E. (1989) "Follow-up of water saving equipment in Mevaseret Zion" Annual Report (Hebrew) submitted to the ICWE.
6. Kahana,Y. and Avnon, M. (1995) "Water Conservation Measures in Israel." Report submitted to the ICWE and the IMWWA.
7. Kahana, Y. (1991) "Water Conservation in Israel - General Background and means to Achieve Conservation" (Hebrew). Report submitted to the ICWRE.
8. Kahana, Y. (1990) "Conservation - The biggest resource left for fresh water" (Hebrew) Report submitted to the ICWE.
9. Keidar, S. (1988) "Testing water conservation after installing apartment pressure regulators" Periodical Report (Hebrew) submitted to the ICWE.
10. Lazarovitch, S. (1980) "review on erosion damage and water leakage in the City of Eilat". Progress report (Hebrew) submitted to the ICWE.
11. Levertov, Y.,(1995) Short communication on "the financing of the ICWE" (Hebrew) in: Water & Irrigation 348 p.2, Oct. 1995
12. Raz, Z. (1991) "Water conservation by the dual volume toilet flushing device" Plasson Publ. April, 1991.
13. Shelef, G.,(1990), "The role of wastewater reuse in water resources management in Israel". Water Sci. & Technol. 23 (10-12), pp. 2081-1089.
14. Shelef, G., Kimchie, S.& Tarabeah, H. (1997), The Sakhnin Research, Demonstration and Training Project on: Wastewater treatment and reuse in small communities, Final Report to the USDA-EPA, May 1997.
15. Zilberstein, Y.and Zimchony, E. "Regulation and standards as a lever for domestic water conservation" (Hebrew). Report submitted to the ICWE.

Let 493

FINAL SUMMARY REPORT (PART B)

on:

Best Domestic Water Conservation Practices in Israel

By:

Dr. Shlomo Kimchie

Consultant for Ecological subj ects. Haifa, Israel.

Report submitted to the:

AED - Academy of Educational Development, and

GreenCOM - Environmental Education Communication Project

In the framework of:

A delivery order from the USAID - United States Agency for International Development

Remark: The instruments and equipment of specific manufacturers mentioned or described in this report are given as examples of existing products on the market. Their inclusion in the report does not mean any recommendation to prefer their use over similar equipment of other manufacturers which were not mentioned in the report. Neither does the author takes any responsibility for damages which might be caused to anybody by using any of the instruments mentioned in this report.

Haifa, Israel **June, 1997**

Final Summary Report, Part B:

Best Practices for Domestic Water Conservation in Israel

TABLE OF CONTENTS Page

1. Background 1

1.1 Scope of the report 1

1.2 Relevance of the subject to the Israeli water balance 3

1.3 Water saving devices in home use 6

1.4 Water saving devices in home gardening 8

1.5 Home-scale wastewater treatment facilities 9

2. Methodology 10

3. Case studies of Best Practices/Programs 10

Case Study 1: Water conservation programs related to testing the impact of water saving instruments in domestic use: Dual Volume Toilet Flushing Cistern (DVFC), Pressure Regulated - Flow controller (PR-FC) and Apartment Pressure Regulator (APR) 10

Program 1.1: Testing the impact of domestic water saving instruments in several Israeli Police facilities 10

Program 1.2: Follow-up of the efficiency improvement in domestic water consumption resulting from the installation of domestic water saving equipment in the village of Ma'ale Efraim (located in a high mountains area) 13

Program 1.3: The influence of Pressure Regulated - Flow Controllers (PR- FC) installation on domestic water saving in Be'er Sheva 15

Program 1.4: Follow-up of the water saving extent caused by installing water saving devices in apartments of "Mevaseret Zion" 19

Program 1.5: Testing of the water saving impact of apartment pressure regulators (APR) - Tel Aviv 22

Program 1.6: Best Practice - Technological improvement: Use of Dual Volume Flushing Cisterns (DVFC) in Israel 24

Table of contents (cont.) page

Case study 2: Best practice - Technological Improvement: Use of Electronic Operated (ELOP) automatic taps 26

Case study 3: Best Practice: Using various means for water-leak prevention in the domestic water supply system - efficiency review in the City of Eilat 27

Case study 4: Water saving devices for the home gardening sector 30

Best Practice 4.1: Drip irrigation 30

Best Practice 4.2: Controlled irrigation 32

Case study 5: Best Practices: Home-scale compact wastewater treatment facilities (HS-CWWTF) for the recycling of domestic wastewater for home gardening 34

Best Practice 5.1: Compact sewage treatment plant without excess sludge, Bio-Robi 35

Best Practice 5.2: Educational Center for the subject of water conservation around a local wastewater treatment plant in a rural area - The Sakhnin model 36

4. Discussion 38

5. Conclusions and Recommendations 38

6. Reference 40

Appendices:

Appendix 1: Technical description of the Dual Volume Cistern Flushing (DVCF) 41

Appendix 2: Technical description of the Pressure regulated - Flow Controller (PR- FC) 44

Appendix 3: Technical description of the Pressure Regulators for apartments main water supply pipes 47

Appendix 4: Technical description of the Electronic Operated (ELOP) taps 49

Table of contents (cont.) page

Appendix 5: Technical description of irrigation control valves 52

Appendix 6: **Part A**: Technical description of the Home-Scale Compact Wastewater Treatment Facilities (HS-CWWTF) 57

Part B: The educational program in the Sakhnin Center 63

Appendix 7: Hydrometers/watermeters/metering valves 69

Appendix 8: Tensiometers and soil moisture sensors 77

Appendix 9: Irrigation controllers 81

Appendix 10: Peripheral devices for controlled irrigation systems for home gardening (irrigation control valves, pressure regulators, pressure indicators) 93

I. BACKGROUND

I. 1 Scope of the report

Due to water scarcity in Israel the subject of domestic water conservation (DWC) became an important issue since the early days of the state. In the past 50 years much efforts were devoted to the subject and much experience accumulated. In Report "A" much of the public relations and educational programs executed in this subject were reviewed. The present report ("B") describes in more details the most significant technical achievements and application programs. It describes various water saving instruments in the domestic sector and the major programs executed in order to evaluate their impact on water saving.

It is the objective of this report to review the most important practices, technologies and programs in the field of domestic water conservation (DWC) which were operated in Israel and were the most effective regarding their impact on actual DWC. Transferring the Israeli experience in the subject of DWC may be useful in helping others (individuals, regions and countries) to implement the most useful items for their needs of water conservation.

The subjects covered by this report ("B") may be divided into 3 major categories:

1. Domestic instruments for water conservation such as Dual Volume Flushing Cisterns for the toilet washing, Pressure Regulator Devices to control and limit the water flow of taps and shower heads and Electronic Operated Taps.
2. Water saving devices in home gardening.
3. Home-level wastewater treatment for the recycling of the domestic wastewater for home gardening.

The installations and equipment used in Israel for DWC, covered as Best Practices in the framework of the present report, are the following:

a. Dual volume toilet flushing cistern (DVFC).
b. Pressure regulated flow controller (PR-FC) for shower heads and/or sink taps.
c. Pressure Regulator - (PR) for the apartment's main line.
d. Electronic operated (ELOP) taps.
e. Home gardening irrigation equipment such as irrigation mini-computers and irrigation systems controlled by timers, water volume, soil humidity etc.
g. Home - scale compact wastewater treatment facilities (HS-CWWTF) for water reuse in home gardening.

Public awareness for the subject of DWC is an essential prerequisite for the success and broad acceptance of any specific instrument or technique offered to the public for water conservation. Projects aimed at increasing the public awareness may fall either in the regime of **education** or in that of **public relations** and **advertisement**. The age of the target population for a specific "public awareness project" will be most influential in determining the type of program. The young population, in the age of school, can be exposed very effectively to **educational programs** that will teach them the subject of DWC, while **advertisement** and **public relations** projects should be operated in order to enhance awareness to the subject of DWC in populations beyond school age. The subjects of education and of public awareness programs are covered in more details in Report "A".

I.2 Relevance of the subject to the Israeli water balance

The national water balance in Israel indicates an almost complete utilization of the existing water resources (Fig. 1). Under such circumstances water saving is equivalent, in effect, to an

additional water resource in the nation's water budget. The "added" water are of high quality and do not require any additional investment, for water pumping or transportation, to be brought to the customer. The conserved water have the following advantages over other resources of water, mainly from reclamation and/or desalination programs:

a/ Water gained by DWC is a "resource" of high quality water, without added minerals or other contaminants.

b/ Immediate availability.

c/ Can be used everywhere.

d/ Does not require any additional energy investment.

In some countries it is estimated that the rate of water loss through domestic wastage exceeds 20% of the gross national water consumption rate! Water wastage through domestic systems in Israel is estimated at about 100 MCMY (about 5% of the gross national water consumption rate and about 17% of the domestic water consumption rate. See Fig. 1, after Kally 1997).

In the case of Israel DWC is of special importance since in this country all the other water resources are already utilized almost to the maximal extent. In drought years the under ground water resources are over utilized and the water levels of the aquifers are lowered down to dangerous levels. Therefore the water balance situation in Israel requires **permanent** DWC awareness. This is of course true in dry or drought years but also in rainy years. Since the under ground water resources of the Israeli aquifers are in a big water deficit, the aquifers require permanent rehabilitation, which is possible mainly during the rainy years. Adding the additional amounts gained by DWC to the amounts of water recharged to the aquifers has therefore a very significant effect on the rate of aquifers rehabilitation.

WATER BALANCE OF ISRAEL

Major Annual Sources vs. Major Annual Uses
(Data of 1995 - 6, After Kally, E., 1997)

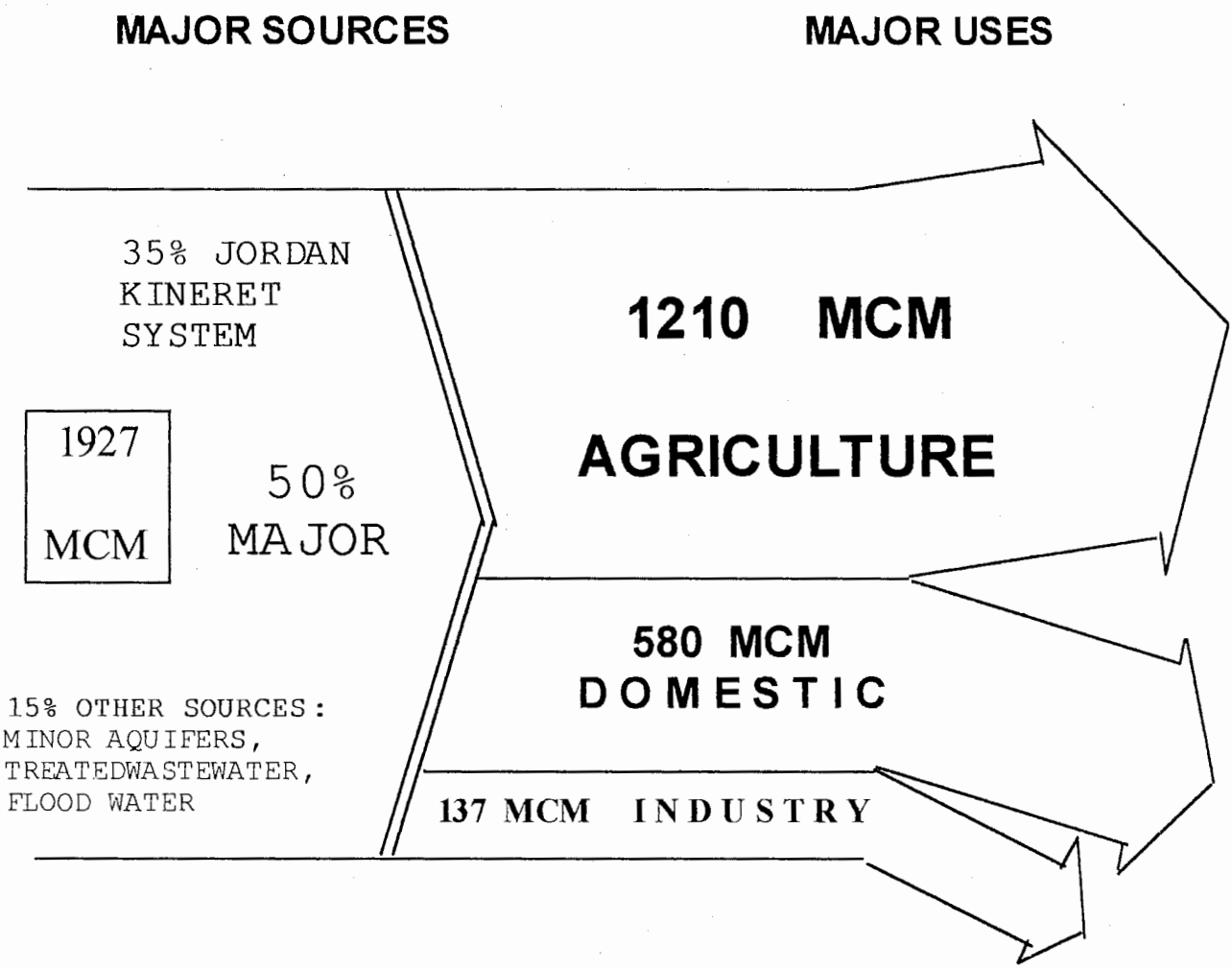

Controlled measurements indicated that by using domestic water saving instruments it was possible to save 25 -50% of the domestic water consumption (Kahana & Avnon'95).

It is estimated that a very large number, in the range of hundreds of thousands of units of domestic water saving instruments, were already installed in Israel until now. These instruments were installed in many thousands of houses, institutions, hotels, and other public or private sites.

A further estimation is that on a nation-wide scale, DWC level of about 20% of the total domestic consumption in Israel is actually achieved by using the range of available DWC equipment (Levertov, 1995). This saving is equivalent to about 130 MCMY out of a total of about 640 MCMY domestic water consumption, projected for the year 2010 in Israel, and is achieved without causing any inconvenience to the public.

In a few instances, such as that of the DVFC (Dual Volume Toilet Flushing Cistern), the integration of water saving devices in the plans of new water systems (e.g. new buildings) are regulated by the law and it is now an official standard. Similar standards for other wqater saving devices are expected to lead to a broader use of water saving instruments, followed by a significant water conservation. The Israeli Water Commission is the official institute coordinating the promotion of the subject of DWC in Israel, by performing activities such as:

- Situation reviews
- Preparation of beads, including definition of the detailed technical demands.
- Projects follow - up.

It should be mentioned that the Israeli experience includes many cases in which over-enthusiastic people (driven by too - active salesmen) used instrument, declared as "patents" for water saving, which caused damages to the system bigger than their proven benefits (e.g. hot water passage to the cold water pipes: ruined flushing cisterns and water meters, caused pipes blocking and noise from the pipes). Therefore, only officially tested and approved instruments for DWC should be installed, usually by skilled and authorized technicians.

1.3 Water saving devices in home use

Regulation of quality of equipment is of high importance. By cooperation among several professional bodies Quality Standards and Quality Criteria for the various instruments were formulated.

The most important single domestic water use is toilet flushing. It can be seen from Fig. 2 that toilet flushing is the biggest water consumption item (40%) hence reduction of this item has the largest potential for domestic water saving. Based on this assumption it was decided to develop a dual volume toilet flushing cistern (DVFC) instrument. The "history" of development have passed stages of trouble shooting which were caused by non-satisfying washing of the closet stool. As a result of this, several changes were done in the closet stool design and a revised regulation for a minimal height of installation of the cistern above the lavatory seat (55 cm) was introduced.

The Israeli Quality Standard Regulations (IQSR) for flushing cisterns (no. 851) had been revised and updated several times. The updated regulation requires now two water flushing volumes, of 4.5 and 9.0 liter, that can be chosen according to the user's will. The DVFC became very popular in Israel and it became regulated to install this type of flushing system in all new buildings. There are several manufacturers of this equipment.

Also important are the Israeli Quality Standard Regulations (IQSR) no. 1482 and no. 1483 for pressure regulators in the shower and tap heads. The demands of IQSR 1483 deal with:

- Degree of flow-rate accuracy.
- Range of operation pressures.
- Consistency of flow - rate.
- Building materials and screw threads strength.
- Pressure resistibility.
- Thermal resistibility.
- Quality of metal coating.
- Limitation of handle heating rate.

Distribution of the domestic water consumption in Israel

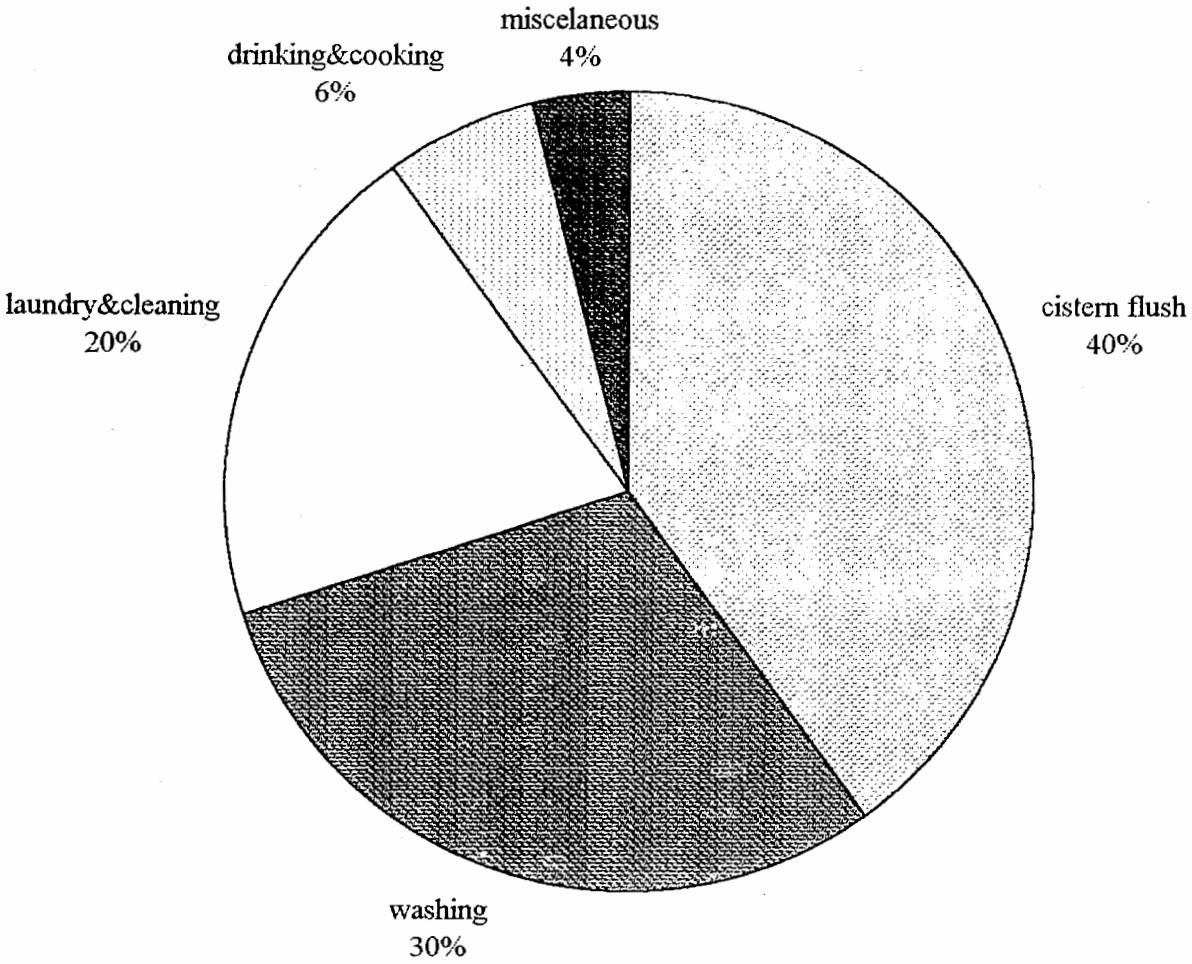

The available flow regulators are installed before every individual water user (e.g. tap, shower head etc.). It limits the water flow rate to a convenient flow for the user. This preset flow rate cannot be exceeded when the water pressures are getting high due to pressure fluctuations.

1.4 Water saving devices in home gardening

The total nationwide water use in Israel for gardening is about 70 MCMY. The area of gardens (about 2,800 ha in urban areas and 4,600 ha in rural areas) is growing at a rate of 3% every year. While the area is growing the recommended water duty for gardening is lowered to 37 MCMY only! In a country where the irrigation season lasts for 8 months a year this situation requires drastic water saving activities, if high level of gardening is still desired.

Many activities were started in order to achieve optimal use of water and to reduce to minimum water wastage. Among the most important activities for water saving in home gardening (HG) are the following activities:

* Operating of **model gardens** in every region of the country, where people can learn the agro-technical skills of how to save water in HG. The instruction and demonstration activities in the **model gardens** is done by authorized personnel and the activity is supervised by governmental authorities and private manufacturers in cooperation.
* Change the common species from humid plants to Mediterranean or even desert plants.
* Reducing the irrigated lawns areas.
* Improve water application equipment: part-circle sprinklers, drippers (sub-soil or on-ground)
* Use of watering control equipment (water meters, controlled valves, soil moisture sensors, automatic controllers etc.)

The leading body in the activities for water saving in HG is the "Garden Irrigation Efficiency Department". This department was set-up by the Water Commission and the National Gardening and Landscape Association and is financed (partly) by the Water Commission. The Department cooperates with the extension services of the Ministry of Agriculture, with the ICWE and with the private sector (manufacturers of gardening equipment, control, etc.).

Much education and extension activities are performed in order to disseminate high norms of water conservation and of lowering peak demands (e.g. by irrigation at night -time). The target audience is not only the wide public but also professional gardeners, architects and agricultural constructors.

The use of proper and high standards agrotechniques is also important for water saving in HG. Important points are:

* Using tensiometers to determine optimum irrigation.
* Use of organic and inorganic mulches or use of hygrometric additives to the soil to prevent soil cracking and maintain good water holding capacity.
* Weed control.
* Soil cultivation to improve infiltration and minimize soil cracking and water losses.
* Pruning and reduction of foliage to reduce evapotranspiration.

In subsequent paragraphs of this report (Case Study 4 and Appendices 7 to 10) technical details of irrigation systems and controls are given in details.

1.5 Home scale compact wastewater treatment facilities

The use of reclaimed wastewater (WW) in the Israeli agriculture is very common. It presently exceeds 50% of the WW and it is planned to reuse almost 80% of the WW in the near future. Home gardening (HG) is a big water consumer and in dry climate devoting fresh water for this purpose is unreasonable. It is therefore becoming more and more popular to use treated household effluents for HG irrigation. According to private manufacturers many compact WWT units were marketed in the last few years. However, an exact estimate of the extent of reclaimed WW use for HG irrigation could not be obtained.

Technical details of the WW treatment systems are given in Chapter 3, Case Studies 4 and 5 and in Appendix 6 of the present report.

II. Methodology

The Information for the present report was gathered from private and public sources. Reports were obtained from the Water Commission, from the ICWE (Israeli Center for Waterworks Equipment), from various departments in the Ministries of Agriculture, Education, from regional R&D Centers and from Environmental Quality Units.
In most case telephone conversations, meetings and exchange of written information were done.
Similar information collection technique was used in the contacts with delegates of equipment/systems manufacturers from the private sector.

3. Case studies of Best Practice/Programs

Case Study 1: Water conservation programs related to testing the impact of water saving instruments in domestic use: Dual Volume Toilet Flushing Cistern (DVFC), Pressure Regulated Flow Controller (PR-FC) and Apartment Pressure Regulator (APR)

Program 1.1: Testing the impact of domestic water saving instruments in several Israeli Police facilities

1. **Goals and Objectives**: Testing the water saving potential of domestic water saving equipment in a "field experiment".

2. **Implementor**: The Israeli Center for Waterworks Equipment (ICWE) in cooperation with the Israeli Police (IP).

3. **Context**: Municipal DWC.

4. **Target audience**: Urban domestic population, institutions, the army, the police, etc.

5. **Description of Activities**: The installed equipment in this project included:
   - 1064 Pressure regulated flow control devices (PR-FC),for shower heads,
   - 2032 Pressure regulated flow control devices (PR-FC),for sink taps,
   - 1422 Dual volume toilet flushing cisterns (DVFC) - this was achieved by replacing the existing inner mechanism of the common (single volume) flushing cisterns by DVFC.

     The manufacturer of the PR-FC equipment was Bermad Evron.
     The manufacturer of DVFC devices was Plasson.
     The project was executed and followed-up in close cooperation with the Dept. of Construction and Store-keeping of the Israeli Police.

Technical Description of the equipment: The DVFC is a device designed to supply either 9.0 liter volume per operation for solids flushing or 4.5 liter volume, for liquid waste flushing. There are two separate handles and the operator should simply decide which handle to operate according to the desired volume. For technical details see Appendix 1.
The PR-FC is a device designed to pass a pre-determined water flow-rate under changing hydraulic pressures in the water line (for technical details see appendix 2). The faucet consists of a metal casing in which a special, dome-like rubber ring (orifice), is installed. The orifice is made of a flexible rubber with high resistance for corrosion, temperature change and chemicals. There are several holes in the orifice ring designed for the water pass. When the pressure rises the ring's dome moves against the cone shaped base- plate, thus reducing the water-path profile. It was pre-designed that the proportional reduction of the water-path profile, coupled with pressure increase will keep a constant water flow-rate. The installation of PR-FC is done individually for every regulated shower-head or sink tap.

Working program: The water readings in 6 central facilities of the Israeli Police (5 headquarters and one camp) were recorded during one year before the water saving devices were installed, and then were again recorded one year after the installation. The readings were corrected for the growth in manpower in the facilities under measurement during the 1year experiment period and also for the leakage volumes which were found (and fixed) during the installation of the water saving devices.

6. **Gender Impact**: Equal impact

7. **Record of Success in solving problems**
The results of water consumption during the two years of measurements in 6 locations (5 headquarters and one camp) of the Israeli Police are given in Table 1. The table depicts the water consumption in each location before and after the installation of water saving devices. Table 1 also gives the water savings, calculated both in m^3 and in percentages.
From Table 1 it can be seen that the combined water conservation level achieved by installing the PR-FC and DVFC instruments was 18.2%.

8. **Relevance to the region:** The potential use of the described instruments is universal. The degree of saving achieved is very relevant to Israel and the region, mainly (but not only) for urban populations.

9. **Explanation of how environmentally friendly**: The equipment in use do not endanger the environment in any way. The water saving results indicate a significant contribution to the water balance and hence, prevention of aquifer thinning.

Table 1: Summary of water metering in 6 police sites before and after installation of water saving devices

Location / Parameter	H.Q. 1	H.Q. 2	H.Q. 3	H.Q. 4	H.Q. 5	Police camp	Total
TWC in the year before installation(88/89)	43,362	66,998	192,791	89,728	152,042	214,832	759,753
TWC in the year after installation(89/90)	36,279	60,435	163,242	80,293	135,821	145,329	621,399
Water saving per year, m^3	7,083	6,563	29,549	9,435	16,221	69,503	138,354
Water saving, %	16.3	9.8	15.3	10.5	10.7	32.3	**18.2%**

Abbreviations: H.Q. = Headquarters
TWC = Total Water Consumption

10. List of Contacts:

1. The Israeli Center for Waterworks Equipment (ICWE)
   Bldg. of the Israeli Standards Institution,
   H. Levanon st. Ramat Aviv
   Tel-Aviv, 69977
   ISRAEL
   Tel.: 972-3-5454140 Fax : 972-3-5454052
2. PLASSON,
   Maagan Michael
   D.N. Menashe, 37805
   ISRAEL
   Tel. 972-6-6394711
3. BERMAD
   Evron 25235
   Israel
   Tel. 972-4-9855311

Program 1.2: Follow-up of the efficiency improvement in domestic water consumption resulting from the installation of domestic water saving equipment in the village of Ma'ale Efraim (located in a high mountains area)

1. **Goals and Objectives:** Test the impact of installation water saving equipment of two types (DVFC, PR-FC) on the water consumption in dwelling houses of a village located in the high mountains area (central part of the country).

2. **Implementor**: The ICWE in cooperation with the local municipality and the Manufacturer of water saving equipment: Bermad Evron.

3. **Context:**
Water saving in municipal area in the domestic sector in a settlement with typical large variations in the water pressure caused by altitude differences among various water consumers.

4. **Target audience**: Universal. Special emphasis on private house owners in settlements characterized by high variations in water pressures among the different apartments served and high daily water pressure fluctuations.

5. **Description of Activities**: The impact of two (2) types of instruments for domestic water conservation was tested in the framework of this program:

a. Pressure Regulated - Flow Control Devices (PR-FC) installed before every individual water consumers (sink tap, shower head etc.).
b. Dual volume flushing cisterns (DVFC).

In the program 320 individual houses participated, and 6 - 7 instruments were installed in each participating house.
Technical description of the instruments used: PR-FC and DVFC, is given in Appendices 1 and 2.
Since the settlement in which this test was conducted is located in a mountains area, there is a large water pressure difference among the houses, according to their topographical location. The average pressure is 4.5 atm. but in some houses, located in the lower part of the settlement, the pressure may reach a value of 6-7 atm. The installation of equipment did not cause any reported complains about the water supply from the participating population.
In order to test the impact of the installed equipment on water saving 6 months readings of the water meters, before and after the installation of equipment, were compared for the houses participating in the program. (water metering included the water for home-gardening consumption, which was not treated in the framework of this specific program). The water metering before and after installation were done in the same season of two successive years. Summary of the results is given in Tables 2(a) and 2(b).

6. **Gender Impact:** Equal impact.

7. **Record of Success in solving problems**: During the period monitored in this program the reported water saving was 63.9 m^3 water/house per 6 months, which represent 36.2% of the water consumption, including the home-gardening water. The results (according to Gynsburg, ICWE 1992) are summarized in Table 2 (a).

Table 2 (a) : Water metering results before and after installation of water saving devices in Ma'ale Efraim

Period	No. of houses	Estimated No. of people served	Water consumption (6 month), m^3	Water consumption per apartment for 2 months, m^3
March 90-Aug. 90 Before installation of water saving devices	283 - 306	1170 - 1260	51,779	49.5 - 63.5
March 91- Aug. 91 After installation of water saving devices	319 - 321	1315 - 1325	36,025	29.8 - 43.3

The major parameters of water consumption and saving, which were calculated from the data presented in Table 2 (a), are presented in Table 2 (b).

Table 2(b): The major calculated water consumption parameters in the Ma'ale Efraim program

Water consumption parameter	Before installation of water saving devices	After installation of water saving devices	Difference
Total water consumption per house for 6 months (m^3)	176.5	112.6	63.9 m^3 (36.2%)
Personal water consumption for 6 months (m^3/cap)	42.5	27.1	15.4 m^3 (36.2%)
Daily water consumption per apartment (m^3/d)	0.81 - 1.02	0.49 - 0.64	0.32 - 0.38
Daily per capita water consumption (lit/d)	195 - 246	118 - 154	77 - 92

The results in Tables 2(a) and 2(b) indicate a very significant reduction in all the parameters of water consumption (36.2%) following the installation of the water saving devices.
Further water consumption savings are planned in the same settlement by installing home gardening saving devices and by implementing a program for domestic wastewater treatment and reuse for public gardens irrigation.

8. **Relevance to the region**: Water saving in high mountains area is very important because of the high energy investment required to bring the water to high elevations from the water sources, located usually in the coastal plain of Israel. Settlements in the high mountains area in Israel are usually located far from the major water supply sources, a fact that further increase the energy cost needed for water transportation to these remote places, and makes water saving even more significant.

9. **Explanation of how environmentally friendly**: Using the water saving devices recorded in this program does not have any adverse environmental effect.
The water and energy savings which were recorded in this program are of high importance, especially in mountains and remote areas.

10. **List of Contacts:**
    1. The Israeli Center for Water works Equipment
       The Israeli Standards Institution
       H. Levanon st. 42, Ramat Aviv, 69977 Tel:972-3-5454140 Fax: 972-3- 5454052
       Israel.
    2. Bermad
       Evron 25235
       Israel
       Tel. 972-4-9855311

Program 1.3: The influence of Pressure Regulated - Flow Control Device (PR-FC) installation on domestic water saving in Be'er Sheva

1. **Goals and Objectives:** Determining the water saving potential of a flow regulating device (Pressure Regulated - Flow Control Device (PR-FC) installed for domestic use in a large city (Be'er Sheva).

2. **Implementor:** The Israeli Center for Waterworks Equipment in cooperation with the municipality of Be'er Sheva.

3. **Context**: Universal. Special emphasis on apartments in urban area located in arid zones (Be'er Sheva City is located in the Negev - the desert part of Israel).

4. **Target audience:** Citizens of urban areas, especially in dry (arid or desert) conditions and conditions of water shortage.

5. **Description of Activities:** The program extended for 12 years (1977-1988).
The water pressures in the monitored area ranged between 4.5-5.5 atm.
The water saving devices were installed in 218 apartments, 5 devices per apartment, as follows: 1 faucet in the shower-head, 2 in the hot and cold water taps of the bathroom sink and another 2 in the water battery of the kitchen sink. All the flow-regulators ere preset to a nominal flow-rate of 2 GPM (or 450 lit /hr).
In order to protect the operation of the flow regulators, filters were installed on the main water supply line of each apartment.
The monitoring program included periodical checking of the number of persons living in each of the participating apartments and reading of the water meters once every 2 months. Remarks were taken about the general situation of the water system e.g. leakage, failures etc. The results of the monitoring program are summarized in Table 3.

6. **Gender Impact**: Equal impact.

7. **Record of Success in solving problems:** The results depicted in Table 3 indicate a saving range of between 7.9% to 15.8% per year. The average water saving for the 12 years experiment was 11.4%. According to the results obtained, there is an increase in the summer consumption of water but this does not change the degree of **water saving** which resulted from flow regulation.
There were no complains of the participating citizens on inconvenience in water consumption or on technical problems. The flow regulators were cleaned once every 3-4 years, although they were not clogged to a significant extent.

8. **Relevance to the Region:** The region in which the experiment was conducted is very dry (Negev desert) and suffers a severe water shortage problems. All the water are pumped along very long pipes from a remote source. Most of the water consumption in this area is for domestic purposes, therefore DWC is of high significance in this area.

Table 3: **Results of the daily per capita water consumption and savings (lit/d) in the Be'er Sheva experiment of flow-regulator installation.**

Daily per capita water consumption, lit/d in the year:	1977	1978	1979	1980	1981	1982	1983	1984	1985	1986	1987	1988
Without flow regulators	120.5	118.5	114.6	115.3	113.4	113.1	120.5	116.3	117.6	118.7	122.6	118.9
With flow regulators	106.6	100.2	100.2	102.3	100.6	102.7	101.5	104.6	101.1	109.4	110.2	109.5
Saving, in liters	13.9	18.3	14.4	13.0	12.8	10.4	19.0	11.7	16.5	9.3	12.4	9.4
Saving, %	11.5	15.4	12.6	11.3	11.3	9.2	15.8	10.1	14.1	7.8	10.1	7.9

BE'ER SHEVA : WATER SAVING IN A RESIDENTIAL ZONE BY FLOW REGULATORS

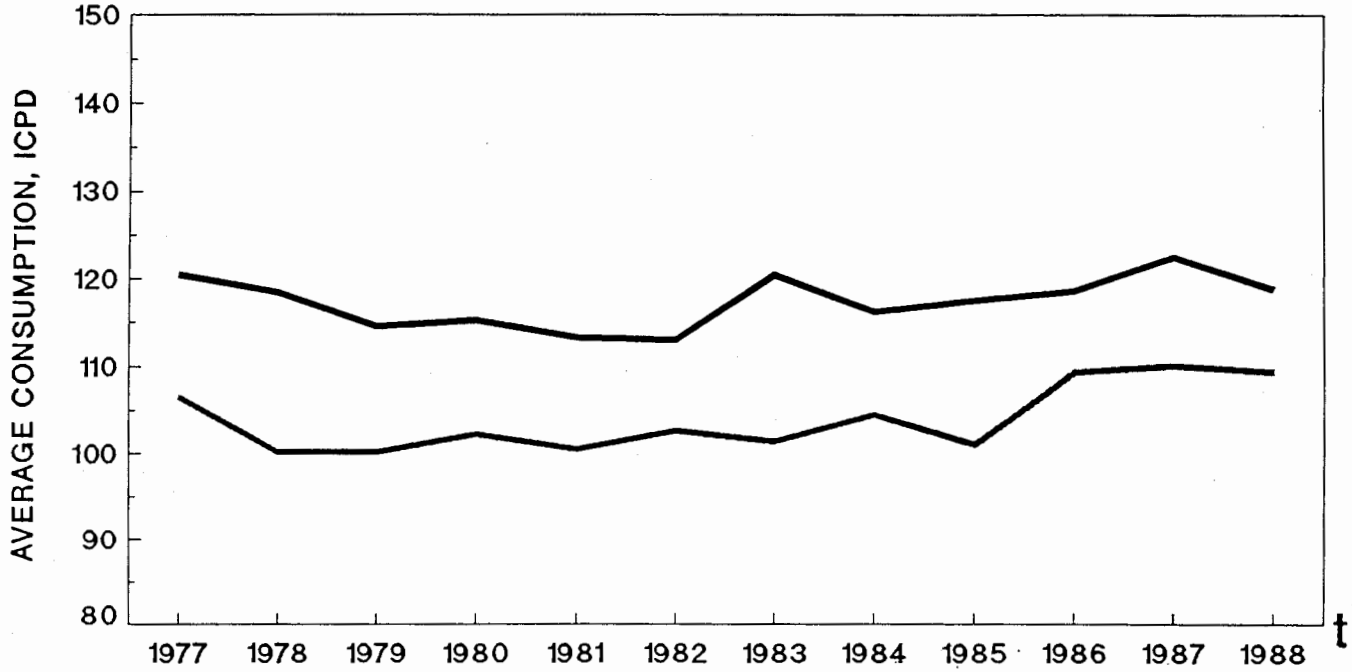

CONSUMPTION LCPD	1977	1978	1979	1980	1981	1982	1983	1984	1985	1986	1987	1988
NO REGULATION	120.5	118.5	114.6	115.3	113.4	113.1	120.5	116.3	117.6	118.7	122.6	118.9
WITH REGULATION	106.6	100.2	100.2	102.3	100.6	102.7	101.5	104.6	101.1	109.4	110.2	109.9
SAVING LIT/DAY	13.9	18.3	14.4	13.0	12.8	10.4	19.0	11.7	16.5	9.3	12.4	9.4
SAVING IN %	11.5	15.4	12.6	11.3	11.3	9.2	15.8	10.1	14.1	7.8	10.1	7.9

ICWE

FIG. 4

9. **Explanation of how environmentally friendly:** Domestic water conservation will be beneficial for the environment since it will contribute to less demand for water desalination in the desert area and will save energy.

10. **List of Contacts:**

1. The Israeli Center for Water works Equipment
   The Israeli Standards Institution
   H. Levanon st. 42, Ramat Aviv, 69977
   Israel.
   Tel:972-3-5454140 Fax: 972-3- 5454052
2. Bermad Ltd.
   Evron, 25235
   Israel
   Tel. 972-4-9855311

Program 1.4: Follow-up of the water saving extent caused by installing water saving devices in apartments of "Mevaseret Zion"

1. **Goals and Objectives:** Testing the water Saving potential of several domestic instruments, including Dual Volume Flushing Cistern and Flow Regulators in a high-mountain settlement.

2. **Implementor:** The Israeli Center for Waterworks Equipment.

3. **Context:** Water conservation in urban settlements in high mountains area.

4. **Target audience:** Urban area population especially this of areas suffering from special problems of water shortage.

5. **Description of Activities:** The experiment was conducted in 200 houses in the "immigrants absorption camp" of "Mevaseret Zion". Water consumption measurements after installation of the water saving devices were taken for a period of one year {July 1988 to June 1989) and compared to the water readings of the same period of time, one year before the installation. The measurements were corrected to the actual number of people served in each period.
The devices which were installed in this program were:

a. Pressure Regulated - Flow Control Device (PR-FC), described in Appendix 2.
b. Dual Volume Flushing Cistern (DVFC), described in Appendix 1.

While installing the water saving devices, water leakages were also fixed.
The line water pressure is about 3.0-3.5 atm.
The results are given in table 4.

Table 4: Water consumption results before and after installing water saving devices in the "Mevaseret Zion" experiment

Month	No. of people served	Total water consumption m^3	Monthly per capita water consumption m^3	Daily per capita water consumption lit.	Remarks
7.87	875	5500	6.3	203	Before installing water saving devices
8/87	802	5950	6.18	199	
9.87	800	4800	6.00	200	
10.87	768	4950	6.44	208	"
11.87	758	4950	6.53	218	"
12.87	840	3488	4.15	134	"
1.88	853	3489	4.09	136	"
2.88	837	3529	4.22	140	"
3.88	834	3529	4.23	141	"
4.88	844	5364	6.35	205	"
6.88	869	5364	6.17	206	"
7.88	905	3375	3.72	120	After installing saving devices water
8.88	922	3375	3.67	118	
9.88	867	3559	4.10	137	
10.88	907	3560	3.92	126	"
11.88	922	3904	4.23	141	"
12.88	909	3904	4.29	138	"
1.89	922	2885	3.12	101	"
2.89	935	2885	3.08	110	"
3.89	935	2263	2.42	78	"
4.89	923	2262	2.42	82	"
5.89	911	3969	4.35	140	"
6.89	906	3969	4.35	146	"

Analyzing the results in Table 4 shows that:
The average monthly per capita water consumption before installing water saving devices was: $5.58m^3$
The average monthly per capita water consumption after installing water saving devices was: $3.64m^3$
The average yearly water saving was therefore: 34.8%

6. **Gender Impact**: Equal impact.

7. **Record of Success in solving problems:** The one year experiment indicated that by using both the DVFC and Pressure Regulated - Flow Control Devices (PR-FC) a domestic water saving of 34.8% can be achieved!

MEVASERET ZION : WATER SAVING BY RETROFITTING
(200 APARTMENTS, DUAL-ACTION FLUSHING CISTERNS, FLOW REGULATORS)

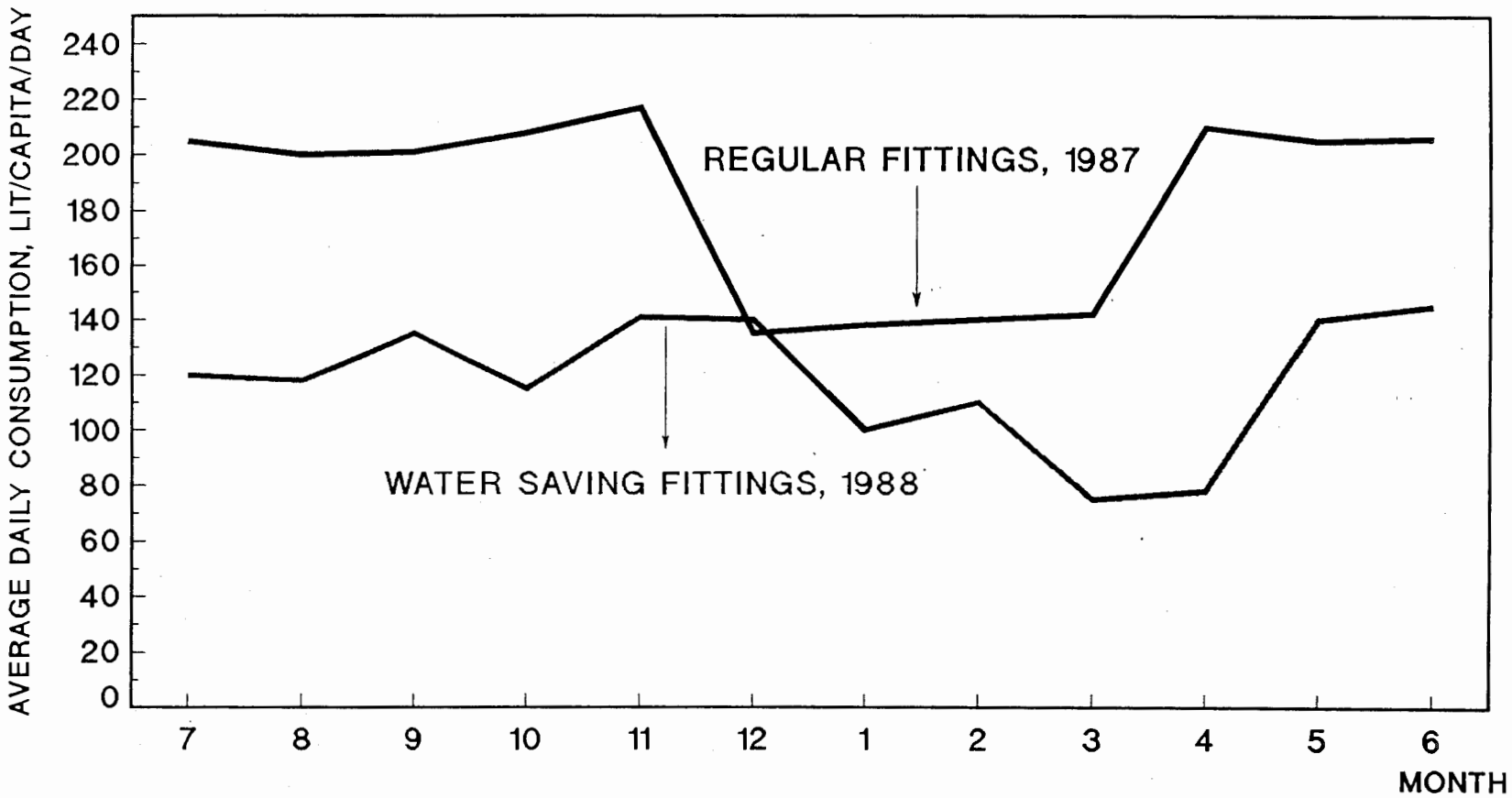

FIG. 3

ICWE

8. **Relevance to the region:** The water saving of 34.8% recorded in this program is of special importance for the region, mainly in cases like "Mevaseret Zion", when the settlements are located in high mountains area. In such cases, water pumping from the water sources in the coastal plain is expensive and requires much energy.

9. **Explanation of how environmentally friendly:** The use of the water saving devices recorded in this program does not cause any environmental damage. On the other hand, both water and energy savings, due to less pumping demands, are beneficial for the environment.

10. **List of Contacts:**

1. The Israeli Center for Waterworks Equipment (ICWE)
   Bldg. of the Israeli Standards Institution,
   H. Levanon st. Ramat Aviv
   Tel-Aviv, 69977
   ISRAEL
   Tel.: 972-3-5454140 Fax : 972-3-5454052
2. PLASSON,
   Maagan Michael
   D.N. Menashe, 37805
   ISRAEL
   Tel. 972-6-6394711
3. BERMAD
   Evron 25235
   ISRAEL
   Tel. 972-4-9855311

Program 1.5: Testing of the water saving impact of apartment pressure regulators (APR) - Tel Aviv

1. **Goals and Objectives:** Follow-up of the water saving potential of pressure regulators, installed on the main water entrance lines to dwelling apartments.

2. **Implementor:** The Israeli Center for Waterworks Equipment (ICWE).

3. **Context:** Urban.

4. **Target audience:** Owners of dwelling apartments in urban and/or other types of settlements.

5. **Description of Activities:** The program included a seven (7) months monitoring period in which the water consumption was compared between 9 apartments, where Pressure Regulators (APR) were installed on the main water supply line, and 5

reference apartments. Technical description of the APR's is given in appendix 3. All the apartments are in the same building. Comparisons of water consumption were made between apartments on the same floor, where APR's were or were not installed. Parallel to monitoring the water meters of the apartments, the number of people living in each apartment was also recorded.
The results of comparison between the water consumption in the apartments with and without APR's are shown in Table 5.
From the results shown in Table 5 it may be concluded that the average daily water consumption in apartments with APR's is 131lit. while in the apartments without APR's the average daily water consumption is 168lit. per capita. This results indicate a 22% water saving due to installation of the Pressure Regulators in the apartments. There were no complains of the participants on failures in APR's or inconvenience in water consumption.

6. **Gender Impact**: Equal impact.

7. **Record of Success in solving problems:** The average recorded water saving of 22% due to installation of APR's and controlling the water pressure fluctuations may be regarded as a significant achievement.

Table 5: Daily per-capita water consumption in apartments with and without main line Pressure Regulators (Monitored period: Oct. '87 - April '88)

PR installation	Floor	Apt.#	1987 water consumption			1988 water consumption			
			18.10	16.11	23.12	25.1	23.2	23.3	27.4
without	1	1	78	138	279*	121	184	-	133
without	1	2	202	224	229	197	241	-	200
without	3	9	276	218	225	222	218	-	248
without	3	10	170	155	155	167	155	-	164
without	4	13	241	230	216	212	218	-	219
without	4	14	134	172	126	131	126	-	142
without	5	17	138	146	121	129	121	129	128
without	5	18	170	161	171	161	161	-	162
without	6	22	122	121	101	113	103	-	100
without	**Average**		**170**	**174**	**168**	**161**	**170**	-	**166**
with	1	4	20*	155	125	121	121	-	128
with	3	12	172	181	201	174	172	-	178
with	4	16	44	103	111	101	46	-	76
with	5	20	178	69	157	161	172	183	285*
with	6	24	115	110	97	103	96	103	108
with	**Average**		**127**	**124**	**138**	**132**	**121**	**155**	**122**

* Daily Water Consumption of less than 40 lit. per capita or more than 250 lit. per capita were not included in the calculations of average consumption.

8. **Relevance to the region:** Since water pressure fluctuations is typical to so many places, and may be caused by so many reasons, the importance of the APR devices to water saving may be regarded as universal.

9. **Explanation of how environmentally friendly:** The use of APR devices does not cause any environmental risk. The water saving achieved (of 22%) may be regarded significant in protecting natural water resources. Another aspect of protecting natural water resources is the protection APR's give against pipes damages which might be caused by an occasional water hammer.

10. **List of Contacts:**

1. The Israeli Center for Waterworks Equipment (ICWE)
   Bldg. of the Israeli Standards Institution,
   H. Levanon st. Ramat Aviv
   Tel-Aviv, 69977
   ISRAEL
   Tel.: 972-3-5454140 Fax : 972-3-5454052
2. BERMAD
   Evron 25235
   ISRAEL
   Tel. 972-4-9855311

Program 1.6: Best Practice - Technological improvement: Use of Dual Volume Flushing Cisterns (DVFC) in Israel

1. **Goals and Objectives:** Review the use of DVFC in Israel and check its impact on domestic water saving.

2. **Implementor:** Plasson, Maagan Michael In cooperation with Ben-Gurion University, Be'er Sheva.

3. **Context:** Domestic water saving device for universal use in toilets.

4. **Target audience:** Apartment owners

5. **Description of Activities:** A thorough review of the domestic water consumption had shown that **toilet washing** is the biggest item of domestic water consumption (40% ! see Fig. 2). It was therefore decided to develop equipment that will help to reduce this item. As a result of this consideration the Dual Volume Flushing Cistern (DVFC) was developed. Technical description and photographs of this device were given in Appendix 1.
Nation wide sample of consumers, reviewed by Ben-Gurion Univ., Be'er Sheva

indicated that 16% of the domestic water consumption may be saved by using the DVFC device. In the Israeli water balance this may contribute up to 70 MCMY to the national water balance!.
Since March 1991 and after passing all the tests, the DVFC had granted the 851 formal quality note of the Israeli Standards Institution (ISI). This quality note demands that all the newly installed flushing cisterns will have two optional volumes of flushing water: 4.5 lit. for liquid waste flushing and 9 lit. for solids flushing. The practical meaning of this ISI note is that production, import or marketing of flushing cisterns, other than the DVFC became illegal.

6. **Gender Impact**: Equal impact.

7. **Record of Success in solving problems:** The DVFC device was tested under controlled conditions and proved to save over 16% of the domestic water consumption and over 40% of the water required for lavatory flushing. The potential water saving in Israel due to the DVFC device is estimated at up to 70 MCMY and the practical water saving is estimated at 45 MCMY! Since the DVFC device had gained its ISI note (no. 851) many thousands of this device were marketed in Israel and abroad.
The instrument is technically reliable. There are no complains on inconvenience in use or on hygienic/sanitation problems by the water users.

8. **Relevance to the region:** In a country like Israel the current saving of 45 MCMY due to the use of DVFC devices means a 2.1% saving in the gross national water budget (of about 2100 MCMY) In the future it is expected that the water saving due to DVFC use will grow up to about 70 MCMY! This level of saving is about 3.3% of the gross national water balance.

9. **Explanation of how environmentally friendly:** The DVFC has no adverse environmental impacts. It's use may be beneficial for the environment in preventing thinning and salination of over-used aquifers.

10. **List of Contacts:**
    1. PLASSON,
       Maagan Michael
       D.N. Menashe, 37805
       ISRAEL
       Tel. 972-6-6394711
    2. LIPSKI PLASTIC INDUSTRIES
       Barkan Industrial Zone (Stage H)
       Barkan
       Tel. 03-9366101, 9366835 Fax: 03-9366642

Case study 2 : Best practice - Technological Improvement: Use of Electronic Operated (ELOP) Automatic taps

1. **Goals and Objectives:**
   - Water saving.
   - Hygienic protection.

2. **Implementor:** Madgal, Kibbutz Glil-Yam.

3. **Context:** Municipal - universal: domestic apartments, institutions, hospitals, laboratories, facilities for disabled persons etc.

4. **Target audience:** Apartment owners, technical managers of institutions, hospitals, laboratories, cinema and schools, airports, gas stations etc.

5. **Description of Activities:** An automatically operated tap in which the water flow is activated by sensing the proximity of the user's hands. The moment the hands are removed from the immediate vicinity of the tap - the water flow stops.
There are two major models of the Madgal automatic, infra-red sensor operated faucet (tap): The Smart-Spout series, models 3408 and 3708 and the Auto-Flow series models 3980 and 3280 (for technical details see Appendix 4). The infra-red sensor is activating the tap by sensing the hands beneath the tap. The flow of water stops immediately by removing the hands. Continuous flow of water can be easily started or stoped very simply as the user wishes. It is easy to preset the tap for a convenient water flow rate.
The use of this device saves much of the water wasted when operations which do not require continuous water flow are executed by the user. Such operations are: washing the hands or face with soap, washing dishes, shaving etc. The water saving potential of these automatic-operated taps is estimated at 80%.
Using this kind of "hands free" taps is also hygienic since the risk of transferring bacteria from the hands of one user to another user disappears.
The instrument is powered by batteries. It is absolutely safe for the user since there are no electrical connections.
In the last 5 -6 years thousands of automatic taps were sold by various Israeli manufacturers for private and institutional use.

6. **Gender Impact**: Not much. There might be some "gender impacts" in cases that specific uses of water, such as shaving or dish washing, are gender dependent. This should be considered especially in cases that installation of these devices is considered for institutions or camps serving specifically one gender or the other.

7. **Record of Success in solving problems:** The information given by the manufacturer indicate selling of thousands of units of the automatic faucets. The potential water saving of each installed tap is estimated at 80%.

8. **Relevance to the region:** The distribution of domestic water consumption in Israel shown in Fig 1indicates that about 30% of the domestic water consumption is required for washing. This is the second largest item of water consumption. Saving of 80% of the water expenses in this item is therefore of high significance.

9. **Explanation of how environmentally friendly:**
The equipment does not endanger the environment when properly maintained. The device is usually powered by batteries (no electrical connection) therefore it may risk the environment in case that the batteries are not disposed properly (exactly like batteries of any other electronic device).
The typical life expectancy of the taps' batteries are 1-5years. The problem of safe disposal is not specific for these batteries, and must be solved for all other batteries as well.

10. **List of Contacts:**
Madgal,
Kibbutz Glil-Yam(46905)
ISRAEL
Tel: 972-9-9528964. Fax: 972-9-9528983.

Case study 3: Best Practice: Using various means for water-leak prevention in the domestic water supply system - efficiency review in the City of Eilat

1. **Goals and Objectives:** Reviewing most of the known parameters that may contribute to water leakage or to prevention of water leakage in main domestic water supply systems.

2. **Implementor:** The Israeli Center for Waterworks Equipment (ICWE) and the municipality of the City of Eilat.

3. **Context:** Municipal.
Eilat - the city where this program was executed is located in the south (and driest) edge of the Israeli desert (the Negev). The city of Eilat is very far from drinking water sources and much of the drinking water is obtained by desalination.

4. **Target audience:** Municipalities, especially those that suffer from water shortage.

5. **Description of Activities:** The subject of **water-leak prevention** is not specific for domestic water conservation. Much of it is related to pipe construction and maintenance and is beyond the scope of the present report. This case study will concentrate upon specific products which are relevant to leak prevention in **domestic water supply** systems and.

The general causes of water leakage are usually related to the interactions between the pipe and the water and is also influenced by maintenance activities and different environmental conditions.
The two major factors that increase the effects of corrosion in the City of Eilat are the high temperature, typical for a desert area and the chemical composition of the water. The specific composition is due to mixing of desalination water with brackish water from local wells. This mixing proportion is almost 1 : 1(with some changes according to water availability and demands). This water are characterized by high concentrations of chlorides (up to about 600 mg/L) sulfates (up to about 800 mg/L) and Magnesium ions. The water has a low tendency to form calcium carbonate precipitate on the metal surface of pipes and instruments. The contribution of high sulfate and high Magnesium concentrations is known to be aggressive against some piping components.
The review part of this program covered separately the subjects of piping and of instrumentation. It also included review and analyses of water qualities, of soil qualities, and of interactions between various metals and the water of the city's high temperature.
In the connection of DWC the program had identified detailed specifications of materials and equipment for reliable **domestic water metering in the individual apartments** of the City of Eilat.
The following recommendations for the installation of the water meters were formulated:

1. Multi-Jet Magnetic water meter (manufacturer ARAD - Dalia), Model M 3-5, nominal diameter 3/4".
2. Pipe Joint, polypropylene.
3. Reducing Bushing, made of polypropylene, (manufacturer PLASTIRAN), Cat. no. 0.231.
4. Diaphragm valve, not made of bronze (e.g.) manufacturer ADI, model 8 (threaded - red color, Cat. 1979 C, resistant to hot water). Ball valve is not recommended for that setup.
5. Galvanized nipple.

A schematic layout of the apartment metering system is presented in Fig. 3.

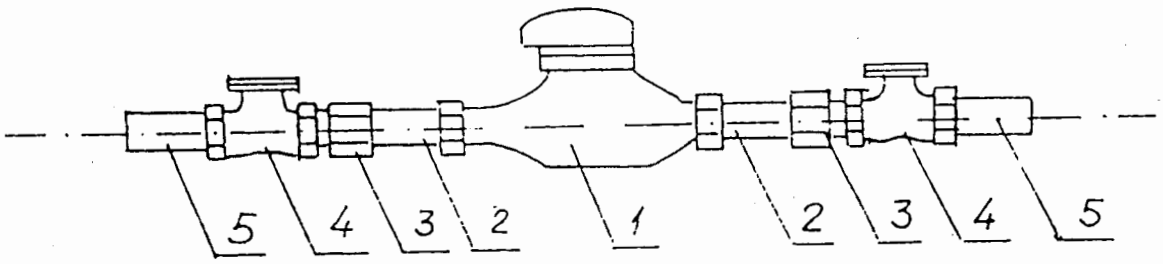

The major difference from existing schemes of apartment measuring systems is the integration of reliable plastic components in replacement of some of the conventional metal parts. This assures higher reliability in measuring and less leakage problems in the domestic metering system.
The considerations for selecting the described layout were mainly related to corrosion prevention and to reliability of equipment, while considering the specific local conditions e.g. desert climatic conditions, local water quality and composition, and the relative reliability of available equipment.

6. **Gender Impact**: Equal impact.

7. **Record of Success in solving problems:** As a result of this program a general replacement of all the water metering system in the municipal area of the City of Eilat was executed, thus improving the reliability of domestic water metering and reducing the leakage problems.
As a result of this program the water losses (defined as the difference between the readings of the **main water supply meters** and the **cumulative reading** of the private water meters) were reduced from as much as 40% to less than 5%, which is in the range of conventional / acceptable water losses in urban systems.

8. **Relevance to the region:** Accurate and reliable water metering is a pre-requisite for domestic water saving by the citizens. This is of special importance in dry climate and under conditions of water shortage. The City of Eilat is a good representative of desert conditions (high temperature, water shortage). The high corrosiveness of the water together with a combination of high day-time temperatures and low night-time temperatures are also typical to similar regions. The successful results obtained by the program in Eilat (reducing water losses from 40% to 5% !) may become a model for similar situations.

9. **Explanation of how environmentally friendly:** Leakage prevention and DWC through improvement of the apartment water metering system in desert areas can reduce water wastage, reduce the energy demand for desalination plants and thus protect the environment in arid areas.

10. **List of Contacts:**

1. The Israeli Center for Waterworks Equipment (ICWE)
   Bldg. of the Israeli Standards Institution,
   H. Levanon st. Ramat Aviv
   Tel-Aviv, 69977
   ISRAEL
   Tel.: 972-3-5454140 Fax : 972-3-5454052
2. ARAD Dalia Ltd.
   Doar Dalia, Ramot Menashe, 19239
   ISRAEL
   Tel. 972-4- 9897911 Fax: 972-4-9897965.

Case study 4: Water saving devices for the home gardening sector

1. Goals and Objectives: (a) Save over 50% of the water used for home gardening by limiting the irrigation volume by either time and/or by demand; (b) Move the hours of demand for irrigation to day hours of low demand for other purposes.

2. Implementor: The Dept. for Efficient Irrigation in the Landscape Gardening(financed Jointly by the water Commission, and the Organization for Gardening and Landscape in Israel), the Agricultural Service for Professional Instruction and the Israeli Center for Waterworks Equipment (ICWE).

3. Context: The agro-technologies and irrigation equipment for water saving in home gardening can serve both municipal and rural area home gardening. Of the total recommended water allocation for home gardening about 40% is allocated for municipal area and 60% is allocated for rural area home gardening.

4. Target audience: Owners of home-gardens in rural and municipal settlements.

5. Description of Activities:
(a) Introduction of ornamental plants with low water demand.
(b) Planned gardening and instructions for balanced irrigation.
(c) Developing irrigation devices coupled with soil moisture sensors (hydrometers).
(d) Irrigation devices coupled with automatic volume control.
(e) Irrigation devices-timer controlled.
The present report will focus on sections (c)-(e) and will supply some technical details on specific devices. Only brief description will be devoted to sections (a) and (b).
Section (c)-(e) are coupled with various types of irrigation controllers based on pre-setting of volume of water or time(duration) of irrigation or on the moisture situation in the soil. It is possible to use for home gardening the simple, non-expensive versions of control devices which were originally developed for agricultural purposes. The most common on the market are the volume controllers, pre-adjusted for the desired volume of water and than left for automatic operation. This kind of controllers are simple, accurate and reliable, available in diameters starting from 3/4" and they save significant quantities of water. Technical description of a variety of irrigation control valves, manufactured by BERMAD, Evron are given in Appendix 6.
Working plan: In preparation are nation-wide regulations for the use of irrigation controllers in home gardening.
It is planned to carry-out an advertisement program to promote the use of irrigation control devices by the community of private garden owners and by professional gardeners.

6. Gender Impact: Equal impact.

2. **Implementor:** Garden owners, professionals (gardeners, farmers etc.)

3. **Context:** Parallel to the wide use of drip irrigation in agriculture and public gardening it became also a most common permanent irrigation system in home gardening.

4. **Target audience:** Home - garden owners, gardeners.

5. **Description of the instrument:** The water is transferred through plastic piping and distributed to the plants by drippers, with nominal flow-rates in the range of a few liters per hour (usually 1-4 l/h).

Drip irrigation is designed to operate at low pressures. The water supply in directed to a certain point by each dripper. The proper distribution of the drippers in the area assures optimal distribution of the water in the soil. The dripper itself is a nozzle with a special design of coil or labyrinth, which force the water to be emitted at a very slow pre-designed flow rate. To resist clogging the design of drippers assures a relatively wide water passage despite the very low flow- rate. Bringing the water directly to the area of the roots of the irrigated plants save the need to irrigate with excess water, as in other irrigation systems.
The limiting factor for the operation of drippers is their tendency for clogging. There are modern developments in the design of the emitters to overcome this problem. Of high importance is the development of water filtration systems and of chemicals that prevent (or even dissolve) clogging. These developments in the last few years permit the use of improved sub-soil drip irrigation systems.
An important peripheral device is the "pressure indicator" which gives the user a **visual indication** of water pressure in the dripperlines. The water pressure is indicated by a colored flag, visible from distance. This device indicates actual operation of the water lines after valves opening. This is important for the home gardener since there is no other quick indication for him that the system is really watering after opening the valves.
Technical description is given in Appendix 7.
In order to achieve regular flow even under changing pressures in the waterlines it is important to integrate in the system another peripheral fitting: a **pressure regulator**. Technical description of this device is also given in Appendix 7.
In order to prevent clogging of drippers it is important to remove suspended solids and bacteria from the water. The use of water filter systems is of special importance when using reclaimed treated effluents for the irrigation of home gardens.

6. **Gender Impact:** Equal impact.

7. **Record of success in solving problems:** The area in Israel irrigated by drippers is estimated at 2.5×10^5 acre. Drip irrigation for 2.5×10^4 acre are sold every year for new areas and for replacement of used systems. Although exact figures for the extent of use of drip irrigation systems for home-gardening are not available it is known to become very popular.

8. **Relevance to the region:** Drip irrigation and mainly, sub-soil systems, are very relevant to water conservation in hot and dry weather areas. In the home gardening it is an important infrastructure component of a **planned irrigation** system, which is another key for water saving.

9. **Explanation of how environmentally friendly:** Non damaging system for the environment. Permits the development of irrigated agriculture and gardening even under dry and hot climatic conditions.

10. **List of Contacts:**

1. The Israeli Center for Waterworks Equipment (ICWE)
   Bldg. of the Israeli Standards Institution,
   H. Levanon st. Ramat Aviv
   Tel-Aviv, 69977
   ISRAEL
   Tel.: 972-3-5454140 Fax : 972-3-5454052

2. The Dept. of Irrigation Eng.
   Israeli Ministry of Agriculture
   P.O.Box 20365, Hakirya
   Tel-Aviv, (54739)
   Tel. 972-3-6971400

3. The Dept. for Efficient Water Use in Gardening
   The Water Commissioner Office
   Maklef St. 1, Hakirya, Tel-Aviv
   Tel: 972-3-6955406
   Fax: 972-3-6956657.

4. Netafim,
   Technical Information Office
   Tel. 972-3-6956237
   Fax: 972-3-6969834

Case Study 4:

Best Practice No. 4.2: Controlled Irrigation

1. **Goals and Objectives**: Save water in home gardening irrigation by supplying the water at an optimal time and an optimal dose (volume). Use of irrigation control timers can also help in reducing the peak demand for water - an achievement by itself.

2. **Implementor:** Manufacturers of equipment, The Israeli Center for Waterworks Equipment, the Israeli Water Commission.

3. **Context:** Domestic water conservation in home gardening. While commercial agriculture can afford complex and expensive irrigation control systems, the devices used for home gardening must be simple and at affordable prices for

private home gardeners.

4. **Target audience:** Owners of home gardens, professional gardeners.

5. **Description of best practices:**
Irrigation controllers consist of two major components: the control unit itself and an electric or hydraulic control valve, which is operated by electric signals sent from the control unit. The control units may have various levels of sophistication. The most simple are those which are pre-set for pre-adjusted time or for pre-adjusted volume. Other control units may sense the soil moisture and the most advanced units (in development now) sense the moisture situation in the plant itself. By the use of irrigation controllers one can control the irrigation according to more than one parameter e.g. soil moisture and day-hour (in order to limit the required irrigation for night hours or hours of low water demand), to control several valves, and to pre-determine the priority of parameters.
By using irrigation controllers the watering of different parts of the garden can be programmed independently. The major components of the irrigation control systems will be described in details in Appendices 7 to 10.
The major components are:
a. Timers (Appendix 10)
b. Volume controllers-dosimeters-watermters (Appendix 7)
c. Soil moisture sensors-tensiometers-hydrometers (Appendix 8)
d. Irrigation controllers (Appendix 9)
e. Peripheral equipment: control valves, filters and pressure regulators.

The major activity in the field of home gardening irrigation control is taking place in the last 15years. Over 25,000 instruments are marketed yearly in Israel.

6. **Gender Impact**: Equal impact.

7. **Record of Success:** It is estimated that 40-60% of the irrigation water can be saved in gardens were irrigation control have been installed (the actual degree of water saving depends very much on the level of irrigation management prior to installation of water-saving equipment).

8. **Relevance to the region:** It is estimated that by using irrigation control equipment, about 25% of the water budget for gardening is actually saved in Israel due to the use of irrigation control equipment.

9. **Explanation of how environmentally friendly:** The use of controlled irrigation make possible home gardening and landscaping in arid or semi-arid areas with minimum water consumption.

10. **List of Contracts:**
    1. NETAFIM Irrigation Equipment & Drip Systems
       Kibutz Hatzerim
       D.N. Hanegev 85420, Israel
       Tel. 972-7-420098
    2. Bermad
       Evron 25235
       ISRAEL
       Tel. 972-4-9855311
    3. Arad Ltd. Dalia
       Doar Dalia, 19239
       Israel
       Tel. 972-4-9897911
       Fax. 972-4-9897965
    4. Galcon, Irrigation Control Equipment
       Kfar Blum
       Upper Galilee
       Israel, 12150
       Tel. 972-6-6948514
       Fax. 972-6-6948777
    5. ICWE
       Bldg. of the Israeli Standards Institution,
       H. Levanon st. Ramat Aviv
       Tel-Aviv, 69977
       ISRAEL
       Tel.: 972-3-5454140 Fax : 972-3-5454052

Case study 5: Home-scale compact wastewater treatment facilities (HS-CWWTF) for the recycling of domestic wastewater for home gardening

1. **Goals and Objectives:** Reuse domestic wastewater, either black or gray water, for home gardens irrigation. The ultimate goal is to save water and the delivery expenses.
2. **Implementor:** garden owners mainly in rural areas, wastewater engineering companies, Water Commission, Ministries of the Environment, Health, and Agriculture.
3. **Context:** Water saving in the domestic and agricultural sectors, wastewater treatment.
4. **Target Audience:** Home-garden owners, professional gardeners.
5. **Description of Activities:**
   Wastewater treatment and reclamation for agricultural use is very common in Irsael. More than 50% of the wastewater is reused for agriculture (more than 230 MCMY). Home gardening cannot use this reclaimed water in large-scale since there is no separate networks for fresh and reclaimed water in the residential

areas. In rural areas it is becoming more and more common to treat the household wastewater for direct use for gardens and landscape irrigation. This is done by different versions of wastewater treatment facilities. Two typical practices are described in sections Best Practice 5.1 and Best Practice 5.2.

6. **Gender Impact**: Equal impact.

7. **Record of Success in Solving Problems:** Hundreds of compact type of wastewater treatment facilities were marketed in Israel. The water is used, partly, for home- gardening and for other landscape purposes.

8. **Relevance to the Region:** Save water, encourage home gardening in dry climates, protect the environment.

9. **Explanation of how environmentally friendly:** Give reasonable solution to the environmental problem of wastewater disposal in houses far from main sewage networks. In preparation are regulations for wastewater quality. It is anticipated that the demands will include filtration and disinfection steps, for health safety reasons.

10. **List of Contacts:**
    1. Water Commission
       P.O. Box 20365
       Tel-Aviv, 64739
       Tel 972-3-6971440
       Fax: 972-3-6971461
    2. The Sakhnin Environmental Quality Unit
       The Center of Water and Wastewater Technologies Demonstration
       Sakhnin, Israel.
       Fax+Tel. 972-6-6745247/8.
    3. The Israel Ecological Services Group Ltd.
       P.O.Box 235
       Gedera 70700
       Israel.
       Tel. 972-8-8597755 Fax. 972-8-8597756
    4. E.P.C. Ltd., Recycling Coating Technologies
       Beit Izhak 42920
       P.O.Box 8564
       Israel.
       Tel. 972-9-8826464
       Fax. 972-9-8612646

Case Study 5:

Best Practice No. 5.1: Home Scale - Compact Wastewater Treatment Plants

Compact Sewage treatment technology with minimal excess sewage sludge, Bio-Robi.

This technology for WWT is based upon aerobic extended aeration activated sludge process. It is designed to fit very small daily flow, and since, practically, it has no excess sludge, it is fully automatic and it is maintenance free, it fits very well to the demands of WWT for single household or cluster of houses.

Tens of plants of this technology were applied in Israel in the last 5 years. It was approved by the health and environment authorities, and was recommended by a scientific authority of high reputation. The reclaimed water is used for HG irrigation.

Principle of operation: three Main tanks: A. Settling, oil-trapping and anaerobic degradation tank; B. Aeration and sludge recirculation tank; and C. Secondary settling and effluent storage (before irrigation).

Advantages:

1. Practically no excess sludge.
2. High quality effluent (irrigation quality).
3. Low maintenance.
4. Under-ground installation (saves pumps - gravitational flow, saves area).
5. Modular system (easy to enlarge).
6. Transportable.

More technical details are given in Appendix 6 part A.

Case Study 5:

Best Practice No. 5.2: Educational Center for the subject of water conservation around a local wastewater treatment plant in a rural area - The Sakhnin model

1. **Goal and Objectives:** Teach school-children and adults the basics of water conservation principles. Demonstrate a simple, low energy demanding model of WW treatment plant that produce high quality effluent for agricultural and/or home gardening(HG) irrigation purposes, mainly in rural areas.

2. **Implementor:** The Sakhnin Water and Wastewater Technologies Demonstration Center, The Environmental Quality Unit-Agan Beit Netofa, The Galilee Society for Health and Environment-Regional R&D Center Related Ministries: Agriculture, Health, Environment and Education. and The Municipality of Sakhnin.

3. **Context:** Wastewater treatment in rural areas, effluent reuse for agricultural, gardening and landscape development purposes, water conservation in the Arab Sector in Israel.

4. **Target audience:** School-children, students, the professional community related to WW treatment and reclamation subjects, the general public especially farmers and owners of private home gardens.

5. **Description of Activities:** The Sakhnin Center for water and WW Technologies Demonstration (herein the Sakhnin Center) started operation on 1995. The activities are mainly educational and R&D. It has a strong scientific cooperation with the Technion, Israel Institute of Technology, Haifa and other academic and R&D institutions. The Sakhnin Center focuses around the local WWT plant were the center's laboratories, classrooms and R&D facilities are located. More details of the WWT plant and the activities of the Sakhnin Center are given in Appendix 6.
The Center's activities related to water conservation are as follows:

* Seminars and workshops for school children, teachers, students, technicians and engineers from Israel and abroad on wastewater treatment and reuse.
* Educational projects for high school children (ECOTOP/BIOTOP)
* R&D and monitoring activities on subjects related to WWT and reclamation.
* Public awareness activities: lectures, effluent acceptability review
* Monitoring of agricultural projects for reuse of the treated effluents (including follow-up of bacteriological parameters, emitters clogging, filtration, saving in fertilizers etc.)

In the last year over 1,000 visitors enjoyed the various activities of the Center. About 300 School-children made their final project in the Center.

6. **Gender Impact**: The population reviews done on acceptability of food products grown on reclaimed effluents take into consideration the gender impact. Women has special tasks in the household economy and their position in regard to the acceptability of crops irrigated with reclaimed water is important.

7. **Record of success in solving problems:** a. Preliminary public opinion reviews which were performed in several Arab villages indicated that the public will accept treated effluents reuse and the products grown on high-quality treated effluents. According to the preliminary findings religious, social or traditional reasons are not expected to limit the acceptability of reclaimed effluents.

8. **Relevance to the Region:**
About 7% of the total water consumed in Israel is treated in rural area wastewater treatment plants. The reclaimed effluents can be directly used for agriculture home gardening and landscape development. This is significant contribution to the national water balance.

9. **Explanation of how environmentally friendly:** Saves irrigation water, protect the environment from damages of wastewater.

10. **List of contacts**

1. The Environmental Quality Unit
   Towns Association for Environ. Quality
   Agan Beit Natufa.
   Sakhnin, Israel
   F+T: 972-6-6745247/8

2. The Galilee Society for Health Service and Environmental Protection
Shfaraam
T: 972-4-9861171/2
F: 972-4-986 1173
3. Technion, Israel Inst. of Technol.
Environ. & Water Res. Eng.
Technion City
Haifa, 32000 Israel
T: 972-4-8292630
F: 972-4-8327383

4. Discussion

Domestic Water Conservation (DWC) is an issue of prime importance in the Middle East, where water are scarce. About 30% of the national water balance is the expense for domestic for domestic purposes (640 MCMY out of 2,150 MCMY total balance). While the water expense for agriculture is gradually decreasing with time due to improved agro-technologies, domestic expenses are growing-up due to increase in population and the increase in standard of living and personal water use. In this perspective the importance of DWC to the national water balance becomes obvious.

The subject of DWC has a wide diversity. It relates to education and public awareness but also to legislative activities, water pricing policy, various technologies for water conservation in the house and in the home gardening, leakage prevention and wastage and more.

At several cases of drought years in Israel a significant reduction of over 10% in domestic water use was achieved due to a massive publicity campaign for water saving. Soon after the campaign stopped the water consumption level retuurned to the normal. The impact of education for DWC at school age is much more permanent. many types of devices are offered to the interested public for the purpose of DWC.

5. Conclusions and Recommendations

a. Massive publicity campaigns for DWC are effective but have only a short term impact.
b. Education programs for school-children is part of the routine activity of the responsible authorities and have a long term impact.
c. Many devices are available for DWC, both for "in-house" and for garden use. The public aaceptance of these devices depends upon awareness programs.
c. The use of dual volume toilet flushing cistern (DVFC) is one of the most efficient water saving devices in the context of DWC. Appartments equipped with this device may save 40 - 50% of the water bill by usung this drvice. Wide

application of this device is assumed to save about 16% of the domestic water used (70 MCMY, or 3.3% of the national water use).

d. By using various water-saving devices 5 to 40% of the water can be saved. The most common domestic water-saving devices are: The dual volume toilet flushing cistern (DVFC), the pressure regulated flow control devices (PR-FC) installed on shower heads and taps and apartment pressure regulators (APR).

e. In a long term test (12 years) it was found that that by using the PR-FC an average saving of 11.4% in domestic water use was achieved.

f. It was shown, in a long term test, that by installing the apartment pressure regulating device (APR) a water saving of about 22% could be achieved.

g. The use of Electronic operated automatic taps (ELOP) was shown to save about 80% ! of the water flow in each tap where it is installed. Since the water use for washing is around 30% of the domestic water use the potential saving due to installing ELOP taps is very significant. (Since the ELOP tap is operated without hand-touch, it's use has also an hygienic value).

h. Leak prevention devices, especially in desert areas, where the water is highly corrosive , may save large water quantities, in places where water is scarce and expensive. A project done in the City of Eilat had identified equipment for water metering in the apartments water supply that will be optimal in resisting leakage. The program in Eilat indicated reduction of water leakage from 40% before installation to 5% after installation.

i. A significant DWC can be achieved by using drip irrigation systems, and especially sub-soil systems as infrastructure for controlled irrigation systems. The drip irrigation by itself reduce water loss in the following ways:

* Reduce wind spray
* Reduce watering of pavements and shoulders
* Reduce evaporation.
* Bring the water selectively to the plants area.

j. By combining drip irrigation systems with irrigation control equipment e.g. soil moisture sensitive volume pre-adjusted, time pre-adjusted etc., further water saving may be achieved.

k. The use of automatic irrigation controllers may help in water saving by controlling the irrigation specifically at each part of the garden and by reacting to more than one control parameter.

l. In rural areas wastewater may be treated and reclaimed for home-garden irrigation purposes. Compact wastewater treatment facilities were developed for home (or cluster of homes) scale. These facilities not only save fresh water for irrigation but also give reasonable solution to the environmental problem of wastewater disposal in rural areas, located far from central sewage networks.

m. The Israeli experience proves that by a strict and detailed system of Water Laws a sigificant, long-run DWC can be achieved.

n. A progressive water pricing policy, which transfers the full price (without subsidy) of water to the customer is an efficient motivation for DWC. When the water norm is exceded by the customer, there is a dramatic rising in water price.

6. Reference

1. Eshet, M. "Water saving in toilet flushing facilities" (Hebrew). Report submitted to the ICWE.
2. Gynsburg, E. (199 1) "The impact of water saving devices on water conservation in the Israeli Police Stations" Annual Report (Hebrew) Submitted to the ICWE.
3. Gynsburg, E. (1992) "Follow-up of water saving devices in Ma'ale Efraim" Interim report (Hebrew) submitted to the ICWE.
4. Gynsburg, E. (1989) "The impact of pressure regulators on water conservation" Final Report (Hebrew) submitted to the ICWE.
5. Gynsburg, E. (1989) "Follow-up of water saving equipment in Mevaseret Zion" Annual Report (Hebrew) submitted to the ICWE.
6. Kahana,Y. and Avnon, M. (1995) "Water Conservation Measures in Israel." Report submitted to the ICWE and the IMWWA.
7. Kahana, Y. (199 1) "Water Conservation in Israel - General Background and means to Achieve Conservation" (Hebrew). Report submitted to the ICWRE.
8. Kahana, Y. (1990) "Conservation - The biggest resource left for fresh water" (Hebrew) Report submitted to the ICWE.
8. Kally, E. (1997) The Water in Israel - Resource in Shortage" (Hebrew), Published by the Water Research Inst. Technion, Israel. ISBN: 965-222-781-1.
9. Keidar, S. (1988) "Testing water conservation after installing apartment pressure regulators" Periodical Report (Hebrew) submitted to the ICWE.
10. Lazarovitch, S. (1980) "review on erosion damage and water leakage in the City of Eilat". Progress report (Hebrew) submitted to the ICWE.
11. Levertov, Y.,(1995) Short communication on "the financing of the ICWE" (Hebrew) in: Water & Irrigation 348 p.2, Oct. 1995
12. Raz, Z. (199 1) "Water conservation by the dual volume toilet flushing device" Plasson Publ. April, 199 1.
13. Shelef, G.,(1990), "The role of wastewater reuse in water resources management in Israel". Water Sci. & Technol. 23 (10-12), pp. 2081-1089.
14. Shelef, G., Kimchie, S.& Tarabeah, H. (1997), The Sakhnin Research, Demonstration and Training Project on: Wastewater treatment and reuse in small communities, Final Report to the USDA-EPA, May 1997.
15. Zilberstein, Y.and Zimchony, E. "Regulation and standards as a lever for domestic water conservation" (Hebrew). Report submitted to the ICWE.

Appendix 1:

Technical description of the Dual Volume Flushing Cistern (DVCF)

The attached figures give the basic technical details of the DVFC (Dual Volume Flushing Cistern).

CLASS-oN™

Dual Quantity Flushing Cistern

The **Class-oN** dual quantity W.C. flushing system offers modern styling with reliable performance. With over 30 years of experience in producing quality products and exporting them worldwide Plasson stands above the rest for mechanical excellence and distinctive design. Plasson's products have been awarded the International quality control ISO 9002.

Featuring the highest quality plastic material **Class-oN** dual quantity water saving mechanism is designed to deliver 4.5 litres of water to flush liquid wastes and 9 litres to flush solids. The quantities can be factory adjusted to deliver 3 litres and 6 litres accordingly.

Class-oN can be operated with a working pressure of up to 10 atm, the mechanism's sophisticated design ensures foolproof action, silent and rapid filling of the cistern. Day after day, year after year, **Class-oN** functions efficiently without leakage. Never a problem.

Class-oN adds brightness and warmth to your bathroom. With a rainbow of six popular colours to choose from, select from white, grey, pink, bahama biege, whisky and pearl.

Class-oN is simple to install. **Class-oN** comes in a variety of three versatile models offering placement directly on the basin or at two higher wall mounted levels (25 and 60 cm pipe length).

Plasson's **Class-oN** is truly a class above, enhancing the beauty and comfort of any bathroom.

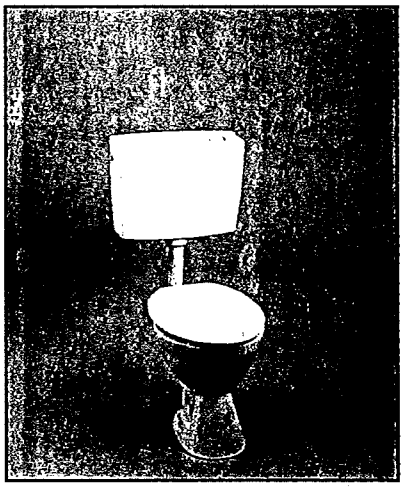

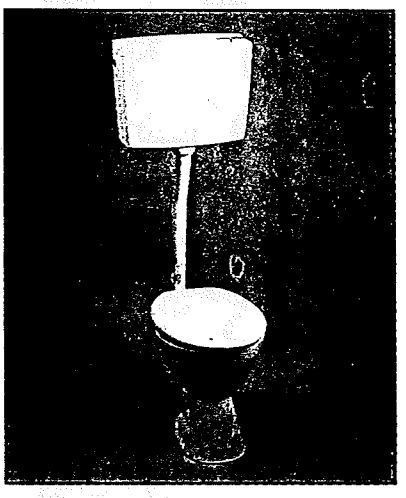

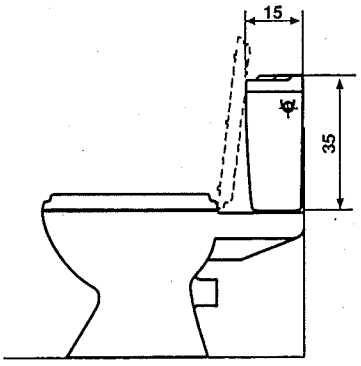

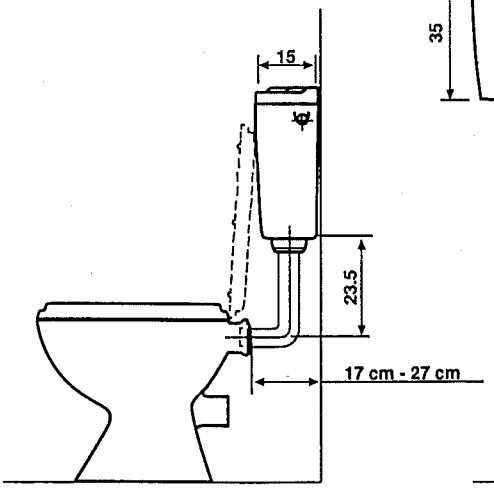

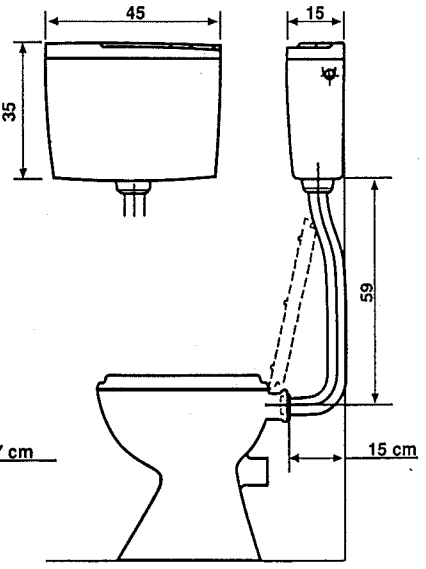

PLASSON Maagan Michael, D.N. Menashe 37805, Israel. Tel: 972-6-394711, Telex: 471465, Fax: 972-6-390887

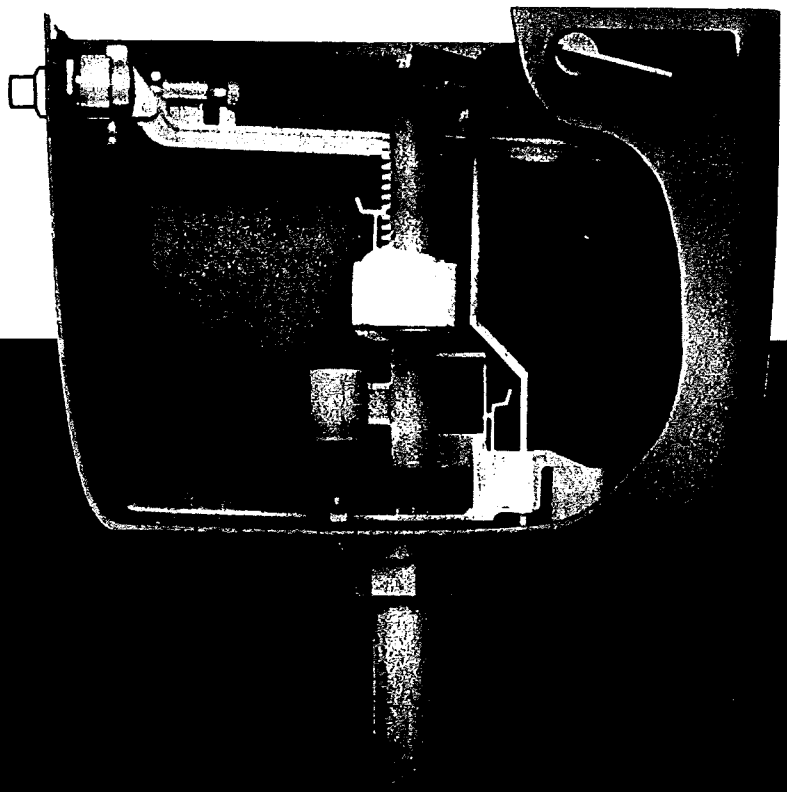

The dual quantity cistern has two operating levels, each of which flushes a fixed volume of water.

Basically, the mechanism is designed to deliver 4.5 litres of water to flush liquid wastes, and 9 litres to flush solids. The quantities can be factory adjusted to deliver 3 litres for liquids and 6 litres for solids.

The significant dimensions of Plasson's cistern are:
1/2" water inlet BSPP male.
The height from the floor to the top of the lid is 126 cm.
The water outlet is attached to a pipe 60 cm in length from the bottom of the tank to the inlet in the toilet bowl.

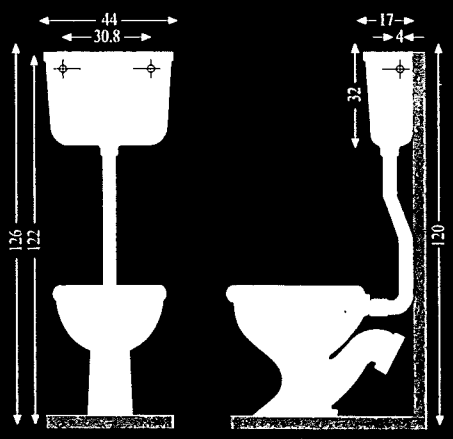

Complies with Israel Standard 851 for WC flushing cisterns.

PLASSON

Maagan Michael, D.N. Menashe 37805, Israel. Tel: 06-394711, Telex: 471465, Fax: 06-390887.

DUAL QUANTITY FLUSHING CISTERN

The mechanism design ensures foolproof action and eliminates leakage. Speedy and silent filling of cistern. All parts of wear-resistant material. Modern, streamlined shape - easy to clean. Simple installation - no welding or cementing. Dual lever actuated. Working pressure - up to 10 atm. Capacity 4.5 and 9 litres.

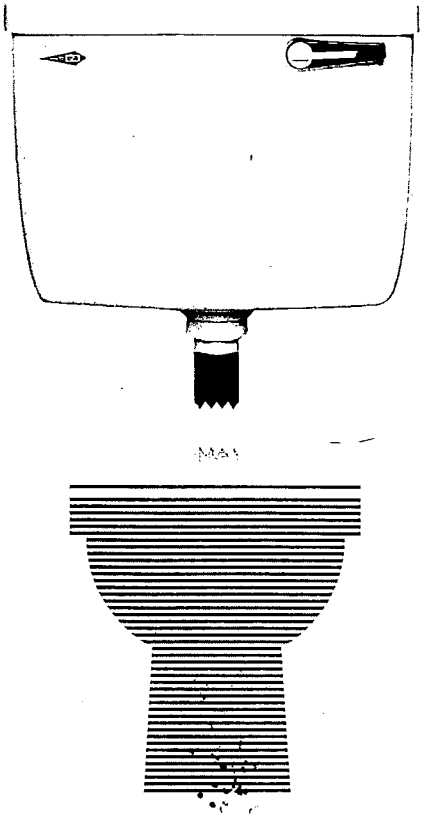

PLASSON

Appendix 2 :

Technical description of the Pressure Regulated-Flow Control Device (PR-FC)

Introduction:

The flow rate in taps and in shower heads increase as a function of opening degree and the water pipe pressure. When the water pressure is high, opening the valve causes a high flow rate of water, which is usually beyond the need and desire of the user. This unnoticed high flow rate causes much water wastage.

Technical description:

The Pressure Regulated - Flow Control Device (PR-FC) is a device which is installed in the pipe-line, immediately before every individual water consumer (tap or shower head) and is destined to keep a constant, pre-adjusted, water flow rate under changing hydraulic pressures.

The faucet is built of a metal or plastic casing, in the diameter of the pipe on which it is installed. Inside the faucet there is a rubber dome with several holes (see Fig. II-1).As the pressure on the dome increases, the effective diameter of the holes becomes smaller and thus the water flow through these holes is limited to a pre-set flow rate.

The advantages of the Pressure Regulated- Flow Control Device (PR-FC) are:

(a) It is a passive device. It does not require any external source of energy. It operates only when there is flow.

(b) It can be installed for individual water consumers (taps, shower heads).

(c) It drastically lowers the hydrostatic pressure.

(d) It is not sensitive to water hammer.

The main disadvantage is the possibility for clogging of the water holes. This should be treated by periodical dis-assembly and cleaning.

Experiments done for testing the regulating efficiency of the 2 GPM shower-heads flow regulators indicated that at an initial pressure of 1.5 atm. (15m. water head - see results in Fig. II-2) the flow-rate through the shower head was 450 lit/hr (2 gallons/min.). This flow-rate was maintained even when the pressure was elevated beyond 50 m. water head. A reference shower-head, without Pressure Regulated - Flow Control device (PR-FC), operated under the same experimental conditions, exhibited fast increase in the water flow-rate as the hydrostatic pressure increased (see results in Fig. II-2).

ווסת ספיקה - תרשים פעולה

Flow Regulator - Mechanism

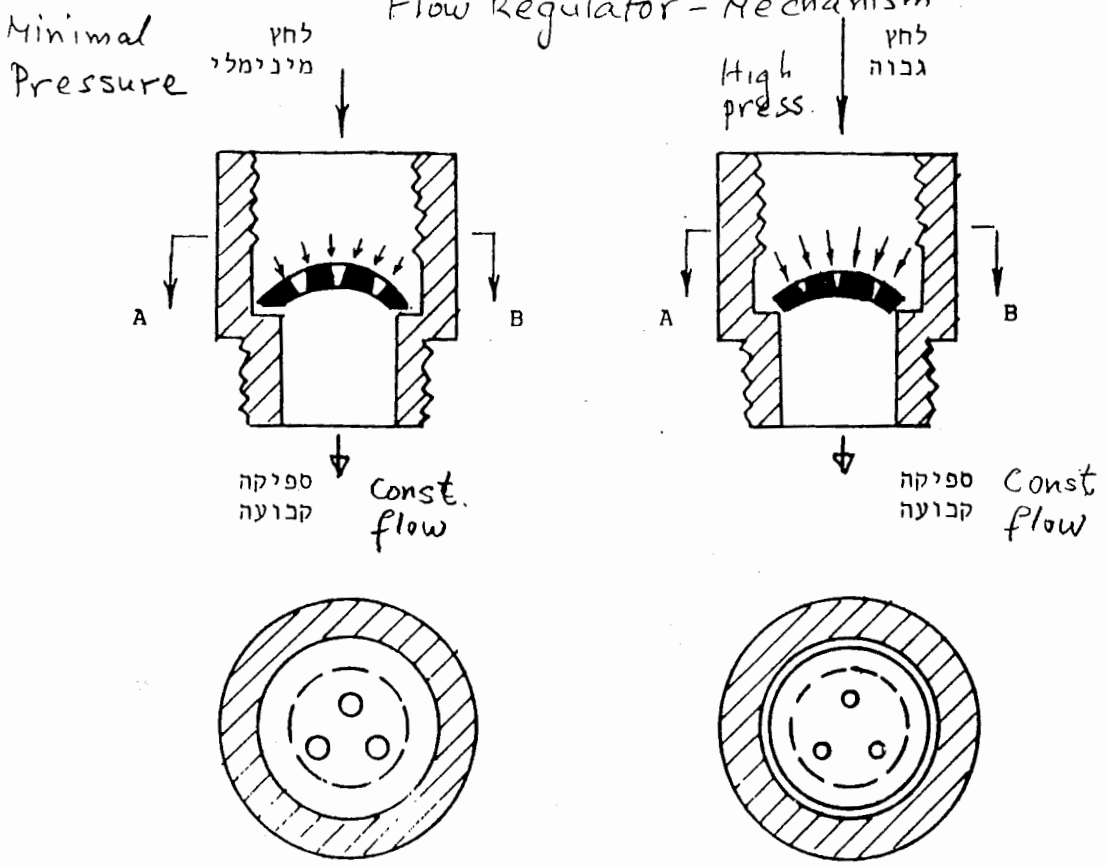

תרשים של רשת מים דירתית מווסתת

Apart. with Regulated waternet

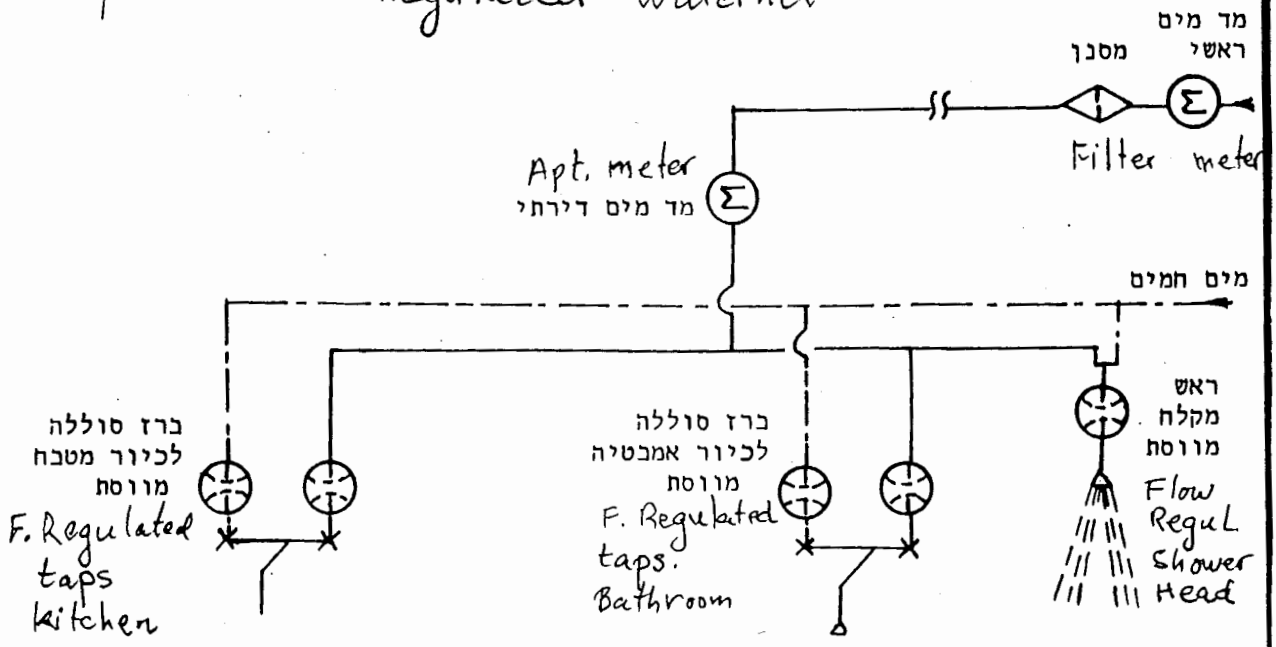

המרכז הישראלי לאבזרי מים (מיא"מ)	פר - 89 935
ווסת ספיקה - תרשים פעולה תרשים של רשת מים דירת"ת מווסתת	שרטוט 1
	אפריל 1989

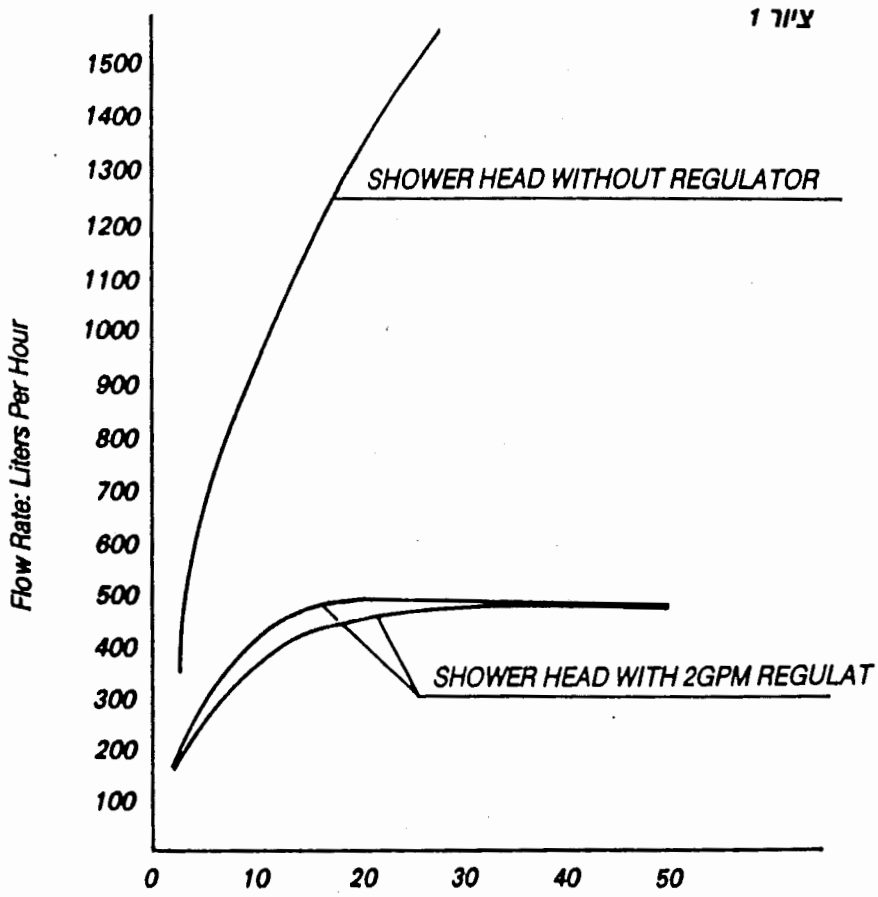

PRESSURE METERS HEAD OF WATER

ISRAEL CENTRE OF WATERWORKS APPLIANCES (ICWA)

Operating characteristic of shower head with and without Flow Regulator

Appendix 3-

Technical description of the Pressure Regulators for apartments main water supply pipes

The attached figures give the basic technical details of the APR (Apartment Pressure Regulators).

CONTROL VALVES BERMAD

PRV Series
DIRECT ACTING PRESSURE REDUCING VALVES
For irrigation, residential and industrial applications

The **BERMAD PRV Series** Direct Acting Pressure Reducing Valves have been specially designed for use where accurate and reliable control of line pressure is required, regardless of fluctuations in supply pressure and/or flow rate.

FEATURES

- The use of a rolling diaphragm provides:
  — Complete separation of the mechanism from the flow, resulting in long, trouble-free service.
  — Minimum friction resistance to mechanism movement, resulting in accurate performance.
- PRV regulators are available with a wide range of spring selection, for downstream pressure setting.
- PRV regulators are available in two models: adjustable and fixed downstream preset pressure.
- PRV regulators are also available in drip-tight models for static pressure conditions.

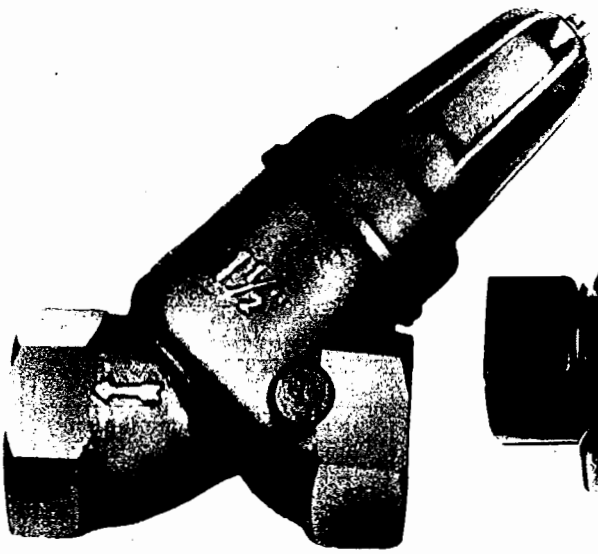

1 1/2"

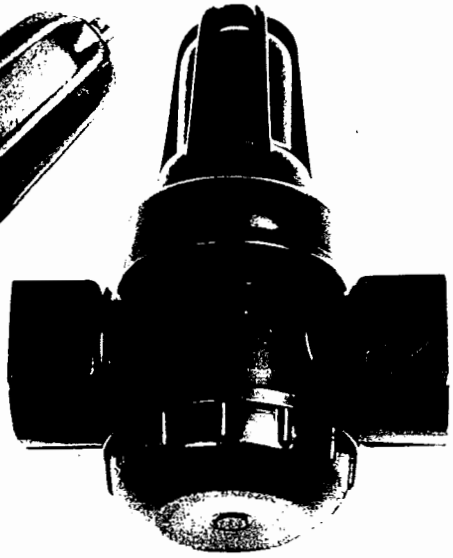

1"

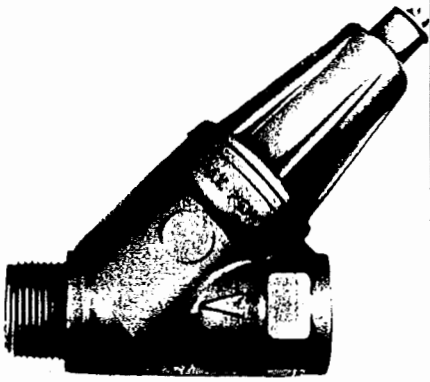

3/4"

Model 0075-PRV

Specifications

- **Size:** 3/4"
- **End connections:** female-female or male-female threading, NPT/BSPT
- **Flow Capacity Range:**
  Standard model: 0.2-5.0 m³/h
  Low flow model: 0.01-5.0 m³/h
- **Pressure Rating:**
  Min. working pressure:
  0.5 kg/cm² (7 psi)
  Max. working pressure:
  9 kg/cm² (130 psi)
- **Temperature Range:** water up to 80°C (180°F)
- **Materials:**
  Body: Plastic (also available in bronze)
  Actuator: Plastic
  Seals: Buna-N and NR
  Diaphragm: Nylon-fabric, reinforced Buna-N
  Spring: Stainless steel

Fall off Set Delivery Pressure on Short Supply Pressure at Different Flows

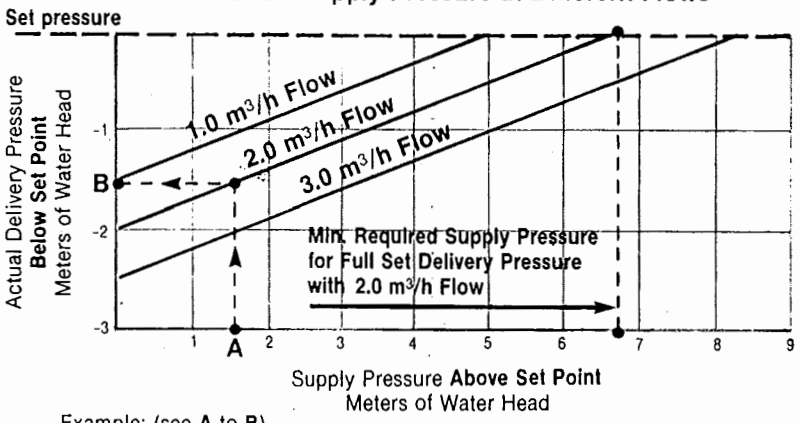

Example: (see **A** to **B**)
Set point of delivery pressure = 20 m
Flow rate = 2.0 m³/h
A If supply pressure is only 21.5 m **(1.5 m only above set point)**
B Then actual delivery pressure will fall to 18.5 m **(1.5 m below set point)**

PRV Operation Curve at a given flow

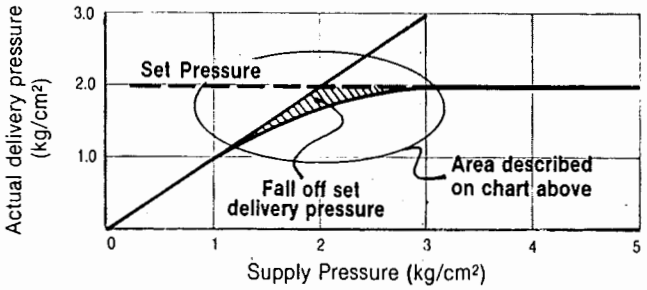

Dimensions and Weight

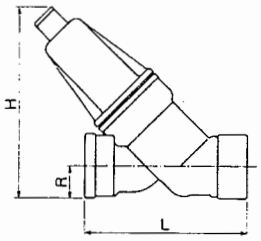

Size	3/4"
L (mm)	88
H (mm)	100
Width (mm)	45
R (mm)	17
Weight (kg)	0.11

BASIC VALVE ASSEMBLY

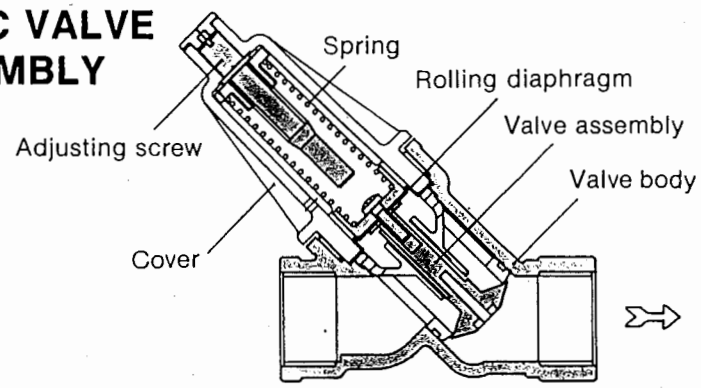

Spring Selection Diagram

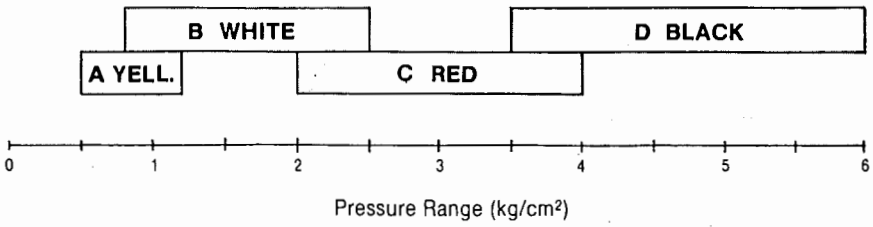

Spring	Pressure Range (kg/cm²) Min.	Max.
A	0.5	1.2
B	0.8	2.5
C	2.0	4.0
D	3.5	6.0

CONTROL VALVES BERMAD

Model 100-PRV

Specifications

- **Size:** 1"
- **End connections:** NPT/BSPT
  1" size: female-female threading
- **Flow Capacity Range:**
  0.45-8.0 m³/h
- **Pressure Rating:**
  Min. working pressure:
  0.15 kg/cm² (2 psi)
  Max. working pressure:
  9 kg/cm² (130 psi)
- **Temperature Range:** water up to 80°C (180°F)
- **Materials:**
  Body: Plastic
  Spring and shafts: Stainless steel
  Diaphragm: Nylon-fabric, reinforced Buna-N
  Seals: Buna-N and NR

Fall off Set Delivery Pressure on Short Supply Pressure at Different Flows

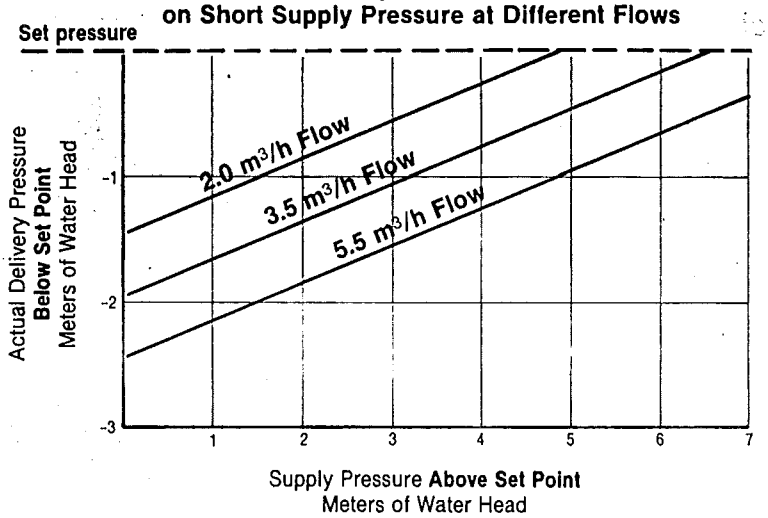

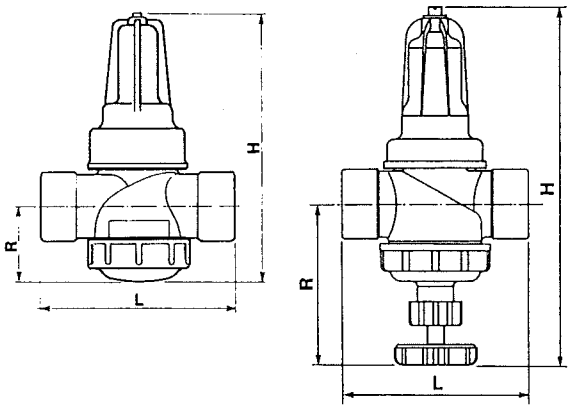

With Mechanical Closer

Dimensions and Weights

Size	1"	1"
L (mm)	114	114
H (mm)	160	200
Width (mm)	65	65
R (mm)	45	95
Weight (kg)	0.55	0.70

Spring Selection Diagram

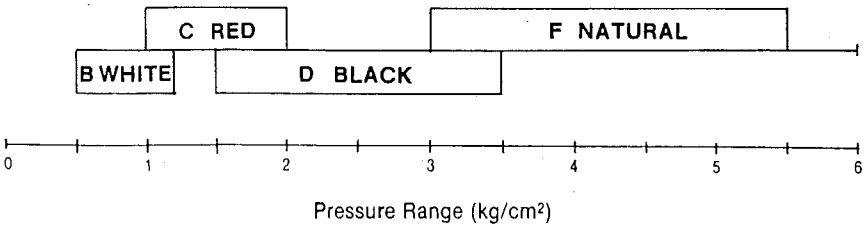

	Pressure Range (kg/cm²)	
Spring	Min.	Max.
B	0.5	1.2
C	1.0	2.0
D	1.5	3.5
F	3.0	5.5

Appendix 4:

Technical description of the Electronic Operated (ELOP) taps

The attached figures give the basic technical details of the ELOP (Electronic Operated) taps.

Aqua Touch

Smart Spout

Hands-free, battery-powered, automatic faucet.

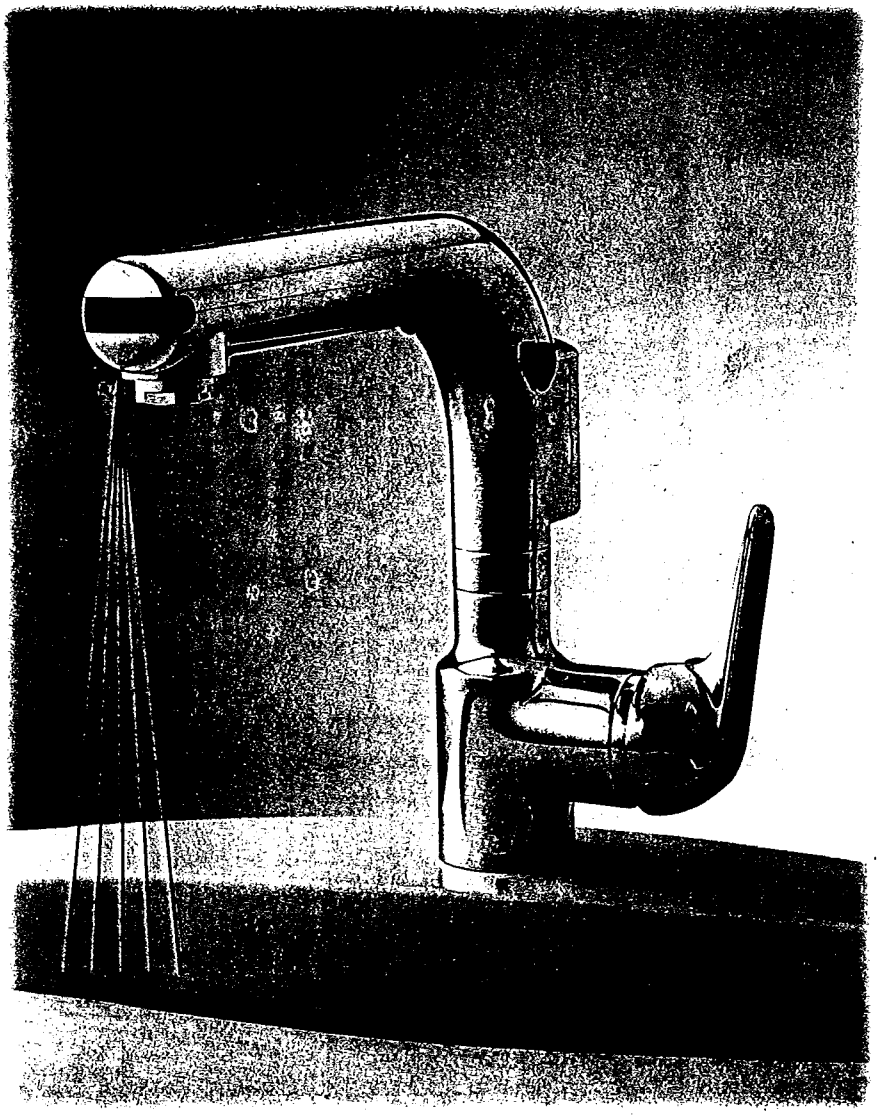

To activate the Smart Spout simply hold your hand

beneath the infra-red sensor and water

immediately starts to flow.

Remove your hand and the water flow automatically stops.

Aqua Touch

The Standards Institution of Israel
SI
ISO 9002
Quality Assured Firm

Easy installation. No electrical connection needed.
Secured against accidental operation by a safety shut-off device.

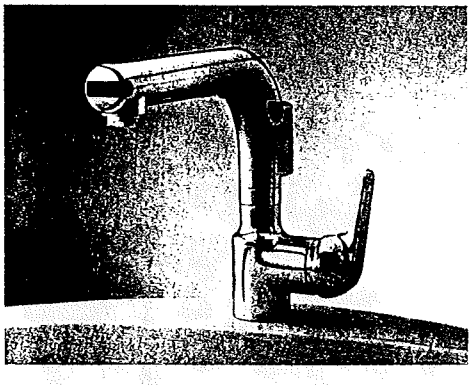

Model 3408

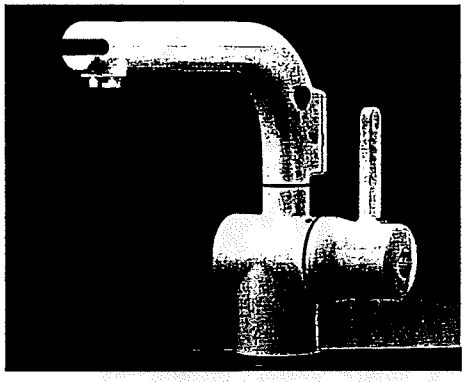

Model 3708

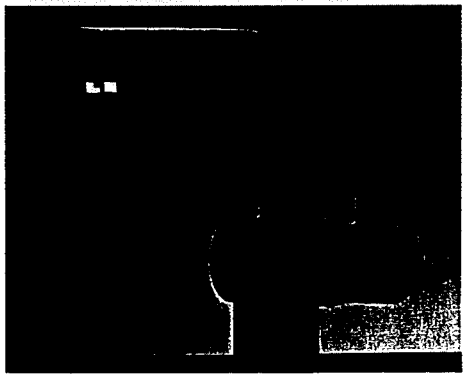

Model 3708

FEATURES AND BENEFITS:

- *Up to 80% water saving*
- *Hygienic protection*
- *Easy Installation*
- *No electrical network needed*
- *Built-in switch for manual operation*

THE SMART SPOUT FAUCET IS SUITABLE FOR:

- *Kitchens & bathrooms*
- *Medical rooms & hospitals*
- *Laboratories*
- *Facilities for disabled persons*

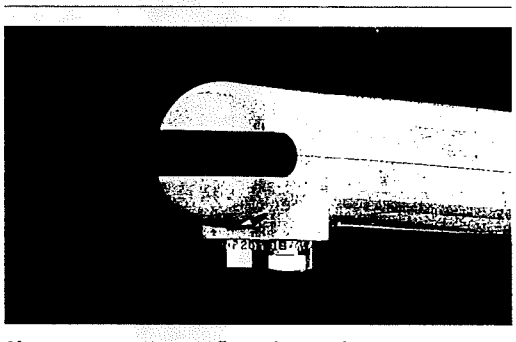

If you want continuous flow of water for any purpose, all you have to do is put your hand in front of the narrow window on the spout for a second and water will flow continuously. To deactivate the same action must be repeated.
Continuous Flow is automatically deactivated after 90 seconds.

Operated by 9V battery with expected life of up to one year

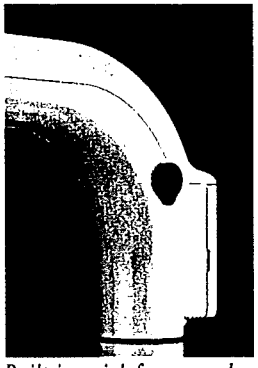

Built-in swich for manual operation

IMAGINE ... A FAUCET THAT UNDERSTANDS YOUR HANDS!

ADDRESS: MADGAL GLIL-YAM, KIBBUTZ GLIL-YAM 46905 ISRAEL. TEL: 972-9-9528964 FAX: 972-9-9528983

Aqua Touch

AUTO FLOW

Hands-free operation, battery-powered, automatic faucet.

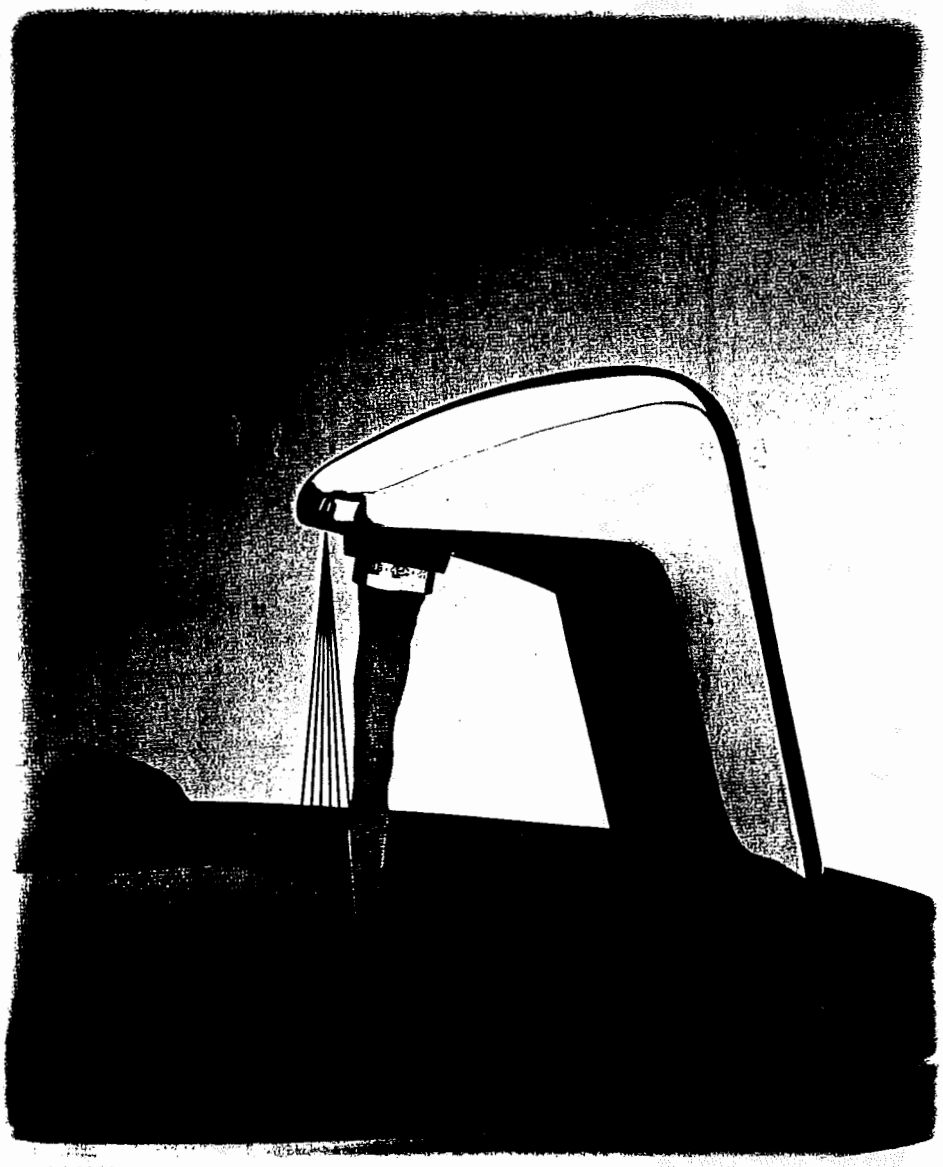

model 3980

To activate the AUTO FLOW simply hold your hands beneath the infra-red sensor and the water immediately starts to flow. Remove your hands and the water flow automatically stops.

AUTO FLOW is specially designed for use in public places and it is a heavy duty, full metal, chrome plated or colored brass construction for dependability.

AUTO FLOW

AUTO FLOW is designed especially for easy installation for premixed cold or hot &cold water. There are three power source connection possibilities: an electric adaptor, a regular 9V battery (with expected life of up to one year) or a 6 X 1.5V AA-size alkaline battery in a pack (with exp. life up to 5 years).

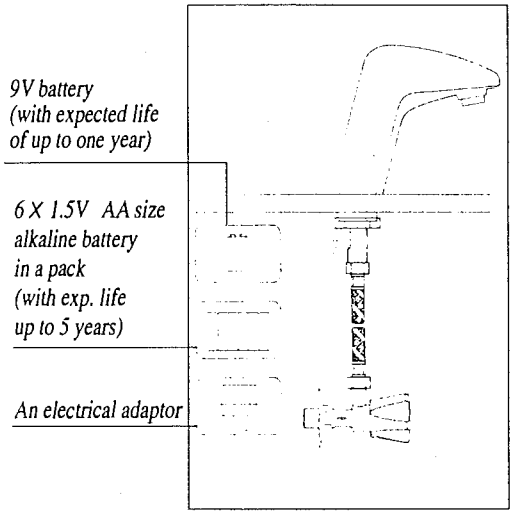

Model 3980 - Cold water connection

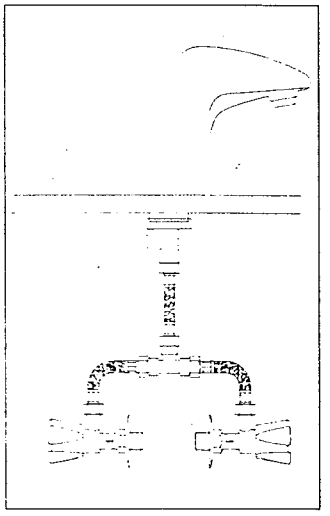

Model 3980 - Premixed water connection (Back flow prevented)

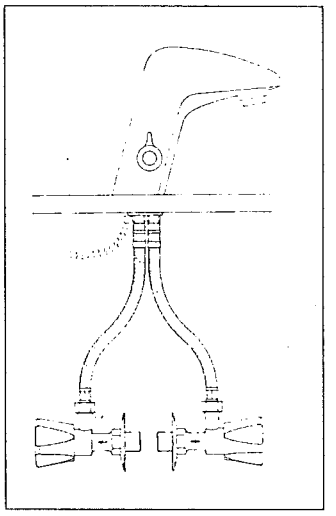

Model 3280 - Hot & Cold water conection (back flow prevented)

FEATURES AND BENEFITS

- *Up to 80% water savings*
- *Hygienic protection*
- *As easy to install as a regular faucet*
- *No electrical network needed*
- *Battery pack mounted under the sink makes it vandal-proof*
- *Specially designed for thorough and easy cleaning*

THE AUTO FLOW FAUCET IS SUITABLE FOR:

- *Medical facilities*
- *Facilities for the handicapped*
- *Public buildings and restaurants*
- *Cinemas and schools*
- *Airports*
- *Gas stations*

TECHNICAL DATA

Pressure Range-0.5 10 bar

max. flow rate-3980-12 Lit/min-3 bar

3280-10 Lit/min-3 bar

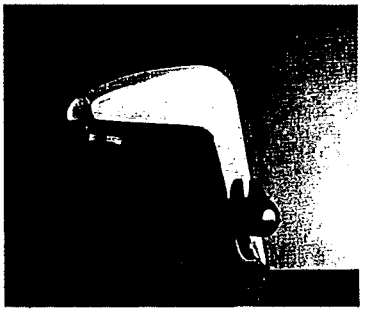

Model 3280- automatic mixer, with temp. controler.

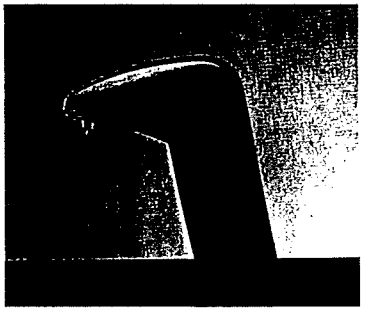

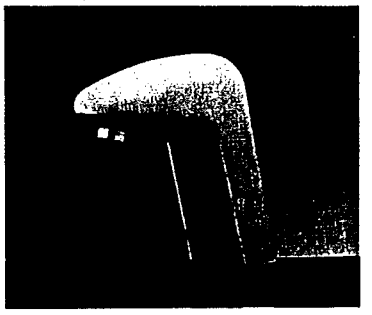

Model 3980- automatic mixer for cold or premixed water.

AUTO FLOW, TAPPING INTO THE FUTURE

ADDRESS: AQUA TOUCH, MADGAL GIL, YAM KIBBUTZ GIL, YAM 46905 ISRAEL TEL: 972-0-528 061 FAX:972-0-528 083

Appendix 5:

Technical description of irrigation control valves

The attached figures give the basic technical details and features of several types of irrigation control valves.

Electric Hydraulic Valve

DC model 12V latch
AC model 24 VAC
AC model inrush 150 mA holding 0.1-0.2 mA at all pressure ranges.
DC valve can run 4 years with 9 volt alkaline battery operating daily.

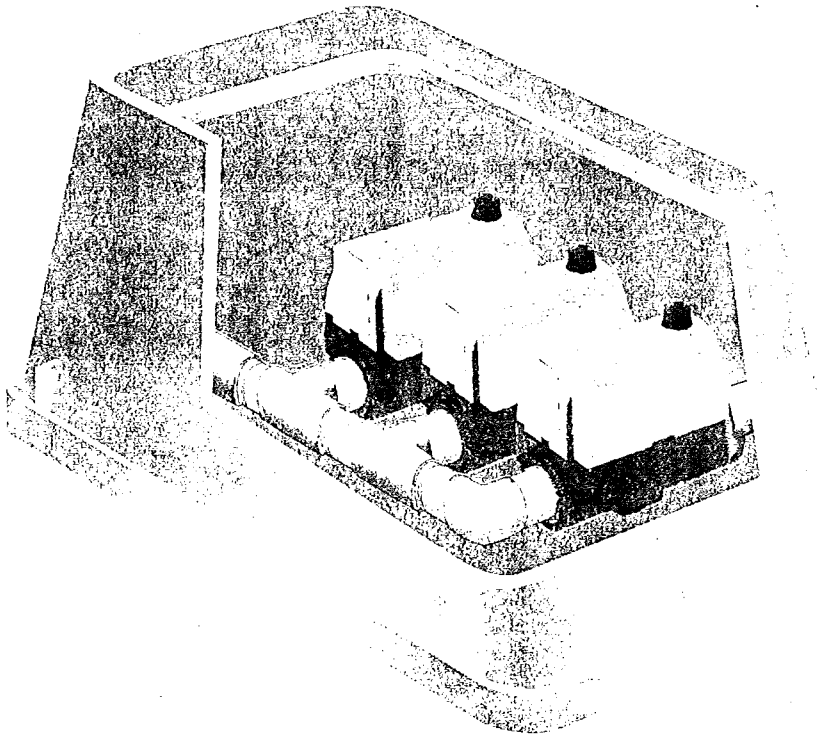

Long run with low wire gauge for all pressure ranges:					
AWG	24VAC mm²	L (m)	AWG	12VDC mm²	L (m)
18	1.0	915	12	4.0	960
20	0.5	550	14	2.0	600
22	0.5	335	16	1.5	380
24	0.5	215	18	1.0	240
26	0.5	140	20	0.5	150

CR ("Total Clogging Resistance")

3 [illegible] control water with internal bleed no flow of control water during operation.

A [illegible] flow to the command chamber is less than a teaspoon pass - 2.0 mm orifice.

"You can't plug this valve."

n-Off manual and electric feature

At all operation ranges, flow from 25 l/h to 8m³/h, pressure 2 m to 100 m (10 bar).

Fits all designs. All jobs - drippers or big sprinklers operates from very low to very high flow and pressure.

Manual flow control

nique design

Reinforced body - only 4 stainless steel bolts in the body cover.

Colored top cover.

Strong body with one part and 4 bolts for fast reassembly.

izes

3 [illegible] basic models with or

Head Loss

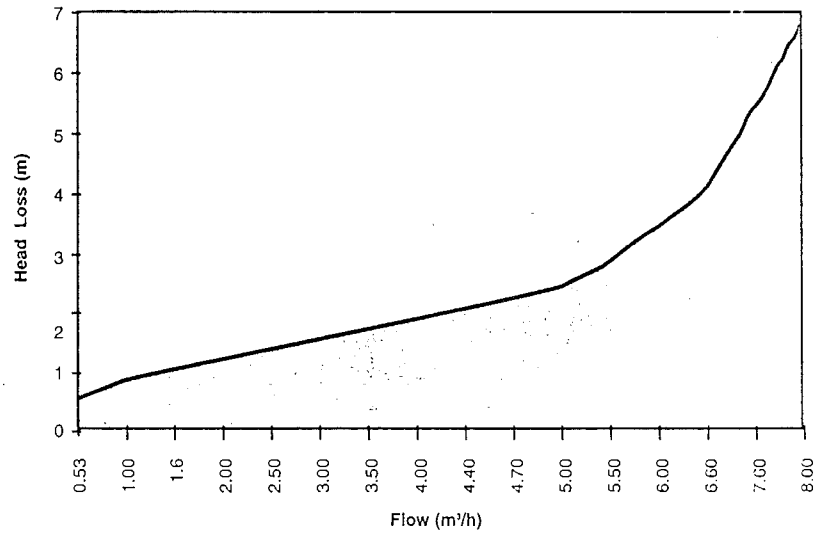

NETAFIM Australia

HEADOFFICE:
45-55 Epsom Road, Rosebery, Sydney, N.S.W. 2018
☎ (02) 662 8000
Fax (02) 662 7054
Fax for orders: (02) 662 7073

ADELAIDE S.A **BUNDABERG, QLD.** **MELBOURNE** **MILDURA, VIC.** **PERTH, W.A.,** **TOWNSVILLE, QLD.** **RENMARK**

Appendix 6:

Part A: Technical description of the Home-Scale Compact Wastewater Treatment Facilities (HS-CWWTF)

Part B: Details about the educational program in the Sakhnin Center

See attached leaflets.

E.P.C. LTD.
RECYCLING & COATING TECHNOLOGIES

Sewage Treatment Plant Without Excess Sludge

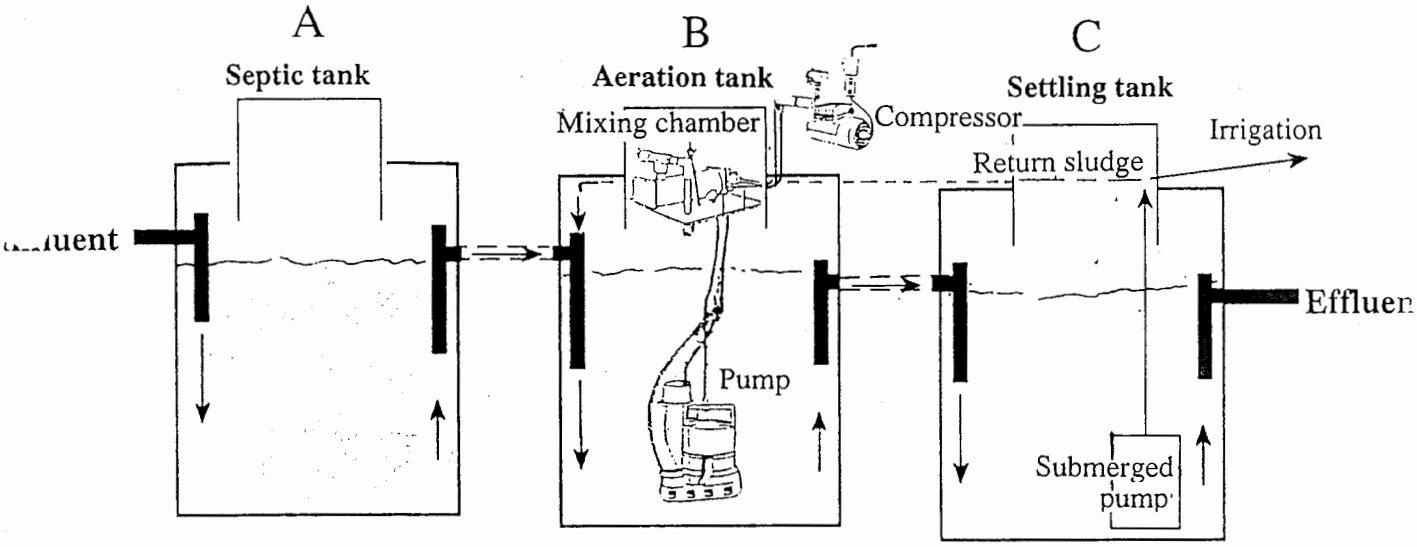

E.P.C. LTD. P.O.BOX 8564 SHA'AR-HEFER 42920 ISRAEL TEL: 972-9-8826464 FAX: 972- 8612646

BIO-ROBI TREATMENT PLANT

A Plant Without Excess Sludge

Background

Many alternative onsite wastewater management options are used in small scale water purification processes. The most common system consists of a septic tank and of either a subsurface soil disposal field, or seepage bed, or leaching fields, for final treatment and disposal of the septic tank effluent.

In the septic tank, full decomposition of organic contaminants is not achieved. Partially treated septic effluent is of low quality and highly contaminated by organic matter. It results in clogging of distribution piping network and reduction of infiltrative capacity of the disposal field. Finally, it may cause a failure of the whole onsite system. Septic tank effluent may also cause pollution of underlying groundwater that serve or potentially could serve as a drinking water supply.

Bio-Robi Solution:

Bio-Robi Plant proposes a new solution based on supplementing of the anaerobic treatment with extended aeration process.

Objective

The sewage treatment plant is designed for purification of sanitary wastewater. The plant produces effluent with BOD_5 of 20 mg/l and suspended solids of 15-20 mg/l in accordance with the criteria of Health and Environmental requirements of developed countries.

Advantages

- produces highly treated effluent;
- compact installation;
- expansion easily accomplished;
- no chemical additives;
- no excess sludge
- no buffer zone;
- no odor problems;
- no noise;
- no maintenance required;
- no public health risk.
- fully automatic;
- allows to use the purified water for irrigation;

Applications:

- individual residences;
- clusters of homes;
- small communities;
- automobile service stations;
- picnic parks;
- motels;
- campgrounds;
- any settlements without municipal sewage system.

How Bio-Robi Plant Operates

Bio-Robi system is designed for flow rate ranging 2 to 100 m^3/day. The system incorporates three tanks and process equipment:

- Septic tank (A)
- Aeration tank (B)
- Secondary settling tank (C)
- Two submerged pumps
- Mixing chamber
- Compressor
- Control panel and warning system

Septic tank (A) that serves as a combined settling and skimming tank, serves also as an equalization tank. Because shock loading is eliminated or can be minimized, biological treatment is enhanced, the effluent quality and thickening performance of secondary sedimentation tank is improved through constant solids loading. The degree of clarification in the primary tank achieves more than 50% of suspended solids and of BOD_5. To exclude the odor problem, the pipe from the septic tank is connected to the aeration tank where highly concentrated oxygen and aerobic microorganisms are present. The complete extended aeration process occurs in the aeration tank (B).

The extended aeration process provides:

- excellent effluent quality
- relatively low sludge yield
- relative simplicity
- relative ease of operation

High level of oxygen supply (5-7 mg/l), presence of aerobic bacteria, and long aeration time (to 18 hours) result in almost complete decomposition of organic contaminants in the aeration tank.

Air supply is provided by a compressor mounted next to the control panel. The pumping system recirculates the liquid in the aeration tank. The submerged pump lifts water to the patented mixing chamber where the water is mixed with oxygen, and

injects it underwater where both high velocity and propeller action create turbulence and diffuse the air bubbles.
The disposal of sludge and concentrated contaminants, has been and continues to be one of the most hard and expensive problems for all treatment plants. With Bio-Robi plant, an extended aeration activated-sludge process is used. The quantity of excess sludge for this type of active-sludge process is far less than with any other known process. The disposal of excess sludge for the small capacity plants is carried out once in one to five years.

The function of the settling tank (C) is to separate the activated sludge solids from the mixed liquor. Return sludge is pumped from tank C to tank B once in few hours. The wastewater effluent quality from tank C is very high. The contaminants concentration are less than 20 mg/l BOD_5 and 30 mg/l Suspended Solids.

Instead of fresh water used in large quantities at present, highly treated wastewater effluent may be used for irrigation of public parks and residential lawns. The irrigation of landscaped areas in urban environment may become an important use of reclaimed wastewater.

Bio-Robi Plant solves the wastewater treatment problem locally at very high level from the sanitary, public health and environmental points of view.

Since four years the experimental systems are under operation, so far there was no need for removal of excess sludge in most of them.

Similar systems are operating in the U.S.A., Canada, and South America for more than 20 years without special maintenance or system failures.

In order to increase the efficiency of the system and to render excessive purification, special bacteria cultures which have been developed for this process, can be added. They are called LLMO and can be obtained in one liter containers. The dosage to be used depends on biological loading of sewage to be treated.

" BIO - ROBI "

Typical treatment flow diagram

KEY

A-ANAEROBIC TANK
B-AERATION TANK
C-SETTLING TANK
D-IRRIGATION TANK
P-SUBMERSIBLE PUMP
C1-DIAROBI COMMINUTOR
C2-COMPRESSOR
-ACTIVATED SLUDGE (STARVED MICROORGANISMS)
P^2-SLUDGE RETURN PUMP
P^3-IRRIGATION PUMP
CL-CHLORINATION
DCL-DECHLORINATION
S-STRAINER

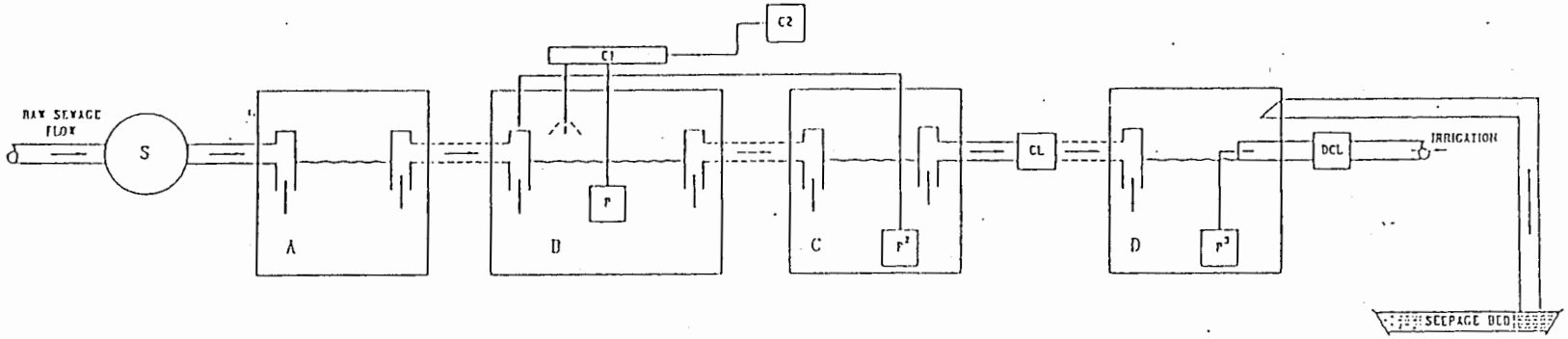

INFLUENT

25 m^3/day
5 m^3/day PEAK
BOD_5 400 ppm
TSS_{105} 400 ppm

EFFLUENT

25 m^3/day
BOD_5 15 ppm max.
TSS_{105} 15 ppm max.
COLIFORM 22 MPN PER 100 ml max.

FOR COMMENTS

כין רובי - טיהור שפכים ללא כנעה
תאור תהליך.

NOT TO SCALE

DWG.1

Appendix 6 part B: Technical Description of the Sakhnin Research, Demonstration and Training Project on Wastewater Treatment and Reuse for Small Communities'

By:

Prof. G. Shelef, Dr. S. Kimchie and M.Sc. H. Tarabeah

Table of Contents

1. Introduction
    1.1 General
    1.2 Scietific and technological background
    1.3 General and specific objectives
2. Methodology
    2.1 Wastewater treatment plant monitoring program
    2.2 Agricutural experiments program
    2.3 Technologies dissemination program
3. Results and discussion
    3.1 Results of the WWTP monitoring program
    3.2 Agricultural Experiments
        3.2.1 Results of agricultural experiments
        3.2.2 Future agriculture experiments
    3.3 Results of the technologies dissemination program
4. Continuous and future programs
5. Conclusions

The project is financed partially by U.S. Department of Agriculture (USDA) and the EPA, with the cooperation of the Sakhnin Municipality

Sakhnin, Israel May, 1997

1. Introduction

1.1 General

The Sakhnin Center (Sakhnin Center for Research, Demonstration and Training on Wastewater Treatment, Agricultural and Energy Conservation Technologies) is operating for about 2 years. The center's activities are based upon the operation of the local wastewater treatment plant (WWTP) serving a population of about 10,000 persons. The Center's facilities are located in vicinity to the WWTP and include: Analytical and educational laboratory, effluent treatment system (filtration & disinfection), effluent reuse system (irrigation and drip irrigation facilities, experimental lots) and a training team which is connected with local elementary and high-schools on the one hand and with the Technion and the R & D Center of the Galilee Society on the other hand.

The Sakhnin Center is conducting a monitoring program for the WWTP and for the effluent quality as well as training and educational activities for classes, students and visitors. Beside wastewater treatment and reuse the center also deals with solid waste and agricultural waste treatment, compostation and energy conservation. Connected to the present project we are currently operating 2 wetland model units and 1 slow sand filtration unit for the demonstration and training these technologies. We are also operating a compostation unit for the treatment of the excess sludges removed from the anaerobic ponds combined with agricultural residues. The facilities described above serve as an educational and demonstration infrastructure for a wide range of dissemination activities for the following target populations:

- School children from 1st grade to the 12th grade.
- Students from colleges in the area that prepare their final project on environmental subjects.
- Farmers from the villages of the area (Town's Association).
- Technicians and engineers from the municipalities from Israel and abroad.

1.2 Scientific and Technological Background

In small communities the quality of the effluents from wastewater treatment plants (WWTP) is limited by the low feasibility of investment in construction of small scale WWT facilities and in their operation. Using the treated effluents for irrigation purposes adds an economical driving force for investments in WWT. Another economic advantage of choosing agricultural irrigation as a final disposal solution for the treated effluents is that it permits low quality demands, especially in regard to nutrients removal. Final

disposal by irrigation is usually combined with non-compromising hygienic demands. Controlled utilization of the treated effluents reduces the environmental risks of polluting lakes, rivers and/or other land and water resources which might be caused by other alternatives of effluents disposal.

In the municipal area of the City of Sakhnin a WWTP was designed and operated in the last few years, combining the principles of saving in investment and operating costs with achieving the required standards for agricultural irrigation. The WWTP includes a series of ponds in which physico-chemical and biological removal processes are responsible for high removal efficiency. An average daily flow of about 1,000 m^3/d is entering 2 parallel anaerobic sedimentation ponds. After the primary sedimentation and biological degradation the effluents are flowing into a facultative pond from which the effluent is flowing into a seasonal reservoir (SR). The retention time of the effluent in the SR is fluctuating in a wide range according to the season. These fluctuations (from about 5 months down to about 1 month) have significant effect on the effluent's quality. The SR effluents are filtered and chlorinated before being used for irrigation.

It is planned to use the plant's effluent for non-restricted irrigation. This requires high quality standards and especially high bacteriological and virological standards. The systems which are being currently added to the existing facilities e.g. chlorination and sand filtration will add a significant improvement of hygienic quality to the effluents. The whole project is coupled with an intensive quality monitoring program for the influents and effluents of the system. Additional quality improvement of the effluent is expected as a result of operating the biological polishing units: (a) The constructed wetland (CWL) and (b) the Slow Sand filter (SSF).

The agricultural program includes two main issues: 1) The effect of treated effluent on emitters clogging. This issue is of prime importance for the farmers who intend to reuse treated wastewater for drip irrigation. A monitoring project on this subject was started on May 1997 and will last until October 1997. This project is executed by students from a local high-school and college, who are preparing their final environmental projects (ECOTOP/BIOTOP) on this subject; 2) The effect of irrigation with WWTP effluents on crops quality and quantity compared to crops irrigated with virgin water. This project was started at the beginning of the irrigation season, in cooperation with the R&D Center of the Galilee Association for Research and Health Services and with the participation of the Ministry of Agriculture and the Volcani Institute for Agricultural Research.

The technologies dissemination program is also important since the cooperation with the population will determine whether treated wastewater effluents will be accepted or rejected by the community. It is important to demonstrate to the public that effluent reuse is both economical and safe.

1.3 General and Specific Objectives

To investigate, operate and demonstrate the efficiency of a simple wastewater treatment technology, with low energy and low maintenance demands, to produce proper effluent quality for non-restricted use in irrigation.

Specific Objectives:

a. Monitor the various quality parameters of the system during various seasons and under various operating conditions.
b. Design, operate and demonstrate innovative technologies that will increase the efficiency of the system.
c. Conduct a dissemination program to promote the acceptability of the reused effluents by the professional community and by the general population.
d. Test agricultural aspects of using wastewater treatment effluents e.g. occurrence of drips clogging, influence on crops quality and quantity, microbiological aspects and saving in chemical fertilizers.

2. Methodology

2.1 Wastewater treatment plant monitoring program

The wastewater treatment plant (WWTP) consists a series of ponds including: 2 parallel anaerobic sedimentation ponds (1,250 m^2 area, 5,000 m^3 volume, each). Following the primary sedimentation ponds the effluents are flowing into a facultative pond (1,700 m^2 area, 5,200 m^3 volume) from which the effluent is flowing into a 150,000 m^3 volume, 6 m deep seasonal reservoir (SR). Filtration and chlorination units for final treatment of the effluents are currently under construction. The system and sampling points are schematically presented in Figure 1.

The sewage average daily flow is about 1,000 m^3/d. Since the actual water volume in the SR has wide seasonal fluctuations, according to the irrigation regime, the effluent's retention time in the SR is also fluctuating in a wide range. The hydraulic retention time values in the SR fluctuates between values of about 5 months in the winter, down to about

1 month in the summer. The calculated organic loading of the system is about 500 kg BOD_t/d.

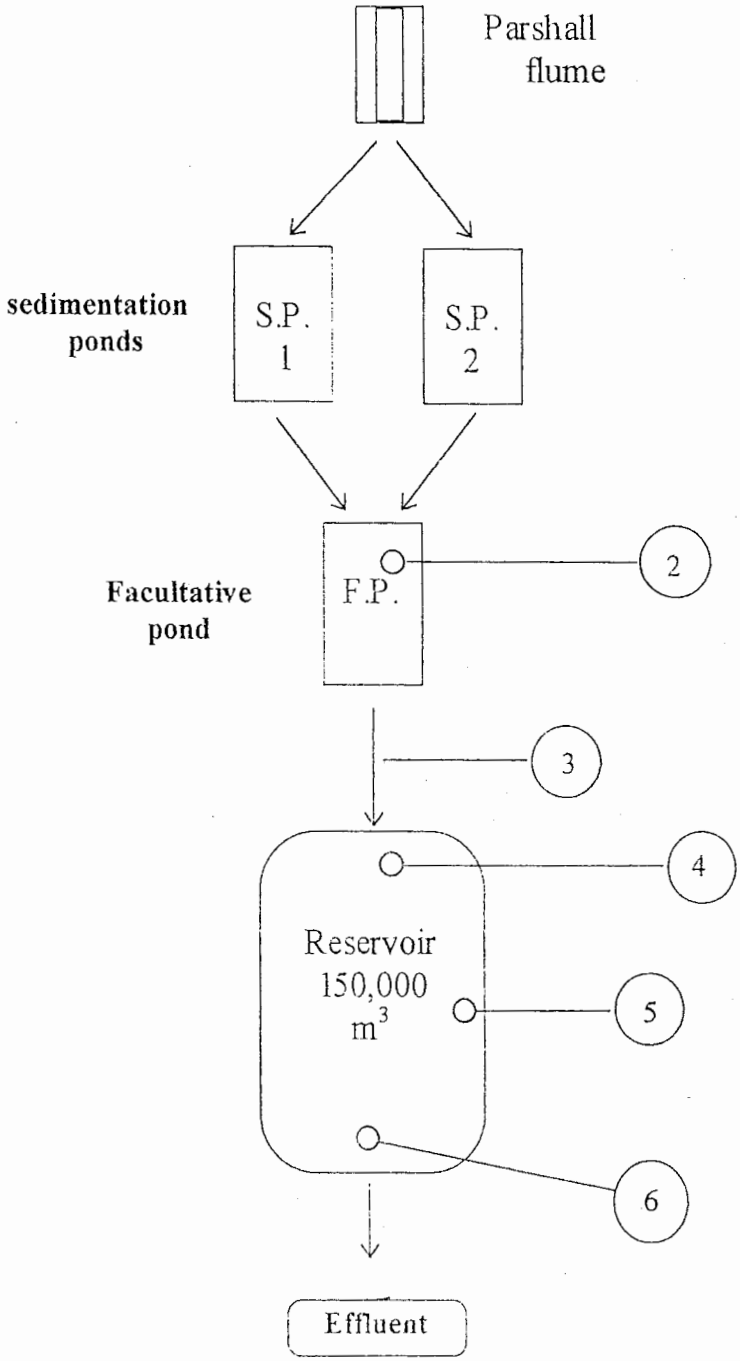

Figure 1: Schematic presentation of the system and sampling point

Sampling and analysis

Samples from the WWTP were collected at seven points along the system (according to the numbers in Figure 1). Sampling point 1 is at the entrance of raw sewage into the system - at the Parshall flume. Sampling point 2 is at the outlet of the anaerobic sedimentation ponds (entrance to the facultative pond). Sampling point 3 is at the outlet of the facultative pond. Sampling points 4, 5, and 6 are along the bank of the SR, in the direction of flow and sampling point 7 is at the outlet of the SR, by the discharge pipe. Samples from the SR were taken 2.5 meters away from the bank and 0.7 m below the water surface, using a sampler with a long handle.

The samples were transferred in a cold container to the analytical laboratory, were all the analytical work was done according to the "Standard Methods for the Examination of Water and Wastewater" (WPCF-AWWA-APHA), 18th Edition. The following parameters were monitored: BOD, COD and Solids (total and soluble), NH_3, $NO_{3/2}$, pH, EC, Cl^-, P, Fe, B, turbidity, Coliform counts (total and fecal) and fecal Streptococci.

2.2 Agricultural experiments program

Irrigation system of 25 hectares of agricultural area was equipped with different kinds of emitters. Most of the area is irrigated by surface area drip irrigation system. Small experimental lots will be devoted for experiments with other types of irrigation systems e.g. subsoil drip irrigation, and other types of surface emitters. Most of the area is planted with old olive trees. Some of the experimental lots were planted with young olives and with other fruit trees planted at various densities.

The experiments will include measuring development rates of the young trees, weight of crop according to size and to other quality parameters that will be defined by the farmers. Various levels of fertilization and watering will be compared according to the corresponding levels of plants development and various quantities of crops produced.

The actual research and demonstration work started on May 1997 with the cooperation among several bodies:

(a) The Galilee Association for Research and Health Services.

(b) Volcani Institute for Agricultural Research, The Israeli Ministry of Agriculture.

(c) Towns Association for Environmental Quality, Agan Beit-Natufa.

(d) The Municipality of Sakhnin.

The first stage is executed on an area of 13 acres and the research program includes the following parameters:

(a) Different olive strains

(b) Different ages of trees.

(c) Different quantities of irrigation water.

(d) Different levels of fertilizers.

(e) Two types and qualities of irrigation water: treated effluents and virgin water.

(f) Other types of fruit trees, different from olive trees.

The following parameters will be quantified:

(a) The oil quantity and quality according to tests of oil samples.

(b) The influence of irrigation on the plants development.

(c) The influence of irrigation on soil salinity and SAR.

(d) The influence of irrigation on the frequency of plant diseases.

(e) Drip clogging frequency as a function of effluent quality (suspended solids, etc.)

Part of the analyses will be performed in a field laboratory that was recently established and equipped near the WWTP.

2.3 Technologies dissemination program

Various educational activities and training programs are in operation now. Specific details about the various programs will be given in Chapter 3.3. The infrastructure for the execution of educational and other dissemination activities has been established by the Regional Center for Environmental Technologies and Energy Conservation (The "Center"). This infrastructure includes: Laboratories, including analytical instrumentation; classrooms and audio-visual facilities; library; meteorological station on-line computerized, computers and various educational computer programs. Not less important than the equipment that was recently installed in the Center is the investment of training the scientific staff, including preparation of detailed educational and training programs.

Detailed program for a one-week workshop on "Water management in modern and traditional agriculture" and on "Renewable energy sources" have been prepared recently. More education and training programs will be prepared by the scientific staff of the Center in the near future.

Appendix 7: Hydrometers/Watermeters/Automatic metering valves

These are volumetric valves which shut-off after passing a certain predetermined volume of water. They use volumetric counters to open and close solenoid valves - automatically operated.
A few examples are given herein:

1. **Bermad, Evron, 900 series**
   (W) Hydrometers / watermeters.
   (D) Automatic metering valves (AMV).
   Combine turbine-type water meter and a diaphragm actuated control valve in one single valve body. It shuts off after delivering a preset volume of water.
   Features:
   The valve is operated by the system's pressure and does not depend on any external source of energy, internal flow straighteners provide accurate flow measurement, optional electric remote readout for the operation of computer-controlled systems.

Figures and technical data are given herein.

2. **Bermad, Evron, MT - Series "Bermadon"** - Automatic Shut-off water metering valves. The "Barmadon" automatically delivers a preset quantity of water, after which it shuts itself off. This design saves water by actually metering flow rather than timing it.
   Features: No electricity required, simple design, high quality materials, minimum maintenance, extreme accuracy and dependability, easy installation and operation, metered water delivery during irrigation cycle is unaffected by pressure fluctuations, can be installed in any position. Figure and technical details are attached herein.

3. **"Ginon" Mad-Gan, Arad LTD, Dalia,** 3/4" automatic irrigator which is actually a dosing valve or dosimeter.
   It has a dual setting scale for time and volume. The volume measurement is accurate and unaffected by pressure fluctuations, method of irrigation (sprinklers, drippers etc.) or pipes conditions. The time scale gives an indication of the approximate watering duration for various volumetric settings.

4. **Arad Ltd., Dalia, Dose-O-Mat 1":** Automatic metering valve. Anti-corrosion plastic body, low loss of head, high accuracy.
Suitable for gardening, both private and public, as well as for agricultural applications. The operation principle is based on direct measurement of the flowing water. Pressure fluctuations do not affect the accuracy.
The construction and operation are simple and do not require special skill for handling. It can be used both as a single unit or with additional hydraulic valves, in an automatic sequential irrigation system.

CONTROL VALVES BERMAD

900 Series
(W) HYDROMETERS / WATERMETERS
(D) AUTOMATIC METERING VALVES (AMV)
For irrigation, waterworks and industrial systems

This exclusive, patented valve combines a turbine-type water meter and a diaphragm-actuated control valve in one single valve body.

The **HYDROMETER (W)** is available in a variety of different models for a multitude of applications. The turbine-type water meter measures flow with an accuracy of ±2%, while the built-in control valve performs, simultaneously, On/Off or pressure/flow regulating duties.

The **AUTOMATIC METERING VALVE** (AMV) is an upgraded version of the Hydrometer. It automatically shuts off after delivering a preset quantity (volume) of water. Such valves can be employed in sequential operation of irrigation blocks through hydraulic remote control tubes.

FEATURES

- The valve is operated by the system pressure and does not depend on any external source of energy (electricity, pneumatics, etc.).
- Internal flow straighteners provide accurate flow measurement, with no need for straight pipe allowances before and after the valve.
- Optional: electric remote readout for the operation of computer-controlled systems.
- Future upgrading: the HYDROMETER's versatility provides the option of simple and easy upgrading of the control head and the hydraulic valve.
- Major agricultural application: can be incorporated in an irrigation hydrant (see picture on this page).

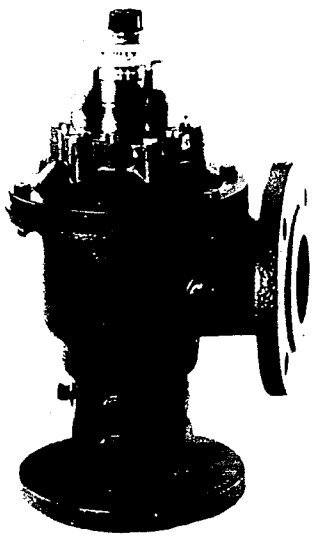

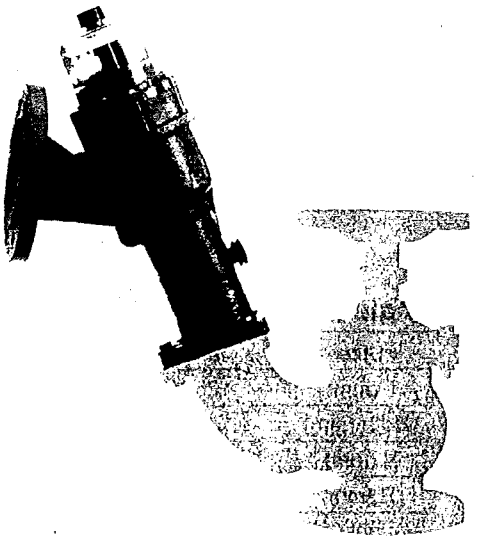

TEHNICAL DATA

Specifications

- **Valve Pattern:** globe, angle
- **Sizes:** 1 1/2", 2", 2", 3"R, 3", 4", 6", 8
- **End Connections:**
  – 1 1/2", 2", 3"R: female threaded NPT/BSP
  – 3", 4", 6", 8": flanged ISO PN16; BS-D; ANSI # 125
- **Operating Pressure Range:** 0.5-10/16 kg/cm^2 (7-150/225 psi)
- **Temperature Range:** water up to 50°C (120°F)
- **Accuracy:**
  – Complies with, and exceeds, ISO 4064 Class A metrological requirements, Flow metering ±2%
  – Complies with ISO 7714 for metering valves Type I, dosing accuracy ±2% of dial capacity, or better
- **Materials:**
  Body and cover: Cast Iron
  Mechanism: Plastic, Stainless steel, Brass
  Diaphragm: Naylon-fabric, reinforced Natural Rubber
  Seals: Buna-N and NR

Flow Chart

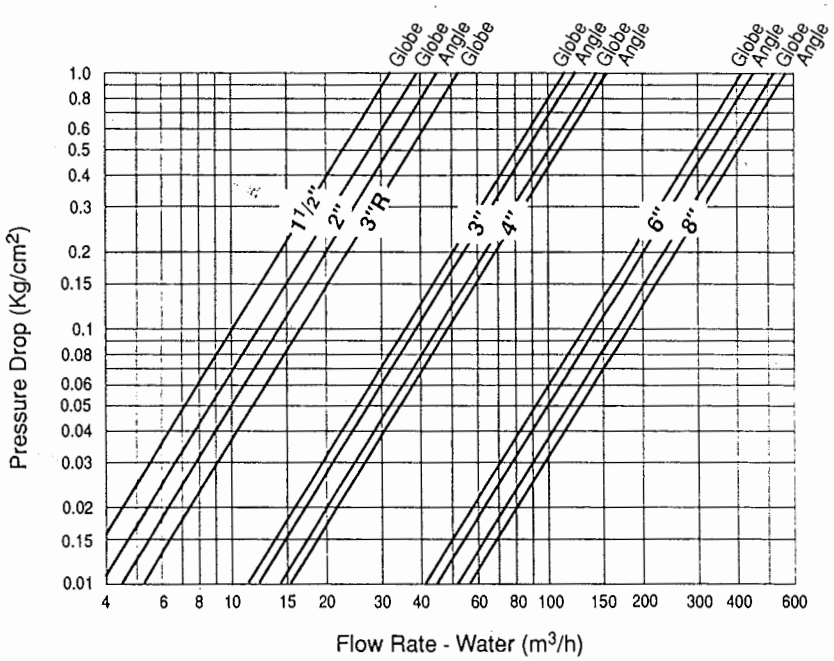

	1 1/2"	2"	3"R	3"	4"	6"	8"
*Qmax - Max. flow rate (m^3/h) peak duty	20.5	35.0	50.0	130.0	220.0	350.0	550.0
*Qn - Nominal flow rate (m^3/h) for continuous duty	15.0	25.0	30.0	65.0	110.0	215.0	350.0
*Qt - Transition flow rate (m^3/h) ± 2% accuracy	2.5	3.0	3.0	8.0	12.0	30.0	50.0
*Qmin - Min. flow rate (m^3/h) ± 5% accuracy	1.2	1.3	1.3	1.6	1.8	6.0	7.5
Min. flow rate (m^3/h) for safe valve closure	1.5	2.0	2.5	6.0	15.0	20.0	25.0

* Selected models comply with Israel IS 63

Dimensions and Weights

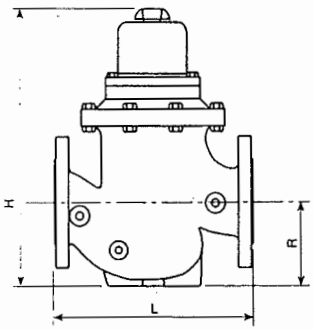

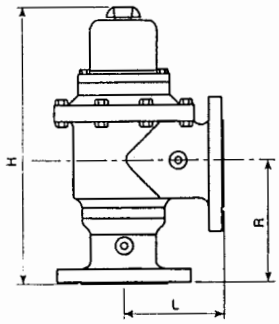

Globe Pattern

Size	*1 1/2"	*2"	*3"R	3"	4"	6"	8"
L (mm)	210	220	220	290	360	550	600
Width (mm)	135	137	138	210	250	380	380
H (mm)	293	300	300	405	470	625	640
R (mm)	103	90	90	125	137	215	220
Weight (kg)	5.5	7.0	8.0	24	44	107	110

Angle Pattern

Size	*2"	*3"	4"	6"	8"
L (mm)	125	150	185	250	250
Width (mm)	137	210	250	380	380
H (mm)	320	425	460	610	620
R (mm)	123	197	225	300	280
Weight (kg)	9.0	18	35	95	110

* 1 1/2", 2", 3"R threaded

Pulse Transmitter

- For electric remote readout.
- For computer-controlled system operation
- **Electrical data:**
  Switching voltage: 125V AC max.
  Breakdown voltage: 400 V DC min.
  Switching current: 0.5 Amp. max.
  Carry current: 1.0 Amp. max.

Pulse Rate

Size \ One Pulse Per	10 Liter	100 Liter	1 m^3	10 m^3
1½" - 2"	•	•	•	
3" - 3"R	•	•	•	•
4"	•	•	•	•
6"		•	•	•
8"		•	•	•

SELECTED MODELS

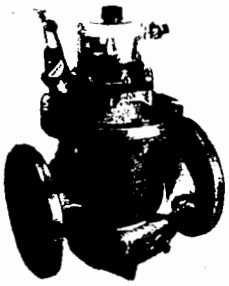

Model 910-P
Electric Control and Pulse Transmitter Hydrometer
Model 910-P has a 3-way solenoid pilot valve with manual override and an electric remote readout pulse transmitter which feedback a computer controlled system or an electric switch board of a pumping system.

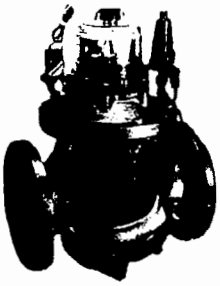

Model 920-55
Pressure Reducing and Electric Control Hydrometer
Model 920-55 combines a pressure reducing Hydrometer, which reduces high upstream pressure to a lower set downstream pressure, with an electric remote control solenoid.

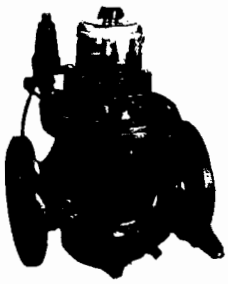

Model 927
Rate-of-flow Control and Pressure Reducing Hydrometer
Model 927 maintains a preset downstream pressure and limits the rate-of-flow to a preset value, regardless of changes in system pressure or demand.

CONTROL VALVES BERMAD

Automatic Metering Valve

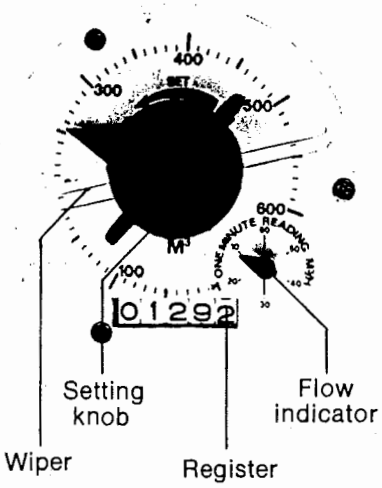

Dial Capacity Selection

Dial Capacity m³	Scale Graduation m³	
4	0.1	1½" - 2" - 3" - 3"R
12	0.2	
40	1	
80	1	
120	2	
200	5	
350	10	
600	10	
800	10	
1200	20	
2100	50	
3500	100	4" - 6" - 8"
6000	100	
8000	100	
12000	200	

Hydrometer

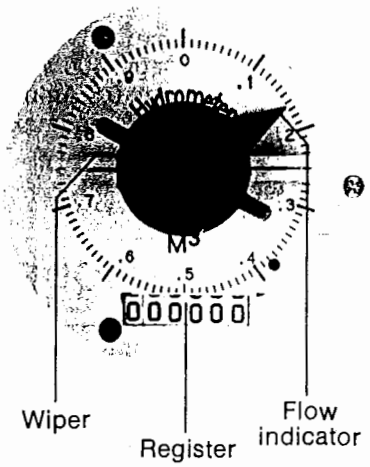

BASIC VALVE ASSEMBLY

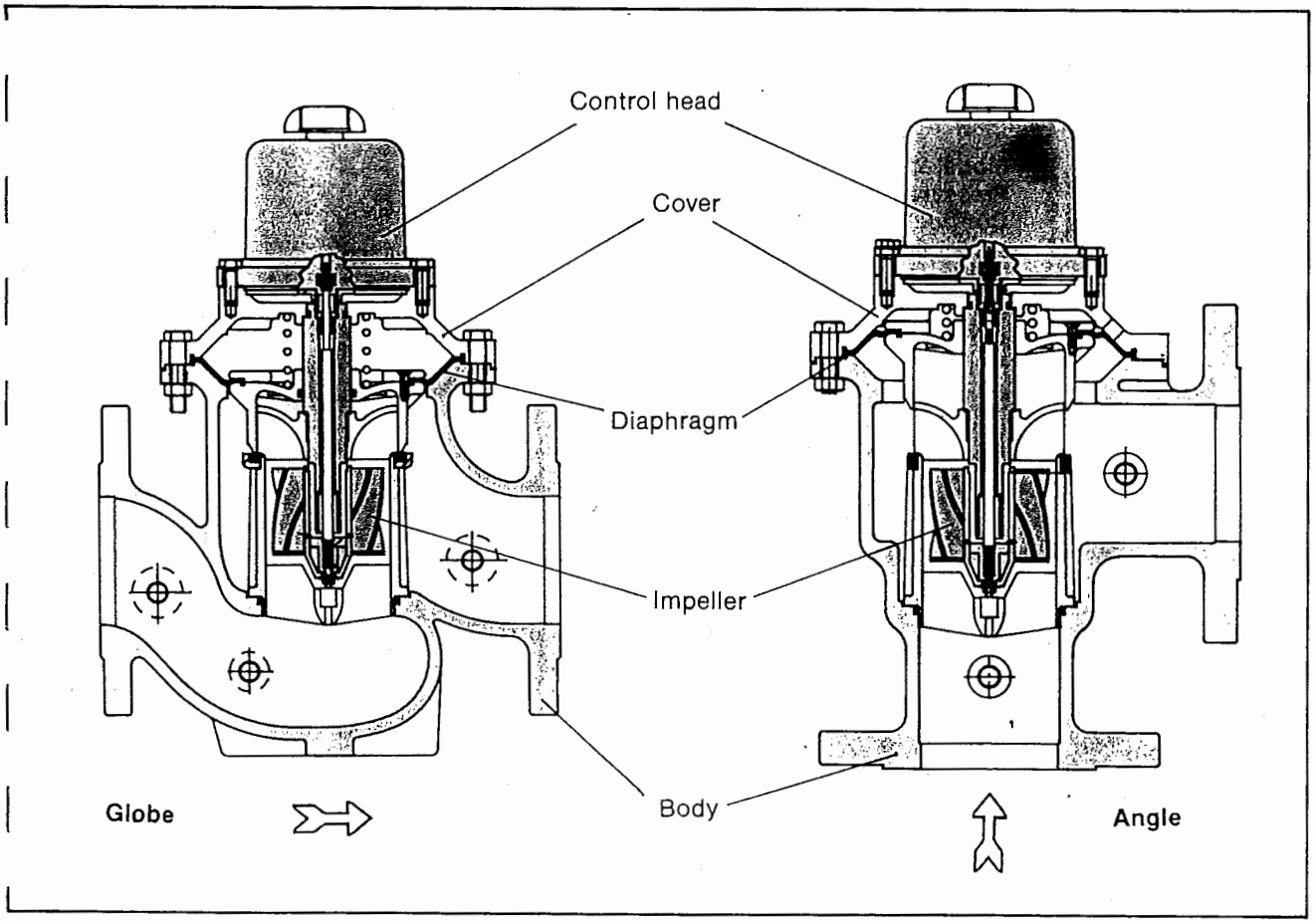

CONTROL VALVES BERMAD

MT Series
"BERMADON" — AUTOMATIC SHUT-OFF WATER METERING VALVES

For use in small-scale automatic irrigation and refilling of small tanks

NEW

The BERMADON automatically delivers a preset quantity of water, after which it shuts itself off.
This original design saves water by actually metering flow rather than timing it.

FEATURES

- No electricity required.
- Simple design and high quality materials.
- Minimum maintenance.
- Extreme accuracy and dependability.
- Easy installation and operation.
- Metered water delivery during irrigation cycle is unaffected by pressure fluctuations.
- Can be installed in any position.

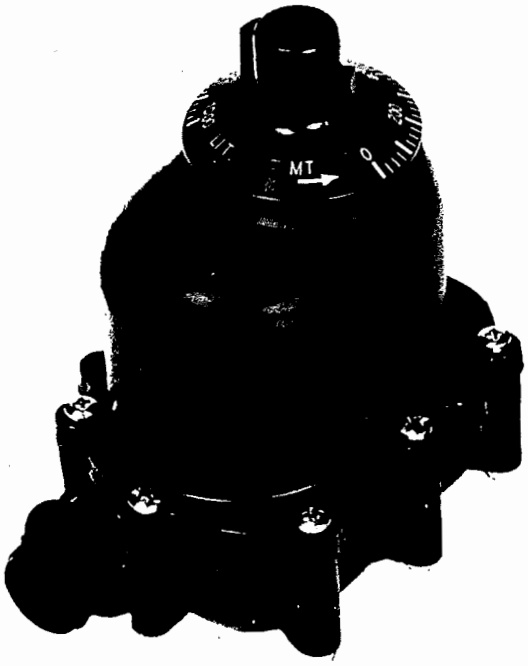

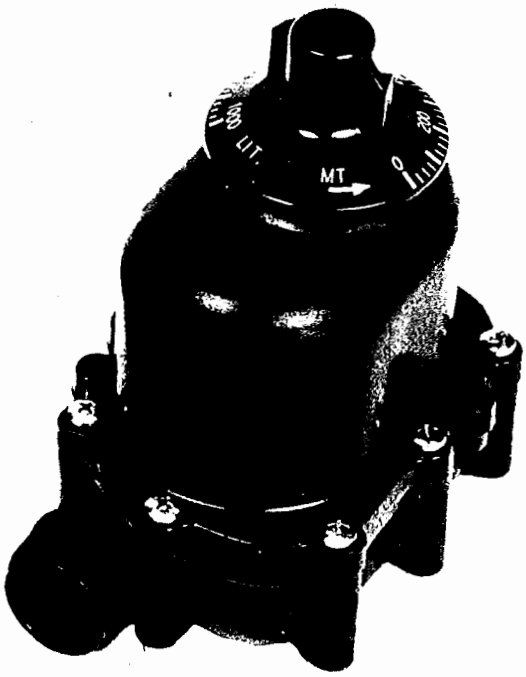

TECHNICAL DATA

Specifications

- **Sizes:** 3/4", 1"
- **Connections:** male threading, Rc(BSPT)/NPT
- **Pressure Rating:**
  ISO: PN 10
  ANSI: Class 125
- **Operating Pressure Range:**
  0.5-6 kg/cm² (7-90 psi)
- **Valve Category:**
  MT - Normal flow
  MTA - Low flow
- **Temperature Range:**
  water up to 80°C (180°F)
- **Accuracy of dosing:** 2% of the max. scale value plus 4% of the set volume. (Meet requirement of ISO 7714 Class 3)
- **Materials:**
  Base, housing and gears: Plastic
  shafts and springs: Stainless steel
  Seals: EPDM and NBR

Flow Chart

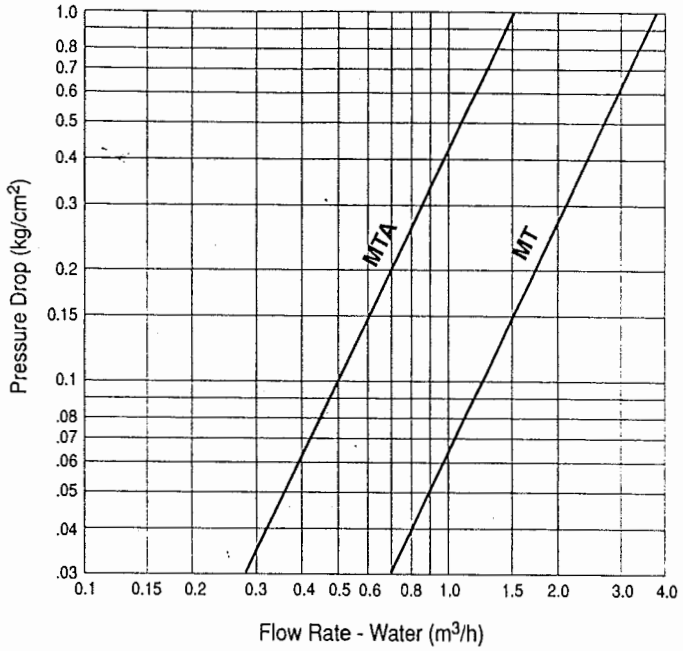

Flow Rate and Dial Capacity

Valve Categoty	Size		Nominal Flow Rate (m³/h)	Flow Rate (m³/h)	
	3/4"	1"		Min.	Max.
MT	•	•	3.0	0.5	5.0
MTA	•	•	1.5	0.1	2.0

Dial Capacity	Graduation (liters)
100 Liter	2.5
1000 Liter	25
2000 Liter	50
4 - m³	100
10 - m³	250
20 - m³	500
50 - m³	1000
50 Liter	1
500 Liter	10
2000 Liter	50
4 - m³	100
8 - m³	200

Dimensions and Weights

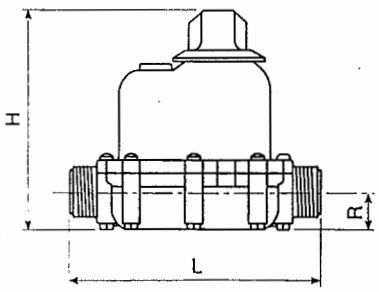

Size	3/4"	1"
L (mm)	166	166
H (mm)	145	145
Width (mm)	100	100
R (mm)	25	25
Weight (kg)	0.60	0.65

K3/4

Simple setting dual scale: time & volume

The GINON is not a "timer". It actually measures the amount of water flowing through it and delivers the required volume based on this measurement. Set quantities are delivered accurately without being affected by pressure fluctuations, method of irrigation (sprinklers, drippers etc.) or pipes condition. However, for those who feel more at home with time settings, a dual scale has been provided indicating approximate watering duration for various volumetric settings.

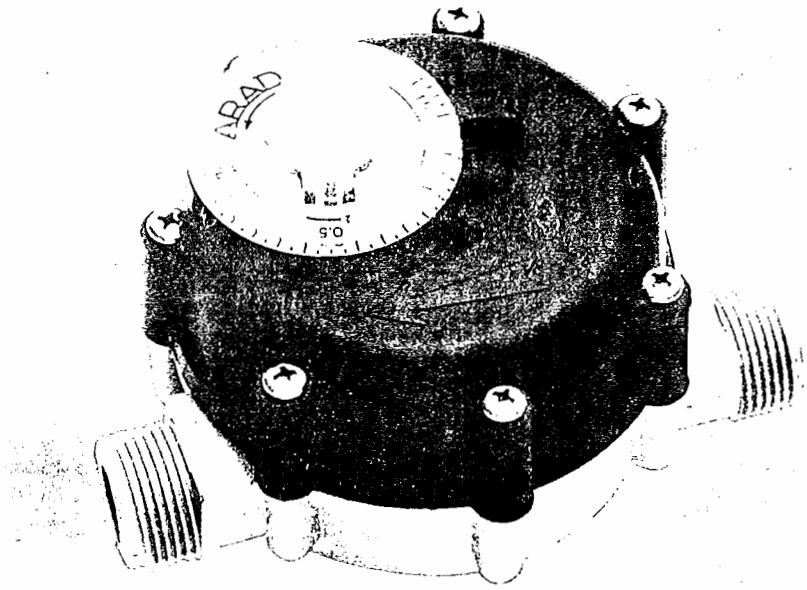

ARAD LTD. DALIA
WATER MEASURING TECHNOLOGIES
ARAD LTD. DALIA
Association Dalia Ramat Menashe 19239 Doar Dalia Israel Tel (972) 4-9897911 Fax Export Dept (972) 4-9897914

INSTALLATION

The "GINON" can be installed in any position.
Flow direction should follow the arrow.
Care should be taken to prevent over-tightening of the threads.

TECHNICAL DATA

		S 3/4"	N 3/4"	N 3/4"
Full Scale	lt.	1,000	2,000	10,000
Flow Rate Range	l/h	60-500	100-2,000	100-2,000
Recommended Typical Working Flow Rate	l/h	400	1,300	1,300
*Approximate Full Scale Irrigation Time at Typical Flow Rate	hours	2½	1½	8
Scales	lt.	250,1000 (55 Imp Gal)	2,000, 10,000 (500 U.S.G.)	
Working Pressure	bar	0.5-10		
Accuracy of Full Scale		±4%		
Connections		3/4" B.S.P.T male thread		
Weight	gr.	300 (0.84 lb.)		

* Note: 3 time zones on the knob indicate approximate irrigation time for set volume at typical flow rate.

OPERATION INSTRUCTIONS

1. Turn the knob in the direction of the two arrows (counter-clockwise) and set the required quantity facing the arrow near it.
   Alternatively - use the timer scale for approximate setting of the irrigation duration.
   Water is already flowing. The knob turns slowly until it reaches "0" then flow will stop automatically.
2. In order to shut off the "GINON" while it is operating - simply turn the knob to "0" (any direction will do).

PRESSURE LOSS CURVES

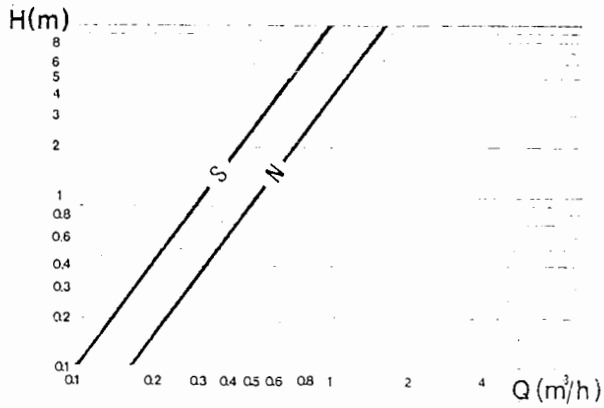

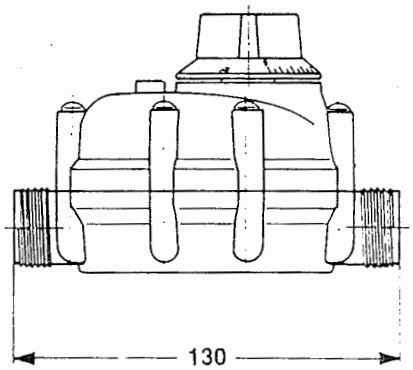

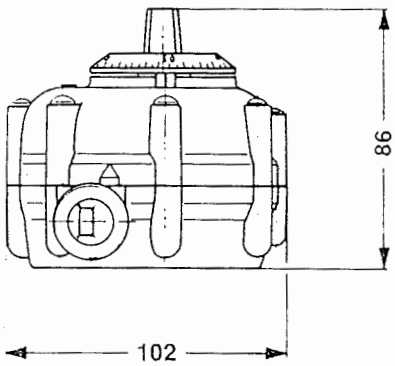

Continuous development of our products may necessitate changes in details without prior notice.

ARAD LTD. DALIA
WATER MEASURING TECHNOLOGIES

T.D.-106-3.95

DOSE-O-MAT

Automatic metering valve

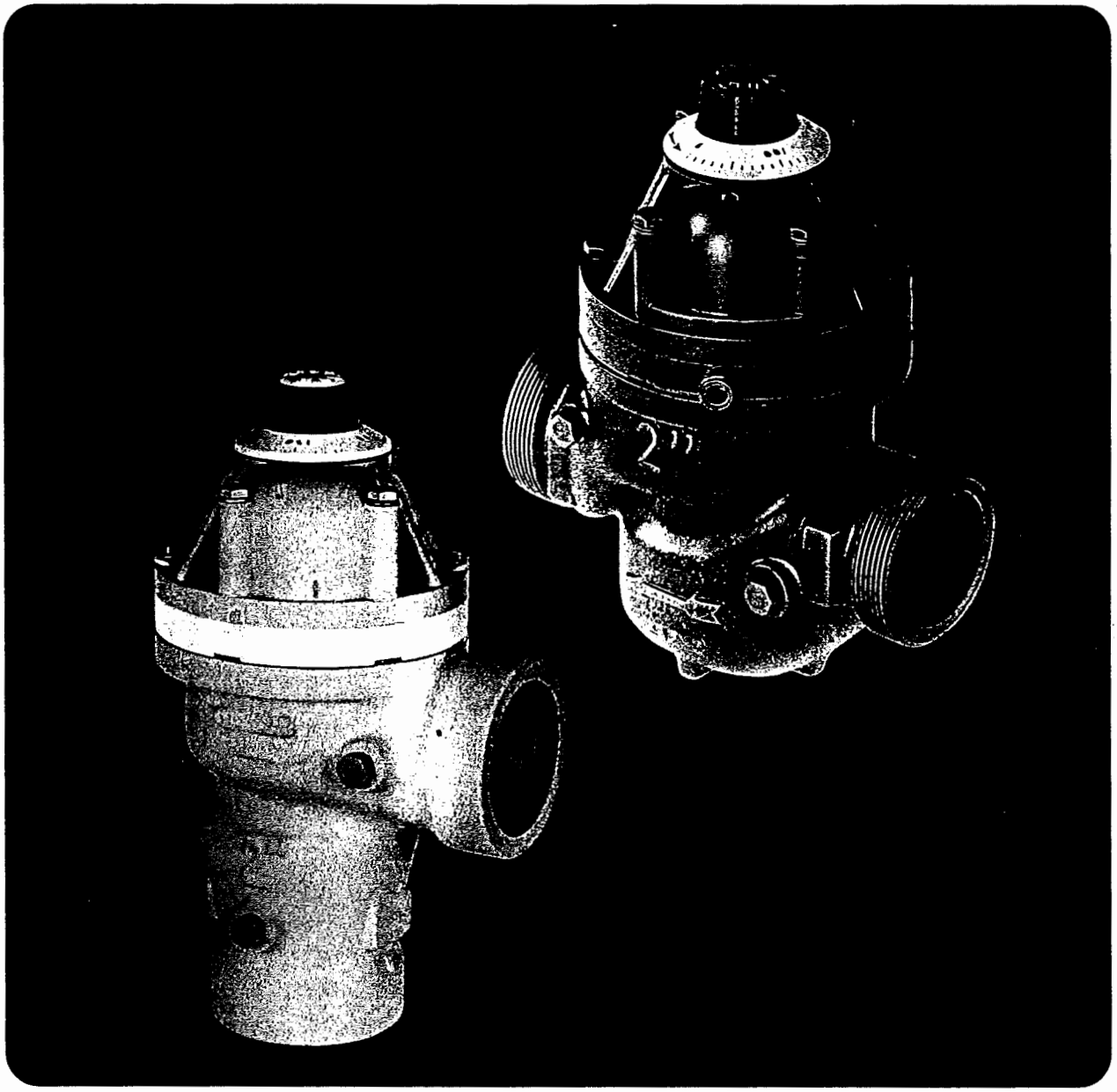

ARAD LTD. DALIA

WATER MEASURING TECHNOLOGIES

ARAD LTD. DALIA

Association Dalia Ramot Menashe. 19239 Doar Dalia, Israel. Tel: (972) 4-9897911. Fax Export Dept.: (972) 4-9897960

K/KA - DOSE-O-MAT

The DOSE-O-MAT is an automatic irrigation metering valve. It shuts off automatically after a pre-set quantity of water has flown through. The amount of water is set according to the crop, soil and climatic conditions. Line pressure variations have no influence on the accuracy. The DOSE-O-MAT is very simple to operate and there is no need for skilled labour. The use of automatic volumetric valves saves work and water. Reduction in water consumption may reach 30% compared to time-based irrigation.
The DOSE-O-MAT can be used as a single point unit or, through suitable connections to other similar units, to form an automatic sequential system, with or without additional "slave" valves.

Manufactured: wet control mechanism and internal pilot valve.

There are two types of DOSE-O-MATs:
K - Horizontal type
KA - Angle type

Operating the DOSE-O-MAT: Turn the knob counter-clockwise, as indicated by the arrow.

STANDARD SCALES

m³	3	10	20	40	50	100	200	400	1000				
US Gal.										25 000	50 000	100 000	250 000
K 1½"	●	●	●		●	●	●						
K/KA 2"			●	●		●	●	●	●	●	●	●	●

K/KA - LOSS OF HEAD CURVES

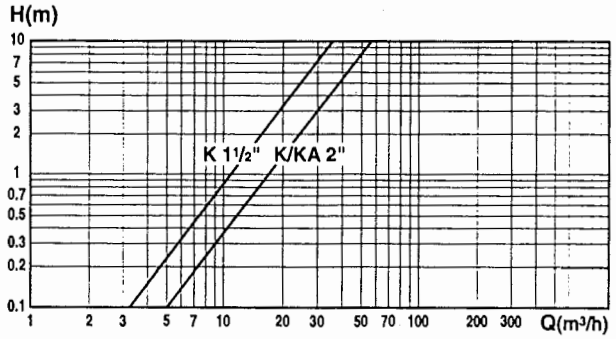

TECHNICAL DATA

Size	in.	**1½"**	**2"**
Minimum flowrate	m³/h	1.5	2
Maximum flowrate	m³/h	15	30
Minimum working pressure	bar	1	1
Maximum working pressure	bar	10	10
Accuracy		± 4%	± 4%

DIMENSIONS

Model			**K**		**KA**
Size		in.	**1½"**	**2"**	**2"**
Length	L	mm	160	190	158
Width	B	mm	126	126	126
Height	H	mm	203	235	265
	A	mm			96
	C	mm			122
Weight		Kg	2.3	4.4	4

Installation: any position.

CONNECTIONS

K 1½"	with couplings 1½" male thread
K 2" / KA 2"	with couplings 2" male thread internal thread B.S.P.T.; N.P.T.

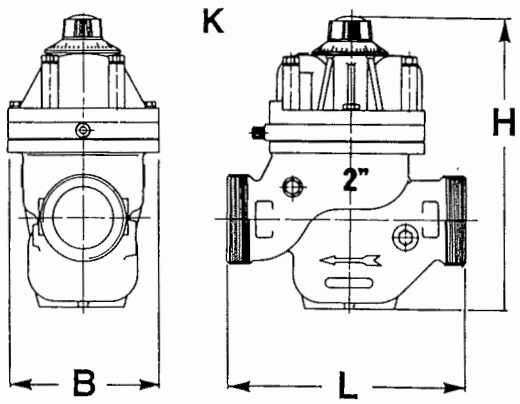

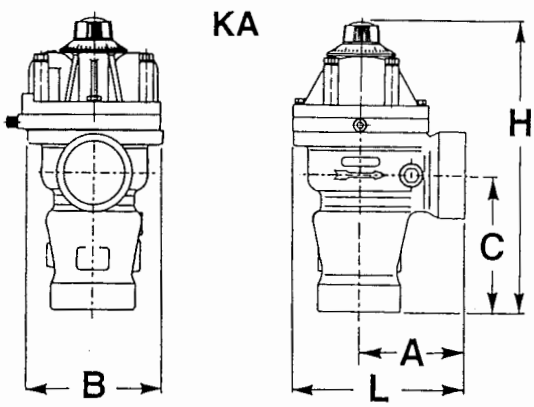

Continuous development of our products may necessitate changes in details without prior notice.

Appendix 8: Tensiometer and soil moisture sensors

This type of instruments control the watering according to direct sensing of the moisture condition in the soil in the vicinity of the roots. The advanced instruments has the following features:

1. The operator can decide what moisture level to maintain.
2. The unit has a low energy demand and it can be powered by a battery for long operation time.
3. Suitable for outdoor installation.
4. Can be operated as an independent operation system or can link with irrigation controllers.

A few examples are given herein:

1. Netafim, Flori (Water Master)

Automated irrigation controller, self-operated via a soil moisture sensor.
Appears in two models: Flori AC and Flori DC.
The major units of these system are:

a. The controller with the soil moisture selector.
b. Moisture sensor, placed in soil.
c. Electric valve.
b. Power supply: 9V Battery for the Flori DC or transformer for 24V AC, 500 mA for Flori AC.

The instrument is waterproof and designed for outdoor installation. It has an option of "time window" for irrigation interruption (2 to 20 hours), at this "time window" the system will not irrigate even if soil moisture reduce below the operation set-point . By this feature one can choose not to irrigate at un-desired hours, every day. For example, one can choose not to irrigate lawns at hours that people are using it, or not to irrigate at peak hours of water demand.

Flori

SENSOR INPUT

Automated Irrigation Controller
Self-operating via a soil moisture sensor

The only irrigation controller that responds to plant needs – not pre-set time schedules

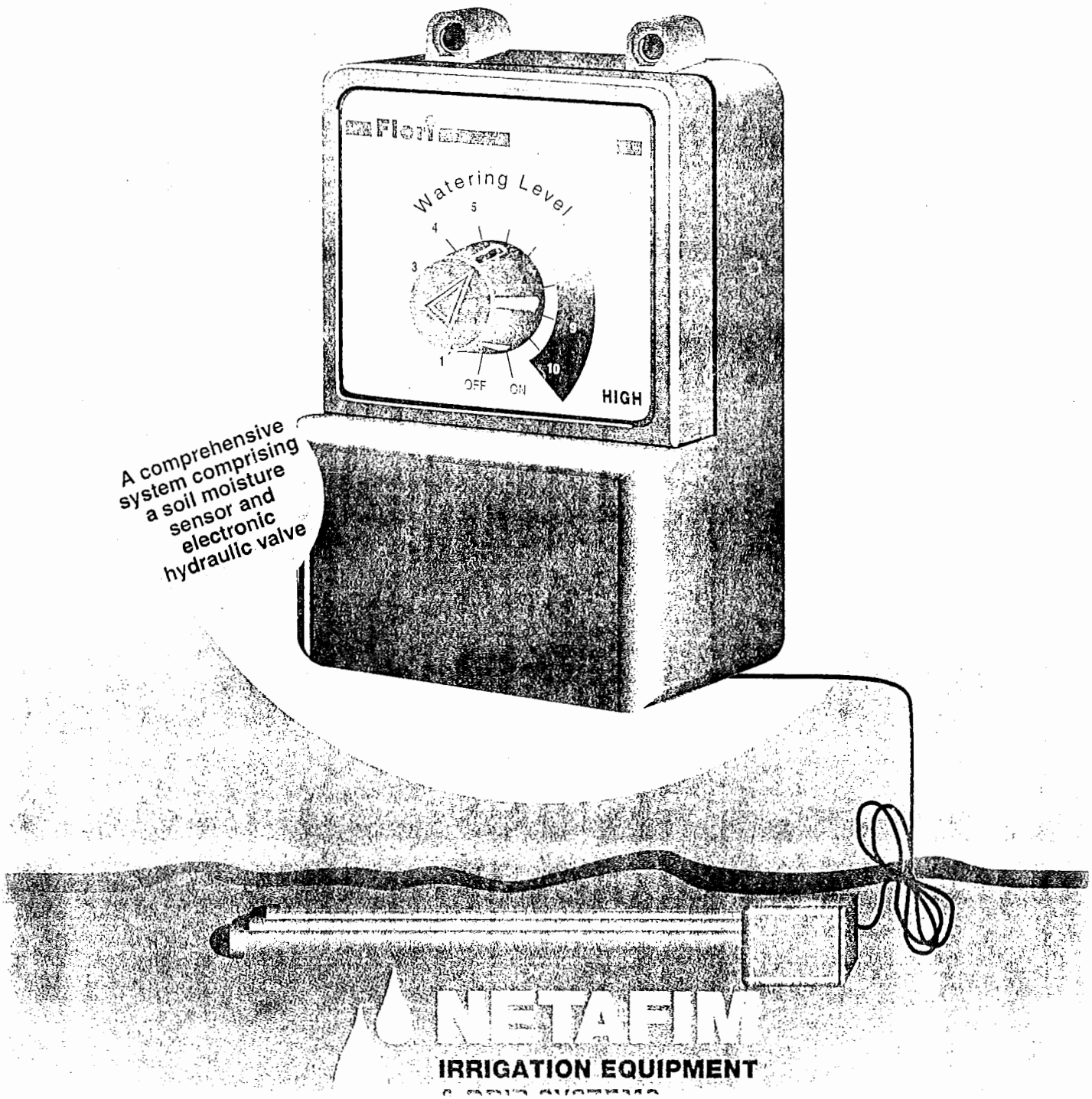

Flori

SENSOR INPUT

- Simple, easy operation. A turn of the dial sets the required moisture level.
- Precise irrigation exactly matches soil moisture requirements instead of pre-set time schedules.
- Assures optimal moisture levels for plants.
- Push button control for setting required irrigation levels.
- Low battery alert light indicates need for battery replacement.
- Fully resistant to severe climates. Designed for outdoor installation.
- Runs on a 9V alkaline battery or transformer.
- Sensor is unaffected by salinity or soil conditions.
- Flori can be installed in any type of soil.

Two models available:

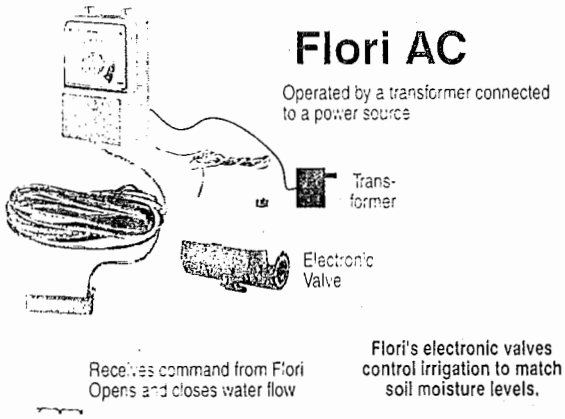

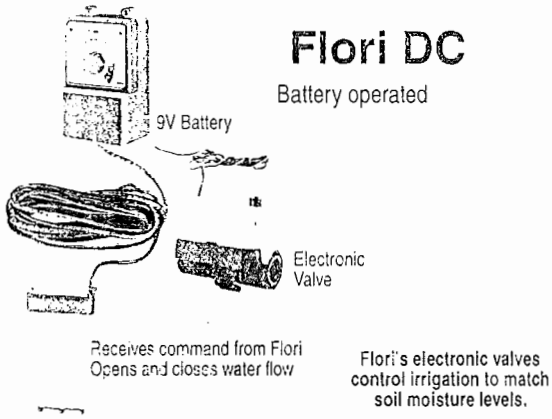

Easy, Friendly Operation

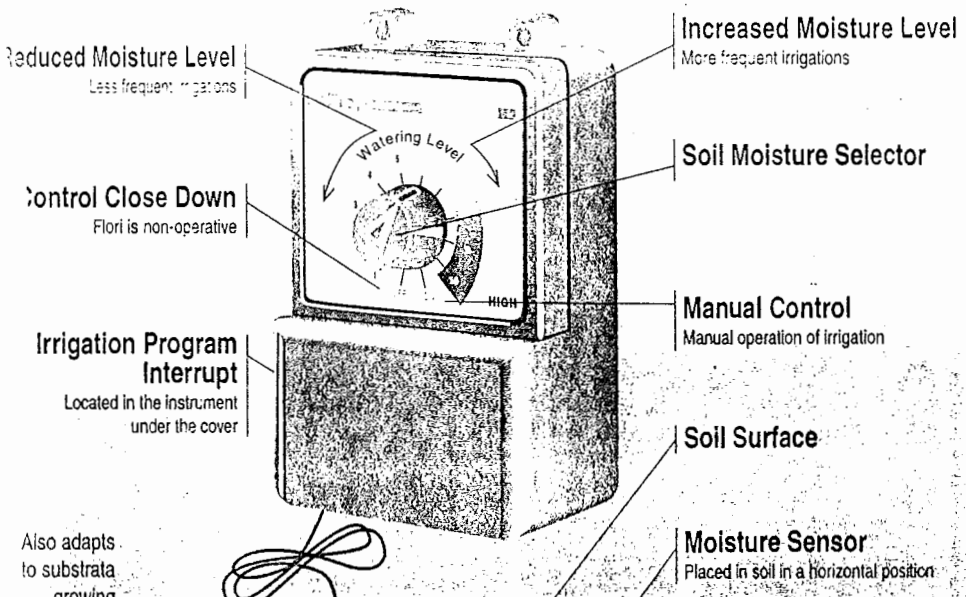

Technical Specifications

Voltage:

- Flori DC – 9V alkaline battery
- Operating time – one year (1000 irrigations)
- Flori AC – 24 VAC, 500 MA power supply
- Temperature resistance – between 0° – 60°C
- 10 functions. Set between position (low moisture) and position 10 (hi moisture).
- Distance between sensors – 5 me (can be extended to 30 meters).
- Irrigation interruption – between 2 hours and 20 hours daily.
- Designed for outdoor installation; waterproof.

Kibbutz Hatzerim D.N. Hanegev, 85420, Israel. Tel: 972 7 473111, Fax: 972 7 420098.
Kibbutz Magal D.N. Hefer, 38845, Israel. Tel: 972 6 287222, Fax: 972 6 287210.
Kibbutz Yiftach D.N. Merom Hagalil 13840. Israel. Tel: 972 6 942761, Fax: 972 6 951221.

IRRIGATION EQUIPMENT

Appendix 9: Irrigation controllers

These are programmable (sometimes called "computerized") water control systems. The system consists a controller unit and several peripheral instruments such as regulated valves, filter and pressure regulators. Such systems can control simultaneously several valves (stations) according to inputs from several sensors or pre-programmed settings.
A few examples are given herein:

1. **Arad Ltd., Dalia. "Super 4" - Computerized Water Control System**:
Integrated watering control system for private and public gardens. The controller operates a single internal valve. It has a very low energy demand and can be operated for at least one watering season by a 9V alkaline battery.
It has the following main features:
a. Weekly programming according to the days of the week.
b. Wide range of watering duration: from 1minute to 24 hours. (in steps of 1minute)
c. Single and multiple daily watering cycles, can be programmed.
d. Programmable delay between cycles.
e. Can also be operated manually.

2. **Netafim, "Miracle" Irrigation Controller,** (Developed in cooperation with Motorola). This irrigation controller is simple to operate and reliable. It may control 6-12 stations (valves) plus 1master valve. The programming capabilities are very flexible and changes can be done even when the system is irrigating. The system has a very low energy demand and can be supplied either by a 9V alkaline battery or by a 9V AC transformer. It may have up to 3 independent programs concurrently, up to 4 start times per program. It has a 7 days "weekly" calendar mode and skip days mode with up to 7 days interval between irrigations. More technical details are given in the attached figure.

3. **Jordan - Galcon,** Irrigation Computers for home and professional gardening. This series include Jordan 4, Jordan 8, Jordan super 8 and Jordan DC.
The computer controls 6 to 8 valves & 1main valve. The program is weekly, cyclic, with separate "window" for every valve. It has a short circuit alarm for every valve. Can be applied for watering for fertilizing. Programming is easy and flexible.
Jordan 6/8: Main features:
* 6 to 8 valves + 1main valve.
* Separate programming for every valve.
* Watering time: 1minute to 12hr.
* Watering cycle: 2 minutes to 30 days.
* Identification of short circuited valves.
* Up to 2 valves can be operated simultaneously.
* Can also be operated manually or semi automatically.
* Three inputs for sensors. Each sensor can be connected to any valve.
* Alarm program: Daily irrigation of 10 min. per valve.
* Battery backup to keep programs.

Jordan Super 8: Has all the features of Jordan 8 with added accuracy of irrigation time, "window" and 4 start times per day in a weekly program.
Jordan DC-8: Has all the features of Jordan Super 8 with added features:
* Operation with 2 alkaline 2V batteries.
* No need for electricity connection.

More details are given in the attached figures.

4. **Galcon DC1, DC4,** Battery powered watering controller. Simple step-by-step programming with only 4 buttons, with integrated wide LCD display. Completely waterproof.
Main features:
* Independent station programming.
* Single station (DC-1) and 4 stations (DC-4).
* Up to 4 start times per station
* Watering time from 1min. to 12hours (in 1min. intervals)
* Irrigation schedule: 7 days calendar, 1to 30 days interval.
* Powered by two 9V alkaline batteries.
* Rain off position.
* Waterproof.

More details are given in the attached figures.

5. **Galcon AC6, AC 4,** Similar to Galcon DC 4, with the following differences:
* Electronic controller 4, 6 stations.
* External transformer.

6. **Galcon 2040 EZ, 2321, 3321 Watering controllers**
Simple yet professional watering controllers. Have a range of watering programs: regular, fast and "watering window" program.
Programming button and selector make installation fast and simple on existing or new systems.

7. **Galconit 2010 EZ, 2007, 3007**
Computerized controller for automatic watering. Used for operation of watering systems without need of electric cables in the garden. Simple and fast programming. Operated by 2 batteries that need to be replaced only once a year. Includes a two-way hydraulic valve (sizes from 3/4" to 3" diameter). A waterproof electronics and solenoid system. Can withstand any weather conditions.
Details are given in the attached figures.

Super 4

INTEGRATED WATERING CONTROL SYSTEM FOR PRIVATE AND PUBLIC GARDENS

Compact, optimized integration of the four basic watering system units:

- ✓ Computerized Controller
- ✓ Main valve
- ✓ Main filter
- ✓ Pressure regulator

The system's units are fully protected by a lockable enclosure.

ARAD LTD. DALIA

ARAD LTD. DALIA

/ATI MEASURING TECHNOLOGIES Association Dalia Ramot Menashe 19239 Doar Dalia. Israel. Tel: (972) -4-9897911 Fax Export Dept. : (972)-4- 9897965

Super 4

INTEGRATED WATERING CONTROL SYSTEM FOR PRIVATE AND PUBLIC GARDENS

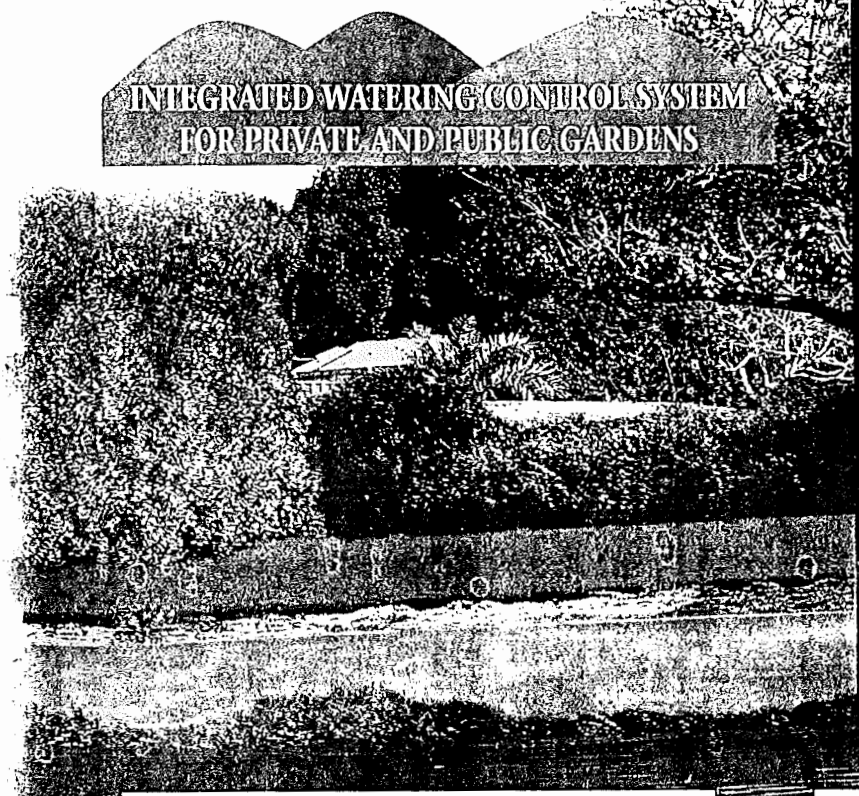

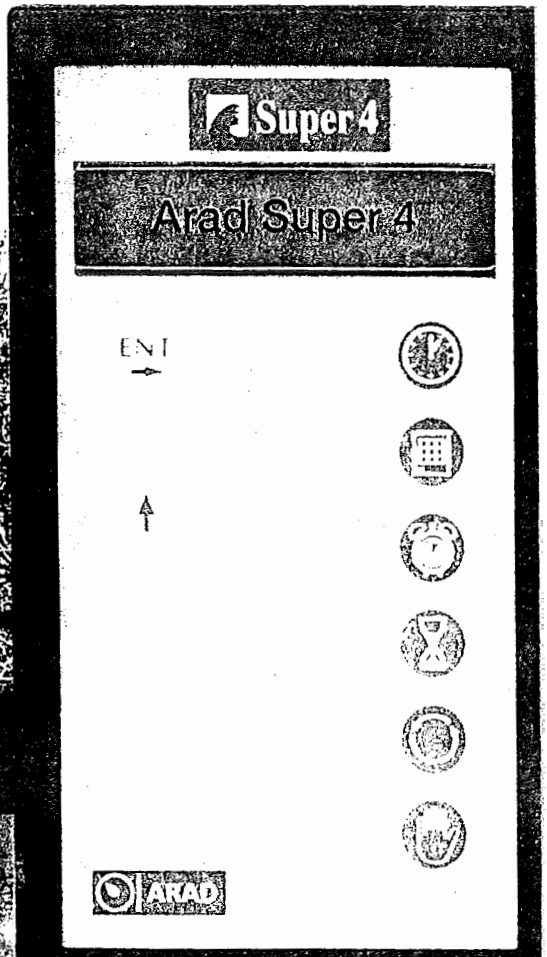

STATE-OF-THE-ART COMPUTERIZED WATERING CONTROL SYSTEM

- ✓ Unique, all-in-one, integrated watering control system
- ✓ Patent Pending
- ✓ Reliable, field proven system
- ✓ 1-Year Warranty

Super 4 APPLICATIONS

Designed for installation in private gardens, greenhouses, and public parks.

THE ADVANTAGES OF Super 4

- ✓ Optimized all-in-one unit offers considerable cost savings over alternative solutions.
- ✓ Simple to program and operate.
- ✓ Complete control of watering timing, duration and water consumption.
- ✓ Easy-to-install.
- ✓ Leakage-free: No need for pipe accessories
- ✓ Standard connectors fit all popular garden watering systems.

Super 4 TECHNICAL SPECIFICATIONS

Working pressure : 0.5 - 10 bar
Filtering grade:120 mesh
Inlet and Outlet threads: 3/4" BSPT (male)

Miracle

IRRIGATION CONTROLLER

The Miracle Irrigation Controller is specially designed to combine convenience with advanced technology. Remarkably simple to operate, reliable and highly user-friendly, the Miracle Irrigation Controller features a large display and an easy-to-use keyboard.

This unique new product was deve-loped with an eye to innovation by two world leaders. NETAFIM's expertise in irrigation was combined with MOTOROLA's know-how in communications to produce a truly unique irrigation product.

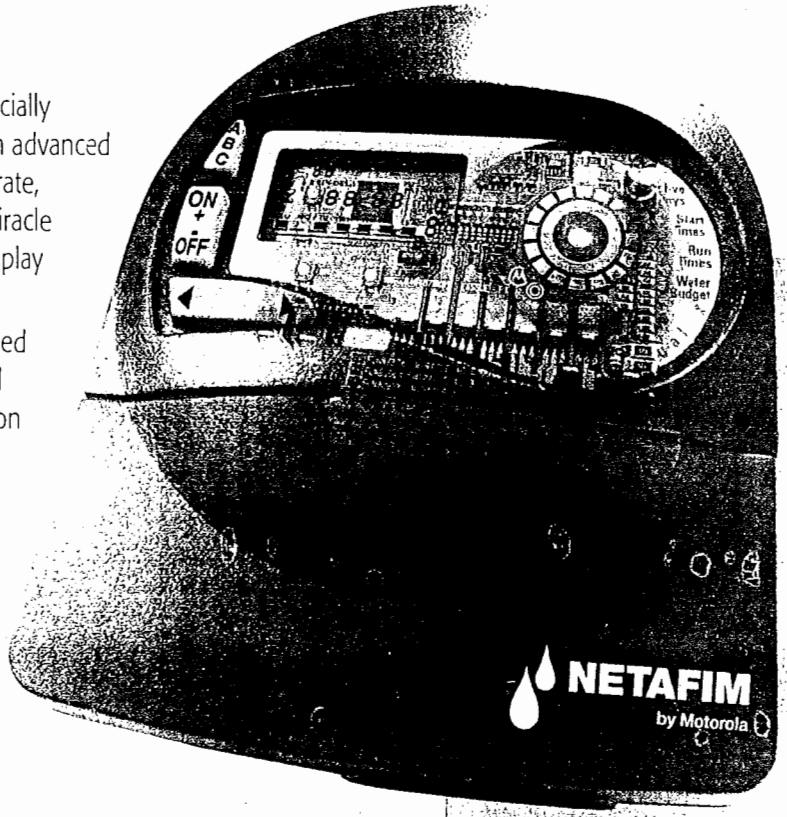

Special Features

"Over-current" output protection

- Identifies short circuit output and locks the station.
- One-at-a-time solenoid operation. Prevents power overload.

Program change during irrigation

- Change program at any time, even during watering cycle.

Real time monitoring

- Shutdown capability while watering.
- While watering via program an open station can be closed.
- Full display of irrigation data.

Sensor input

- Put on hold program A & B.

Manual operation

- One-touch manual operation - valves or program.

Special Features DC model

- No power need. Will operate a year with 9 V alkaline battery.
- Will operate Aquanet, DC or other DC pulse valves (output 13.5V, 4700 µF).
- Can run with 9V battery and built-in plug for 6V battery or 9V transformer

NETAFIM
IRRIGATION EQUIPMENT & DRIP SYSTEMS
Kibbutz Hatzerim D.N. Hanegev 4 • 85420 Israel •
☎ +972 (7) 6473111 • Fax +972(7) 6420098
Kibbutz Magal D.N.Hefer • 38845 • Israel
☎ +972 (6) 6287222 • Fax +972(6) 6287210
Kibbutz Yiftah D.N. Merom Hagalil 13840 Israel •
☎ +972 (6) 6955500 • Fax +972(6) 6902592

GALCON

Battery powered watering controller

Funcionamento con dos pilas alcalinas de 9V

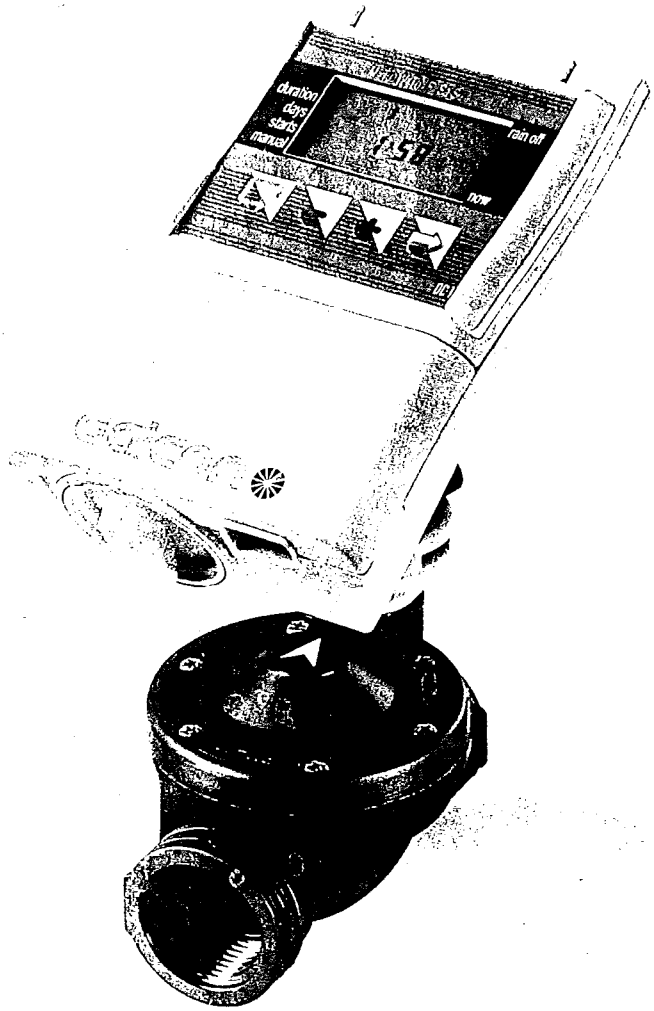

A modern and sophisticated controller for the automatic operation of a watering system without requiring any mains electricity.
The simple step-by-step programming using only 4 buttons with an integrated wide LCD display.
The controller is completely waterproof.
Operated by two 9V alkaline batteries.
Includes a two-way hydraulic value for 3/4"-3" diameter watering systems

Un moderno y sofisticado programador para el funcionamento automático del sistema de riego sin necesidad de la electricidad.
La programación es simple y fácil con 4 botones, asistido por una fácil lectura en el display digital.
El programador es impermeable.
Funcionamento con dos pilas alcalinas de 9V.
El programador puede ser conectado a una válvula hidraulica desde 3/4" a 3".

Galcon- enjoy years of trouble free watering.

Galcon - disfrute muchos años de su sistema de riego.

galcon
Computerized Irrigation Control Systems

DC 1 DC 4

english

- Independent station programming single station (DC-1) and 4 stations (DC-4)
- Up to four start times per station
- Watering time from 1 minute to 12 hrs.
- Irrigation schedule: 7 days calender or interval from 1 to 30 days
- Controller is powered by two 9 volt alkaline batteries
- Rain off position
- Waterproof

spanish

- Programador 1 estación (DC-1) y cuatro estaciones independientes (DC-4)
- 4 arranques por estación
- Ciclo de riego de 1 min. a 12 horas
- Ciclo semanal o a intervalo de 1 a 30 días
- Alimentación por dos pilas 9V alcalina
- Funcion para anulación de programa
- Impermeable

Applications:

For watering lawns, planters, median strips, roof, domestic and public gardens.
For drip, sprinklers and mini sprayer watering.

Aplicaciones:

Para riego de invernaderos plantas y riego residencial
Para riego de jardines, césped y flores.
Para riego de jardines públicos, parterres de viales, jardines y franjas de areas públicas.
Adaptable en arquetas de riego.

Technical Specification

Diameter	3/4"	1"	1 1/2"	2"	3"
Maximum capacity (cubic metres/ hour)	9	10.5	35	40	50
End connections	Threaded NPT BSP				
Standard	ISO NP 10 ANSI Class 125				
Body & Bonnet	Fiberglass Reinforced Nylon				
Spring	Stainless Steel SAE 302				
Diaphragm	Synthetic or Natural Rubber				
Gaskets	Buna N				
Pressure Range	0.7-10 bar				
Max. Temperature	80°C				
Batteries	Two 9V alkaline batteries				

galcon
Computerized Irrigation Control Systems
Kfar Blum 12150 Israel
Tel. 972-6-948514 Fax. 972-6-948777

CE

Galcon

AC4 AC6

The simple and easy solution for watering domestic gardens.

La simple y fácil solución para regar jardines residenciales.

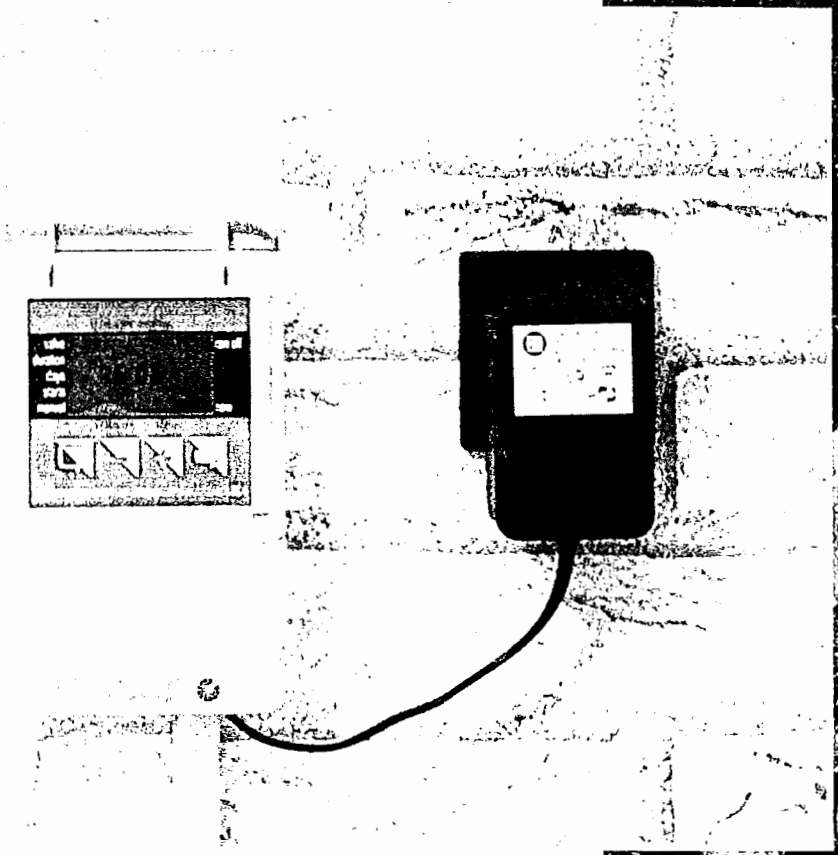

An ideal watering computer for watering domestic and public gardens with up to 6 valves, allowing the individual programming of every valve on a weekly or cyclical program. This product, that integrates sophistication with ease of programming at an attractive price, has a modern design, making the Galcon AC4 and AC6 a perfect solution for almost every garden.
The simple step by step programming using only 4 buttons, and the integrated wide LCD display, allows the programming to be completed and watering started within a very short time.

Galcon- enjoy years of trouble free watering.

Un programador de riego ideal para el riego de jardines privados y públicos con 6 válvulas (estaciones). Se caracteriza por la programación independiente de cada una de las válvulas, semanalmente o por ciclos, (intervalos).
Este producto que integra sofisticadas prestaciones posee un fácil manejo y un atractivo precio.
Tiene un moderno diseño, haciendo las GALCON AC4 y AC6 una perfecta solución para cada tipo de jardín.
El simple paso a paso de la programación utilizando solamente 4 botones y su integrado sistema LCD al programador, permite la programación finable. el riego comenzará en poco tiempo.

Galcon - disfrute muchos años de su sistema de riego.

galcon

① AC 4 ② AC 6

english

- Electronic controller 4, 6 station
- Independent station programming 4 station (AC4) and 6 stations (AC6)
- Up to 4 start times per day per station
- Run times from 1 min. to 12 hrs. (1 min. increment)
- Watering schedule 7 days calander or interval of 1 to 30 days
- Automatic , semiautomatic and manual on/ off position for each station
- Programmable Rain Off
- Pump start/ Main valve control
- Indoor installation
- External Transformer
- 9 Volts alkaline battery back-up

spanish

- Programadores electronicos de 4 y 6 estaciones
- Programador 4 estaciones (AC4) y 6 estaciones independientes (AC6)
- 4 ciclos al dia por programa
- Tiempo de riego de 1 min. a 12 hrs. (incremento de 1 min.)
- Ciclo de riego semanal o a intervalo de 1 a 30 días
- Operación automática, semiautomática o manual para cada estación
- Programa de interrupción de lluvia
- Arranque bomba, válvula principal
- Instalacion interior
- Transformador exterior
- Pila de reserva 9V alcalina

Applications:

Domestic Gardening, Institutional and Public Gardens, Hothouses, Sprinkler and Drip Irrigation Systems.

Aplicaciones:

Jardeneria residencial, jardines públicos, invernaderos y sistemas de irrigación, riego por goteo.

Technical Specification:

Transformer power requirements:	24Volts AC 800MA
Maximum output per valve/operator:	0.20 amps height - 15.6 cms, width - 10.0 cms, depth - 5.5 cms. weight (without transformer) - 600 grams weight (with 220 V transformer) - 1,150 grams

galcon
Computerized Irrigation Control Systems
Kfar Blum 12150 Israel
Tel. 972-6-948514, Fax. 972-6-948777

CE

GALCON

The all-purpose professional watering controller.
Todas las propuestas profesionales del programador de riego.

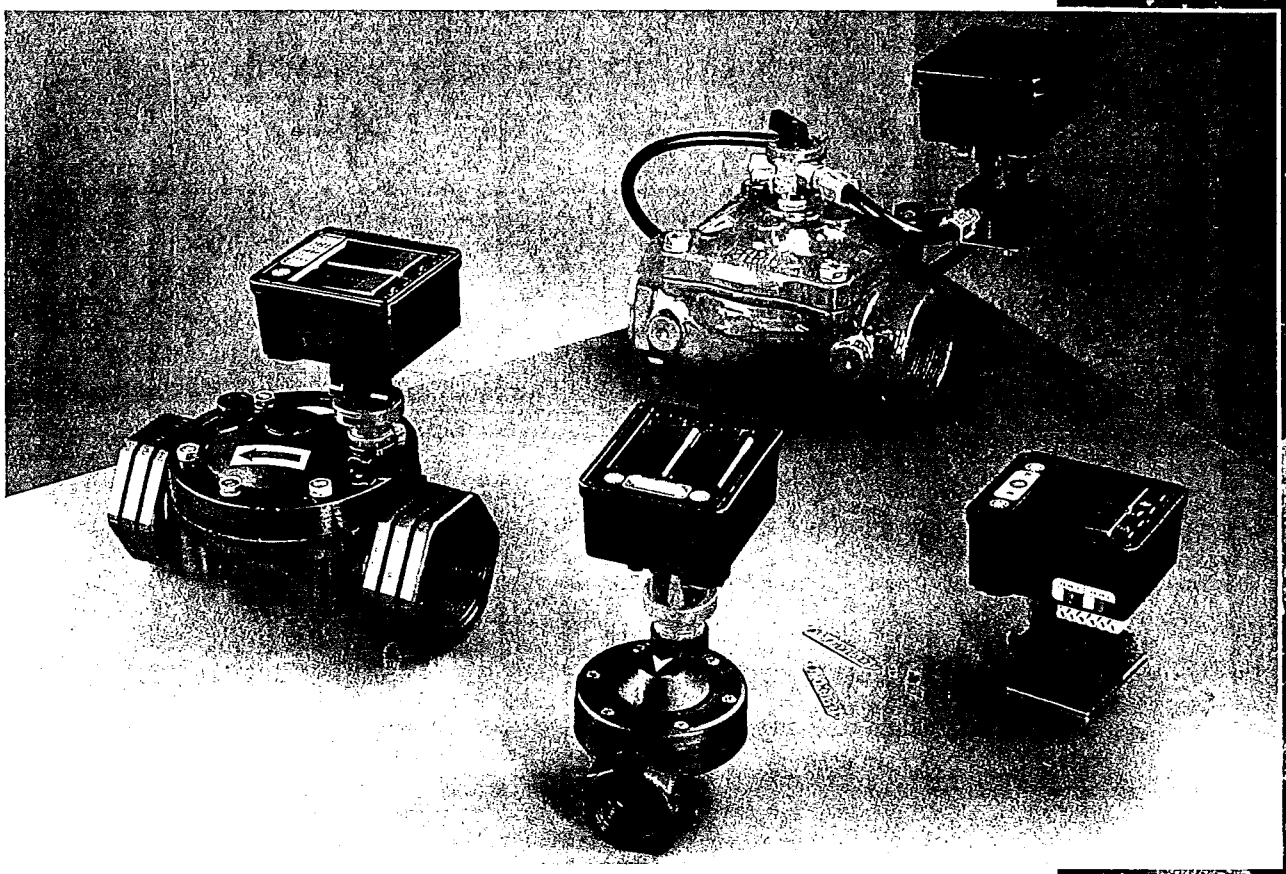

The Galcol controller is the most efficient and economical solution for automatically operating a watering, rooting/sprouting, cowshed and chicken coop cooling, filter flushing and other systems.
A range of watering programs: regular, fast, and a "watering window" program.
Simple and easy programming using a button and selectors make installation fast and simple on existing or new systems
Self-operating with two 9V batteries. No cables or any connection to a power supply required.
A range of options for operating three-way hydraulic valves of different diameters.
Can be used with temperature, rain, water level and other sensors.

Galcon-Convenient, reliable and cost-effective.

El programador Galcol es el mas versátil y la solución mas economica para sistemas automaticos de riego,filtros de limpieza y otros sistemas.
Variedad de programas de riego: medio, rapido y programación con "Ventana de Riego".
Simple y fácil programación, usando un boton y selectores, haciendo que la instalación sea rápida y simple, gracias a este nuevo sistema.
Alimentación mediante dos pilas de 9V.
sin necesidad de cableado ni conecciones, supliendo asi los requisitos de una instalación eléctrica.
Variedad de opciones (trabajando con válvulas hidraulicas de 3 vias) de seleccionar diferentes diámetros. Posibilita tambien conectar sensores de temperatura, lluvia, presión etc.

Galcon-Conveniente, seguro y de costo efectivo.

galcon
Computerized Irrigation Control Systems

1 2040 EZ

english

- Watering time from 5 seconds to 12 hours.
- Watering cycle from once per minute to once every 14 days.
- The "window" start time can be pre-set.
- Operation and programming using only two selectors and a button.

spanish

- Tiempo de riego de 5 segundos a 12 horas.
- Arranques de riego desde una vez por minuto a una vez cada 14 días.
- El tiempo de inicio de la "Ventana" horaria puede ser preseleccionado.
- La operacion de programación se reactiva, usando solo dos selectores y un boton.

2 2321

english

- Flexible Watering time as required.
- Watering cycle from once per minute to once every 21 days.
- Simple operation using only one selector and a button.

spanish

- Tiempos de riego tan flexibles como se requieran.
- Arranques de riego desde una vez por minuto a una vez cada 21 días.
- Simple programación usando solo un selector y un boton.

3 3321

english

- Operation of up to 2 additional in-line valves (model 3313).
- Set a separate watering time for each valve.
- Watering cycle from once per minute to once every 21 days.

spanish

- Operación adicional de dos válvulas en linea, (3313).
- Seleccion de tiempo de riego independiente por cada válvula.
- Arranques de riego desde una vez por minuto a una vez cada 21 días.

Applications:

Professional and public gardens, agriculture and industry.
Can be integrated with existing hydraulic valves, and hydrometers.

Special applications for cowshed and chicken coop cooling, watering for rooting or sprouting, foggers, frost protection, filter flushing and other systems.

Aplicaciones:

Profesional y jardines públicos, agricultura e instalaciones industriales. Puede también acoplarse a válvulas hidraulicas existentes.

Aplicaciones especiales para granjas. Protección anticongelantes, filtros de limpieza y otros sistemas.

Technical Specification:

Diameter	3/4"	1"	11/2"	2"	3"	*
Maximum capacity (cubic metres/ hour)	9	10.5	35	40	50	
End connections	Threaded NPT BSP					
Standard	ISO NP 10 ANSI Class 125					
Body & Bonnet	Fiberglass Reinforced Nylon					
Spring	Stainless Steel SAE 302					
Diaphragm	Synthetic or Natural Rubber					
Gaskets	Buna N					
Pressure Range	0.7-10 bar					
Max. Temperature	80°C					
Batteries	Two 9V alkaline batteries					

* Option for 1/8" valve to control hydraulic values.

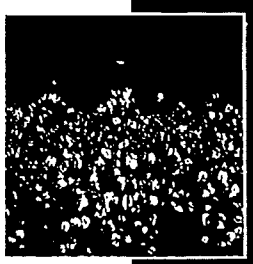

galcon
Computerized Irrigation Control Systems
Kfar Blum 12150 Israel
Tel. 972-6-948514, Fax. 972-6-948777

CE

GALCONIT 2010 EZ 2007 3007

Computerized controller for automatic watering.
Programador computarizado para riegos automáticos.

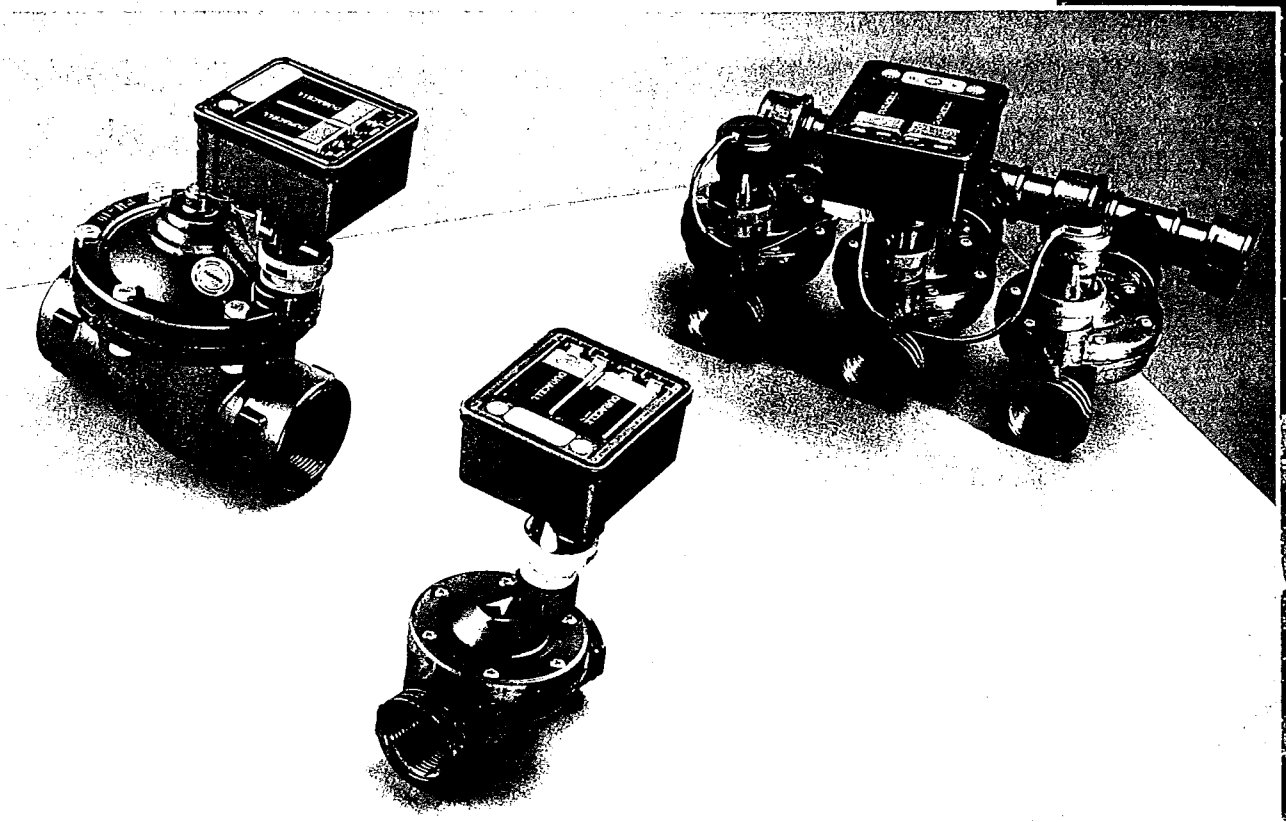

The Galconit controller is the ideal solution for the automatic operation of watering systems, without the need of electric cables in the garden or under paths.
Simple and easy programming using a button and selectors make installation fast and simple on all existing or new watering systems.
Operated by two batteries that need to be replaced only once a year.
Includes a two-way hydraulic valve from 3/4"-3" diameter.
A waterproof electronics and solenoid system. Can withstand any weather conditions.

Galcon assures years of trouble-free watering

El programador Galconit es el ideal. Aportando soluciones a los sistemas de riego automáticos. Sin necesidad de cables eléctricos ni por encima ni por debajo del jardín.
Simple y facil programación usando un boton y selectores, haciendo que la instalación sea mas rápida y simple que los ya existentes gracias a este nuevo sistema de riego.
Funcionamento mediante dos pilas que necesitan ser reemplazadas solo una vez al año.
Posibilidades (trabajando con válvulas de dos vias), seleccionar válvulas para sistemas de riego entre 3/4" a 3".
Solenoide y sistema electronico aislados al agua.

Galcon asegura muchos años de su sistema de riego.

1 2010 EZ

english

(blue)

- Watering time from 5 minutes to 12 hours.
- Watering cycle from once every 45 minutes to once every 14 days.
- The start time can be pre-set.

spanish

(azul)

- Tiempos de riego desde 5 minutos a 12 horas.
- Arranques de riego desde una vez cada 45 minutos a una vez cada 14 días.
- Preselección de la hora de inicio.

2 2007

english

(green)

- Flexible watering times as required.
- Watering cycle from once every 45 minutes to once every 21 days.
- Simple operation using only one selector and a button.

spanish

(verde)

- Tiempos de riego tan flexibles como se requieran.
- Arranques de riego desde una vez cada 45 minutos a una vez cada 21 días.
- Simple programación usando un solo selector y un boton.

3 3007

english

3-station (green)

- Operation of up to 2 additional valves (additional valve-Model 3713).
- Set a separate watering time for each valve.
- Watering cycle from once every 45 minutes to once every 21 days.

spanish

3 estaciones (verde)

- Para funcionamento a dos válvulas adicionales (válvula adicional mod. 3713)
- Selector de tiempos de riego independiente por cada válvula.
- Arranque de riego desde una vez cada 45 minutos a una vez cada 21 días.

Applications:

For installation inside buildings, roof gardens, flower planters and domestic greenhouses

Watering gardens, lawns, seasonal flowers and herb gardens.

Institutional and public gardens, median strips and ornamental areas.

Aplicaciones:

Para jardines interiores y exteriores de edificios, invernaderos, plantales y jardines privados residenciales.

Riego de jardines, césped, flores, plantas y rocallas.

Zonas comerciales y jardines publicos, isletas y medianas de carreteras y viales.

Technical Specification:

Diameter	3/4"	1"	1 1/2"	2"	3"
Maximum capacity (cubic metres/ hour)	9	10.5	35	40	50
End connections	Threaded NPT BSP				
Standard	ISO NP 10 ANSI Class 125				
Body & Bonnet	Fiberglass Reinforced Nylon				
Spring	Stainless Steel SAE 302				
Diaphragm	Synthetic or Natural Rubber				
Gaskets	Buna N				
Pressure Range	0.7-10 bar				
Max. Temperature	80°C				
Batteries	Two 9V alkaline batteries				

Computerized Irrigation Control Systems
Kfar Blum 12150 Israel
Tel. 972-6-948514, Fax. 972-6-948777

CE

Appendix 10: Peripheral devices for home gardening controlled irrigation systems - Irrigation Control Valves and Pressure Regulators

A few examples and technical details of irrigation controlled valves (ICV), manufactured in Israel, are given in this Appendix.

1. **Bermad, Evron, 200 series:** Plastic. Solenoid operated electric control. These valves range in size from 3/4" (which are the most useful size for home gardening) up to 2" which is more useful for public gardens or agriculture.
   Features:
   These state-of-the-art valves are corrosion resistant, cause very low head loss, operate over a wide range of pressures, have a self-cleaning orifice, water flow adjustment can be done manually, low electrical power consumption. Figures and technical data are given herein.

2. **Bermad, Evron 300 series:** Metal body, hydraulic/electric control valves. Size range: 1, 1.5", 2" and 3". Similar to series 200 but metal made body.

3. **Bermad, Evron PRV Series:** Direct Acting Pressure Reducing Valves. Designed for use where accurate and reliable control of line pressure is required regardless of fluctuations in supply pressure and/or flow rate. Model 0075-PRV with size of 3/4" is the most common in home gardening.
   Features:
   Uses a "rolling diaphragm" which separates the mechanism from the water flow (for long, trouble free, service), accurate performance, low friction, wide range of spring selection for downstream pressure setting.

4. **Netafim, AQUANET**: Electric hydraulic valve.
   This is a very low energy consuming valve. Has several important features:
   a. Low energy consumption, appears in AC and DC (battery operated) models.
   b. Clogging resistant
   c. Wide operation range: water flow from 25 L/h to 8 m^3/h, pressure from 2 m (0.2 bar) to 100 m (10 bar).

5. **Bermad, Evron, Direct Acting Pressure Reducing Valves (PRV Series):** These valves are designed for accurate and reliable watering control regardless of fluctuations in supply pressure and/or flow rate.
   Features:
   * A rolling diaphragm completely separates between the mechanism and the water flow.
   * Wide range of spring selection is available for different downstream pressure settings.
   * Two models are available: adjustable and fixed downstream preset pressure.

more details are given in the attached figures.

6. Pressure Regulators

In order to have accurate volume metering in controlled irrigation systems it is essential to overcome the problems of different and fluctuating pressures. This is done by pressure regulators, installed on relevant pipes. Details and features are given in the attached figure.

7. Pressure Indicators

Provide visual indication of water pressure in dripperlines. Without this device it is quite difficult to be sure if a dripperline is actually watering after it's valve was opened. Sometimes, line pressure failures may cause an irreversible damage before the failure is being detected. By using the pressure indicator device the "flag" gives an immediate visual indication of the water pressure in the line.
Description and features of the pressure indicator are given in the attached figure.

200 Series
PLASTIC HYDRAULIC / ELECTRIC CONTROL VALVES
For residential, commercial and agricultural irrigation systems

The **BERMAD 200 Series** plastic control valves range from 3/4" to 2" in size, in either globe or angle pattern. These control valves provide superior hydraulic performance, constituting as they do, the state-of-the-art in hydraulics and in plastic technology.

FEATURES

- Constructed of corrosion-resistant, high engineering plastics, synthetic rubber and stainless steel parts.
- Very high flow rate with very low head loss.
- Operation over a wide range of pressures.
- Smooth valve opening and closing prevents pressure surge hazards.
- Self-cleaning orifice on electric models provides reliable valve operation, even with brackish water.
- Flow control handle for water flow adjustment.
- Manual solenoid override fo opening valves in case of power failure without external water spill.
- High performance solenoid with low electrical power consumption.
- Wide range of models of electric and pressure regulating control valves.

'ECHNICAL DATA

Specifications

Valve Pattern: globe, angle or Y Pattern (1" only)

- **Sizes:** 3/4", 1", 1½", 2"

End connections: female threading, NPT/BSPT

Pressure Rating:
ISO: PN 10
ANSI: Class 125

- **Operating Pressure Range:** 0.7—10 kg/cm² (10-150 psi)

Temperature Range: water up to 80°C (180°F)

- **Electrical Data:**

Standard:
Voltage: 24V AC (50-60Hz)
Current: holding 0.20A, inrush 0.40A

Optional Voltages: 6V DC, 12V DC, 24V DC, 12V AC, 24V AC

Materials:
Body and cover: Nylon, reinforced
Metal parts: Stainless steel
Diaphragm: Natural Rubber
Seals: Buna-N and NR

Dimensions and Weights

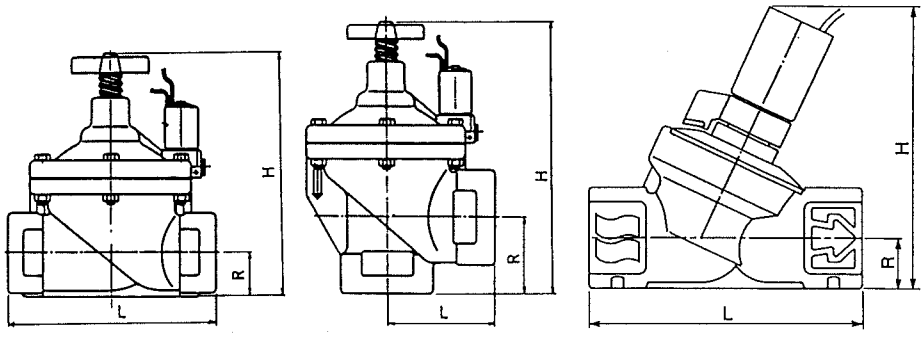

	Globe Pattern				Angle Pattern		Y Pattern
Size	3/4"	1"	1½"	2"	1½"	2"	1"
L (mm)	110	110	160	170	80	85	114
H (mm)	115	115	180	190	190	210	115
R (mm)	22	22	35	38	40	60	21
Width (mm)	78	78	125	125	125	125	68
Weight (kg)	0.35	0.33	1.0	1.1	0.95	0.91	0.30

Regulation Range

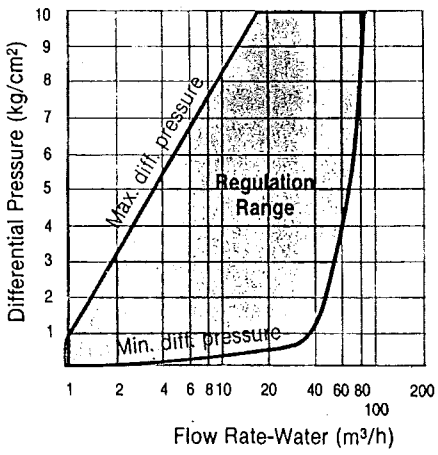

1½" and 2" sizes only

Flow Chart

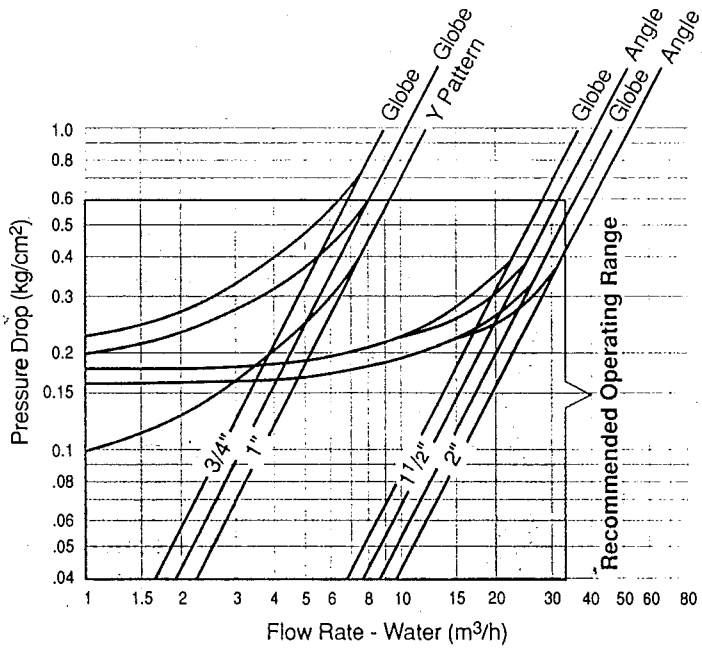

Straight lines – fully open valve
Curved lines – electric valve (2-way)

ELECTRIC VALVE ASSEMBLY

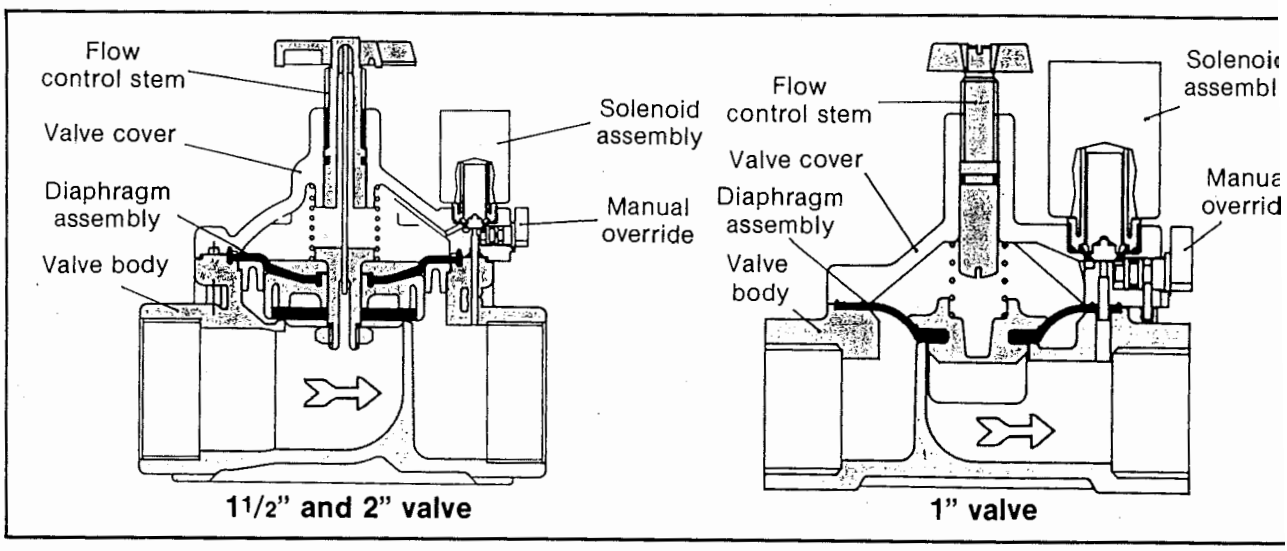

AVAILABLE MODELS

Model 205
Hydraulic Control Valve
Model 205 is a hydraulically operated control valve, requiring a pressure command to close.

Model 210
Electric Control Valve
Model 210 has a 2-way solenoid pilot valve with manual override. The valve is N.C. (normally closed), requiring electrical energy to open.

Model 220 (1½" and 2" only)
Pressure Reducing Control Valve
Model 220 reduces high upstream pressure to lower set downstream pressure.

Model 220-55 (1½" and 2" only)
Pressure Reducing and Electric Control Valve
Model 220-55 combines Model 220 with electric remote control.

CONTROL VALVES BERMAD

300 Series
METAL BODY HYDRAULIC / ELECTRIC CONTROL VALVES
For agriculture, turf and waterworks

The **BERMAD 300 Series** Y-pattern, diaphragm-actuated control valves are available in 1½", 2" and 3" sizes.
This control valve provides high flow capacity with versatile and accurate double-chambered actuator.
The valve can be operated in three options:

- Hydraulic or electric On/Off remote control valve.
- Pressure reducing or pressure sustaining/relief control valve.
- Combination of the two first options.

FEATURES

- Y-pattern body, which provides high flow with low head losses.
- Hydraulically operated by double-chambered diaphragm actuator, which provides high versatility of applications and a cushioned, no-slam closure.
- Low sensitivity to dirt.
- On/Off operation as well as throttling operation.
- Capable of operating at very low pressure with standard diaphragm, due to its double-chambered actuator.
- Convertible into one of a wide range of pressure regulators: pressure reducing, pressure sustaining/relief control valves.
- All pressure regulators are available as combinations of various regulation functions, remote control, etc.
- Can be installed in any position.

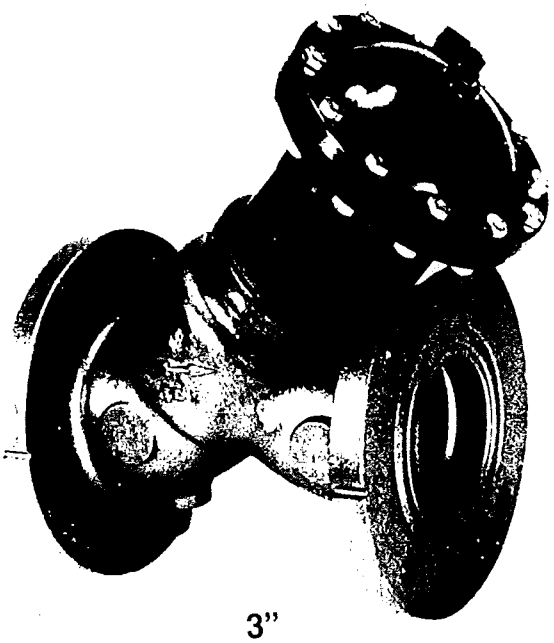

3"

2"

TECHNICAL DATA

Specifications

- **Valve Configuration:**
  Y-pattern, angle
- **Sizes:**
  Y – Y-pattern: 1 1/2", 2", 3"
  A – Angle: 2"
- **End Connections:**
  – 1 1/2", 2": threaded NPT/BSP
  – 3": female threaded NPT/BS or flanged to ISO/BS-D/ANSI
- **Operating Pressure Range:**
  0.5-10 kg/cm^2 (7-150 psi)
- **Temperature Range:**
  Water up to 80° C (180°F)
- **Materials:**
  Body: (1 1/2" and 2") Brass, (3") , Polyester-coated Cast Iron
  Actuator: Plastic, Brass and Stainles Steel
  Diaphragm: Naylon-fabric, reinforced Natural Rubber
  Seals: Buna-N and NR

Pilot Valves and Control Accessories: refer to PC Series

Flow Chart

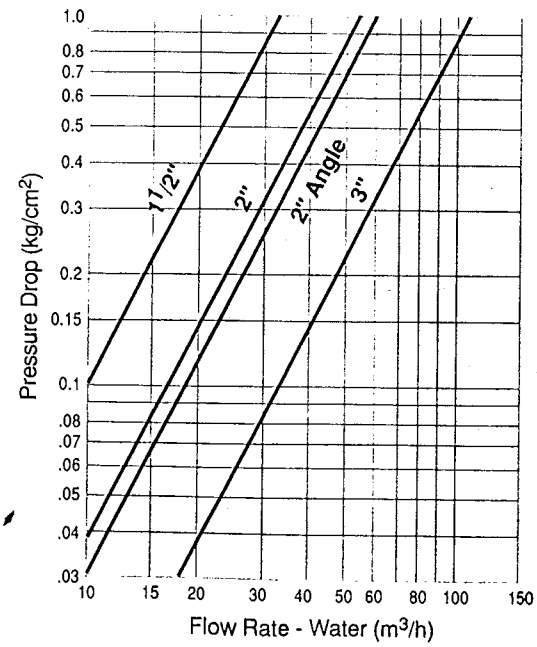

Dimensions and Weights

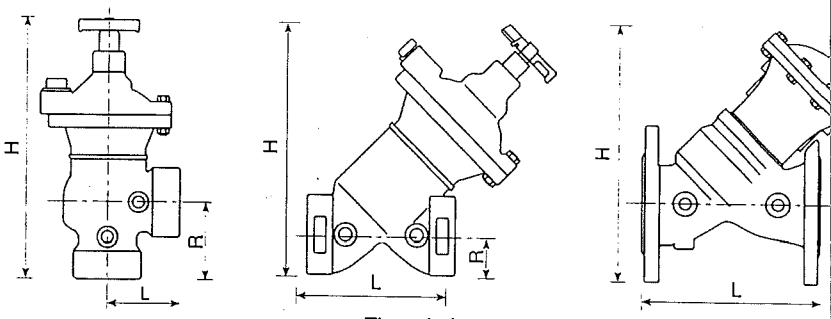

Threaded

Flanged

Size	1 1/2"	2"	2" Angle	3"	3"
L (mm)	112	124	71	210	235
H (mm)	175	215	.256	275	325
Width (mm)	105	125	135	160	200
R (mm)	30	40	75	58	98
Weight (kg)	1.25	2.0	2.25	7.4	14.7

TYPICAL APPLICATIONS

Model 300
Hydraulic Control Valve
Model 300 is a hydraulically operated control valve, requiring pressure command to close.

Model 310
Electric Control Valve
Model 310 has a 3-way solenoid pilot valve with manual override. The valve is N.C. (normally closed), requiring electrical energy to open.

Model 320
Pressure Reducing Control Valve
Model 320 reduces high upstream pressure to lower set downstream pressure.

Model 320-55
Pressure Reducing and Electric Control Valve
Model 320-55 combines Model 320 with electric remote control.

VALVE ASSEMBLY

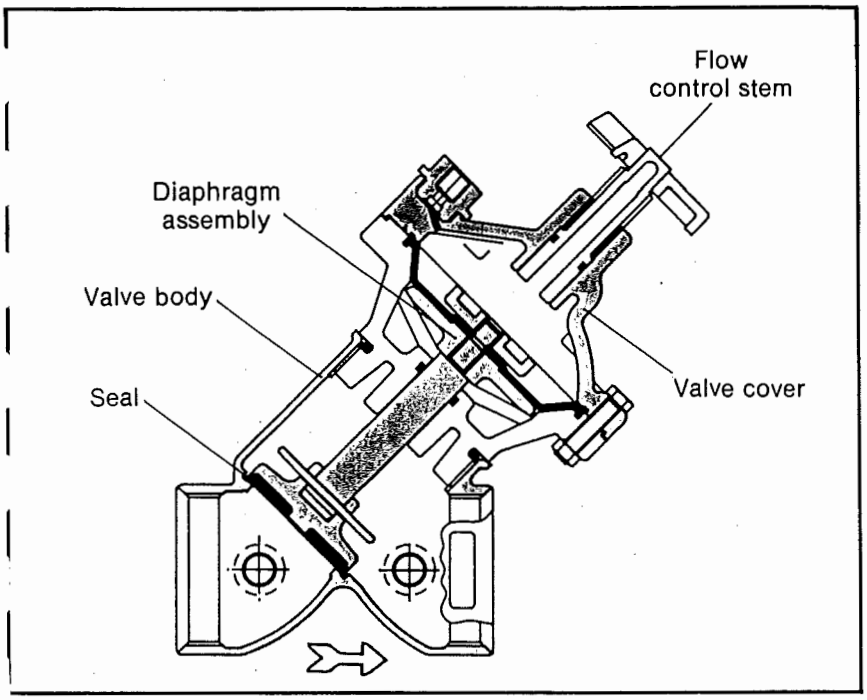

TYPICAL APPLICATIONS

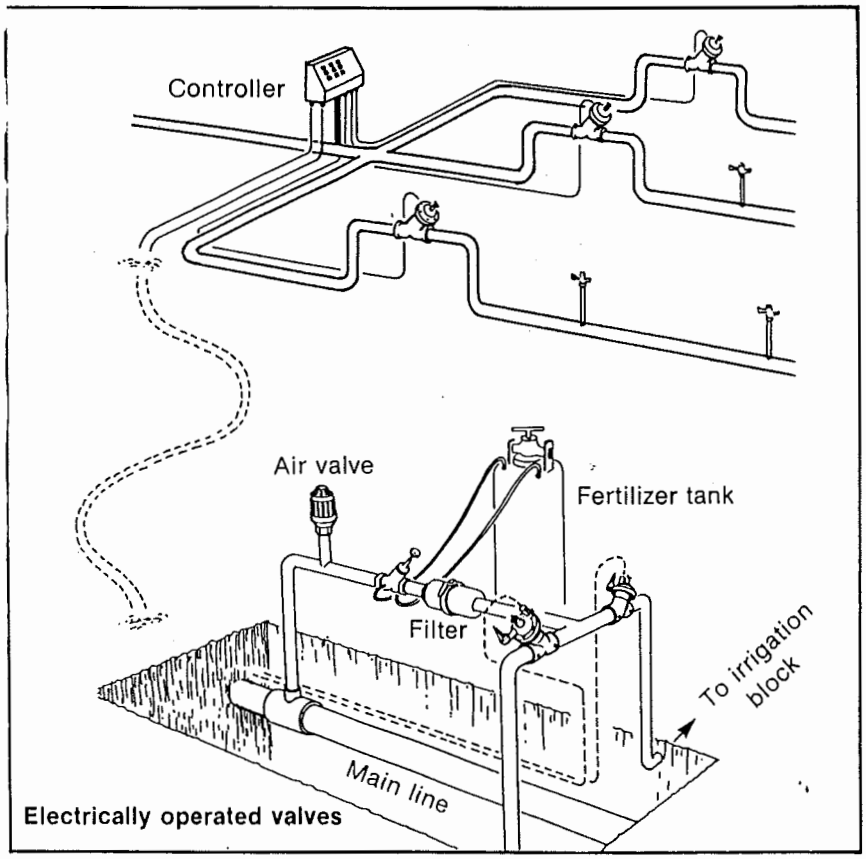

Electrically operated valves

Pressure Regulators

Multi-purpose use

Model	Minimum Flow Rate m³/h	Maximum Flow Rate m³/h
¾" Low Flow	0.25	1
¾" (1 spring)	0.8	5
1½"x2 (2 springs)	1.6	10
2"x4 (4 springs)	3.2	20
2"x6 (6 springs)	4.8	30
3"x10 (10 springs)	8	50

* Head loss at maximum flow rate is high, and depends on adequate inlet pressure (see Graph 2).
Any Outlet pressure from 6 to 45 m can be factory set.

Pressure Regulator Springs

Spring Color	Nominal Outlet Pressure M	PSI
Black	6	9
Purple	8.5	13
Blue	11	15
Stainless	14	20
Yellow	18	25
Red	25	35
White	30	43
Orange	35	50
Brown	40	57
Green	45	65

Graph 1: Springs

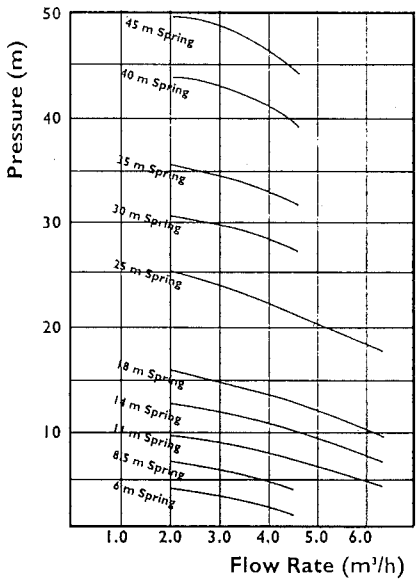

Graph 2: Pressure Regulators (head loss vs flow rate)

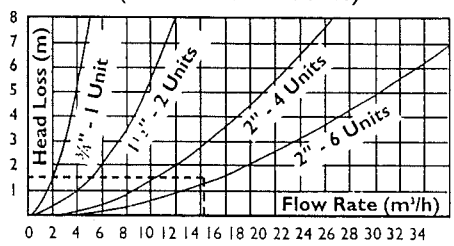

Graph 3: 3"x10 Pressure Regulators (head loss vs flow rate)

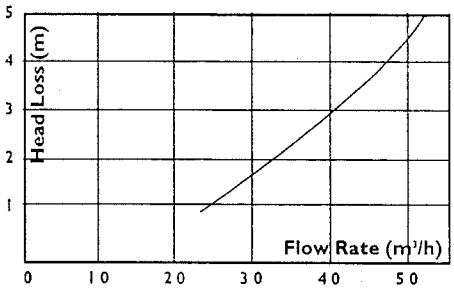

Example:

Given flow rate = 14 m³/h

Using Pressure Regulator model 2"x6 (6 springs) will result in 14 m³/h ÷ 6 springs = 2.4 m³/h per spring.

2.4 m³/h per spring will result in an output pressure of 14 m. (see Graph 1).

Head loss of Pressure Regulator 2"x6 14 m³/h is 1.4 m. (see Graph 2).

Design pressure at inlet of Pressure Regulator should be 14 + 1.4 + 2 = 17.4 m. (fixed head loss of 2 m. must be added when sizing Pressure Regulators: 2 m. + head loss + nominal regulation pressure = minimum input pressure).

IRRIGATION EQUIPMENT & DRIP SYSTEMS

Kibbutz Hatzerim – D.N. Negev 4, 85420 Israel.
Tel. 972 7 6473111 Fax 972 7 6420098 Telex 5207 NET IL
Kibbutz Magal – D.N. Hevel 33845 Israel
Tel. 972 6 6257222 Fax 972 6 6257212 Telex 471733 NET MG IL

Pressure Regulators

Multi-purpose use

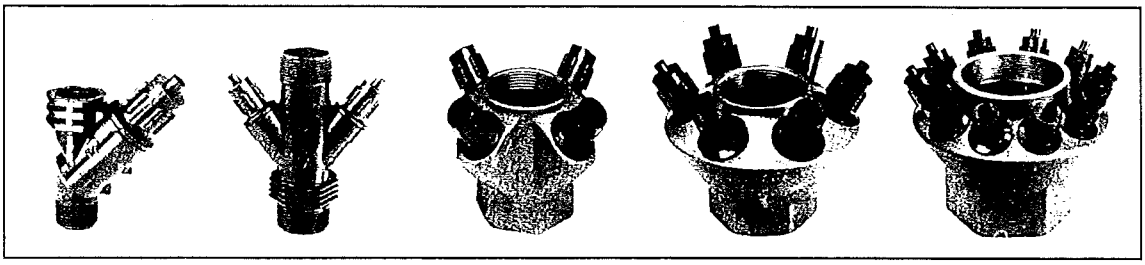

3/4" & 3/4" Low Flow | 1 1/2"x2 | 2"x4 | 2"x6 | 3"x10

Offer efficient solutions to many topographical problems.

Six models are available for use in drip, sprinkler and virtually any other type of irrigation system.

Simple design lends itself to long, trouble-free operation.

All internal parts are inter changeable with all Netafim pressure regulator models.

A built-in indicator shows when proper outlet pressure is achieved.

Manufactured from non-corrosive, high-quality plastic and brass materials.

Withstand all permitted fertilizers and chemicals in common use.

A negligible hysteresis effect to any inlet pressure variation.

Outlet pressure will remain constant regardless of income pressure.

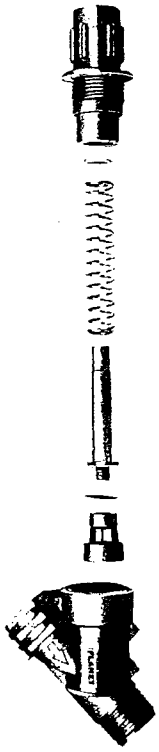

PRESSURE INDICATOR

Provides visual indication of water pressure in dripperlines

For all drip applications

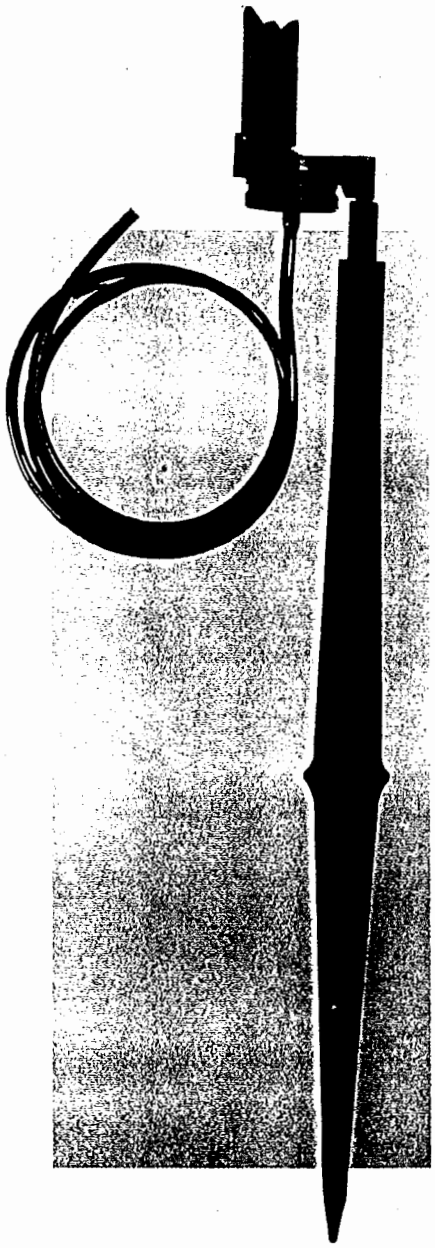

- Water pressure is indicated by a colored flag visible from distance.
- The only indicator enabling rapid, easy and simple control of dripperline pressure.
- Flag begins to rise at pressure of 0.3 Atm.
- Flag stabilizes at 90° at pressure of 0.7 Atm.
- Operating pressure : 2.5 Atm. maximum.

Installation:

- Insert 5 mm adapter into the dripperline.
- Drive the stake into the ground.

No need for maintenance, adjustment or measurement.

Complete "pressure indicator" includes:

Flag, body, micro tube (5 mm, 1.2 m) with adapter, plastic stake (33 cm).

NETAFIM
IRRIGATION EQUIPMENT & DRIP SYSTEMS

PRESSURE INDICATOR

Provides visual indication of water pressure in dripperlines

Operating Positions

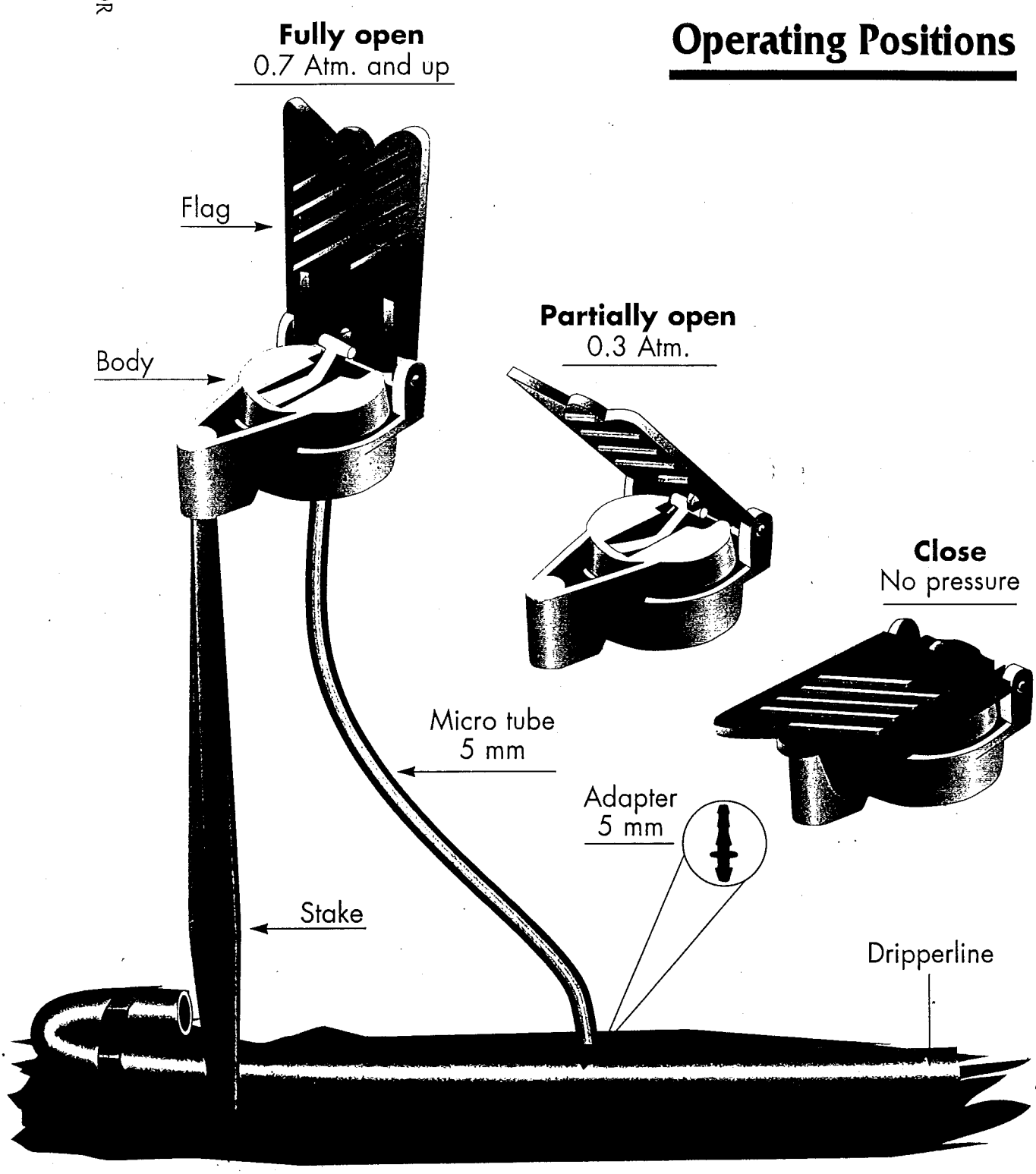

0696-Pr.In-Eng 1056

Kibbutz Hatzerim - D.N. Hanegev 4, 85420, Israel, Tel: 972 7 6473111, Fax: 972 7 6420098, Telex: 5207 NET IL
Kibbutz Magal - D.N. Hefer, 38845, Israel, Tel: 972 6287222, Fax: 972 6287210, Telex: 471733 NET MG IL
Kibbutz Yiftah - D.N. Merom Hagalil, 13840, Israel, Tel: 972 6 942761, Fax: 972 6 951221, Telex: 6727 YI NET IL

NETAFIM
IRRIGATION EQUIPMENT
& DRIP SYSTEMS