U.S. AGENCY FOR INTERNATIONAL DEVELOPMENT

U.S. Agency for International Development

- New Independent States Task Force / Energy, Environment & Technology
- Bureau of Research & Development / Office of Energy & Infrastructure

RUSSIA - Natural Gas and Natural Gas Liquids Flaring Reduction Environmental Project

Interim Feasibility Study

Prepared by
Energy Technology Innovation Project
Contract No. DHR-5741-Q-00-1062-00
Delivery Order No. 3
Prime Contractor: Bechtel Corporation

Appendices
Volume 2
July 1994

RUSSIAN – NATURAL GAS AND

NATURAL GAS LIQUIDS

FLARING REDUCTION ENVIRONMENTAL PROJECT

INTERIM FEASIBILITY STUDY

FINAL REPORT

APPENDICES

Volume 2

USAID

U.S. AGENCY FOR
INTERNATIONAL
DEVELOPMENT

JULY 1994

APPENDICES

The following information is included in these Appendices:

Volume 1

I ENVIRONMENTAL TERMS OF REFERENCE

II GIVEN DATA

SIBNIINP Reports
- Production Estimate Study (Russian and English)
- Condensate Production Estimates (Russian only)

NIPIGAS Reports
- Gas Resources Data Book 1 (Russian and English)
- Addendum to Book 1 (Russian and English)
- Gas Resources Data Book 2 (Russian and English)
- Addendum to Book 2 (Russian and English)

Volume 2

Gas Resources Data Book 3
- Characteristics of Facilities for Associated Gas Processing in Pur area of Tyumen Region and Prognosis of Prices (Russian and English)

GYPROTYMENNEFTEGAS Report (Russian and English)

III TRIP REPORTS
- Bechtel
- ETIP

IV AIDE MEMOIRE - THE WORLD BANK

V ECONOMIC AND FINANCIAL ANALYSIS PROFORMA
- Foreign Exchange Cash Flows of Case 1B.1
- Sensitivity Analysis to Case 1B.1
  - Summary Table and Individual Returns

GAS RESOURCES DATA-BOOK 3

(RUSSIAN VERSION)

1120

НАУЧНО-ИСЛЕДОВАТЕЛЬСКИЙ И ПРОЕКТНЫЙ ИНСТИТУТ ПО ПЕРЕРАБОТКЕ ГАЗА

НИПИГАЗПЕРЕРАБОТКА

Книга 3

ХАРАКТЕРИСТИКА ОБЪЕКТОВ ПО ПЕРЕРАБОТКЕ ПОПУТНОГО НЕФТЯНОГО ГАЗА В ПУРОВСКОМ РАЙОНЕ ТЮМЕНСКОЙ ОБЛАСТИ

ПРОГНОЗ ЦЕН

г. Краснодар, 1993

1121

СОДЕРЖАНИЕ

1. ХАРАКТЕРИСТИКА ОБЪЕКТОВ ПО ПЕРЕРАБОТКЕ ПОПУТНОГО НЕФТЯНОГО ГАЗА В ПУРОВСКОМ РАЙОНЕ ТЮМЕНСКОЙ ОБЛАСТИ 3

1.1. ГУБКИНСКИЙ ГПЗ I+II ОЧЕРЕДЬ 4
I. Подготовка территории строительства (I+II очередь) 4
II. Основные объекты строительства 5
III. Объекты подсобного и обслуживающего назначения 20
IV. Объекты энергетического хозяйства 23
V. Объекты транспортного хозяйства и связи 28
VI. Наружные сети и сооружения водоснабжения, канализации, теплоснабжения и газоснабжения 33

1.2. ГУБКИНСКИЙ ГПЗ III+IV ОЧЕРЕДЬ 39
I. Подготовка территории строительства 39
II. Основные объекты строительства 41
III. Объекты подсобного и обслуживающего назначения 48
IV. Объекты энергетического хозяйства 51
V. Объекты транспортного хозяйства и связи 53
VI. Наружные сети и сооружения водоснабжения, канализация, теплоснабжения и газоснабжения 55

1.3. ТАРАСОВСКИЙ ГПЗ 1 ОЧЕРЕДЬ 56
I. Подготовка территории 56
II. Основные объекты строительства. 57
III. Объекты вспомогательного назначения 63
IV. Объекты энергетического хозяйства 68
V. Объекты транспорта и связи 72
VI. Наружные сети и сооружения водоснабжения, канализации, теплоснабжения и газоснабжения 78

2. ПРОГНОЗ ЦЕН НА НЕФТЯНОЙ ГАЗ И ПРОДУКЦИЮ ГАЗОПЕРЕРАБАТЫВАЮЩИХ ЗАВОДОВ. НАЛОГИ 83
2.1. Общее положение 83
2.2. Прогноз цен на ШФЛУ 84
2.3. Прогноз цен на отбензиненный и сырой нефтяной газ 86
2.4. Налоги. 86
2.5. Выводы и предложения 88
2.6. Источники информации и исходные данные для работы. 89
2.7. Дополнительная информация 90

1122

1. ХАРАКТЕРИСТИКА ОБЪЕКТОВ ПО ПЕРЕРАБОТКЕ ПОПУТНОГО НЕФТЯНОГО ГАЗА В ПУРОВСКОМ РАЙОНЕ ТЮМЕНСКОЙ ОБЛАСТИ

1123

1124

1.1. ГУБКИНСКИЙ ГПЗ I+II ОЧЕРЕДЬ
I. Подготовка территории строительства (I+II очередь)

№ п/п	Наименование объекта	Техническая характеристика объекта	Ед. изм.	Количество	Год окончания строительства ---------- % освоения	Примечание
		Губкинский ГПЗ. 1 и 2 очереди строительства				
1.	Вырубка леса	Деревья хвойных и лиственных пород, высотой до 20м, диаметр ствола до 0.2м	штук	77500	1988 ---- 100%	
2.	Выторфовка заболоченных участков	Торф сильно разложившейся, избыточно увлажненный, глубина заложения торфа до 2.0м	м3	82500	--"--	
3.	Подсыпка площадки для отвода поверхностных вод	Грунт для подсыпки перемещается из грунтовых или из искуственных карьеров, выполненных способом гидронамыва, толщина подсыпки не привышает 2.0м, грунт укладывается в насыпь с послойным уплотнением	м3	550000	--"--	
4.	Внутренние автодороги	Поперечный профиль - с обочинами, ширина земляного полотна до 9.0м, ширина проезжей части до 6.0м	шт.	6200	--"--	Ж/б плиты размером 6х2х0.14м
		Конструкция дорожной одежды 2-х типов: с покрытием из сборных железобетонных плит в северном исполнении размерами 6х2х0.14м на основании из песчано-гравийной смеси и спокрытием серповидного профиля из песчано-гравийной смеси толщиной по оси 0.2м	м2	2500	--"--	площадь покрытия из песчано-гравийной смеси
5.	Пешеходные дорожки	Покрытие из сборных бетонных плит размером 0.5х0.5х0.07м	м2	750	--"--	
6.	Подъездная автодорога	Поперечный профиль - с обочинами, ширина земляного полотна 10.0м, ширина проезжей части 6.0м	км	14	--"--	Протяженность
		Покрытие из сборных железобетонных плит в северном исполнении размером 6х2х0.14м, основание из песчано-гравийной смеси, объем грунта земляного полотна на 1км до 25000м3	шт.	7500	--"--	Ж/б плиты размером 6х2х0.14м

1.1. ГУБКИНСКИЙ ГПЗ I+II ОЧЕРЕДЬ
II. Основные объекты строительства

№ п/п	Наименование объекта	Техническая характеристика объекта	Ед. изм.	Количество	Год окончания строительства / % освоения	Примечание
		I очередь. Q = 1.07млрд.м3/год				
1.	Площадка нефтеконденсатоотделителей	Нефтеконденсатоотделитель V = 237 м3	шт.	2	1988 / 100%	
		Емкость V = 100 м3	-"-	1		
		Вес оборудования	т	115		
2.	Здание компрессорной. Наружное оборудование и осушка	В здании: Компрессор двухступенчатый центробежный сырого нефтяного газа	шт.	3	1988 / 100%	
		Производительность	м3/мин	1250		
		Р всасывания	МПа	0.157		
		Р нагнетания	-"-	3.63		
		Мощность электродвигателя	кВт	12500		
		Компрессор винтовой газа регенерации	шт.	1		
		Производительность	м3/мин	18		
		Р всасывания	МПа	2.6		
		Р нагнетания	-"-	3.7		
		Мощность электродвигателя	кВт	800		
		Компрессор центробежный сухого отбензиненного газа	шт.	2		

1125

1126

№ п/п	Наименование объекта	Техническая характеристика объекта	Ед. изм.	Количество	Год окончания строительства ---------- % освоения	Примечание
		Производительность	м3 --- мин	1400-1800		
		Р всасывания	МПа	1.6		
		Р нагнетания	-"-	7.6		
		Мощность электродвигателя	кВт	12500		
		Суммарная установленная мощность компрессоров	-"-	63300		
		Суммарный вес компрессоров	т	519.55		
		Одноэтажное здание с пристройкой Размер компрессорной в плане 84.5х24.9 м Размер пристройки в плане 6.2х24.9 м Строительный объем - 33750 м3 Высота компрессорной - 15.6 м Высота пристройки - 5.8 м Площадь застройки - 2260 м2 Каркас - стальной Ограждающие конструкции - стеновые металлические трехслойные панели с минераловатным утеплителем				
		На наружной площадке сепараторы, емкости, аппараты воздушного охлаждения масла и газа, адсорберы осушки газа и конденсата, дренажные подземные емкости фильтры, узел приготовления и впрыска ингибитора коррозии печь газа регенерации мощность	МВт	5,28		
		В здании насосной: Насосы герметичные для СУГ, антифриза	шт	10		

№ п/п	Наименование объекта	Техническая характеристика объекта	Ед. изм.	Количество	Год окончания строительства ---------- % освоения	Примечание
		Одноэтажное здание: Размер в плане 18.4 м х 6.4 м Высота 6.5 м Строительный объем - 765 м3 Площадь застройки - 118.0 м2 Каркас - стальной Ограждающие кострукции - стеновые металлические трехслойные панели с минераловатным утеплителем				
		Суммарная установленная мощность электродвигателей насосов и аппаратов воздушного охлаждения	кВт	2769		
		Общий вес оборудования без компрессоров	т	1681.5		
3.	Факел	Сепаратор	шт.	4	1988 ---- 100%	
		Подземная емкость				
		Общий вес оборудования	т	62.6		
		Ствол	шт.	2		
		диаметр	м	1		
		высота	-"-	80		

1127

1178

№ п/п	Наименование объекта	Техническая характеристика объекта	Ед. изм.	Количество	Год окончания строительства ---------- % освоения	Примечание
4.	Центральное помещение управления N 1	Для питания низковольтных электроприемников УПГ N 1 запроектированы в электропомещении, сблокированном ЦПУ, три комплектных двухтрансформаторных подстанции напряжением 10/0.4 кВ Отдельностоящее здание размещено во взрывоопасной зоне (по ПУЭ-86) Здание двухэтажное обеспечено: - принудительной вентиляцией с 5-тикратным воздухообменом, - системой газового пожаротушения подпольного пространства ЦПУ Размеры в плане 30.8 х 24.8 м Высота здания 14.5 м Строительный объем - 11080 м3 Площадь застройки - 764.0 м2 Каркас здания - стальной Ограждающие конструкции - стеновые легкобетонные панели			1988 ---- 100%	

№ п/п	Наименование объекта	Техническая характеристика объекта	Ед. изм.	Количество	Год окончания строительства ---------- % освоения	Примечание
5.	Реагентное хозяйство	На наружной площадке емкости масла V=50 м3	шт.	5	1989 ---- 100%	
		емкости антифриза V=200 м3	-"-	2		
		блок разгазирования масла В здании маслорегенерационная установка	шт.	7		
		насосы шестеренчатые				
		Суммарная установленная мощность	кВт	28		
		Общий вес оборудования	т	43.041		
		Одноэтажное здание: Размеры в плане 30.4 x 6.4 м Высота 6.5 м Строительный объем - 1265.0м3 Площадь застройки - 200м2 Каркас - стальной Ограждающие конструкции - стеновые металлические трехслойные панели с минераловатным утеплителем				

1129

1130

№ п/п	Наименование объекта	Техническая характеристика объекта	Ед. изм.	Количество	Год окончания строительства ---------- % освоения	Примечание
6.	Здание азотно-кислородной станции	Производительность азота Р=20 МПа и 1.5 МПа чистотой О2 - 0.01%	м3 --- час	135	1988 ----- 100%	
		Производительность кислорода Р=20 МПа чистотой О2 - 99.7%	-"-	35		
		Компрессор поршневой воздушный	шт.	1		
		Мощность	кВт	75		
		Компрессор поршневой азотный	шт.	2		
		Мощность	кВт -"-	132 75		
		Общий вес компрессоров	т	13.255		
		Общий вес оборудования без компрессоров	-"-	17.449		
		Одноэтажное Размеры в плане 24.7 х 12.7 м Высота - 7.5 м Строительный объем - 2360 м3 Площадь застройки - 315 м2 Каркас - стальной Отраждающие конструкции - легкобетонные панели				
7.	Наружный двор азотно-кислородной станции	Хранение при Р=5.0 МПа Емкость V=125 м3	шт.	5	1988 ---- 100%	
		Емкость воды V=10 м3				
		Аппарат воздушного охлаждения	шт.	1		
		Насос	шт.	2		
		Общий вес оборудования	т	498.412		
		Суммарная установленная мощность	кВт	45		

№ п/п	Наименование объекта	Техническая характеристика объекта	Ед. изм.	Количество	Год окончания строительства ---------- % освоения	Примечание
8.	Тепломатериалопроводы - Участок N 1	Общая протяженность участка ТМП - 1933 м. Из них: 1. Двухярусная эстакада на высоких стойках с пролетными строениями. Ширина - 7.8 м. Длина 105 м. Длина пролета 105 м. 2. Двухярусная эстакада на высоких отдельностоящих стойках. Шириной 3.6 м. Длиной 235 м. 3. Одноярусная эстакада на отдельностоящих стойках высотой 1-6 м. Шириной 3.6 м. Длиной 262 м. 4. То же. Шириной 3 м. Длиной 150 м. 5. То же. Шириной 1.2 м. Длиной 56 м. 6. То же. Высотой до 6 м. Шириной 1.8 м. Длиной 1125 м. Стойки и пролетные строения металлические (по всей длине участка). Эстакада на 70% длины совмещена с электрокабелями и кабелями КиА. Общая металлоемкость участка (вес труб, деталей трубопроводов и трубопроводной арматуры без строительных конструкций и кабелей) составляет 797 т.			1988 ---- 100%	

1131

№ п/п	Наименование объекта	Техническая характеристика объекта	Ед. изм.	Количество	Год окончания строительства ---------- % освоения	Примечание
9.	- Участок N 2.	Общая протяженность участка ТМП - 1050 м. Из них: 1. Двухярусная эстакада на высоких стойках с пролетными строениями. Шириной 6 м. Длиной 246 м. Длина пролета 246 м. 2. Одноярусная эстакада с пролетными строениями на отдельностоящих стойках высотой от 1 до 6 м. Шириной 3 м. Длиной 95 м. Длина пролета 16.5 м. 3. То же. Шириной 2.4 м. Длиной 108 м. Длина пролета 45 м. 4. То же. Шириной 1.2 м. Длиной 274 м. Длина пролета 35 м. 5. Одноярусная эстакада на отдельностоящих стойках высотой до 1 м. Шириной 1.8 м. Длиной 25 м. 6. То же высотой от 1 до 6 м. Шириной 0.6 м. Длиной 302 м. Стойки и пролетные стоения металлические (по всей длине участка). Эстакада на 50% длины совмещена с электрокабелями и кабелями КиА. Общая металлоемкость участка (вес труб, деталей трубопроводов и трубопроводной арматуры без строительных конструкций и кабелей). Составляет 114.5 т.			1988 ---- 100%	

№ п/п	Наименование объекта	Техническая характеристика объекта	Ед. изм.	Количество	Год окончания строительства ---------- % освоения	Примечание
10.	- Участок N 3.	Общая протяженность участка ТМП - 1695 м. Из них: 1. Двухярусная эстакада на высоких стойках с пролетными строениями Шириной 6 м. Длиной 344 м. Длина пролета 344 м. 2. Одноярусная эстакада на отдельностоящих стойках высотой от 1 до 6 м с пролетными строениями. Шириной 4 м. Длиной 865 м. Длина пролета 27 м. 3. То же. Шириной 2.4 м. Длиной 350 м. Длина пролета 22.7 м. 4. То же. Шириной 1.2 м. Длиной 78 м. Длина пролета 15 м. 5. Одноярусная эстакада на отдельностоящих стойках высотой до 1 м. Шириной 0.6 м. Длиной 58 м. Стойки и пролетные строения металлические (по всей длине участка). Эстакада на 70% длины совмещена с электрокабелями и кабелями КиА. Общая металлоемкость участка (вес труб, деталей трубопроводов и трубопроводной арматуры без строительных конструкций и кабелей) составляет 292.8 т.			1988 ---- 100%	

1133

№ п/п	Наименование объекта	Техническая характеристика объекта	Ед. изм.	Количество	Год окончания строительства ---------- % освоения	Примечание
11.	Диспетчеризация Сети КиА.	Щитовая система на базе пневматических электронных приборов и электронных реле. Щиты - 12 шт. Кабели - 46333 м Аналоговые вх - 15 шт. Дискретные вх - 560 шт. Дискретные вых - 240 шт.			1988 ---- 100%	
II очередь. Q=1.07млрд.м3/год						
12.	Здание холодильной компрессорной N 1.	В здании компрессорной: турбокомпрессор пропановый двухступенчатый изотерма холодопроизводительность мощность электродвигателя вспомогательный пропановый компрессор мощность электродвигателя Общий вес компрессоров Суммарная установленная мощность электродвигателей компрессоров В пристройке насосной: насосы центробежные нефтяные и герметичные для СУГ Одноэтажное здание с пристройкой Размер компрессорный в плане 36.6x18.4 м Размер пристройки в плане 12.4x18.4 м Высота компрессорной 16,8 м Высота пристройки 5.4 м Строительный объем - 8560 м3 Площадь застройки - 900 м2	 шт оС кВт кВт шт кВт т кВт шт	 2 -38 6978 6300 1 75 132.3 12675 12	-- ---- 48%	

№ п/п	Наименование объекта	Техническая характеристика объекта	Ед. изм.	Количество	Год окончания строительства ---------- % освоения	Примечание
13.	НТК с турботетандером и наружное оборудование холодильной компрессорной N 1.	На наружной площадке: кожухотрубные и пластинчатые теплообменники емкости сепараторы подземные дренажные емкости аппараты воздушного охлаждения испарители колонны конденсаторы пропана ресиверы пропана детандер в блок-боксе Суммарная установленная мощность электродвигателей насосов и аппаратов воздушного охлаждения.	 шт кВт	 1 1204.15	-- ---- 48%	
14.	Здание холодильной компрессорной N 2.	АНАЛОГИЧНО ПУНКТУ 12			-- ---- 5%	
15.	НТК с турбодетандером и наружное оборудование холодильной компрессорной N 2.	АНАЛОГИЧНО ПУНКТУ 13			-- ---- 5%	

1135

№ п/п	Наименование объекта	Техническая характеристика объекта	Ед. изм.	Количество	Год окончания строительства ---------- % освоения	Примечание
16.	Здание компрессорной. Наружное оборудование и осушка.	В здании: компрессор двухступенчатый центробежный сырого нефтяного газа производительность Р всасывания Р нагнетания мощность электродвигателя компрессор винтовой газа регенерации производительность Р всасывания Р нагнетания мощность электродвигателя компрессор центробежный сухого отбензиненного газа производительность Р всасывания Р нагнетания мощность электродвигателя суммарная установленная мощность компрессоров общий вес компрессоров Здание компрессорной Одноэтажное здание с пристройкой Размер компрессорной в плане - 84.5х24.9 м Размер пристройки в плане 6.2х24.9 м Высота компрессорной - 15.6 м Высота пристройки - 5.8 м Строительный объем - 33750 м3 Площадь застройки - 2260 м2 На наружной площадке: сепараторы емкости аппараты воздушного охлаждения газа, масла, антифриза адсорберы осушки газа и конденсата дренажные подземные емкости фильтры узел приготовления и впрыска ингибитора коррозии печь газа регенерации мощностью В здании насосной: насосы герметичные для СУГ, антифриза Одноэтажное здание Размер в плане 18.6х6.6 м	шт м3/мин МПа -"- кВт шт м3/мин МПа -"- кВт шт м3/мин МПа -"- кВт кВт т МВт шт	2 1250 0.157 3.63 12500 1 18 2.6 3.7 800 1 1400 -1800 1.6 7.6 12500 38300 313.7 5.28 10	1989 ---- 100%	

№ п/п	Наименование объекта	Техническая характеристика объекта	Ед. изм.	Количество	Год окончания строительства ---------- % освоения	Примечание
		Высота 6.5 м Строительный объем - 800 м3 Площадь застройки - 122.76 м2 Каркас - стальной Ограждающие конструкции - стеновые металлические трехслойные панели с минераловатным утеплителем Суммарная установленная мощность насосов и аппаратов воздушного охлаждения общий вес оборудования без компрессоров	кВт т	2549 1215.317		
17.	ЦПУ N 2.	Отдельностоящее здание, размещено во взрывоопасной зоне (по ПУЭ-86). Здание двухэтажное обеспечено: - принудительной вентиляцией с 5-ти кратным воздухообменом - системой газового пожаротушения подпольного пространства ЦПУ. Размеры в плане 30.8х24.8 м Высота здания 14.5 м Строительный объем - 11080 м3 Площадь застройки - 674 м2 Каркас здания - стальной Ограждающие конструкции - стеновые легкобетонные панели.			1989 ---- 100%	
18.	Установка получения пропана.	Производительность На наружной площадке: колонны аппараты воздушного охлаждения испарители В здании: насосы нефтяные и герметичные Суммарная мощность насосов и аппаратов воздушного охлаждения Общий вес оборудования Одноэтажное здание: Размеры в плане 30.6х6.4 м Высота 5.0 м Строительный объем - 980 м3 Площадь застройки - 196 м2 Каркас - стальной Ограждающие конструкции - стеновые металлические трехслойные панели с минераловатным утеплителем	кг/час шт шт кВт т	1000 2 4 28 45.726	1989 ---- 100%	

1137

138

№ п/п	Наименование объекта	Техническая характеристика объекта	Ед. изм.	Количество	Год окончания строительства ---------- % освоения	Примечание
19.	Сети КиА.	Щитовые системы на базе пневматических и электронных приборов и электронных реле Щиты - 10 шт. Кабели - 19600 м Аналоговые вх - 15 шт. Дискретные вх - 320 шт. Дискретные вых - 180 шт.			1989 ---- 100%	
20.	ТМП. Участок N 4.	Общая протяженность участка ТМП - 560 м. Из них: 1. Двухярусная эстакада на отдельностоящих стойках Шириной 6 м. Высотой 6-9 м. Длиной 110 м. 2. Одноярусная эстакада на отдельностоящих стойках Высотой 1-6 м. Шириной 2.4 м. Длиной 345 м. 3. То же. Шириной 1.8 м. Длиной 105 м. Стойки (по всей длине участка) металлические. Эстакада на 50% длины совмещена с электрокабелями и кабелями КиА. Общая металлоемкость участка (вес труб, деталей трубопроводов и трубопроводной арматуры без строительных конструкций кабелей) составляет 330 т.			1989 ---- 100%	
21.	- Участок N 5.	Общая протяженность участка ТМП - 170 м. Представлен эстакадой из двухярусных стоек Высотой 6-9 м. Шириной 2.4 м. Длиной 170 м. Стойки (по всей длине участка) металлические. Эстакада на 70% длины совмещена с электрокабелями и кабелями КиА. Общая металлоемкость участка (вес труб, деталей трубопроводов, арматуры без строительных конструкций и кабелей) составляет 12 т.			--"--	

№ п/п	Наименование объекта	Техническая характеристика объекта	Ед. изм.	Количество	Год окончания строительства ---------- % освоения	Примечание
22.	- Участок N 6.	Общая протяженность участка ТМП - 615 м. Из них: 1. Двухярусная эстакада на высоких стойках с пролетными строениями Шириной 3 м. Длиной 65 м. Длина пролета 65 м. 2. Трехярусная эстакада высотой 1.6-9 м. Шириной 3 м. Длиной 205 м. 3. Одноярусная эстакада с пролетными строениями высотой от 1 до 6м. Шириной 6 м. Длиной 345 м. Длина пролета 60 м. Пролетные строения 60 м. Стойки (по всей длине участка) металлические. Эстакада на 50% длины совмещена с электрокабелями и кабелями КиА. Общая металлоемкость участка (вес труб, деталей трубопроводов и трубопроводной арматуры без строительных конструкций и кабелей) составляет 98т.			--"--	
23.	- Участок N 7.	Общая протяженность участка 80 м. Представлен одноярусной эстакадой с пролетным строением Ширина эстакады 3 м. Длина пролетного строения 12 м. Общий вес 9 т (без строительных конструкций).			--"--	
24.	- Участок N 8.	Протяженность участка 78 м. Отдельностоящие стойки высотой 1-8 м. Ширина эстакады 0.6 м. Общий вес - 0.9 т (без строительных конструкций).			--"--	
25.	- Участок N 9.	Протяженность участка 100 м. Стойки отдельностоящие высотой 1-5 м. Шириной 2.4 м. Общий вес - 0.91 т (без строительных конструкций).			--"--	

1139

1190

1.1. ГУБКИНСКИЙ ГПЗ I+II ОЧЕРЕДЬ
III. Объекты подсобного и обслуживающего назначения

№ п/п	Наименование объекта	Техническая характеристика объекта	Ед. изм.	Количество	Год окончания строительства ---------- % освоения	Примечание
		Губкинский ГПЗ. 1 и 2 очереди строительства				
1.	Административно-бытовой корпус на 180 чел.- (со столовой на 100 посадочных мест,работающей на сырье)	Пятиэтажное здание.Размеры в плане 60,06х15,6м. Высота здания 16,0м Площадь застройки 960м2 Строительный объем 15000м3 Полезная площадь 4000м2 Рабочая площадь 3600м2 Каркас-стальной;ограждающие конструкции-легкобетонные панели			1988 ---- 100%	
2.	Ремонтно-механическая мастерская (РММ)	Предназначена для выполнения технического обслуживания и текущего ремонта технологического оборудования ГПЗ. Представляет собой здание размерами 24,6х49,0м и высотой 7,0м. Строительный объем-8189м3. Площадь застройки-1203м2. Каркас-стальной. Ограждающие конструкции-стеновые металлические трехслойные панели с минераловатным уплотнителем. Оснащена 6-ю металлорежущими станками,балансировочным станком,сварочным и кузнечным оборудованием,а также вспомогательным и грузоподъемным (3 крана подвесных электрических, Q=5,0тс) оборудованием,необходимым для выполнения указанных выше ремонтов технологического оборудования ГПЗ. К зданию РММ примыкает бетонированная площадка наружных работ размерами 49х25м.			--"--	
3.	Склад ПВЖ	Одноэтажное здание.Размеры в плане 18,8х6,6м. Высота-4,5м Строительный объем-560м3 Площадь застройки-125м2 Каркас-стальной. Ограждающие конструкции-легкобетонные.			--"--	
4.	Навес для баллонов	Одноэтажное сооружение. Размер в плане-4,0х2,0м Высота-2,1м Строительный объем-16,8м3 Площадь застройки-8,0м2 Каркас-железобетонные стойки-сваи Ограждающие конструкции-асбоцементные листы волнистого профиля.			1988 ---- 100%	

№ п/п	Наименование объекта	Техническая характеристика объекта	Ед. изм.	Количество	Год окончания строительства ---------- % освоения	Примечание
5.	Склад метанола	Емкость V=25м3 Насос Установленная мощность Общий вес оборудования	шт шт квт т	2 1 22 4.137	--"--	
6.	Склад грузов длительного хранения (складская площадь 400м2)	Заглубленные сооружения Размеры в плане 24,6х19,4м Высота-4,0м Строительный объем-1908м3 Площадь застройки-500м2 Конструкции-монолитный железобетон.			--"--	
7.	Склад этиленгликоля	Предназначен для хранения этиленгликоля в таре (бочки емкостью 200л каждая). Представляет собой здание арочного типа размерами 15,0х30,0-м и оснащен краном подвесным электрическим грузоподъемностью 3,2тс. Строительный объем-5300м3 Площадь застройки-450м2 Обшивка-кровельная,сталь по обрешетке Утеплитель-минераловатные плиты.			--"--	
8.	Воздушная компрессорная:	В здании: воздушный компрессор производительность давление нагнетания мощность электродвигателя Общий вес компрессоров Установка осушки воздуха,точка росы Установленная мощность Здание одноэтажное Размеры в плане-12,6х15,6м Высота-7,2м Строительный объем-1415м3 Площадь застройки-196,6м2 Каркас-стальной Ограждающие конструкции-стеновые металлические трехслойные панели с минераловатным утеплителем. На наружной площадке воздухосборник V=25м3 Общий вес оборудования без компрессоров	 шт м3/мин МПа квт т С квт шт т	 2 20 0,8 132 11,4 -70 43,5 7 32.335		

№ п/п	Наименование объекта	Техническая характеристика объекта	Ед. изм.	Количество	Год окончания строительства ---------- % освоения	Примечание
9.	Материальный склад. II очередь	Предназначен для хранения изделий и материалов для нужд эксплуатации и ремонта оборудования ГПЗ. Представляет собой здание арочного типа размерами 15,0х30,0-м и оснащен краном подвесным электрическим грузоподъемностью 3,2тс. Строительный объем-5300м3 Площадь застройки-450м2 Обшивка - кровельная сталь по обрешетке. Утеплитель - минераловатные плиты.			1988 ---- 100%	

1.1. ГУБКИНСКИЙ ГПЗ I И II ОЧЕРЕДЬ
IV. Объекты энергетического хозяйства

№ п/п	Наименование объекта	Техническая характеристика объекта	Ед. изм.	Количество	Год окончания строительства / % освоения	Примечание
		1 очередь				
1.	Внешнее электроснабжение	Подстанция с двумя трансформаторами 220/10кВ мощностью по 100МВА каждый с расщепленной обмоткой на стороне 10кВ. На стороне 220кВ предусмотрены масляные выключатели. Подстанция 220/10кВ подключается к шинам 220кВ подстанции 500/220/110кВ Тарко-Сале двумя воздушными линиями ВЛ-220кВ на металлических опорах. Длина воздушных линий-2.5км каждая. Предусмотрены следующие каналы связи: - высокочастотный канал связи между подстанцией 220/10кВ Губкинского ГПЗ и подстанцией Тарко-Сале; - один канал телемеханики между подстанцией Муравленковская и Тарко-Сале (рассотояние 130км); - три канала связи между подстанцией Муравленковская и Тарко-Сале.			1988 ---- 100%	

145

№ п/п	Наименование объекта	Техническая характеристика объекта	Ед. изм.	Количество	Год окончания строительства ---------- % освоения	Примечание
2.	ЗРУ-10кВ	Распределительное устройство 10кВ для I и II очереди Губкинского ГПЗ расположено в здании. Здание одноэтажное. Размеры в плане 72.6х12.6м Высота-6.5м Строительный объем-5946м3 Площадь застройки-914м2 Каркас стальной Ограждающие конструкции-стеновые легкобетонные панели. Комплектное распределительное устройство 10кВ состоит из 6 секций. Номинальный ток сборных шин 1-4 секций-3200А. Каждая из 4-х секций сборных шин РУ-10кВ присоединена к своей полуобмотке трансформаторов 220/10кВ (50МВА). 1-4 секции РУ-10кВ состоит из 59 шкафов, в том числе: - шкафы с выключателями (ток отключения 40кА)-30 шт - шкафы для подключения отходящих кабелей-8 шт - шкафы с трансформаторами напряжения-8 шт - шкафы с разъединителями-10 шт - шкафы с трансформаторами собственных нужд-2 шт - шкаф с низковольтной аппаратурой-1 шт От шин 10кВ 1-4 секций запитаны 8 синхронных двигателей мощностью по 12.5МВТ. Для пуска этих двигателей, в здании ЗРУ10кВ установлены 8 ре на ток 1000А с сопротивлением 0.56 Ом. 5-6 секции РУ-10кВ подключаются через токоограничивающие реакторы (ток 1600А, сопротивление 0.14 Ом) к 1 и 4 секциям сборных шин 10кВ. Номинальный ток сборных шин 5-6 секций составляет 1600А. 5-6 секции РУ состоят из 31 шкафа, в том числе: - шкафы с выключателями (ток отключения 31.5кА)-22 шт - шкаф с разъединителем-1 шт - шкафы с трансформаторами напряжения-4 шт - шкафы для подключения кабелей-4шт. К шинам 10кВ 5-6 секций подключаются 4 синхронных двигателя мощностью по 6.3МВт, 2 асинхронных двигателя по 800кВт, трансформаторные подстанции 10/0.4кВ. РУ-10кВ укомплектовано двумя комплектами для компенсации емкостных токов. В ЗРУ предусмотрены щит постоянного тока, состоящий из трех панелей и щит релейный, состоящий из 4-х панелей. В ЗРУ размещена аккумуляторная батарея 220В с одночасовой емкостью 296 ампер-часов. Аккумуляторная батарея укомплектована двумя зарядно-подзарядными устройствами. Предусмотрена также, информационно-измерительная система контроля электроэнергии.			--"--	

№ п/п	Наименование объекта	Техническая характеристика объекта	Ед. изм.	Количество	Год окончания строительства ---------- % освоения	Примечание
3.	Наружные сети электроснабжения	Для электроснабжения потребителей 0.4кВ вспомогательной зоны Губкинского ГПЗ предусмотрены 7 трансформаторных подстанций 10/0.4кВ: 4 ТП в составе: - 2 трансформатора 10/0.4кВ мощностью 1000кВА с масляным заполнением; - 2 шкафа ввода 10кВ с предохранителем и разъединителем; - 2 шкафа ввода 0.4кВ от силовых трансформаторов с автоматическим выключателем, трансформаторами тока, амперметром, вольтметром, сигнализацией; - 1 шкаф 0.4кВ с секционным выключателем; - 2 шкафа с 7 фидерными автоматическими выключателями; на каждом фидере трансформатор тока и амперметр. 5 ТП в блок-боксе размером 9х6м в составе: - 2 трансформатора 10/0.4кВ мощностью по 1000КВА с масяным заполнением; - 2 шкафа ввода 10кВ с предохранителем и разъединителем; - 2 шкафа ввода 0.4кВ от силовых трансформаторов с автоматическим выключателем, трансформаторами тока, амперметром, вольтметром, сигнализацией; - 1 шкаф 0.4кВ с секционным автоматическим выключателем и 20 фидерными автоматическими выключателями; на каждом фидере трансформатор тока и амперметр; - установка конденсаторная, 380В, мощностью 300кВАр, регулируемая - 2шт; - пункт распределительный 380В, с 4 фидерными автоматическими выключателями - 2шт. 6 ТП в блок-боксе размером 9х3м в составе: - 2 трансформатора 10/0.4кВ мощностью по 250КВА с масляным заполнением; - 2 шкафа ввода 10кВ с предохранителем и разъединителем; - 2 шкафа ввода 0.4кВ с автоматическим выключателем, трансформаторами тока, амперметром, вольтметром, сигнализацией; - 1 шкаф 0.4кВ с секционным выключателем и 12 фидерными автоматическими выключателями; на каждом фидере трансформатор тока и амперметр; - Установка конденсаторная 38-В, мощностью 100кВАр, регулируемая - 2шт. 7 ТП в блок-боксе размером 9х6м с 2-мя трансформаторами 10/0.4кВ мощностью по 630кВА. Остальное электрооборудование - аналогично 5 ТП.			--"--	

№ п/п	Наименование объекта	Техническая характеристика объекта	Ед. изм.	Количество	Год окончания строительства ---------- % освоения	Примечание
		8 ТП, 9 ТП наружной установки, каждая в составе: - 1 трансформатор 10/0.4кВ, мощностью 160КВА; - разъединитель 10кВ;- шкаф 0.4кВ с 4 автоматическими выключателями. 10 ТП с 2-мя трансформаторами 10/0.4кВ, мощностью по 630КВА. Остальное электрооборудование аналогично 3ТП. Для аварийного электроснабжения в блок-боксе размером 12.5х3м применена дизельная электростанция в составе: - дизель-электрический автоматизированный агрегат мощностью 630КВТ, напряжением 0.4кВ с радиаторной системой охлаждения; - щит распределительный с 2 автоматическими выключателями на ток 600А; - щит распределительный с 8 автоматическими выключателями на ток 16А. Кабельные сети 10 и 0.4кВ по площадке I и II очередей завода прокладываются по кабельным конструкциям на эстакадах и в кабельных траншеях. Кабельная продукция: - кабели силовые 10кВ - 16.3км; - кабели силовые до 1кВ - 33.5км; - кабели контрольные - 21.5км. Для наружного освещения предусмотрены 4 прожекторных мачты, на каждой из которых установлено по 1 осветительному устройству с ксеноновой лампой мощностью 20кВт и 8 прожекторов с лампой накаливания 1000Вт. Во всех зданиях и на наружных установках выполнено освещение, заземление (зануление) и молниезащита.				

№ п/п	Наименование объекта	Техническая характеристика объекта	Ед. изм.	Количество	Год окончания строительства ---------- % освоения	Примечание
4.	Наружные сети электроснабжения II очередь	Кабели 10 и 0.4кВ прокладываются по кабельным конструкциям на эстакадах. Кабельная продукция: - кабели силовые 10кВ - 9.3км - кабели силовые 0.4кВ - 9.7км - кабели контрольные - 10км. Для наружного освещения предусмотрены 2 прожекторные мачты, на каждой из которых установлено по 1 осветительному устройству с ксеноновой лампой мощностью 20кВт и 8 прожекторов с лампой накаливания 1000Вт. Во всех зданиях и на наружных установках выполнено освещение, заземление (зануление) и молниезащита. Комплектная трансформаторная подстанция N 1 (N 2; N 3) каждая в составе: - два трансформатора мощностью по 1000кВА, напряжением 10/0.4кВ, с масляным заполнением; - два шкафа ввода высокого напряжения с предохранителем и разъединителем; - два шкафа ввода низкого напряжения с автоматическим выключателем, с трансформаторами тока, амперметром, вольтметром, сигнализацией; - один шкаф 0.4кВ с секционным автоматическим выключателем и двумя фидерными выключателями; - два шкафа 0.4кВ каждый с 6 фидерными выключателями; на всех низковольтных фидерах предусмотрены трансформаторы тока, амперметры. Щиты станций управления в количестве - 20шт всего панелей - 121шт. Конденсаторные установки напряжением 0.4кВ в количестве - 8шт общей мощностью 2160кВАр. Электрооборудование: - пункт распределительный на 10 автоматических выключателей - 5шт; - щиток осветительный на 12 групп с автоматами - 2шт. Прокладка кабелей по площадке установки предусматривается на эстакадах электрических и совмещенных с технологическими, в электропомещении в ЦПУ в кабельных каналах, в операторной - в двойном полу. Кабельная продукция: - кабель силовой до 1кВ - 35.0км - кабель контрольный - 20.0км - провод 0.66кВ - 3.0км - провод медный голый гибкий для заземления - 50кг.				учтены кабели для питания электроприемников 0.4кВ УПГ N 1

1148

1.1. ГУБКИНСКИЙ ГПЗ I+II ОЧЕРЕДЬ
V. Объекты транспортного хозяйства и связи

№ п/п	Наименование объекта	Техническая характеристика объекта	Ед. изм.	Количество	Год окончания строительства / % освоения	Примечание
		Губкинский ГПЗ. 1 очередь строительства				
1.	Здание гаража	Предназначено для выполнения технического обслуживания и текущего ремонта автомобилей. Состоит из закрытой стоянки на 5 автомобилей, профилактория на 2 поста, отделения ремонта и зарядки аккумуляторов, закрытой мойки автомобилей, бытовых помещений. Представляет собой одноэтажное здание размеры в плане 73.0х12.8м Высота - 4.5м Строительный объем - 4204м Площадь застройки - 934м2 Каркас - стальной Ограждающие конструкции - стеновые металлические трехслойные панели с минераловатным утеплителем. Оснащено необходимым оборудованием для выполнения указанных выше ремонтов.			1988 ---- 100%	
2.	Стоянка с воздухоподогревом	Предназначена для облегчения запуска двигателей автомобилей в зимнее время года. Состоит из открытой бетонированной площадки размерами 12х54м для стоянки 15 автомобилей, калориферной камеры и воздуховода, от которого горячий воздух подается под двигатели автомобилей.			--"--	
3.	Теплый склад	Предназначен для теплого хранения оборудования, поступающего от заводов-изготовителей. Представляет собой здание арочного типа размерами 15х60м, оснащенного двумя кранами подвесными электическими грузоподъемностью 3.2тс. Строительный объем - 10600м3 Площадь застройки - 900м2 Обшивка - кровельная сталь по обрешетке Утеплитель - минераловатные плиты.			--"--	
4.	Холодный склад	Предназначен для закрытого хранения оборудования, поступающего от заводов-изготовителей и не требующего теплого хранения. Представляет собой здание арочного типа размерами 15х60м, оснащенного двумя кранами электрическими подвесными грузоподъемностью 3.2тс. Строительный объем - 10600м3 Площадь застройки - 900м2 Обшивка кровельная сталь по обрешетке Утеплитель - минераловатные плиты.			--"--	

№ п/п	Наименование объекта	Техническая характеристика объекта	Ед. изм.	Количество	Год окончания строительства ---------- % освоения	Примечание
5.	Площадка оборудования	Предназначена для открытого хранения оборудования, поступающего от заводов-изготовителей. Представляет собой бетонированную площадку размерами 60х66м			--"--	
6.	Проходая	Блок-бокс-безкаркасный Размеры в плане 15.0х3.0м Высота 2.6м Площадь застройки - 45м2 Строительный объем - 117м3 Ограждающие конструкции - трехслойные панели металлические с минераловатным утеплителем.			--"--	
7.	Здание пождепо	Двухэтажное здание Размеры в плане 16.5х83.5м Строительный объем - 11450м3 Площадь застройки - 1377м2 Полезная площадь на 70 человек - 1300м2 Каркас - стальной Ограждающие конструкции - легкобетонные панели			--"--	
8.	Газодымная камера	Одноэтажное здание Размеры в плане 13.0х19.0м Высота - 3.6м Строительный объем - 890м3 Площадь застройки - 247м2 Каркас - стальной Ограждающие конструкции - легкобетонные панели			--"--	
9.	Ограждение	Длина - 500м Высота - 2.0м Конструкции - стальная сетка по железобетонным столбам			--"--	
10.	Внешняя связь	Система радиорелейной связи из двух оконечных станций на 24 канала в диапазоне 150-170МГц в комплекте с источниками электропитания, антенно-мачтовыми устройствами (высота мачты 45м), монтажными кабелями, измерительными приборами и инструментом.	компл.	1	--"--	

1149

№ п/п	Наименование объекта	Техническая характеристика объекта	Ед. изм.	Количество	Год окончания строительства ---------- % освоения	Примечание
11.	Автоматическая установка пожарной сигнализации	Прибор приемно-контрольный, охранно-пожарный для подключения 50 шлейфов сигнализации. Обеспечивает работу с пожарными извещателями автоматического действия, реагирующими на тепло, дым, пламя, и с ручными извещателями, срабатывающими при нажатии на кнопку. Обеспечивает возможность автоматического включения систем пожаротушения и отключение технологического оборудования и вентиляции по сигналу сработавшего пожарного извещателя. В шлейф возможно включение от 10 до 50 извещателей: - кабель телефонный 10х2 с медной жилой диаметром 0.5мм в поливинилхлоридной оболочке; - кабель контрольный с медными жилами сечением 1.5мм2 с изоляцией и оболочкой из поливинилхлоридного пластика, 4 жильный; - набор коробок для монтажа кабеля.	компл. км км компл.	1 8.0 5.0 1	--"--	

№ п/п	Наименование объекта	Техническая характеристика объекта	Ед. изм.	Количество	Год окончания строительства ---------- % освоения	Примечание
12.	Внутриплощадочные сети связи	-оборудование автоматической телефонной станции координатного типа емкостью 100 номеров с возможностью увеличения емкости до 300 номеров для подключения абонентов последующих очередей строительства, с телефонными аппаратами; - искробезопасная приставка для подключения 50-ти абонентов телефонной станции, находящихся во взрывоопасных зонах, в комплекте с источником электропитания на 24В; - электропитающая установка для питания оборудования АТСК в составе выпрямителей, блока автоматики, щитовых устройств и аккумуляторов; - оборудование радиотрансляционного узла мощностью 1кВт, включающего усилители, узлы коммутации, радиоприемник внешних программ, микрофонное оборудование, антенны для приема различных диапазонов; - кабель телефонный 10х2 с медной жилой диаметром 0.5мм в поливинилхлоридной оболочке; - кабели искробезопасной телефонной сети 10х2 с медной жилой диаметром 0.5мм в поливинилхлоридной оболочке; - кабель радиофикации и распорядительно-поисковой связи с 2-мя медными жилами диаметром 1.2мм экронированный бронированный стальной лентой; - кабель контрольный с 4 медными жилами сечением 1.5мм2 с изоляцией и оболочкой из поливинилхлоридного пластика; - часы электрические первичные кварцевые с возможностью подключения до 50 вторичных электрочасов, с электропитающей установкой; - устройство громкоговорящей связи для организации связи совещаний и диспетчерской громкоговорящей связи емкостью до 10 абонентов; - усилитель мощностью 100Вт для организации распорядительно-поисковой связи в комплекте с микрофонным устройством, рупорными громкоговорителями до 10 штук, устройством электропитания; - коммутатор оперативной связи диспетчера емкостью до 25 абонентов; - коммутатор оперативной связи руководителя с подключением до 60 абонентов; - коммутатор оперативной связи дежурного пождепо с подключением до 20 абонентов.	1комп 1комп 1комп 1комп 7.5км 1.5км 1.2км 3.0км 1комп 2комп 1комп 1комп 1комп 1комп		--"--	

№ п/п	Наименование объекта	Техническая характеристика объекта	Ед. изм.	Количество	Год окончания строительства ---------- % освоения	Примечание
		II очередь				
13.	Автоматическая установка пожарной сигнализации	Приемно-контрольный прибор охранно-пожарной сигнализации до 50 шлейфов. Кабель телефонный с медными жилами диаметром 0.5мм в поливинилхлоридной оболочке емкостью 10х2 Кабель контрольный с 4 медными жилами сечением 1.5мм2 с изоляцией и оболочкой из поливинилхлоридного пластика Кабель силовой общего назначения с медной жилой сечением 1мм2	комп км км км	1 9.65 1.8 0.5		
14.	Внутриплощадочные сети связи	Кабель телефонный с медными жилами диаметром 0.5мм в поливинилхлоридной оболочке емкостью 10 пар Кабель контрольный с медными жилами сечением 0.75мм2, количество жил до 4, с поливинилхлоридной изоляцией и оболочкой То же сечением жил 1.5мм2 Кабель радиофикации с 2-мя медными жилами диаметром 1.2мм экранированный бронированный стальной лентой Усилитель мощности 100Вт для организации распорядительно-поисковой связи в комплекте с микрофоном, рупорными громкоговорителями до 10 штук, устройством электропитания Кабель контрольный с 4 медными жилами сечением 1.5мм2 с поливинилхлоридной изоляцией и оболочкой	км км км км комп км	1.3 0.350 0.100 0.600 1 2.600	--"--	
15.	Ограждение площадки	Длина - 500м Высота - 2.0м Конструкции - стальная сетка по железобетонным столбам			--"--	

1.1. ГУБКИНСКИЙ ГПЗ I+II ОЧЕРЕДЬ

VI. Наружные сети и сооружения водоснабжения, канализации, теплоснабжения и газоснабжения

№ п/п	Наименование объекта	Техническая характеристика объекта	Ед. изм.	Количество	Год окончания строительства ---------- % освоения	Примечание
		1 очередь				
1.	Котельная	Блочная котельная с тремя паровыми газомазутными котлами. Полная паропроизводительность 48 тонн/час. Топливо - природный газ. Включает в себя: - производственное здание размером 12х36 м, высотой 8.4 м - блок-бокс бытовок размером 3.26х12.25 м, высотой 3.985 м - отделение нагрева теплоносителя - наружная площадка 9х14 м - блок мокрого хранения соли - две дымовые трубы диаметром 1000 мм высотой 32.11 м Блок-бокс бытовок соединяется с производственным зданием котельной переходом размером 3х3.26 м. Здание одноэтажное, блочное-безкаркасное. Ограждающие конструкции - металлические трехслойные панели с минераловатным утеплителем. Строительный объем - 4100м3 Площадь застройки - 542м2			1998 ---- 100%	
		Основное оборудование производственного здания:				
		- котел паровой производительностью 16 т/ч, Р=1.4 МПа	шт	3		
		- экономайзер чугунный блочный Fнагр.=330.4 м2	шт	3		
		- блок редукционной установки Q=60 т/ч, Р1/Р2=14/6	шт	1		
		- вентилятор Q=14650 куб.м/ч, Н=278 мм вод.ст., N=15 квт	шт	3		
		- дымосос Q=27650 куб.м/ч, Н=276 мм вод.ст., N=45 квт	шт	3		
		- питательный насос Q=38 куб.м/ч, Н=198 м, N=40 квт	шт	3		
		- деаэрационная колонка Q=50 т/ч	шт	2		
		- деаэрационный бак объемом 15 куб.м	шт	2		
		- сепаратор непрерывной продувки диаметром 300 мм	шт	1		
		- теплообменник Q=20-40 т/ч, Fнагр.=5 куб.м	шт	2		
		- насос центробежный Q=20 куб.м/ч, Н=18 м, N=2.2 квт	шт	2		
		- насос центробежный Q=38 куб.м/ч, Н=44 м, N=11 квт	шт	2		
		- фильтр ионитный диаметром 1500 мм	шт	4		
		- солерастворитель диаметром 1000 мм	шт	1		
		- насос дозировочный Q=100 л/ч, Н=100 м, N=0.25 квт	шт	1		
		Обоорудование отделения нагрева теплоносителя:				
		- подогреватель пароводяной Fнагр.=53.9 м2	шт	2		
		- подогреватель водоводяной Fнагр.=20.3 м2	шт	2		
		- насос центробежный Q=200 куб.м/ч, Н=95 м, N=80 квт	шт	3		

153

№ п/п	Наименование объекта	Техническая характеристика объекта	Ед. изм.	Количество	Год окончания строительства ---------- % освоения	Примечание
2.	Установка утилизации тепла компремированных газов (I оч.)	Предназначена для получения теплоносителя с параметрами 120-70 оС и с параметрами 150-100 оС. Расположена на наружной площадке компрессорной, насосное оборудование размещено в здании компрессорной. Основное оборудование: - насос центробежный Q=90 куб.м/ч, H=0.85 МПа, N=45 квт - насос центробежный Q=120 куб.м/ч, H=0.65 МПа, N=40 квт - емкость вертикальная объем 50 куб.м, P=1.0 МПа - теплообменник пароводяной Fнагр.=53 м2 - теплообменник водоводяной Fнагр.=56 м2 - теплообменник пластинчатый Fнагр.=648 м2, Ру=4.0 МПа - теплообменник кожухотрубчатый Fнагр.=778 м2, Ру=7.5 МПа	 шт шт шт шт шт шт шт	 3 2 2 1 1 4 2	1988 ---- 100%	
3.	Установка нагрева теплоносителя.	Предназначена для резервирования установки утилизации тепла компремированных газов. Наружная площадка размером 12.5x12.5 м Основное оборудование: - печь цилиндрическая трубчатая вертикальная производительность - 15.12 МВт	 шт	 1	проект	
		2 очередь				
4.	Установка утилизации тепла компримированного газа	АНАЛОГИЧНО N 2			1989 ---- 100%	
4а.	Установка нагрева теплоносителя	АНАЛОГИЧНО N 3			проект	
5.	Насосная хозпитьевого и производственного водоснабжения	Губкинский ГПЗ II, I очереди. Насосы: 1. Хозпитьевого назначения: производительность 90 м3/ч, напор 0.45 МПа. 2. Производственного назначения: производительность 90 м3/ч, напор 0.85 МПа. Блок-бокс заводского изготовления 12.7x3.2x4.0 (h) м. режим автоматический.	 шт шт	 3(2+1) 2(1+1)	1989 ---- 100%	
6.	Установка обезжелезивания воды	Производительность 400 м3/сут Блок-бокс заводского изготовления 15,22 x 3,2 x 4(h), режим автоматический	шт	1	--"--	

№ п/п	Наименование объекта	Техническая характеристика объекта	Ед. изм.	Количество	Год окончания строительства ---------- % освоения	Примечание
7.	Противопожарная насосная	Производительность 630 м3/ч, напор 0,9 МПа, 2 насоса (1+1). Два блок-бокса заводского изготовления 6 x 3,08 x 2,9 (h) каждый. Режим работы - автоматический	шт	1	--"--	
8.	Резервуары противопожарного запаса воды	Стальные, вертикальные с обогревом и теплоизоляцией V = 1000 м3 V = 200 м3	 шт шт	 2 2	--"--	
9.	Резервуары хозпитьевого запаса воды	То же V = 300 м3	шт	2	--"--	
10.	Водозабор из артскважины	1. Насосная производительностью 40 м3/ч, напор 0,75 МПа Блок-бокс заводского изготовления 2,95 x 2,95 x 2,86 (h) м Режим автоматический 2. Артскважина диаметр 426мм, глубина до забоя 152м	шт шт	7 7	--"--	
11.	КНС бытовых стоков	Производительность 16 м3/ч, напор 0.3 МПа, глубина подводящего коллектора 4.25 м. Блок-бокс заводского изготовления 3.23x3.22x2.83 (h) м - надземная часть; диаметр 1420 мм - подземная часть, H=6.5 м. Блок-контейнер вентиляции.	шт	7	--"--	
12.	Насосная станция солесодержащих стоков	То же Заглубленная часть сооружения конструкции - прямоугольные стельные блоки Размер в плане 0.9x1.15 м Глубина - 2.8 м	шт	1	--"--	
13.	Насосная счищенных стоков	А Н Л О Г И Ч Н О П. 11	шт	1	--"--	
14.	Очистные сооружения производственно-дождевых стоков	Состав: 1. Блок-бокс заводского изготовления 12x3,8x5 (h) м. Доочистка стоков, производительность 400 м3/сут. 2. Шламонакопители - земляные емкости - 2 карты, размер одной 10x15x1 (h) м. 3. Емкость уловленных нефтепродуктов, объемом 12.5 м3 с погружным насосом (1 шт) стальная, горизонтальная, подземная с теплоизоляцией. Производительность 40 м3/ч, напор 0.35 МПа 4. Дренажная емкость V=25 м3, аналогично п.3 5. Резервуар статического отстоя объемом 700 м3, стальной, вертикальный, надземный с обогревом, теплоизоляцией. 6. Резервуар-накопитель V=5000 м3, аналогично п.5	шт шт шт шт шт	1 1 1 3 2	--"--	
15.	Иловые площадки	Земляные емкости - 2 карты. Размер одной 15x15x1 (h) м.			--"--	

1155

№ п/п	Наименование объекта	Техническая характеристика объекта	Ед. изм.	Количество	Год окончания строительства ---------- % освоения	Примечание
16.	Насосная очищенных стоков	Производительность 120 м3/ч, напор 1,65 МПа, насосы 2 раб., 1 рез. Блок-бокс заводского изготовления 12х6х5.4 (h) м, режим - автоматический. Одноэтажное здание Размеры в плане 12.4х6,4 м Высота 4.2 м Строительный объем - 333 м3 Площадь застройки - 79 м2 Каркас - стальной Ограждающие конструкции - стеновые металлические трехслойные панели с минераловатным утеплителем.	шт	1	--"--	
17.	КНС производственно-дождевых стоков	Производительность 90 м3/ч, напор 0.5 МПа, 2 насоса (1+1) во взрывозащищенном исполнении. Вспомогательные насосы 2 (1+1) во взрывозащищенном исполнении. Производительность 7.2 м3/ч, напор 0.6 МПа. Три блок-бокса заводского изготовления: 1. щитовая 3х3х3 (h) 2. приемный резервуар надземная часть 3х3х3 (h) м подземная 3х3х6.64 (h) м. 3. машинный зал: подземная часть 3х3х6.64 (h) м надземная 3х3х3.5 (h) м. Заглубленная часть сооружения: Конструкции - прямоугольные стальные блоки Размер в плане 3.0х3.0 м Глубина - 6.5 м Надземная часть: Размер в плане 3.0х3.0 м Высота 3.0 м Конструкции - стальные трехслойные панели с минераловатным утеплителем.	шт	1	--"--	

№ п/п	Наименование объекта	Техническая характеристика объекта	Ед. изм.	Количество	Год окончания строительства ---------- % освоения	Примечание
18.	КНС производственно-дождевых стоков	Производительность 280-500 м3/ч, напор 0.46 МПа насосы основные 4 шт (3 + 1) вспомогательные 2 шт (1 + 1) во взрывозащищенном исполнении. КНС заводского изготовления в составе: 1. щитовая 12x3x3.8 (h) м 2. стальной булит подземный диаметром 3.4 м, длина 22.86 м, глубина подводящего коллектора 5 м. 3. КНС, надземная часть 12x3x3.8 (h) м, подземная 12x3x8.5 (h) м. Одноэтажное здание Размеры в плане 12.4x6.4 м Высота 4.2 м Строительный объем - 333 м3 Площадь застройки - 79 м2 Каркас - стальной Ограждающие конструкции - стеновые металлические трехслойные панели с минераловатным утеплителем.	шт	1	--"--	
19.	Внутриплощадочные сети производственно-противопожарного водопровода	Стальные трубы: диаметром 50 диаметром 80 диаметром 100 диаметром 150 диаметром 200 диаметром 250 диаметром 300 диаметром 350 диаметром 400 диаметром 500 Изоляция весьма усиленная. Глубина заложения труб 4.4 м. Наружное пожаротушение зданий из пожарных гидрантов, наружных технологических установок - из пожарных гидрантов и лафетных стволов (20 шт). Расход 170 л/сек. Металлоемкость колодцев II очереди 40 т. Грунты водонасыщенные, песок пылеватый. Применены: открытый водоотлив, крепление траншеи (частично).	 м м м м м м м м м м	 400 220 120 3000 600 2300 200 100 30 100	--"--	
20.	Внутриплощадочные сети хоз-питьевого водопровода	Трубы стальные, условия прокладки аналогичны п.19 диаметр 50 диаметр 80 диаметр 100 диаметр 150 диаметр 250 диаметр 300 диаметр 350 Металлоемкость колодцев 10 т по II очереди.	 м м м м м м м	 600 220 600 1000 90 150 300	--"--	

1157

1162

№ п/п	Наименование объекта	Техническая характеристика объекта	Ед. изм.	Количество	Год окончания строительства / % освоения	Примечание
21.	Внутриплощадочные сети производственно-дождевой канализации	Глубина прокладки от 3.6 до 5 м. Условия прокладки аналогичны сетям водопровода. Материал труб: - стальные в весьма усиленной изоляции диаметр 100 диаметр 200 диаметр 250 диаметр 300 диаметр 400 диаметр 500 диаметр 600 - чугунные напорные диаметр 100 диаметр 200 диаметр 250 диаметр 300 диаметр 400 Металлоемкость колодцев II очереди составляет 200 т.	 м м м м м м м м м м м м	 50 250 50 100 100 30 20 50 3200 600 1200 900	--"--	
22.	Внутриплощадочные сети бытовой канализации	Глубина от 3.6 до 5.5 м. Условия прокладки аналогичны сетям водопровода. Материал труб: - стальные в весьма усиленной изоляции диаметром 150 диаметром 200 диаметром 350 диаметром 400 - чугунные напорные диаметром 150 диаметром 200 Металлоемкость стальных колодцев II очереди	 м м м м м м т	 30 30 30 20 1300 500 5.0	--"--	
23.	Напорный коллектор очищенных стоков	Проложен в земле из стальных труб в весьма усиленной изоляции на глубине 2.5 м, в обсыпке высотой 2 м. Трубопровод частично проходит по болоту с глубиной заложения 4 м. диаметром 150	км	24.0	--"--	
24.	Станция биологической очистки бытовых стоков	Производительность 200 м3/сут . Полного заводского изготовления	шт	1	--"--	
25.	Блок резервуаров	Состав: 1. резервуары стальные, надземные V=10 м3 шт. 4, с обогревом, теплоизоляцией. 2. насос, производительность 10 м3/ч, напор 0.1 МПа (шт 1). Блок заводского изготовления 11.2х3.12х3.24(h)м			--"--	

1.2. ГУБКИНСКИЙ ГПЗ III+IV ОЧЕРЕДЬ
I. Подготовка территории строительства

№ п/п	Наименование объекта	Техническая характеристика объекта	Ед. изм.	Количество	Год окончания строительства ---------- % освоения	Примечание
		Губкинский ГПЗ. 3 очередь строительства				
1.	Вырубка леса	Деревья хвойных и лиственных пород, высотой до 20м, диаметр ствола до 0.2м	шт.	7800	1990 ---- 100%	
2.	Выторфовка заболоченных участков	Торф сильно разложившейся, избыточно увлажненный, глубина заложения торфа до 2.0м	м3	2700	--"--	
3.	Подсыпка площадки для отвода поверхностных вод	Грунт для подсыпки перемещается из грунтовых или искусственных карьеров, выполненных способом гидронамывания, толщина подсыпки не превышает 2.0м	м3	135000	--"--	
4.	Внутренние автодороги	Поперечный профиль — с обочинами, ширина земляного полотна до 9.0м, ширина проезжей части до 6.0м; конструкция дорожной одежды 2-х типов: с покрытием из сборных железобетонных плит в северном исполнении размерами 6х2х0.14м на основании из песчано-гравийной смеси и с покрытием серповидного профиля из песчано-гравийной смеси толщиной по оси 0.2м	шт. м2	1350 1300	проект	ж/б плиты размером 6х2х0.14м площадь покрытия из песч.грав. смеси
5.	Пешеходные дорожки	Покрытие из сборных бетонных плит размером 0.5х0.5х0.07м	м2	250	проект	
		Губкинский ГПЗ. 4-я очередь строительства				
6.	Вырубка леса	Деревья хвойных и лиственных пород, высотой до 20м, диаметр ствола до 0.2м	шт	1100	проект	
7.	Выторфовка заболоченных участков	Торф сильно разложившийся, избыточно увлажненный, глубина заложения торфа до 2.0м	м3	350	--"--	
8.	Подсыпка площадки для отвода поверхностных вод	Грунт для подсыпки перемещения из грунтовых или из искусственных карьеров, выполненных способом гадронамыва, толщина подсыпки не превышает 2.0м, грунт укладывается в насыпь с послойным уплотнением	м3	125000	--"--	

1160

№ п/п	Наименование объекта	Техническая характеристика объекта	Ед. изм.	Количество	Год окончания строительства ---------- % освоения	Примечание
9.	Внутренние автодороги	Поперечный профиль - с обочинами, ширина земляного полотна до 9.0м, ширина проезжей части до 6.0м, конструкция дорожной одежды 2-х типов: с покрытием из сборных ж/б плит в северном исполнении размерами 6х2х0.14м на основании из песчано-гравийной смеси и с покрытием серповидного профиля из песчаной смеси толщиной по оси 0.2м	шт м2	1200 1300	--"--	ж/б плиты размером 6х2х0.14 площадь покрытия из песчано-гравийной смеси
10.	Пешеходные дорожки	Покрытие из сборных бетонных плит размером 0.5х0.5х0.07м	м2	250	--"--	

1.2. ГУБКИНСКИЙ ГПЗ III+IV ОЧЕРЕДЬ
II. Основные объекты строительства

№ п/п	Наименование объекта	Техническая характеристика объекта	Ед. изм.	Количество	Год окончания строительства / % освоения	Примечание
		Губкинский ГПЗ. 3 очередь строительства				
1.	Установка нефтеконденсатоотделителей	Нефтеконденсатоотделитель V=237м3 вес оборудования	шт т	2 112	проект	
2.	Здание компрессорной. Наружное оборудование и осушка	Технология аналогична II очереди Строительная часть: Здание одноэтажное с пристройкой Размеры в плане машинного зала - 60.4x24.4м Размеры в плане пристройки - 9.4x24.4м Высота машинного зала - 15.4м Высота пристройки - 6.5м Строительный объем - 24000м3 Площадь застройки - 1700м2 Каркас - стальной Ограждающие конструкции - стеновые металлические трехслойные панели с минераловатным утеплителем			--"--	
3.	НТК с турбодетандером. Здание холодильной компрессорной	Технология аналогична II очереди Строительная часть: Одноэтажное здание с пристройкой Размер в плане компрессорной - 42.4x18.4м Размер в плане приятройки - 6.4x18.4м Высота: компрессорной - 10м пристройки - 5.5м Строительный объем - 8450м3 Площадь застройки - 898м2 Каркас- стальной Ограждающие конструкции - стеновые трехслойные металлические панели с минераловатным утеплителем			--"--	

1161

№ п/п	Наименование объекта	Техническая характеристика объекта	Ед. изм.	Количество	Год окончания строительства ---------- % освоения	Примечание
4.	ЦПУ N3	Отдельностоящее здание размещено во взрывоопасной зоне (по ПУЭ-86). Здание двухэтажное обеспечено: - принудительной вентиляцией с 5-ти кратным воздухообменом; - системой кондиционирования воздуха помещений с вычислительной техникой и помещений с постоянным пребыванием персонала (объем кондиционирования 2000м3); - системой газового пожаротушения воздушного и подпольного пространства помещения с оборудованием распределенной системы управления. Размеры в плане - 30.8х24.8м Высота здания - 12.5м Строительный объем - 9548м3 Площадь застройки - 764м2 Каркас - стальной Ограждающие конструкции - стеновые легкобетонные панели			--"--	

N° п/п	Наименование объекта	Техническая характеристика объекта	Ед. изм.	Количество	Год окончания строительства ---------- % освоения	Примечание
5.	ТМП. Участок N 10	Общая протяженность участка ТМП - 3615м Из них: 1. Двухярусная эстакада на высоких стойках с пролетными строениями шириной - 6м длиной - 540м длиной пролета - 510м 2. Двухярусная эстакада на высоких стойках с пролетными строениями шириной 8м длиной 66м длиной пролета 66м 3. Одноярусная эстакада на отдельностоящих стойках высотой от 2 до 5м ширина 6м длина 170м 4. То же ширина 4м длина 545м 5. То же ширина 3м длина 290м 6. То же ширина 2.4м длина 90м 7. То же ширина 1.2м длина 1685м 8. То же ширина 0.6м длина 295м Стойки и пролетные строения (по всей длине участка) металлические. Эстакада на 70% длины совмещена с электрокабелями и кабелями КиА. Общая металлоемкость участка (вес труб, деталей трубопроводой и трубопроводной арматуры без строительных конструкций и кабелей) составляет 1410т.			--"--	

1163

№ п/п	Наименование объекта	Техническая характеристика объекта	Ед. изм.	Количество	Год окончания строительства ---------- % освоения	Примечание
6.	ТМП. Участок N 11	Общая протяженность участка - 1415м 1. Двухярусная эстакада на высоких стойках с пролетными строениями шириной 2.4м длиной 815м длиной пролета 815м 2. Одноярусная эстакада высотой 3-9м шириной 2.4м длиной 194м 3. То же высотой 1.5-3м с пролетным строением шириной 1.8м длиной 80м длина пролетного строения 18м 4. Одноярусная на отдельностоящих стойках высотой 1-3м шириной 1.2м длиной 275м 5. То же высотой до 1м шириной 0.6м длиной 51м Стойки и пролетные строения (по всей длине участка) металлические. Эстакада на 50% длины совмещена с электрокабелями и кабелями КиА. Общая металлоемкость участка (вес труб, деталей трубопроводов и опорной арматуры без строительных конструкций кабелей) составляет 68.7т			--"--	
7.	Факельное хозяйство	Сепаратор низкого давления Сепаратор высокого давления Подземная емкость Емкость для конденсата Общий вес конденсата Общий вес оборудования Ствол факела высокого давления D=0.8м H=65м Ствол факела низкого давления D=1.0м H=100м	шт шт шт шт т	1 1 1 1 31.31	--"--	
7а.	Сети КиА Диспетчеризация	Щитовые системы на базе пневматических и электронных приборов и электронных реле. Щитов - 6 шт. Кабелей - 17500 м Аналоговые входы - 20 шт. Дискретные входы - 220 шт. Дискретные выходы - 140 шт.			--"--	

№ п/п	Наименование объекта	Техническая характеристика объекта	Ед. изм.	Количество	Год окончания строительства ---------- % освоения	Примечание
		4 очередь				
8.	Здание компрессорной. Наружное оборудование и осушка	Технология аналогична 1 очереди Здание компрессорной: Здание одноэтажное с пристройкой Размеры в плане: компрессорной - 84.6х24.6м пристройки - 9.6х24.4м Высота: компрессорной - 15.6м пристройки - 6.5м Строительный объем - 33985м3 Площадь застройки - 2315м2 Каркас - стальной Ограждающие конструкции - стеновые трехслойные металлические панели с минераловатным утеплителем Здание насосной Одноэтажное здание Размеры в плане 18.4х6.4м Высота - 6.5м Строительный объем - 765м3 Площадь застройки - 118м2 Каркас - стальной Ограждающие конструкции - стеновые трехслойные металлические панели с минераловатным утеплителем.			--"--	
9.	Отделение НТК с турбодетандером. Здание холодильной компрессорной	Технология аналогична 1 очереди Строительная часть Одноэтажное здание Размеры в плане 48.4х18.4м Высота - 10.5м Строительный объем - 9350м3 Площадь застройки - 890м2 Каркас - стальной Ограждающие конструкции - стеновые трехслойные металлические панели с минераловатным утеплителем.			--"--	

1165

№ п/п	Наименование объекта	Техническая характеристика объекта	Ед. изм.	Количество	Год окончания строительства ---------- % освоения	Примечание
10.	ЦПУ N 4	Отдельностоящее здание размещено во взрывоопасной зоне (по ПУЭ - 86). Здание двухэтажное, обеспечено: - принудительной вентиляцией с 5-ти кратным воздухообменом; - системой газового пожаротушения воздушного и подпольного пространства помещений с оборудованием системы управления; - системой кондиционирования воздуха помещений с вычислительной техникой и помещений с постоянным пребыванием персонала (объем кондиционирования 2000м3). Размеры в плане 30.8х24.8м Высота здания - 12.0м Строительный объем - 8088м3 Площадь застройки - 674м2 Каркас - стальной Ограждающие конструкции - стеновые легкобетонные панели.			--"--	
11.	ТМП. Участок N 12	Общая протяженность участка ТМП - 850м Из них: 1. Двухярусная эстакада на высоких стойках с пролетными строениями шириной 8м длиной 210м длина пролетного строения 55м 2. Одноярусная эстакада на отдельностоящих стойках высотой 1.5м шириной 6м длиной 45м 3. То же высотой 7м шириной 4м длиной 300м 4. То же высотой 3-5м шириной 3м длиной 70м 5. То же высотой 1.5м шириной 1.8м длиной 200м 6. То же шириной 0.6м длиной 25м Стойки и пролетные строения (по всей длине участка) металлические. Эстакада на 50% длины совмещена с электрокабелями и кабелями КиА. Общая металлоемкость участка (вес труб, деталей и запорной арматуры без строительных конструкций и кабелей) составляет 440т.			--"--	

№ п/п	Наименование объекта	Техническая характеристика объекта	Ед. изм.	Количество	Год окончания строительства ---------- % освоения	Примечание
12.	ТМП. Участок N 13	Общая протяженность участка 247м Представлен отдельностоящими стойками высотой до 8м шириной 2.4м общая длина 235м, длина пролетного строения - 12м Все стойки и пролетные строения - металлические. Общий вес (без веса строительных конструкций и кабелей) - 16.25т			--"--	
13.	Факельное хозяйство	Аналогично III очереди			--"--	
14.	Сети КиА Диспетчеризация	Щитовые системы на базе пневматических и электронных реле Щиты - 7 шт. Кабели - 20000 м Аналоговые вх. - 25 шт. Дискретные вх. - 200 шт. Дискретные вых. - 140 шт.			--"--	
15.	Реагентное хозяйство III очереди	Емкость V=50м3 для компрессорного масла шестеренчатый насос масла установленная мощность Общий вес	шт шт квт т	1 1 0.55 3.51 2	--"--	
16.	Промежуточные аварий-но-технологические резервуары	Емкости V=100м3 Факельный сепаратор Подземная дренажная емкость Насос ШФПУ Общий вес оборудования Установленная мощность эл.дв. насоса	шт шт шт шт т квт	6 1 1 1 154.- 165 90	--"--	

1169

1162

1.2. ГУБКИНСКИЙ ГПЗ III+IV ОЧЕРЕДЬ
III. Объекты подсобного и обслуживающего назначения

№ п/п	Наименование объекта	Техническая характеристика объекта	Ед. изм.	Количество	Год окончания строительства ---------- % освоения	Примечание
		Губкинский ГПЗ. 3 и 4 очереди строительства				
1.	Технический корпус полезной площади - 720м2 с буфетом на 36 посадочных мест	Двухэтажное здание Размеры в плане 31.0х13.0м Высота здания 6.7м Строительный объем - 2700м3 Площадь застройки - 403м2 Каркас - стальной Ограждающие конструкции - стеновые легкобетонные панели			-- ---- 15%	
2.	Электроремонтная мастерская	Предназначена для выполнения технического обслуживания и текущего ремонта электротехнического оборудования ГПЗ. Представляет собой одноэтажное здание с пристройкой Размеры в плане: - высокой части - 36.6х18.4м - пристройки - 15.5х18.4м Высота: - высокой части - 12.5м - пристройки - 4.5м Строительный объем - 9600м3 Площадь застройки - 950м2 Каркас - стальной Ограждающие конструкции - стеновые трехслойные металлические панели с минераловатным утеплителем. Оснащена 5-ю металлорежущими станками, электропечью для осушка обмоток электродвигателей, обмоточным оборудованием, а также вспомогательным и грузоподъемным (1 кран электрический подвесной грузоподъемностью 3.2тс и 1 кран опорный электрический грузоподъемностью 16/3.2тс) оборудованием, необходимым для выполнения указанных выше ремонтов оборудования ГПЗ.			проект	

№ п/п	Наименование объекта	Техническая характеристика объекта	Ед. изм.	Количество	Год окончания строительства ---------- % освоения	Примечание
3.	Расширение воздушной компрессорной	Компрессор воздушный вес компрессора мощность двигателя компрессора Р нагнетания Установка осушки воздуха (точка росы воздуха минус 70 оС) Одноэтажное здание Размеры в плане - 9.2х12.4м Высота - 7.2м Строительный объем - 822м3 Площадь застройки - 114м2 Каркас - стальной Ограждающие конструкции - стеновые трехслойные металлические панели с минераловатным утеплителем. На наружной площадке рессивер воздуха V=25м3 Общий вес оборудования (без компрессора) Установленная мощность без компрессора	шт т квт МПа шт т квт	1 5.76 132 0.8 3 22.47 42	--"--	
4.	Склад растворителя и ингибитора	Емкость V=25м3 Емкость V=50м3 Насос Установленная мощность Общий вес оборудования	шт шт квт т	2 2 2.2 10.52	--"--	
5.	Расширение склада азота в емкостях	Аппарат воздушного охлаждения Насос умягченной воды Установленная мощность Общий вес	шт шт квт т	1 1 34 13.325	--"--	
6.	Склад грузов длительного хранения (складская площадь 200м2)	Заглубленное наполовину высоты сооружение с обвалованием Размеры в плане 18.8х12.8м Высота 3.4м Строительный объем 818м3 Площадь застройки 240м2 Конструкции - монолитный железобетон			--"--	
7.	Ограждение (III оч.)	Длина 3710м Высота 2.0м Конструкции - стальная сетка по железобетонным столбам			--"--	
8.	Ограждение (IV оч.)	Длина 510м Высота 2.0м Конструкции - стальная сетка по железобетонным столбам			--"--	

1169

170

№ п/п	Наименование объекта	Техническая характеристика объекта	Ед. изм.	Количество	Год окончания строительства ---------- % освоения	Примечание
9.	Учебно-курсовой комбинат с общежитием на 150 человек	Двухэтажное здание Размеры в плане 31.0х13.0м Высота здания 6.7м Строительный объем 92700м3 Площадь застройки 403м2 Каркас - стальной Ограждающие конструкции - стеновые легкобетонные панели			--"--	
10.	Теплица. Полезная площадь - 300м2 Теплица вспомогательный корпус	Арочное сооружение Размер 104.0х30.5м Высота 9.7м Площадь застройки 31720м2 Строительный объем 15150м3 Одноэтажное здание Размеры в плане 19.1х43.2м Высота 3.3м Строительный объем 2150м3 Площадь застройки 830м2 Каркас - стальной Ограждающие конструкции - легкобетонные панели			--"--	
11.	Свинарник на 200 голов	Одноэтажное здание Размеры в плане 30.8х24.8м Высота 6.5м Строительный объем 4965м3 Площадь застройки 170м2 Каркас - стальной Ограждающие конструкции - стеновые легкобетонные панели			--"--	

1.2. ГУБКИНСКИЙ ГПЗ III+IV ОЧЕРЕДЬ
IV. Объекты энергетического хозяйства

№ п/п	Наименование объекта	Техническая характеристика объекта	Ед. изм.	Количество	Год окончания строительства ---------- % освоения	Примечание
		Губкинский ГПЗ. 3 и 4 очереди строительства				
1.	Внешнее электроснабжение	Подстанция с двумя трансформаторами 220/10кВ мощностью по 100МВА каждый с расщепленной обмоткой на стороне 10кВ. На стороне 220кВ предусмотрены масляные выключатели (аналогично подстанции 220/10кВ для 1 и 2 очередей Губ. ГПЗ). Подстанция 220/10кВ присоединяется двумя ответвлениями к двум ВЛ-220кВ, снабжающим электроэнергией подстанцию 220/10кВ 1 и 2 очередей Губ. ГПЗ. Для этого предусмотрен участок из 2-х ВЛ-220кВ на металлических опорах. Длина каждой ВЛ-220кВ этого участка - 0.4км.			проект	
2.	Закрытое распределительное устройство N2	Распределительное устройство 10кВ для III и IV очередей Губкинского ГПЗ аналогично распределительному устройству 10кВ для I и II очередей завода.			--"--	
3.	Специальный распределительный пункт 10кВ	РП-10кВ в блок-боксе размером 27х6м. Электроснабжение РП-10кВ осуществляется по двум кабельным линиям 10кВ длиной 80м каждая через разделительные трансформаторы 10/10кВ, мощностью по 2500кВА от ЗРУ 10кВ I и II очередей завода. Номинальный ток сборных шин I-II секций РП-10кВ - 630А. Комплектное РП-10кВ состоит из 18 шкафов, в том числе: - шкафы с масляными выключателями - 11шт - шкафы с разрядниками - 2шт - шкафы с трансформаторами напряжения - 2шт - шкафы с предохранителями - 2шт - шкафы с разъединителями - 1шт. В блок-боксе РП-10кВ размещены 2 трансформатора собственных нужд 10/0.4кВ, мощностью 40кВА и щит станций управления 0.4кВ, состоящий из 1 панели с 10 автоматическими выключателями.			--"--	

№ п/п	Наименование объекта	Техническая характеристика объекта	Ед. изм.	Количество	Год окончания строительства ---------- % освоения	Примечание
4.	Внутриплощадочные сети электроснабжения III очереди	Внутриплощадочное электроснабжение включает в себя электроснабжение высоковольтных электродвигателей УПГ N 3 и трансформаторных подстанций напряжением 10/0.4кВ в ЦПУ N 3. Схема электроснабжения радиальная, сети - кабельные. Прокладка кабелей предусмотрена в основном на кабельных эстакадах, а также эстакадах совмещенных с технологическими эстакадами. К отдельным электроприемникам кабель прокладывается в траншее, в земле на небольших участках. Кабельная продукция: - кабель силовой 10кВ - 11км - кабель силовой до 1кВ - 8км - кабель контрольный - 8км - провод медный гибкий голый (для заземления) - 10кг. Во всех зданиях и на наружных установках выполнено освещение, заземление (зануление) и молниезащита.			--"--	
5.	Внутриплощадочные сети электроснабжения IV очереди	Данный проект включает в себя электроснабжение высоковольтных электродвигателей УПГ N 4, трансформаторных подстанций 10/0.4кВ в ЦПУ N 4, сети к ним, а также наружное освещение площадки УПГ N 4. Схема электроснабжения радиальная, сети предусмотрены кабельные, прокладка в основном по кабельным конструкциям на кабельных эстакадах, а также эстакадах, совмещенных с технологическими эстакадами. К отдельным электроприемникам кабель прокалдывается в траншее в земле на небольших участках. Кабельная продукция: - кабель силовой 10кВ - 14км - кабель силовой до 1кВ - 10км - кабель контрольный - 12км - провод медный гибкий голый (для заземления) - 16кг. Для наружного освещения площади УПГ N 4 предусмотрены 2 прожекторные мачты, на каждой из них установлено по 1 осветительному устройству с ксеноновой лампой мощностью 20кВт и 8 прожекторов с лампами накаливания. Во всех зданиях и на наружных установках выполнено освещение, заземление (зануление) и молниезащита.			--"--	

1.2. ГУБКИНСКИЙ ГПЗ I+II ОЧЕРЕДЬ
V. Объекты транспортного хозяйства и связи

№ п/п	Наименование объекта	Техническая характеристика объекта	Ед. изм.	Количество	Год окончания строительства ---------- % освоения	Примечание
		Губкинский ГПЗ. 3 очередь				
1.	Пожарная и охранная сигнализация	- Кабель телефонный с медными жилами диаметром 0.5мм с воздушно-бумажной изоляцией в свинцовой оболочке с защитным покровом, емкостью 10х2 - Прибор приемно-контрольный охранно-пожарный на 1 луч с датчиками охранной сигнализации, с источником электропитания - Прибор приемно-контрольный охранно-пожарный емкостью до 60 лучей - Кабель контрольный с 4 медными жилами с изоляцией и оболочкой из поливинилхлоридного пластика сечением жил 1.0мм2	км комп л комп л км	0.8 1 1 3.5	Проект	
2.	Внутриплощадочные сети связи	- Кабель телефонный с медными жилами диаметром 0.5мм с воздушно-бумажной изоляцией в свинцовой оболочке с защитным покровом не распространяющем горение, емкостью 10х2, и монтажные материалы - Кабель контрольный с 4 медными жилами с изоляциеей и оболочкой из поливинилхлоридного пластика: сечением жил 0.75мм2 сечением жил 1.5мм2 - Кабель радиофикации к 2 медными жилами диаметром 1.2мм, экранированный, бронированный стальной лентой - Усилитель мощностью 100вт для организации распорядительно-поисковой связи в комплекте с микрофоном, рупорными громкоговорителями до 10 штук, устройством электропитания	км км км км комп л	6.0 0.95 0.5 1.0 1		

1173

№ п/п	Наименование объекта	Техническая характеристика объекта	Ед. изм.	Количество	Год окончания строительства ---------- % освоения	Примечание
		Губкинский ГПЗ. 4 очередь				
3.	Внутриплощадочные сети связи	- Кабель контрольный с 4 медными жилами с изоляцией и оболочкой из поливинилхлоридного пластиката с защитным покровом для прокладки на конструкциях эстакады сечением жил 0.72мм2 сечением жил 1.5мм2 - кабель телефонный с медными жилами диаметром 0.5мм с защитным покровом емкостью 10х2 - кабель радиофикации с 2 медными жилами диаметром 1.2мм, экранированный, бронированный стальными лентами - усилитель мощностью 100вт для организации распорядительно-поисковой связи в комплекте с микрофоном, рупорными громкоговорителями до 10шт, устройством электропитания	 км км км км комп л	 0.7 0.15 2.2 0.4 1	проект проект	
4.	Внеплощадочные сети связи	- Кабель связи одночетверочный с медными жилами диаметром 0.9мм с полиэтиленовой изоляцией для прокладки в грунте и по конструкциям - цифровая система передачи по кабельным линиям связи без усилительного пункта емкостью 15 каналов	км комп л	5.70 0 1	проект	
5.	Пожарная и охранная сигнализация	- Приемо-контрольный прибор пожарной сигнализации до 60 лучей - Приемо-контрольный прибор охранной сигнализации емкостью до 2-х лучей - Кабель телефонный с медными жилами диаметром 0.5мм с воздушно-бумажной изоляцией в свинцовой оболочке, с защитным покровом для прокладки на металлоконструкциях эстакад, емкостью 10х2 - Кабель контрольный с поливинилхлоридной изоляцией с 4 медными жилами сечением 1.0мм2	комп л комп л км км	1 1 0.5 1.2	проект	

1.2. ГУБКИНСКИЙ ГПЗ III+IV ОЧЕРЕДЬ

VI. Наружные сети и сооружения водоснабжения, канализация, теплоснабжения и газоснабжения

N° п/п	Наименование объекта	Техническая характеристика объекта	Ед. изм.	Количество	Год окончания строительства ---------- % освоения	Примечание
1.	Установка нагрева теплоносителя	То же, что I и II очередь	шт	2	проект	
2.	КНС производственно-дождевых стоков с регулирующей емкостью	Одноэтажное здание. Размеры в плане 12.4х6.4м Высота 4.5м Строительный объем - 357м3 Площадь застройки - 80м2 Каркас - стальной Ограждающие конструкции - стеновые трехслойные металлические панели с минераловатным утеплителем. Производительность насосной - 280-400м3/ч, напор - 0.46МПа, установлено 4 насоса во взрывозащищенном исполнении (3раб., 1 рез.). Вспомогательные насосы (1раб., 1рез.) производительность 7.2м3/ч, напор - 0.5МПа во взрывозащищенном исполнении. Регулирующая емкость - с глубиной подводящего коллектора 5м - стальная горизонтальная подземная емкость, диаметр 3.4м, длина - 22.86м.	шт	1		
3.	КНС бытовых стоков	Характеристика аналогична КНС бытовых стоков I, II очереди	шт	2		
4.	Сети водопровода и канализации	Аналогичны сетям внутриплощадочным водопровода и канализации I и II очереди.				
5.	Резервуар противопожарного запаса воды емк.250м3	Аналогично резервуару противопожарного запаса воды I,II очереди	шт	2		
6.	Расширение общезаводской котельной для 3 очереди	Расширение производственного здания котельной на 6.0м Основное оборудование: - котел паровой производительностью 16т/ч, Р=1.4МПа - 1шт - экономайзер чугунный блочный Fнагр.=330.4м2 - 1шт - вентилятор Q=14650м3/ч, Н=278мм.вод.ст., N=15кВт - 1шт - дымосос Q=27650м3/ч, Н=276мм.вод.ст., N=45кВт - 1шт			проект	

1176

1176

1.3. ТАРАСОВСКИЙ ГПЗ 1 ОЧЕРЕДЬ
I. Подготовка территории

№ п/п	Наименование объекта	Техническая характеристика объекта	Ед. изм.	Количество	Год окончания строительства ---------- % освоения	Примечание
1.	Вырубка леса	Деревья хвойных и лиственных пород, высотой до 20 м, диаметр ствола до 0.2 м	шт	18500	1990 ---- 100%	
2.	Подсыпка площадки для отвода поверхностных вод	Грунт для подсыпки перемещается из грунтового карьера, толщина подсыпки не превышает 2.0 м, грунт укладывается в насыпь с послойным уплотнением	м3	400000	-- ---- 70%	
3.	Внутринние автодороги	Поперечный профиль - с обочинами, ширина земляного полотна до 9.0 м, ширина проезжей части до 6.0 м, конструкция дорожной одежды 2х типов: с покрытием из сборных железобетонных плит в северном исполнении размерами 6х2х0.14 м на основании из песка и с покрытием серповидного профиля из песчано-гравийной смеси толщиной по оси 0.2 м.	шт м2	4300 12500	-- ---- 20%	железобетонные плиты размером 6х2х0.14 м площадь покрытия из песчано-гравийной смеси
4.	Пешеходные дорожки	Покрытие из сборных бетонных плит размером 0.5х0.5х0.07 м	м2	2600	----	
5.	Подъездная и межплощадочная автодороги	Поперечный профиль - с обочинами, ширина земляного полотна 10.0 м, ширина проезжей части 6.0 м, покрытие из сборных железобетонных плит в северном исполнении размером 6х2х0.14 м, основание из песка с укладкой между плитами и основанием фильтрующей прослойки из нетканного синтетического материала, объем грунта земляного полотна на 1 км до 25000 м3.	км шт	1.5 750	1990 ---- 100%	протяженность обеих автодорог железобетонные плиты размером 6х2х0.14 м

1.3. ТАРАСОВСКИЙ ГПЗ I ОЧЕРЕДЬ
II. Основные объекты строительства.

№ п/п	Наименование объекта	Техническая характеристика объекта	Ед. изм.	Количество	Год окончания строительства / % освоения	Примечание
1.	Узел предварительной сепарации	Нефтеконденсатоотделитель V=237 м3 Емкость V=100 м3 Ргаза=0.22 МПа Общий вес	шт шт т	3 1 141.5	проект	
2.	Компрессорная сырого газа	В здании центробежный компрессор Мощность двигателя производительность Давление Рвс=0.157 МПа, Рнаг=3.63 МПа винтовой компрессор газа регенерации производительность Мощность двигателя Давление Рвс=2.6 МПа, Рнаг=3.7 МПа Суммарная установленная мощность. Общий вес компрессоров на наружной площадке: сепараторы, емкости углеводородного конденсата, АВО масла и газа I-ой и II-ой ступени сжатия, адсорберы осушки газа, конденсата. Печь нагрева газа регенерации мощностью Дренажные емкости, фильтры осушенного газа, газа регенерации, газа охлаждения, узел приготовления и впрыска ингибитора. Насосы герметичные для СУГ Вес оборудования (без компрессоров) Количество АВО Суммарная установленная мощность АВО Количество насосов Суммарная установленная мощность электродвигателей насосов Одноэтажное здание с пристройкой Размеры в плане: Компрессорного зала - 84.2x25.0 м Пристройка - 6.4x25.0 м Высота компрессорного зала - 15.1 м Высота пристройки - 6.5 м Строительный объем - 31925 м3 Площадь застройки - 2265 м2 Каркас - стальной Ограждающие конструкции - трехслойные металлические панели с минераловатным утеплителем	шт кВт м3/мин шт м3/мин кВт кВт т МВт т шт кВт шт кВт	5 12500 1250 2 18 800 64100 677.2 5.28 1837.48 18 1549.5 13 103.9	проект	

177

1176

№ п/п	Наименование объекта	Техническая характеристика объекта	Ед. изм.	Количество	Год окончания строительства / % освоения	Примечание
3.	Отделение НТК с турбодетандером	На наружной площадке:			--"--	
		Деметанизатор	шт	1		
		Дезтанизатор	шт	1		
		Кожухотрубные и пластинчатые теплообменники, емкости, сепараторы, колонны, дренажные емкости, АВО газа, масла, конденсаторы пропана, ресиверы пропана, промсосуды пропана, пропановые испарители, блок-боксы детандеров, испарители колонн.				
		В здании:	шт	2		
		пропановый холодильный турбокомпрессор	кВт	6978		
		холодопроводность	кВт	6300		
		мощность двигателя	шт	3		
		дожимные центробежные компрессоры				
		Давление Рвс = 1.6 МПа, Рнаг = 7.45 МПа	м3/мин	1400		
		производительность		-1800		
			кВт	12500		
		мощность двигателя	шт	1		
		Вспомогательный компрессор	кВт	75		
		мощность электродвигателя				
		Одноэтажное здание с пристройкой				
		Размеры в плане:				
		компрессорной 99.4х18.4 м				
		пристройки 6.4х18.4 м				
		Высота:				
		компрессорной 11.0 м				
		пристройки 6.5 м				
		Строительный объем - 21000 м3				
		Площадь застройки - 2000 м2				
		Каркас - стальной				
		Отраждающие конструкции - трехслойные металлические панели с минераловатным уплотнением				
		В здании насосной:				
		центробежные нефтяные насосы, герметичные насосы для СУГ	шт	15		
		Количество насосов	кВт	1184.75		
		Суммарная установленная мощность электродвигателя насоса	шт	12		
		количество АВО	кВт	2112		
		суммарная установленная мощность эл. дв. АВО	т	2004.775		
		суммарный вес оборудования (без компрессоров)				
			кВт	50100		
		суммарная установленная мощность эл. дв. компрессоров	т	677.2		
		общий вес компрессоров				

№ п/п	Наименование объекта	Техническая характеристика объекта	Ед. изм.	Количество	Год окончания строительства ---------- % освоения	Примечание
4.	ЦПУ	Отдельностоящее здание размещено во взрывоопасной зоне (по ПУЭ-86). Здание одноэтаж, обеспечено: - принудительной вентиляцией с 5-ти кратным воздухообменом; - системой кондиционирования воздуха помещений с вычислительной техникой и помещений с постоянным пребыванием персонала; - системой газового пожаротушения воздушного и подпольного пространства помещений с оборудованием системы управления Размеры в плане 48.8x30.8 м Высота - переменная (4.6...6.05 м) Строительный объем - 9020 м3 Площадь застройки - 1503 м2 Каркас - стальной Ограждающие конструкции - легкобетонные панели			--"--	
5.	Установка получения пропана высокой чистоты	На наружной площадке: дезтанизатор, пропановая колонна, испарители, воздушные холодильники, емкости пропана. В насосной - насосы пропана Общий вес Количество АВО Суммарная установленная мощность эл. дв. АВО Количество насосов Суммарная установленная мощность эл. дв.	 т шт квт шт квт	 67.74 2 6 6 27	--"--	
6.	Площадка аварийных технологических емкостей	Емкости V=50 м3 факельный сепаратор подземная дренажная емкость Общий вес	шт шт шт т	4 1 1 102.42	--"--	

№ п/п	Наименование объекта	Техническая характеристика объекта	Ед. изм.	Количество	Год окончания строительства ---------- % освоения	Примечание
7.	ТМП. Уч. N 1	Общая протяженность участка ТМП = 880 м. Из них: 1. Двухярусная эстакада на высоких стойках с пролетными строениями, совмещенная с электрокабелями и кабелями КиА = 250 + 130 = 380 м ширина = 7.2 м 2. Одноярусная эстакада на высоких стойках с пролетными строениями, совмещенная с электрокабелями и кабелями КиА, шириной 6 м = 45 м. 3. Одноярусная эстакада на низких отдельностоящих стойках. Факельный коллектор на высоких стойках. Эстакада совмещенная с электрокабелями и кабелями КиА. Ширина эстакады 7.2 м Длина 15 м. 4. Одноярусная эстакада на низких отдельностоящих стойках (проложены две трубы: 1220 и 219) ширина эстакады 1.8м, длина 260м 5. Одноярусная эстакада на низких отдельностоящих стойках, ширина 2.4м, длина 180м. Стойки и пролетные строения - металлические (по всей длине участка). Общая металлоемкость всего участка N 1 (880 м) (вес труб, деталей трубопроводов и трубопроводной арматуры без строительных металлоконструкций и кабелей) - 500 т.			--"--	
8.	ТМП. Уч. 1-1	Протяженность 560 м. Эстакада одноярусная, на низких отдельностоящих стойках. Факельный коллектор на высоких стойках. Эстакада совмещенная с электрокабелями и кабелями КиА. Ширина эстакады 7.2 м. Строительные конструкции - металлические. Общая металлоемкость труб, деталей трубопроводов и арматуры (без строительных металлоконструкций и кабелей) 160 т.			--"--	
9.	ТМП. Уч. 2	Общая протяженность 1680 м. Из них: 270 м - двухярусная эстакада с пролетным строением. Высота нижнего яруса - 7 м, верхнего - 10 м, длина траверс - 6 м. 78 м - одноярусная эстакада с пролетным строением Высота эстакады 5 м с длиной траверс 7.2 м и 7 м с шириной траверс 6 м. Остальная часть эстакады выполнена из отдельностоящих стоек: высота стоек 1 м, длина траверс 1 м, 1.5 м, 3 м, 4.8 м, 7.2 м. высота стоек 2 м, длина траверс 1.5 м, 7.8 м. высота стоек 3 м, длина траверс 1.2 м. Эстакада по всей длине имеет совмещенную прокладку трубопроводов с электрокабелями и кабелями КиА. Металлоемкость тепломатериалопроводов (трубы, детали трубопроводов, арматуры) без строительных металлоконструкций и кабелей - 243 т.			--"--	стойки пролетные строения - металлические

N° п/п	Наименование объекта	Техническая характеристика объекта	Ед. изм.	Количество	Год окончания строительства ---------- % освоения	Примечание
10.	ТМП. Уч. 3	Технологические трубопроводы водопровода, отопления, электрические сети проложены по низким одноярусным эстакадам. Общая протяженность эстакад 410 м в т.ч. при ширине траверс: до 0.5 м - 115 м до 1.0 м - 90 м до 1.5 м - 132 м до 2.0 м - 62 м до 3.0 м - 7 м Металлоемкость составляет 20.5т			--"--	строительные конструкции -металлические Металлоемкость дана без строительных конструкций и электрических сетей
11.	Очистные сооружения бытовых стоков	Технологические трубопроводы водопровода, канализации, отопления проложены по низким одноярусным эстакадам. Общая протяженность эстакад 65 м, в т.ч. при ширине траверс: до 1.0 м - 48 м до 1.5 м - 5 м до 3.0 м - 12 м Металлоемкость составляет 5.7 т 70% эстакад проложены совместно с электрическими сетями.			--"--	Строительные конструкции -металлические Металлоемкость дана без строительных металлоконструкций и электрических сетей
12.	Насосная неочищенных стоков	Технологические трубопроводы канализации, отопления проложены по низким одноярусным эстакадам. Общая протяженность эстакад 70 м, в т.ч. при ширине траверс: до 1.0 м - 35 м до 2.2 м - 35 м Металлоемкость составляет 5.8 т 50% эстакад совмещены с электрическими сетями.			--"--	строительные конструкции - металлические Металлоемкость дана без строительных металлоконструкций и кабелей
13.	ТМП. Уч. 4	Общая протяженность - 360 м. Эстакада выполнена из отдельно стоящих стоек: 185 м - с высотой стоек 1.5 м и длиной траверс 2.4 м; 178 м - с высотой стоек 1.2 м и длиной траверс 1 м Эстакада по всей длине имеет совмещенную прокладку трубопроводов с электрокабелями. Металлоемкость тепломатериалопроводов (трубы, детали трубопроводов, арматура) без строительных металлоконструкций и кабелей - 20 т.			--"--	строительные конструкции - металлические

№ п/п	Наименование объекта	Техническая характеристика объекта	Ед. изм.	Количество	Год окончания строительства ---------- % освоения	Примечание
14.	ТМП. Уч. 5	Общая протяженность - 600 м Из них: 237 м - двухярусная, с пролетными строениями, эстакада высотой 10 м, длиной траверс 6 м; 90 м - одноярусная с пролетными строениями, эстакада высотой 10 м, длиной траверс 3 м. Остальная часть эстакады выполнена из отдельностоящих стоек: высота стоек 2 м, длина траверс 1.2 м. Эстакада по всей длине имеет совмещенную прокладку трубопроводов с электрокабелями и кабелями КиА. Металлоемкость тепломатериалопроводов (трубы, детали трубопроводов, арматура) без строительных металлоконструкций и кабелей - 63 т.			--"--	строительные конструкции - металлические
15.	ТМП. Уч. 6	Общая протяженность 830 м. Эстакада выполнена из отдельностоящих стоек. Высота стоек от 1.7 м до 4 м из-за пересеченного рельефа. Длина траверс 6 м. Эстакада по всей длине имеет совмещенную прокладку трубопроводов с электрокабелями и кабелями КиА. Металлоемкость тепломатериалопроводов (трубы, детали трубопроводов, арматура) без строительных металлоконструкций и кабелей - 93 т.			--"--	строительные конструкции - металлические
16.	ТМП. Уч. 7	Общая протяженность 340 м. Из них: 70 м - одноярусная с пролетными строениями эстакада высотой 8 м. Длина траверс 3 м. Остальная часть эстакады выполнена из отдельностоящих стоек: высота стоек 1 м длина траверс 1 м высота стоек 1.5 м длина траверс 4 м высота стоек 2 м длина траверс 2 м высота стоек 4 м длина траверс 2.4 м Эстакада по всей длине имеет совмещенную прокладку трубопроводов с электрокабелями и кабелями КиА. Металлоемкость тепломатериалопроводов (трубы, детали трубопроводов, арматура) без строительных металлоконструкций и кабелей - 41 т.			--"--	строительные конструкции -металлические

1.3. ТАРАСОВСКИЙ ГПЗ I ОЧЕРЕДЬ
III. Объекты вспомогательного назначения

№ п/п	Наименование объекта	Техническая характеристика объекта	Ед. изм.	Количество	Год окончания строительства / % освоения	Примечание
1.	Технический корпус на 375 человек. Полезная площадь-4000-м2. Рабочая площадь - 3600-м2.	Пятиэтажное здание. Размеры в плане 66.5х15.5м Высота этажа 3.3м Высота здания 16.5м Строительный объем 17000м3 Площадь застройки 1050м2 Каркас - стальной Ограждающие конструкции - легкобетонные панели			проект	
2.	Столовая работающая на сырье на 100 посадочных мест	Одноэтажное здание. Размеры в плане 24.8х36.8м Высота 3.0м Строительный объем 2738м3 Площадь застройки 920м2 Каркас-стальной Ограждающие конструкции-легкобетонные панели			- / 14%	
3.	Ремонтно-механическая мастерская (РММ)	Предназначена для выполнения технического обслуживания и текущего ремонта технологического оборудования ГПЗ. Представляет собой одноэтажное здание, размерами в плане 54.4х-24.4м Высота - 9.0м Строительный объем - 12000м3 Площадь застройки - 1400м2 Каркас - стальной Ограждающие конструкции - стеновые трехслойные металлические панели с минераловатным утеплителем. Оснащена 7-ю металлорежущими станками, балансировочным станком, сварочным и кузнечным оборудованием, а также вспомогательным и грузоподъемным (2 крана подвесных электрических Q=5.0тс каждый) оборудованием, необходимым для выполнения указанных выше ремонтов технологического оборудования ГПЗ. К зданию РММ примыкает бетонированная площадка наружных работ размерами 54х25м			проект	

№ п/п	Наименование объекта	Техническая характеристика объекта	Ед. изм.	Количество	Год окончания строительства ---------- % освоения	Примечание
4.	Овощная теплица с рассадным отделением. Полезная площадь-400м2 Теплица. Вспомогательный корпус	Арочное сооружение. Размер в плане 24.0х28.5м Высота - 9.2м Площадь застройки - 685м2 Строительный объем - 3150м3 Одноэтажное здание. Размеры в плане 19.1х43.2м Высота - 3.3м Строительный объем - 2750м3 Площадь застройки - 830м2 Каркас - стальной.Ограждающие конструкции - легкобетонные панели			проект	
5.	Овощехранилище с холодильником	Одноэтажное здание. Размеры в плане 30.8х24.8м Высота - 6.5м Полезная площадь - 670м2 Рабочая площадь - 400м2 Строительный объем - 4965м3 Площадь застройки - 770м2 Каркас - стальной. Ограждающие конструкции - стеновые легкобетонные панели.			проект	
6.	Магазин смешанных товаров	Одноэжтажное здание. Размеры в плане 25.1х31.1м Высота - 3.6м Торговая площадь - 150м2 Строительный объем - 2810м3 Площадь застройки - 790м2 Каркас - стальной. Ограждающие конструкции - стеновые легкобетонные панели.			проект	
7.	База оборудования. Проходная	Блок-бокс. Размеры в плане 6.0х3.0м Высота - 3.0м Ограждающие конструкции - щитовые панели металлические с минераловатным утеплителем.			проект	
8.	База оборудования. Закрытый склад	Предназначен для закрытого хранения оборудования, поступающего от заводов-изготовителей. Представляет собой одноэтажное здание, размеры в плане 66.8х36.4м Высота - 7.8м Строительный объем - 19000м3 Площадь застройки - 2450м2 Каркас - стальной. Ограждающие конструкции - стеновые трехслойные металлические панелии с минераловатным утеплителем. Здание склада оснащено 4 кранами опорными электрическими грузоподъемностью 5.0тс			проект	

№ п/п	Наименование объекта	Техническая характеристика объекта	Ед. изм.	Количество	Год окончания строительства / % освоения	Примечание
9.	База оборудования. Открытый склад	Предназначен для открытого хранения оборудования и материалов,поступающих от заводов-изготовителей. Представляет собой бетонную площадку размерами 72х106м			- / 6%	
10.	Материальный склад	Предназначен для хранения изделий и материалов для нужд эксплуатации и ремонта оборудования ГПЗ. Представляет собой здание арочного типа размерами 15х30м и оснащен краном подвесным электрическим грузоподъемностью 3.2тс Строительный объем - 5300м3 Площадь застройки - 450м2 Обшивка - кровельная сталь по обрешетке. Утеплитель - минераловатные плиты.			- / 41%	
11.	Склад ЛВЖ	Помещение 6х18м Вес оборудования	 т	 1.886	проект	
12.	Склад реагентов	Емкости масла v=50м3 Емкости масла V=5м3 Емкость антифриза V=200м3 Емкость антифриза V=50м3 Емкость ингибитора V=50м3 Емкость керосина V=50м3 Емкость керосина V=200м3 В здании: Маслорегенерационные установки Блок вакуумной регенарации масла Насосы Суммарная установленная мощность электродвигателей Общий вес оборудования	шт шт шт шт шт шт шт шт шт шт кВт т	2 2 1 1 2 2 2 2 1 9 32.2 71.45	проект	
13.	Склад метанола	Емкости V=50м3 Насос Общий вес оборудования Установленная мощность электродвигателя насоса	шт т кВт	2 8.582 22	проект	
14.	Склад катализаторов в таре	Предназначен для хранения катализаторов в таре, необходимых для нужд эксплуатации ГПЗ. Представляет собой здание арочного типа размерами 15х30м и оснащен краном подвесным электрическим грузоподъемностью 3.2тс Строительный объем - 5300м3 Площадь застройки - 450м2 Обшивка кровельная, сталь по обрешетке. Утеплитель - минераловатные плиты.			проект	Таких складов два

1185

№ п/п	Наименование объекта	Техническая характеристика объекта	Ед. изм.	Количество	Год окончания строительства ---------- % освоения	Примечание
15.	Воздушная компрессорная	Воздушные компрессоры, Рнаг.=0.8МПа Производительность Мощность электродвигателя компрессора Установка осушки воздуха Емкость и насос Суммарная мощность На наружной площадке Ресивер воздуха V=80м3 Общий вес оборудования (без компрессоров)	шт м3/мин кВт шт кВт шт т	2 24 160 2 367.5 4 71.165	проект	
16.	Азотно-кислородная станция	Воздушный компрессор, Рнаг.=21.6МПа Вес Мощность электродвигателя компрессора Общий вес оборудования (без компрессоров) Одноэтажное здание, размеры в плане 24.4х12.2м Высота - 7.5м Площадь застройки - 300м22 Строительный объем - 2250м3 Каркас - стальной. Ограждающие конструкции - трехслойные металлические панели с минераловатным утеплителем.	шт т кВт т	1 3.08 90 15.981	проект	
17.	Склад азота	Емкости V=125м3 Количество насосов Количество АВО Суммарная установленная мощность электродвигателей Общий вес оборудования	шт шт шт кВт т	5 2 2 28 498.23	проект	
18.	Склад грузов длительного хранения	Складская площадь - 200м2 Размеры в плане - 12.6х20.5м Высота - 2.4м Строительный объем - 619м3 Площадь застройки - 260м2 Конструкции - монолитный железобетон			проект	
19.	Склад автопропана. Хранилище автопропана. Островки наливных колонок. Технологический блок.	Емкости V=25м3 Количество насосов Суммарная установленная мощность электродвигателей насосов Общий вес оборудования	шт шт кВт т	3 5 16.4 32.5	проект	

№ п/п	Наименование объекта	Техническая характеристика объекта	Ед. изм.	Количество	Год окончания строительства ---------- % освоения	Примечание
20.	Электроремонтная мастерская	Предназначена для выполнения технического обслуживания и текущего ремонта электротехнического оборудования ГПЗ. Представляет собой одноэтажное здание с пристройкой. Размеры в плане: - высокой части - 36.6х18.4м; - пристройки - 15.5х18.4м Высота: - высокой части - 12.5м; - пристройки - 4.5м Строительный объем - 9600м3 Площадь застройки - 950м2 Каркас - стальной. Ограждающие конструкции - стеновые трехслойные металлические панели с минераловатным утеплителем. Оснащена 5-ю металлорежущими станками, электропечью для сушки обмоток электродвигателей, обмоточным оборудованием, а также вспомогательным и грузоподъемным (1 кран электрический подвесной грузоподъемностью 3.2тс и 1 кран опорный электрический грузоподъемностью 16/3.2тс) оборудованием, необходимым для выполнения указанных выше ремонтов электротехнического оборудования ГПЗ.			проект	

1.3. ТАРАСОВСКИЙ ГПЗ I ОЧЕРЕДЬ
IV. Объекты энергетического хозяйства

№ п/п	Наименование объекта	Техническая характеристика объекта	Ед. изм.	Количество	Год окончания строительства / % освоения	Примечание
1.	Внешнее электроснабжение				проект	
	Воздушная линия 220кВ от подстанции Тарко-Сале	Протяженность 70км. Опоры металлические. Трасса проходит по заболоченной тундре. Тип фундаментов свайный.				
	То же от подстанции Северная	Протяженность 15км.				
	Расширение подстанции Тарко-Сале	Перевод одиночной секционированной системы шин 220кВ подстанции на двойную секционированную систему шин с обходной системой шин. Количество присоединяемых воздушных линий 220кВ (количество линейных ячеек) - 15				
2.	Расширение подстанции Северная	Перевод одиночной секционированной системы шин 220кВ подстанции на двойную секционированную систему шин с обходной системой шин. Количество линейных ячеек - 7			--"--	
3.	Открытое распределительное устройство 220кВ Тарасовского ГПЗ	Одиночная секционированная выключателем система шин 220кВ с вводом на каждую секцию по одной воздушной линии, с установкой на вводах выключателей 220кВ. Два трансформатора мощностью 100МВА напряжением 200/10-10кВ с расщепленными обмотками 10кВ. Два комплекта трансформаторов напряжения и разрядников 220кВ. Здание размером в плане 6х24м для размещения аккумуляторной батареи, панелей управления, защиты и автоматики линий и трансформаторов. 12 разъединителей 220кВ с заземляющими ножами и 4 разъединителя 10кВ, 4 токопровода 10кВ к зданию закрытого распределительного устройства (ввода от трансформаторов). Фундаменты под все оборудование и все виды опор свайные. Открытое распределительное устройство оборудовано освещением, молниезащитой и заземлением.			--"--	

N° п/п	Наименование объекта	Техническая характеристика объекта	Ед. изм.	Количество	Год окончания строительства ---------- % освоения	Примечание
4.	Закрытое распределительное устройство 10кВ	Здание в плане 72.6x12.6м, одноэтажное, фундамент свайный, каркас стальной, ограждающие конструкции - легкобетонные панели, строительный объем - 6000м3. Распределительное устройство имеет 4 ввода от 2 трансформаторов 100МВА 220/10-10кВ, установленными вне здания на площадке открытого распределительного устройства 220кВ (см.выше). Распределительне устройство выного типа состоит из 6 секций. Первые 4 секции имеют разрывную мощность 700МВА, номинальный ток сборных шин 3200А и состоят из: - 26 шкафов с выключателями; - 6 шкафов с разъединителями; - 2 шкафов с трансформаторами собственных нужд мощность 40кВА; - 10 шкафов с трансформаторами напряжения; - 8 шкафов для подключения отходящих кабелей; - 1 шкафа с низковольтной аппаратурой. Все шкафы укомплектованны защитами, аппаратурой управления и автоматики. От этих 4 секций запитаны 8 синхронных электродвигателей компрессоров мощностью 12.5МВт с пуском через реакторы. Номинальный ток пускового реактора 1000А и сопротивление 0.56 Ома. Реакторы размещены в здании. Пятая и шестая секции шин запитаны от 2 и 3 секции через токоограничивающие реакторы 0.25 Ома. Номинальный ток сборных шин 1600А, разрывная мощность 550МВА. Пятая и шестая секции состоят из: - 23 шкафов с выключателями; - 5 шкафов с разъединителями, трансформаторами напряжения. От секций питается 3 синхронных электродвигателя мощностью 6.3МВт с прямым пуском, два асинхронных электродвигателя 0.8МВт и трансформаторные подстанции 10/0.4кВ. Все шкафы укомплектованны защитами, аппаратурой управления и автоматики. В здании распределительного устройства размещена аккумуляторная батарея 220В с одночасовой емкостью 296 ампер-часов, щит постоянного тока, 2 зарядно-подзарядных агрегата.			-- ---- 4%	

№ п/п	Наименование объекта	Техническая характеристика объекта	Ед. изм.	Количество	Год окончания строительства ---------- % освоения	Примечание
5.	Дизельная электростанция	Здание одноэтажное, размеры в плане 15.6х6.6м, строительный объем 520м3, каркас стальной, ограждающие конструкции - легкобетонные панели, фундамент свайный. Характеристика дизель-генератора: Номинальная мощность Частота вращения Напряжение Род тока - трехфазный, переменный. Состав комплекта дизаль-генератора: Автоматизированный электрокомпрессор Блок осушки воздуха Блок охлаждения Агрегат подкачки масла Агрегат электронасосной Бак расширительный Щит генераторный Щит автоматического управления Дополнительно дизель-генератор укомплектован распределительным щитом, емкостью аварийного слива топлива при пожаре.	 кВт об/мин В	 500 1500 400	проект	
6.	Распределительный пункт 10кВ	Здание - блок-бокс 27х6м в плане. Запитывается кабельными линиями от закрытого распределительного устройства 10кВ через разделительные трансформаторы 10/10кВ мощностью 2500кВА (2шт.). Трансформаторы размещены вне здания. Распределительное устройство выкатного типа, разрывной мощностью 350МВА состоит из: 2 шкафов ввода питания с выключателями 1 шкафа с выключателем для секционирования шин 1 шкафа с выкатным разъединителем для секционирования шин 2 шкафов с трансформатором 40кВА 10/0.4кВ и предохранителями 2 шкафов с разрядниками 2 шкафов с трансформаторами напряжения 8 шкафов с выключателями для подключения нагрузок			--"--	

№ п/п	Наименование объекта	Техническая характеристика объекта	Ед. изм.	Количество	Год окончания строительства ---------- % освоения	Примечание
7.	Внутриплощадочные сети электроснабжения	Комплектная трансформаторная подстанция для размещения в здании. Каждая в составе: 2 трансформатора 1000кВА 10/0.4кВ с масляным заполнением 2 шкафа ввода 0.4кВ от трансформатора с выдвижным автоматическим выключателем 1 щит шкафного вида 0.4кВ с секционным выдвижным автоматическим выключателем и 16 выдвижными автоматическими фидерными выключателями 2 шкафа ввода 10кВ с разъединителем и предохранителями. Комплектная трансформаторная подстанция для размещения в здании в составе: 1 трансформатор 250кВА 10/0.4кВ 1 шкаф ввода 10кВ с предохранителями и разъединителем 1 щимт шкафного вида 0.4кВ с одним вводным автоматическим выключателем и 8 фидерными. Комплектная трансформаторная подстанция для размещения в здании в количестве 3шт., каждая в составе: 2 трансформатора 1600кВА 10/0.4кВ с масляным заполнением 2 шкафа ввода 10кВ с разъединителем и предохранителями 2 шкафа ввода 0.4кВ от трансформатора с выдвижными автоматическими выключателями 1 щит шкафного вида 0.4кВ с секционным выдвижным автоматическим выключателем и 16 выдвижными фидерными автоматическими выключателями. Комплетные конденсаторные установки мощность 225кВАр в количестве 8шт. То же мощностью 112.5кВАр - 10шт. Щиты станций управления электродвигателями. Общее количество электродвигателей - 836, количество вводных панелей на ток до 630А 80шт., количество секционных - 40. Кабель силовой 10кВ - 19км Кабель силовой до 1кВ - 130км Кабель контрольный - 35км Система автоматизированного управления энергоснабжением на основе компьютерной техники с оборудованием рабочего места диспетчера-электрика. Система бесперебойного питания мощностью 50кВ (система UPS). Аккумуляторная батарея с зарядными устройствами на напряжение 110В (одночасовая емкость 40 ампер-часов). То же на напряжение 24В (одночасовая емкость 30 ампер-часов).			проект	

1.3. ТАРАСОВСКИЙ ГПЗ I ОЧЕРЕДЬ
V. Объекты транспорта и связи

№ п/п	Наименование объекта	Техническая характеристика объекта	Ед. изм.	Количество	Год окончания строительства / % освоения	Примечание
1.	Гараж. Производственный корпус.	Предназначен для выполнения технического обслуживания и текущего ремонта автомобилей. Состоит из закрытой стоянки на 5 автомобилей, профилактория на 2 поста, отделения ремонта и зарядки акккумуляторов, закрытой мойки автомобилей, бытовых помещений. Представляет собой одноэтажное здание. Размеры в плане 73.0x12.8м. Высота — 4.5м. Строительный объем — 4204м3. Площадь застройки — 934м2. Каркас — стальной. Ограждающие конструкции — стеновые трехслойные металлические панели с минераловатным утеплителем. Оснащен необходимым оборудованием для выполнения указанных выше ремонтов.			— ---- 5%	
2.	Гараж. Стоянка с воздухоподогревом.	Предназначена для облегчения запуска двигателей автомобилей в зимнее время года. Состоит из открытой бетонированной площадки для стоянки 20 автомобилей, калориферной камеры и воздуховода, от которого горячий воздух подается под двигатели автомобилей.			Проект	
3.	Гараж. Склад масел в таре.	Предназначен для хранения смазочных материалов в бочках и барабанах, необходимых для нужд гаража. Представляет собой блок-бокс размерами 3x12м и высотой 4м.			Проект	
4.	Гараж. Топливозаправочный пункт.	Предназначен для заправки автомобилей бензином и дизельным топливом. Состоит из двух подземных емкостей объемом 50м3 каждая и двух топливозаправочных колонок.			Проект	
5.	Здание пождепо на 6 выездов с вспомогательными и служебными помещениями на 70 человек.	Двухэтажное здание с гаражом на 6 выездов. Размеры в плане — 81.8x19.2м. Высота здания — 7.8м. Строительный объем — 12250м3. Площадь застройки — 1600м2. Каркас — стальной. Ограждающие конструкции — легкобетонные панели.			Проект	

№ п/п	Наименование объекта	Техническая характеристика объекта	Ед. изм.	Количество	Год окончания строительства ---------- % освоения	Примечание
6.	Газодымная камера.	Одноэтажное здание. Размеры в плане — 18.4x12.4м. Высота — 4.0м. Строительный объем — 1000м3. Площадь застройки — 250м2. Каркас — стальной. Ограждающие конструкции — трехслойные металлические панели с минераловатным утеплителем.			Проект	
7.	АТСКЭ "Квант" 256 номеров.	Автоматическая телефонная станция квазиэлектронной системы емкостью 256 номеров в комплекте с оборудованием электропитания, телефонными аппаратами, монтажными кабелями, измерительными приборами, инструментом. Оборудование предназначено для работы на внутриведомственной сети с выходом на общегосударственную сеть по 16 исходящим и 16 входящим соединительным линиям.	комп п	1	Проект	
8.	Внешние сети связи к базе связи промзоны.	Аппаратура цифровой системы передачи на 30 каналов для кабельной линии протяженностью до 18км с выделением 5 каналов на 11км в комплекте с электропитающей установкой, монтажными кабелями и контрольно-эксплуатационными устройствами. Магистральный симметричный высокочастотный кабель для прокладки в грунте с медными жилами диаметром 1.2мм при емкости 4x4	комп п км	1 18	Проект	
9.	АТСКЭ "Квант" на 256 номеров для прирельсовой базы.	Автоматическая телефонная станция квазиэлектронной системы емкостью 256 номеров, предназначенная для работы на внутриведомственной сети и выходом на общегосударственную сеть по 16 исходящим и 16 входящим соединительным линиям. В комплекте должны быть телефонные, монтажные кабели, измерительные приборы, инструменты.	комп п	1	Проект	
10.	Кабельная линия связи от узла связи НГС "Пур-Пе" до АТС прирельсовой базы.	Аппаратура цифровой системы передачи на 30 каналов для уплотнения кабельной линии протяженностью до 9км в комплекте с электропитающей установкой, монтажными кабелями и контрольно-эксплуатационными устройствами. Магистральный симметричный высокочастотный кабель с медной жилой диаметром 1.2мм емкостью 4x4 жил бронированный со шланговым покрытием для прокладки в грунте с монтажными материалами. Кабель телефонный 50x2 с медной жилой диаметром 0.5мм с полиэтиленовой изоляцией в полиэтиленовой оболочке для прокладки в трубах кабельной канализации с монтажными материалами.	комп п км км	1 9 0.4	Проект	

1195

№ п/п	Наименование объекта	Техническая характеристика объекта	Ед. изм.	Количество	Год окончания строительства ---------- % освоения	Примечание
11.	Периметральная охранная сигнализация базы хранения оборудования.	Прибор приемно-контрольной охранной сигнализации для охраны периметра ограждения склада ядовитых веществ при протяженности периметра до 500м с набором датчиков на инфракрасное излучение, монтажных кабелей и материалов.	комп л	1	Проект	
		Прибор приемно-контрольной охранной сигнализации для охраны периметра ограждения складской зоны при протяженности периметра до 700м с набором датчиков, монтажных кабелей и материалов.	комп л	1		
12.	Кабельная линия связи до микрорайона Р—6.	Кабель телефонный емкостью 50х2 с медной жилой диаметром 0.64мм с воздушно-бумажной изоляцией, в свинцовой оболочке с защитным покровом для прокладки в грунтах, подверженных смещению, с монтажными материалами.	км	2.8	Проект	
13.	Внешняя связь.	Станция радиорелейная четырехканальная, с базовыми и технологическими радиостанциями, обеспечивающая выход на междугородные каналы и линии АТС. Диапазон частот 150-170МГц. В комплекте с электропитающей установкой, антенно-мачтовым хозяйством, монтажными кабелями, измерительными приборами и инструментом. Высота антенной мачты 45м.	комп л	3	Проект.	(Каждый комплект из 2-х окон. станций.)
14.	Сети связи и сигнализации до площадки аварийно-технологических емкостей.	Кабель телефонный с медной жилой диаметром 0.5мм с воздушно-бумажной изоляцией в свинцовой оболочке с защитным покровом нераспространяющим горение емкостью 10х2, с монтажными материалами.	км	0.9	Проект	
		Кабель контрольный с поливинилхлоридной изоляцией с 4 медными жилами сечением 0.75мм2 с защитным покровом для прокладки по эстакаде.	км	1.0		
		То же, сечением жил 1.0мм2	км	0.4		
		То же, сечением жил 1.5мм2	км	1.5		
15.	Внутриплощадочные сети связи ГПЗ.	Коммутатор междугородный емкостью до 60 каналов.	комп л	1	Проект	
		Часы электрические первичные кварцевые с возможностью подключения до 50 вторичных электрочасов, с оборудованием электропитания.	комп л	3		
		Устройство громкоговорящей связи для организации связи совещаний и диспетчерской громкоговорящей связи емкостью до 10 абонентов.	комп л	1		

№ п/п	Наименование объекта	Техническая характеристика объекта	Ед. изм.	Количество	Год окончания строительства ---------- % освоения	Примечание
		Оборудование радиотрансляционного узла мощностью 1кВт, включающее усилительно-передающее устройство, радиоприемник внешних программ, микрофонное оборудование, антенны для приема различных диапазонов, узлы коммутации, монтажные кабели и провода, измерительные приборы и инструменты.	комп л	1		
		Усилитель мощностью 100Вт для организации распорядительно-поисковой связи в комплекте с микрофонным устройством, рупорными громкоговорителями до 10шт, устройством электропитания.	комп л	1		
		Коммутатор оперативной связи руководителя емкостью до 25 номеров.	комп л	2		
		Коммутатор оперативной связи емкостью до 60 номеров.	комп л	1		
		Коммутатор оперативной связи емкостью до 10 номеров.	комп л	2		
		Оконечные устройства для включения кабельных линий связи в составе шкафов и распределительных коробок.	шт	10		
		Кабель телефонный с медной жилой диаметром 0.5мм с воздушно-бумажной изоляцией в свинцовой оболочке с защитным покровом не распространяющим горение емкостью 10х2.	км	10,8		
		Кабель контрольный с ПВХ изоляцией с 4 медными жилами сечением 1.0мм2 с защитным покровом для прокладки по эстакаде.	км	0.37		
		То же сечением жил 1.5мм2	км	2.2		
		Кабель магистральный для радиофикации с медной жилой с пористой ПЭ изоляцией в ПВХ оболочке, экранированный 2х1.2.	км	0.8		
		То же, бронированный стальной лентой 2х1.2.	км	0.06		
		Провод телефонный распределительный однопарный с медной жилой диаметром 0.5мм с ПВХ изоляцией.	км	0.35		
		Кабель силовой общего назначения с пластмассовой изоляцией с медной жилой сечением 2.5мм2.	км	0.1		
		То же сечением жил 4мм2.	км	0.3		

№ п/п	Наименование объекта	Техническая характеристика объекта	Ед. изм.	Количество	Год окончания строительства ---------- % освоения	Примечание
16.	Внутриплощадочные сети пожарно-охранной сигнализации.	Прибор приемно-контрольный пожарный емкостью до 80 шлейфов, в комплекте с электропитающим устройством и пожарными извещателями.	комп л	1	Проект	
		Устройство сигнально-пусковое пожарное емкостью 4 шлейфа в комплекте с электропитающим устройством и пожарными извещателями.	комп л	3		
		Прибор приемно-контрольный пожарный емкостью 60 шлейфов в комплекте с электропитающим устройством.	комп л	1		
		Прибор приемно-контрольный охранной сигнализации емкостью до 30 шлейфов, в комплекте с электропитающим устройством и извещателями для охраны периметра.	комп л	1		
		Прибор приемно-контрольный охранно-пожарный емкостью 4 шлейфа.	комп л	1		
		Коммутатор оперативной связи емкостью 25 номеров.	комп л	1		
		Установка тревожной сигнализации (УТС)	комп л	1		
		в составе:				
		пульт	шт	1		
		световое табло	шт	4		
		микрофон	шт	1		
		Радиостанция стационарная многоканальная в комплекте с электропитающим устройством.	комп л	1		
		Радиостанция возимая	комп л	6		
		Прибор приемно-контрольный пожарный емкостью до 120 шлейфов, в комплекте с электропитающим устройством.	комп л	1		
		Кабель городской телефонный с медной жилой диаметром 0.5мм емкостью 10х2 с воздушно-бумажной изоляцией в свинцовой оболочке с защитным покровом не распространяющим горение.	км	9.1		
		Кабель контрольный с ПВХ изоляцией с 4-мя медными жилами сечением 1.0мм2 с защитным покровом для прокладки по эстакаде.	км	2.6		

№ п/п	Наименование объекта	Техническая характеристика объекта	Ед. изм.	Количество	Год окончания строительства ---------- % освоения	Примечание
		Кабель силовой общего назначения с пластмассовой изоляцией с алюминиевой жилой сечением 4мм.	км	0.1		
17.	Сети связи и сигнализации до склада автопропана.	Кабель телефонный с медной жилой диаметром 0.5мм емкостью 10х2 с воздушно-бумажной изоляцией в свинцовой оболочке с защитным покровом не распространяющим горение.	км	1.5	Проект	
		Кабель контрольный с ПВХ изоляцией с 4-мя медными жилами сечением 1.0мм2 с защитным покровом для прокладки по эстакаде.	км	0.8		
		Кабель магистральный для радиофикации с медной жилой с пористой ПЭ изоляцией в ПВХ оболочке экранированный емкостью 2х1.2.	км	0.5		
18.	Сети связи и сигнализации на складе автопропана.	Кабель телефонный с медной жилой диаметром 0.5мм емкостью 10х2 с воздушно-бумажной изоляцией в свинцовой оболочке с защитным покровом не распространяющим горение.	км	0.8	Проект	
		Кабель контрольный с ПВХ изоляцией с 4-мя медными жилами сечением 1.0мм2 с защитным покровом для прокладки по эстакаде.	км	1.2		
		То же сечением жил 1.5.	км	0.5		
		Кабель магистральный для радиофикации с медной жилой с пористой ПЭ изоляцией в ПВХ оболочке экранированный емкостью 2х1.2.	км	0.2		

1157

1.3. ТАРАСОВСКИЙ ГПЗ 1 ОЧЕРЕДЬ

VI. Наружные сети и сооружения водоснабжения, канализации, теплоснабжения и газоснабжения

№ п/п	Наименование объекта	Техническая характеристика объекта	Ед. изм.	Коли-чество	Год окончания строительства ------------- % освоения	Примечание
1.	Общезаводская котельная	Блочная котельная в тремя паровыми газомазутными котлами. Полная производительность 75т/час. Топливо - природный газ. Включает в себя: - производственное здание размером 30x24м, высотой 8.5м; - блок-бокс бытовок размером 3.26x12.25м, высотой 3.985м; - блок мокрого хранения соли размером 6x3м; - дымовая труба диаметром 1500мм, высотой 45.0м Блок-бокс бытовок соединяется с производственным зданием котельной переходом размером 3x3.26м. Здание одноэтажное, блочное-безкаркасное. Ограждающие конструкции-металлические трехслойные панели с минераловатным утеплителем. Строительный объем - 7462м3, площадь застройки - 788м2. Основное оборудование производственного здания: - котел паровой производительностью 25т/ч, P = 1.3МПа - экономайзер чугунный блочный - вентилятор Q = 21000м3/ч, H = 418мм вод.ст., N = 45кВт - дымосос Q = 44000м3/ч., H = 307мм вод.ст., N = 75кВт - деаэрационная колонка Q = 50т/ч, - деаэрационный бак объемом 15м3 - сепаратор непрерывной продувки диаметром 300мм - теплообменник пароводяной Q = 25т/ч - насос центробежный Q = 320м3/ч, H = 70м, N = 110кВт - насос центробежный Q = 60м3/ч, H = 140м, N = 45кВт - насос центробежный Q = 20м3/ч, H = 30м, N = 4кВт - подогреватель пароводяной Fнагр. = 53,9м2 - подогреватель водоводяной Fнагр. = 40.6м2 - фильтр ионитный диаметром 1500мм - солерастворитель диаметром 1000мм - насос дозировочный Q = 100л/ч, H = 100м, N = 0.25кВт	шт шт шт шт шт шт шт шт шт шт шт шт шт шт шт шт	3 3 3 3 2 2 1 1 3 3 6 5 5 5 1 2	— ---- 3.3%	
2.	Установка нагрева теплоносителя	Предназначена для получения перегретого теплоносителя с параметрами 115-70оС Расположена на площадке размером 14x6м с обогреваемым полом, под легким навесом. Основное оборудование: - теплообменник кожухотрубчатый ~пар-жидкость~, Fнагр. = 106м2 - теплообменник кожухотруб. ~жидкость-жидкость~, Fнагр. = 41м2 - насос центробежный Q = 210м3/ч, H = 90м, N = 55кВт - емкость подземная заглубленная объемом 40м3	шт шт шт шт	2 2 2 1	проект	

№ п/п	Наименование объекта	Техническая характеристика объекта	Ед. изм.	Количество	Год окончания строительства ---------- % освоения	Примечание
3.	Установка утилизации тепла компримированных газов	Предназначена для получения технологического теплоносителя с параметрами 160-106оС и горячей воды для отопления зданий на технологической установке с параметрами 95-60оС Оборудование расположено на технологической площадке, а насосное оборудование в компрессорной и холодильной станции. Основное оборудование: - печь цилиндрическая вертикальная мощностью 20.0МВт - насос центробежный нефтяной Q=360м3/ч, H=80м, N=110кВт - емкость вертикальная объемом 100м3, Ру=1.0МПа - насос центробежный Q=200м3/ч, H=90м, N=90кВт - емкость подземная горизонтальная дренажная объемом 63м3 - насос центробежный Q=12,5м3/ч, H=20м, N=2,2кВт - теплообменник кожухотрубчатый Fнагр.=1293м2, Ру=5МПа - теплообменник кожухотрубчатый Fнагр.=875м2, Ру=7.5МПа - теплообменник кожухотрубчатый Fнагр.=94м2, Ру=1.6МПа - теплообменник пластинчатый Fнагр.=160м2, Ру=1.6МПа	 шт шт шт шт шт шт шт шт шт шт	 1 4 2 3 1 2 5 3 4 2	проект	
4.	Насосная противопожарного водоснабжения	Размеры в плане 6х18м, высота 6м Производительность - 630м3/ч Напор - 90м Насосы центробежные, горизонтальные (1 рабочий, 1 резервный)			-- ---- 3%	
5.	Резервуары противопожарного запаса воды	Стальные, цилиндрические, вертикальные в теплоизоляции с теплообогревом: V=2000м3, H=11.92м, D=10.43м V=200м3, H=5.98м, D=6.63м	 шт шт	 2 2	проект	
6.	Артскважины	Блок-бокс заводской готовности, размерами в плане 3х3м, высотой 2.6м Производительность - 16м3/ч Напор - 140м Насосы погружные артезианские (1рабочий)	 шт	 3	-- ---- 21.2%	
7.	Насосная хозпитьевого и производственно-противопожарного водоснабжения	Размеры в плане 6х15м, высота - 6м Две группы насосов: 1. Хозпитьевого назначения Производительность - 200м3/ч Напор - 50м Насосы центробежные (2 рабочих, 2 резервных) 2. Производственного назначения Производительность - 38м3/ч Напор - 44м Насосы центробежные (1 рабочий, 2 резервных)	шт	1	проект	

№ п/п	Наименование объекта	Техническая характеристика объекта	Ед. изм.	Количество	Год окончания строительства ---------- % освоения	Примечание
8.	Резервуары хозпитьевого запаса воды	Стальные, цилиндрические, вертикальные в теплоизоляции с теплообогревом: V=400м3, H=7.45м, D=8.53м	шт	2	--"--	
9.	Установка обезжелезивания воды	Производительность 400м3/сут Блок-бокс заводского изготовления. Размеры в плане 3х15м Высота 3.6м	шт	2	--"--	
10.	КНС бытовых стоков	Производительность - 60м3/ч Напор - 25м Глубина подводящего коллектора - 5.25м Блок-бокс заводского исполнения. Наземная часть 3х6, высота - 2.6м Подземная часть D=1.42м, H=7.2м Насосы центробежные (1 рабочий, 1 резервный)	шт	3	--"--	
11.	КНС бытовых стоков	Производительность - 70м3/ч Напор - 32м Блок-боксы заводского изготовления, состоят из: 1. Блока насосной станции с размерами в плане 6х3м 2. Блока управления и вентиляции с размерами в плане 3х9м Насосы центробежные, факельные (1 рабочий, 1 резервный) Глубина подводящего коллектора - 4.5м Глубина подводящего коллектора - 6.0м	 шт шт	 1 1	--"--	
12.	КНС производственно-дождевых стоков	Производительность - 200м3/ч Напор - 47м Блок-боксы заводского изготовления, состоят из: 1. Блока приемных резервуаров по V=50м3 - 2шт Глубина подводящего коллектора - 5.5м 2. Блок машинного отделения с размерами в плане 3х6м Насосы центробежные, факельные (2 рабочих,1 резервный) 3. Блока управления и вентиляции с размерами в плане 3х9м	шт	2	--"--	
13.	Очистные сооружения бытовых стоков	Производительность - 200м3/сут Состоит из: производственно-вспомогательного здания; - здания аэротенков; - блок-бокса доочистки; - блока резервуаров (стальные, вертикальные V=10м3 - 4шт); - иловых площадок (4 карты с размерами в плане 10х12.5м)	шт	1	--"--	
14.	Насосная неочищенных стоков	Производительность - 120м3/ч Напор - 230м Размеры в плане 6х18м, высота - 4.8м Насосы: 2 рабочих, 1 резервный - исполнение взрывозащищенное	шт	1	--"--	

№ п/п	Наименование объекта	Техническая характеристика объекта	Ед. изм.	Количество	Год окончания строительства / % освоения	Примечание
15.	Емкости - накопители неочищенных стоков	Стальные, цилиндрические, вертикальные в теплоизоляции с теплообогревом: V=1000м3, H=11.92м, D=10.43м	шт	2	--"--	
16.	Очистные сооружения от мойки автомобилей	Производительность - 3л/сек Железобетонная емкость 11.34x1.55м с блоком тонкослойного отстаивания и фильтрами	шт	2	--"--	
17.	Внеплощадочные сети производственного водопровода	Сети подземные из стальных труб (диаметр 150мм), изоляция весьма усиленная. Глубина заложения 4.4м	м	700	--"--	
18.	Внутриплощадочные сети хозпитьевого водопровода	Сети подземные из стальных труб. Изоляция чесьма усиленная. Ду до 50мм Ду до 100мм Ду=150мм Ду=200мм Ду=250мм Ду=300мм Ду=350мм Глубина заложения 4.4м Металлоемкость колодцев	 м м м м м м м т	 500 700 1900 50 140 100 150 62	--"--	
19.	Внутриплощадочные сети производственно-противопожарного водопровода	Сети подземные из стальных труб Ду до 100мм Ду=150мм Ду=250мм Ду=300мм Ду=400мм Изоляция весьма усиленная. Глубина заложения 4.4м Металлоемкость колодцев На сети 28 пафетных стволов	 м м м м м т	 850 3600 1400 1350 20 177	--"--	
20.	Внутриплощадочные сети бытовой канализации	Сети самотечные из чугунных труб Ду до 100мм Ду=150мм Ду=200мм Глубина заложения 3.6-5.5м Металлоемкость колодцев	 м м м т	 120 960 650 99.5	--"--	

1204

№ п/п	Наименование объекта	Техническая характеристика объекта	Ед. изм.	Количество	Год окончания строительства ---------- % освоения	Примечание
21.	Внутриплощадочные сети производственно-дождевой канализации	Сети самотечные из чугунных труб: Ду до 100мм Ду = 200мм Ду = 250мм Ду = 300мм Ду = 350мм стальных труб: Ду = 200мм Ду = 300мм дУ = 350мм Глубина заложения 3.6-6.25м Металлоемкость колодцев	 м м м м м м м м т	 250 2050 450 350 370 160 50 80 293	--"--	
22.	Внеплощадочные сети производственно-дождевой канализации	Сети напорные подземные из стальных труб Ду = 200мм Изоляция весьма усиленная Глубина заложения 4.4м Металлоемкость колодцев	км т	13 36	--"--	

2. ПРОГНОЗ ЦЕН НА НЕФТЯНОЙ ГАЗ И ПРОДУКЦИЮ ГАЗОПЕРЕРАБАТЫВАЮЩИХ ЗАВОДОВ.

НАЛОГИ.

2.1. Общее положение

Переработка нефтяного газа в России является сейчас одной из немногих отраслей, в которых государство продолжает полностью контролировать цены на сырье и на значительную часть товарной продукции. Регулирование проявляется в установлении верхнего предела для цен на сырой нефтяной газ, ШФЛУ, сжиженные газы для бытового и коммунального потребления, а также на отбензиненный газ. Индивидуальные углеводородные фракции и смеси углеводородов, предназначенные для промышленного потребления, реализуются по свободным ценам. Изменение "потолка" цен производится периодически, по мере инфляционного роста цен в других отраслях промышленности России. Последний по времени пересмотр цен был осуществлен в июле 1993г.

В целом регулирование цен является разумной мерой, соответствующей интересам большинства газоперерабатывающих заводов (ГПЗ). Дело в том, что на российском рынке нефтяного газа и ШФЛУ отсутствует конкуренция, естественно препятствующая монопольному повышению цен.

Для отбензиненного газа существует естественный потолок в виде цены на природный газ. Но реальное положение большинства Западно-Сибирских ГПЗ, не имеющих ГФУ, таково, что без реализации отбензиненного газа по более высоким ценам, они оказались бы банкротами. Практически единственным покупателем отбензиненного газа ГПЗ является концерн "Газпром", монопольно владеющий всей газопроводной системой России. Установив на него достаточно высокую цену, при этом дающую возможность получать некоторую прибыль и газотранспортным предприятиям, государству удалось сбалансировать интересы той и другой стороны.

Государство вынуждено оказывать ценовую и налоговую поддержку газоперерабатывающей отрасли, имеющей, в силу объективных условий, низкую рентабельность, но решающей часть экологических проблем нефтедобывающих регионов.

Результатом государственного регулирования, в целом, поддержавшего в сложных условиях газоперерабатывающую отрасль, стала некоторая деформация структуры цен, отдаление ее от структуры цен мирового рынка. В связи с ограничением цен на бытовые сжиженные газы, ГПЗ, в состав которых входят ГФУ, стараются компенсировать свои убытки вздуванием цен на сжиженные газы, продаваемые нефтехимическим предприятиям. В условиях неразвитого, сильно монополизированного рынка легких углеводородов им это удалось. Поэтому сейчас цены на пропан и бутан, покупаемые нефтехимией, более чем в два раза выше цены сырой нефти. Такое соотношение цен резко контрастирует с тем, что имеет место на мировом рынке. Конечно, эта ситуация является временной и по мере развития рынка легких углеводородов и интеграции России в мировое хозяйство произойдет сближение структур цен.

1203

В условиях гиперинфляции давать долгосрочные прогнозы цен на российском рынке рискованно: ошибка прогноза, связанная с неверным предсказанием инфляции и других макроэкономических процессов, многократно превышает возможные ошибки оценивания состояния рынка конкретного товара.

Согласно прогноза уровня инфляции, разработанного экспертами Правительства России, в 1994г. средний уровень цен на продукцию топливно-энергетических отраслей повысится, в сравнении с уровнем 1993г., в 4.9 раза, а на природный газ - в 7.2 раза. В следующие два года темпы инфляции должны понижаться и с 1996 установиться на уровне 3-5% в год. При таком сценарии развития инфляционных процессов к 2010г. уровень цен поднимется в 8.4-11.2 раза от уровня 1993г. Надо отметить и то, что прогнозы Правительства на 1992 и 1993 гг. оказались слишком оптимистичными: фактический уровень инфляции превысил прогнозный в 2-3 раза.

Сложность прогнозирования абюсолютного уровня цен на углеводороды усугубляется тем, что часть цен регулируется государством, т.е. является результатом определенной экономической политики. Поэтому неопределенность чисто экономических процессов усиливается как общеполитическими, так и субъективными факторами. Пока что предполагается сохранить государственное регулирование цен еще на пять лет, но неясно, будет ли выдержан этот срок и в каких формах будут осуществляться регулирование. Тем не менее, мы попытались дать прогноз, опираясь на собственный опыт и на прогноз цен на легкие углеводороды на рынках Западной Европы. Основанием для такого подхода является уверенность в том, что мировой рынок станет важным ценообразующим фактором на внутрироссийском рынке даже если государственное регулирование сохранится на больший срок.

2.2. Прогноз цен на ШФЛУ

Мирового рынка ШФЛУ не существует. Поэтому цена на ШФЛУ определяется косвенно, через стоимость продуктов ее разделения и затратами на газофракционирование. В 1993 году стоимость набора продуктов, которые можно получить при разделении ШФЛУ на более узкие по составу смеси и индивидуальные углеводороды, составляла на рынках Западной Европы 152 долл./т. В 1996г. она составит 166 долл./т., а к 2010г. поднимется до 377 долл./т. Принятые для расчетов цены на углеводороды оределены Институтом конъюнктурных исследований. Таким образом, с учетом затрат на газофракционирование, верхняя граница цены на ШФЛУ в Западной Европе составит 144 долл./т. в 1996г. и 330-350 долл./т. в 2010г. При этом речь идет о реализации таких количеств продукта, которые не могут существенно изменить ситуацию на рынке легких углеводородов и привести к падению цен.

Доставка ШФЛУ из Пуровского района Тюменской области в Западную Европу может осуществляться как по железной дороге, так и смешанным способом - железнодорожным и морским транспортом. Самый короткий и дешевый способ транспортировки ШФЛУ в Роттердам состоит в доставке его по железной дороге в Санкт-Петербург и далее по морю. Затраты составят 57 долл./т, из которых 41.5 долл. (49.5 тыс. руб.) стоит перевозка по железной

1204

дороге, 1.5 долл. (1.8 тыс.руб.) - затраты по перевалке груза, 14 долл.- перевозка по морю.

Однако, реализация такого способа доставки ШФЛУ маловероятна. В связи с отделением стран Балтии резко вырос объем перевозок через порт Санкт-Петербурга при крайне неблагоприятном экологическом состоянии Невского залива.

Доставка ШФЛУ в Роттердам через один из черноморских портов (Туапсе) будет стоить уже 77 долл./т. Из общей суммы затрат 48.9 долл. приходится на железнодорожные перевозки (57.7 тыс. руб. по действовавшему на 01.10.93 тарифу и отношению рубля к доллару 1:1200), 1.5 долл. - на перевалку груза, 26.6 долл. - на морские перевозки.

Доставка ШФЛУ через Туапсе в порты Средиземноморья стоит несколько дешевле: в Грецию (Афины) -57 долл./т., а в Италию (Ливорно) - 66 долл./т.

С учетом российской экспортной пошлины (23 долл./т.) минимальные затраты на доставку ШФЛУ на европейские рынки составят 80 долл./т.

Таким образом, предельная цена франко-станция отправления в районе Пур-пе, на которую может рассчитывать производитель ШФЛУ, реализующий ее на западно-европейском рынке, составляет в 1993г. 72 долл./т.,повышаясь в 1996г. до 76-81 долл. и до 160-170 долл. в 2010г.

Приведенные выше оценки стоимости железнодорожных перевозок не учитывают очередного повышения тарифов в 1.5 раза, проведенного 15.10.93. Это повышение создало тупиковые ситуации в ряде отраслей, в том числе и в газопереработке. Для большинства потребителей ШФЛУ перевозка сырья стала обходиться в два и более раз дороже самого сырья, а для заводов, производящих бытовые сжиженные газы, переработка ШФЛУ стала убыточной. Происходит отказ потребителей от ШФЛУ. При этом от ШФЛУ отказываются не только заводы, производящие бытовые газы с регулируемой ценой, но и нефтехимические предприятия, цены на которые государством не регулируются. Аналогичная ситуация сложилась и в угольной промышленности. Такое повышение тарифов представляется необоснованным: рост стоимости железнодорожных перевозок значительно опережает рост цен на продукцию сырьевых и энергетических отраслей. Так, по сравнению с 1991г. цены на природный газ увеличились примерно в 180 раз, на нефть - в 800 раз, а на ШФЛУ - в 300 раз, а на железнодорожные перевозки - в 1507 раз. Поскольку сложившаяся ситуация может вызвать кризис в энергетических отраслях и привести к перебоям со снабжением населения сжиженным газом в условиях необычно холодной зимы, вероятно правительству придется исправить эту диспропорцию.

Полученные оценки позволяют утверждать, что в случае освобождения цен на ШФЛУ от государственного контроля и предоставления производителям права свободного выхода на мировой рынок, внутрироссийская цена приблизилась бы к 85 тыс.руб./т. Как показали события, связанные с повышением железнодорожных тарифов 15.10.93, при сохранении регулирования цен на бытовые сжиженные газы и сдерживания роста цен на них, маловероятно, что внутрироссийский спрос на ШФЛУ даст возможность повысить цену сверх 85 тыс.руб. Но и этот уровень в 4 раза выше действующей сейчас регулируемой цены - 19.8 тыс.руб./т. При реализации правительственного прогноза развития инфляции, цена франко-станция

1205

отправления в районе Пур-Пе составит в 2010г. 714-915 тыс.руб./т. Для потребителей ШФЛУ в Поволжье в 2010г. тонна сырья будет стоить 900-1200 тыс.руб.

2.3. Прогноз цен на отбензиненный и сырой нефтяной газ

С помощью аналогичных рассуждений получены также оценки цен на отбензиненный газ до 2010г. Эти данные представлены в таблице 2.1. При транспортировке газа на экспорт по сетям концерна "Газпром", он, скорее всего, будет стараться получать оплату в твердой валюте на уровне мировых цен на такого рода услуги - 40 долл./1000м3 в 1996г.

При этом рублевые затраты концерна "Газпром" на транспортировку газа по территории России составят:
- 41.3 тыс.руб. в 1996г.
- 47.6 тыс.руб. в 2000г.
- 57.7 тыс.руб. в 2005г.
- 71.1 тыс.руб. в 2010г.

Оплата транзита через территорию Чехии и Словакии производится в натуральной форме: в виде отбора из газопровода 10% транспортируемого газа. В таблице 2.1 дан стоимостной эквивалент этой платы.

В данных таблицы 2.1 не указана российская экспортная пошлина, установленная в ЭКЮ и составляющая 19 ЭКЮ/1000м3 (примерно 23 долл./1000 м3) для иностранных предприятий и для смешанных предприятий с долей иностранных инвестиций в уставном фонде более 30%. Для российских предприятий и для смешанных предприятий с меньшей долей иностранных инвестиций в уставном фонде пошлина составляет 16.52 ЭКЮ/1000м3. Как видно из таблицы, без получения льгот по экспортным пошлинам и при оплате услуг "Газпрома" на уровне мировых цен экспортные операции с отбензиненным газом заведомо убыточны. Однако, имеется прецедент, связанный с налоговыми льготами: на 1993г. от уплаты пошлины на экспорт отбензиненного газа освобождено ПО "Сибнефтегазпереработка".

Как говорилось выше, цена на сырой нефтяной газ, продаваемый газоперерабатывающим заводам, регулируется государством и установлена сейчас на уровне 1125 руб./1000м3. Почти все существующие ГПЗ расположены в районах с падающей добычей нефти и имеют незагруженные производственные мощности. В этих условиях заводы попадают в зависимость от нефтегазодобывающих предприятий. В перспективе эта ситуация не изменится, даже если успешно осуществится демонополизация добычи нефти и каждый ГПЗ будет покупать сырье не у одного крупного продавца газа (иногда у двух-трех), а у множества мелких. Поэтому мы считаем целесообразным сохранение регулируемости цен на сырой нефтяной газ на более длительный, чем намечается правительством, период времени. С учетом упомянутого выше сценария развития инфляции, цена сырого нефтяного газа составит в 2000г. 7030-7770 руб./1000м3, 8160-9900 руб./1000м3 в 2005г. и 9500-12600 руб./1000м3 в 2010г.

1206

Прогноз цен на нефтяной, отбензиненный газ и ШФЛУ, реализумые на внутрироссийском рынке, приведен в таблице 2.2.

2.4. Налоги.

2.4.1. В соответствии с Указом Президента Российской Федерации от 14.06.92 N 629, предприятия всех форм собственности, включая предприятия с участием иностранных инвестиций, осуществляют обязательную продажу 50% валютной выручки от экспорта товаров (работ, услуг) на внутреннем валютном рынке России через уполномоченные российские банки по рыночному курсу рубля.

2.4.2. Ставки пошлины на экспорт конкретных видов товаров установлены приказом Государственного таможенного комитета Российской Федерации от 27.02.92 N 57. Этим документом на "газы нефтяные и газообразные углеводороды прочие" установлена пошлина в размере 19 ЭКЮ за тонну для российских предприятий и 21.85 ЭКЮ за тонну для иностранных предприятий и смешанных предприятий с долей иностранного капитала в уставном фонде свыше 30%. При пересчете газообразных углеводородов в весовые единицы принято приравнивать 1150 м3 одной тонне.
Для отдельных предприятий делаются исключения. В частности, по решению Президента (указ от 19.03.93 N 374) и Правительства России (постановление от 14.03.93 N 218) до 01.01.94 газоперерабатывающие предприятия освобождены от обязательной продажи валютной выручки и от уплаты экспортной пошлины.

2.4.3. С 01.01.92 на территории Российской федерации введен налог на добавленную стоимость. Величина добавленной стоимости определяется как разница между стоимостью реализованных товаров, работ и услуг и стоимостью материальных затрат, отнесенных на издержки производства и обращения. С 01.01.93 ставка налога на продукцию газопереработки, реализуемую по свободным ценам, установлена в размере 20%, а на продукцию, реализуемую по регулируемым ценам - 16.67%. Эта ставка налога установлена на основании Закона Российской Федерации "О внесении изменений и дополнений в налоговую систему России", принятым в июле 1992г.
Товары, экспортируемые непосредственно предприятиями - изготовителями, от налога на добавленную стоимость освобождаются.

2.4.4. На 01.12.93 действует несколько налогов и обязательных платежей, включаемых в себестоимость продукции.

2.4.4.1 Отчисления в фонд социального страхования. Этим названием объединяются собственно отчисления на социальное страхование, на медицинское страхование, в пенсионный фонд и в фонд занятости. Отчисления установлены в размере 39% к фонду оплаты труда (ФОТ) предприятия.

2.4.4.2 Транспортный налог в размере 1% к ФОТ.

2.4.4.3 Отчисления на научно-техническое развитие в размере 1.5% производственных затрат с добавлением отчислений по пункту 2.4.4.1.

2.4.4.4 Отчисления в страховой фонд в размере 1% от стоимости товарной продукции (ТП).

2.4.4.5 Отчисления в инвестиционный фонд в размере 20% от стоимости ТП.

2.4.5. Ряд налогов отчисляется из прибыли предприятия.

2.4.5.1 Налог, перечисляемый в государственный бюджет в размере 32% от размера прибыли, подлежащей налогообложению. От обложения налогом освобождена прибыль всех предприятий, направляемая на инвестиции, включая развитие собственной производственной и непроизводственной базы, при условии полного использования сумм начисленного износа (амортизации).

2.4.5.2 Целевой сбор на содержание милиции в размере 2% от суммы, равной произведению числа работающих на установленную законом минимальную заработную плату.

2.4.5.3 Налог на нужды образовательных учреждений в размере 2% от ФОТ.

2.4.5.4 Налог на превышение нормы ФОТ. Норма ФОТ есть величина, равная произведению числа работающих на минимальную заработную плату и умноженной еще на четыре. Если фактическая величина ФОТ не превышает нормы ФОТ, то налог не взимается. Если фактическая величина ФОТ превышает норму, но не больше,чем в два раза, налог начисляется в размере 32% от суммы превышения. При превышении нормы ФОТ более чем в два раза, на сумму превышения начисляется налог о размере 50%.

2.4.5.5 Налог на содержание жилищного фонда и объектов социально-культурной сферы в размере 1.5% от стоимости реализованной продукции.

2.4.5.6 Налог на имущество в размере 1% стоимости основных производственных фондов и оборотного капитала.

2.4.5.7 Налог на пользователей автомобильных дорог в размере 1% от суммы реализованной продукции.

В целом, налоговая система России находится в стадии становления, отличаясь нестабильностью. По мнению большинства производителей действующие сейчас налоги чрезмерно высоки и не стимулируют развитие производства. В связи с этим, велика вероятность, что новый парламент, избранный 12.12.93 внесет существенный изменения в налоговую систему.

2.5. Выводы и предложения

Как следует из приведенных прогнозов, транспортные затраты и таможенные пошлины делают малопривлекательными для зарубежного инвестора мероприятия, связанные с экспортом в Западную Европу ШФЛУ и отбензиненного газа из пуровского района. Кроме того, представляется маловероятным, что Правительство России даст разрешение на экспорт значительного количества ШФЛУ. Во-первых, в России имеются значительные недозагруженные мощности по газофракционированию. Во-вторых, на использование продуктов переработки ШФЛУ сориентирован ряд нефтехимических предприятий, уже сейчас испытывающих нехватку сырья. С падением добычи нефти увеличится дефицит прямогонного бензина, используемого для пиролиза. В связи с этим следует ожидать переориентации этиленовых производств с прямогонных бензинов на легкое углеводородное сырье. В-третьих, значительная часть жилого фонда России использует в качестве топлива сжиженные углеводородные газы. Вывоз значительных количеств ШФЛУ может создать трудности с обеспечением бытовым топливом сотен тысяч российских граждан. При этом вероятно значительное увеличение

1208

потребления сжиженных газов в сельской местности в связи с быстрым ростом числа фермерских хозяйств, для которых сжиженные газы являются самым удобным видом топлива. В-четвертых, страны СНГ, не имеющие собственных ресурсов, будут иметь предпочтение при закупке ШФЛУ и индивидуальных фракций легких углеводородов из-за географического положения и уже сложившихся экономических связей.

Что касается экспорта отбензиненного газа с ГПЗ по магистральным газопроводам концерна "Газпром", то эффективность его будет повышаться по мере роста цен на газ в Западной Европе. Но в начальный период, без льгот по налогам, экспорт газа будет малоэффективным или даже убыточным для производителя. Учитывая экологическую роль отрасли, необходимо, чтобы Правительство России продлило, как минимум до 2000г., льготы, действующие в 1993г.

Для ШФЛУ, производимого на ГПЗ Пуровского района, по нашему мнению, следует предусмотреть его реализацию на внутреннем рынке России. При этом можно использовать несколько производственных схем:

- включить в состав учредителей СП Тобольский комплекс по переработки ШФЛУ, переработать в Тобольске весь объем ШФЛУ и получить для реализации на экспорт более дорогие товарные продукты;
- реализовать ШФЛУ на внутреннем российском рынке, использовав вырученные средства для нужд СП.

2.6. Источники информации и исходные данные для работы.

2.6.1. Цены мирового рынка на углеводороды и природный газ до 2010г. приняты по литературным источникам. Цена реализации отбензиненного газ на границе Германии в 1993г. равна 80долл./1000м3.

2.6.2. Стоимость морских перевозок ШФЛУ принималась по данным института Комплексных транспортных работ при Министерстве экономики России.

2.6.3. Затраты концерна "Газпром" на перекачку отбензиненного газ по территории России оценены на основе:
- книги П.Т.Еременко и Н.А.Воробьева "Развитие трубопроводного транспорта в СССР и за рубежом", Москва, изд. "Недра", 1989;
- "Нормативов стоимости строительства и эксплуатации газопроводов и сооружений на них",(РТМ-1035-86), Киев, 1986;
- фактические данные Министерства газовой промышленности за 1989г.

2.6.4. Оценка вероятного тарифа концерна "Газпром" на перекачку газа в твердой валюте выполнена по аналогу, в качестве которого принят проект трансазиатского газопровода (журнал "Нефть, газ и нефтехимия за рубежом", N 2, 1992). В тарифе заложена прибыль в размере 20%;

2.6.5. Затраты на транспортировку газа от границы России до границы Германии определены на основе фактических затрат ПО "Сибнефтегазпереработка" в 1993г.:
- транзит по территории Украины - 21 долл./1000м3;
- транзит по территории Чехии и Словакии - 10% от объема перекачиваемого газа.

Таблица 2.1

Прогноз цен на отбензиненный газ при реализации его на экспорт,долл/1000м3

	1996г	2000г	2005г	2010г
Цена отбензиненного газа на рынке Западной Европы	90	119	165	230
Затраты на транспортировку по территории России	40	45	52	60
Затраты на транспортировку по территории Украины	23	27	31	35
Затраты на транспортировку по территории Чехии и Словакии	9	12	17	23
Цена в районе Пур-Пе	18	35	65	112

Таблица 2.2

Прогноз цен на российском рынке на нефтяной, отбензиненный газ и ШФЛУ в Пуровском районе Тюменской области

Наименование продукции	1996г.	2000г.	2005г.	2010г.
Нефтяной газ, тыс.руб./тыс.м3	6,25 - 6.37	7.03 - 7.77	8.2 - 9.9	9.5 - 12.6
ШФЛУ, тыс.руб./т	108 - 110	531 - 586	616 - 748	714 - 915
Отбензиненный газ, тыс.руб./тыс.м3 - для регулируемых цен	57,5 - 58,6	55.3 - 63.1	67.4 - 85.7	81.3 - 114.4

2.7. Дополнительная информация

Дополнительная информация дается на основании телефонных запросов.

В пункте А данного раздела содержатся, в качестве образца, выписки из прейскуранта 1991 г. на железнодорожные перевозки, спользуемого сейчас в качестве исходной информации для определения текущих тарифов: текущие тарифы получаются умножением базового тарифа на индекс роста, устанавливаемый Министерством путей сообщения по согласованию с Правительством России.

В пункте Б даются значения тарифов на перевозку ШФЛУ по нескольким направлениям.

А. Из прейскуранта N 10-01 "Тарифы на грузовые железнодорожные перевозки". Тарифное руководство N1 Министерства путей сообщения СССР в двух частях,1990,(введен в действие с 01.01.91):

Часть 1.

9. Определение платы за перевозку грузов в цистернах

9.1. За перевозку грузов наливом в цистернах расчет провозных плат производится по следующим тарифным схемам (табл.N2).

1210

Наименование груза	В цистернах	
	общего парка МПС СССР	принадлежащих предприятиям и организациям министерств и ведомств или арендованных ими
	N тарифной схемы	
1. Нефть и нефтепродукты (поз. 20100, 21100 - 21500, 22100 - 22500	19	20
2. Газы сжиженные (поз. 22600, 48700)	21	22
3. Спирты и фенолы (поз. 49300)	23	24
4. Скоропортящиеся грузы, перевозимые наливом в цистернах (поз. 55100 - 55400, 57400, 58400, 59100, 59200, 59500)	25	26
5. Другие грузы, перевозимые в цистернах	27	20

9.2.Плата за повагонные перевозки наливных грузов и цистернах определяется путем умножения платы за 1т по соответствующим тарифным схемам на вес груза в цистернах (кроме газов сжиженных поз. 22600 и 48700).

9.3. За перевозку газов сжиженных (поз. 22600 и 48700) в цистернах плата взимается за вес груза в цистерне, но не менее чем за 22т.

Часть 2, раздел 4

Раздел 4 содержит платы с тонны за перевозку наливных грузов по тарифным схемам N 19, 21, 23, 27 в цистернах общего парка МПС; по тарифным схемам N 20, 22, 24, 26 в цистернах, принадлежащих предприятиям и организациям министерств и ведомс- тв или арендованных ими, а также по тарифным схемам N 28 (в цистернах общего парка МПС) и N 29 (в цистернах, принадлежащих предприятиям и организациям министерств и ведомств или арендованных ими) за перевозку нефтяных грузов от пунктов распыления или распределительных пунктов дороги до станции окончательного назначения. Плата за повагонную отправку по этим схемам исчисляется путем умножения платы с тонны по соответствующей схеме на вес груза в цистерне.

1211

Расчетные таблицы плат за перевозку наливных грузов в цистернах
(Схемы N 19 - 29)

Провозная плата определяется умножением платы с 1 тонны по соответствующей схеме на вес груза в цистерне.

(в рублях)

Номер схемы	Расстояние, км					
	2901 - 3000	3001 - 3100	3101 - 3200	3201 - 3300	3301 - 3400	3401 - 3500
19	14.6	15.1	15.5	16.0	16.4	16.9
20	12.6	13.0	13.4	13.8	14.2	14.6
21	41.5	42.8	44.1	45.4	46.7	48.0
22	20.7	21.4	22.0	22.7	23.3	24.0
23	26.8	27.6	28.4	29.3	30.1	30.9
24	18.0	18.6	19.2	19.7	20.3	20.8
25	39.0	40.2	41.4	42.6	43.8	45.0
26	12.8	13.2	13.6	14.0	14.4	14.8
27	18.6	19.1	19.7	20.3	20.9	21.5
28	13.6	14.0	14.5	15.0	15.4	15.9
29	11.8	12.2	12.6	13.0	13.4	13.8

Б. Транспортные железнодорожные тарифы на перевозку ШФЛУ, действующие с 15.10.93

	расстояние км	стоимость по прейскуранту 1991 г, руб/т	Коэффициент к тарифам 1991 г.	Стоимость перевозки с 15.10.93 руб/т
Пурпе - Тобольск	912	14.8	1507	22304
Южный Балык - Тобольск	483	9.5	1507	14316
Пурпе - Южный Балык	429	8.8	1507	13261
Пурпе - Миннибаевский ГПЗ (Альметьевск)	2206	32.4	1507	48827
Тобольск - Миннибаевский ГПЗ (Альметьевск)	1294	19.7	1507	29688

212

	расстояние, км	стоимость по прейскуранту 1991г., руб/т	коэффициент к тарифам 1991г.	стоимость перевозки с 15.10.93, руб/т
Пурпе-Тобольск	912	14.8	1507	22304
Южный Балык - Тобольск	483	9.5	1507	14316
Пурпе - Южный Балык	429	8.8	1507	13261
Пурпе - Мининбаевский ГПЗ (Альметьевск)	2206	32.4	1507	48827
Тобольск - Мининбаевский ГПЗ (Альметьевск)	1294	19.7	1507	29688

GAS RESOURCES DATA-BOOK 3

(ENGLISH VERSION)

1214

BOOK 3

CHARACTERISTICS OF FACILITIES FOR ASSOCIATED GETROLIUM GAS PROCESSING IN PUR AREA OF TYUMEN REGION. PROGNOSIS OF PRICES

1215

CONTENT

1.1. Gubkinsky GPP. 1-st 1nd 2-nd Stage 3
I. Preparation of the Construction Site (1-st+2-nd stage) 3
II.Main construction facilities. 5
III.Auxiliary and Service Facilities. 31
IV.Power Facilities 36
V.Transport and Communicatin Facilities. 48
VI.External networks and facilities for water,heat and gas supply and sewarage. 59

1.2. Gubkinsky GPP. III+IV Stages. 75
1. Construction Site Preparation. 75
II. Main Construction Facilities 79
III. Auxiliary and Servicing Facilities 91
IV. Power Facilities 96
V.Transport Facilities and Communication 101
VI.External Networks and Facilities of Water Supply, Sewerage, Heat Supply and Gas Supply Systems 105

1.3. Tarasovsky GPP, 1st Stage. 108
I. Construction Site Preparation 108
II. Main Construction Facilities 110
III. Auxiliary Facilities 124
IV. Power Facilities 134
V. Transport and Communication Facilities 145
VI. External Networks and Facilities of Water Supply, Sewerage, Heat Supply and Gas Supply Systems . . . 159

2. PROGNOSIS OF PRICES FOR OIL GAS AND REFINARY PRODUCTS. TAXES 171
2.1. General Conditions 171
2.2. The Prediction of Prices for Broad Fraction of Light Hydrocarbons 173
2.3. Price Prognosis for Stripped and Raw Oil Gas. . . 175
2.4. Taxes 177
2.5. Conclusions and Suggestions. 179
2.6. Sources of information and initial data. 180
2.7. Additional Information 183

1.1. Gubkinsky GPP. 1-st 1nd 2-nd Stage

I. Preparation of the Construction Site (1-st+2-nd stage)

Nos.	Description	Technical characteristics	Units	Q-ty	Completion of construction % of development	Notes
		Gubkinsky GPP. 1-st and 2-nd Stage of Construction				
1	Felling	Trees of cone-bearing and broad-leaved species, up to 20 m high, trunk diam. up to 0.2 m	pcs	77500	1988 / 100%	
2	Peat removal from swamped areas	Peat very rotten, extremely moistened, peat occurence up to 2.0 m deep	m3	82500	-"-	
3	Soil addition on site for surface drainage	Soil for addition is transfered from soil and man-made pits, done by hydraulic filling. The thickness of added soil does not exceed 2.0 m. Soil is compacted layer after layer.	m3	550000	-"-	

1217

Nos.	Description	Technical characteristics	Units	Q-ty	Completion of construction % of development	Notes
4	Internal motor roads	Transverse profile - with shoulders, width of subgrade is up to 9.0m, width of passage way is up to 0.6 m.	pcs.	6200	-"-	Slabs of 6x2x 0.14m
		Design of 2 types of pavement with precast slabs in north design of 6x2x0.14m on sand and gravel base and with sickle-shaped sand and gravel coat of 0.2m thickness by axis	m2	2500	-"-	Area of sand and gravel coat
5.	Walk ways	Precast slabs coat of 0.5x0.5x x 0.07m	m2	750	-"-	
6.	Access road	Cross-section with shoulders, width of subgrade - 10.0m, width of passageway - 6.0m.	km	14	-"-	Extention
		Precast slab coat in north design of 6x2x0.14m on sand and gravel base,earth mass of subgrade per 1 km is up to 25000 m3	pcs.	7500	-"-	Slabs of 6x2x x0.14m

1.1.GUBKINSKY GPP I+II STAGE

II.Main construction facilities.

Nos.	Description	Technical characteristics	Units	Q-ty	Completion of construction % of development	Notes
		1st.stage.Q=1.07 billion m3/yr.				
1.	Area of oil and condensate separators	Oil and condensate separator V=237m3	pcs.	2	1988 ---- 100%	
		Tank V=100m3	-"-	1		
		Weight of equipment	t	115		
2.	Compressor building. Outdoor equipment and dehydration	Indoors: Two-stage centrifugal compressor of unstripped petrolium gas	pcs.	3	1988 ---- 100%	
		Capacity	m3 -- min.	1250		
		P suction	MPa	0.157		
		P discharge	-"-	3.63		
		Motor power	kW	12500		

129

Nos.	Description	Technical characteristics	Units	Q-ty	Completion of construction % of development	Notes
		Regeneration gas screw cmpressor	pcs.	1		
		Capacity	m3/min	18		
		P suc.	MPa	2.6		
		P dis.	-"-	3.7		
		Motor power	kW	800		
		Centrifugal compressor of dry stripped gas				
		Capacity	m3/min	1400-1800		
		P suc.	MPa	1.6		
		P dis.	-"-	7.6		
		Motor power	kW	12500		

Nos.	Description	Technical characteristics	Units	Q-ty	Completion of construction % of development	Notes
		Total installed compressor power	-"-	63300		
		Total weight of compressors	t	519.55		
		One-story building with annex				
		Compressor room dimentions in plan 84.5x24.9m Annex dimentions in plan 6.2x24.9m				
		Cubic content - 33750m3				
		Compressor building height - 15.6 m Annex height - 5.8m				
		Construction area - 2260m2				
		Frame - steel				
		Fencing structures-wall metal three-layered panels with mineral cotton heat insulator				

Nos.	Description	Technical characteristics	Units	Q-ty	Completion of construction % of development	Notes
		Outdoor separators,vessels,oil and gas air coolers,adsorbers for gas and condensate dehydration,drainage underground tanks,filters,station for corrosion inhibitor preparation and injection,regeneration gas heater				
		Power	MW	5.28		
		Inside pump house: Tight pumps for liquefied hydrocarbons,antifreeze	pcs	10		
		One-story building: Dimension in plan 18.4x6.4m Hight 6.5 m Cubic content -765m3 Construction area - 118.0m2 Frame - steel Fencing structures - wall metall three-layered panels with mineral wool heat insulator				
		Total installed power of pumps and air coolers motors	kW	2769		
		Total weight of equipment without compressors	t	1681.5		

Nos.	Description	Technical characteristics	Units	Q-ty	Completion of construction / % of development	Notes
3.	Flare	Separator	pcs.	4	1988 / 100%	
		Underground tank				
		Total weight of equipment	t	62.6		
		Stack	pcs.	2		
		Diameter	m	1		
		Height	-"-	80		
4.	Central control room No.1	For supply of low voltage electrical receivers of gas conditioning unit No.1 three complete two transformer 10/0.4 kV substations are designed in electrical room adjacent to central control room			1988 / 100%	

1223

Nos.	Description	Technical characteristics	Units	Q-ty	Completion of construction % of development	Notes
		Detached building located in explosion hazardous zone (according to PUE-86) Two-story building is provided with: - forced ventilation with five -fold air exchange - gas fire fighting system for underfloor space of central control room Dimentions in plan 30.8x24.8m Height of the building - 14.5m Cubic content - 11080m3 Construction area - 764.0m2 Building frame - steel Fencing structures - wall light concrete panels				

Nos.	Description	Technical characteristics	Units	Q-ty	Completion of construction % of development	Notes
5.	Chemical facilities	Outdoor ground: Oil tanks V=50 m3	pcs.	5	1989 100%	
		Antifreeze tanks V=200m3	-"-	2		
		Oil degassing unit Indoors : Oil regenerating unit Gear pumps	pcs.	7		
		Total installed power	kW	28		
		Total weight of equipment	t	43.041		
		One-story building: Dimensions in plan 30.4x6.4m Height 6.5m Cubic content - 1265.0m3 Construction area - 200m2 Frame-steel Fencing structures - wall metall three-layered panels with mineral wool heat insulator				

125

Nos.	Description	Technical characteristics	Units	Q-ty	Completion of construction % of development	Notes
6.	Building for nitrogen and oxygen station	Nitrogen capacity P=20 MPa and 1.5 MPa of 02-0.01 % purity	m3 -- hr.	135	1988 ---- 100%	
		Oxygen capacity P=20 MPa of 02-99.7% purity	-"-	35		
		Air piston compressor	pcs.	1		
		Power	kW	75		
		Nitrogen piston compressor	pcs.	2		
		Power	kW -"-	132 75		
		Total weight of compressors	t	13.255		
		Total weight of equipment	-"-	17.449		
		One-story building Dimentions in plan 24.7x12.7m Height- 7.5m Cubic content - 2360m3 Construction area - 315m2 Frame - steel				
		Fencing structures - light concrete panels				

Nos.	Description	Technical characteristics	Units	Q-ty	Completion of construction % of development	Notes
7.	Outdoor ground of nitrogen and oxygen station.	Storage at P=5.0 MPa			1988	
		Tank V=125m3	pcs.	5	---- 100%	
		Water tank V=10m3				
		Air cooler	pcs.	1		
		Pump	pcs.	2		
		Total weight of equipment	t	498.412		
		Total installed power	kW	45		
8.	Utilities pipelines Section No.1	Total extension of utilities pipeline section - 1933m			1988 ---- 100%	
		It includes: 1.Double-tier pipe rack on elevated posts with spans. Width - 7.8m. Length -105m. Span length - 105m.				

1227

1228

Nos.	Description	Technical characteristics	Units	Q-ty	Completion of construction % of development	Notes
		2. Double-tier pipe rack on elevated detached posts. Width - 3.6m Length - 235m.				
		3. One -tier pipe rack on detached posts of 1-6m height. Width - 3.6 m. Length - 262 m.				
		4. Ditto Width - 3m. Length - 150m.				
		5. Ditto Width - 1.2m. Length - 56m.				
		6. Ditto up to 6 m height. Width 1.8 m. Length 1125 m. Metal posts and spans (along the total length of the section)				

Nos.	Description	Technical characteristics	Units	Q-ty	Completion of construction % of development	Notes
		Pipe rack up to 70% of its length is combined with power and instrumentation cable. Total metal capacity of pipe section (weight of pipes,pipe parts and valves without building constructions and cable) makes up 797 t.				
9.	Section No.2	Total extention of utilities pipeline section - 1050m. 1.Double-tier pipe rack on elevated posts with spans. Width - 6m. Length - 246m. Span length - 246m. 2.One-tier pipe rack with spans on detached posts of 1-6 m hight. Width - 3 m Length- 95m. Span length - 16.5m.			1988 ---- 100%	

1229

Nos.	Description	Technical characteristics	Units	Q-ty	Completion of construction % of development	Notes
		3.Ditto Width - 2.4 m. Length - 108 m. Span length - 45 m. 4.Ditto Width - 1.2 m. Length - 274 m. Span length 35 m. 5.One-tier pipe rack on detached posts of hight up to 1 m. Width - 1.8 m. Length - 25 m. 6.Ditto of hight up to 1-6 m. Width - 0.6 m. Length - 302 m. Posts and spans are metal (along the total length of the section) Pipe rack up to 50% of its length is combined with power and instrument cable.				

Nos.	Description	Technical characteristics	Units	Q-ty	Completion of construction --- % of development	Notes
		Total metal capacity of pipe section (weight of pipes, pipe parts and valves without building constructions and cable) makes up 114.5 t.				
10.	Section No.3	Total length of utilities pipeline section - 1695 m. It includes: 1.Two-tier pipe rack on elevated posts with spans Width - 6 m. Length - 344 m. Span length - 344 m. 2.One-tier pipe rack on detached posts of 1-6 m hight with spans. Width - 4 m. Length - 865 m. Span length - 27 m. 3.Ditto. Width 2.4 m. Length - 350 m. Span length - 22.7 m.			1988 --- 100%	

131

1252

Nos.	Description	Technical characteristics	Units	Q-ty	Completion of construction % of development	Notes
		4. Ditto. Width 1.2 m. Length 78 m. Span length - 15 m. 5. One-tier pipe rack on detached posts of up to 1 m height. Width - 0.6 m. Length - 58 m. Posts and spsns are all metal (along the total length of the section). Pipe rack up to 70% of its length is combined with power and instrument cable. Total metal capacity of the section (weight of pipes, pipe parts and valves without building constructions and cables) makes up 292.8 t.				

Nos.	Description	Technical characteristics	Units	Q-ty	Completion of construction % of development	Notes
11.	Instrumentation network dispatching	Panel system on the basis of pneumatic electronic devices and electronic switches. Panels - 12 Cables - 46333 Analog input - 15 Discrete input - 560 Discrete output - 240			1988 ---- 100%	
		II Stage.Q=1.07 billion m3/hr.				
12.	Cooling compressor building No.1	Inside compressor building: Two-stage propane turbo comprtessor Isotherm Refrigerating capacity Motor power Auxiliary propane compressor Motor power Total compressor weight Total installed power of compressors motors In pump house annex: tight oil centrifugal pumps for liquefied hydrocarbons	 pcs. oC kW kW pcs. kW t kW pcs.	 2 -38 6978 6300 1 75 132.3 12675 12	-- ---- 48%	

1233

Nos.	Description	Technical characteristics	Units	Q-ty	Completion of construction % of development	Notes
		One-story building with annex Compressor building dimensions in plan 36.6x18.4 m Annex dimensions in plan 12.4x18.4 m Compressor building height- 16.8 m Annex height- 5.4 m Cubic content - 8560 m3 Construction area - 900m2				
13.	Low temperature condensation with turbo expander and outdoor equipment of refrigerating compressor building No.1	At outdoor ground: shell-and-tube and plate heat exchangers Tanks Separators Underground drainage tanks Air coolers Column evaporators Propane condensors Propane receivers Turboexpander in box module Total installed power of pumps and air coolers motors	 pcs. kW	 1 1204.15	-- ---- 48%	

Nos.	Description	Technical characteristics	Units	Q-ty	Completion of construction % of development	Notes
14.	Refrigerating compressor building No.2	Similar to point 12			-- --- 5%	
15.	Low temperature condensation with turbo expander and outside equipment of refrigerating compressor No.2	Similar to point 13			-- --- 5%	
16.	Compressor building. Outside equipment and dehydration.	Inside the building: Two-stage centrifugal compressor of unstripped oil gas	pcs.	2	1989 ----	
		Capacity	m3/min	1250	100%	
		P suc.	MPa	0.157		
		P dis.	-"-	3.63		
		Motor power	kW	12500		
		Regeneration gas screw compressor	pcs.	1		

1235

Nos.	Description	Technical characteristics	Units	Q-ty	Completion of construction % of development	Notes
		Capacity	m3/min	18		
		P suc.	MPa	2.6		
		P dis.	-"-	3.7		
		Motor power	kW	800		
		Centrifugal compressor of dry stripped gas	pcs.	1		
		Capacity	m3/min	1400-1800		
		P suc.	MPa	1.6		
		P dis.	-"-	7.6		
		Motor power	kW	12500		
		Total installed compressor power	kW	38300		
		Total weight of compressors	t	313.7		
		Compressor building				
		One-story building with annex				
		Compressor building dimentions in plan - 84.5x24.9 m				

Nos.	Description	Technical characteristics	Units	Q-ty	Completion of construction % of development	Notes
		Annex dimentions in plan 6.2x24.9 m Compressor building height- 15.6 m Annex height- 5.8 m Cubic content - 33750 m3 Construction area - 2260 m2 At outside area: Separators Tanks Gas,oil,antifreeze air coolers Adsorbers for gas and condensate dehydration Drainage underground tanks Filters Corrosion inhibitor preparation and injection unit Regeneration gas heater of 5.28 MW capacity Inside pump house: Tight pumps for liquefied hydrocarbons,antifreeze.	pcs.	10		

Nos.	Description	Technical characteristics	Units	Q-ty	Completion of construction % of development	Notes
		One-story building Dimensions in plan 18.6x6.6 m Height - 6.5 m Cubic content - 800 m3 Construction area - 122.76 m2 Frame - steel Fencing constructions - wall metal three-layered panels with mineral heat insulation Total installed power of pumps and air coolers Total weight of equipment	 kW t	 2549 1215.317		
17.	Central control room No.2	Detached building located in explosion hazardous area (according to PUE-86) Two-story building is provided with: -forced ventilation with 5 fold air exchange -gas fire fighting system of underfloor space in central control room Dimensioms in plan 30.8x24.8m			1989 ---- 100%	

Nos.	Description	Technical characteristics	Units	Q-ty	Completion of construction % of development	Notes
		Building height - 14.5 m Cubic content - 11080 m3 Construction area - 674 m2 Building frame - steel Fencing constructions - wall light concrete panels				
18.	Propane producing unit	Capacity	kg/hr	1000	1989	
		At outdoor ground:				
		Columns	pcs.	2	100%	
		Air coolers				
		Evaporators				
		Inside the building:				
		Tight oil pumps.	pcs.	4		
		Total power of pumps and air coolers	kW	28		
		Total weight of equipment	t	45.726		
		One-story building: Dimensions in plan 30.6x6.4 Height- 5.0 m Cubic content - 980 m3 Construction area - 196 m2 Frame - steel Fencing constructions - wall metal three-layered panels with mineral wool heat insulation				

1254

Nos.	Description	Technical characteristics	Units	Q-ty	Completion of construction % of development	Notes
19.	Instrumentation networks	Panel systems on the basis of pneumatic and electronic switches. Panels - 10 Cable - 19600 Analog inputs - Discrete inputs - 320 Discrete outputs - 180			1989 ---- 100%	
20.	Utilities pipelines. Section No.4	Total length of utilities pipeline section - 560 m. It includes: 1.Two-tier pipe rack at detached posts. Width - 6 m. Height- 6-9 m. Length - 110 m. 2.Two-tier pipe rack at detached posts. Height- 1-6 m. Width - 2.4 m. Length - 345 m.			1989 ---- 100%	

Nos.	Description	Technical characteristics	Units	Q-ty	Completion of construction % of development	Notes
		3.Ditto Width - 1.8 m. Length - 105 m. Metal posts (along the total length of the section).Pipe rack is combined with electric and instrumentation cable up to 50% of its length. Total metal capacity of the section (weight of pipes, pipe parts and valves without building constructions,cable) makes up 330t.				
21.	Section No.5	Total extension of utilities pipeline section - 170 m. Consists of two-tier posts pipe rack. Height- 6-9 m. Width - 2.4 m. Length - 170 m. Posts are metal along the total length of the section.			-"-	

124

Nos.	Description	Technical characteristics	Units	Q-ty	Completion of construction % of development	Notes
		Pipe rack is combined with electric and instrument cable up to 70% of its length.Total metal capacity of the secton (pipes weight,pipe valves and parts without building constructions and cable) makes up 12 t.				
22.	Section No.6	Total length of utilities pipeline section - 615 m. It comprises: 1.Two-tier pipe rack at elivated posts with spans. Width - 3 m. Length 65 m. Span length - 65 m. 2.Three-tier pipe rack of 1.6-9 m. Width - 3 m. Length - 205 m. 3.One-tier pipe rack with spans of 1-6 m. height. Width - 6 m. Length -345 m. Span length 60 m. Spans - 60 m.			-"-	

Nos.	Description	Technical characteristics	Units	Q-ty	Completion of construction % of development	Notes
		Posts are metal along the total length of the section. Pipe rack is combined with electric and instrument cable up to 50% of its length. Total metal capacity of the section (pipes weight, pipe parts and valves without building contructions and cable) makes up 98 t.				
23.	Section No.7.	Total length of the section is 80 m. Consists of one-tier pipe rack with span. Pipe rack width - 3 m. Span length - 12 m. Total length - 9 t. (without building constructions)			-"-	
24.	Section No.8	Section length - 78 m. Detached posts of 1-8 m height. Pipe rack width - 0.6 m. Total weight - 0.9 t. (without building constructions)			-"-	

1245

Nos.	Description	Technical characteristics	Units	Q-ty	Completion of construction % of development	Notes
25.	Section No.9	Section length - 100 m. Detached posts of 1-5 m. height. Width - 2.4 m. Total weight - 0.91 t. (without building constructions).			-"-	

1.1.Gubkinsky GPP I and II Stages
III.Auxiliary and Service Facilities.

Nos.	Description	Technical characteristics	Units	Q-ty	Completion of construction % of development	Notes
		Gubkinsky GPP.1 and 2 construction stages.				
1.	Administrative building for 180 persons (with canteen for 100 places using local feed stock)	Five-story building. Dimensins in plan 60.06x15.6 m Height of the building - 16.0m Construction area - 960 m2. Cubic content 15000 m3. Useful area - 4000 m2. Operating area - 3600 m2. Frame - steel;fencing structures - light concrete panels			1988 ---- 100%	
2.	Repair workshop	It is used for maintenance and routine repair of GPP process equipment.Building of 24.6x 49.0 m dimensions and 7.0 m. height. Cubic content - 8189 m3. Construction area - 1203 m2. Frame - steel.			_"_	

Nos.	Description	Technical characteristics	Units	Q-ty	Completion of construction % of development	Notes
		Fencing constructures - wall metal three-layered panels with mineral wool heat insulation. Workshop is provided with 6 metal cutting machine tools, balancing machine,welding and blacksmith equipment as well as with auxiliary and load-lifting equipment (3 under-running electric cranes Q=5.0 tf.),required for above mentioned repair of GPP process equipment. Concrete ground of 49x25 m for outside works adjoins to repair workshop. building.				
3.	Storage for highly inflamable liquids	One-story building.Dimensions in plan 18.8x6.6 m. Height - 4.5 m. Cubic content - 560 m3. Construction area - 125 m2. Frame - steel. Fencing constructions - light concrete panels.			-"-	

Nos.	Description	Technical characteristics	Units	Q-ty	Completion of construction % of development	Notes
4.	Shed for cylinders	One-story building Dimensions in plan - 4.0x2.0 m Height - 2.1 m Cubic content - 16.8 m3 Construction area - 8.0 m2 Frame - reinforced concrete posts - piles Fencing structures - asbestos cement sheeting of corrugated profile			1988 100%	
5.	Methanole storage	Tank V=25 m3 Pump Installed power Total weight of equipment	pcs. pcs. kW t	2 1 22 4.137	-"-	
6.	Long term storage facility (storage area 400 m2)	Earth-sheltered buildings Dimentions in plan 24.6x19.4 m Height - 4.0 m. Cubic content - 1908 m3 Construction area - 500 m2 Constructions - monolithic reinforced concrete			-"-	

Nos.	Description	Technical characteristics	Units	Q-ty	Completion of construction % of development	Notes
7.	Ethylene glycol storage	It is designed for storage of ethylene glycole in containers (drums of 200 l.capacity each) It is arch type building of 15.0x30.0 m ,provided with overhead electrical crane crane of 3.2 tf.lifting capacity. Cubic content - 5300 m3 Construction area - 450 m2. Skin - roofing steel sheets on batten. Heat insulation - mineral wool plates.				
8.	Air compressor building	Inside the building:				
		Air compressor	pcs.	2		
		Capacity	m3/min	20		
		Discharge pressure	MPa	0.8		
		Motor power	kW	132		
		Total weight of compressors	t	11.4		
		Air dehydration unit,dew point	C	-70		
		Installed power	kW	43.5		
		One-story building				
		Dimensions in plan -12.6x15.6m				
		Height - 7.2 m				
		Cubic content - 1415 m3				
		Construction area -196.6 m2				

Nos.	Description	Technical characteristics	Units	Q-ty	Completion of construction % of development	Notes
		Frame - steel Fencing structures - wall metal three-layered panels with mineral wool heat insulation. At outside area: Air collector V=25 m3 Total weight of equipment without compressors	 pcs. t	 7 32.335		
9.	Material storage. II Stage	It is designed for storage of articles and materials for operation and repair of GPP equipment. It is arch type building of 15.0x30.0 m, provided with underrunning electrical crane of 3.2 tf. lifting capacity Cubic content - 5300 m3. Construction area - 450 m2. Skin - roofing steel sheets on batten. Heat insulation - mineral wool plate.			1988 ---- 100%	

1649

150

1.1.GUBKINSKY GPP I and II Stages

IV.Power Facilities

Nos.	Description	Technical characteristics	Units	Q-ty	Completion of construction % of development	Notes
		1 Stage				
1.	External power supply	Substation with two 220/10 kV transformers of 100 MVA each with split winding on the side of 10 kV. Oil switches are provided on the side of 220 kV. Substation of 220/10 kV is connected to 220 kV buses of 500/220/110 kV substation in Tarko-Sale by two 220 kV air lines on metal supports.The length of each air line is 2.5 km. The following communication channels are provided: - high frequency communication channel between 220/10 kV substation of Gubkinsky GPP and substation in Tarko-Sale - one remote control channel between Muravlenkovskaya and Tarko-Sale substations (distance is 130 km);			1988 100%	

Nos.	Description	Technical characteristics	Units	Q-ty	Completion of construction % of development	Notes
		- three communication channels between Muravlenkovskaya and Tarko-Sale substations				
2.	Indoor switchgear	10 kV switchgear for I and II Stages of Gubkinsky GPP is located inside the building. One-story building. Dimensions in plan - 72.6x x12.6 m. Height - 6.5 m. Cubic content - 5946 m3. Construction area - 914 m2 Frame- steel Fencing structures - wall light concrete panels. Complete 10 kV switchgear consists of 6 sections.Rated current of collecting buses of sections 1-4 is 3200 A. Each of 4 sections of collecting buses of 10 kV switchgear is connected to its semiwinding of 220/10 kV (50 MVA) transformers.			-"-	

1261

Nos.	Description	Technical characteristics	Units	Q-ty	Completion of construction % of development	Notes
		1-4 sections of 10 kV switchgear consists of 59 cabinets, including: -cabinets with switches (interrupting current -40kA) -30 pcs. - cabinets for connection of outgoing cables - 8 pcs. - cabinets with voltage transformers - 8 pcs. - cabinets with isolators- 10 pcs. - cabinets with transformers for the needs of indoor switchgear - 2 pcs. - cabinet with low voltage devices - 1 pc. 8 synchronous drives of 12.5 MW each are fed from 10 kV buses of sections 1-4. 8 reactors for 1000 A current with 0.56 ohm resistance are installed in the building of 10 kV indoor switchgear for start up of these drives.				

Nos.	Description	Technical characteristics	Units	Q-ty	Completion of construction % of development	Notes
		5-6 sections of 10 kV switchgear are connected through current-limitting reactors (current-1600 A,resistance - 0.14 Ohm) to 1 and 4 sections of collecting 10 kV buses. Rated current of collecting buses of 5-6 sections makes up 1600 A.5-6 sections of switchgear consist of 31 cabinets,including: -cabinets with switches (interrupting current - 31.5 kA) - 22 pcs. -cabinet with isolator - 1pc. -cabinets with voltage transformers - 4 pcs. -cabinets for cable connection - 4 pcs. 4 syncronous motors of 6.3 MW power each,2 induction motors of 800 kW power each,transformer substations of 10/0.4 kV are connected to 10 kV buses of 5-6 sections. 10 kV switchgear is copleted with 2 sets for compensation of capacitive currents.				

1254

Nos.	Description	Technical characteristics	Units	Q-ty	Completion of construction % of development	Notes
		DC board,consisting of 3 panels and relay board,consisting of 4 panels are provided in indoor switchgear. 220 V accumulator battery with 1 hour capacity of 296 ampere-hours is located in indoor switchgear. Accumulator battery is completed with 2 chargers-rechargers Information measuring system for power supply control is also provided.				
3.	Outdoor power supply systems	For power supply of 0.4 kV users of Gubkinsky GPP auxiliary zone,7 transformer substations of 10/0.4 kV are provided. Transformer substation No.4 includes: - 2 10 kV/0.4 kV oil transformers of 1000 kVA power; - 2 10 kV input cabinets with fuse and isolator;			-"-	

Nos.	Description	Technical characteristics	Units	Q-ty	Completion of construction % of development	Notes
		- 2 0.4 kV input cabinets from power transformers with circuit-breaker,current transformers,ammeter,voltmeter,alarm; - 1 0.4 kV cabinet with sectionalizer; - 2 cabinets with 7 feeder circuit-breakers;current transformer and ammeter are installed at each feeder. Transformer substation No.5 in box module of 9x6 m includes: -2 10/0.4 kV oil transformers of 1000 kVA power each; -2 10 kV input cabinets with fuse and isolator; -2 0.4 kV input cabinets from power transformers with circuit-breaker,current transformers,ammeter,voltmeter,alarm; - 1 0.4 kV cabinet with sectionalizer and 20 feeder circuit-breakers;current transformer and ammeter are installed at each feeder;				

Nos.	Description	Technical characteristics	Units	Q-ty	Completion of construction % of development	Notes
		-2 controlled 380 V capacitors of 300 kVA power; -2 380 V distributing stations with 4 feeder circuit-breakers. Transformer substation No.6 in box module of 9x3 m,includes: -2 10/0.4 kV oil transformers of 250 kVA power each; -2 10 kV input cabinets with fuse and isolator; -2 0.4 kV input cabinets with circuit-breaker,current transformers, ammeter,voltmeter,alarm; -1 0.4 kV cabinet with sectionalizer and 12 feeder circuit-breakers;current transformer and ammeter are installed at each feeder; -2 controlled 38 V capacitors of 100 kVA power. Transformer substation No.7 in box module of 9x6 m with 2 10/0.4 kV transformers of 630 kVA power each.The rest electrical equipment is similar to transformer substation No.5.				

Nos.	Description	Technical characteristics	Units	Q-ty	Completion of construction % of development	Notes
		Transformer substation No.8 and transformer station No.9 of outside unit.Each one includes: -1 10/0.4 kV transformer of 160 kVA power; -10 kV isolator;0.4 kV cabinet with 4 circuit breakers. Transformer substation No.10 with 2 10/0.4 kV transformers of 630 kVA power.The rest electrical equipment is similar to transformer substation No.3. Diesel power station is provided in box module of 12.5x3 m for emergency power supply.It includes: -diesel electric automatically controlled unit of 630 kW power,0.4 kV voltage with radiator cooling system; -distributing board with 2 circuit-breakers for 600 A current; -distribiting board with 8 circuit-breakers for 16 A current.				

1267

Nos.	Description	Technical characteristics	Units	Q-ty	Completion of construction % of development	Notes
		10 and 0.4 kV cable systems within plant site of I and II Stages are installed along cable constructions on racks and in cable trenches. Cable : -10 kV power cable-16.3km; -power cable up to 1 kV - 33.5 km; -control cable - 21.5 km. 4 floodlighting masts are provided for outdoor lighting. 1 lighting fixture with xenon lamp of 20 kW power and 8 floodlights with incandescent lamp of 1000 W are installed at each of them. Lighting,grounding and lightning protection are provided in all buildings and at outdoor units.				
4.	Outdoor power systems. II Stage	10 and 0.4 kV cables are installed along cable constructions on racks. Cable: -10 kV power cable - 9.3 km -0.4 kV power cable - 9.7 km				

Nos.	Description	Technical characteristics	Units	Q-ty	Completion of construction % of development	Notes
		-control cable - 10 km. 2 floodlighing masts are provided for outdoor lighting. 1 lighting fixture with xenon lamp of 20 kW power and 8 floodlights with incandescent lamp of 1000 W are installed at each of them. Lighting,grounding and lightning protection are provided in all buildings and outdoor units. Comlete transformer substation No.1 (No.2,No.3) includes: -2 oil transformers of 1000 kVA power, 10/0.4 kV voltage each; -2 input cabinets of high voltage with fuse and isolator; -2 input cabinets of low voltage with circuit-breaker, current transformer,ammeter, voltmeter,alarm; -10.4 kV cabinet with sectionalizer and 2 feeder circuit-breakers;				

1159

Nos.	Description	Technical characteristics	Units	Q-ty	Completion of construction % of development	Notes
		-2 0.4 kV cabinets with 6 feeder circuit-breakers each; current transformers,ammeters are provided at all low voltage feeders. Control stations boards- 20pcs Total number of panels -121pcs 0.4 kV capacitors -8 pcs. Tatal power - 2160 kVA. Electrical equipment: - distributing station for 10 circuit-breakers - 5 pcs. - lighting board for 12 circuit-breakers - 2 pcs. Within unit area cable is installed on electrical racks and on those,combined with pipe racks.In electrical in CCR it is installed in cable channels and in operator room- in false floor. Cable: -power cable up to 1 kV - 35.0 km				cables for feeding

Nos.	Description	Technical characteristics	Units	Q-ty	Completion of construction % of development	Notes
		-control cable - 20.0 km -wire 0.66 kV - 3.0 km -flexible bare copper wire for grounding - 50 kg.				of 0.4kV electrical receivers of gas conditioning unit No.1

126

1.1.GUBKINSKY GPP I and II Stages
V.Transport and Communicatin Facilities.

Nos.	Description	Technical characteristics	Units	Q-ty	Completion of construction % of development	Notes
		Cubkinsky GPP.I Construction Stage.				
1.	Garage building	It is provided for automobiles maintenance and routine repair Consists of indoor parking for 5 automobiles,preventive maintenance for 2 posts,section for battery repair and charge, indoor automobile washing,personnel rooms.It is one-story building of 73.0x12.8 m dimensions in plan. Height - 4.5 m. Cubic content - 4204 m. Construction area - 934 m2. Frame - steel Fencing constructions - wall metal three-layered panels with mineral wool heat insulation.The building is provided with required equipment for above for above mentioned services.			1988 ---- 100%	

Nos.	Description	Technical characteristics	Units	Q-ty	Completion of construction % of development	Notes
2.	Parking with air heating	It is provided to make the start-up of auto drives easier in winter time.The parking consists of outdoor concrete platform of 12x54 m for 15 autos,radiator chamber and air duct from which hot air is supplied under auto drives.			-"-	
3.	Heated storage	It is provided for heated storage of equipment supplied by manufactures.This is an arch type building of 15x60 m, provided with 2 electrical underruning cranes of 3.2 tf. lifting capacity. Cubic content - 10600 m3 Construction area - 900 m2 Skin - roofing steel sheets on batten Heat insulation - mineral wool plates.			-"-	

1263

Nos.	Description	Technical characteristics	Units	Q-ty	Completion of construction % of development	Notes
4.	Non-heated storage	It is provided for indoor storage of equipment, supplied by manufacturers, which does not require heated storage. This is arch type building of 15x60 m, provided with 2 electrical underruning cranes of 3.2 tf. lifting capacity. Cubic content - 10600 m3 Construction area - 900 m2 Skin - roofing steel sheets on batten. Heat insulation - mineral wool plates.			-"-	
5.	Ground for equipment	It is provided for outdoor storage of equipment supplied by manufactures. The ground is concrete one of 60x66 m.			-"-	
6.	Passage way	Box-shaped module - frameless Dimensions in plan - 15.0x3.0m Height - 2.6 m Construction area - 45 m2 Cubic content - 117 m3			-"-	

Nos.	Description	Technical characteristics	Units	Q-ty	Completion of construction % of development	Notes
		Fencing constructions - three-layered metal panels with mineral wool heat insulation				
7.	Fire station building	Two-story building Dimensions in plan - 16.5x 83.5 m Cubic content - 11450 m3 Construction area - 1377 m2 Usefull area for 70 persons - 1300 m2 Frame - steel Fencing constructions - light concrete panels			-"-	
8.	Gas testing chamber	One-story building Dimensions in plan -13.0x19.0m Height - 3.6 m Cubic content - 890 m3 Construction area - 247 m2 Frame - steel Fencing constructions - light concrete panels			-"-	

1166

Nos.	Description	Technical characteristics	Units	Q-ty	Completion of construction % of development	Notes
9.	Fencing	Length - 500 m Height - 2.0 m Constructions - steel grid on reinforced concrete posts			-"-	
10.	External communication	Radio and relay communication system consists of two terminal stations for 24 channels in 150-170 Mhz frequency range in complete with power sources, antennas installed on masts (mast height - 45 m), installation cable, instruments and tools.	set	1	-"-	
11.	Automatic fire alarm device	Receiving monitoring fire guard instrument for connection of 50 alarm loops. It provides operation with automatic fire detectors coming into action on heat, smoke, flame, as well as with break-glass detectors. Provides possibility of automatic fire fighting system switch on and			-"-	

Nos.	Description	Technical characteristics	Units	Q-ty	Completion of construction % of development	Notes
		shut down of process equipment and ventilation from a signal coming from actuated fire detor.It is possible to connect from 10 to 50 detectors to loop	set	1		
		- 10x2 telephone cable with copper core of 0.5 mm diameter in polyvinyl chloride sheathing;	km	8.0		
		- control cable with copper cores of 1.5 mm2 cross-section with insulation and sheathing of polyvinyl chloride plastic, 4 cores;	km	5.0		
		- set of cable boxes for cable installation.	set	1		
12.	Intrasite communication networks	Equipment of coordinated type automatic exhange of 100 numbers capacity with possibility to increase capacity up to 300 numbers for connection of users of next construction stages,provided with phones.	1 set		-"-	

Nos.	Description	Technical characteristics	Units	Q-ty	Completion of construction % of development	Notes
		- sparkproof adapter for connection of 50 users of exchange, located in explosion hazardous zones, in complete with 24 V power source;	1 set			
		- power supply unit for automatic exchange, consisting of rectifiers, automatic devices unit, board devices and accumulator batteries	set	1		
		- equipmment of broadcasting radio center of 1 kW power, which switches on amplifiers and switching centers, radio receiver of external programs, microphones, antennas for reception of different bands	set	1		
		-10x2 telephone cable with copper core of 0.5 mm dia in polyvinyl chlorode sheathing	km	7.5		
		- cable of sparkproof 10x2 telephone network with copper core of 0.5 mm diameter in polyvinyl chloride sheathing;	km	1.5		

Nos.	Description	Technical characteristics	Units	Q-ty	Completion of construction % of development	Notes
		-cable for radio installation and paging with 2 copper cores of 1.2 mm diameter, armoured and sheathed with steel tape;	km	1.2		
		- control cable with 4 copper cores of 1.5 mm2 cross-section, insulation and sheathing of polyvinyl chloride plastic;	km	3.0		
		- primary electrical quartz clock with possibility of connection of up to 50 secondary electrical clocks, with power supply unit;	set	1		
		- loudspeaking communication device for arrangement of meetings and dispatching loudspeaking communication of 10 users capacity;	set	2		
		- amplifier of 100 W capacity for paging arrangement in complete with microphone device,up to 10 loudspeakers, power supply unit;	set	1		

129

Nos.	Description	Technical characteristics	Units	Q-ty	Completion of construction % of development	Notes
		- switchboard for dispatcher prompt communication of up to 25 users capacity;	set	1		
		- switchboard for manager prompt communication with up to 60 users connection;	set	1		
		- switchboard for prompt communication of fire station duty operator with connection of up to 20 users	set	1		
		II Stage				
13.	Fire alarm automatic device	Receivong monitoring instrument for fire and guard alarm up to 50 loops.	set	1		
		Telephone cable with copper cores of 0.5 mm diameter in polyvinyl chloride sheathing of 10x2 capacity	km	9.65		
		Control cable with 4 copper cores of 1.5 mm2 cross-section with insulation and sheathing of polyvinyl chloride	km	1.8		
		General purpose power cable with copper core of 1 mm2 cross-section	km	0.5		

Nos.	Description	Technical characteristics	Units	Q-ty	Completion of construction % of development	Notes
14.	Intrasite communication sytems	Telephone cable with copper cores of 0.5 mm diameter in polyvinyl chloride sheathing,of 10 pairs capacity.	km	1.3	-"-	
		Control cable with up to 4 copper cores of 0.75 mm2 cross section,with polyvinyl chloride insulation and sheathing	km	0.35		
		The same,with cores cross-section of 1.5 mm2	km	0.100		
		Cable for radio installation with 2 copper cores of 1.2 mm diameter,armoured and sheathed with steel tape.	km	0.600		
		Amplifier of 100 W power for paging arrangement in complete with microphone and up to 10 loudspeakers,power supply unit	set	1		
		Control cable with 4 copper cores of 1.5 mm2 cross-section with polyvinyl chloride sheathing and insulation	km	2600		

Nos.	Description	Technical characteristics	Units	Q-ty	Completion of construction % of development	Notes
15.	Fencing of the site	Length - 500 m Height - 2.0 m Constructions - steel grid on reinforced concrete posts			-"-	

1.1.GUBKINSKY GPP

VI.External networks and facilities for water,heat and gas supply and sewarage.

Nos.	Description	Technical characteristics	Units	Q-ty	Completion of construction % of development	Notes
		I Stage				
1.	Boiler house	Modular boiler house with 3 steam gas and fuel oil boilers Total steam generating capacity - 48 t./hr.Fuel - natural gas.Boiler house includes: - production building of 12x 36 m,of 8.4 m height - box-shaped module of personnel rooms of 3.26x12.25 m, of 3.985 m height - section for heat carrier heating - outdoor area of 9x14 m - module for wet salt storage - two chimneys of 1000 mm diameter of 32.11 m height Box-shaped module of personnel rooms is joined with boiler house by link building of 3x3.26 m.			1998 ---- 100%	

1273

Nos.	Description	Technical characteristics	Units	Q-ty	Completion of construction % of development	Notes
		One-story modular frameless building. Fencing constructions - metal three-layered panels with mineral wool heat insulation.				
		Cubic content - 4100 m3				
		Construction area - 542 m2.				
		Main building of boiler house:				
		- steam boiler of 16 t/hr capacity, P=1.4 MPa	pcs.	3		
		- modular cast iron economiser F of heating=330.4 m2	pcs.	3		
		- reducing unit package Q=60 t/hr, P1/P2=14/6	pcs.	1		
		- fan Q=14650 m3/hr, H=278 mm H2O, N= kW	pcs.	3		
		- smoke exhauster Q=27650 m3/hr H= 276 mm H2O. N=45 kW	pcs.	3		
		- feed pump Q=38 m3/hr, H=198 m N=40 kW	pcs.	3		
		- deaeration head Q=50 t/hr	pcs.	2		
		- deaeration tank of 15 m3	pcs.	2		
		- separator of constant purging of 300 mm	pcs.	1		
		- heat exchanger Q=20-40 t/hr, F of heating = 5 m3	pcs.	2		

Nos.	Description	Technical characteristics	Units	Q-ty	Completion of construction % of development	Notes
		- centrifugal pump Q=20m3/hr, H=18 m,N=2.2 kW	pcs.	2		
		- centrifugal pump Q=38m3/hr, H=44 m,N=11 kW	pcs.	2		
		- ionite filter of 1500 mm diameter	pcs.	4		
		- salt dissolving drum of 1000 mm diameter	pcs.	1		
		- metering pump Q=100 l/hr, H=100 m,N=0.25 kW	pcs.	1		
		Equipment for heat carrier heating section:				
		- steam and water heater F of heating = 53.9 m2	pcs.	2		
		- water-to-water heater F of heating = 20.3 m2	pcs.	2		
		- centrifugal pump Q=200 m3/hr H=95 m,N=80 kW.	pcs.	3		
2.	Compressed gas heat recovery unit	This unit is designed for heat carrier generation with parameters of 120-70 oC and 150--100 oC. It is installed at outdoor ground of compressor building.			1988 ---- 100%	

1276

Nos.	Description	Technical characteristics	Units	Q-ty	Completion of construction % of development	Notes
		Pumping equipment is located inside compressor building. Main equipment:				
		- centrifugal pump Q=90 m3/hr, H=0.85 MPa,N=45 kW	pcs.	3		
		- centrifugal pump Q=120 m3/hr H=0.65 MPa,N=40 kW	pcs.	2		
		- vertical tank of 50 m3 capacity,P=1.0 MPa	pcs.	2		
		- steam-to-water heat exchanger F of heating =53 m2	pcs.	1		
		- water-to-water heat exchanger F of heating = 56 m2	pcs.	1		
		- plate heat exchanger F of heating = 648 m2, Pn.=4.0 MPa	pcs.	4		
		- shell and tube heat exchanger F of heating=778 m2, Pn.=7.5 MPa	pcs.	2		
3.	Heat carrier heating unit	It is designed for compressed gas heat recovery unit backup Outside ground of 12.5x12.5 m Main equipment:	pcs.	1	design	
		- cylindrical vertical tube furnace of 15.12 MW				

Nos.	Description	Technical characteristics	Units	Q-ty	Completion of construction / % of development	Notes
		II Stage				
4.	Compressed gas heat recovery unit	Similar to No.2			1989 / 100%	
4a.	Heat carrier heating unit	Similar to No.3			design	
5.	Pump house for portable and process water supply	Gubkinsky GPP I and II Stages 1.Portable water supply pumps: capacity - 90 m3/hr. head - 0.45 MPa	pcs.	3(2+1)	1989 / 100%	
		2.Process water supply pumps: capacity - 90 m3/hr head - 0.85 MPa	pcs.	2(1+1)		
		Prefabricated box-shaped module of 12.7x3.2x4.0 (h) m Automatic operation mode.				

1274

Nos.	Description	Technical characteristics	Units	Q-ty	Completion of construction % of development	Notes
6.	Water deferrization unit	Capacity - 400 m3/day Prefabricated box-shaped module of 15.22x3.2x4 (h) Automatic operation mode.	pcs	1	-"-	
7.	Fire fighting pump house	2 pumps (1+1) capacity - 630 m3/hr head - 0.9 MPa Automatic operation mode.	pcs.	1	-"-	
8.	Tanks for fire water storage	Steel vertical tanks with heating and heat insulation V=1000 m3 V=200 m3	 pcs. pcs.	 2 2	-"-	
9.	Tanks for portable water storage	The same V=300 m3	pcs.	2	-"-	

Nos.	Description	Technical characteristics	Units	Q-ty	Completion of construction % of development	Notes
10.	Water intake from artesian well	1.Pump house capacity - 40 m3/hr. head - 0.75 MPa Prefabricated box-shaped module of 2.95x2.95x2.86 (h) m Automatic operation mode	pcs.	7	-"-	
		2.Artesian well of 426 mm diameter,depth of bottom hole - 152 m	pcs.	7		
11.	Sewage pump station of sanitary effluents	Capacity - 16 m3/hr Head - 0.3 MPa Depth of supplying collector - 4.25 m -above ground part: prefabricated box-shaped module of 3.23x3.22x2.83 (h) m - undeground part: diameter - 1420 mm H=6.5 m Ventilation container module.	pcs.	7	-"-	

1279

Nos.	Description	Technical characteristics	Units	Q-ty	Completion of construction % of development	Notes
12.	Pump station of salt containing effluenmts	The same. Embedded part of construction-rectangular steel modules Dimensions in plan - 0.9x1.15m Depth - 2.8 m	pcs.	1	-"-	
13.	Pump station of treated effluents	Similar to No.11	pcs.	1	-"-	
14.	Purification facilities of industrial and rainwater effluents	1.Prefabricated box-shaped module of 12x3.8x5 (h) m. Additional treatment of effluents,capacity - 400 m3/day. 2.Two open slime pits,each of 10x15x1 (h) m. 3.Steel,horisontal,underground heat insulated tank for entrained oil products of 12.5 m3 with 1 submerged pump of 40 m3/hr capacity, 0.35 MPa.head 4.Drainage tank V=25 m3, similar to p.3	pcs. pcs. pcs.	1 1 1	-"-	

Nos.	Description	Technical characteristics	Units	Q-ty	Completion of construction % of development	Notes
		5. Steel, vertical, above ground, heated, heat insulated static settling tank of 700 m3 capacity	pcs.	3		
		6. Accumulating tank of V=5000 m3, similar to p.5	pcs.	2		
15.	Slime drying beds	2 pits. each of 15x15x1 (h) m.			-"-	
16.	Pump station of treated effluents	Capacity - 120 m3/hr Head - 1.65 MPa, pumps: 2 operating and 1 stand-by Prefabricated box-shaped module 12x6x5.4 (h) m. Automatic operation mode. One-story building Dimensions in plan of 12.4x 6.4 m Height - 4.2 m Cubic content - 333 m3 Construction area - 79 m2 Frame -steel Fencing constructions - wall metal three-layered panels with mineral heat insulation	pcs.	1	-"-	

1281

Nos.	Description	Technical characteristics	Units	Q-ty	Completion of construction % of development	Notes
17.	Sewage pump station of industrial and rainwater effluents	2 pumps (1+1) of explosion proof design. Capacity - 90 m3/hr. Head - 0.5 MPa 2 (1+1) auxiliary pumps of explosion proof design. Capacity - 7.2 m3/hr Head - 0.6 MPa 3 prefabricated box-shaped modules: 1.board room of 3x3x3 (h) 2.receiving tank aboveground part- 3x3x3 (h) m underground part- 3x3x6.64(h)m 3.computer hall: underground part- 3x3x6.64(h)m above ground part-3x3x3.5(h)m Embedded part of construction: Constructons-rectangular steel modules Dimensions in plan - 3.0x3.0 m Depth - 6.5 m Above ground part: Dimensions in plan - 3.0x3.0 m Height - 3.0 m	pcs.	1	-"-	

Nos.	Description	Technical characteristics	Units	Q-ty	Completion of construction % of development	Notes
		Constructions-steel three-layered panels with mineral wool heat insulation				
18.	Sewage pump station of industrial and rainwater effluents	4 (3+1) main pumps: Capacity - 280-500 m3/hr. Head - 0.46 MPa 2 (1+1) auxiliary pumps of explosion proof design. Prefabricated sewage pump station includes: 1.board room of 12x3x3.8 (h) m 2.steel underground tank of 3.4 m diameter,of 22.86m length Depth of supplying sewer installation - 5 m. 3.Sewage pump station: above ground part - - 12x3x3.8 (h) m underground part - - 12x3x8.5 (h) m. One-story building: Dimensions in plan - 12.4x6.4m Height - 4.2m Cubic content - 333 m3 Construction area - 79 m2	pcs.	1	-"-	

183

1284

Nos.	Description	Technical characteristics	Units	Q-ty	Completion of construction % of development	Notes
		Frame - steel Fencing constructions - steel metal three-layered panels with mineral wool heat insulation				
19.	Intrasite industrial and fire water supply system	Steel pipes:				
		diameter - 50 mm	m	400	-"-	
		diameter - 80 mm	m	220		
		diameter - 100 mm	m	1200		
		diameter - 150 mm	m	3000		
		diameter - 200 mm	m	600		
		diameter - 250 mm	m	2300		
		diameter - 300 mm	m	200		
		diameter - 350 mm	m	100		
		diameter - 400 mm	m	30		
		diameter - 500 mm	m	100		
		Highly reinforced insulation. Depth of pipes installation- - 4.4 m.Outside fire fighting of buildings is provided by fire hydrants. Fire fighting of outdoor process units - by fire hydrants and water guns (20 pcs.)				

Nos.	Description	Technical characteristics	Units	Q-ty	Completion of construction % of development	Notes
		Water consumption - 170 l/sec. Metal consumption of II Stage wells - 40 t. Soils are water saturated. Sand is dusty. Open water discharge and trench fastening (partial) are used.				
20.	Intrasite sanitary water supply system	Steel pipes. Conditions for pipes installation are similar to No.19			-"-	
		diameter - 50 mm	m	600		
		diameter - 80 mm	m	220		
		diameter - 100 mm	m	600		
		diameter - 150 mm	m	1000		
		diameter - 250 mm	m	90		
		diameter - 300 mm	m	150		
		diameter - 350 mm	m	300		
		Metal capacity of II Stage wells - 10 t.				

Nos.	Description	Technical characteristics	Units	Q-ty	Completion of construction % of development	Notes
21.	Intrasite industrial and rainwater sewarage	Depth of installation is from 3.6 to 5 m. Installation conditions are similar to water supply systems.			-"-	
		Steel pipes with highly reinforced insulation				
		diameter - 100 mm	m	50		
		diameter - 200 mm	m	250		
		diameter - 250 mm	m	50		
		diameter - 300 mm	m	100		
		diameter - 400 mm	m	100		
		diameter - 500 mm	m	30		
		diameter - 600 mm	m	20		
		Discharge cast iron pipes:				
		diameter - 100	m	50		
		diameter - 200	m	3200		
		diameter - 250	m	600		
		diameter - 300	m	1200		
		diameter - 400	m	900		
		Matal capacity of II Stage wells makes up 200 t.				

Nos.	Description	Technical characteristics	Units	Q-ty	Completion of construction % of development	Notes
22.	Intrasite sanitary sewarage	Depth is from 3.6 up to 5.5 m. Installation conditions are similar to water supply sytem. Steel pipes with highly reinforced insulation:			-"-	
		diameter - 150 mm	m	30		
		diameter - 200 mm	m	30		
		diameter - 350 mm	m	30		
		diameter - 400 mm	m	20		
		Discharge cast iron pipes				
		diameter - 150 mm	m	1300		
		diameter - 200 mm	m	500		
		Metal capacity of II Stage steel wells	t	5.0		
23.	Discharge sewer of treated effluents	It is made of steel pipes with highly reinforced insulation, installed in ground at the depth of 2.5 m in cushioning layer of 2 m. The pipe of 150 mm diameter partially runs through bog at the depth of 4 m.	km	24.0	-"-	

1267

1288

Nos.	Description	Technical characteristics	Units	Q-ty	Completion of construction % of development	Notes
24.	Biological treatment station of sanitary effluents	Capacity - 200 m3/day.Completely prefabricated.	pcs.	1	-"-	
25.	Skid mounted tanks	Consists of: 1. 4 steel tanks installed above ground,heated,with heat insulation ,V=10 m3 2. 1 pump of 10 m3/hr. capacity and of 0.1 MPa head. Prefabricated skid of 11.2x 3.12x3.24 (h) m.			-"-	

1.2. Gubkinsky GPP. III+IV Stages.
1. Construction Site Preparation.

Nos.	Description	Technical characteristics	Units	Q-ty	Completion of construction % of development	Notes
		Gubkinsky GPP. 3d Stage of Construction.				
1.	Felling	Trees of cone-bearing and broad-leaved species, up to 20m high, trunk dia. up to 0.2m	pcs.	7800	1990 / 100%	
2.	Peat removal from swamped areas	Peat, very rotten, extremely moistened, peat occurrence up to 2.0m deep	m3	2700	ditto	
3.	Soil addition on site for surface drainage	Soil for addition is transfered from soil and artificial pits, produced by hydraulic filling. The thickness of soil addition does not exceed 2.0m	m3	135000	ditto	

1249

Nos.	Description	Technical characteristics	Units	Q-ty	Completion of construction % of development	Notes
4.	Internal motor roads	Cross section-with shoulders, subgrade of up to 9.0m wide, roadway of up to 6.0m; pavement design of two types: precast reinforced concrete wheel track of northern design, of 6x2x0.14m dimension, on sand and gravel mix base, and pavement of sickle-shaped profile from sand and gravel mix of 0.2m thick along axis	pcs. m2	1350 1300	project	r/c track (slabs) 6x2x1.4m pavement area
5.	Foot paths	Precast reinforced concrete wheel track, slabs of 0.5x0.5x0.07m dimension	m2	250	project	
		Gubkinsky GPP. 4th Stage of Construction				
6.	Felling	Trees of cone-bearing and broad-leaved species, up to 20m high, trunk dia. up to 0.2m	pcs.	1100	project	

Nos.	Description	Technical characteristics	Units	Q-ty	Completion of construction % of development	Notes
7.	Peat removal from swamped areas	Peat, very rotten, extremely moistened, peat occurence up to 2.0m deep	m3	350	ditto	
8.	Soil addition on site for surface drainage	Soil for addition is transfered from soil and artificial pits, produced by hydraulic filling. The thickness of soil addition does not exceed 2.0m. Soil is laid into fill with multi-layer consolidation	m3	125000	ditto	
9.	Internal motor roads	Cross section-with shoulders, subgrade of up to 9.0m wide, roadway of up to 6.0m, pavement design of two types: precast reinforced concrete slabs of northern design, of 6x2x0.14m dimension, on sand and gravel mix base, and pavement of sickle-shaped profile from sand mix of 0.2m thick along axis	pcs. m2	1200 1300	ditto	r/c slabs 6x2x0.14 pavement area

129

1292

Nos.	Description	Technical characteristics	Units	Q-ty	Completion of construction % of development	Notes
10.	Foot paths	Pavement of precast reinfoced concrete slabs, 0.5x0.5x0.07m dimension	m2	250	ditto	

1.2. Gubkinsky GPP. III+IV Stages
II. Main Construction Facilities

Nos.	Description	Technical characteristics	Units	Q-ty	Completion of construction % of development	Notes
		Gubkinsky GPP. 3d Stage of Construction				
1.	Oil and condensate separation unit	Oil and condensate separator V=237m3	pcs.	2	project	
		Equipment weight	t	112		
2.	Compressor building. Outside equipment and dehydration	The process is analogical to the 2nd stage Civil engineering part: Single-story building with additional building. Machine room, dimensions in plan - 60.4x24.4m Additional building,dimensions in plan - 9.4x24.4 Machine room height - 15.4m, Additional building height - 6.5m Cubic content - 24000m3 Area of structure - 1700m2 Frame - steel Space enclosing structures - wall metal three-layers panels with mineral wool heat insulation			ditto	

Nos.	Description	Technical characteristics	Units	Q-ty	Completion of construction % of development	Notes
3.	Low temperature condensation with turbo-expander. Refrigeration compressor building	The process is analogical to the 2nd stage. Civil engineering part: Single-story building with additional building. Compressor building, dimension in plan - 42.4x18.4m Additional building, dimension in plan - 6.4x18.4m Height: Compressor room - 10m Additional building - 5.5m Cubic content - 8450m3 Area of structure - 898m2 Frame - steel Space enclosing structures - wall metal three-layers panels with mineral wool heat insulation			ditto	
4.	CCR No.3	Separately standing building is located in explosion-hazadous area (as per PUE-86) Two-storied building is provided with the following:			ditto	

Nos.	Description	Technical characteristics	Units	Q-ty	Completion of construction % of development	Notes
		- forced ventilation with 5-multiple air change; - air conditioning system for computer rooms and constantly attended rooms (volume of conditioning 2000m3 - gas fire-fighting system for buildings with distribution control system equipment Dimension in plan - 30.8x24.8m Height of the building - 12.5m Cubic content - 9548m3 Area of structure - 764m2 Frame - steel Space enclosing structures - wall light-concrete panels				
5.	Utility pipelines. Site No.10	Total length of Site No.10 - 3615m Including: 1.Two-tiers piperack on high posts with span structures, of 6m wide of 540m long span length - 510m			ditto	

1296

Nos.	Description	Technical characteristics	Units	Q-ty	Completion of construction % of development	Notes
		2.Two-tiers piperack on high posts with span structures, of 8m wide of 66m long span length - 66m				
		3.Single-tier piperack on separately standing posts, of 2 through 5m high of 6m wide of 170m long				
		4.Ditto of 4m wide of 545m long				
		5.Ditto of 3m wide of 290m long				
		6.Ditto of 2.4m wide of 90m long				
		7.Ditto of 1.2m wide of 1685m long				
		8.Ditto of 0.6m wide of 295m long				

Nos.	Description	Technical characteristics	Units	Q-ty	Completion of construction % of development	Notes
		Posts and span structures are metal along total length of site. 70% of piperack length is combined with electric and instrumentation cables. Total metal consumption (weight of pipes, pipe details and valves without structures and cables) is 1410t				
6.	Utility pipelines. Site No.11	Total length of the site - 1415m 1.Two-tiers piperack on high posts with span structures, of 2.4m wide of 815m long span length - 815m 2.Single-tier piperack, of 3 through 9m high of 2.4m wide of 194m long 3.Ditto of 1.5 through 3m high with span structure, of 1.8m wide of 80m long span structure length - 18m			ditto	

127

1298

Nos.	Description	Technical characteristics	Units	Q-ty	Completion of construction % of development	Notes
		4.Single-tier piperack on separately standing posts, of 1 through 3m high of 1.2m wide of 275m long 5.Ditto of up to 1m high of 0.6m wide of 51m long Posts and span structures are metal along total length of site. 50% of piperack length is combined with electric and instrumentation cable. Total metal consumption of the site (weight of pipes, pipe details and valves without structires and cables) is 68.7t				
7.	Flare system	LP separator HP separator Underground tank Condensate tank Total weight of condensate Total weight of equipment	pcs. pcs. pcs. pcs. t	1 1 1 1 31.31	ditto	

Nos.	Description	Technical characteristics	Units	Q-ty	Completion of construction % of development	Notes
		HP flare stack D=0.8m, H=65m LP flare stack D=1.0m, H=100m				
7a	Instrumentation network. Dispatching	Panel systems on the base of pneumatic and electronic instruments and electronic relays. Panels - 6 Cables - 17500 Analog inputs - 20 Discrete inputs - 220 Discrete outputs - 140			ditto	
		4th stage				
8.	Compressor building. Outside equipment and dehydration	Process is analogical to the 1st stage Compressor building: Single-story building with additional building Dimensions in plan: Compressor building- 84.6x246m Additional building- 9.6x24.4m Height:			ditto	

124

Nos.	Description	Technical characteristics	Units	Q-ty	Completion of construction % of development	Notes
		Compressor building - 15.6m Additional building - 6.5m Cubic content - 33985m3 Area of structure - 2315m2 Frame - steel Space enclosing structures - wall three-layers metal panels with mineral wool heat insulation. Pump house: Single-story building Dimensions in plan - 18.4x6.4m Height - 6.5m Cubic content - 765m3 Area of structure - 118m2 Frame - steel Space enclosing structures - wall three-layers metal panels with mineral wool heat insulation				
9.	Low temperature condensation with turbo-expander.	Process is analogical to the 1st stage Civil engineering part: Single-story building Dimensions in plan- 48.4x18.4m Height - 10.5m			ditto	

Nos.	Description	Technical characteristics	Units	Q-ty	Completion of construction % of development	Notes
	Refrigeration compressor building	Cubic content - 9350m3 Area of structure - 890m2 Frame - steel Space enclosing structures - wall three-layers metal panels with mineral wool heat insulation				
10.	CCR No.4	Separately standing building is located in explosion hazardous area (as per PUE-89). Two-storied building is provided with the following: -forced ventilation with 5-multiple air change, -gas fire-fighting system of buildings (indoor and underfloor space) with control system equipment, -air conditioning system of computer rooms and constantly attended rooms (volume of conditioning - 2000m3) Dimensions in plan- 30.8x24.8m Height of building - 12.0m Cubic content - 8088m3 Area of structure - 674m2 Frame - steel Space enclosing structures - wall light concrete panels			ditto	

130

1302

Nos.	Description	Technical characteristics	Units	Q-ty	Completion of construction % of development	Notes
11.	Utility pipelines. Site No.12	Total length of the site - 850m Including: 1.Two-tiers piperack on high posts with span structures, of 8m wide, of 210m long span structure length - 55m 2.Single-tier piperack on separately standing posts, of 1.5m high of 6m wide of 45m long 3.Ditto of 7m high of 4m wide of 300m long 4.Ditto of 3 through 5m high of 3m wide of 7m long 5.Ditto of 1.5m high of 1.8m wide of 200m long			ditto	

Nos.	Description	Technical characteristics	Units	Q-ty	Completion of construction % of development	Notes
		6.Ditto of 0.6m wide of 25m long Posts and span structures are metal along total length of site. 50% of piperack length is combined with electric and instrumentation cables. Total metal consumption of the site (weight of pipes, pipe details and shut-off valves without structures and cables) is 440t				
12.	Utility pipelines. Site No.13	Total length of the site- 247m Separately standing posts, of up to 8m high of 2.4m wide with span structure - 12m Total length - 235m Span structure length- 12m All posts and span structures are metal. Total weight (without weight of structures and cables) is 16.25t			ditto	

1303

Nos.	Description	Technical characteristics	Units	Q-ty	Completion of construction % of development	Notes
13.	Flare system	Analogically to the 3d stage			ditto	
14.	Instrumentation networks Dispatching	Panel systems on the base of pneumatic and electronic relay Panels - 7 Cables - 20000 Analog inputs - 25 Discrete inputs - 200 Discrete outputs - 140			ditto	
15.	Reagent facilities, 3d stage	Volume V=50m3 for compressor oil Gear-type oil pump Installed power Total weight	pcs. pcs. kW t	1 1 0.55 3.512	ditto	
16.	Intermediate emergency process tanks	Volumes V=100m3 K.O.Drum Underground sump Pump for broad cut of light hydrocarbons Total equipment weight Installed power of pump motor	pcs. pcs. pcs. pcs. t kW	6 1 1 1 154.165 90	ditto	

1.2. Gubkinsky GPP. III+IV Stages.
III. Auxiliary and Servicing Facilities

Nos.	Description	Technical characteristics	Units	Q-ty	Completion of construction % of development	Notes
		Gubkinsky GPP. 3d and 4th Stages of Construction				
1.	Administration building Rentable area 720m2, with buffet for 36 persons	Two-storied building Dimensions in plan 31.0x13.0 Height - 6.7m Cubic content - 2700m3 Area of structure - 403m2 Frame - steel Space enclosing structures - wall light concrete panels			-"- 15%	
2.	Electrical workshops	It is used to perform current maintenance of electrical equipment in GPP. Single-story building with additional building. Dimensions in plan: - High part - 36.6x18.4 - Additional building - 15.5x18.4m Height: - High part - 12.5m - Additional building - 4.5m			project	

305

Nos.	Description	Technical characteristics	Units	Q-ty	Completion of construction % of development	Notes
		Cubic content - 9600m3 Area of structure - 950m2 Frame - steel Space enclosing structures - wall three-layers metal panels with mineral wool heat insulation.The workshop is equipped with 5 metal cutters, electric heater for motor winding drying,winding equipment and auxiliary equipment and hoists(1 electric overhead crane of 3.2 t/f load capacity and 1 electric overrunning crane of 16/ 3.2tf load capacity), necessary to repair the equipment of gas processing plants				
3.	Air compressor building. Expansion.	Air compressor Compressor weight Compressor motor power Discharge pressure Air dehydration unit (air dew point - minus 70C) Single-story building Dimensions in plan - 9.2x12.4m	pcs. t kW MPa	1 5.76 132 0.8	-"-	

Nos.	Description	Technical characteristics	Units	Q-ty	Completion of construction % of development	Notes
		Height - 7.2m Cubic content - 822m3 Area of structure - 114m2 Frame - steel Space enclosing structures - wall three-layers metal with mineral wool heat insulation Outside area: Air receiver V=25m3 Total equipment weight (without compressor) Installed power without compressor	 pcs. t kW	 3 22.47 42		
4.	Solvent and inhibitor storage	Capacity V=25m3 Capacity V=50m3 Pump Installed power Total weight of equipment	pcs. pcs. kW t	2 2 2.2 10.52	-"-	
5.	Nitrogen storage in tanks Expansion.	Air cooler Demineralized water pump Installed power Total weight	pcs. pcs kW t	1 1 34 13.32	-"-	

1327

Nos.	Description	Technical characteristics	Units	Q-ty	Completion of construction % of development	Notes
6.	Long-term goods storage (storage area - 200m2)	Half-buried building with embankment Dimensions in plan 18.8x12.8m Height 3.4m Cubic content - 818m3 Area of structure - 240m2 Structures - monolithic reinforced concrete			-"-	
7.	Fencing (3d stage)	Length - 3710m Height - 2.0m Structures - steel grid along reinforced concrete posts			-"-	
8.	Fencing (4th stage)	Length - 510m Height - 2.0m Structures - steel grid along reinfoced concrete posts			-"-	
9.	Training centre with hostel for 150 persons	Two-storied building Dimensions in plan- 31.0x13.0m Height of building - 6.7m Cubic content - 92700m3 Area of structure - 403m2 Frame - steel Space enclosing structures - wall light concrete panels			-"-	

Nos.	Description	Technical characteristics	Units	Q-ty	Completion of construction % of development	Notes
10.	Greenhouse. Rentable area 300m2	Arch-type structure Dimension - 104.0x30.5m Height - 9.7m Area of structure - 31720m2 Cubic content - 15150m3			-"-	
	Greenhouse. Auxiliary building	Single-story building Dimensions in plan- 19.1x43.2m Height - 3.3m Cubic content - 2150m3 Area of structure - 830m2 Frame - steel Space enclosing structures - light concrete panels				
11.	Pig sty for 200 pigs	Single-story building Dimensions in plan - 30.8x24.8 Height - 6.5m Cubic content - 4965m3 Area of structure - 170m2 Frame - steel Space enclosing structures - wall light concrete panels			-"-	

1309

1310

1.2. Gubkinsky GPP. III+IV Stages
IV. Power Facilities

Nos.	Description	Technical characteristics	Units	Q-ty	Completion of construction % of development	Notes
		Gubkinsky GPP. 3d and 4th Stages of Construction				
1.	External power supply	Substation with two transformers of 220/10kV,100MVA each, with split winding on 10kV side. On 220kV side oil switches are provided (analogically to substation on 220/10kV for the 1st and 2nd stages of Gubkinsky GPP). Substation on 220/10kV is connected by two branches to two air lines of 220kV, feeding substation on 220/10kV of the 1st and 2nd stages, Gubkinsky GPP. For this there provided a site with two air lines on 220kV, on metal posts. Each air line-220kV of this site is 0.4km long			Project	

Nos.	Description	Technical characteristics	Units	Q-ty	Completion of construction % of development	Notes
2.	Indoor switchgear No.2	Switchgear on 10kV for the 3d and 4th stages of Shubkinsky GPP is analogical to switchgear on 10kV for the 1st and 2nd stages of the plant			ditto	
3.	Special distributing point on 10kV	Distributing point on 10kV in box-shaped module of 27x6m dimension Distributing point on 10kV is feeded by two cable lines of 10kV, each of 80m long, by means of iso-type transformers of 10/10kV, of 2500kVA power from indoor switchgear of10kV, 1st and 2nd stages of GPP. Rated current of collecting buses for I-II sections of distributing point on 10kV is 630A. Complete distributing point on 10kV consists of 18 cabinets, including: -cabinets with oil switches - 11pcs. -cabinets with arrestors- 2pcs			ditto	

1312

Nos.	Description	Technical characteristics	Units	Q-ty	Completion of construction % of development	Notes
		-cabinets with voltage transformers - 2pcs. -cabinets with fuses - 2pcs. -cabinets with isolators - 1pc In box-module of distributing point on 10kV there are 2 transformers for own needs on 10/0.4kV, of 40kVA power and control station panel of 0.4kV consisting of 1 board with 10 automatic switches.				
4.	Intrasite networks of power supply, 3d stage	Intrasite power supply includes power supply of high voltage motors of gas treatment unit No.3 and transformer substations of 10/0.4kV in CCR No.3. There provided radial circuit of power supply and cable networks. Cable laying is provided mainly on cable racks as well as on the racks combined with the process piperacks. To separate receivers cable is laid in trench, underground, on small areas.			ditto	

Nos.	Description	Technical characteristics	Units	Q-ty	Completion of construction % of development	Notes
		Cable articles: -power cable, 10kV - 11km -power cable, up to 1kV - 8km -control cable - 8km -conductor copper,flex, bare (for earthing) - 10kg There provided lighting, earthing and lightning protection in all buildings and outdoor installations				
5.	Intrasite networks of power supply, IV stage	This project includes power supply of high voltage motors of gas treatment unit No.4, transformer substations on 10/0.4 kV in CCR No.4,networks to them, and external lighting of gas treatment unit No.4 area. Radial circuit of power supply and cable networks are provided. Cables are laid on cable racks as well as on the racks combined with process piperacks. To separate recievers cable is laid in trench, underground, on small areas.			ditto	

1343

Nos.	Description	Technical characteristics	Units	Q-ty	Completion of construction % of development	Notes
		Cable articles: -power cable, 10kV - 14km -power cable, up to 1kV - 10km -control cable - 12km -conductor copper, flex, bare (for earthing) - 16kg For external lighting of gas treatment unit No.4 area there provided 2 floodlighting masts. 1 lighting fixture with xenon lamp of 20kW and 8 floodlights with incandescent lamps are installed on each mast. There provided lighting, earthing and lightning protection in all buildings and outdoor installations				

1.2. Gubkinsky GPP. 1st and 2nd Stages
V.Transport Facilities and Communication

Nos.	Description	Technical characteristics	Units	Q-ty	Completion of construction % of development	Notes
		Gubkinsky GPP. 3d Stage				
1.	Fire and guard alarm systems	- Telephone cable with copper cores, of 0.5mm dia., with air and paper insulation, in lead sheath, with protective coating, of 10x2 capacity	km	0.8	project	
		- Receiving and monitoring instrument, fire and guard, for 1 circuit with transmitters of guard alarm system, with power supply source	set	1		
		- Receiving and monitoring instrument, fire and guard, of up to 60 circuits capacity	set	1		
		- Control cable with 4 copper cores, with insulation and PVC plastic sheath of 1.0mm2 cross-section of cores	km	3.5		

316

Nos.	Description	Technical characteristics	Units	Q-ty	Completion of construction % of development	Notes
2.	Intrasite communication networks	- Telephone cable with copper cores, of 0.5mm dia., with air and paper insulation in lead sheath, with protective coating, of 10x2 capacity, and installation materials	km	6.0		
		- Control cable with 4 copper cores, with insulation and PVC plastic sheath:				
		of 0.75mm2 cross section of cores	km	0.95		
		of 1.5mm2 cross section of cores	km	0.5		
		- Radio cable to two copper cores, of 1.2mm dia, screened, armoured with steel ribbon	km	1.0		
		- Amplifier of 100W power for paging, complete with microphone, horn loud-speakers (about 10pcs.), power supply source	set	1		

Nos.	Description	Technical characteristics	Units	Q-ty	Completion of construction % of development	Notes
3.	Intrasite communication networks	- Control cable with 4 copper cores, insulation and PVC plastic sheath, protective coating for cable laying on cable racks:			project	
		cross section of cores - 0.72mm2	km	0.7		
		cross section of cores - 1.5mm2	km	0.15		
		- Telephone cable with copper cores of 0.5mm dia., with protective coating of 10x2 capacity	km	2.2		
		- Radio cable with 2 copper cores of 1.2mm dia.,screened armoured with steel ribbons	km	0.4		
		- Amplifier of 100W power for paging, complete with microphone, horn loud-speakers (about 10 pcs.), power supply source	set	1		
4.	Intrasite communication networks	- Communication cable, single-quadded, with copper cores of 0.9mm dia., with PE insulation for laying in soil and on structures	km	5.70	project	

157

Nos.	Description	Technical characteristics	Units	Q-ty	Completion of construction % of development	Notes
		- Digital system of transmission through cable communication lines without amplifying point, of 15 channels capacity	set	1		
5.	Fire and guard alarm system	- Receiving and monitoring instrument of fire alarm, up to 60 circuits	set	1	project	
		- Receiving and monitoring instrument of guard alarm, up to 2 circuits	set	1		
		- Telephone cable with copper cores of 0.5mm dia., with air and paper insulation in lead sheath, with protective coating for laying on steel structures of cable racks, of 10x2 capacity	km	0.5		
		- Control cable with PVC insulation, with 4 copper cores of 1.0mm2 cross section	km	1.2		

1.2. Gubkinsky GPP. III+IV Stages

VI.External Networks and Facilities of Water Supply, Sewerage, Heat Supply and Gas Supply Systems

Nos.	Description	Technical characteristics	Units	Q-ty	Completion of construction % of development	Notes
1.	Heat-carrier heating unit	Ditto, as the 1st and the 2nd stages	pcs.	2	project	
2.	Sewerage pump station for Plant rain effluents with regulating tank	Single-storey building. Dimensions in plan - 12.4x6.4 eight - 4.5m Cubic content - 357m3 Area of structure - 80m2 Frame - steel Space enclosing structures - wall three-layers metal panels with mineral wool heat insulation Pump house capacity - 280 through 400m3/h,head- 0.46MPa. There are 4 pumps of explosion proof design (3 working and 1 stand-by). Auxiliary pumps (1 working and 1 stand-by), of 7.2m3/h capacity, head - 0.5MPa,of explosion-proof design.	pcs.	1		

1349

Nos.	Description	Technical characteristics	Units	Q-ty	Completion of construction % of development	Notes
		Regulating tank (with feeding header of 5m deep) - steel horizontal underground sump, of 3.4m dia., and of 22.86m long.				
3.	Sewerage pump station for sewage effluents	Analogical to sewerage pump station for sewage effluents of the 1st and the 2nd stages	pcs.	2		
4.	Water supply and sewerage networks	Analogical to intrasite water supply and sewerage networks, 1st and 2nd stages				
5.	Fire water tank, of 250m3 capacity	Analogical to fire water tank, 1st and 2nd stages	pcs.	2		
6.	Expansion of Plant boiler house for the 3d stage	Expansion of production building of boiler house by 6.0m. Main equipment: - steam boiler of 16t/h capacity, P=1.4MPa	pcs.	1	project	

Nos.	Description	Technical characteristics	Units	Q-ty	Completion of construction % of development	Notes
		- cast iron economizer, packaged, F=330.4m2	pcs.	1		
		- Fan, Q=14650m3/h,H=278mm H2O N=15kW	pcs.	1		
		- Smoke exhaust fan, Q=27650m3/h, H=276mm H2O, N=45kW	pcs.	1		

1521

1.3. Tarasovsky GPP, 1st Stage.
I. Construction Site Preparation

Nos.	Description	Technical characteristics	Units	Q-ty	Completion of construction % of development	Notes
1.	Felling	Trees of cone-bearing and broad-leaved species, up to 20m high, trunk dia. - up to 0.2m	pcs.	18500	1990 / 100%	
2.	Soil addition on the site for surface drainage	Soil for addition is transfered from ground pit, the thickness of addition does not exceed 2.0m. Soil is laid in fill by multi-layer consolidation	m3	400000	-"- / 70%	
3.	Internal motor roads	Cross-section - with shoulders Subgrade - up to 9.0m wide Roadway - up to 6.0m wide Pavement design- of two types: -precast reinforced concrete wheel track of northern design (r/c slabs of 6x2x0.14m dimension) on the sand base, -pavement of sickle-shaped profile, from sand and gravel mix of 0.2m thick along axis	pcs. m2	4300 12500	-"- / 20%	1. r/c slabs- 6x2x x0.14m 2. pavement area from sand & gravel mix

Nos.	Description	Technical characteristics	Units	Q-ty	Completion of construction % of development	Notes
4.	Footpaths	Pavement - precast reinforced concrete slabs of 0.5x0.5x0.07m dimension	m2	2600	-"-	
5.	Access and intrasite motor roads	Cross-section - with shoulders Subgrade - up to 10.0m wide Roadway - up to 6.0m wide Pavement - precast reinfoced concrete slabs of northern design (6x2x0.14m), sand base with filter bed of nonwoven sinthetic material between slabs and base. Soil volume of subgrade for 1km is up to 25000m3	km pcs.	1.5 750	1990 100%	1.Both motor roads length 2.r/c slabs-6x2x0.14m

1523

1324

1.3. Tarasovsky GPP. 1st Stage
II. Main Construction Facilities

Nos.	Description	Technical characteristics	Units	Q-ty	Completion of construction % of development	Notes
1.	Preliminary separation unit	Oil and condensate separator, V=237m3	pcs.	3	project	
		Tank V=100m3	pcs.	1		
		Gas pressure, P=0.22MPa				
		Total weight	t	141.5		
2.	Unstripped gas compressor building	Inside the building:			project	
		Centrifugal compressor	pcs.	5		
		Motor power	kW	12500		
		Capacity	m3/min.	1250		
		Suction pressure, P=0.157MPa				
		Discharge pressure, P=3.63MPa				
		Regeneration gas screw compressor	pcs.	2		
		Capacity	m3/min.	18		
		Motor power	kW	800		
		Suction pressure, P=2.6MPa,				
		Discharge pressure, P=3.7MPa				
		Total installed power	kW	64100		
		Total weight of compressors	t	677.2		

Nos.	Description	Technical characteristics	Units	Q-ty	Completion of construction % of development	Notes
		Outdoors:				
		Separators, hydrocarbon condensate tanks, air coolers for oil and gas of the 1st and 2nd compression stages, adsorbers of gas dehydration and condensate.				
		Regeneration gas heater Power	mW	5.28		
		Sumps, filters of dried gas, regeneration gas, cooling gas; inhibitor preparation and injection unit.				
		Tight pumps for LHG(liquefied hydrocarbon gas)				
		Weight of equipment (without compressors)	t	1837.48		
		Air coolers	pcs.	18		
		Total installed power of air coolers	kW	1549.5		
		Pumps	pcs.	13		
		Total installed power of pump motors	kW	103.9		
		Single-storey building with additional building				
		Dimensions in plan:				

1556

326

Nos.	Description	Technical characteristics	Units	Q-ty	Completion of construction % of development	Notes
		Compressor room - 84.2x25.0m Additional building- 6.4x25.0m Height of compressor room - 15.1m Height of additional building- 6.5m Cubic content - 31925m3 Area of structure - 2265m2 Frame - steel Space enclosing structures - three-layers metal panels with mineral wool heat insulation				
3.	Low-temperature condensation section with turbo-expander	Outdoors: Demethanizer Deethanizer Shell and tube heat-exchangers, plate heat-exchangers, tanks, separators, columns, sumps, air coolers of gas and oil, propane condensers, propane receivers, propane tanks, propane evaporators, box-modules of turbo-expanders, column evaporators.	 pcs. pcs.	 1 1	-"-	

Nos.	Description	Technical characteristics	Units	Q-ty	Completion of construction % of development	Notes
		Indoors:				
		Propane refrigeration turbo-compressor	pcs.	2		
		Refrigerating capacity	kW	6978		
		Motor power	kW	6300		
		Booster centrifugal compressor	pcs.	3		
		Suction pressure, P=1.6MPa				
		Discharge pressure, P=7.45MPa				
		Capacity	m3/min.	1400-1800		
		Motor power	kW	12500		
		Auxiliary compressor	pcs.	1		
		Motor power	kW	75		
		Single-storey building with additional building				
		Dimensions in plan:				
		Compressor building-99.4x18.4m				
		Additional building- 6.4x18.4m				
		Height:				
		Compressor building - 11.0m				
		Additional building - 6.5m				
		Cubic content - 21000m3				
		Area of structure - 2000m2				
		Frame - steel				
		Space enclosing structures - three-layers metal panels with mineral wool heat insulation				

1527

Nos.	Description	Technical characteristics	Units	Q-ty	Completion of construction % of development	Notes
		Pump house:				
		Centrifugal oil pumps, tight pumps for LHG	pcs.	15		
		Total installed power of pump motor	kW	1184.75		
		Air coolers	pcs.	12		
		Total installed power of air coller motor	kW	2112		
		Total weight of equipment (without compressors)	t	2004.775		
		Total installed power of compressors motor	kW	50100		
		Total weight of compressors	t	677.2		
4.	CCR	Separately standing building is located in explosion hazardous area (as per PUE-86) Single-storey building is provided with: -Forced ventilation with 5-multiple air change, -Air conditioning system of computer rooms and constantly attended rooms, -gas fire-fighting system for rooms with control system equipment			-"-	

Nos.	Description	Technical characteristics	Units	Q-ty	Completion of construction % of development	Notes
		Dimensions in plan-48.8x30.8m Height -varying (4.6...6.05m) Cubic content - 9020m3 Area of structure - 1503m2 Frame - steel Space enclosing structures - light concrete panels				
5.	High purity propane unit	Outdoors: Deethanizer, propane column, evaporators, air coolers, propane tanks Inside the pump house: propane pumps Total weight Air coolers Total installed power of air cooler motor Pumps Total installed power of motors	 t pcs. kW pcs. kW	 67.74 2 6 6 27	-"-	
6.	Area of emergency process tanks	Tanks, V=50m3 K.O.Drums Underground sump Total weight	pcs. pcs. pcs. t	4 1 1 102.42	-"-	

1329

1330

Nos.	Description	Technical characteristics	Units	Q-ty	Completion of construction % of development	Notes
7.	Utility pipelines. Site No.1	Total length of the site- 880m Including: 1. Two-tiers piperack on high posts with span structures, combined with electric cables and instrumentation cables- 250+130m=380m, of 7.2m wide 2. Single-tier piperack on high posts with span structures, combined with electric cables and instrumentation cables- 45m,of 6m wide 3. Single-tier piperack on low separately standing posts. Flare collector on high posts. Piperack is combined with electric cables and instrumentation cables. Piperack width- 7.2m Piperack length- 15m 4. Single-tier piperack on low separately standing posts (two pipes are laid: 1220 and 219). Piperack width- 1.8m Piperack length- 260m			-"-	

Nos.	Description	Technical characteristics	Units	Q-ty	Completion of construction % of development	Notes
		5. Single-tier piperack on low separately standing posts, of 2.4m wide, of 180m long. Posts and span structures-metal (along total length of the site). Total metal consumption of all the site No.1 (880m), (the weight of pipes, pipeline details and pipeline valves without steel structures and cables) - 500t				
8.	Utility pipelines. Site No.1-1	Length of site - 560m Single-tier piperack on low separately standing posts. Flare collector on high posts. Piperack is combined with electric cables and instrumentation cables. Piperack width- 7.2m Structures - metal Total metal consumption of pipes, pipeline details and valves (without steel structures and cables) - 160t			-"-	

1391

Nos.	Description	Technical characteristics	Units	Q-ty	Completion of construction % of development	Notes
9.	Utility pipelines. Site No.2	Total length of the site-1680m Including: 270m - two-tiers piperack with span structures Height: Low tier- 7m High tier- 10m Tie-beam length - 6m 78m- single-tier piperack with span structure Height of piperack- 5m Length of tie-beams- 6m The rest of piperack is of separately standing posts: Height of posts - 1m Length of tie-beams- 1m, 1.5m, 3m, 4.8m, 7.2m Height of posts - 2m Length of tie-beams- 1.5m,7.8m Height of posts - 3m Length of tie-beams - 1.2m Piperack along all the length has a combined laying of both pipes and electric and instrumentation cables.			-"-	posts of span structures are metal

Nos.	Description	Technical characteristics	Units	Q-ty	Completion of construction % of development	Notes
		Metal consumption of utility pipelines (pipes, pipeline details and valves) without metal structures and cables is 243t				
10.	Utility pipelines. Site No.3	Process pipelines of water supply and heating systems and electric networks are laid on low single-tier piperacks. Total length of piperacks - 410m, including: 115m-with tie-beams up to 0.5m wide, 132m-with tie-beams up to 1.5m wide, 7m -with tie-beams up to 3.0m wide, 90m -with tie-beams up to 1.0m wide, 62m -with tie-beams up to 2.0m wide Metal consumption is 20.5t			-"-	Structures are metal Metal consumption is given w/o structures & el.networks

1555

134

Nos.	Description	Technical characteristics	Units	Q-ty	Completion of construction % of development	Notes
11.	Treatment facilities of sewage effluents	Process pipelines of water supply, sewerage and heating systems are laid on low single tier piperacks Total length of piperacks-65m, including: 48m- with tie-beams up to 1.0m wide, 12m- with tie-beams up to 3.0m wide, 5m - with tie-beams up to 1.5m wide Metal consumption is 5.7t. 70% of piperacks are laid together with electric networks			-"-	Structures are metal Metal consumtion is given w/o metal structures & el.networks
12.	Pump house of non-treated effluents	Process pipelines of sewerage and heating systems are laid on low single-tier piperacks. Total length of piperacks - 70m, including: 35m- with tie-beams up to 1.0m wide, 35m- with tie-beams up to 2.2m wide Metal consumption is 5.8t. 50% of piperacks are combined with electric networks.			-"-	Structures are metal Metal consumption is given w/o metal structures & cables

Nos.	Description	Technical characteristics	Units	Q-ty	Completion of construction % of development	Notes
13.	Utility pipelines. Site No.4	Total length - 360m Piperack is made of separately standing posts: 185m- with posts of 1.5m high, and tie-beams of 2.4m long 178m- with posts of 1.2m high, and tie-beams of 1m long Piperack along all the length has a combined laying of pipes and electric cables. Metal consumption of utility pipes (pipes, pipeline details and valves) without steel structures and cables is 20t			-"-	Structures are metal
14.	Utility pipelines. Site No.5	Total length -600m Including: 237m- single-tier piperack with span structures, piperack of 10m high, tie-beams of 6m long 90m - single -tier piperack with span structures, piperack of 10m high, tie-beams of 3m long The rest of piperack is made of separately standing posts: posts of 2m high, tie-beams of 1.2m long			-"-	Structures are metal

1335

1336

Nos.	Description	Technical characteristics	Units	Q-ty	Completion of construction % of development	Notes
		Piperack along all the length has a combined laying of pipes and electric and instrumentation cables Metal consumption of utility pipelines (pipes, pipeline details and valves) without metal structures and cables is 63t				
15.	Utility pipelines. Site No.6	Total length is 830m Piperack is made of separately standing posts. The height of posts is 1.7m through 4m because of rough terrain. The length of tie-beams is 6m Piperack along all the length has a combined laying of pipes and electric and instrumentation cables Metal consumption of utility pipelines (pipes, pipeline details and valves) without metal structures and cables is 93t			-"-	Structures are metal

Nos.	Description	Technical characteristics	Units	Q-ty	Completion of construction % of development	Notes
16.	Utility pipelines. Site No.7	Total length is 340m Including: 70m- single-tier rack with span structures, piperack of 8m high. The length of tie-beams is 3m. The rest of piperack is made of separately standing posts: posts of 1m high, tie-beams of 1m long, posts of 1.5m high, tie-beams of 4m long posts of 2m high, tie-beams of 2m long posts of 4m high, tie-beams of 2.4m long Piperack along all the length has a combined laying of pipes and electrioc and instrumentation cables Metal consumption of utility pipelines (pipes, pipeline details and valves) without metal structures and cables is 41t			-"-	Structures are metal

1338

1.3. Tarasovsky GPP. Ist Stage
III. Auxiliary Facilities

Nos.	Description	Technical characteristics	Units	Q-ty	Completion of construction % of development	Notes
1.	Administration building for 375 persons. Usable floor area- 4000m2 Operating floor area- 3600m2	Five-storied building. Dimensions in plan-66.5x15.5m Storey height is 3.3m Building height is 16.5m Cubic content- 17000m3 Area of structure- 1050m2 Frame- steel Space enclosing structures- light concrete panels			project	
2.	Canteen for 100 persons	Single-storey building. Dimensions in plan 24.8x36.8m Height- 3.0m Cubic content- 2738m3 Area of structure 920m2 Frame- steel Space enclosing structures- light concrete panels			- 14%	

Nos.	Description	Technical characteristics	Units	Q-ty	Completion of construction % of development	Notes
3.	Repairing and mechanical workshop	It is used for maintenance and current repair of process equipment of GPP. Single-storey building Dimensions in plan- 54.4x2.4m Height- 9.0m Cubic content- 12000m3 Area of structure- 1400m2 Frame- steel Space enclosing structures- wall three-layers metal panels with mineral wool heat insulation.The workshop is equipped with seven metal cutters,balancing machine, welding and blacksmith equipment as well as auxiliary equipment and hoists (2 overhead electric cranes, of Q=5t/f each) necessary for repairing the GPP process equipment A concrete area is adjacent to the building of the workshop. It is used for outdoor works. The dimension of concrete area is 54x25m			project	

Nos.	Description	Technical characteristics	Units	Q-ty	Completion of construction % of development	Notes
4.	Vegetable greenhouse with seedling section Usable floor area- 400m2 Greenhouse Auxiliary building	Arch-type building. Dimension in plan- 24.0x28.5m Height- 9.2m Area of structure- 685m2 Cubic content- 3150m3 Single-storey building. Dimensions in plan- 19.1x43.2m Height- 3.3m Cubic content- 2750m3 Area of structure- 830m2 Frame- steel Space enclosing structures- light concrete panels			project	
5.	Vegetable storage place with refrigerator	Single-storey building. Dimensions in plan- 30.8x24.8m Height - 6.5m Usable floor area - 670m2 Operating area - 400m2 Cubic content - 4965m3 Area of structure - 770m2 Frame - steel Space enclosing structures- wall light concrete panels			project	

Nos.	Description	Technical characteristics	Units	Q-ty	Completion of construction % of development	Notes
6.	General shop	Single-storey building. Dimensions in plan- 25.1x31.1m Height- 3.6m Sales area- 150m2 Cubic content -2810m3 Area of structure- 790m2 Frame- steel Space enclosing structures-wall light concrete panels			project	
7.	Equipment depot Passage way	Block-box. Dimensions in plan- 6.0x3.0m Height - 3.0m Space enclosing structures-metal panels with mineral wool heat insulation			project	
8.	Equipment depot Indoor storage	It is used for indoor storage of equipment, supplied by Manufacturing plants. Single-storey building. Dimensions in plan- 66.8x36.4m Height - 7.8m Cubic content - 19000m3 Area of structure- 2450m2 Frame- steel			project	

Nos.	Description	Technical characteristics	Units	Q-ty	Completion of construction % of development	Notes
		Space enclosing structures- wall three-layers metal panels with mineral wool heat insulation.The building is equipped with 4 electric cranes of 5.0t/f load lifting capacity				
9.	Equipment depot Outdoor storage	It is a concrete area, 72x106m dimension, and it is used for outdoor storage of equipment and materials, supplied by Manufacturing plants			- 6%	
10.	Material warehouse	It is used to keep goods and materials for operating needs and GPP equipment reparing. Arch-type building -15x30m The building is equipped with overhead electric crane of 3.2t/f capacity Cubic content- 5300m3 Area of structure - 450m2 Skin- roofing steel sheets on batten Heat insulation- mineral wool plates			- 41%	

Nos.	Description	Technical characteristics	Units	Q-ty	Completion of construction % of development	Notes
11.	Flammable liquids storage	Building - 6x18m Weight of equipment	 t	 1.886	project	
12.	Chemicals storage	Oil tanks, V=50m3 Oil tanks, V=5m3 Antifreeze tank, V=200m3 Antifreeze tank, V=50m3 Inhibitor tank, V=50m3 Kerosine tank, V=50m3 Kerosine tank, V=200m3 Inside the building: Oil regeneration units Block of vacuum oil regeneration Pumps Total installed power of electric motors Total weight of equipment	pcs. pcs. pcs. pcs. pcs. pcs. pcs. pcs. pcs. pcs. kW t	2 2 1 1 2 2 2 2 1 9 32.2 71.45	project	
13.	Methanol storage	Tanks, V=50m3 Pump Total weight of equipment Installed power of pump motor	pcs. t kW	2 8.582 22	project	

Nos.	Description	Technical characteristics	Units	Q-ty	Completion of construction % of development	Notes
14.	Storage for packaged catalysts	It is used for storage of packaged catalysts, necessary for GPP operating needs. Arch-type building- 15x30m It is equipped with overhead electric crane of 3.2t/f capacity Cubic content- 5300m3 Area of structure- 450m2 Skin- roofing steel sheets on batten Heat insulation- mineral wool plates			project	There are two storages of this type
15.	Air compressor building	Air compressors	pcs.	2	project	
		Discharge pressure, P=0.8MPa				
		Capacity	m3/min.	24		
		Compressor motor power	kW	160		
		Air dehydration unit	pcs.	2		
		Tank and pump	kW	367.5		
		Total power				
		Outdoors				
		Air receiver, V=80m3	pcs.	4		
		Total weight of equipment (without compressors)	t	71.165		

Nos.	Description	Technical characteristics	Units	Q-ty	Completion of construction % of development	Notes
16.	Nitrogen and oxygen station	Air compressor Discharge pressure, P=21.6MPa Weight Compressor motor power Total weight of equipment (without compressors) Single-storey building Dimensions in plan- 24.4x12.2m Height- 7.5m Area of structure- 300m2 Cubic content- 2250m3 Frame- steel Space enclosing structures- three-layers metal panels with mineral wool heat insulation	pcs. t kW t	1 3.08 90 15.981	project	
17.	Nitrogen storage	Tank, V=125m3 Pumps Air coolers Total installed motor power Total weight of equipment	pcs. pcs. pcs. kW t	5 2 2 28 498.23	project	
18.	Long-term storage of goods	Storage area- 200m2 Dimensions in plan- 12.6x20.5m Height- 2.4m			project	

Nos.	Description	Technical characteristics	Units	Q-ty	Completion of construction % of development	Notes
		Cubic content- 619m3 Area of structure- 260m2 Structures- monolithic reinforced concrete				
19.	Autopropane warehouse. Autopropane storage. Islands of loading arms. Process block	Tanks, V=25m3 Pumps Total installed power of pump motors Total weight of equipment	pcs. pcs. kW t	3 5 16.4 32.5	project	
20.	Electric repairing workshop	It is used for maintenance and current repair of GPP electric equipment Single-storey building with additional building Dimensions in plan: -high part- 36.6x18.4m -additional building- 15.5x18.4m Height: -high part- 12.5m -additional building- 4.5m			project	

Nos.	Description	Technical characteristics	Units	Q-ty	Completion of construction % of development	Notes
		Cubic content- 9600m3 Area of structure- 950m2 Frame- steel Space enclosing structures- wall three-layers metal panels with mineral wool heat insulation.The building is equipped with 5 metal cutters, electric heater for motor winding drying,winding equipment, as well as auxiliary equipment and hoists(1 electric overhead crane of 3.2t/f capacity and 1 electric overrunning crane of 16/3.2t/fcapacity), necessary to repair GPP electric equipment				

1340

1.3. Tarasovsky GPP. Ist Stage
IV. Power Facilities

Nos.	Description	Technical characteristics	Units	Q-ty	Completion of construction % of development	Notes
1.	External power supply				project	
	Air line on 220kV from Tarko-Sa Tarko-sale substation	Length - 70km Supports- metal The route goes through swamped tundra. The type of foundation is a pile one.				
	Ditto from Severnaya substation	Length - 15km				
	Expansion of Tarko-Sale substation	Transfer of single sectionalized bus system on 220kV of substation into double sectionalized bus system with transfer bus systems. The quantity of air lines on 220kV to be connected (line cells) is 15				

Nos.	Description	Technical characteristics	Units	Q-ty	Completion of construction % of development	Notes
2.	Expansion of Severnaya substation	Transfer of single sectionalized bus system on 220kV of substation into double sectionalized bus system with transfer bus systems. The quantity of line cells is 7			-"-	
3.	Outdoor switchgear on 220kV Tarasovsky GPP	Single sectionalized bus system on 220kV with entry of one air line for each section, with installation of circuit breakers on 220kV at the entry. Two transformers of 100MVA power, of 200/10-10kV voltage, with split windings on 10kV. Two sets of voltage transformers and arrestors on 220kV. Dimensions of the building in plan- 6x24m There are accumulator batteries, control panels, lines and transformers protection and automation boards in the building.			-"-	

1350

Nos.	Description	Technical characteristics	Units	Q-ty	Completion of construction % of development	Notes
		12 disconnecting switches on 220kW with earthing blades and 4 disconnecting switches on 10kW, 4 current wires on 10kW to the building of indoor switchgear (input from transformer). Foundations for all equipment and all supports are pile. Outdoor switchgear is provided with lighting, lightning protection and earthing.				
4.	Indoor switch gear on 10kV	Single-storey buiolding Dimensions in plan- 72.6x12.6m Foundation- pile Frame- steel Space enclosing structures- light concrete panels Cubic content- 6000m3 Switchgear has 4 inputs from 2 transformers 100MVA, 220/10-10kV,installed outside the building, on outdoor switchgear 220kV area (see above).			- 4%	

Nos.	Description	Technical characteristics	Units	Q-ty	Completion of construction % of development	Notes
		Switchgear of draw-out type consists of 6 sections. The first 4 sections have breaking capacity 700MVA, rated current of busbars is 3200A . They consist of: -26 cabinets with circuit breakers -6 cabinets with disconnecting switchers -2 cabinets with transformers of own needs, of 40kVA power -10 cabinets with voltage transformers -8 cabinets for outgoing cables connection -1 cabinet with low voltage equipment All cabinets are complete with protections, control and automation devices. 8 synchronous compressor motors , of 12.5MW power are feeded from these 4 sections, with reactor start-up.				

Nos.	Description	Technical characteristics	Units	Q-ty	Completion of construction % of development	Notes
		Rated current of start-up reactor is 1000A and resistance is 0.56 ohm. Reactors are located inside the building. The 5th and 6th sections are feeded from 2nd and 3d sections by means of protective reactors of 0.25 ohm. Rated current of busbars is 1600A, breaking capacity is 550MVA. The 5th and 6th sections consist of: -23 cabinets with circuit breakers -5 cabinets with disconnecting switches, voltage transformers 3 synchronous motors of 6 3MW are feeded from these sections with direct start-up, as well as 2 asynchronous motors of 0.8MW and transformer substations of 10/0.4kV.				

Nos.	Description	Technical characteristics	Units	Q-ty	Completion of construction % of development	Notes
		All cabinets are complete with protections, control and automation devices. In switchgear building there located accumulator battery of 220V with one hour capacity of 296 ampere-hours, d.c. panel, 2 battery chargers				
5.	Diesel power station	Single-storey building Dimensions in plan- 15.6x6.6m Cubic content- 520m3 Frame- steel Space enclosing structures- light concrete panels Foundation- pile Characteristics of diesel generator: Rated power Speed Voltage Current- three phase, alternating	 kW r/min V	 500 1500 400	project	

Nos.	Description	Technical characteristics	Units	Q-ty	Completion of construction % of development	Notes
		A set of diesel generator consists of: Automatic electric compressor Air dehydration unit Refrigeration unit A set for oil feeding Pump with electric motor Oil conservator Generator board Automatic control board In addition, diesel generator is complete with distributing board, tank for emergency defueling in case of fire				
6.	Distributing point on 10kV	Box-shaped module Dimensions in plan- 27x6m It is feeded by cable lines from indoor switchgear of 10kV through isolation transformers 10/10kV, of 2500kVA power (2pcs.) Transformers are located outside the building. Switchgear of draw-out type, breaking capacity 350MVA .			-"-	

Nos.	Description	Technical characteristics	Units	Q-ty	Completion of construction % of development	Notes
		It consists of: -2 cabinets of infeed with circuit breakers -1 cabinet with circuit breaker for bus sectionalization -1 cabinet with draw-out disconnecting switch for bus sectionalization -2 cabinets with transformer on 40kVA 10/0.4kV and fuses -2 cabinets with arrestors -2 cabinets with voltage transformers -8 cabinets with circuit breakers for switching-in loads				
7.	Intrasite power supply networks	Complete transformer substation to be located in the building. Each substation includes: -2 transformers on 1000kVA 10/0.4kV with oil filling -2 cabinets of 0.4kV input from transformer with draw-out circuit breaker			project	

1856

1356

Nos.	Description	Technical characteristics	Units	Q-ty	Completion of construction % of development	Notes
		-1 board of cabinet type on 0.4kV with busbar sectionalizing draw-out breaker and 16 draw-out feeder breakers -2 cabinets of 10kV input with disconnecting switch and fuses Complete transformer substation to be located in the building. It includes: -1 tranformer on 250kVA 10/0.4kV -1 cabinet of 10kV input with fuses and disconnecting switch -1 board of cabinet type on 0.4kV with one input circuit breaker and 8 feeder breakers Complete transformer substation to be located in the building (3 pcs.) Each substation includes: -2 transformers on 1600kVA 10/0.4kV with oil filling				

Nos.	Description	Technical characteristics	Units	Q-ty	Completion of construction % of development	Notes
		-2 cabinets of 10kV input with disconnecting switch and fuses -2 cabinets of 0.4kV input from transformer with draw-out circuit breakers -1 board of cabinet type on 0.4kV with busbar sectionalizing draw-out circuit breaker and 16 draw-out feeder cuicuit breakers. Complete capacitors of 225kVA power (8pcs.) Ditto, of 112.5kVA power (10 pcs.) Motor control centres (MCC). Total quantity of motors- 836 Quantity of input panels on 630A- 80 pcs. Quantity of sectionalized panels - 40 pcs. Power cable 10kV - 19km Power cable up to 1kV - 130km Control cable - 35km Computer-controlled system is used to control power supply.				

1357

Nos.	Description	Technical characteristics	Units	Q-ty	Completion of construction % of development	Notes
		The working place of dispatcher-electrician is equipped taking account of it. UPS system of 50kV power. Accumulator battery with chargers on 110V (one-hour capacity is 40 ampere-hours). Ditto, 24V (one-hour capacity is 30 ampere-hours)				

1.3. Tarasovsky GPP. 1st Stage
V. Transport and Communication Facilities

Nos.	Description	Technical characteristics	Units	Q-ty	Completion of construction % of development	Notes
1.	Garage building	It is used for maintenance and current repair of automobiles. It consists of indoor area for 5 automobiles, preventive maintenance room for 2 posts, room for battery repair and charging, indoor washing, and personnel rooms. Single-storey building. Dimensions in plan- 73.0x12.8m Height- 4.5m Cubic content- 4204m3 Area of structure- 934m2 Frame- steel Space enclosing structures- wall three-layers metal panels with mineral wool heat insulation The building is provided with all necessary equipment for repair works			- 5%	

1354

Nos.	Description	Technical characteristics	Units	Q-ty	Completion of construction % of development	Notes
2.	Garage. Parking area with air heating	It is used to make easier the start-up of automobile engine in winter time. It includes outdoor concrete area for parking of 20 automobiles, air heating radiator chamber and air duct, from which hot air is supplied under automobile engines			project	
3.	Garage. Oil containers storage	It is used for storage of oil materials in barrels and drums necessary for needs of garage. Box-shaped module- 3x12m, of 4m high			project	
4.	Garage. Fuel filling station	It is used for automobile charging with gasoline and diesel fuel. It consists of two underground tanks of 50m3 volume each, and two fuel filling facilities			project	

Nos.	Description	Technical characteristics	Units	Q-ty	Completion of construction % of development	Notes
5.	Fire station for 6 accesses with auxiliary and service rooms for 70 persons	Two-storeys building with garage for 6 accesses. Dimensions in plan- 81.8x19.2m Height of building- 7.8m Cubic content- 12250m3 Area of structure- 1600m2 Frame- steel Space enclosing structures- light concrete panels			project	
6.	Gas testing room	Single-storey building Dimensions in plan- 18.4x12.4m Height- 4.0m Cubic content- 1000m3 Area of structure- 250m2 Frame- steel Space enclosing structures- three-layers metal panels with mineral wool heat insulation			project	
7.	Automatic exchange "Kvant" for 256 numbers	Automatic exchange of quazi-electronic system, for 256 numbers in complete with power supply equipment, phones, installation cables, instruments and tools.	set	1	project	

1361

1362

Nos.	Description	Technical characteristics	Units	Q-ty	Completion of construction % of development	Notes
		It is used for private branch communication with output for interstate communication on 16 outgoing and 16 incoming connecting lines				
8.	External communication networks to communication centre of industrial area	Equipment for digital transfer system, for 30 channels, for cable line of 18km long, with separation of 5 channels for 11km long, in complete with power supply unit, installation cables and control and operating devices	set	1	project	
		Main symmetrical high frequency cable for laying in ground, with copper cores, of 1.2mm dia., of 4x4 capacity	km	18		
9.	Automatic exchange "Kvant" for 256 numbers. Railway side area.	Automatic exchange of quazi-electronic system, for 256 numbers. It is used for private branch communication and output for interstate communication on 16 outgoing and 16 incoming connecting lines.	set	1	project	

Nos.	Description	Technical characteristics	Units	Q-ty	Completion of construction % of development	Notes
		It shall be in complete with phones, installation cables, instruments and tools				
10.	Cable communication line from communication centre of oil-pumping station Pur-Per to automatic exchange of railway side area	Equipment of digital transfer system, for 30 channels, for multiplexing cable line of up to 9km long, in complete with power supply unit, installation cables and control and operating devices.	set	1	project	
		Main symmetrical high frequency cable with copper core of 1.2mm dia., of 4x4 capacity, armoured, with hose coating, for laying in ground, with installation materials.	km	9		
		Telephone cable, 50x2, with copper core, of o.5mm dia., with PE insulation in PE sheath, for laying in conduits with installation materials	km	0.4		

Nos.	Description	Technical characteristics	Units	Q-ty	Completion of construction % of development	Notes
11.	Perimetral guard alarm system of equipment storage	Guard alarm receiving and monitoring instrument for guarding fencing perimeter of toxic substances storage, perimeter of up to 500m long, with infra red radiation transmitters and installation cables and materials.	set	1	project	
		Guard alarm receiving and monitoring instrument for guarding fencing perimeter of storage area, perimeter of up to 700m long, with transmitters, installation cables and materials	set	1		
12.	Cable communication line up to residential area P-6	Telephone cable of 50x2 capacity, with copper core of 0.64mm dia., with air and paper insulation, in lead sheath, with protecting covering for laying in grounds subject to displacement, with installation materials	km	2.8	project	

Nos.	Description	Technical characteristics	Units	Q-ty	Completion of construction % of development	Notes
13.	External communication	Radio-relay station, 4 channels with base and portable radio installations, with output to trunk exchange channels and lines. Frequency range is 150-170MHz. Complete with power supply unit, antenna and mast system, installation cables, instruments and tools. Antenna mast is 45m high	set	3	project	Each set-2 terminal exchangers
14.	Communication and alarm networks up to emergency and process tanks	Telephone cable with copper core of 0.5mm dia., with air and paper insulation, in lead sheath, with protective coating, of 10x2 capacity, with installation materials	km	0.9	project	
		Control cable with PVC insulation, with 4 copper cores, of 0.75mm2 cross-section, with protective coating for laying on cable racks	km	1.0		

Nos.	Description	Technical characteristics	Units	Q-ty	Completion of construction % of development	Notes
		Ditto, cores of 1.0mm2 cross-section	km	0.4		
		Ditto, cores of 1.5mm2 cross-section	km	1.5		
15.	Intrasite communication networks of GPP	Trunk exchange of 60 channels capacity	set	1	project	
		Primary crystal electric clock with possibility to connect up to 50 secondary electric clocks, with power supply equipment	set	3		
		Loud speaking communication device for conference communication and dispatcher loud speaking communication of up to 10 users capacity	set	1		
		Equipment of radio broadcasting centre,of 1kW power, for amplifier-transmitter switch in, external programs radio receiver, antenna for different range receiving, switching centres, installation cables and wires, instruments and tools	set	1		

Nos.	Description	Technical characteristics	Units	Q-ty	Completion of construction % of development	Notes
		Amplifier of 100W power for paging system, in complete with microphone device, horn speakers (up to 10 pcs.), power supply unit	set	1		
		Exchange of prompt manager communication, up to 25 numbers capacity	set	2		
		Exchange of prompt communication up to 60 numbers	set	1		
		Exchange of prompt communication up to 10 numbers	set	2		
		Terminal devices for cable communication lines connection in complete with cabinets and switch boxes	pcs.	10		
		Telephone cable with copper core of 0.5mm dia., with air and paper insulation in lead sheath, with protective coating, of 10x2 capacity	km	10.8		

Nos.	Description	Technical characteristics	Units	Q-ty	Completion of construction % of development	Notes
		Control cable with PVC insulation with 4 copper cores of 1.0mm2 cross-section with protective coating for laying on cable racks	km	0.37		
		Ditto, cores of 1.5mm2 cross-section	km	2.2		
		Main cable for radio installation with copper core, with porous PE insulation in PVC sheath, screened, 2x1.2	km	0.8		
		Ditto, armoured with steel ribbon, 2x1.2	km	0.06		
		Telephone conductor, distributing, single-pair, with copper core, of 0.5mm dia., with PVC insulation	km	0.35		
		Power cable of general purpose with plastic insulation, with copper core of 2.5mm2 cross-section	km	0.1		
		Ditto, cores of 4mm2 cross-section	km	0.3		

Nos.	Description	Technical characteristics	Units	Q-ty	Completion of construction % of development	Notes
16.	Intrasite networks of fire and guard alarm system	Receiving and monitoring fire instrument with up to 80 loops complete with power supply unit and fire annunciators	set	1	project	
		Signal and start-up fire device of 4 loops capacity, complete with power supply unit and fire detectors	set	3		
		Receiving and monitoring fire instrument, of 60 loops capacity, complete with power supply unit	set	1		
		Receiving and monitoring instrument of guard alarm system with power supply unit and annunciators for perimeter guard	set	1		
		Receiving and monitoring fire and guard instrument, of 4 loops capacity	set	1		
		Exchange for prompt communication, for 25 numbers	set	1		

Nos.	Description	Technical characteristics	Units	Q-ty	Completion of construction % of development	Notes
		Alarm system unit	set	1		
		Including:				
		Board	pcs.	1		
		Light annunciator	pcs.	4		
		Microphone	pcs.	1		
		Stationary radio station, multi-channel, complete with power supply unit	set	1		
		Portable (mobile) radio station	set	6		
		Receiving and monitoring fire instrument, of up to 120 loops capacity, with power supply unit	set	1		
		Exchange cable with copper core of 0.5mm dia., 10x2 capacity, with air and paper insulation, in lead sheath, with protective coating	km	9.1		
		Control cable with PVC insulation, with 4 copper cores of 1.0mm2 cross-section, with protecting coating for cable rack laying	km	2.6		

Nos.	Description	Technical characteristics	Units	Q-ty	Completion of construction % of development	Notes
		Power cable of general purpose with plastic insulation, with aluminum core of 4mm cross-section	km	0.1		
17.	Communication and alarm networks up to auto-propane storage	Telephone cable with copper core of 0.5mm dia., 10x2 capacity with air and paper insulation in lead sheath, with protective coating	km	1.5	project	
		Control cable with PVC insulation, with 4 copper cores of 1.0mm2 cross-section, with protecting coating for cable rack laying	km	0.8		
		Main cable for radio installation with coppercore, with porous PE insulation, in PVC sheath, screened, of 2x1.2 capacity	km	0.5		

Nos.	Description	Technical characteristics	Units	Q-ty	Completion of construction % of development	Notes
18.	Communication and alarm networks in auto-propane storage	Telephone cable with copper core of 0.5mm dia., 10x2 capacity, with air and paper insulation	km	0.8	project	
		Control cable with PVC insulation, with 4 copper cores of 1.0mm2 cross-section, with protective sheath for cable rack laying	km	1.2		
		Ditto, cores of 1.5mm2 cross-section	km	0.5		
		Main cable for radio installation with copper core, with porous PE insulation in PVC sheath, screened, of 2x1.2 capacity	km	0.2		

1.3. Tarasovsky GPP. 1st Stage

VI. External Networks and Facilities of Water Supply, Sewerage, Heat Supply and Gas Supply Systems

Nos.	Description	Technical characteristics	Units	Q-ty	Completion of construction % of development	Notes
1.	Plant boiler room	Packaged boiler room with 3 gas and oil fuel boilers. Total capacity- 75t/h. Fuel- natural gas Boiler room includes: -production building- 30x24m, of 8.5m high -box-shaped module of personnel rooms, 3.26x12.25m, of 3.985m high -room of wet salt storage, 6x3m -flue stack of 1500mm dia., 45.0m high Box-shaped module of personnel rooms is connected with boiler building by means of link building with 3x3.26m dimension Single-storey building, modular type, frameless.			- 3.3%	

Nos.	Description	Technical characteristics	Units	Q-ty	Completion of construction % of development	Notes
		Space enclosing structures- metal three-layer panels with mineral wool heat insulation. Cubic content- 7462m3 Area of structure- 788m2				
		Main equipment of production building includes:				
		-steam boiler, of 25t/h capacity, P=1.3MPa	pcs.	3		
		-economizer, cast iron, packaged type	pcs.	3		
		-fan, Q=21000m3/h, H=418mm H2O N=45kW	pcs.	3		
		-smoke exhauster,Q=44000m3/h, H=307mm H2O, N=75kW	pcs.	3		
		-deaeration column Q=50t/h	pcs.	2		
		-deaeration tank, volume=15m3	pcs.	2		
		-separator of continuous purging, of 300mm dia.	pcs.	1		
		-heat-exchanger, steam/water, Q=25t/h	pcs.	1		
		-centrifugal pump, Q=320m3/h, H=70m, N=110kW	pcs.	3		
		-centrifugal pump, Q=60m3/h, H=140m, N=45kW	pcs.	3		

Nos.	Description	Technical characteristics	Units	Q-ty	Completion of construction % of development	Notes
		-centrifugal pump, Q=20m3/h, H=30m, N=4kW	pcs.	6		
		-steam/water heater, F(of heating)=53,9m2	pcs.	5		
		-water/water heater, F(of heating)=40.6m2	pcs.	5		
		-ionite filter of 1500mm dia.	pcs.	5		
		-salt dissolving drum, 1000mm dia.	pcs.	1		
		-metering pump, Q=100l/h, H=100m, N=0.25kW	pcs.	2		
2.	Heat-carrier heating unit	It is used for super heated heat-carrier production with parameters 115-70C The unit is located on the ground, 14x6m, with heating floor, under light shed Main equipment:			project	
		-steam-liquid shell and tube heat exchanger, F(of heating)=106m2	pcs.	2		
		-liquid-liquid shell and tube heat exchanger, F(of heating) =41m2	pcs.	2		

Nos.	Description	Technical characteristics	Units	Q-ty	Completion of construction % of development	Notes
		-centrifugal pump, Q=210m3/h, H=90m, N=55kW	pcs.	2		
		-underground buried tank, volume- 40m3	pcs.	1		
3.	Compressed gas waste heat recovery unit	It is used to produce process heat carrier with parameters 160-106C and hot water for heating the buildings of the process unit with parameters 95-60C The equipment is located in the process area and pump equipment is located in compressor house and refrigration station Main equipment:			project	
		-Heater,cylindrical,vertical, of 20MW power	pcs.	1		
		-centrifugal oil pump, Q=360m3/h, H=80m, N=110kW	pcs.	4		
		-vertical tank, volume=100m3 Pn=1.0MPa	pcs.	2		
		-centrifugal pump, Q=200m3/h H=90m, N=90kW	pcs.	3		

Nos.	Description	Technical characteristics	Units	Q-ty	Completion of construction % of development	Notes
		-underground sump, horizontal, volume=63m3	pcs.	1		
		-centrifugal pump, Q=12.5m3/h H=20m, N=2.2kW	pcs.	2		
		-shell and tube heat exchanger F(of heating)=1293m2, Pn=5MPa	pcs.	5		
		-shell and tube heat exchanger F(of heating)=875m2,Pn=7.5MPa	pcs.	3		
		-shell and tube heat exchanger F(of heating)=94m2,Pn=1.6MPa	pcs.	4		
		-plate heat exchanger, F(of heating)=160m2,Pn=1.6MPa				
4.	Fire water supply pump house	Dimensions in plan- 6x18m Height- 6m Capacity- 630m3/h Head- 90m Centrifugal pumps, horizontal (1 working, 1 stand by)			- ------ 3%	
5.	Fire water reserve tanks	Steel, cylinrdical, vertical, with heat insulation, with heating:			project	
		V=2000m3, H=11.92m, D=10.43	pcs.	2		
		V=2000m3, H=5.98m, D=6.63m	pcs.	2		

137

1578

Nos.	Description	Technical characteristics	Units	Q-ty	Completion of construction % of development	Notes
6.	Artesian wells	Prefabricated box-shaped module Dimensions in plan- 3x3m Height- 2.6m Productive capacity- 16m3/h Head- 140m Artesian submerged pumps- (1 working)	pcs.	3	- 21.2%	
7.	Pump house of potable and plant fire water supply	Dimensions in plan- 6x15m Height- 6m Two groups of pumps: 1.Service and potable needs Capacity- 200m3/h Head- 50m Centrifugal pumps (2 working 2 stand by) 2.Plant needs Capacity- 38m3/h Head- 44m Centrifugal pumps (1working, 2 stand by)	pcs.	1	project	

Nos.	Description	Technical characteristics	Units	Q-ty	Completion of construction % of development	Notes
8.	Service and potable water reserve tanks	Steel, cylindrical, vertical, with heat insulation, with heating: V=400m3, H=7.45m, D=8.53m	pcs.	2	-"-	
9.	Water deferrization unit	Capacity- 400m3/d Prefabricated box-shaped module. Dimensions in plan-3x15m Height- 3.6m	pcs.	2	-"-	
10.	Sewage effluents pump station	Capacity- 60m3/h Head- 25m Feeding header,of 5.25m deep Prefabricated box-shaped module Aboveground part- 3x6, Height- 2.6m Underground part, D=1.42m, H=7.2m Centrifugal pumps (1 working, 1 stand by)	pcs.	3	-"-	

1579

1380

Nos.	Description	Technical characteristics	Units	Q-ty	Completion of construction % of development	Notes
11.	Sewage effluents pump station	Capacity- 70m3/h Head- 32m Prefabricated box-shaped modules consist of: 1.Module of pump station with dimensions in plan 6x3m 2.Module of control and ventilation with dimensions in plan 3x9m Centrifugal pumps, flare (1 working, 1 stand by) Feeding header of 4.5m deep Feeding header of 6.0m deep	 pcs. pcs.	 1 1	-"-	
12.	Plant and rain effluents pump stations	Capacity- 200m3/h Head- 47m Prefabricated box-shaped modules consist of: 1.Module of receiving tanks, V=50m3 each, - 2 pcs. Feeding header of 5.5m deep 2.Module of machine department dimensions in plan 3x6m Centrifugal pumps, flare (2 working, 1 stand by)	 pcs.	 2	-"-	

Nos.	Description	Technical characteristics	Units	Q-ty	Completion of construction % of development	Notes
		3. Module of control and ventilation, dimensions in plan 3x9m				
13.	Treatment facilities of sewage effluents	Capacity- 200m3/d It consists of: -plant and auxiliary building -aerotank building -box-shaped module for final treatment -skid-mounted tanks (steel, vertical, V=10m3 - 4 pcs.) -sludge drying beds (4 beds with dimensions in plan 10x12.5m)	pcs.	1	-"-	
14.	Nontreated effluents pump station	Capacity- 120m3/h Head- 230m Dimensions in plan- 6x18m Height- 4.8m Pumps(2 working and 1 stand by) of explosion-proof design	pcs.	1	-"-	

1382

Nos.	Description	Technical characteristics	Units	Q-ty	Completion of construction % of development	Notes
15.	Accumuling tanks for nontreated effluents	Steel, cylindrical, vertical, with heat insulation, with heating V=1000m3, H=11.92m, D=10.43m	pcs.	2	-"-	
16.	Treatment facilities of car washing installations	Capacity- 3l/sec Reinforced concrete tank-11.34x1.55m with section of thin-layer settling and filters	pcs.	2	-"-	
17.	Offsite networks of plant water service	Underground networks from steel pipes (of 150mm dia.) with highly reinforced insulation. The depth of laying is 4.4m	m	700	-"-	
18.	Intrasite networks of service and potable water line	Underground networks from steel pipes with highly reinforced insulation			-"-	
		Dn= up to 50mm	m	500		
		Dn= up to 100mm	m	700		
		Dn= up to 150mm	m	1900		
		Dn= up to 200mm	m	50		
		Dn= up to 250mm	m	140		
		Dn= up to 300mm	m	100		
		Dn= up to 350mm		150		
		The depth of laying is 4.4m				
		Metal consumption of wells	t	62		

Nos.	Description	Technical characteristics	Units	Q-ty	Completion of construction % of development	Notes
19.	Intrasite networks of plant fire water service	Underground networks from steel pipes			-"-	
		Dn= up to 100mm	m	850		
		Dn= 150mm	m	3600		
		Dn= 250mm	m	1400		
		Dn= 300mm	m	1350		
		Dn= 400mm	m	20		
		Insulation is highly reinforced				
		The depth of laying is 4.4m				
		Metal consumption of wells	t	177		
		There are 28 water guns on the network				
20.	Intrasite networks of sewage effluents	Gravity flow networks, from cast iron pipes				
		Dn= up to 100mm	m	120		
		Dn= 150mm	m	960		
		Dn= 200mm	m	650		
		The depth of laying is 3.6 through 5.5m				
		Metal consumption of wells	t	99.5		
21.	Intrasite networks of plant rain sewerage system	Gravity flow networks, from cast iron pipes:				
		Dn= up to 100mm	m	250		
		Dn=200mm	m	2050		
		Dn= 250mm	m	450		
		Dn= 300mm	m	350		

Nos.	Description	Technical characteristics	Units	Q-ty	Completion of construction % of development	Notes
		Dn= 350mm	m	370		
		from steel pipes:				
		Dn= 200mm	m	160		
		Dn= 300mm	m	50		
		Dn= 350mm	m	80		
		The depth of laying is 3.6 through 6.25m				
		Metal consumption of wells	t	293		
22.	Offsite networks of plant rain sewerage system	Underground head networks from steel pipes				
		Dn= 200mm	km	13		
		Insulation is highly reinforced				
		The depth of laying 4.4m				
		Metal consumption of wells	t	36		

2. PROGNOSIS OF PRICES FOR OIL GAS AND REFINARY PRODUCTS. TAXES

2.1. General Conditions

Oil gas processing in Russia now is one of the few branches where prices for the raw materials and for major part of commercial products are controlled by the government.

This government control is represented by the establishment of the upper limits of the prices for raw oil gas, broad fraction of light HC, liquified gas for domestic needs as well as for stripped gas. Individual hydrocarbon fractions and hydrocarbon mixtures for industrial consumption are sold on free price basis. The revision of the upper limits of prices is made periodically in accordance with inflation increase in other branches of Russia. The last revision of the prices have been done in July 1993.

Upon the whole price control is the reasonable measure, which meets the interests of the major part of gas processing plants (GPP). This is because there is no competition on the Russian market of oil gas and broad fraction of light HC which prevents monopolistic price rise.

There is the natural price ceiling which is represented by the price on the natural gas. But the actual situation is such that the major part of GPPs in Western Siberia which have not the fractionation units, could be bancrupts if they would not sell stripped gas for higher prices.

In fact, the only Buyer of the stripped gas is concern "Gasprom", which is the monopolistic owner of the total gas pipeline system. By means of the establishing of quite high prices which allow to get some profit for gas transporting enterprices, the government has managed to balance the interests of one and another sides.

The government has to support gas processing branch by means of pricing and taxation which due to the objective reasons has low profitability, but which manages to handle part of the ecological problems of oil producing regions.

Such state control of the prices which has supported in general gas processing branch in difficult situation, has caused a certain deformation of prices and distanciated prices from those on the world market.

In the conditions of the limitation of liguified domestic gas price, Gas Processing Plants which include gas fractionation units try to compensate the damages by means of price increase on liquified gas sold to Petrochemical Plants.

And in the conditions of undeveloped, monopolistic market of light hydrocarbons they have succeeded. That's why currently the price of propane and butane bought by oil chemistry is more than 2 times higher than the price of crude oil. Such price ratio differes very much to that which exists on the world market. Of course such situation is of temporary character and in the course of light hydrocarbon market development and Russia integration to the world market these price structures will come closer.

In the conditions of hyperinflation to make long term predictions of prices on Russian market is very risky, cause

1385

the mistake of one who makes this prediction, caused by the wrong prediction of the inflation, will increase the possible mistakes of the estimation of the market conditions for the partucular product.

According to the prediction of the inflation rate made by the experts of the Russian Government the average price level for the products of the fuel and energy branches of industry in the year of 1994 will increase by 4.9 times and for natural gas by 7.2 times as compared to 1993.

Next two years the inflation rate shall decrease and starting from 1996 the inflation rate shall be 3 to 5% per year. In such case of inflation development in the year of 2010 the level of prices will increase by 8.4 - 11.2 times as compared to 1993. It is necessary to point out that the prognosis of the Government for 1992 and 1993 have turned to be very optimistic and the actual inflation rate has been 2-3 times higher than predicted.

The difficulty of the prediction of the absolute level of prices for hydrocarbons is enhanced by the fact that the part of prices are regulated by the Government, i.e. it is the result of the certain economical politics. That's why the uncertainty of economical processes is increased by general political factors as well as by subjective factors. It is supposed for the time being to continue price regulation by the Government during next five years, still it is not clear whether this term will be followed and what will be the form of the regulation. Nevertherless we have tried to make the prediction, based on our experience and on the predictions of the prices for light hydrocarbons on the market of the Western Europe. The reason for such approach is the assurance that the World Market will become an important factor which influences the internal Russian Market even if Government regulation will continue for the longer period.

1386

2.2. The Prediction of Prices for Broad Fraction of Light Hydrocarbons

There is no World Market for the broad fraction of light HC. That's why the price of the broad fraction of light HC is determined indirectly based on the prices of its separation products and cost of gas fractionation. In 1993 the price of the products which are produced by means of broad fraction separation into more narrow mixtures and individual hydrocarbons on the markets of Western Europe was 152 USD/ton. In 1996 this price will be 166 USD/ton and before 2010 it will increase up to 377 USD/ton.

The prices for hydrocarbons, assumed for the calculations have been determined by the Institute of conjuncture research. So, considering the cost of gas fractionation, the upper limit of the price for broad fraction in Western Europe will be 144 USD/ton in 1996 and 330-350 USD/ton in 2010. At the same time we mean here the realization of such quantities of the product which will not influence the conditions on the market of light hydrocarbons and will not lead to price decrease.

The delivery of broad fraction of light hydrocarbons from Pur area of Tumen region is possible by railways and by complex way, i.e. by railway and sea shipment. The shortest and the cheapest way of light hydrocarbons transportation to Rotterdam is to deliver it by railway to St.-Petersburg and then by sea. The total expenses will represent 57USD/ton out of which 41.5 USD (49.5 thous.Roubles) is the cost of railway transportation, 1.5 USD (1.8 thous.Roubles) - expenses for cargo handling, 14 USD - sea shipment. The cost of sea shipment here and further is based on the data provided by the Institute of Complex Transportation Problems.

However this way of light hydrocarbons transportation is improbable. Due to the separation of Baltic states the cargo flow in the port of St.-Petersburg has considerably increased while ecological situation in the Nevsky bay is extremely adverse.

The delivery of broad fraction of light hydrocarbons to Rotterdam via one of the Black sea ports (Tuapse) will cost 77 USD/ton. Out of which 48.9 USD is the cost of railway transportation (57.7 thous.Roubles according to the tariff acting before 01.10.93 and 1 : 1200 Dollar/Rouble exchange rate), 1.5 USD - cost of cargo handling, 26.6 USD - transportation by sea.

The delivery of light hydrocarbons via Tuapse to Mediterranean sea ports will cost a little cheaper: to Greece (Athens) - 57 USD/ton, and to Italy (Leghorn) - 66 USD/ton.

Taking into account Russian export taxes (23 USD/ton) the minimum expenses for light hydrocarbons' transportation to the West European Markets will represent 80 USD/ton.

So, the ultimate price of Ex-railway station in the region of Pur-pe, which could be available for the Producer of the broad fraction of light hydrocarbons for the its realization on the European Market in 1993 is 72 USD/ton, in

1387

1996 it will increase up to 76-81 USD and in 2010 - up to 160-170 USD.

The above estimations of the cost of railway transportation do not consider 1.5 times tariff increase which has taken place in 15.10.93. This tariff increase has created difficult insoluble situations in some branches including gas processing branch. For maijor part of light hydrocarbons' consumers the transporation of the crude have become two times as expensive as crude itself as well as for the Plants producing liquified domestic gas, the processing of light hydrocarbons has become unprofictable. The consumers have started to reject broad fraction of light hydrocarbons. Therwith light hydrocarbons are rejected not only by the Plants which produce domestic gas the price for which are regulated by the government but also they are rejected by petrochemical Plants the prices of which are not regulated by the government. The similar situation has turn to be in the coal industry. Such tariff increase seems to be unreasonable: railway transportation costs are increased more quickly than the prices for the products of crude producing and energy producing branches. So, the prices for the natural gas has increased 180 times as compared to 1991, prices for oil 800 times, and for light hydrocarbons 300 times as well as for railway transportation 1507 times.

As far as the current situation may cause the crisis in the energy producing branches and lead to interruptions in the supply of population with liquified gas in the conditions of the very cold winter, it is probable that the government has to correct this disproportion.

The gained assesments permit to assert that in case of liberation of prices for light hydrocarbons and granting the producers the right to go to the world market, the internal price in Russia would approach 85 thous.Rbls/ton. As developments, connected with the increase of railway tariffs taken place 15.10.93, have shown that under continuation of price regulation for domestic liquified gas and suppression of the price increase, it is highly improbable that internal Russia demand for broad fraction of light hydrocarbons will allow to increase price higher than 85 thous.Rbls. And even this level is 4 times as higher as currently acting regulated price 19.8 thous.Rbls/ton.

In case of the realization of the Governemnt prediction of the inflation development, the price of Ex-station in the region of Pur-pe will represent 714-915 thous.Rbls/ton in the year of 2010.

For light hydrocarbons' Consumers located in Povolzhje in 2010 the price of 1 ton of the crude will represent 900-1200 thous. Roubles.

1388

2.3. Price Prognosis for Stripped and Raw Oil Gas.

The prices for stripped gas before 2010 have been calculated with the help of the similar assesments. The results are given in Table 2.1.

When transporting the gas for export through the networks of "Gasprom" most likely "Gasprom" will charge the payment for these services equal to the prices existing on the world market for the similar services, i.e., 40 USD/1000m3 in the year 1996. The expenses of "Gasprom" in terms of Roubles for the transportation of gas through the territory of Russia will be as follows:

41.3 thous.Rbls in 1996
47.6 thous.Rbls in 2000
57.7 thous.Rbls in 2005
71.1 thous.Rbls in 2010

The payment for the transit via territory of Czech and Slovakia will be in a form of gas take-off from the gas pipeline in the quantity of 10% of the transported gas.

Russia export tax is shown in Table 2.1 in terms of ECU and it represents 19 ECU/1000m3 (approximately 23 USD/1000m3) for foreign ventures and for joint ventures with foreign investment share in the statutory capital of more than 30 %.

For Russian ventures and for joint ventures with less than 30% share of foreign investments in the statutory capital, the tax represents 16.52 ECU/1000m3.

As it is seen from the Table, without exemptions on the export taxes and providing the payment to "Gasprom" for services on the level of world prices, export realization of stripped gas is unprofitable. However, there is a precedent connected with tax exemptions: in 1993 PO "Sibneftegaspererabotka" has been released from export taxes for stripped gas.

As it has been stated above the price for the raw oil gas which is sold to gas processing Plants is regulated by the Government and currently is 1125 Rbls/1000m3. Almost all of the existing gas processing Plants are located in the regions of decreasing oil production and are underloaded with the crude.

In such conditions GPPs are dependent on the oil and gas producing plants. In the future perspective this situation will not change even if oil production will be demonopolized and each of GPPs will buy crude not from one (sometimes two or three) large gas Seller but from many small gas Sellers. That's why we believe to be expedient to keep price regulation for raw oil gas for longer period of time than it is supposed to be done by the Government. Considering the above scenario of inflation development, the price of raw oil gas will be in 2000 as 7030-7770 Rbls/1000m3, in 2005 it will be 8160-9900 Rbls/1000m3 and in 2010 it will be 9500-12600 Rbls/1000m3.

The price prognosis for oil gas, stripped gas and broad fraction of light hydrocarbons is given in Table 2.2.

2.4. Taxes

2.4.1. In accordance with the Dercree of the President of Russia dated by 14.06.92 No.629, the ventures of all forms of properties, including the ventures using foreign investments, must sell 50% of currency profit gained from products' export (or services) on the internal currency market of Russia via authorised Russian banks at the market Rouble exchange rate.

2.4.2. Export taxes for particular products are specified by the Decree of Customs Committee of Russian Federation dated by 27.02.92 No.57. This document specifies the tax for "petroleum gas and gaseous hydrocarbons" as 19 ECU per 1ton for Russian ventures and 21 ECU per 1 ton for foreign and joint ventures in which foreign capital is represented by more than 30% in the statutory capital.

On the conversion of gaseous hydrocarbons to the weight units it is assumed that 1150 m3 is equal to 1 ton.

For the individual ventures the exceptions can be made. For example, by the Decrees of the President No.374 dated by 19.03.93 and by the Decree of Government of Russia No. 218 dated by 14.03.93 Gas Processing Plants are released from the export tax and from the obligation to sell currency profit until 01.01.94.

2.4.3. Since 01.01.92 VAT (Value Added Tax) has been introduced on the territory of Russia.

VAT is determined as the difference between the price of the realized products, jobs, services and the valuve of expenditures, cost of production and circulation.

Since 01.01.93 VAT for gas processing products which are realized for free prices represents 20% and for the products which are realized for controlled prices as 16.67%.

This VAT value has been introduced based on the Russian Federation Law : " Revisions and Amendments of the Tax System of Russia", approved in July of 1992.

Products exported by manufacturers direcly are not VAT taxable.

2.4.4. Currently (i.e., before 01.12.93) there are several acting taxes and obligatory payments which are included into the cost price.

2.4.4.1. The deductions (payments) for social security fund. These deductions include : social security, medical insurance, pension fund, employment fund. The deductions represents 39% of wages' fund of the venture.

2.4.4.2. Transportation tax in the amount of 1% of wages' fund.

2.4.4.3. The deductions for scientific and technical developments in the amount of 1.5% of the production expenses

1390

including tax specified in item 2.4.4.1.

2.4.4.4. Deductions to insurance fund of the Ministry of Fuel and Energy in the amount of 1% of the cost of the commercial products.

2.4.4.5. Deductions to the investment fund in the amount of 20% of the cost of the commercial products.

2.4.5. The taxes on the profit of the venture.

2.4.5.1. The tax transmitted to the state budget in the amount of 32% of the taxable profit. The profit which is intended for the investments, including venture own production and off-production spheres, providing the total use of depreciation sum.

2.4.5.2. Specific tax for militia keeping in the amount of 2% of the sum equal to the product of the number of the personnel multiplied by the established minimum salary.

2.4.5.3. The tax for the needs of the educational organizations in the amount of 2% of wages' fund.

2.4.5.4. The tax for the excess of the wages' fund norm. The norm of the wages' fund is equal to the product of the number of the personnel multiplied by the minimum salary and multiplied by four. In case the actual amount of the wages' fund does not exceed the wages' fund norm the tax is not imposed. In case the actual amount of wages' fund exceed the norm less than two times, the tax represents 32% of the excessive amount. If the actual amount of wages' fund exceeds the norm more than two times the tax represents 50% of the excessive amount.

2.4.5.5. The tax for the maintenance of the dwelling houses and objects of the social and cultural sphere in the amount of 1.5% of the cost of the realized products.

2.4.5.6. The tax on the property in the amount of 1% of the fixed assets and circulating capital.

2.4.5.7. The tax on the users of the automobile roads in the amount of 1% of the amount of the realized products.

Upon the whole the tax system of Russia is in the stage of establishment and is characterized by instability. By the opinion of the majority of the producers the acting taxes are too much high and do not stimulate the development of the production. Due to this there is quite high probability that the new Parliament elected 12.12.93 will change significantly the tax system.

2.5. Conclusions and Suggestions.

As it is resulted from the above prognosis, transportation expenses and customs taxes make the export of broad fraction of light hydrocarbons and stripped gas from Pur region to Western Europe not very attracting for the foreign investors. Besides, it is improbable that the Government of Russia will permit the export of significant amounts of broad fraction of light hydrocarbons. First of all, there are underloaded facilities in Russia in gas fractionation.

Secondly, a number of petrochemical plants are oriented on the use of the products of light hydrocarbons' processing and these petrochemical plants even currently are faced the shortage of the crude. Decreasing of the oil production will result in the increase of the shortage for directly distilled gasoline which is used for pyrolysis. Due to this one should expect the transition of ethylene production from directly distilled gasolines to light hydrocarbons.

Third, a great part of dwelling houses in Russia use liquified hydrocarbon gas as fuel. So, the export of the significant amounts of light hydrocarbons abroad can create difficulties in the supply of thousand hundreds of Russian citizens with domestic fuel. Therewith it is probable that the consumption of liquified gas in the rural areas of Russia will icrease due to the increase of the number of farmers for which liquified gas is the most convenient type of the fuel.

Forth, CIS states which do not have their own resources will have the priority in the purchasing of broad fraction of light hydrocarbons and individual fractions of light hydrocarbons due to their geografical location and formed economical connections.

As for the export of stripped gas from gas processing Plants through the main gas pipelines of "Gasprom" the effieciency of it will increase in the course of the price rise for gas in Western Europe. But at the initial period without exemptions for taxes gas export will be of low efficiency or even unprofitable for the producer.

Considering the ecological role of the branch it is necessary that the Government of Russia shall prolong the exemptions acting in 1993 till the year of 2000.

We think that broad fraction of light hydrocarbins produced at GPPs of the Pur region shall be realized on the internal market of Russia. In this case it is possible to do the following:

- to include Tobolsk Complex making the processing of light hydrocarbons into the List of Founders of JV; to process the total amount of broad fraction in Tobolsk and to produce for export more expensive commercial products;
- to realize broad fraction of light hydrocarbons on the internal market of Russia and use the gained money for the needs of the JV.

B92

2.6. Sources of information and initial data.

2.6.1. The prices of the world market for hydrocarbons and natural gas till the year 2010 are accepted based on the publications.

The price of stripped gas realization at the border of the Germany in 1993 is 80 USD/1000m3.

2.6.2. The cost of sea shipment of broad fraction of light hydrocarbons has been accepted based on the data of Institute of Complex Transportation Services at the Ministry of Economy of Russia.

2.6.3. The expenses of "Gasprom" for stripped gas transfer over the territory of Russia have been estimated based on :

- the book written by P.T.Eremenko and N.A.Vorobjev "The development of pipeline transport in the Soviet Union and abroad", Moscow, publishing house "Nedra", 1989;

- "Norms for costs of construction and operation of gas pipelines and their facilities" (PTM-1035-86), Kiyev,1986;

- the actual data of the Ministry of gas industry for 1989.

2.6.4. The probable tariff of "Gasprom" for gas transfer in terms of hard currency has been determined based on trans-Asia gas pipeline project (Magazine "Oil, Gas and Ptrochemistry Abroad", No.2, 1992). Tariff includes the profit in the amount of 20%.

2.6.5. The costs of gas transportation from Russia borders to the borders of Germany are determined based on the actual expenses of PO "Sibnefetgaspererabotka" in 1993:

- cost of transit via territory of Ukraina is 21 USD/1000m3;

- cost of transit via territory of Czech and Slovakia is 10% of the volume of the transfered gas.

Prognosis of Prices for Stripped Gas Export, USD/1000m3

Table 2.1.

	1996	2000	2005	2010
The price of stripped gas at the market of Western Europe	90	119	165	230
Expenses for transportation within Russia	40	45	52	60
Expenses for transportation over the territory of Ukraina	23	27	31	35
Expenses for transportation over the territory of Czeck and Slovakia	9	12	17	23
The price at Pur-pe region	17	36	69	120

1394

Prognosis of Prices on Russian Market for Oil Gas, Stripped Gas and Broad Fraction of Light Hydrocarbons in Pur Area of Tumen Region

Table 2.2.

Name of Product	1996	2000	2005	2010
Oil gas, thous.Rbls/ thous.m3	6.25-6.37*	7.03-7.77*	8.2-9.9*	9.5-12.6*
Broad fraction, thous.Rbls/ton	108-110*	531 - 586	616-748	714-915
Stripped gas thous.Rbls/thous.m3	57.5-58.6*	55.3-63.1	67.4-85.7	81.3-114.4

*) For regulated prices

1596

2.7. Additional Information

A. The Price Current No.10-01 "Tariffs for Railway Cargo Transportation". Tariff intructions No.1 of the Railway Ministry of the USSR.

Part 1.

9.Tariffs on the transportation of cargo in the tank cars.

9.1. Tariffs for the transportation of cargo in the tank cars are given in Table 2 below:

Table 2.

Name of cargo	In tank cars beloning to: Ministry of railways of USSR	organizations and ventures or rented by them
	ID of the tariff	
1. Oil and oil products (item 20100,21100-21500, 22100-22500)	19	20
2. LPG (item 22600,48700)	21	22
3. Spirits and phenols (item 49300)	23	24
4. Perishable cargo transported in tank cars (item 55100-55400, 56300, 57400, 58400, 59100, 59200, 59500)	25	26
5. Another cargo transported in tank cars	27	20

9.2. The charges for the transportation of the liquid cargo in the tank cars are determined by multiplication of the cost of 1 ton transportation according to the tariffs by the cargo weight in the tank cars (except for liquified gas items 22600 and 48700).

9.3. The charges for the transportation of liquified gas (item 22600 and 48700) in the tank cars are taken for the weight of the cargo in the tank car but not more than for 22 tons.

1396

Part 2.

Section 4 includes the charges for the transportation of 1 ton of liquid cargo according to tariffs 19, 21, 23, 25, 27 in the tank cars beloning to the Ministry of rail ways; according to tariffs 20, 22, 24, 26 in the tank cars beloning to organizations and ventures or rented by them, and according to tariffs 28 (in the tank cars beloning to the Ministry) and tariff 29 (in the tank cars beloning to the organizations or rented by them) for the transportation of of oil products from the loading station or distribution stations to the place of distination.

The paiment for the shipment of each vagon according to the existing tariffs is calculated by means of multiplication of the cost of 1 ton transportation by the weight of the cargo in the tank car.

Calculation tables of payments for transportation of liquid cargo in tank cars.
(Schemes No.10-29)

Payment for transportation is determined by multiplication of the cost of 1 ton in accordance with the corresponding scheme by the weight of the cargo in the tank car
(in roubles)

Scheme number	Distance, km					
	2901 : 3000	3001 : 3100	3101 : 3200	3201 : 3300	3301 : 3400	3401 : 3500
19	14.6	15.1	15.5	16.0	16.4	16.9
20	12.6	13.0	13.4	13.8	14.2	14.6
21	41.5	42.8	44.1	45.4	46.7	48.0
22	20.7	21.4	22.0	22.7	23.3	24.0
23	26.8	27.6	28.4	29.3	30.1	30.9
24	18.0	18.6	19.2	19.7	20.3	20.8
25	39.0	40.2	41.4	42.6	43.8	45.0
26	12.8	13.2	13.6	14.0	14.4	14.8
27	18.6	19.1	19.7	20.3	20.9	21.5
28	13.6	14.0	14.5	15.0	15.4	15.9
29	11.8	12.2	12.6	13.0	13.4	13.8

B. Transport Railway Tariffs for Light HC Broad Cut Transportation acting from 15.10.93.

	Distance km	Cost per price current 1991 rbl./t	Coefficients for tariffs, 1991	Cost of transportation from1993 rbl./t
Purpe - Tobolsk	912	14.8	1507	22304
Yuzhny Balyk - Tobolsk	483	9.5	1507	14316
Purpe - Yuzhny-Balyk	429	8.8	1507	13261
Purpe - Minnibaevsky GPP (Almetjevsk)	2206	32.4	1507	48827
Tobolsk - Minnibaevsky GPP (Almetjevsk)	1294	19.7	1507	29688

1398

GYPROTYMENNEFTEGAS REPORT

(RUSSIAN VERSION)

1349

МИНИСТЕРСТВО ТОПЛИВА И ЭНЕРГЕТИКИ РОССИЙСКОЙ ФЕДЕРАЦИИ

Государственный научно-исследовательский и проектный институт нефтяной и газовой промышленности имени В. И. Муравленко (ГИПРОТЮМЕННЕФТЕГАЗ)

Углубление использования нефтяного газа и ШФЛУ месторождений Тюменской области

Предварительный проект-исследование агентства по международному развитию США

Материалы к разделу "Утилизация попутного и природного газа в целях развития Тюменской области"

Заказ 6234

Тюмень, 1993г.

1400

МИНИСТЕРСТВО ТОПЛИВА И ЭНЕРГЕТИКИ РОССИЙСКОЙ ФЕДЕРАЦИИ

Государственный научно-исследовательский и проектный институт нефтяной и газовой промышленности имени В. И. Муравленко (ГИПРОТЮМЕННЕФТЕГАЗ)

Углубление использования нефтяного газа и ШФЛУ месторождений Тюменской области

Предварительный проект-исследование агентства по международному развитию США

Материалы к разделу "Утилизация попутного и природного газа в целях развития Тюменской области"

Заказ 6234

Директор института **Ю.А. Лукашкин**

Начальник комплекса технико-экономических обоснований и перспективного планирования **Г.А. Фейгин**

1401

Тюмень, 1993 г.

С О Д Е Р Ж А Н И Е

Введение 3

1. Анализ существующего состояния добычи попутного газа в ПО Пурнефтегаз Тюменской области. 4

1.1. Состояние использования попутного газа. 4

1.2. Функциональное назначение пунктов сбора и подготовки нефти и газа 5

1.2.1. Система сбора и подготовки нефти. 5

1.2.2. Установки и сооружения системы сбора. 6

1.2.3. Оборудование для подготовки нефти и газа. 6

1.2.4. Принципиальная схема сбора и подготовки нефти и газа на месторождениях ПО Пурнефтегаз. 8

1.3. Характеристика объектов сбора, подготовки и транспорта нефти и попутного газа. 11

1.4. Физическое состояние объектов сбора, подготовки и транспорта попутного газа ПО Пурнефтегаз. 17

2. Природные условия района проектирования и строительства объектов сбора и транспорта попутного газа ПО Пурнефтегаз 20

3. Определение основных потребителей газа для собственных нужд нефтедобычи. 35

4. Перечень объектов, потребных для сбора и транспорта попутного газа в ПО Пурнефтегаз в период до 2000 г. 36

4.1. Дожимные насосные станции и установки подготовки нефти. 36

4.2. Объекты сбора и транспорта попутного газа. 36

1402

ВВЕДЕНИЕ

Настоящая работа является частью раздела "Утилизация попутного и природного газа в целях развития Тюменской области" и выполнена в соответствии с Приложением 1 к Контракту с фирмой Бектель "Углубление использования нефтяного газа и ШФЛУ месторождений Тюменской области", предварительным проектом - исследованием агентства по международному развитию США.

В работе дан анализ использования попутного газа в производственном объединении Пурнефтегаз Тюменской области в 1992 году, описана принципиальная схема сбора, подготовки и транспорта нефти и газа, а также очистки и утилизации сточных вод, дано описание функционального назначения оборудования для подготовки нефти и газа, характеристика и физическое состояние объектов сбора, подготовки и транспорта попутного газа, находящихся в эксплуатации по состоянию на конец 1992 года.

Согласно заданию в работе дано описание природных условий района, включающее в себя географическое положение, метеорологические условия и топографию района. Эта часть содержит информацию, относящуюся к требованиям и нуждам проектирования технологического оборудования и транспортных коммуникаций.

Следующий этап работы содержит результаты расчета потребностей в газе для удовлетворения собственных нужд нефтепромыслов и является неотъемлемой частью баланса добычи и использования попутного газа, составление которого необходимо для определения объемов газа, подаваемого на газопереработку или сбрасываемого непосредственно в магистральные газопроводы природного газа для подачи на топливные нужды промышленных районов, расположенных за пределами нефтедобывающих районов.

Составление баланса необходимо также для определения грузопотоков газа при расчете межпромысловых и магистральных газопроводов, компрессорных станций, размещаемых на месторождениях, удаленных от потребителей на расстояние, превышающее 60-70 км и более.

В последнем разделе приведены результаты расчета потребных объемов строительства объектов сбора и транспорта попутного газа в период 1993-2000 гг., позволяющих обеспечить полное использование попутного газа в объединении, начиная с 1996 года.

При выполнении работы использовались технологические показатели разработки месторождений по материалам СибНИИНП, выполненным в рамках данного Контракта.

Согласно заданию подготовлены обзорные карты Тюменской области и ПО Пурнефтегаз с нанесением транспортных коммуникаций и основных нефтепромысловых объектов.

1905

1. Анализ существующего состояния добычи попутного газа в ПО Пурнефтегаз Тюменской области

1.1. Состояние использования попутного газа

В истекшем 1992 году в производственном объединении Пурнефтегаз находилось в разработке 9 нефтяных месторождений: Ново-Пурпейское, Комсомольское, Барсуковское, Верхне-Пурпейское, Западно-Пурпейское, Тарасовское, Северо-Тарасовское, Харампурское и Усть-Харампурское. Два из них - Западно-Пурпейское и Северо-Тарасовское - были введены в разработку в 1992 г, остальные- в период 1985-1991 гг.

Вместе с нефтью из недр было извлечено 3895,9 млн.м3 попутного газа, в том числе 1384,0 млн.м3 /35,5%/ с Тарасовского,1270,0 млн.м3 /32,6%/ с Барсуковского и 832 млн.м3 /21,4%/ с Комсомольского месторождений. Из недр остальных 6-ти месторождений было извлечено 410 млн.м3 попутного газа, что составило 10,5% от ресурсов газа. Использование попутного газа /добыча/ составило 2067,5 млн.м3 или 53,1% от ресурсов, 1828,4 млн.м3 газа было сожжено на факелах. Добыча газа по месторождениям распределилась следующим образом:

Наименование месторождений	Добыча газа, млн.м3	Коэффициент использования, %	Объем газа,сожженного на факелах, млн.м3
1. Ново-Пурпейское	74,6	37,9	122,4
2. Комсомольское	831,6	99,9	0,1
3. Барсуковское	168,3	13,3	1101,9
4. Верхне-Пурпейское	22,9	63,2	13,3
5. Западно-Пурпейское	0,1	1,7	5,8
6. Тарасовское	969,5	70,1	413,9
7. Харампурское	0,5	0,3	169,1
8. Усть-Харампурское	-	-	1,8
9. Северо-Тарасовское	-	-	-
Итого:	2067,5	53,1	1828,4

Такой низкий уровень использования газа по всем месторождениям за исключением Комсомольского объясняется несвоевременным вводом в эксплуатацию Барсуковской КС, предназначавшейся для дожатия газа Барсуковского, Ново-Пурпейского, Верхне-Пурпейского и Западно-Пурпейского

месторождений, отсутствием системы сбора, подготовки и транспорта попутного газа на Харампурском месторождении, недостатком мощностей по переработке попутного газа на Губкинском газоперерабатывающем заводе, отсутствием мощностей по переработке газа на Тарасовском месторождении.

Потребителями попутного газа на месторождениях являются котельные ДНС и печи установок предварительного сброса воды /УПСВ/, котельные ЦПС, часть газа подается на собственные нужды поселка Губкинский управлению эксплуатации и ремонта оборудования поселкового хозяйства.

Всего в 1992 году на собственные нужды нефтепромыслов было израсходовано 189 млн.м3 газа, из них 29 млн.м3- на нужды поселкового хозяйства.

На газоперерабатывающий завод было подано 1878 млн.м3 газа. Подача газа на ГПЗ осуществлялась с Тарасовского, Комсомольского и Барсуковского месторождений по низконапорным газопроводам под собственным давлением.

1.2. Функциональное назначение пунктов сбора и подготовки нефти и газа

1.2.1.Система сбора и подготовки нефти

Сбор нефти и газа с месторождений производственного объединения "Пурнефтегаз" осуществляется по герметизированной системе, почти полностью исключающей потери углеводородов и легко поддающейся комплексной автоматизации.

Основными элементами системы сбора и подготовки являются добывающие скважины, автоматизированные замерные установки /АГЗУ/, дожимные насосные станции /ДНС/, а также центральный пункт сбора и подготовки нефти, газа и воды /ЦПС/. Элементы системы связаны между собой с помощью трубопроводов : от добывающих скважин к АГЗУ газожидкостная смесь подается по выкидным линиям диаметром 89-159мм, дальнейшая транспортировка продукции осуществляется по коллекторам большего диаметра.

Принципы работы элементов на всех месторождениях одинаковы:

- на АГЗУ разделение фаз не производится;

- на ДНС осуществляется первая ступень сепарации, газ отводится по отдельному коллектору, может производиться предварительный сброс воды с закачкой ее в нагнетательные или поглощающие скважины;

- вторая ступень осуществляется на ЦПС. Технологические процессы подготовки нефти включают в себя: сепарацию или разделение фаз; деэмульсацию продукции; обессоливание; стабилизацию нефти. Последний процесс не является самостоятельным, а осуществляется с деэмульсацией и обессоливанием.

Все оборудование выпускается в блочном исполнении, что позволяет быстро монтировать его на промыслах.

1406

1.2.2. Установки и сооружения системы сбора

Основным оборудованием системы сбора являются:

-выкидные линии и коллекторы;
-автоматизированные групповые замерные установки;
-дожимные насосные станции.

Для промысловых коммуникаций используются трубопроводы, изготовляемые из бесшовных горячекатанных труб.

Блочные автоматизированные групповые замерные установки предназначены для автоматического измерения дебита скважин при однотрубной системе сбора нефти и газа, для контроля за работой скважины по наличию подачи жидкости, а также для автоматической или по команде с диспетчерского пункта блокировки скважин или установки в целом при возникновении аварийных ситуаций. На месторождениях производственного объединения "Пурнефтегаз" применяются блочные АГЗУ типа "Спутник" на 10 и 14 подключаемых скважин. Рабочее давление, на которое рассчитаны установки - 1,6; 2,5 и 4,0 МПа.Установки позволяют измерять дебит нефти со следующими характеристиками:

вязкость нефти, МПа.С не более	80,0
массовая доля воды в нефти не более	0,95
массовая доля парафина, не более	0,07
содержание сероводорода и агрессивной пластовой воды, вызывающей коррозию свыше 0,3 г /м3.час	не допускается

Для измерения количества продукции малодебитных скважин используется блочная малогабаритная установка типа "БИУС-40". Установка позволяет измерять продукцию, имеющую следующую характеристику:

вязкость, МПа.С, не более	80,0
содержание сероводорода и агрессивной пластовой воды,вызывающей коррозию свыше 0,3 г/м3.час	не допускается
газовый фактор, м3/т, не более	100,0

Дожимные насосные станции предназначены для осуществления первой ступени сепарации нефти от газа в целях дальнейшего раздельного транспорта жидкости центробежными насосами, а газа - под давлением сепарации.

Станция состоит из технологического, щитового, канализационного блоков и свечи аварийного сброса газа, технологический блок- из технологической емкости с гидроциклоном, двух центробежных насосов, из которых один резервный. Учитывая суровые климатические условия данного района, насосная часть технологического блока выполняется в закрытом исполнении.

1.2.3. Оборудование для подготовки нефти и газа

1406

СЕПАРАЦИОННЫЕ УСТАНОВКИ

На месторождениях ПО Пурнефтегаз используются горизонтальные сепараторы, выпускаемые отечественной промышленностью. Сепараторы

двухфазные типа НГС и УБС, отделяющие газ от жидкости, а также трехфазные типа УПС, отделяющие и сбрасывающие также свободную воду.

Сепараторы устанавливаются на центральном пункте сбора и подготовки нефти и являются сепараторами 1-ой ступени на месторождениях, где продукция скважин подается на ЦПС за счет остаточной пластовой энергии /Барсуковский и Тарасовский ЦПС/ Установки типа НГС используются и на последующих ступенях, включая горячую сепарацию на последней ступени. Сепараторы типа УБС применяются, в основном, как сепараторы 1-ой ступени. Условное обозначение: НГС- нефтегазовый горизонтальный сепаратор. Выпускается нормальный ряд сепараторов с пропускной способностью по жидкости 2000 - 30000 т/сут.

Сепараторы типа УБС являются установками с предварительным отбором газа. Предварительное разделение и расслоение газожидкостной смеси происходит на конечном участке трубопровода и в депульсаторе, откуда и отводится отделившийся газ, окончательное разделение жидкости и газа производится в сепарационной емкости. Расшифровка обозначения УБС: установка блочная сепарационная. Паспортная пропускная способность по жидкости обеспечивается при газовом факторе до 120 м3/т.

Установки типа УПС предназначены для отделения газа от обводненной нефти и сброса свободной пластовой воды с одновременным учетом количества обезвоженной нефти и воды, выходящих из агрегата. Расшифровка: УПС - установка с предварительным сбросом воды. Если УПС используется на 1-ой ступени сепарации, монтируется узел предварительного сброса газа-депульсации. Продукция, поступающая на УПС, может иметь газовый фактор до 90 - 120 м3/т, обводненность до 90%; после установки обводненность продукции составляет до 20 - 30%.

НЕФТЯНЫЕ НАГРЕВАТЕЛИ и ПЕЧИ

Нагреватели и печи предназначаются для подогрева нефтяных эмульсий перед блоками глубокого обезвоживания и обессоливания. Выпускаются нефтяные нагреватели НН-2,5 и НН-6,3 /число обозначает теплопроизводительность/, блочные нагреватели нефти БН-2М, печь трубчатая блочная ПТБ-10.

Нагреватели типа НН рассчитаны на нагрев эмульсий, вода в которых не вызывает отложения солей на стенках жаровых труб; нагреватель БН-2М и печь ПТБ-10 применяются для нагрева нефтяных эмульсий со склонностью к отложению солей и наличием механических примесей.

ОТСТОЙНИКИ и ЭЛЕКТРОДЕГИДРАТОРЫ

Отстойники предназначены для отстоя нефтяных эмульсий с целью разделения последних на составляющие их нефть и пластовую воду после нагрева эмульсий в блочных или стационарных печах. Промышленностью выпускаются горизонтальные отстойники объемом 200м3. Принцип работы отстойников основан на гравитационном разделении и на эффекте промывки эмульсии как в слое дренажной воды, так и в промежуточном слое высококонцентрированной эмульсии, выполняющем функцию коалесцирующего фильтра.

Электродегидратор ЭГ-200-10 предназначен для глубокого обезвоживания и обессоливания на установках подготовки нефти. Здесь: 200- объем в м3, 10-рабочее давление. Электродегидратор отличается от отстойника наличием двух горизонтальных электродов, на которые подается напряжение до

1407

44 кВ промышленной частоты. На вход разделительных аппаратов подается эмульсия обводненностью до 20 -30% и температурой 40-50 С, обводненность выходящей нефти не более 0,5%.

НЕФТЯНЫЕ РЕЗЕРВУАРЫ

Нефтяные резервуары представляют собой емкости, предназначенные для накопления, кратковременного хранения и учета сырой и товарной нефти. В основном используются цилиндрические стальные резервуары типа РВС объемом от 100 до 10000 м3.

КОМПРЕССОРЫ

Для дожатия газа УПН и концевой ступени сепарации нефтей до 0,6 - 0,7 МПа используются блочные компрессорные установки "Такат" на базе вакуумных винтовых компрессоров 7ВКГ-50/7. Техническая характеристика компрессора приведена в табл:

производительность, м3/мин	52
абсолютное давление, МПа	
-всасывания	0,08-0,12
-нагнетания	0,7
температура газа на приеме, С	5-45
электродвигатель:	
- тип	ВАО-500L-2V2
частота вращения, мин -1	3000
напряжение сети, В	6000
мощность, потребляемая компрессором, кВт	270

Все оборудование для подготовки нефти и газа серийно выпускается отечественной промышленностью.

1.2.4. Принципиальная схема сбора и подготовки нефти и газа на месторождениях ПО Пурнефтегаз

Обводненная нефть со скважин с растворенным в ней газом после замерных установок через установки предварительного отбора газа /УПО/ поступает в гидроциклонные сепараторы первой ступени, где производится сепарация газа при давлении 0,7-0,8 МПа /рис.1.2.4.1/.

Газ, отделившийся в гидроциклонном сепараторе, совместно с газом УПО поступает в технологическую емкость, где происходит отделение капель жидкости от газа. Газ из емкости поступает в газосборный коллектор и под давлением сепарации транспортируется потребителю.

На технологической емкости смонтирован предохранительный клапан, который срабатывает при повышении давления в емкости более 0,9 МПа. При срабатывании предохранительного клапана газ отводится на факел.

Включение в технологическую схему ДНС устройства предварительного отбора газа позволяет не только разгрузить аппараты и трубопроводы, но и значительно снизить динамические нагрузки на них.

После сепараторов 1-ой ступени жидкость направляется в аппарат предварительного сброса воды /УПСВ/. По производительности, качеству отстоявшейся воды, аппарат отвечает требованиям технологического процесса. Осуществление предварительного сброса пластовой воды позволяет предотвратить попадание воды и образование ледяных пробок в межпромысловых трубопроводах.

ПРИНЦИПИАЛЬНАЯ СХЕМА СБОРА НЕФТИ И ГАЗА

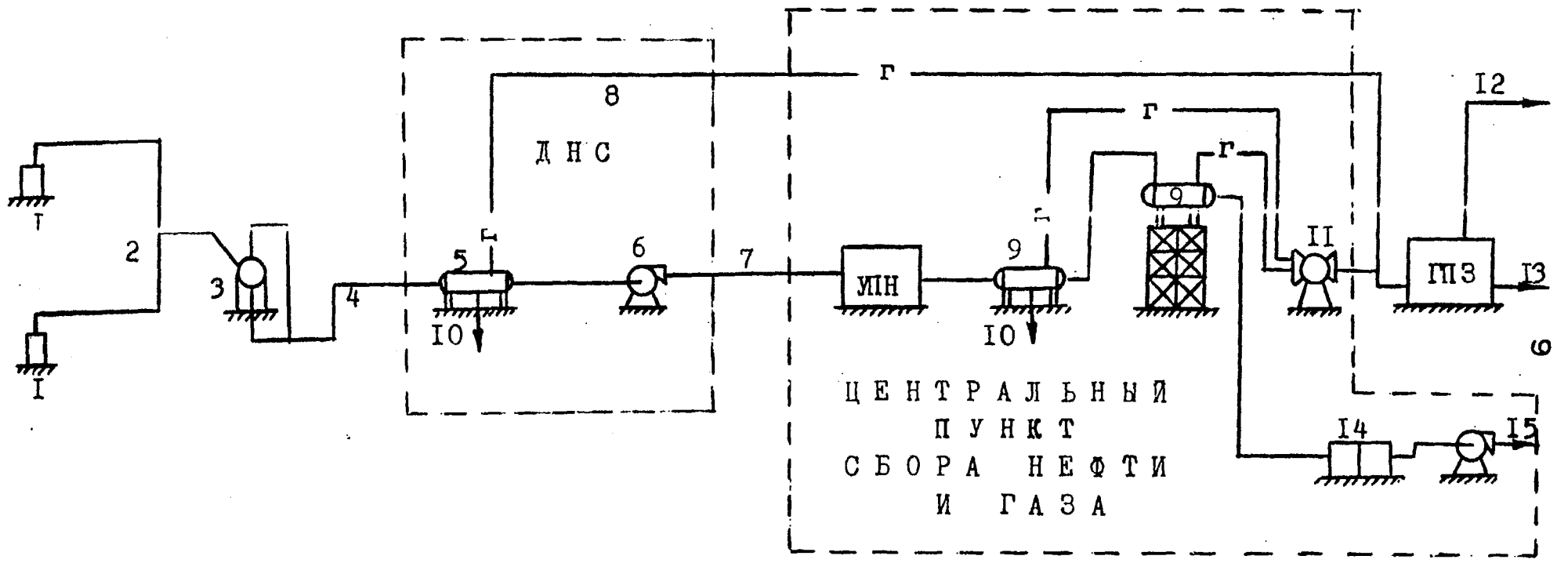

I – скважина, 2 – выкидные линии, 3 – замерная установка, 4 – нефтесборные сети, 5 – сепаратор I-ой ступени, 6 – насосная станция, 7 – напорный нефтепровод, 8 – газ I-ой ступени сепарации, 9 – концевые сепараторы, I0 – вода на очистные сооружения, II – компрессорная станция для газа УПН и концевой ступени сепарации нефтей, I2 – отбензиненный газ, I3 – широкая фракция легких углеводородов, I4 – резервуарный парк, I5 – товарная нефть.

Рис. I.2.4.I.

Из УПСВ частично обезвоженная нефть поступает в буферную емкость. В буферной емкости производится дополнительная сепарация жидкости /за счет разности давления между аппаратами 1 ступени и буферной емкостью/. Из буферной емкости обводненная нефть поступает на прием насосов, которыми через узел учета она перекачивается на ЦПС. Пластовая вода, отстоявшаяся в аппарате предварительного сброса, под собственным давлением подается на технологическую установку очистки сточных вод.

На центральном пункте сбора нефтяная эмульсия поступает в отстойник предварительного отстоя, в линию нефтяной эмульсии подается раствор реагента и горячая вода из электродегидратора с целью создания наиболее благоприятных условий для расслоения нефтяной эмульсии. В отстойниках, при температуре равной 15 С, происходит процесс обезвоживания до 20% остаточной пластовой воды.

Выделившаяся пластовая вода после замера идет на очистные сооружения, а 20% эмульсия поступает в нагреватель, где нагревается до температуры 40 С. Перед нагревателем так же подается раствор реагента-деэмульгатора. Нагретая эмульсия затем проходит ступень разгазирования в промежуточном сепараторе при давлении 0,6 МПа и температуре 40 С.

Газ промежуточной ступени сепарации поступает на компрессорную станцию для дожатия до давления газа 1-ой ступени сепарации и вместе с последним подается потребителю.

Освобожденная от газа нефтяная эмульсия идет на окончательную подготовку в электродегидратор. В электродегидраторе под действием электрического поля происходит разделение фаз "нефть-вода".

Подготовленная нефть с растворенным в ней газом направляется сначала в концевые сепараторы, где газ окончательно отделяется от нефти при давлении 0,105 МПа. Отделившийся газ направляется на прием компрессоров для сжатия и дальнейшей транспортировки потребителям. Отсепарированная нефть собирается в товарных резервуарах, откуда после замера и сдачи передается в систему внешней перекачки.

Пластовая вода, отделенная от нефти, поступает в емкость горячей воды, излишки сбрасываются на очистные сооружения с целью ее дальнейшей подготовки и утилизации в системе ППД.

В состав нефтесодержащих стоков,поступающих на очистные сооружения, входят:

-пластовые воды, отделяемые от нефти в результате технологического процесса;
-дождевые стоки с технологических площадок, из обвалования нефтяных резервуаров и очистных сооружений;
-утечки от технологического оборудования.

Очистка сточных вод до пределов, соответствующих требованиям к воде, закачиваемой в пласт, достигается путем механического отстоя в резервуарах типа РВС-5000, оборудованных двухлучевым устройством распределения потока жидкости конструкции ВНИИСПТнефть.

1410

Производительность резервуара - отстойника РВС-5000-12000 м3/сут.

Пластовая вода под давлением технологических аппаратов поступает непосредственно в резервуары-отстойники пластовой воды.Процесс отстаивания динамический с непрерывным пополнением пластовой водой и производственно-дождевыми стоками. Очищенные стоки насосами блочной насосной станции перекачиваются на кустовые насосные станции для использования в системе ППД.

Отделившаяся в процессе отстаивания нефть самотеком поступает в блок приема и откачки уловленной нефти V=16 м3, откуда насосами подается в трубопровод сырой нефти.

1.3. Характеристика объектов сбора, подготовки и транспорта нефти и попутного газа

ДОЖИМНЫЕ НАСОСНЫЕ СТАНЦИИ

На конец 1992 г в п/о "Пурнефтегаз" в эксплуатации находилось 13 дожимных насосных станций, фактический объем перекачки которых составил 8,87 млн.м3/год.

Система сбора продукции скважин герметизированная,однотрубная. Продукция скважин под давлением 1,5МПа поступает на ЗУ ,где производится замер дебита скважин по нефти и газу. От ЗУ по нефтесборным трубопроводам нефть поступает на ДНС, где происходит 1-ая ступень сепарации (на некоторых месторождениях на ДНС производится 2 ступень сепарации при атмосферном давлении).

В таблице 1.3.1. приведены проектная и фактическая производительность ДНС, сопоставлены проектные и фактические условия сепарации по месторождениям, находящимся в разработке.

ЦЕНТРАЛЬНЫЕ ПУНКТЫ СБОРА

На конец 1992 г в п/о "Пурнефтегаз" подготовка нефти осуществлялась только на Тарасовском ЦПС.

Для подготовки нефти проектом предусматривалась привязка УПН ГДР,производительностью 6 млн.т/г, а также УПН производительностью 3 млн.т/год на отечественном оборудовании.

Привязка на Тарасовском ЦПС типизированной установки подготовки нефти номинальной производительностью 6,0млн т/год в закрытом исполнении определена "Уточненным графиком поставки ЦПС ГДР для обустройства месторождений Западной Сибири".

Техническая документация на эту установку разработана ГДР на основе техзадания N 725 1 А-О, том 1...3 и решений, принятых в протоколах представителями Миннефтепрома и народного предприятия "Хемианлагенбаукомбинат" Лейпциг-Гримма ГДР.

Технологическая схема УПН ГДР

На установку поступает сырая нефть, предварительно отсепарированная на ДНС в сепараторах 1 ступени при давлении0, 8МПа. Поток сырой нефти с Т 30 С поступает в сепаратор, где происходит дегазация при Р= 0,5 МПа (абс). Предварительное обезвоживание нефти производится в отстойниках. При этом содержание пластовой воды понижается до 5-10 % вес.

1411

Таблица 1.3.1.

Показатели работы дожимных насосных станций на начало 1993 года

Наименование	Установленное оборудование				Характеристика оборудования					
	Тип оборудования	Количество,шт			Производительность, млн.т/год		Условия сепарации			
		Всего	В работе	В резерве	Проект	Факт	Т с проект	Т с факт	Рмпа,проект	Рмпа,факт
									1ст. 2ст.	
1.БАРСУКОВСКОЕ										
ДНС1а	ЦНС 105-294	4	3	1	3,12	0,67	10	8-10	0,8	0,36
расш. ДНС1б	ЦНС 300-120	4	3	1	7,94		10	8-10	0,8	
ДНС2а	ЦНС 105-490	4	3	1	3,12	1,9	10	8-10	0,8	0,4
расш. ДНС2б	ЦНС 300-240	4	3	1	5,90		10	8-10	0,8	
2.НОВО-ПУРПЕЙСКОЕ										
ДНС1	НК 200-210А-Г-1	7	5	2	8,4	0,6	10	8-10	0,8	0,2-0,32
ДНС2	НК 200-370А-Г-1	5	4	1	5,87	0,4	10	8-10	0,8	0,3-0,35
3.ВЕРХНЕ-ПУРПЕЙСКОЕ										
ДНС1	ЦНС 105-294	2	1	1	0,80	0,13	10	8-10	0,8 атм.	0,42
4.ТАРАСОВСКОЕ										
ДНС1	ЦНС 105-294	2	1	1	0,32	1,4	20	10-15	0,8 атм.	0,38-0,42
ДНС2	НК 200/210 1б	4	3	1	4,4	0,7	10	10-15	0,6	0,46-0,48
ДНС3	ЦНС 105-196	5	4	1	5,6	1,7	10	10-15	0,6	0,58
ДНС4/вр/	ЦНС 180-212	4	3	1	3,3	0,1	10	10-15	0,6	0,48-0,5
5.КОМСОМОЛЬСКОЕ										
ДНС1	ЦНС 105-294	2	2	-	1,32	0,35	10		0,6	0,5-0,55
6.ХАРАМПУРСКОЕ										
ДНС1	ЦНС 105-196	2	1	1	2,76	0,44	5	5-10	0,6	0,5 0,2
7.УСТЬ-ХАРАМПУРСКОЕ										
ДНС1	ЦНС 105-294	2	2	-	1,78	0,1	5	5-10	0,7	0,5
8.ЗАПАДНО-ПУРПЕЙСКОЕ										
ДНС1						0,38	5	5-10	0,7	0,22

Из отстойников частично обезвоженная нефть поступает в буферную емкость,которая служит расходной емкостью для насосов перекачки обводненной нефти. При давлении Р=0,4МПа и Т= 30 С в буферной емкости производится дополнительное отделение газа от нефти.

Нефтяная эмульсия из буферной емкости подается в печи, где нагревается до Т-40 С и затем поступает в электродегидраторы для окончательного обезвоживания и обессоливания.Насосами поддерживается давление Р= 0,7МПа (абс),исключающее выделение газа в электродегидраторах.Содержание пластовой воды снижается до 0,2% весовых, содержание солей до 40 мг/л.

Подготовленная нефть после электродегидраторов УПН поступает для окончательного разгазирования в концевые сепараторы отечественной поставки, а затем в резервуары,откуда насосами внешней перекачки через узел учета подается в нефтепровод внешнего транспорта.

Газ из концевых сепараторов и газ промежуточных ступеней сепарации компримируется на компрессорной станции.

Технологические параметры подготовки Тарасовской нефти на УПН ГДР скорректированы в связи с переходом на отечественные деэмульгаторы с пониженной деэмульсирующей активностью, худшей кинетикой отделения воды и повышенной температурой деэмульсации в соответствии с письмом СибНИИНП.

Строительство и пуск УПН предусмотрен двумя очередями:

1- я очередь УПН 3,0 млн т/год нефти
2- я очередь УПН 3,0 млн т/год нефти

В пусковой комплекс включены объекты типизированной УПН, производительностью 6,0 млн т/год поставки ГДР для подготовки нефти обводненностью до 50% . В состав пускового комплекса также включены резервуары, необходимые для приема нефти с Харампурского месторождения.

Перечень технологических сооружений пускового комплекса

1. УПН ГДР -6.0 млн т/год (1и2 очередь строительства)
2. Резервуары РВС -10000м3 n-10 штук
3. Площадка концевых сепараторов
4. Конденсатосборник газоуравнительной системы
5. Узел улавливания конденсата
6. Насосная нефти с пунктом учета,блоком качества нефти
7. Установка турбопоршневая "Сапфир"
8. Очистные сооружения
9. Объекты инженерного обеспечения

Для обеспечения одновременной эксплуатации пускового комплекса и дальнейшего расширения мощностей ЦПС на технологических трубопроводах предусматривается установка подключающей арматуры и фланцевых пар с заглушками.

В данное время на Тарасовском ЦПС построена и введена в эксплуатацию 1-ая очередь УПН-3.0 млнт/год нефти. В схему подготовки внесены небольшие коррективы(не функционируют буферная емкость, электродегидратор), заметны небольшие отклонения в технологических параметрах подготовки нефти.

Оборудование, представленное проектом, и оборудование, фактически работающее на месторождении ,а также технологические параметры проектные и фактические представлены в табл 1.3.2.

Таблица 1.3.2.

Показатели работы центральных пунктов сбора на конец 1992 года

Наименование	Установленное оборудование		Характеристика оборудования					
	Тип оборудования	Колич.шт.	Производит. млн.т/год		Технологические параметры			
			Проект	Факт	Т С проект	Т С факт	Рмпа,проект	Рмпа,факт
ТАРАСОВСКОЕ								
1. УПН ЦПС-УЗО(ГДР)								
ПРОИЗВОДИТЕЛЬНОСТЬ								
-по нефти			6.0	4.71				
-по жидкости			11.5	5.96				
1.1 Сепаратор	V-100м3	2			30	25	0.5	0.45-0.55
Отстойник	V-200м3	6						
Буферная емкость	V-100м3	2			30	-	0.4	-
Электродегидратор	V-200м3	4			40	-	0.7	-
2. УПН/отечеств./								
ПРОИЗВОДИТЕЛЬНОСТЬ								
-по нефти			3.0					
-по жидкости								
2.1 Сепаратор	НГС11-10-3000-09Г2С,ГП49.00.000 V-100м3 Ррасч.1 МПа	1			30	-	0.6	-
Нагреватель	ПТБ-10	2						
Электродегидратор	ЭК 200-10 V-100м3 Ррасч.1 МПа	2			45	-	0.7	-
Емкость авар.	ЕПП 40-2400-1625-2-К V-40 м3	2						
3. Сепаратор концевой	НГС11-10-3000-09Г2С,ГП49.00.000 V-100м3 Ррасч.1 МПа	1			40	22	0.105	0.105

14

Сбор и транспорт попутного газа осуществляется по газосборным сетям и межпромысловым газопроводам.

К газосборным сетям относятся газовые коллекторы, подающие газ от дожимных насосных станций, до сборного пункта, являющегося начальной точкой межпромыслового газопровода, по которому газ транспортируется за пределы месторождения.

Наличие газосборных сетей на месторождении определяется количеством ДНС.

В случае размещения на месторождении одной ДНС газосборные сети отсутствуют,транспорт газа с такого месторождения осуществляется по межпромысловому газопроводу, подающему газ на ГПЗ или иному потребителю.

В таблицах 1.3.3 и 1.3.4 дана характеристика газосборных сетей и межпромысловых газопроводов низкого давления.

Таблица 1.3.3.

Характеристика газосборных сетей

Наименование объекта		Диаметр, мм	Толщина стенки, мм	Протяженность, км	Давление,МПа Р начальное	Давление,МПа Р конечное	Температура, С	Пропускная способность, млн.м3/год
1		2	3	4	5	6	7	8
1.Ново-Пурпейское, всего:				13.0				
в том числе:								
ДНС1-т.1		426	7	5.6	5.48	5.02	10	258
ДНС2-т.1		325	6	6.2	5.47	5.02	10	116
2. Тарасовское, всего				46.2				
в том числе:								
ДНС2-т.1	1 н.	426	7	1.1	6.80	5.82	10	936
т.1-т.2		1020	10	2.5	5.82	5.70	10	2191
т.2-т.3		1020	10	7.5	5.70	5.02	10	2908
т.3-т.5		1020	10	2.3	5.02	4.40	10	4686
ДНС2-т.1	2 н.	426	7	1.1	6.80	5.82	10	936
т.5-ГПЗ		1020	10	5.6	4.40	2.20	10	4765
ДНС3-т.2		530	8	9.0	7.24	5.70	10	743
ДНС1-т.4		1020	10	0.3	5.06	5.05	10	1319
ЦПС-т.4		1020	10	0.9	5.79	5.06	10	8749
т.4-т.3		1020	10	1.0	5.06	5.02	10	1865
т.5-ГПЗ		530	8	5.6	4.40	2.20	10	807
ДНС4-т.1		325	6	9.3	6.66	5.82	10	141
3. Барсуковское				44.4				
т.3-т.4	1н.	530	8	4.5	4.58	3.87	10	576
	2н.	530	8	4.5	4.58	3.87	10	576
т.4-т.5	1н.	720	8	7.0	3.87	3.10	10	1019
	2н.	720	8	7.0	3.87	3.10	10	1019

115

Продолжение таблицы 1.3.3.

1		2	3	4	5	6	7	8
т.5-КС	1н.	720	8	5.9	3.10	2.50	10	875
	2н.	720	8	5.9	3.10	2.50	10	875
УПСВ-т.8		89	4	0.3	4.32	4.31	10	1
т.8-т.4		530	8	1.1	4.31	3.87	10	902
ДНС1-т.8		530	8	0.2	4.38	4.31	10	875
ДНС2 - т.1		426	7	0.8	5.76	5.62	10	406
т.1 -т.3	1н.	325	6	7.2	5.62	4.58	10	162
Итого:				103.6				

Таблица 1.3.4.

Характеристика межпромысловых газопроводов низкого давления

Наименование объекта	Диаметр, мм	Толщина стенки, мм	Протяженность, км	Давление,МПа Р начальное	Р конечное	Пропускная способность, млн.м3/год
1. Ново-Пурпейское-Барсуковское	530	8	9.6	5.02	4.70	355
2. Тарасовский ЦПС - Губкинский ГПЗ	1020	10	64.0	6.00	2.50	2009
3. Барсуковское - т.1	720	8	28.6	4.57	4.03	756
4.т.1-Губкинский ГПЗ	820	8	23.2	4.03	2.50	1142
5. Комсомольское - т.1	426	6	1.0	4.61	4.03	1209
6. Верхне-Пурпейское-Барсуковское	426	6	16.0	5.27	5.08	221
7. ДНС-2 Барсуковского-Комсомольское	720	8	45.3	5.76	4.03	756
8. Комсомольское- Губкинский ГПЗ	720	8	23.8	4.03	2.50	756
9. Усть-Харампурское - Тарасовский ГПЗ	426	6	38.9	7.00	2.20	249
10.Западно-Пурпейское-Барсуковское	325	5	26.5	5.30	4.57	82
Итого:			276.9			

Как следует из таблиц, на конец 1992 года в эксплуатации находилось 103,6 км газосборных сетей, из них 13 км на Ново-Пурпейском, 46,2 км на Тарасовском и 44,4 км на Барсуковском месторождениях /рис.2/.

Протяженность межпромысловых газопроводов низкого давления для подачи газа на Губкинский ГПЗ составила на конец 1992 года 276,9 км.

1.4. Физическое состояние объектов сбора, подготовки и транспорта попутного газа

Одной из самых сложных проблем, вставших перед нефтяниками Западной Сибири, является проблема эффективного и безаварийного использования основных фондов.

Проведенный анализ непосредственно по ПО Пурнефтегаз показал, что ДНС данного района имеют значительную амплитуду по возрастному состоянию.

Степень износа определялась в зависимости от нормативного срока службы оборудования.

Месторождения, введенные в эксплуатацию до 1988 года, имеют значительные степени износа оборудования ДНС. Так, Ново-Пурпейская ДНС -1 , Барсуковская ДНС-1 -имеют 87% износа, Тарасовская ДНС-1 - 75%, Ново-Пурпейская ДНС-2 и Верхне-Пурпейская ДНС - 63% износа. Остальные месторождения имеют среднюю и незначительную степень износа.

Физическое состояние и степень износа ДНС при нормативном сроке службы - 8 лет, представлены в табл. 1.4.1.

Таблица 1.4.1.

Физическое состояние дожимных насосных станций на конец 1992 года.

Наименование объекта	Год ввода	Срок службы	Степень износа при нормативном сроке службы 8 лет, %
1.БАРСУКОВСКОЕ			
ДНС1А	1985	7	87
ДНС2	1990	2	25
2.НОВО-ПУРПЕЙСКОЕ			
ДНС1	1985	7	87
ДНС2	1987	5	63
3.ВЕРХНЕ-ПУРПЕЙСКОЕ			
ДНС1	1987	5	63
4.ТАРАСОВСКОЕ			
ДНС1	1986	6	75
ДНС2	1988	4	50
ДНС3	1990	2	25
5.КОМСОМОЛЬСКОЕ			
ДНС1	1988	4	50
6.ХАРАМПУРСКОЕ			
ДНС1	1990	2	25
7.УСТЬ-ХАРАМПУРСКОЕ			
ДНС1	1992	0,5	5
8.ЗАПАДНО-ПУРПЕЙСКОЕ			
ДНС1	1992	0,5	5

Физическое состояние и степень износа ЦПС не рассматривались, так как единственный функционирующий ЦПС - Тарасовский - находится в стадии строительства.

1917

В связи с тем, что ввод объектов по сбору и транспорту попутного газа хронически отстает от ввода в разработку нефтяных месторождений, все газопроводы являются практически новыми, отработавшими по 2 - 4 года.

Степень износа их при нормативном сроке службы газопроводов 40 лет составляет 5 - 10 %.

Нормативный срок службы принят согласно"Единым нормам амортизационных отчислений на полное восстановление основных фондов народного хозяйства", 1990 год.

Физическое состояние газосборных сетей и межпромысловых газопроводов низкого давления представлено в табл. 1.4.2 и 1.4.3.

Таблица 1.4.2.

Физическое состояние газосборных сетей на конец 1992 года

Наименование объекта		Протяженность, км	Год ввода	Срок службы, лет	Степень износа при нормативном сроке службы 40 лет, %
1. Ново-Пурпейское					
ДНС1-т.1,	D-426	5.6	1989	3	7.5
ДНС2-т.1,	D-325	6.2	1989	3	7.5
2. Тарасовское					
ДНС2-т.1,	D-426 1н	1.1	1989	3	7.5
т.1-т.2,	D-1020	2.5	1989	3	7.5
т.2-т.3,	D-1020	7.5	1989	3	7.5
т.3-т.5,	D-1020	2.3	1989	3	7.5
ДНС2-т.1,	D-426 2н	1.1	1990	2	5.0
т.5-ГПЗ,	D-1020	5.6	1990	2	5.0
ДНС3-т.2,	D-530	9.0	1990	2	5.0
ДНС1-т.4,	D-1020	0.3	1989	3	7.5
ЦПС-т.4,	D-1020	0.9	1989	3	7.5
т.4-т.3,	D-1020	1.0	1989	3	7.5
т.5-ГПЗ,	D-530	5.6	1990	2	5.0
ДНС4-т.1,	D-325	9.3	1992	-	-
3. Барсуковское					
т.3-т.4,	D-530 1н	4.5	1990	2	5.0
	D-530 2н	4.5	1990	2	5.0
т.4-т.5,	D-720 1н	7.0	1990	2	5.0
	D-720 2н	7.0	1990	2	5.0
т.5-КС,	D-720 1н	5.9	1990	2	5.0
	D-720 2н	5.9	1990	2	5.0
УПСВ-т.8,	D-89	0.3	1990	2	5.0
т.8-т.4,	D-530	1.1	1990	2	5.0
ДНС1-т.8,	D-530	0.2	1990	2	5.0
ДНС2-т.1,	D-426	0.8	1990	2	5.0
т.1-т.3,	D-325 1н	7.2	1990	2	5.0
Итого		103.6			

1418

Таблица 1.4.3.

Физическое состояние межпромысловых газопроводов низкого давления на конец 1992 года

Наименование объекта	Протяженность, км	Год ввода	Срок службы, лет	Степень износа при нормативном сроке службы 40 лет, %
1. Ново-Пурпейское-Барсуковское D 530-6	9.6	1988	4	10.0
2. Тарасовский ЦПС-Губкинский ГПЗ D 1020-10	64.0	1988	4	10.0
3. Барсуковское-т.1 D 720-8	28.6	1989	3	7.5
4. т.1-Губкинский ГПЗ D 820-8	23.2	1989	3	7.5
5. Комсомольское-т.1 D 426-6	1.0	1989	3	7.5
6. Верхне-Пурпейское-Барсуковское D 426-6	16.0	1989	3	7.5
7. ДНС2 Барсуковского-Комсомольское D 720-8	45.3	1989	3	7.5
8. Комсомольское-Губкинский ГПЗ D 720-8	23.8	1989	3	7.5
9. Усть-Харампурское-Тарасовский ГПЗ D 426-6	38.9	1990	2	5.0
10.Западно-Пурпейское -Барсуковское D 325-5	26.5	1992	-	-
Итого:	276.9			

Формирование системы ремонтного обслуживания объектов сбора, подготовки и транспорта попутного газа в зоне деятельности п.о. Пурнефтегаз должно осуществляться с учетом имеющихся производственных мощностей по ремонту и обслуживанию производственного объединения Сибнефтегазпереработка, что обеспечит в дальнейшем при физическом старении оборудования и расширении системы в целом, снижение общих капитальных вложений в реализацию проекта.

2. Природные условия района

2.1. Геолого-геоморфологические условия

В геологическом отношении рассматриваемая территория является частью молодой эпигерцинской Западно-Сибирской плиты, которая прошла долгий и своеобразный путь развития. Нижний структурно-тектонический ярус территории образуют породы кристаллического фундамента, а верхний - породы мезо-кайнозойского платформенного чехла. Максимальные мощности чехла (4000-5500 м) приурочены к крупным отрицательным структурам и совпадают в плане с долинами р.Пур и его притоков.

В основании платформенного чехла лежат юрские отложения, которые представлены континентальными, лагунными и морскими фациями, общей мощностью до 1600 м. На верхне-юрских породах согласно залегают отложения всех ярусов мела, которые перекрываются породами палеогена. Верхние горизонты разреза почти повсеместно представлены толщей четвертичных осадков мощностью до 200 м. Четвертичные отложения представлены несколькими генетическими типами: аллювиальные, озерно-аллювиальные, морские и ледниково-морские. Комплекс аллювиальных и озерно-аллювиальных отложений развит в пределах речных долин и слагает надпойменные террасы и поймы рек. В этих же районах отмечаются участки наиболее широкого распространения болотных отложений. На большей части водораздельной территории залегают морские и ледниково-морские отложения с литологической характеристикой (глины, супеси, суглинки, пески с валунами, галькой и гравием), но преобладают супесчано-суглинистые отложения. Как в долинах рек, так и на водоразделах прослеживается закономерное увеличение доли песков и уменьшение доли суглинков в верхних горизонтах четвертичных отложений при движении с севера на юг.

Доминирующие в разрезах песчаные породы, в целом, значительно льдонасыщенные, характеризуются массивной криогенной текстурой. Объемная льдистость их достигает 40-45 % в отложениях сингенетического горизонта современного аллювия Пура. Такая же высокая льдистость нередко отмечается в эпикриогенных песках надпойменных террас в тех участках, где пески перекрыты торфом. На остальной территории в аллювиальных песках 1 и 2 надпойменных террас льдистость уменьшается до 28-30 %.

Основная особенность морфоструктуры этого района - преимущественно унаследованный характер ее развития: как положительные, так и отрицательные морфоструктуры являются, как правило, прямыми.

Речная сеть района закономерно связана с двумя обусловленными направлениями. Простирание Пура и ряда других рек субмеридианальное. Средние и малые реки, в основном, притоки рек субмеридианальной ориентации, обычно имеют субширотное или близкое к нему простирание.

На исследуемой территории располагаются как отрицательные морфоструктуры - Толькинская низменность, так и положительные - Ненецкая и Таз-Пуровская возвышенности.

Исследуемая территория расположена в зоне прерывистого распространения многолетнемерзлых пород (ММП), для которой свойственна чрезвычайная пестрота геокриологических условий. Это проявляется в частом чередовании участков, сложенных сильнольдистыми мерзлыми и водонасыщенными талыми породами. Характер распространения ММП в пределах речных долин и водоразделов различный.

1420

В краевых дренированных частях аллювиальных террас и водораздельных поверхностей ММП расположены и приурочены к редким массивам торфяников

в днищах логов и полос стока, а также к крупным склонам северной экспозиции. Мощность ММП изменяется от нескольких метров до 150-200 м (на водораздельных поверхностях). Температура изменяется от -1 С до -4 С, причем на большей части она составляет 0 С; -1 С. Для зоны характерна высокая льдистость, поскольку в мерзлом состоянии здесь находятся либо водоносные горизонты, либо переувлажненные озерно-болотные отложения. Практически все ММП здесь эпикриогенного образования.

Характерная особенность рассматриваемого района - интенсивное современное образование ММП при изменении теплообмена как за счет периодических колебаний климата, так и за счет естественного развития растительного покрова, глубина сезонного промерзания изменяется от 0.3-0.8 до 2.5-3.5 м.

Широкое развитие здесь получили массивы крупнобугристых торфяников, которые занимают огромные площади. Для них типично многократное чередование крупных и мелких мерзлых бугров пучения, термокарстовых озер и понижений.

Глубина залегания кровли второго слоя ММП увеличивается с севера на юг. В северной части зоны она составляет 60-100 м, на широте Тарко-Сале 100-400 м, в верховьях Пура 150-200 м.

Рельеф территории равнинный, с небольшим колебанием высот. Основные характеристики рельефа приведены в таблице 2.1.1.

Таблица 2.1.1.

Характеристики рельефа территории

Характеристики	Единицы измерен.	Показатели
1. Абсолютные высоты	м БС в.	50-100
2. Углы наклона поверхности	в градусах	0.5-1.0
3. Глубина расчленения рельефа (превышение водоразделов над урезами рек)	м	5-15
4. Густота расчленения рельефа (расстояние между соседними понижениями рельефа)	км	среднее 2.4-1.8

В целом геолого-морфологические условия этого района сложные и создают определенные сложности для строительства промышленных объектов.

2.2. Метеорологические условия

Зона производственной деятельности п.о.Пурнефтегаз расположена в высоких географических широтах (64° - 66°с.ш.) на севере Тюменской области. Это обусловило незначительный приток солнечной радиации и формирование холодного климата. Величина суммарной солнечной радиации составляет около 70-80 ккал на кв.см в год. Месячные суммы солнечной радиации, поступающие на земную поверхность(по метеостанции п.Тарко-Сале)приведены в таблице 2.2.1. Максимальное поступление суммарной радиации отмечается в июне-июле (до 680 мдж. на кв.м) , минимальное - в декабре-январе.

Таблица 2.2.1.

Экстремальные месячные суммы прямой солнечной радиации на горизонтальную поверхность

МД ж/кв.м

Характеристики	Сумма	Январь	Февр.	Март	Апрель	Май	Июнь	Июль	Август	Сент.	Окт.	Ноябрь	Декабрь
1. Экстремальные месячные суммы прямой солнечной радиации на горизонтальную поверхность	Максим.	4.2	33.5	125.7	222.1	322.6	402.2	406.4	280.7	108.9	41.9	8.4	0
	Год	1977	1971	1976	1972	1970	1974	1974	1973	1975	1970	1976	1977
	Миним.	0	12.6	88	146.6	213.7	121.5	192.7	88	41.9	8.4	0	
	Год	1973	1975	1973	1977	1977	1968	1973	1970	1971	1965	1977	
2. Экстремальные месячные суммы рассеянной радиации	Максим.	12.6	54.5	163.4	259.8	385.5	360.3	305.9	230.4	146.6	79.6	25.1	8.4
	Год	1970	1974	1973	1969	1972	1970	1973	1970	1973	1976	1972	
	Миним.	8.4	41.9	134.1	192.7	318.4	272.4	234.6	176	100.6	62.8	16.8	4.2
	Год	1976	1977	1966	1977	1971	1974	1966	1977	1970	1965	1974	
3. Экстремальные месячные суммы суммарной радиации	Максим.	16.8	83.8	268.2	469.3	683	674.6	666.2	469.3	217.9	121.5	33.5	8.4
	Миним.	8.4	67	230.4	402.2	565.6	448.3	498.6	318.4	134.1	71.2	16.8	4.2
4. Экстремальные суммы радиационного баланса	Максим.	-37.7	-25.1	-21	83.8	360.3	368.7	335.2	201.1	88	0	-25.1	-41.9
	Миним.	-50.3	-58.7	-50.3	-12.6	163.4	196.9	238.8	146.6	58.7	-71.2	-62.8	-62.8

Таблица 2.2.2.

Продолжительность солнечного сияния

Характеристики	Январь	Февр.	Март	Апрель	Май	Июнь	Июль	Август	Сент.	Окт.	Ноябрь	Декабрь	Год
1. Продолжительность солнечного сияния, часов	13	70	164	221	226	217	286	195	98	47	28	1	1566
2. Продолжительность солнечного сияния, час. :													
- в дополуденные часы	5.1	29.4	75.6	104.5	104.6	102.1	140.7	91.3	45.1	9.2	11.1	0.5	
- в послеполуденные часы	8.3	41.4	87.9	116.7	121.4	125.6	144.9	103.6	52.9	27.4	17	0.6	
3. Число дней без солнца	25	11	5	4	4	3	2	4	8	17	21	30	133

В то же время величина продолжительности солнечного сияния несколько выше, чем в районах европейской территории России, лежащих на тех же широтах. Максимальная продолжительность солнечного сияния приходится на весенне - летнее время. В зимний период число дней без солнца достигает 25- 30 дней в месяц (табл.2.2.2.).

Среднегодовая температура воздуха отрицательная (-6.7 С). Зима холодная, продолжительная (7.5 - 8 месяцев), средняя температура самого холодного месяца, января (-25.0 С), абсолютный минимум, зарегистрированный на метеостанции, (-58 С) (табл. 2.2.3.). Лето короткое (50 - 60 дней), умеренно прохладное, с частыми заморозками.

Таблица 2.2.3.

Характеристики термического режима территории

Характеристики	Показатели
1. Температура воздуха, t С:	
- среднегодовая	-6.7
- среднемесячная:	
январь	-25.0
май	-1.2
июль	15.4
октябрь	-4.7
- максимальная, июль	+20.7
- минимальная, январь	-45
2. Число дней с низкими температурами, дней:	
-30 и ниже	35
-31-40	18
-45 и ниже	2
3. Число дней с высокими температурами:	
+20	9.6
+25	0.5
4. Продолжительность безморозного периода, дней:	
- средняя	87
- наибольшая	124
- наименьшая	55
5. Продолжительность отопительного периода, дней:	
- средняя	274
- наименьшая	252
- наибольшая	306

1424

Средняя температура самого теплого месяца, июля +15.4 С. Абсолютный максимум составляет 32 - 34 С. Даты наступления различных сезонных явлений и их продолжительность приведены в таблице 2.2.4.

Таблица 2.2.4.

Даты наступления различных сезонных явлений и их продолжительность

Сезонные явления	Число, месяц
1. Средняя дата перехода средней суточной температуры через 10.0°С - 5°С /в период падения/:	
10°С	29 авг.
0°С	2 окт.
-5°С	16 окт.
2. Средняя дата:	
1/ снежного покрова:	
- самая ранняя появления	6 сент.
- появления	3 окт.
- установления	12 окт.
2/ устойчивых морозов:	
- наступления	15 окт.
- прекращения	12 апр.
3/ снежного покрова:	
- разрушения	18 мая
- схода	23 мая
- самая поздняя схода	9 июня
3. Средняя дата перехода средней суточной температуры воздуха через -5.0°С, 10°С /в период подъема/:	
-5°С	28 апр.
0°С	21 мая
10°С	16 июня
4. Дата заморозка:	
- средняя последнего	6 июня
- самая поздняя последнего	21 июня
- самая ранняя первого	5 авг.
- средняя первого	25 сент.
5. Продолжительность периода, дни	
- безморозного	87
- со снежным покровом	224
- устойчивых морозов	189

Среднее годовое количество осадков равно 460 миллиметрам. Наибольшее количество осадков выпадает в летний период. В течение года 203 дня бывают с осадками (табл. 2.2.5.). Дожди малоинтенсивные, часто затяжные. Гроза случается в среднем 14 раз (дней) в году. В зимнее время выпадение осадков сопровождается метелью (среднее число дней с метелью за год не превышает 45). Среднегодовая относительная влажность воздуха составляет 77%.

Ветровой режим территории обусловлен интенсивной циклонально антициклональной циркуляцией атмосферы и равнинным рельефом территории. Зимой господствуют ветры южного и юго-западного направления (до 49 %), летом преобладают ветры с северной составляющей, до 39% (табл.2.2.6., рис. 2.2.1.). Средняя скорость ветра равна 3.7 м/с.Однако, один раз в год ветры могут достигать скорости до 20 м/с. (табл.2.2.7.). Среднее число дней с ветром 15 м в секунду уже составляет 39 дней. В зимний период, в дни с низкой температурой, скорости ветра обычно небольшие (табл.2.2.8.).

1425

Таблица 2.2.5.

Характеристики осадков

Характеристики	Единицы измер.	Показатели
1. Среднее количество осадков:		
-год	мм	461
-месяцы:		
январь	-"-	19
май	-"-	35
июль	-"-	65
октябрь	-"-	46
2. Число дней с осадками		
- год	дни	203
- месяцы:		
январь	-"-	18.4
май	-"-	15.5
июль	-"-	13.9
октябрь	-"-	21.9
3. Средняя продолжительность периодов:		
-дождливого	дни	3.3
- бездождного	-"-	5.1
4. Число дней с грозой:		
- среднее	дни	14
- наибольшее	-"-	26
- продолжительность	час	25.9
5. Число дней с метелью:		
- среднее	дни	45
- наибольшее	-"-	50
- продолжительность	час	314
6. Относительная влажность воздуха:		
- среднегодовая	%	77
- апрель	-"-	79
- июль	-"-	69
- октябрь	-"-	86

Таблица 2.2.6.

Повторяемость направления ветра и штилей

проценты

Характеристики	С	СВ	В	ЮВ	Ю	ЮЗ	З	СЗ	Штиль
Месяцы:									
январь	5	3	7	17	27	22	11	8	21
май	17	9	7	11	12	8	10	26	8
июнь	19	12	7	9	10	7	10	26	9
июль	24	15	8	9	7	8	8	21	14
сентябрь	11	10	7	14	17	14	13	14	16
октябрь	10	6	7	10	20	19	14	14	12
Год	12	8	7	12	17	14	11	19	15
Средняя скорость ветра по направлениям, м/сек. :									
- январь	3.1	2.8	3.6	4	5	4.6	3.8	3.4	
- июль	3.9	3.7	3.4	3.5	3.3	3.2	3.2	3.9	

1426

Повторяемость направлений ветра и штилей за год, Тарко-Сале

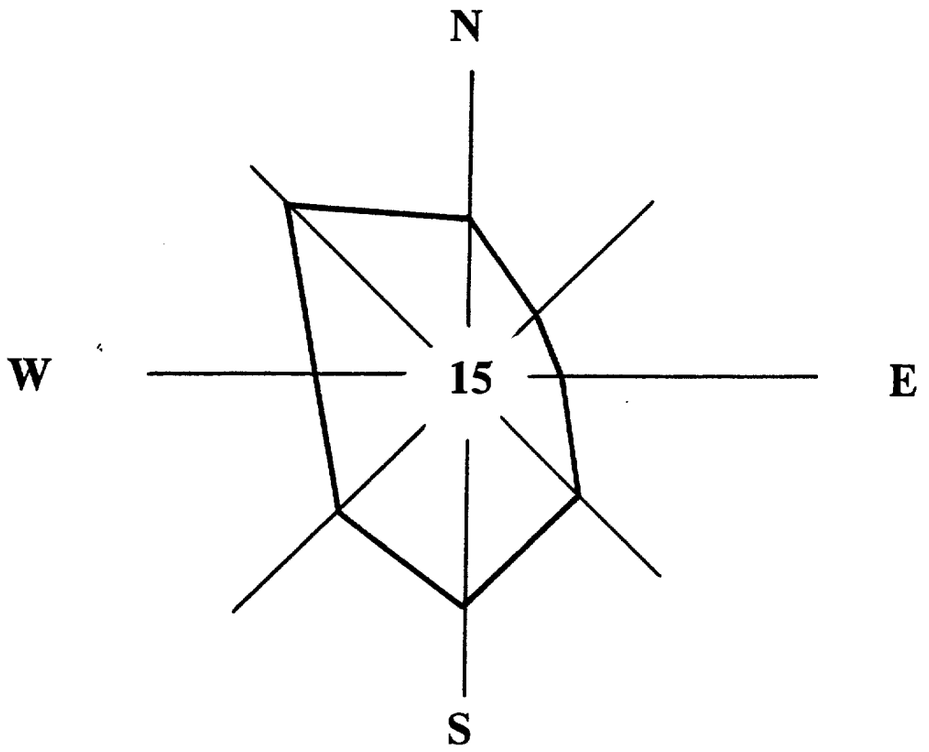

Масштаб: в 1 см - 5%

Рис. 2.2.1.

1427

Таблица 2.2.7.

Характеристики ветра

Характеристики	Един.изм.	Показатели
1. Средняя скорость ветра:		
- годовая	м/сек.	3.7
- месячная:		
январь	-"-	3.4
июль	-"-	3.5
2. Максимально возможная один раз в :		
год	м/сек.	20
10 лет	-"-	25
20 лет	-"-	27
3. Среднее число дней с ветром в году		
8 м/сек. и более	дни	83
12 м/сек. и более	-"-	22
15 м/сек. и более	-"-	39

1428

Таблица 2.2.8.

Некоторые характеристики термического и ветрового режимов за три самых холодных месяца /декабрь-февраль/

Характеристики	Един. измер.	Направление ветра С			СВ			В			ЮВ		
		Дек.	Янв.	Февр.	Дек.	Янв.	Февр.	Дек.	Янв.	Февр.	Дек.	Янв.	Февр.
1. Температура воздуха	°С	-30.7	-30.4	-31.1	-29.2	-28.4	-32.4	-27.3	-25.2	-27	-22.6	-22	-20.3
2. Скорость ветра	м/сек.	2.5	3.4	3	2.8	2.9	2.6	2.6	4	2.8	3.1	3.8	4.3
3. Повторяемость ветра	%	14	15	19	16	12	19	3	3	2	6	6	4

Характеристики	Един. измер.	Направление ветра Ю			ЮЗ			З			СЗ		
		Дек.	Янв.	Февр.	Дек.	Янв.	Февр.	Дек.	Янв.	Февр.	Дек.	Янв.	Февр.
4. Температура воздуха	°С	-18.4	-19.8	-20.2	-18.6	-19.4	-18.2	-17.5	-19.8	-21.5	-26.9	-28.1	-27.1
5. Скорость ветра	м/сек.	4.3	5.1	4	3.8	4.7	3.9	3.3	3.4	3.7	3.3	3.3	3.5
6. Повторяемость ветра	%	7	9	8	24	26	20	21	19	18	9	10	10

Примечание:

Направления ветров

С - северное
СВ - северо-восточное
В - восточное
ЮВ - юго-восточное
Ю - южное
ЮЗ - юго-западное
З - западное
СЗ - северо западное

В целом, климатические условия в зоне производственной деятельности п.о. Пурнефтегаз являются суровыми, с ограниченными радиационными ресурсами (табл. 2.2.9.), дефицитом ультрафиолетовой радиации, недостаточными инсоляционными ресурсами (табл. 2.2.10.).

Таблица 2.2.9.

Основные характеристики широтных зон

Характеристики	Показатели
1. Широта	62.5°-67.5°
2. Репрезентативная широта	65°
3. Подзона УФ дефицита	значительного
4. Число месяцев:	
- биологической тьмы	2/дек.-январь/
- биологических сумерек	2/ноябрь, февраль/
- УФ дефицита	4/ноябрь-февраль/
5. Годовые дозы суммарной УФ радиации, кВт час/кв.м	
< 400 нм	55-60
< 315 нм	0.7-0.9

1430

Таблица 2.2.10.

Инсоляционные ресурсы климата

Характеристики	Январь	Февр.	Март	Апр.	Май	Июнь	Июль	Август	Сент.	Окт.	Ноябрь	Декабрь	Год
1. Полуденная высота солнца, градус	5.4	14.8	25.6	37.2	45.4	48.5	45.4	37	25.4	14	5	1.6	
2. Продолжительность дня, часы, мин.													
светового	5	8.27	11.38	15.08	18.4	24	20.22	16.39	13.09	9.48	6.19	3.42	
ультрафиолетового /ho > 10 /		3.28	9.45	13.05	15.18	18.15	17.1	14.4	11.2	6.55			
биологического /ho > 30 /				5.2	9.15	11	10	8.25					
3. Продолжительность солнечного сияния :													
ультрафиолетового, часы		64	139	213	210	200	252	176	86	38	7		
ультрафиолетового, %		91	85	96	93	98	88	88	81	25			
биологического, часы				95	145	137	160	105	24				
биологического, %				43	64	63	56	54	23				
4. Повторяемость /%/ непрерывной продолжительности солнечного сияния:													
< 4 часов	68	43	23	22	27	35	32	38	41	37	69		40
> 4 часов	32	57	77	78	73	65	68	62	59	63	31		60
5. Распределение солнечного сияния относительно полудня, процент:													
в близполуденные 4 часа	90	68	41	34	29	25	26	31	39	54	82	100	52
до полудня	38	42	46	47	46	47	49	47	46	41	40	45	46
после полудня	62	58	54	53	54	53	51	53	54	59	60	55	54

1431

Дискомфортность для проживания и хозяйственной деятельности людей усиливается низкими температурами воздуха в сочетании с ветром, большой продолжительностью холодного и отопительного периода, коротким летним периодом. Строительно-климатические характеристики территории приведены в таблице 2.2.11. (по метеостанции Тарко-Сале).

Таблица 2.2.11.

Строительно-климатические характеристики

Характеристики	Единцы измер.	Показатели
1. Расчетная температура самой холодной		
- однодневки	t C	-51
- пятидневки	-"-	-46
2. Продолжительность отопительного периода	дней	277
начало, средняя дата		10.09
конец, средняя дата		11.06
3. Средняя температура отопительного периода	t C	-12.8
4. Зимняя вентиляционная температура	-"-	-32
5. Расчетная скорость ветра	м/сек.	24
- на высоте 500 метров	-"-	30-44
6. Средняя месячная относительная влажность воздуха	%	79
7. Средняя из наибольших за зиму снеговая нагрузка на горизонтальную поверхность	кг/кв.м	200

Отрицательным фактором для ведения строительных работ является повсеместное распространение многолетнемерзлых пород. Суровые климатические условия территории значительно осложняют и соответственно удорожают строительство.

2.3. Гидрография и гидрология

Гидрографическая сеть района образована рекой Пур и его притоками.

Истоки Пура расположены на северных склонах Сибирских Увалов.

Площадь бассейна 118 тыс.кв.м, длина реки 780 км. Большую часть притоков принимает слева (Пякупур, Ягенетта, Евояха). Правые - Айваседапур, Харампур, Большая Хадырьяха, Табъяха, Ямсавей. Коэффициент извилистости равен 1.24-1.80 (табл. 2.3.1.).

1432

Таблица 2.3.1.

Гидрологические характеристики

Характеристики	Единицы измер.	Показатели
1. Годовой сток с поверхности бассейна р. Пура	мм в год	250-300
2. Средний слой стока половодья	мм	160-180
3. Минимальный сток рек	л/сек. с кв.км	6-8
4. Ледовый режим рек:		
- начало ледостава	дата	15-20 окт.
- конец ледостава	дата	25-30 мая
5. Продолжительность весеннего ледохода	дней	4-6
6. Средняя температура воды в летний период	С	12-16
7. Средняя скорость течения в межень	м/сек.	0.5-0.6
8. Средний коэффициент извилистости рек	К	1.82

Основное питание реки получают за счет таяния снегов и выпадения летне-осенних дождей. Подземное питание играет значительно меньшую роль. Осуществляется оно за счет слабонапорных вод четвертичных отложений, сравнительно хорошо связанных с поверхностными водами и разгружающихся в пределах эрозионных понижений и по речным долинам.

Для водного режима рек характерно хорошо выраженное весеннее половодье, летние и осенние паводки, продолжительная летне-осенняя и зимняя межени.

Весеннее половодье начинается в верхнем течении р.Пур в конце апреля, в среднем течении - в конце мая. Средняя продолжительность половодья 60-80 дней, а в отдельные годы растягивается до осени.

Летне-осенняя межень продолжается с августа до середины октября. Обильные дожди в конце лета и осенью вызывают паводки, обычно сливающиеся и обуславливающие общее повышение уровней.

В начале ледостава (вторая декада октября) и в первой половине зимы уровни иногда значительно поднимаются за счет стеснения русла льдом и шугой. Зимние меженные уровни по высоте обычно мало отличаются от летне - осенних меженных. На протяжении всей навигации р.Пур судоходна до Тарко-Сале.

1455

Бассейн реки изобилует озерами. Обычно озера мелководны до 2-3м глубиной, площадь до 1 кв.м и больше. Наибольшие по площади озера, к которым относятся Чертово (111 кв.м) и Часельское (52 кв.м),располагаются в южной части на междуречье Пура и Таза. Котловины озер, отличающиеся как правило, сглаженным рельефом дна, небольшими глубинами, отвесными береговыми уступами (высотой 0.5-1 м), имеют термокарстовое происхождение.

2.4. Растительность и почвы

Зона производственной деятельности п.о. Пурнефтегаз расположена в северотаежном районе. На хорошо дренированных песчаных 1ой и 2ой надпойменных террасах преобладают березово-лиственничные лишайниково-кустарничковые леса, где высота лиственницы 5-7 м, береза образует второй ярус. Большие площади заняты гарями, где в первом ярусе преобладает береза, позднее развивается подрост лиственницы.

Для заболоченных озерно-аллювиальных равнин характерны угнетенные редкостойные лиственничные мохово-кустарничковые и сфагново-кустарничковые леса. Большие площади заняты плоскобугристыми болотами. В поймах на сухих участках развиты кедрово-лиственничные лишайниковые или зеленомошные леса, на увлажненных - березово-кедрово-лиственничные кустарниково-сфагновые.

Растительность водоразделов представляет собой сочетание елово-лиственничных моховых лесов с массивами комплексных плоско- и крупнобугристых, а также грядово-мочажинных болот. На плоских надпойменных террасах рек Пякопура, Пурпе и частично Пура получили распространение сосново-кедровые и сосново-лиственничные леса на языковых подзолах и сосново-елово-кедровые леса на иллювиально-гумусовых подзолах. На поверхностях пологоувалистых озерно- аллювиальных равнин в южной части территории (район рек Айваседо- Пур, Харампур, Толька, на междуречьях притоков Варко-Сылькы) развиты сосновые лишайниковые с примесью ели, лиственницы и кедра леса на языковатых подзолах.

Доминантное положение среди северотаежных почв занимают подзолистые и глеево-подзолистые почвы на дренированных участках и таежные поверхностно-глеевые на суглинистых грунтах, а также сопутствующие им всевозможные сочетания таежных подзолисто-болотных почв.

1434

3. Определение основных потребителей газа для собственных нужд нефтедобычи в период 1993-2000 гг.

Как упоминалось в пункте 1.1., потребителями попутного газа внутри нефтедобывающего района являются котельные ДНС и ЦПС, установки предварительного сброса пластовой воды, размещаемые на ДНС, удаленных от центрального пункта сбора , установки подготовки нефти, входящие в состав центральных пунктов сбора нефти и газа. Кроме того, газ подается на собственные нужды поселка управлению эксплуатации и ремонта оборудования поселкового хозяйства.

Потребность в газе для собственных нужд на 1993 год принята по плану ПО Пурнефтегаз. Расчет потребности на последующие годы произведен по нормативам, выведенным на основании анализа работы предприятий производственных объединений Пур- и Ноябрьснефтегаз и анализа проектов обустройства месторождений.

Расход газа на котельные ДНС и ЦПС и на подготовку нефти определен по удельным нормативам на 1 тонну добываемой и подготавливаемой нефти.

Расход газа на УПСВ определен по удельному нормативу на 1 тонну жидкости, поступающей на УПСВ.

Кроме того, рассчитаны потери газа при его сборе и транспорте по утвержденному нормативу в % от объема использованного газа.

Потребность в газе на нужды поселка в период до 1996 года принята по данным производственного объединения с некоторым увеличением в период до 2000 года.

Результаты расчета потребности в газе на собственные нужды нефтепромыслов приведены в табл.3.1.

Перечень месторождений, вводимых в разработку в период до 2000 года в ПО Пурнефтегаз, динамика добычи нефти и жидкости, ресурсов попутного газа по разрабатываемым и вновь вводимым месторождениям, использованные в расчетах, приняты по материалам СибНИИНП, выполненным согласно соответствующему разделу данного Контракта.

Результаты расчета потребности в газе на собственные нужды нефтепромыслов приведены в табл.3.1.

Таблица 3.1.

Попутный газ на собственные нужды нефтепромыслов ПО Пурнефтегаз.

Наименование	план	р а с ч е т						
	1993	1994	1995	1996	1997	1998	1999	2000
Собственные нужды:								
-расход газа на котельные ДНС	15	17	18	23	28	32	33	35
-расход газа на котельные при ЦПС	37	42	47	53	60	65	69	73
-расход газа на УПСВ	10	10	12	12	14	15	15	16
-расход газа на УПН	145	153	160	182	221	241	254	262
-собственные нужды поселка /управление эксплуатации и ремонта оборудования поселкового хозяйства/	25	41	90	100	120	130	140	150
Потери газа при сборе и транспорте	28	32	33	68	90	94	94	92
Всего:	260	295	360	438	533	577	605	628

1435

4. Перечень объектов, потребных для сбора, подготовки и транспорта попутного газа в ПО Пурнефтегаз в период до 2000 г.

4.1. Дожимные насосные станции и установки подготовки нефти

На территории объединения функционируют 12 дожимных насосных станций суммарной установленной производительностью 91.8 тыс.т/сут. жидкости.

Показатели работы дожимных насосных станций на конец 1992 года, характеристика оборудования и условия сепарации приведены в таблице 1.3.1.

Для обеспечения добычи нефти в объеме 18,5 млн.т в 2000 году в объединении потребуется ввести в эксплуатацию 34 дожимных насосных станций производительностью 148,5 тыс.м3/сут.

Подготовка нефти для сдачи ее в систему магистрального транспорта осуществляется на Тарасовском центральном пункте сбора и подготовки нефти производительностью 3,0 млн.т/год.

При проектировании обустройства Тарасовского месторождения предполагалось расширение мощности установки подготовки нефти до 9 млн.т/год. Но в связи с изменившейся экономической ситуацией в стране, вводом в эксплуатацию низкодебитных месторождений, снижением объемов добычи в целом по региону, необходимость ввода УПН на 9,0 млн.т/год отпала. Поэтому расширения Тарасовского ЦПС на перспективу работой не предусмотрено.

В 1993 году будет введена в эксплуатацию установка подготовки нефти на Барсуковском месторождении производительностью 3,0 млн.т/год. Причем уже в 1996 году возникает необходимость в ее расширении до 6,0 млн.т/год.

Ввод Харампурской и Губкинской УПН намечен в 1994 году.

Подготовка нефти Северо-Губкинского месторождения будет осуществлятся непосредственно на месторождении.

В 1998 году планируется к вводу Восточно-Таркосалинская УПН.

Ввод мощностей установок подготовки нефти приведен в таблице 4.1.2.

Весь объем подготовленной нефти с месторождений по системе межпромысловых трубопроводов транспортируется на НПС "ПУР-ПЭ" и далее по системе магистральных трубопроводов в юго-западном направлении.

4.2. Объекты сбора и транспорта попутного газа.

Для сбора попутного газа в период до 2000 года потребуется построить 74 км газосборных сетей на 7 месторождениях. Расчет потребности в газосборных сетях, их характеристика и сроки ввода в эксплуатацию приведены в табл. 4.2.1.

1436

Потребность в строительстве межпромысловых газопроводов низкого давления, их характеристика и сроки ввода в эксплуатацию приведены в табл. 4.2.2. Суммарная протяженность низконапорных газопроводов, вводимых в этот период, составит 637,5 км.

Таблица 4.2.3 содержит сведения о сроках ввода и мощности компрессорных станций на базе винтовых компрессоров 7ВКГ-50/7, для газа УПН и концевой ступени сепарации нефтей, размещаемых на центральных пунктах сбора нефти и газа, и одной КС на Усть-Харампурской ДНС производительностью 50 млн.м3/год для дожатия газа I ступени сепарации Тапского месторождения.

Всего в период до 2000 года необходимо построить 6 КС суммарной производительностью 250 млн.м3/год.

Газопроводы высокого давления с компрессорными станциями для транспорта газа I ступени сепарации нефтей с месторождений, удаленных от потребителей, на расстояние свыше 60-70 км в данном разделе не рассматриваются.

Схема транспорта газа и размещения основных нефтепромысловых объектов приведена на рис. 4.2.1.

1437

Таблица 4.1.1.

Ввод дожимных насосных станций

шт/тыс.м3/сут. жидкости.

Наименование месторождения	Максимум добычи нефти млн.т/год	Наличие на 1.01. 1993г.	Годы 1993	1994	1995	1996	1997	1998	1999	2000	Всего
Разрабатываемые месторождения											
1.Барсуковское	2,57	2/20,0	1/36,0								1/36,0
2.Н.-Пурпейское	0,98	2/24,0									
3.Тарасовское	4,12	3/32,0 *	1/11,0		1/12,8						2/23,8
4.В.-Пурпейское	0,17	1/2,0									
5.Комсомольское	0,35	1/7,5		1/5,0							1/5,0
6.Харампурское	1,81	1/1,0									
7.Усть-Харампурское	0,09	1/5,0									
8.З.-Пурпейское	0,04	1/0,3									
9.С.-Тарасовское	0,21		1/1,8								1/1,8
Вновь вводимые месторождения											
10.Губкинское	0,28		1/5,0								1/5,0
11.Присклоновое	0,49		1/3.6								1/3.6
12.Ю.-Харампурское	1,94		1/9,0				1/9,0				2/18,0
13.Известинское	0,06		1/0,5								1/0,5
14.С.-Айваседопуровское	0,03										
15.С.-Губкинское	1,86			1/7,5				1/7,5			2/15,0
16.С.-Комсомольское	1,16			1/3,5					1/3,5		2/7,0
17.Фестивальное	0,25			1/2,5							1/2,5
18.Вост.-Таркосалинское	0,68				1/3,0					1/3,0	2/6,0
19.Зап.-Таркосалинское	0,13										
20.Меретояхинское	0,40				1/3,5						1/3,5
21.Кынское	1,15					1/7,5					1/7,5
22.Ср.-Харампурское	0,06						1/1,0				1/1,0
23.Текто-Харампурско	0,07						1/0,5				1/0,5
24.Еты-Пуровское	0,10					1/1,0					1/1,0
25.Усть-Часельское	0,25						1/2,0				1/2,0

Продолжение таблицы 4.1.1.

Наименование месторождения	Максимум добычи нефти млн.т/год	Наличие на 1.01. 1993г.	Годы 1993	1994	1995	1996	1997	1998	1999	2000	Всего
26.Равнинное	0,32						1/2,5				1/2,5
27.Юмантыльское	0,11								1/1,0		1/1,0
28.Тапское	0,12							1/0,5			1/0,5
29.Верхне-Часельское	0,22							1/1,0			1/1,0
30.Ново-Часельское	0,12							1/0,5			1/0,5
31.Холмистое	0,28							1/0,5			1/0,5
32.Чатылькинское	0,34								1/0,5		1/0,5
33.Южно-Танловское	0,33									1/0,5	1/0,5
34.Ханчейское	0,18								1/0,5		1/0,5
35.Добровольское	0,02										
36.Карасевское	0,02										
37.Черничное	0,07									1/1,0	1/1,0
38.Яровое	0,02										
39.Акайтемское	0,01										
40.Сев.-Йохтурское											
Итого		12/91,8	7/66,9	4/18,5	3/19,3	2/8,5	5/15,0	5/10,0	4/5,5	3/4,5	33/148,2

Примечание. *)Временная ДНС-4 не учитывается.

Таблица 4.1.2.

Ввод установок подготовки нефти

млн.т/год.

Наименование	Наличие на1.01.1993г.г	1993	1994	1995	1996	1997	1998	1999	2000	Всего
Тарасовский ЦПС										
Ввод УПН	-	-	-	-	-	-	-	-	-	-
Мощность УПН	3,0	3,0	3,0	3,0	3,0	3,0	3,0	3,0	3,0	
Барсуковский ЦПС										
Ввод УПН	-	-	3,0	-	3,0	-	-	-	-	6,0
Мощность УПН	-	-	3,0	3,0	6,0	6,0	6,0	6,0	6,0	
Харампурский ЦПС										
Ввод УПН	-	-	4,0	-	-	-	-	-	-	4,0
Мощность УПН	-	-	4,0	4,0	4,0	4,0	4,0	4,0	4,0	
Восточно-Таркосалинский ЦПС										
Ввод УПН	-	-	-	-	-	-	-	1,0	-	1,0
Мощность УПН	-	-	-	-	-	-	1,0	1,0		
Кынский ЦПС										
Ввод УПН	-	-	-	-	1,0	-	-	-	-	1,0
Мощность УПН	-	-	-	-	1,0	1,0	1,0	1,0	1,0	
Губкинский ЦПС										
Ввод УПН	-	-	1,0	-	-	-	1,0	-	-	2,0
Мощность УПН	-	-	1,0	1,0	1,0	1,0	2,0	2,0	2,0	
Северо-Губкинский ЦПС										
Ввод УПН	-	-	-	1,0	-	-	1,0	-	-	2,0
Мощность УПН	-	-	-	1,0	1,0	1,0	2,0	2,0	2,0	

Таблица 4.2.1.

Характеристика газосборных сетей, вводимых в период до 2000 года

п/п	Наименование объекта		Макс.объем перекачки млн.м3/год	Протяженность,км	Диаметр, мм	Толщина стенки, мм	Давление, МПа Рн.	Рк.	Пропускная способность млн.м3/год	Год ввода
1	2		3	4	5	6	7	8	9	10
1.	Тарасовское									
	ДНС5-т.5		530	6.0	530	8	5.63	4.40	565	1993
2.	Барсуковское,всего			14.0						
	в том числе:									
	ДНС4-т.3	1н.	650	3.4	530	8	5.78	4.58	962	1993
		2н.	650	3.4	530	8	5.78	4.58	962	1993
	т.1-т.3	2н.	150	7.2	325	6	5.62	4.58	162	1993
3.	Северо-Губкинское									
	ДНС2-ДНС1		1100	15.0	820	8	7.00	6.50	1190	1998
4.	Южно-Харампурское									
	ДНС2-т.1		750	1.0	325	6	6.50	3.70	767	1997
5.	Северо-Комсомольское									
	ДНС2-КС		1900	16.0	720	8	6.00	2.00	1934	1999
6.	Восточно-Таркосалинское									
	ДНС2-т.1		50	15.0	219	6	6.50	4.00	62	2000
7.	Комсомольское									
	ДНС2-т.1		1000	7.0	530	7	6.50	4.03	1000	1994
	ВСЕГО			74.0						1993
	в том числе									
				20.0						1994
				7.0						1994
				1.0						1997
				15.0						1998
				16.0						1999
				15.0						2000

1441

Таблица 4.2.2.

Характеристика межпромысловых газопроводов низкого давления, вводимых в период до 2000 года

n/n	Наименование объекта	Макс.объем перекачки млн.м3/год	Протяженность,км	Диаметр, мм	Толщина стенки, мм	Давление, МПа Рн.	Рк.	Пропускная способность млн.м3/год	Год ввода
1	2	3	4	5	6	7	8	9	10
1.	Губкинское-Губкинский ГПЗ	1030	22.5	720	7	7.0	2.5	1325	1994
2.	Присклоновое-Северо-Губкинское	60	20.0	325	5	7.0	6.5	83	1997
3.	Северо-Тарасовское-ДНС4 Тарасовское	24	25.0	273	5	7.0	6.6	38	1994
4.	Северо-Губкинское-Губкинский ГПЗ	2850	70.0	1220	8	6.5	2.5	3000	1996
5.	Меретояхинское-Южно-Танловкое	95	29.0	325	5	6.5	4.5	124	1995
6.	Известинское-Губкинский ГПЗ	14	18.0	159	5	6.5	2.5	30	1997
7.	Фестивальное-Южно-Харампурское	380	33.0	530	8	7.0	4.7	480	1995
8.	Южно-Харампурское-Харампурское	1700	41.0	1020	10	4.7	1.9	2125	1994
9.	Средне-Харампурское-Харампурское	14	20.0	159	5	6.5	1.9	26	1997
10.	Текто-Харампурское-Южно-Харампурское	19	10.0	159	5	6.5	4.7	20	1997
11.	Еты-Пуровское-Вынгояхинское	14	30.0	219	5	6.5	6.0	21	1998
12.	Усть-Часельское-Кынское	150	25.0	426	7	6.5	2.5	287	1998
		1425	25.0	426	7	27.0	2.5	1500	1998
13.	Юмантыльское-Восточно-Таркосалинское	19	29.0	159	5	6.5	2.5	21	1999

Продолжение таблицы 4.2.2.

1	2	3	4	5	6	7	8	9	10
14.	Тапское-Усть-Харампурское	48	46.0	273	5	6.5	1.0	61	1999
15.	Верхне-Часельское-Кынское	260	30.0	426	6	6.5	2.5	304	2000
16.	Ново-Часельское-Кынское	30	34.0	219	5	6.5	2.5	45	2000
17.	Южно-Танловское-Верхне-Пурпейское	170	20.0	325	5	8.0	4.7	207	2000
18.	Ханчейское-Восточно-Таркосалинское	620	60.0	720	7	6.5	2.5	1037	2000
19.	Черничное-Усть-Часельское	28	75.0	219	5	6.5	2.5	32	2000
	Всего		637.5						
	в том числе:								
			88.5						1994
			62.0						1995
			70.0						1996
			68.0						1997
			55.0						1998
			75.0						1999
			219.0						2000

1445

Таблица 4.2.3.

Ввод компрессорных станций для газа УПН и концевой ступени сепарации нефтей

шт./млн.м3/год

п/п	Наименование объекта	1993	1994	1995	1996	1997	1998	1999	2000
1.	Харампурская								
	7ВКГ-50/7 всего	-	1/50	-/50	-	-	-	-	-
	в том числе								
	2раб. + 1рез. 1 оч.	-	1/50	-	-	-	-	-	-
	2раб. 2 оч.	-	-	-/50	-	-	-	-	-
2.	Губкинская								
	7ВКГ-50/7 1раб. + 1рез.	-	1/25	-	-	-	-	-	-
3.	Восточно-Таркосалинская								
	7ВКГ-50/7 1раб. + 1рез.	-	-	-	1/25	-	-	-	-
4.	Кынская								
	7ВКГ-50/7 1раб. + 1рез.	-	-	-	-	1/25	-	-	-
5.	Северо-Губкинская								
	7ВКГ-50/7 1раб. + 1рез.	-	-	-	1/25	-	-	-	-
6.	Тапская для транспорта газа I ступени сепарации								
	7ВКГ-50/7 2раб. + 1рез.	-	-	-	-	-	-	1/50	-
	Всего	-	2/75	-/50	2/50	1/25	-	1/50	-

GYPROTYMENNEFTEGAS REPORT

(ENGLISH VERSION)

Fuel and Energetic Ministry

State Scientific-Research and Design Institute of Oil and Gas Industry after V.I.Muravlenko
(GYPROTYMENNEFTEGAS)

Increasing Tymen Region Gas and Natural Gas Liquids Utilization

USAID Preliminary Design Study

Technical Document for the section "Associated and Natural Gas Utilization in Tyumen Oblast Development"

Order 6234

TYUMEN, 1993

14416

Fuel and Energetic Ministry

State Scientific-Research and Design Institute of Oil and Gas Industry after V.I.Muravlenko
(GYPROTYMENNEFTEGAS)

Increasing Tymen Region Gas and Natural Gas Liquids Utilization

USAID Preliminary Design Study

Technical Document for the section "Associated and Natural Gas Utilization in Tyumen Oblast Development"

Order 6234

Director of the Instite — **U.A.Lukashkin**

Head of the Department of Feasibility Studies and Strategical Planning — **G.A.Feigin**

1447

TYUMEN, 1993

Content

Introduction 3

1. The Present State Associated Gas Output Analyses in Production Amalgamation Purneftegaz in Tyumen Region. 4
   - 1.1. Associated Gas Utilazation. 4
   - 1.2. Oil and Gas Storage Facilities and Preparation Functional Purpose. 5
     - 1.2.1. Oil Preparation and Gathering System. 5
     - 1.2.2. Gathering System Facilities. 5
     - 1.2.3. Oil and Gas Preparation Equipment. 6
     - 1.2.4. Oil and Gas Preparation and Gathering Principle Scheme in P.A. Purneftegas and Associated Gas. 7
   - 1.3. Storage Facilities, Oil and Associated Gas Preparation and Transportation Characteristic. 10
   - 1.4. Gathering Preparation and Associated Gas Transport Units Physical State. 16

2. Region Natural Conditions. 20
   - 2.1. Geologo-Ceomorphological conditions. 20
   - 2.2. Meteorological Conditions. 22
   - 2.3. Hydrography and Hydrogeology. 35
   - 2.4. Vegetation and Soils. 37

3. The Main Gas Consumers for Local Oil Production Need Definition for the Period of 1993-2000. 38

4. Units List Necessory for Associated Gas Gathering Preparation and Transportation in P.A.Purneftegas in period from Now Till 2000. 40
   - 4.1. Buffer Stations. 40
   - 4.2. Associated Gas Gathering and Transportation Units. 44

1417

INTRODUCTION

This paper is a part of a section "Associated and Natural Gas Utiluzation in Tyumen Oblast Development". It is carried out in accordance with Appendix I to our Contract with Bechtel Corporation "Increasing Tyumen Region Gas and Natural Gas Liquids Utilization", Design Tasks Identification USAID Preliminary Design Study.

In this paper associated gas utilization in P.A.Purneftegas in 1992 was carried out, principle scheme of oil and gas gathering, preparing, transport and sewage, utilization and refinement as well, storage facilities and preparation functional purpose was described; associated gas preparation and transport gathering system condition in 1992 as well.

According to the program Natural conditions description, involving geographical situation, meteorological conditions and topography is done here. This part carries the information about technological equipment requirement, need for technological equipment and transport communication design.

The next part of this paper contains the results of the calculated need in gas to satisfy the requirements of the oil-fields and is a part of an output and associated gas utilization balance. We need it to define gas volume which is delivered to processing or to natural gas main pipelines which then gets to the industrial districts for fuel needs.

This balance is also necessary for goods traffic definition when calculating inter oil-fields and main gas pipelines, compressor stations, which are at a distance more then 60-70 km.

In the last part the results of required volume of storage facilities and associated gas transport construction for the period 1993-2000, which allow to provide complete associated gas utilization in this Production Amalgamation beginning with 1996 are performed.

During our work we used technological data which were delivered by SibNIINP according to this very Contract.

Tyumen region and P.A. Purneftegas review maps were made ,on which transport communication and main oil-fields' units were shown.

1449

1. THE PRESENT STATE ASSOCIATED GAS OUTPUT ANALYSES IN PRODUCTION AMALGAMATION PURNEFTEGAS (TYUMEN REGION)

1.1. Associated Gas Utilization

In 1992 P.A. Purneftegas carried out development of 9 oil-fields: Novo-Purpejskoje, Komsomolskoje, Barsukovskoje, Verhne-Purpejskoje, Zapadno-Purpejskoje, Tarasovskoje, Harampurskoje and Ust-Harampurskoje. Two of them - Zapadno-Purpejskoje and Severo-Tarasovskoje were put into development in 1992, the rest of them in period 1985-1991.

Together with oil 3895.9 million cubic meters(mln.m3) of associated gas were extracted: 1384 mln.m3(35.5%) from Tarasovskoje oil-field,1270 mln.m3(32.6%) - from Barsukovskoje oil-field and 832 mln.m3(21.4%) from Komsomolskoje oil-field. Out of the rest 6 oil-fields 410 mln.m3 of associated gas where extracted that made 10.5% of all gas resources. The associated gas output was 2067.5 mln.m3 or 53.1% from the resources ,1828.4 mln.m3 of gas were burnt during the process. The output of gas destributed in the following way:

Oil-Field	Gas Output mln.m3	Utilization coefficient %	volume of gas burnt mln.m3
1. Novo-Purpejskoje	74.6	37.9	122.4
2. Komsomolskoje	831.6	99.9	0.1
3. Barsukovskoje	168.3	13.3	1101.9
4. Verhne-Purpejskoje	22.9	63.2	13.3
5. Zapadno-Purpejskoje	0.1	1.7	5.8
6. Tarasovskoje	969.5	70.1	413.9
7. Harampurskoje	0.5	0.3	169.1
8. Ust-Harampurskoje	-	-	1.8
9. Severo-Tarasovskoje	-	-	-
In total:	2067.5	53.1	1828.4

This gas utilization low level at all oil-fields but Komsomolskoje we can explain by Barsukovsk Compressor Station having not been put into operation, which was planned to compress gas in Barsukovskoje, Novo-Purpeyskoje, Verhne-Purpeyskoje and Zapadno-Purpeskoje oil-fields; gathering facilities absence as well as associated gas preparation and transport in Harampurskoje oil-field; big capacities for associated gas processing in Gunkinsk gas processing plant and abscence of big capacities for gas processing in Tarasovskoje oil-field.

Boiler-Houses of buffer station (DNS), stoves of the units for preliminary water flaving (UPSV), boiler-houses of CPS (main gathering points) where from gas consumers in the oil-fields in part of the gas deliver to the setlement Gubkinsk need for the Equipment Utilization and Repairing Office.

In total in 1992 189 mln.m3 of gas was used for the oil-fields need; 29 mln.m3 among them for setlement supply purpose; 1878 mln.m3 of gas was delivered to gas processing plant. Gas to this plant was delivered from Tarasovskoje, Komsomolskoje, Barsukovskoje oil-fields through gas pipelines under its own pressure.

1450

1.2. Oil and Gas Storage Facilities And Preparation Functional Purpose

1.2.1. Oil Preparation and Gathering System from Oil-Fields of P.A. PURNEFTEGAS

As soon as oil and gas gathering is carried out according to hermetic system that helps to exclude hydrocarbon losses almost completely, and it is easy can be automized.

One of the main element in gathering and preparation facilities are extractive wells, automized measuring unit (AGZU), buffer stations, oil, gas and water gathering and preparation central unit. All the elements of the system (unit) are connected with the help of pipelines. Gas liquid blend is delivered from extractive wells to automized measuring unit through the 89-159 mm tubes, further transportation goes through larger tubes.

Main princples of all elements work are the same for all oil-fields:

- at the automized measuring units (AGZU) the phases are not separated;
- at the buffer stations (DNS) the first step of separation is carried out, gas is removed through the collector. Water can be fault and then pumped into the pumping well;
- the second step is carried out at the water gathering and preparation central unit (CPS). Oil preparation technological process involve: phase separation; products deemulsation, desalting and oil stabilization. The last process is carried out together with deemulsation and desalting.

All the equipments are in block variant that allows to install them fast.

1.2.2. Gathering System Facilities

The main equipment of gathering system facilities are:

- pipelines from wells to AGZV and collectors,
- Block automized measuring units,
- buffer stations

Pipelines made of unwelded joint hotrolled tubes are used for oil and gas-field communication.

Block automized measuring units are used for well debit automatic measuring, having oil and gas one-tube gathering system facilities to control the liquid delivery in a working well, and to block the well or the system itself if there arises damage or break down automatically. Block automized measuring units (AGZU) "Sputnik" type are used in P.A. Purneftegas in 10 wells and 14 engaged well. Working pressure here is - 1.6; 2.5 and 4.0 MPa. These units help to measure oil debit with the next parameters, as:

oil viscosity MPA C,	not more than	80.0
water part in oil,	not more than	0.95
paraffinum part,	not more than	0.07
hydrogen sulphide and aggressive layer water content which provoke corrosion higher than 0.3 gr\m3 in hour		is not allowed.

Measure small debit wells product quantity,block small gabarit unit "BIUS-40" are used. This unit can measure products with the following parameters:

viscosity, mPaC,	not more than	80.0
hydrogen sulphide and aggressive layer water content that provike corrosion higher than 0.3gr\m3 in hour		is not allowed.
gas factor m3\t,	not more than	100.0

1451

To carry out oil and gas first step separation to accomplish further liquid transport with centrifugal pumps and gas transport under separation pressure - buffer stations (DNS) are used.

The station is consists of technological shield,sewer blocks and damage gas fault spark-plug(candle), technological capacity with hydrocyclone technological block, two centrifugal pumps, one of which is reserve. Technological block pumping part is made in a closed type because of severe climate of this district.

1.2.3 Oil and Gas Preparation Equipment

Separation Units

Horizontal separators made within our country are used in P.A. Purneftegas separators, two phases type NGS and UBS which separate gas from liquid and three phases type UPS separating and fualting free water.

Separators are installed in the oil gathering and preparation central point and are the first step separator in the field, where the well products are delivered to gathering cenral point GPS because of the rest layer energy Barsukovsk and Tarasovsk GPS). NGS type untits are used in the following steps, including hot separation at the end step. UBS - type separators are mainly used as the first step separators. Abstraction NGS oil and gas horisontal separator. Separators with liquid carrying capacity 2000-30000 t\day are produced too.

Separators UBS-type are units with preliminary gas selection. Preliminary separation and division into layers of gas liquid blend takes place at the end of the pipeline and in depulsator and from this place separated gas is drawn aside but the final liquid and gas division is carried out in separation capacity. Abriviation UBS - block separation unit. Passport liquid carrying capacity is provided at gas factor till 120 m3\t.

UPS-type unit are produced for gas from irrigated oil and free layer water fault division dehydrated oil and water carring out are calculated either. Abriviation UPS-preliminary water fault unit. If UPS is used during the first step separation gas-depulsation preliminary fault unit is installed products delivering to UPS can have gas factor till 90-120 m3\t, irrigation till 90% after coming out the products is 20-30%.

Oil Heaters and Furnace

Heaters and furnaces are designed for oil emulsation heating in front of deep irrigation and desalting blocks. Oil heaters NN-2.5 and NN-6.3 (figures define heat production oil block heaters BN-2M, block tubular furnace PTB-10.)

Heaters NN type are designed for emulsation heating where water does not provoke salt sedimenation on the tubes wells heater BN-2M and PTB-10 furnace are used for oil emulsion with salt sediment and mechanical admixtures capacity heating.

Settlers and Electrodehydrators

Settlers are designed for oil emulsion settlement to devide them into oil and layer water after the emulsion is heated in block or common furnoces. Horizontal settler, volume 200 cubic meters (m3) are produced by our plans. Gravitational separation and emulsion rinsing effect is the main principle of settlers operation both in drenage and in highconcentrated emulsion intermediate layer which operates as separating filter.

1452

Electrodehydrator EG-200-10 is used for deep dehydration and desalting in oil preparation units, volume 200 m3, working pressure - 10 MPa. Electrdehydrator is different from the settler because of 2 horisontal electrode the power is directed to with 44 KWt industrial frequency. Dehydrated emulsion 20 - 30% is directed to the separation units inlet. Temperature is 40 - 50°C. Oil coming out after dehydration is not more than 0,5 %.

Oil Reservoirs

Oil reservoirs are vessels were oil can be evaluated and stored for some time. Mainly cylinder steel vessels PBC type volume from 100 till 10000 m3 are used.

Compressors

To increase the pressure and oil separation ending step till 0,6 - 0,7 MPa block compressors unit "Takat" on the volume screw compressors 7VKG-50/7 are used. Technical data of this compressors:

productivity	cubic meters/minute	52
absolute pressure	MPa	
-suction		0.8-0.12
-supercharging		0.7
gas temperature inlet	°C	5 - 45
electroengine:		
-type		BAO-500L-2V2
rotation frequency	min -1	3000
tension current,	V	6000
power,consumed by compressor	KWt	270

All oil and gas preparation equipment is produced by our country plans.

1.2.4. Oil and Gas Preparation and Gathering

Principle Scheme in P.A. Purneftegas

Irrigated well oil with gas dissolved in it goes through measuring unit and preliminary gas selection unit (UPO) goes into the 1-st hydrocyclon separator, where gas separation under pressure 0,7 - 0,8 MPa (fig.1.2.4.1) takes place.

Gas, being separated in hydrocyclon separator with UPO-gas comes into technological vessel, where liquid drops are separated from gas. After this vessel gas comes into gas collector and under separation pressure is transported to consumers.

A preservative valve installed on the technological vessel which works if the pressure in the vessel is more than 0,9 MPa. When the valve works gas goes to a torch.

DNS - preliminary gas selection unit allows not only unload units and pipelines but decrease dynamic loading to them.

After the 1-st step separators the liquid goes to the preliminary water fault unit (UPSV). This unit satisfies all the technological requirements. This preliminary water fault allows to prevent falldawn and ice cork in local pipelines.

From UPSV dehydrated oil partialy comes into buffer vessel. Here additional liquid separation takes place (because of pressure difference between the 1-st step units and buffer vessel). From buffer vessel irrigated oil comes to the pumps through which it

is pumped into CPS. Layer water being sedimented in UPSV is delivered into sewage cleaning technological unit under its own pressure.

At the main gathering point oil emulsion comes into a preliminary settler then reagent solution and hot water are delivered into oil-emulsion line to create more favourable condition for oil-emulsion exfoliation.Almost 20% of sediment layer water is dehydrated in settlers, temperature 15°C.

After measuring isolated water goes to the refinary units and 20% of emulsion goes to a heater where it is heated to t 40°C. Reagent demulgator solution is delivered before the heating starts. Heating emulsion then goes through dearating process in intermediate separator under pressure 0,6 MPa and t=40°C.

Intermediate step separation gas goes to compressor station to increase the 1-st step separation gas pressure and together with it goes to consumers.

Isolated from gas oil emulsion goes to the final preparation into electrodehydrator. In electrodehydrator phase "oil-water" separation takes place under electric field power.

Prepared oil with gas solved in it goes first to end-line separators where gas is completely separated from oil under pressure 0,105 MPa. Separated gas goes to compressors to be compressed and then transported to consumers. The separated oil is gathered in reservoirs and then after being measured goes to transportation system.

Layer water, separated from oil gas to hot water vessel, excess go to refinary facilities to futher preparation and utilization in PPD (layer pressure support system) system.

Oil containing flow that goes to refinaries involves:

- layer water, which is separated from oil during technological process;
- rainflow from technological sites and refinary units;
- escape from technological equipment to water injecting to layer.

Sewage cleaning accoroling to the requirements is fulfilled with the help of settler PBC-5000 type with two-beam distributing mechanism of VNIISPTnefts' design.

Reservoir - settler capacity PBC - 5000 is 12000 m3/day.

Layer water goes straight to reservoir-settlers under technological units pressure. Settlement process is dynamic with continuous layer water coming in and technological - rain flows. Refinds flows are pumped into local pump station with the help of block pump station and then it is used in PPD system.

After settlement process, separated oil goes to an oil reception and pumping out block V=16 m3, where from it is pumped unto crude oil pipeline.

1464

Principle Oil & Gas Gathering Scheme

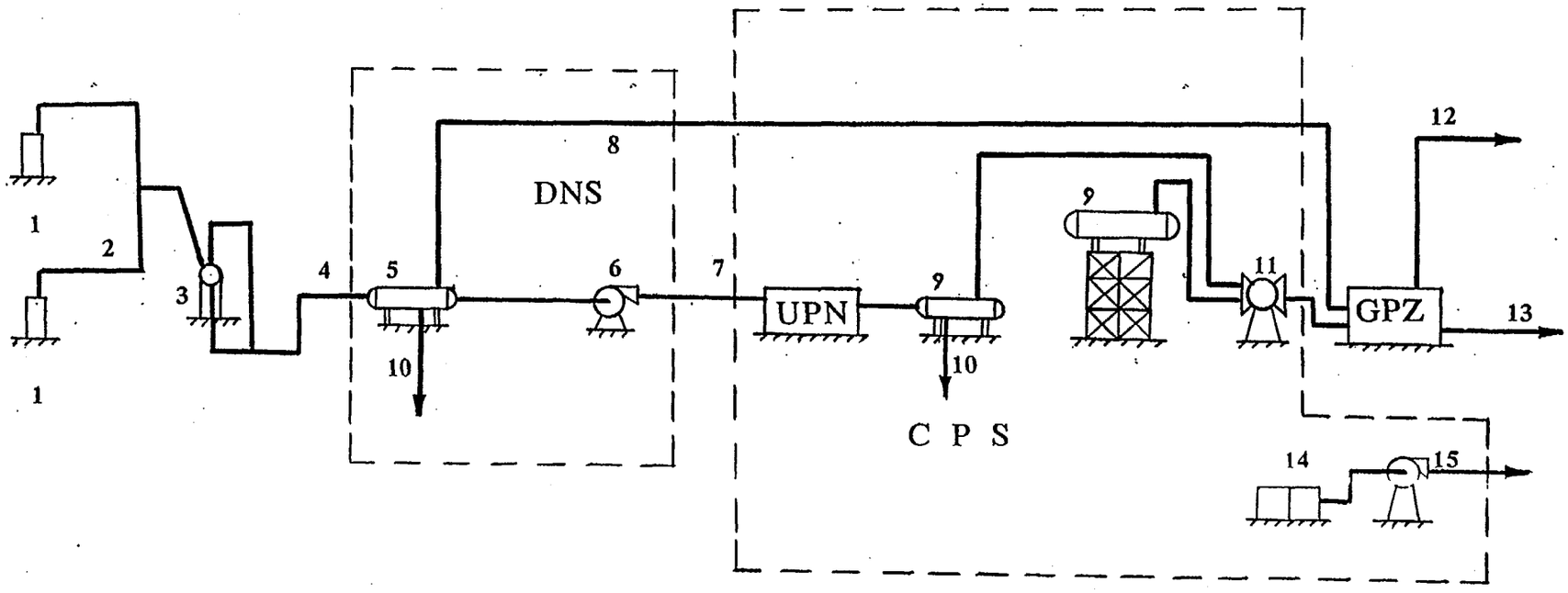

1 - Well
2 - Oil pipelines from well to measuring unit
3 - measuring unit (ZU)
4 - oil gathering nets
5 - 1-st step separator
6 - pumping station
7 - pumping pipeline
8 - 2-d · step separating gas
9 - end-step separating gas
10 - water for cleaning facilities
11 - compressor station for UPN-gas and end-step oil separation
12 - ungasoline gas
13 - natural gas liquids
14 - oil reservoirs
15 - trade oil

Figure 1.2.4.1.

1.3. Storage Facilities, Oil and Associated Gas Preparation and Transportation Characteristic

Buffer Stations (DNS)

By the end of 1992 in P.A. Purneftegas there were 13 buffer stations. The pumping volume made 8.87 mln.m3/year.

Well products gathering system is hermetic, one-pipelined. Well products goes to ZU measuring unit under the pressure 1.5 MPa where they measure oil and gas wells debit. From ZU oil and gas go to buffer station, through oil gathering pipeline, where the 1-st step separation takes place (in some oil-fields at BS they perform the 2-d separation step under atmospheric pressure).

In table 1.3.1. BS productivity is shown. Project and real separation conditions were compared in developing oil-fields.

Central Gathering Points

By the end of 1992 in P.A. Purneftegas oil preparation was carried out only in Tarasovsk CPS.

It was designed by the project that for oil preparation they should use UPN-Germany with productivity 6 mln.t/year, and UPN 3 mln.t/year productivity made in Russia.

Construction in Tarasovsk CPS oil preparation tipical unit productivity 6.0 mln.t/year in closed type is defined by "CPS Delivery Schedule Germany, West Siberia Oil-fields Arrangement".

Technical data for this unit are worked out in Germany on the base of technical reference No 725 1 A-O, vol.1...3 and solutions made by Minnefteprom and "Hemianlagenbaukombinat" Leipzig - Grimma, Germany.

Technological Scheme UPN - Germany

Crude oil preliminary separated comes to DNS in separators of the 1-st step under pressure 0.8 MPa. Crude oil flow with t 30°C comes into separator where deaerating takes place, pressure P = 0.5 MPa (abs.). Preliminary oil dehydrating is carried out in settlers, that is why layer water content is decreased to 5 - 10 % (weight).

From settlers partially dehydrated oil comes to a buffer vessel which serves for dehydrated oil repumping. Under the pressure P = 0.4 MPa and t = 30°C additional oil and gas separation is carried out in buffer vessel.

Oil emulsion get to the furnace from the buffer vessel, here it is heated till t 40°C and then get to electrodehydrator where it comes through the final dehydration and desalting. Pumps help to keep pressure P = 0.7 MPa and prevents gas leaving electrodehydrators. Layer water content is decreased till 0.2 % weight, salt content till 40 mg/l.

After electrodehydrators UPN prepared oil comes to end-step separators made in Russia for final deaeirating and then to reservoir from which they are pumped into external oilpipeline.

End-step separator gas and intermediate step separation gas are compressed in compressor station.

1466

Table 1.3.1.

Productivity of Buffer Stations by the Begining of 1993

List	Existing facilities				Technical data					
	Type	Quantity (pieces)			Productivity mln.t/year		Separation conditions			
		In total	Working	In store	Project	Real	T project	T real	MPa,project	MPa,real
1.Barsukovskoje									1st. 2st.	
	DNS1a CNS 105-294	4	3	1	3,12	0,67	10	8-10	0,8	0,36
increased	DNS1b CNS 300-120	4	3	1	7,94		10	8-10	0,8	
	DNS2a CNS 105-490	4	3	1	3,12	1,9	10	8-10	0,8	0,4
increased	DNS2b CNS 300-240	4	3	1	5,90		10	8-10	0,8	
2.Novo-Purpejskoje										
	DNS1 NK 200-210A-G-1	7	5	2	8,4	0,6	10	8-10	0,8	0,2-0,32
	DNS2 NK 200-370A-G-1	5	4	1	5,87	0,4	10	8-10	0,8	0,3-0,35
3.Verhne-Purpejskoje										
	DNS1 CNS 105-29410	2	1	1	0,80	0,13	10	8-10	0,8 atm.	0,42
4.Tarasovskoje										
	DNS1 CNS 105-294	2	1	1	0,32	1,4	20	10-15	0,8 atm.	0,38-0,42
	DNS2 NK 200/210 1b	4	3	1	4,4	0,7	10	10-15	0,6	0,46-0,48
	DNS3 CNS 105-196	5	4	1	5,6	1,7	10	10-15	0,6	0,58
	DNS4 CNS 180-212	4	3	1	3,3	0,1	10	10-15	0,6	0,48-0,5
5.Komsomolskoje										
	DNS1 CNS 105-294	2	2	-	1,32	0,35	10		0,6	0,5-0,55
6.Harampurskoje										
	DNS1 CNS 105-196	2	1	1	2,76	0,44	5	5-10	0,6	0,5 0,2
7.Ust-Harampurskoje										
	DNS1 CNS 105-294	2	2	-	1,78	0,1	5	5-10	0,7	0,5
8.Zapadno-Purpejskoje										
	DNS1					0,38	5	5-10	0,7	0,22

Preparation technological parameters for Tarasovsk UPN Germany are corrected because they started to use Russia demulgators with more low demulgating activity, worse kinetic water separation and higher demulgation temperature according to SibNIINP letter.

UPN construction and starting will be devided into two steps:

1-st step UPN 3.0 mln.t/year
2-d step UPN 3.0.mln.t/year

The 1-st step involves typified UPN units with productivity 6.0 mln.t/year. Germany delivering for oil preparation dehydrated till 50%. The construction also involves reservoirs necessary for oil receiving from Harampurskoje oil-field.

Technological Units and Starting Complex List:

1.UPN Germany - 6.0 mln.t/year (1-st and 2-d steps of construction)
2.Reservoirs PBC - 10000 m3; quantity - 10 units
3.End-line separators ground
4.Gasequalizing system condencate collector
5.Condencate catcher point
6.Oil pumping station with control board, oil quality block
7.Turbosucker unit "Samphire"
8.Refinary units
9.Engineering supply units

To provide sumultaneous exploitation of starting complex and further expantion of CPS capacity at technological pipelines we use a unit, of steef frame and flange pairs joint (connection).

In Tarasovsk CPS there was built and started to operate the 1-st step UPN - 3 mln.t/year. Some corrections were made in preparation scheme (Buffer vessel and electrodehydrator do not operate yet). Some declinations were noticed in oil preparation technological parameters.

All the equipment that was presented and the one they use in the oil-field now their designed and real technological parameters are presentsd in table 1.3.2.

Associated gas gathering and transporting is perfomed through gas gathering nets and interfield (local) gas pipelines.

Gas collector can be reffered to gas gathering nets, they deliver gas from oil separating pump stations and gathering point, which is interfield gas pipeline starting point, through which gas goes outside of the oil-field.

DNS quantity defines gas gathering nets presence in the oil-field.

If there is one DNS in the oil-field there is no gas gathering nets. Gas transport from such an oil-field goes through interfield gas pipeline which direct gas to GPZ (Gas Processing Plant) or other consumer.

In tables 1.3.3 and 1.3.4 gas gathering nets and low pressure interfield gas pipelines are shown.

As we can understand looking at these tables, by the end of 1992 there were 103.6 km gas gathering nets, involving. 13 km in Novo-Purpeiskoje,46.2 km in Tarasovskoje and 44.4 km in Barsukovskoje fields. Low pressure interfield gas pipelines extent for Gubkinsk GPZ gas delivery was 276.9 km by the end of 1992.

1458

Table 1.3.2.

Cenral Gathering Points Design Conditions by the End of 1992

List	Existing facilities		Technical data					
	Type	Quantity (pieces)	Poductivity mln.t/year		Technological parameters			
			Project	Real	T°C Project	T°C Real	PMPa,Project	PMPa,Real
Tarasovskoje								
1. UPN								
CPS-UZO(DDR)								
Productivity								
-for oil			6.0	4.71				
-for liquid			11.5	5.96				
1.1 Separator	V-100m3	2			30	25	0.5	0.45-0.55
Settler	V-200m3	6						
Buffer capacity	V-100м3	2			30	-	0.4	-
electrodehydrator	V-200м3	4			40	-	0.7	-
2. UPN/Russian/								
Productivity								
-for oil			3.0					
-for liquid								
2.1 Separator	NGS11-10-3000-09Г2С,ГП49.00.000 V-100м3 Rcal.1 MPa	1			30	-	0.6	-
Heatchanger	ПТБ-10	2						
electrodehydrator	ЭК 200-10 V-100м3 Pcal .1 mPa	2			45	-	0.7	-
Emergency capacity	ЕПП 40-2400-1625-2-К V-40 m3	2						
3. Ending Separator	НГС11-10-3000-09Г2С,ГП49.00.000 V-100м3 Rcal.1 mPa	1			40	22	0.105	0.105

Table 1.3.3.

Gas Garhering Nets Parameters

List		Diameter, mm	Wall thickness, mm	Extent km	Pressure,MPa P starting	P ending	Temperature, °C	Efficiency mln.m3/year
1		2	3	4	5	6	7	8
1.Novo-Purpejskoje,								
in total:				13.0				
including:								
DNS1-p.1		426	7	5.6	5.48	5.02	10	258
DNS2-p.1		325	6	6.2	5.47	5.02	10	116
2. Tarasovskoje,								
in total				46.2				
including:								
DNS2-p.1	1 p.	426	7	1.1	6.80	5.82	10	936
p.1-p.2		1020	10	2.5	5.82	5.70	10	2191
p.2-p.3		1020	10	7.5	5.70	5.02	10	2908
p.3-p.5		1020	10	2.3	5.02	4.40	10	4686
DNS2-p.1	2 p.	426	7	1.1	6.80	5.82	10	936
p.5-GPZ		1020	10	5.6	4.40	2.20	10	4765
DNS3-p.2		530	8	9.0	7.24	5.70	10	743
DNS1-p.4		1020	10	0.3	5.06	5.05	10	1319
CPS-p.4		1020	10	0.9	5.79	5.06	10	8749
p.4-p.3		1020	10	1.0	5.06	5.02	10	1865
p.5-GPZ		530	8	5.6	4.40	2.20	10	807
DNS4-p.1		325	6	9.3	6.66	5.82	10	141
3. Barsukovskoje				44.4				
p.3-p.4	1p.	530	8	4.5	4.58	3.87	10	576
	2p.	530	8	4.5	4.58	3.87	10	576
p.4-p.5	1p.	720	8	7.0	3.87	3.10	10	1019
	2p.	720	8	7.0	3.87	3.10	10	1019
p.5-CS	1p.	720	8	5.9	3.10	2.50	10	875
	2p.	720	8	5.9	3.10	2.50	10	875
UPSV-p.8		89	4	0.3	4.32	4.31	10	1
p.8-p.4		530	8	1.1	4.31	3.87	10	902
DNS1-p.8		530	8	0.2	4.38	4.31	10	875
DNS2 - p.1		426	7	0.8	5.76	5.62	10	406
p.1 -p.3	1p.	325	6	7.2	5.62	4.58	10	162
In total:				103.6				

Reference: p. - point No

1460

Table 1.3.4.

Low-Pressure Interfield Gas Pipelines Parameters

List	diameter, mm	Wall thickness, mm	Extention, km	Pressure,MPa P starting	P ending	Efficiency mln.m3/year
1. Novo-Purpejskoje-Barsukovskoje	530	8	9.6	5.02	4.70	355
2. Tarasovsk CPS Gubkinsk GPZ	1020	10	64.0	6.00	2.50	2009
3. Barsukovskoje- p.1	720	8	28.6	4.57	4.03	756
4.p.1-Gubkinsk GPZ	820	8	23.2	4.03	2.50	1142
5. Komsomolskoje - p.1	426	6	1.0	4.61	4.03	1209
6. Verhne-Purpejskoje-Barsukovskoje	426	6	16.0	5.27	5.08	221
7. DNS-2 Barsukovskoje-Komsomolskoje	720	8	45.3	5.76	4.03	756
8. Komsomolskoje- Gubkinsk GPZ	720	8	23.8	4.03	2.50	756
9. Ust -Harampurskoje-Tarasovsk GPZ	426	6	38.9	7.00	2.20	249
10.Zapadno-Purpejskoje-Barsukovskoje	325	5	26.5	5.30	4.57	82
In total:			276.9			

1461

1.4. Gathering, Preparetion and Associated Gas Transport Units Physical State

One of the main problem which West Siberian oil people faced, is effective use of the main funds without accidents.

P.A. Purneftegas analyses showed that DNS of this district had considerable amplitude as it concerns age condition.

Wear and tear degree was defined by equipments standard service period.

Oil-fields put into exploitation by 1988 have considerable wear and tear degree of DNS equipment. That is Novo-Purpeisk DNS-1, Barsukovsk DNS-2 - 87% wear and tear degree, Tarasovsk DNS-1 - 75%, Novo-Purpejsk DNS-2 and Verhne-Purpejsk DNS - 63% wear and tear degree. The rest oil-fields have average and little wear and tear degree.

Phisical condition and wear and tear degree CPS was not discussed as the only operating CPS-Tarasovsk - is in construction process.

As soon as associated gas gathering and transportation starting point is behind oil-field development starting point , all gas pipelines are practically new they were in operating process 2-4 years. Their wear and tear degree makes 5-10%(gas pipelines operating standard service period is 40 years).

Equipment standard service period is established according to the state document 1990 "Single Standards Depreciations' Contributions for Fixed Funds of National Economic Complete Restoration".

Gas gathering nets and interfield low pressure gas pipelines physical condition is shown in tables 1.4.2 and 1.4.3.

Gathering preparation and associated gas transportation repair system formation in P.A Purneftegas should be carried out with repair and service production capacity of SibNeftegazpererabotka which will insure future joint central capital investment decrease when equipment is getting old.

14/62

Table 1.4.1.

Buffer Statiosn Physical Conditions by the End of 1992

List	Puting out data	Sevice period days	Wear and tear degree in standard service period of 8 years,%
1.Barsukovskoje			
DNS1A	1985	7	87
DNS2	1990	2	25
2.Novo-Purpejskoje			
DNS1	1985	7	87
DNS2	1987	5	63
3.Verhne-Purpejskoje			
DNS1	1987	5	63
4.Tarasovskoje			
DNS1	1986	6	75
DNS2	1988	4	50
DNS3	1990	2	25
5.Komsomolskoje			
DNS1	1988	4	50
6.Harampurskoje			
DNS1	1990	2	25
7.Ust-Harampurskoje			
DNS1	1992	0,5	5
8.Zapadno-Purpejskoje			
DNS1	1992	0,5	5

1463

Table 1.4.2.

Gas Gathering Nets Physical Conditions by the End of 1992

List		Extent km	Puting out data	Service period days	Wear and tear degree in standard service period of 8 years,%
1. Novo-Purpejskoje					
DNS1-p.1,	D-426	5.6	1989	3	7.5
DNS2-p.1,	D-325	6.2	1989	3	7.5
2. Tarasovskoje					
DNS2-p.1,	D-426 1n	1.1	1989	3	7.5
p.1-p.2,	D-1020	2.5	1989	3	7.5
p.2-p.3,	D-1020	7.5	1989	3	7.5
p.3-p.5,	D-1020	2.3	1989	3	7.5
DNS2-p.1,	D-426 2n	1.1	1990	2	5.0
p.5-ГПЗ,	D-1020	5.6	1990	2	5.0
DNS3-p.2,	D-530	9.0	1990	2	5.0
DNS1-p.4,	D-1020	0.3	1989	3	7.5
CPS-p.4,	D-1020	0.9	1989	3	7.5
p.4-p.3,	D-1020	1.0	1989	3	7.5
p.5-GPZ,	D-530	5.6	1990	2	5.0
DNS4-p.1,	D-325	9.3	1992	-	-
3. Barsukovskoje					
p.3-p.4,	D-530 1n	4.5	1990	2	5.0
	D-530 2n	4.5	1990	2	5.0
p.4-p.5,	D-720 1n	7.0	1990	2	5.0
	D-720 2n	7.0	1990	2	5.0
p.5-KS,	D-720 1n	5.9	1990	2	5.0
	D-720 2n	5.9	1990	2	5.0
UPSV-p.8,	D-89	0.3	1990	2	5.0
p.8-p.4,	D-530	1.1	1990	2	5.0
DNS1-p.8,	D-530	0.2	1990	2	5.0
DNS2-p.1,	D-426	0.8	1990	2	5.0
p.1-p.3,	D-325 1n	7.2	1990	2	5.0
In total		103.6			

464

Table 1.4.3.

Law Pressure Interfield Gas Pipelines Physical Conditions by the End of 1992

List		Extent km	Puting out data	Operating term	Wear and tear degree in standart service period of 40 years,%
1. Novo-Purpejskoje-Barsukovskoje	D 530-6	9.6	1988	4	10.0
2. Tarasovsk CPS-Gubkinsk GPZ	D 1020-10	64.0	1988	4	10.0
3. Barsukovskoje-t.1	D 720-8	28.6	1989	3	7.5
4. p.1-Gubkinsk GPZ	D 820-8	23.2	1989	3	7.5
5. Komsomolskoje-p.1	D 426-6	1.0	1989	3	7.5
6. Verhne-Purpejskoje-Barsukovskoje	D 426-6	16.0	1989	3	7.5
7. DNS2 Barsukovskoje-Komsomolskoje	D 720-8	45.3	1989	3	7.5
8. Komsomolskoje-Gubkinsk GPZ	D 720-8	23.8	1989	3	7.5
9. Ust-Harampurskij-Taracovsk GPZ	D 426-6	38.9	1990	2	5.0
10.Zapadno-Purpejskoje -Barsukovskoje	D 325-5	26.5	1992	-	-
In total:		276.9			

146

2. REGION NATURAL CONDITIONS

2.1. Geologo - Geomorphological Condithins

In geological respect the territory we work at is a part of young epigertzin West-Siberian plate. Low structures-tectonic layer forms crystallyne rock basement and upper layer of mezo-kijnozoy platform cover. Maximum cover capacity (4000-5500m) can be reffered to big negative structures and coincide with creek Pur and this tributaries calleys.

In platform cover basement is Jurassic sediments which involves continental, lagoon and sea facies, general capacity up to 1600m. All layers chalk sedimens, which are developed with paleogen rocks. Upper horizontal of the section are everywhere presented by quaternary sediments capacity thickness up to 200m. There are some genetic types of quaternary sediments: alluvial, alluvial-lake, marine, glacial-marine. Alluvial and alluvial-lake sediment complex is developed in rivers vallyes limits and from floodlands terraces and river floodlands. In this kind of places there are a lot of bogs sediments. In larger part of watershed territory there are marine and glacial-marine sediments(clay, sand-soils, loamy soils, sands with boulders, pebbles and gravels) but sand-soils and loamy soil sediments previal.

Sand rocks which are in majority in sections are very icesaturated and are caracterized by massive cryogenic texture. Their volume icing reaches 40-45% in syngenetic horizont sediments of modern Pur alluvial. The same high icing can be often met epicryogenic sands of floodlands terraces in places were sands are overlapped with peat. In the rest territory in alluvial sands of the 1-st and 2-nd floodlands terraces icing decreases up to 28-30%.

This district morphostructure main feature - generic caracter of its development; both positive and negative morphostructures are normally direct.

Pur and some other rivers stretching is submeridional. Average and small rivers (mainly they are submeridional orientation rivers tributaries) normally have sublatitude or close to it stretching.

On this territory there are both negative morpostructure - Tolskaja lowland and positive Nenetskaja and Taz-Purovskaja heights.

Investigated territory is situated in interrupted many years frozen rocks (MMP). For which geocryological conditions variety is peculiar thing. You can see it in freaquent places with hard; ced frozen and watersafuruted melt rocks alternation.But MMP caracter is different. In drenage parts of alluvial terraces of waterseparated surfaces MMP are situated in rage massive peat-bogs and in the North exposition of big slopes. MMP capacity can be changed from some meters to 150-200 m on waterseparated surfaces. Temperature -1°C - -4°C, but t=0°C,-1°C is more often met. This zone is highly icy. All MMP here are of epycryone origin.

A peculiar feature of this district - intensive modern MMP formation because of periodical climate changes and natural plant carier development,the season frozen depth is changes from 0.3-0.8 to 2.5-3.5 m.

Big hilly peat bogs took a lot of places here many alternation. Big and small frozen looping hillock, termocarst lakes and lowlands are typical here.

1466

The relief is flat here with some hills the main parameters of this relief are on table 2.1.1. In general geomorphological conditions of this district are not simple and it creates some problems when constructing industrial units.

Table 2.1.1.

Main Relief Parameters

Parameters	Marks of measurement	Data
1. Altitudes	m BS v.	50-100
2. Surface slope	degree	0.5-1.0
3. Reliefs' breaking up (Watersheds excluding under rivers' level)	m	5-15
4. Density of reliefs' breaking up (distance between nearest falling lots)	Km	average 2.4-1.8

1461

2.2. Meteorological Conditions

Production activity zone in P.A. Purneftegas is situated in high geographical lattitudes (64-66 NL) in Tyumen region North. It caused Sun radiation flow and cold climate formation. Month quantity of sun radiation which comes to the earth surface are shown in table 2.2.1. Maximum sub shining duration is in spring and summer time. During winter period the number of days without sun are 25-30 days per month (table 2.2.2).

Average annual air temperature is negative (-6.7°C)(table 2.2.3). Different season activity coming duty and their duration are shown in table (2.2.4).

Average annual precipitation is 460 mm. But the biggest precipitation is in summer period (table 2.2.5). Rains are not very intensive, often incessant. In winter time precipitation is accomponied by snow storm (average number of days with snow-storm is not more than 45 days per year).

Wind regime is caused by intensive cyclone - antycyclone atmosphere circulation and flat relief of the territory.In winter there are a lot of winds of south and south-west direction (till 49%). In summer there are mainly winds from the north direction - 39% (table 2.2.6 fig 2.2.1).

Wind parameters are in tables 2.2.7 and 2.2.8. As a whole, climate conditions in production activity zone in P.A. Purneftegas are severe with limited radiation reserves (table 2.2.9), ultra-violet radiation defecit, insufficient insolation reserves (table 2.2.10). Discomphortability for living and production activity of people here is increased by low air temperature sometimes wind, long cold and heating period ,short summer period. Construction-climatic parameters of this territory are shown in table 2.2.11 (Tarko-Sale weather forcast).

1468

Table 2.2.1.

Extremum Months' Quantity of Sun Radiation on Horizontal Surface

MD g/sq.m

Parameters	Sum	Janury	Febr.	March	April	May	June	July	August	Sept.	Oct.	Novem.	December
1. Extremum months' quantity of sun radiation on horizontal surface	Max	4.2	33.5	125.7	222.1	322.6	402.2	406.4	280.7	108.9	41.9	8.4	0
	Year	1977	1971	1976	1972	1970	1974	1974	1973	1975	1970	1976	1977
	Min	0	12.6	88	146.6	213.7	121.5	192.7	88	41.9	8.4	0	
	Year	1973	1975	1973	1977	1977	1968	1973	1970	1971	1965	1977	
2. Extremum months' quantity of diffused radiation	Max	12.6	54.5	163.4	259.8	385.5	360.3	305.9	230.4	146.6	79.6	25.1	8.4
	Year	1970	1974	1973	1969	1972	1970	1973	1970	1973	1976	1972	
	Min	8.4	41.9	134.1	192.7	318.4	272.4	234.6	176	100.6	62.8	16.8	4.2
	Year	1976	1977	1966	1977	1971	1974	1966	1977	1970	1965	1974	
3. Extremum months' quatity of summary radiation	Max	16.8	83.8	268.2	469.3	683	674.6	666.2	469.3	217.9	121.5	33.5	8.4
	Min	8.4	67	230.4	402.2	565.6	448.3	498.6	318.4	134.1	71.2	16.8	4.2
4. Extremum sums of radiation balance	Max	-37.7	-25.1	-21	83.8	360.3	368.7	335.2	201.1	88	0	-25.1	-41.9
	Min	-50.3	-58.7	-50.3	-12.6	163.4	196.9	238.8	146.6	58.7	-71.2	-62.8	-62.8

1491

Repeatition of Winds' and Calms Directions During the Year, Tarko-Sale

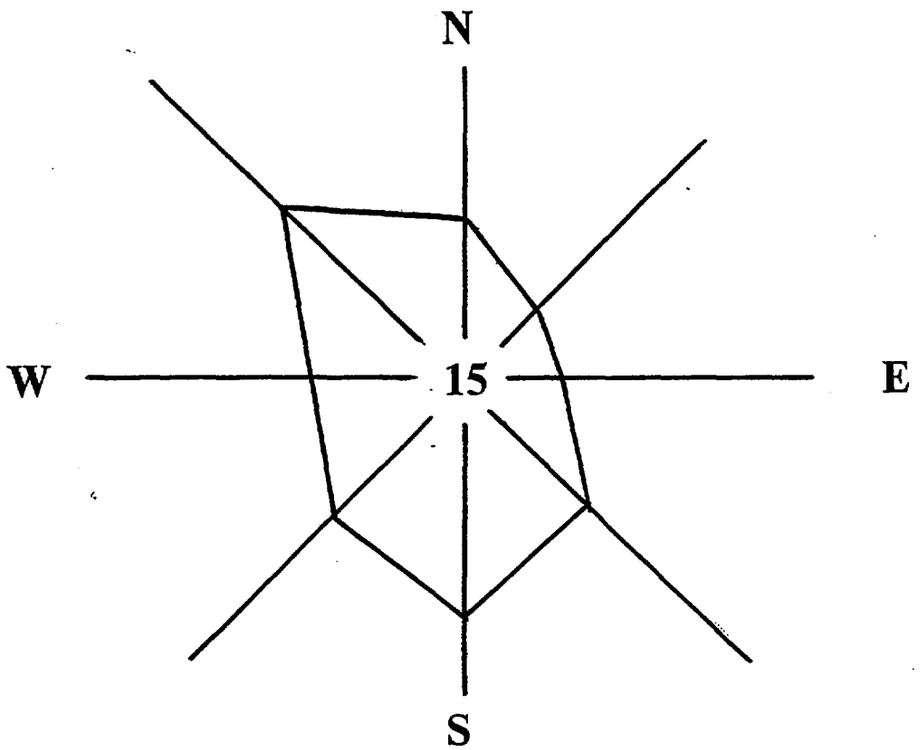

14470

Scale: 1 sm - 5%

Figure 2.2.1.

Table 2.2.2.

Sun Shining Duration

Parameters	Janury	Febr.	March	April	May	June	July	August	Sent.	Oct.	Nov.	December	Year
1. Sun shining duration, hours	13	70	164	221	226	217	286	195	98	47	28	1	1566
2. Sun shining duration, hours:													
- before noon	5.1	29.4	75.6	104.5	104.6	102.1	140.7	91.3	45.1	9.2	11.1	0.5	
- after noon	8.3	41.4	87.9	116.7	121.4	125.6	144.9	103.6	52.9	27.4	17	0.6	
3. Days without sun quantity	25	11	5	4	4	3	2	4	8	17	21	30	133

147

Table 2.2.3.

Temperature Regime Parameters

Parameters	Data
1. Air temperature, t ^{o}C:	
- mean value in year	-6.7
- mean value in month	
January	-25.0
May	-1.2
July	15.4
October	-4.7
- Max,July	+20.7
- Min,January	-45
2. Quantity of law-temperature days:	
bellow -30°C	35
-31 -45°C	18
bellow -45°C	2
3. Quantity of high-temperature days:	
+20	9.6
+25	0.5
4. Unfrosty period duration,days:	
- average	87
- max	124
- min	55
5. Heating period duration,days:	
- average	274
- min	252
- max	306

1472

Table 2.2.4.

Beginning Duty and Duration of Different Nature Phenomens

Nature Phenomens	Date: Day,Month
1. Average date of mean value days' temperature passing through value 10-5 C(in falling period)	
10 C	29 Aug.
0 C	2 Oct.
-5 C	16 Oct.
2. Average date:	
1/ snow-cover:	
- earliest of appearence	6 Sent.
- appearence	3 Oct.
- stabilisation	12 Oct.
2/ stable frost:	
- coming	15 Oct.
- cessation	12 Apr.
3/ snow-cover:	
- destruction	18 May
- going out	23 May
- the latest of going out	9 Jun
3. Average date of mean value days' temperature passing through value 10-5 C(in acsent period)	
-5 C	28 Apr.
0 C	21 May
10 C	16 Jun
4. Early frost date	
- mean value of the last	6 Jun
- the latest of the last	21 Jun
- earlyst of the first	5 Aug.
- mean value of the first	25 Sent.
5. Periods' duration,days:	
- without frosty	87
- with snow-cover	224
- stable frost	189

1473

Table 2.2.5.

Precipitation Parameters

Parameters	Marks of measurment	Date
1. Average quantity:		
-in year	mm	461
-in months:		
January	-"-	19
May	-"-	35
July	-"-	65
October	-"-	46
2. Quantity of days with precipitations:		
- in year	days	203
- in months:		
January	-"-	18.4
May	-"-	15.5
July	-"-	13.9
October	-"-	21.9
3. Average duration periods of:		
-raining	days	3.3
-without raining	-"-	5.1
4. Quantity of days with thunder-storm		
- average	days	14
- max	-"-	26
- continue	hour	25.9
5. Quantity of days with snow-storm		
- average	days	45
- max	-"-	50
- duration	hour	314
6. Relative air hamidiaty		
- mean value for year	%	77
- April	-"-	79
- June	-"-	69
- October	-"-	86

1474

Table 2.2.6.

Repeatition of Wind and Calms' Direction

in persents

Parameters	N	NE	E	SE	S	SW	W	MW	Calm
Months:									
Janury	5	3	7	17	27	22	11	8	21
May	17	9	7	11	12	8	10	26	8
June	19	12	7	9	10	7	10	26	9
July	24	15	8	9	7	8	8	21	14
Sentember	11	10	7	14	17	14	13	14	16
October	10	6	7	10	20	19	14	14	12
Year	12	8	7	12	17	14	11	19	15
Average wind velocity in direction, m/sec:									
- January	3.1	2.8	3.6	4	5	4.6	3.8	3.4	
- June	3.9	3.7	3.4	3.5	3.3	3.2	3.2	3.9	

Table 2.2.7.

Winds' Parameters

Parameters	Marks of measurement	Date
1. Average winds' velocity		
- Year	m/sec.	3.7
- Month:		
January	-"-	3.4
July	-"-	3.5
2. Maximum winds' velocity appear once in a year (possible):		
	m/sec	20
10 years	-"-	25
20 years	-"-	27
3. Average quantity of windy days in year:		
8 m/sec. and more	days	83
12 m/sec. and more	-"-	22
15 m/sec. and more	-"-	39

476

Table 2.2.8.

Some Parameters of Temperature and Wind Regime in 3 the Most Cold Months (December-February)

Parameters	Marks of measurement	Wind direction											
		N			NE			E			SE		
		Dec.	Jan.	Febr.	Dec.	Jan.	Febr.	Dec.	Jan.	Febr.	Dec.	Jan.	Febr.
1. Air temperature	°C	-30.7	-30.4	-31.1	-29.2	-28.4	-32.4	-27.3	-25.2	-27	-22.6	-22	-20.3
2. Wind velocity	m/sec.	2.5	3.4	3	2.8	2.9	2.6	2.6	4	2.8	3.1	3.8	4.3
3. Wind repeatition	%	14	15	19	16	12	19	3	3	2	6	6	4

Parameters	Marks of measurement	Wind direction											
		S			SW			W			NW		
		Dec.	Jan.	Febr.	Dec.	Jan.	Febr.	Dec.	Jan.	Febr.	Dec.	Jan.	Febr.
4. Air temperature	°C	-18.4	-19.8	-20.2	-18.6	-19.4	-18.2	-17.5	-19.8	-21.5	-26.9	-28.1	-27.1
5. Wind velocity	m/sec.	4.3	5.1	4	3.8	4.7	3.9	3.3	3.4	3.7	3.3	3.3	3.5
6. Wind repeatition	%	7	9	8	24	26	20	21	19	18	9	10	10

Reference:

Winds' directions:

N - North
NE - North-East
E - East
SE - South-East
S - South
SW - South-West
W - West
NW - Noth-West

Table 2.2.9.

Main Parameters of Latitude Zones

Parameters	Data
1. Latitude	62.5° - 67.5°
2. Representative latitude	65°
3. Subzone of ultra-violet deficit	considerable
4. Quantity of months of:	
- biological darkness	2/Dec.-January/
- biological twilight	2/November, Febriary/
- ultra-violet deficit	4/November February/
5. Annual doze of ultra-violet rediation, kWt hour/sq.m	
< 400 nm	55-60
< 315 nm	0.7-0.9

1478

Table 2.2.10.

Insolational Climate Resources

Parameters	Janury	Febr.	March	April	May	June	July	August	Sent.	Oct.	Nov.	Dec.	Year
1. Midlday sun height, degree	5.4	14.8	25.6	37.2	45.4	48.5	45.4	37	25.4	14	5	1.6	
2. Day duration, hours,min.													
light day	5	8.27	11.38	15.08	18.4	24	20.22	16.39	13.09	9.48	6.19	3.42	
ultra-violet /ho > 10/		3.28	9.45	13.05	15.18	18.15	17.1	14.4	11.2	6.55			
biological /ho > 30/				5.2	9.15	11	10	8.25					
3. Sun duration:													
ultra-violet,hours													
ultra-violet, %		64	139	213	210	200	252	176	86	38	7		
biological, hours		91	85	96	93	98	88	88	81	25			
biological, %				95	145	137	160	105	24				
				43	64	63	56	54	23				
4. Sun radiance persistent duration repeatition													
< 4 hours	68	43	23	22	27	35	32	38	41	37	69		40
> 4 hours	32	57	77	78	73	65	68	62	59	63	31		60
5. Distribution of sun radiance about noon,%													
before noon 4 hours	90	68	41	34	29	25	26	31	39	54	82	100	52
before noon	38	42	46	47	46	47	49	47	46	41	40	45	46
after noon	62	58	54	53	54	53	51	53	54	59	60	55	54

Table 2.2.11.

Construction Climate Parameters

Parameters	Marks of measurement		Data
1. Calculative temperature of the most cold of			
- one-day period	t °C		-51
- five-day parid	-"-		-46
2. Heating period duration	days		277
start, average date			10.09
end, average date			11.06
3. Average temperature of heating period	t °C		-12.8
4. Ventilational winter temperature	-"-		-32
5. Calculative winds' velocity on the	m/sec.	24	
- high of 500 meters	-"-		30-44
6. Relative air humidity average for month	%		79
7. Average from maximum snow loading on horizontal surface	kg/sq.m		200

1480

2.3. Hydrography and Hydrogeology

Hydrographic net of this district is formed by Pur river and its tributaries.

Pur Sources are situated on Sibirsky Uval north slopes. The lenth of the river is 780 km. There are more tributaries are on the left side of the river (Pjakupur, Jagenetta, Evojaha). Right tributaries are: Ijvacedapur, Harampur, Bolshaja Haderjahta, Tabjahta, Jamsavej. Twisting coefficient is 1.24 - 1.80 (table 2.3.1).

The main source for river comes from melting snow and summer-autumn rains. Underground waters are not very important here, they come from quaternary sediments connected rather well with surface waters, erosion lowlands and river valleies. Spring water flow is different from summer and autumn high waters. Spring water flow start the beginning of Pur river at the end of April and in the middle of the river by the end of May.Average high waters duration 60-80 days and sometimes it is prolonged till autumn.

Summer-autumn snow-storm is from August till the middle of October. Strong rains at the end of summer and autumn cause high waters which influence water level.

At the beginning of icefixing (the second part of October) and in the first part of winter water level sometimes increases because of ice sometimes winter levels do not differ very much from summer-autumn water level. During all navigation period river Pur is navigable as far as Tarko-Sale.

There are a lot of lakes in river basin, but they are not very deep: 2-3m depth, square 1m2 and more. The largest lakes are Tchertovo(111km2) and Tchaselskoje (52km2) they are situated between Pur and Taz. Lakes hollows are caractrized by smoothed bottom relief, small depth, sheer banks(0.5-1m) and are of thermocarst origin.

1481

Table 2.3.1.

Hydrological Parameters

Parameters	Marks of measurement	Data
1. Annual water flowing from Pur river ponds' surface	mm per year	250-300
2. Average layer of water flowing in spring flood	mm	160-180
3. Minimum of rivers water flowing	l/sec. c sq.km	6-8
4. Ice-age river regime		
- starting icefixing	date	15-20 oct.
- ending icefixing	date	25-30 may
5. Spring ice flowing	days	4-6
6. Duration average temperature of water in summer	t °C	12-16
7. Average velocity of at the lowest water level period	m/sec	0.5-0.6
8. Average twisting coefficient	-	1.82

1482

2.4. Vegetation and Soils

Production activity zone of P.A. Purneftegas is situated in Northtaiga district.

Well drenaged sand flood bands terraces the preveil birch-leaf-bearing, lichen-shrub forests, one leaf-beating tree is 5-7 m, birches form the second circle.

For march-ridden lake-allusial flat counrty depressed leaf-bearing and moss-shrubs and bog-moss-shrubs are very frequent. There are a lot of flat hilly bogs. In dry places there are cedar-leaf-bearing kichen or green forest and in more wet places there are birch-cedar-leaf-bearing bog-moss shrubs.

Vegetation of watersheds presents a combination of fir-leaf-bearing moss forrest with massif of complex flat and hillock bogs. On flat flood lands terraces of rivers PjakuPur, Purpe and Pur there are pine-cedarand pine-leaf-bearing forrests and pine-fir-cedar forrests. On lake alluvial lowlands(near rivers Ijvacedopur, Harampur, Tolka there are pines, lichens with firs, leaf-bearings and cedars.

Podsol soils dominate among north taiga oils and all kinds of podsol-log soils accomponing them.

1480

3. MAIN GAS CONSUMERS FOR LOCAL OIL PRODUCTION NEED DEFINITION FOR THE PERIOD OF 1993-2000

As it was mentioned in item 1.1 associated gas consumers within oil production district are boilers DNS and CPS, preliminary layer water fault unit, which are placed in DNS moved away from gathering central place, oil preparation unit which are part of oil and gas gathering central place. Besides, gas is delivered to satisfy local district needs.

Gas requirement for local enterprises was planned in P.A. Purneftegas. Gas requirements calculation was done according to the standards which were based on the production Amalgamations analyses.

Gas consumption far boilers DNS and CPS and for oil preparation was defined according to the standards for 1 ton of produced and prepared oil.

Gas consumption for UPSV was defined according to the standard for 1ton of liquid delivered to UPSV.

Besides, gas losses (while it was gathered and transported) according to the standards in % from the consumed gas volume.

Gas requirement for local enterprises was defined after analysing the enterprises data for gas consumption.

The result of this analyses shown in Table 3.1.

Oil-field list which will be put into development for the period up to 2000 in P.A. Purneftegas, oil and gas production dynamic, associated gas resources in developing oil-fields which were used in calculation was done according to the material done by SibNIINP as we had agreed in this Contract.

Gas consumption calculation for the local needs is shown in Table 3.1.

1484

Table 3.1.

Associated Gas to Satisfy Local Needs of Oil Enterprises of P.A. Purneftegas

List	project			culation				
	1993	1994	1995	1996	1997	1998	1999	2000
Local needs:								
-gas expension for:								
-DNSs' boiler-houses	15	17	18	23	28	32	33	35
-CPSs' boiler-houses	37	42	47	53	60	65	69	73
-UPSV for	10	10	12	12	14	15	15	16
-UPN for	145	153	160	182	221	241	254	262
-local settlements' needs								
-gas loss during								
-local settlements' needs	25	41	90	100	120	130	140	150
-gas losses during								
gathering and transport	28	32	33	68	90	94	94	92
In total:	260	295	360	438	533	577	605	628

1485

4. UNITS LIST, NECESSARY FOR ASSOCIATED GAS GATHERING, PREPARARION AND TRANSPORTATION IN P.A.PURNEFTEGAS IN PERIOD FROM NOW TILL 2000

4.1. Buffer Stations

There are operating 12 buffer stations liquids with common capacity 91.8 thousand tons a day.

The results of buffer stations working by the end of 1992, equipment parameters and separation conditions are shown in Table 1.3.1.

To provide oil production in volume 18.5 mln.tons in 2000 in P.A.Purneftegas they have to put into exploitation 34 buffer stations with productivity 148500 m3 / day.

Oil preparation to deliver it into the main pipeline is carried in Tarasovskoje central gathering and oil preparation place, productivity 3.0 mln.t/year. Moreover in 1996 there will appear necessity to increase it till 6.0 mln.t/year.

Harampursk and Gubkinsk UPN's putting into operation was planned in 1994.

Severo-Gubkinsk oil preparation will be carred out in the oil-field itself.

In 1998 Vostochno-Tarkosalinsk UPN is planned to be put into operation. Oil preparation units capacity puting into operation is shown in Table 4.1.2.

All the volume of preparated oil will be delivered to NPS "Pur-Pe" (pumping passing station), which is the head station of main pipeline, and then through the main pipeline system in South-West direction.

1486

Table 4.1.1.

DNS Puting into Operation

p./thousand m3 / day liquid

List	Oil output mln.t/year	Existing till 1.01. 1993	Years 1993	1994	1995	1996	1997	1998	1999	2000	In total
Developing oil-fields											
1.Barsukovskoje	2,57	2/20,0	1/36,0								1/36,0
2.Novo-Purpejskoje	0,98	2/24,0									
3.Tarasovskoje	4,12	3/32,0 *	1/11,0		1/12,8						2/23,8
4.Verhne-Purpejskoje	0,17	1/2,0									
5.Komsomolskoje	0,35	1/7,5		1/5,0							1/5,0
6.Harampurskoje	1,81	1/1,0									
7.Ust-harampurskoje	0,09	1/5,0									
8.Zapadno-Purpejskoje	0,04	1/0,3									
9.Severo-Tarasovskoje	0,21		1/1,8								1/1,8
Oil-Fields Puting into operation											
10.Gubkinskoje	0,28		1/5,0								1/5,0
11.Prisklonovoje	0,49		1/3.6								1/3.6
12.Ujgno-Harampurskoje	1,94		1/9,0				1/9,0				2/18,0
13.Izvestinskoje	0,06		1/0,5								1/0,5
14.Severo-Ajvasedopurovskoje	0,03										
15.Severo-Gubkinskoje	1,86			1/7,5				1/7,5			2/15,0
16.Severo-Komsomolskoje	1,16			1/3,5					1/3,5		2/7,0
17.Festivalnoje	0,25			1/2,5							1/2,5
18.Vostochno-Tarkosalinskoje	0,68				1/3,0					1/3,0	2/6,0
19.Zapadno-Tarkosalinskoje	0,13										
20.Meretojahinskoje	0,40				1/3,5						1/3,5
21.Kinskoje	1,15					1/7,5					1/7,5

1967

Table 4.1.1. sequel

List	Oil output mln.t/year	Existing till 1.01. 1993	Years 1993	1994	1995	1996	1997	1998	1999	2000	In total
22.Sredne-Harampur-skoje	0,06						1/1,0				1/1,0
23.Tekto-Harampur-skoje	0,07						1/0,5				1/0,5
24.Eti-Purovskoje	0,10					1/1,0					1/1,0
25.Ust-Chaselskoje	0,25						1/2,0				1/2,0
26.Ravninnoje	0,32						1/2,5				1/2,5
27.Ujmantilskoje	0,11								1/1,0		1/1,0
28.Tapskoje	0,12							1/0,5			1/0,5
29.Verhne-Chaselskoje	0,22							1/1,0			1/1,0
30.Novo-Chaselskoje	0,12							1/0,5			1/0,5
31.Holmistoje	0,28							1/0,5			1/0,5
32.Chatilkinskoje	0,34								1/0,5		1/0,5
33.Ujgno-Tanlovskoje	0,33									1/0,5	1/0,5
34.Hanchejskoje	0,18								1/0,5		1/0,5
35.Dobrovolskoje	0,02										
36.Karasevskoje	0,02										
37.Chernichnoje	0,07									1/1,0	1/1,0
38.Jarovoje	0,02										
39.Akajtemskoje	0,01										
In total		12/91,8	7/66,9	4/18,5	3/19,3	2/8,5	5/15,0	5/10,0	4/5,5	3/4,5	33/148,2

Reference: *) Provisional DNS-4 hasn't been taken into account

Table 4.1.2.

Oil Preparation Units Puting into Operation

mln. t / year

List existing	till 1.01.93	1993	1994	1995	1996	1997	1998	1999	2000	in total
Tarasovsk CPS										
introduction	-	-	-	-	-	-	-	-	-	-
capacity	3,0	3,0	3,0	3,0	3,0	3,0	3,0	3,0	3,0	
Barsykovsk CPS										
introduction	-	-	3,0	-	3,0	-	-	-	-	6,0
capacity	-	-	3,0	3,0	6,0	6,0	6,0	6,0	6,0	
Harampursk CPS										
introduction	-	-	4,0	-	-	-	-	-	-	4,0
capacity	-	-	4,0	4,0	4,0	4,0	4,0	4,0	4,0	
Vostochno-Tarkosalinsk CPS										
introdaction	-	-	-	-	-	-	-	1,0	-	1,0
capacity	-	-	-	-	-	-	1,0	1,0		
Kinsk CPS										
introduction	-	-	-	-	1,0	-	-	-	-	1,0
capacity	-	-	-	-	1,0	1,0	1,0	1,0	1,0	
Gubkinsk CPS										
intrpduction	-	-	1,0	-	-	-	1,0	-	-	2,0
capacity	-	-	1,0	1,0	1,0	1,0	2,0	2,0	2,0	
Severo-Gubkinsk CPS										
introduction	-	-	-	1,0	-	-	1,0	-	-	2,0
capacity	-	-	-	1,0	1,0	1,0	2,0	2,0	2,0	

1989

4.2. Associated Gas Gathering and Transportation Units

There will be necessary to build 74 gas gathering nets in 7 oil-fields to gather associated gas from the period till 2000.

Requirements in inter oil-field gas pipelines with low pressure construction, their parameters and their data puting into operation are shown in Table 4.2.2. Total lowpressure gas pipelines stretching that will be put into operation will make 637,5 km.

Table 4.2.3. contains all the data about compressor stations(CS) putting into operation on the base of screw compressors 7 VKG-50/7 for gas UPN and end step of oil separation place and one CS in Ust-Harampursk buffer station capacity 530 mln.m3/year to increase pressure of 1-st step separated gas from Tapskoje oil-field.

In total for the period from now till 2000 it is necessary to build 6 CS, joint productivity 250 mln.m3/year.

High pressure gas pipelines with compressors stations for gas transportation of the 1-st oil separation from oil-fields which are situated at a distance more than 60 - 70 km are not shown here.

Gas transportation the main oil productivity units placing scheme is shown on the fig 4.2.1.

1490

Table 4.2.1.

Parameters of Gas Gathering Nets Puting into Operation till 2000

No	List	Maximum pumping volume mln.m3/year	Extent Km	Dia-meter mm	Well thick-ness mm	Pressure MPa Ps	Pf	Carrying capacity mln.m3/year	Data
1	2	3	4	5	6	7	8	9	10
1.Tarasovskoje									
	DNS5 - p.5	530	6.0	530	8	5.63	4.40	565	1993
2.Barsukovskoje,in total			14.0						
including:									
	DNS4 - p.3 1n.	650	3.4	530	8	5.78	4.58	962	1993
	2n.	650	3.4	530	8	5.78	4.58	962	1993
	p.1 - p.3 2n.	150	7.2	325	6	5.62	4.58	162	1993
3.Severo-Gubkiskoje									
	DNS2 - DNS1	1100	15.0	820	8	7.00	6.50	1190	1998
4.Ujgno-Harampurskoje									
	DNS2 - p.1	750	1.0	325	6	6.50	3.70	767	1997
5.Severo-Komsomolskoje									
	DNS2 - CS	1900	16.0	720	8	6.00	2.00	1934	1999
6.Vostochno-Tarkosalinskoje									
	DNS2 - p.1	50	15.0	219	6	6.50	4.00	62	2000
7.Komsomolskoje									
	DNS2 - p.1	1000	7.0	530	7	6.50	4.03	1000	1994
	In total		74.0						1993
	including								
			20.0						1994
			7.0						1994
			1.0						1997
			15.0						1998
			16.0						1999
			15.0						2000

Referene: Ps - starting pressure
Pf - finishing pressure

Table 4.2.2.

Parameters of Interfield Gas Law-Pressure Pipelines Puting into Operation till 2000

No	List	Maximum pumping volume mln.m3/year	Extent Km	Diameter mm	Well thickness mm	Pressure MPa Ps	Pf	Carrying capacity mln.m3/year	Data
1	2	3	4	5	6	7	8	9	10
1.	Gubkinskoje - Gubkinsk GPZ	1030	22.5	720	7	7.0	2.5	1325	1994
2.	Prisklonovoje - Severo-Gubkinskoje	60	20.0	325	5	7.0	6.5	83	1997
3.	Severo-Tarasovskoje - DNS4 - Tarasovskoje	24	25.0	273	5	7.0	6.6	38	1994
4.	Severo-Gubkinskoje - Gubkinsk GPZ	2850	70.0	1220	8	6.5	2.5	3000	1996
	Meretojahinskoje - Ujgno-Tanlovskoje	95	29.0	325	5	6.5	4.5	124	1995
6.	Izvestinskoje - Gubkinsk GPZ	14	18.0	159	5	6.5	2.5	30	1997
7.	Festivalnoje - Ujgno-Harampurskoje	380	33.0	530	8	7.0	4.7	480	1995
8.	Ujgno-Harampurskoje - Harampurskoje	1700	41.0	1020	10	4.7	1.9	2125	1994
9.	Sredne-Harampurskoje - Harampurskoje	14	20.0	159	5	6.5	1.9	26	1997
10.	Tekto-Harampurskoje - Ujgno-Harampurskoje	19	10.0	159	5	6.5	4.7	20	1997
11.	Eti-Purovskoje - Vingo-Jahinskoje	14	30.0	219	5	6.5	6.0	21	1998
12.	Ust-Chaselskoje - Kinskoje	150	25.0	426	7	6.5	2.5	287	1998
		1425	25.0	426	7	27.0	2.5	1500	1998
13.	Ujmantilskoje - Vostochno-Tarkosalinskoje	19	29.0	159	5	6.5	2.5	21	1999

Table 4.2.2. sequel

1	2	3	4	5	6	7	8	9	10
14.	Tapskoje - Ust-Harampurskoje	48	46.0	273	5	6.5	1.0	61	1999
15.	Verhne-Chaselskoje - Kinskoje	260	30.0	426	6	6.5	2.5	304	2000
16.	Novo-Chaselskoje - Kinskoje	30	34.0	219	5	6.5	2.5	45	2000
17.	Ujgno-Tanlovskoje - Verhne-Purpejskoje	170	20.0	325	5	8.0	4.7	207	2000
18.	Hanchejskoje - Vostochno-Tarkosalinskoje	620	60.0	720	7	6.5	2.5	1037	2000
19.	Chernichnoje - Ust-Chaselskoje	28	75.0	219	5	6.5	2.5	32	2000
	In total		637.5						
	including:								
			88.5						1994
			62.0						1995
			70.0						1996
			68.0						1997
			55.0						1998
			75.0						1999
			219.0						2000

Table 4.2.3.

Compressor Stations for U P N - Gas and End-Step Oil Separation Puting into Operation

p./mln.m3/year

NO List	1993	1994	1995	1996	1997	1998	1999	2000
1. Harampursk								
7VKG - 50/7								
in total	-	1/50	-/50	-	-	-	-	-
including								
2op. + 2r. 1stage	-	1/50	-	-	-	-	-	-
2op. 2stage	-	-	-/50	-	-	-	-	-
2.Gubkinsk								
7VKG - 50/7								
1op. + 1r.	-	1/25	-	-	-	-	-	-
3.Vostochno-Tarkosalinsk								
7VKG - 50/7								
1op. + 1r.	-	-	-	1/25	-	-	-	-
4.Kinsk								
7VKG - 50/7								
1op. + 1r.	-	-	-	-	1/25	-	-	-
5.Severo-Gubkinsk								
7VKG - 50/7								
1op. + 1r.	-	-	-	1/25	-	-	-	-
6.Tapsk to transport gas ofthe 1-st step separating								
7VKG - 50/7								
2op. + 1r.	-	-	-	-	-	-	1/50	-
In total	-	2/75	-/50	2/50	1/25	-	1/50	-

BECHTEL TRIP REPORT

1436

BECHTEL CORP.
ASSOCIATED GAS UTILIZATION STUDY
TRIP REPORT
MAY, 1993

CONTENTS

I. INTRODUCTION

II. CONCLUSIONS AND RECOMMENDATIONS

III. OIL FIELD AND PRODUCTION DATA

IV. PUMP STATIONS (GOSPS)

V. GAS PLANTS

A. EXISTING FACILITIES
B. ALTERNATIVES
C. PROCESS DESIGN

VI. PIPELINES

A. NGL PIPELINES
B. LEAN GAS PIPELINES
C. WET GAS PIPELINES

VII. NGL/LPG LOADING FACILITIES

VIII. ECONOMICS

IX. TABLES

TABLE 1 CRUDE OIL AND ASSOCIATED GAS PRODUCTION
TABLE 2 CRUDE FIELD GAS COMPOSITION
TABLE 3 CRUDE OIL, ASSOCIATED GAS, AND NGL RATE

X. FIGURES

FIGURE 1 RESERVOIRS IN PUR REGION
FIGURE 2 CXeMA (NGL PIPELINE SCHEMATIC)

14916

I. INTRODUCTION

From May 10 through May 31, a Bechtel mission team consisting of Ed Swain, Doug Elliott, Roger Chen, D. V. Kumar, and David Haim visited Russia to coordinate activities and gather data for the associated gas utilization study. Meetings were held in Moscow with World Bank, United States Agency for International Development (USAID), Ministry of Fuels & Energy, Purneftegas and Nipigazperabotka to orient the team, arrange logistics and itineraries, to present the objectives of each party, and to share data. Meetings were held with Nipigazperabotka (NIPI) in Kraznodar to coordinate activities, establish schedules and communications channels, and to share data. Meetings were held with Subneftegazperabotka (SNGP) and NIPI in Nizhnevartok, in which SNGP's priorities and data were communicated. Meetings were held in Gupkinski with Purneftegas and Nipigazperabotka, in which the concerns and data of Purneftegas were discussed. The team toured the gas plants at Gupkinski and Nizhnevartok, and flew over the facilities at Belozerny, Terasovski and Kharampur.

II. CONCLUSIONS AND RECOMMENDATIONS

1. The geographic distribution of future gas processing capacity in the Purneftegas region must be based on economic analyses. Gupkinski, Terasovski, and Kharampur are the possible sites for locating gas processing capacity.

2. Substantial discrepancies exist between SNGP's projected natural gas liquids (NGL) volumes available at gas plants, and NGL volumes computed by Bechtel from composition data provided by Purneftegas.

3. The economic studies evaluating alternatives for recovery of associated gas must include revenues from incremental crude oil sales. A portion of the cash flow from crude oil sales should contribute toward debt amortization.

4. The economic viability of the project depends on the ability to market (export) associated gas and liquified petroleum gas (LPG) products at world market prices.

5. The reinjection of NGLs into subterranean formations should be considered as an alternative to flaring or transporting to market.

6. There is no clear consensus regarding the transport of LPG by rail. Opponents of the concept cite safety considerations, rail capacity limitations, and high transport costs. Proponents view the approach as an expeditious short-term solution to the gas utilization problem in the Pur region.

7. The quality of crude oil in the Purneftegas region is excellent, with a typical specific gravity of 0.875 (30.2 degrees API) and only traces of sulfur. Currently, 9.44 million metric tons per year (MTA) of crude oil (186,300 BPD) and 3.766 billion cubic meters per year (BCM/A) of gas (364 MMSCF/D) are produced from thirteen fields in this region. By the year 2000, forty-one fields in this region are projected to produce 15.420 MTA (304,300 BPD) of crude oil and 9.831 BCM/A (951 MMSCF/D) of gas.

8. The Kharampur oil field in the Purneftegas region demands particular attention, because its typical production is 100 tons per day (720 BPD) per well, compared with 35 tons per day (252 BPD) per well in other fields in the region.

1497

9. Price controls render SNGP's gas processing activities uneconomical. Revenue from dry gas (3,000 rubles per cubic meter) and LPG (10,000 rubles per metric ton) is reportedly less than the cost of production. The cost of wet gas is fixed at 1125 rubles per thousand cubic meters, and the cost of electricity is escalating rapidly.

10. One possible means of enhancing SNGP's profitability is the marketing, to the export market, of individual LPG products (butane, propane, etc.) fractionated from the wide fraction NGL. The individual components are valued approximately 30 percent higher than the wide fraction NGL. Fractionation services could be provided by the Tobolsk refinery.

11. Interbureaucratic rivalries result in competition for limited funds. Purneftegas fears that the need for gas recovery in the Pur area will be sacrificed if funds are applied to problems in other oil producing areas in the Tyumen region. SNGP similarly fears that its underutilized gas processing capacity may be bypassed. Solutions must be formulated which address the needs of both entities.

12. SNGP has indicated that funds have been committed to complete the first two gas processing trains at Gupkinski in 1993.

13. Out of 180 kilometers of 530 millimeter diameter wet gas pipeline planned to connect Kharampur with Gupkinski, approximately 20 kilometers have been laid near Gupkinski.

14. Generally, maintenance standards of gas plants and connected facilities are lax.

15. The existing gas plants are designed and constructed so as to require a large plot plan. Older Western gas plants are similarly configured, but the current trend is toward compact, modularized processing units. Advantages of modularization include reduced construction time and economies in material and foundation requirements. A modularized train with a capacity of 1 BCM/A may also be relocated to meet changing production requirements, resulting in extended service life.

16. Pipeline construction projects in Russia typically include infrastructure components which represent approximately 15 percent of total project costs. These infrastructure requirements must be included in pipeline cost estimates.

17. A number of questions regarding the Noyabrsk rail terminal require clarification:

    - What hydrocarbon materials are planned to be shipped from Noyabrsk? NGL? Fractionated LPGs? Refined products?
    - What is the source of these materials? Gas Plants? Refineries? Oilfield separators?
    - Where will these materials be stored to absorb temporal imbalances between inflows and outflows? Noyabrsk? Gupkinski? Above ground? Below ground?
    - What is the capacity of the existing rail line, and what is its current and projected level of utilization?

18. The proposed Russian NGL pipeline code requires an all-weather road parallelling the pipeline, a 3-kilometer distance from developed land use, and a limitation on pipe diameter. Bechtel recommends that, in lieu of these requirements, NGL pipeline design, construction, operation and maintenance be in accordance with ASME B31.4, with the supplementary

1498

conditions listed in Section (VI)(A) of this report. A consensus must be achieved early in the study regarding the approach to be used as the basis for pipeline cost estimates.

19. Numerous inconsistencies in reported details were observed, including pipeline lengths, distances, and projected flow rates. Such inconsistencies must be resolved.

III. OIL FIELD AND PRODUCTION DATA

Estimated crude oil and associated gas production rate data for the Purneftegas region were provided by the reservoir specialist of Purneftegas. Table 1 (in Section IX of this report) shows the yearly production rate of oil and gas from 41 crude fields which are expected to be on stream before year 2000. Figure 1 (in Section X) of this report illustrates the geographic distribution of crude oil fields in the Pur region. Yearly projections of crude oil production and associated gas rates are listed below:

YEAR	OIL (MTA)	ASSOCIATED GAS (BCM/A)
1993	9.442	3.766
1994	9.696	4.301
1995	1.158	6.558
1996	12.492	8.136
1997	14.294	10.248
1998	14.551	10.513
1999	15.072	9.858
2000	15.790	9.987

The above data indicates that gas flow will increase with the crude oil production. Since the current compression capacity is only 2.1 BCM/A (at the Gupkinski plant), 1.7 BCM/A is estimated to be flared in 1993. In order to meet the oil production projections, additional gas plant capacity should be constructed to process the associated gas. According to the production schedule, a total of 8.5 BCM/A of gas processing capacity will be required, to accommodate associated gas production distributed roughly as follows:

Purneftegas SUBREGION	PROJECTED GAS PRODUCTION (BCM/A)
Western Pur	4
Terasovski Area	2
Kharampur Area	2.5

Purneftegas provided gas composition data by producing zone for a few crude fields. The production rate from each zone is unknown. Table 2 presents the average composition calculated

1494

from each field, assuming that production from all zones is equally weighted. In reality, production from all zones will not be equal. To determine a meaningful composition as a basis for designing pipelines and gas processing plants, the gas composition from the separators is required. The gas composition given is believed to be the current data. Compositional variations with time are unknown.

NGL production from various fields in the Pur region is estimated by assuming that all components heavier than propane are recovered. The production rate of oil, gas and NGL are listed in Table 3 by years up to 1998. The average gas composition of each field was used to calculate the NGL production rates. The calculated NGL rates are much lower than reported in the past, because the average gas composition is lean. Resolution of this inconsistency is necessary to form a solid basis for the associated gas utilization study.

IV. PUMP STATIONS (GOSPS)

No flow diagrams describing oilfield separation and pump station facilities were provided. According to SNGP, gas/oil separation at GOSPs is accomplished in the following manner:

> The oil is stabilized by successive flashes at three different pressure levels. The high pressure (HP) separator is located close to the wellhead and is operated at a pressure of 6-8 kg/cm^2. The wet gas is transported through a pipeline. Oil from the HP separator flows to the medium pressure (MP) separator, which operates at a pressure of 3-4 kg/cm^2. The separated oil is flashed again in the low pressure (LP) separator, operating at 0.5 kg/cm^2. The MP and LP separators are typically located at a crude oil pump station. The gas flashed from the MP and LP separators is compressed and injected into the HP gas pipeline originating at the HP separator. Pump stations are strategically located so that the flow lines from several wellheads can conveniently tie into the station. Figure 1 indicates the location of pump stations in the Purneftegas region.

No information regarding production facilities upstream of the separators was obtained. Flow diagrams, including the material balance for each pump station, would be useful, as would flow projections for each production pad and/or well and the distance from each production pad or well to the separators.

No pump stations were visited, but several were viewed from the air. Two rows of separators, at different elevations, and crude oil storage tanks are identifiable from the air. The MP separators are near ground level; the LP separators are elevated above the MP separator.

According to Figure 1, there are six pump stations west of Gupkinski, one near Gupkinski, three in the Terasovski field, and three in the Kharampur field.

V. GAS PLANTS

A. EXISTING FACILITIES

The gas processing plants at Gupkinski and Nizhnevartok were visited and meetings were held with representatives of Purneftegas and SNGP.

1495

The facilities are described in the following paragraphs:

1. Gupkinski Gas Plant

The Gupkinski gas plant currently consists of two identical compression trains, with 1 BCM/A of associated gas for each train. Gas processing equipment is partially installed in both trains. The plant is currently incapable of removing NGLs from the gas. Dehydrated gas, rich with propane and butane, is compressed for injection into Gazprom's trunk line 22 kilometers away. A total of 2 BCM/A is currently fed to the plant: 1 BCM/A from Western Pur and 1 BCM/A from Terasovski field.

Domestically manufactured turbo-expanders were purchased but have not been installed. The efficiency and reliability of the machines are questionable. The refrigeration compressors, of Czechoslovakian manufacture, are installed but are not operational.

The electric motor-driven gas compressors are of Russian manufacture. The wet feed gas is first compressed to 37 atmospheres by two-stage inlet gas compressors, and then dried in molecular sieve beds of Russian manufacture. The dry gas is compressed to the 76 kg/cm^2 pipeline pressure by residue gas compressors. The liquids removed after interstage cooling are incinerated. Each train is equipped with three sets of inlet compressors, with two operating and one standby. Each set has two compressors driven in tandem by one motor. Each train has two residue gas compressors with one operating and one spare. The frequency of compressor repair is high (twice a year). The molecular sieve beds are replaced every two years. In comparison, the bed life in a typical Western operation is more than three years.

Each piece of equipment is individually mounted with generous equipment spacing. The configuration results in a plot plan three times as large as a comparable Western plant with an unusually high pipe rack and a sizable investment in foundations and structural steel.

For liquids to be recovered in Trains 1 and 2, the turbo-expanders, associated vessels and piping must be installed. Considerable electrical work is needed. The Process Control System must be installed. and the entire system must be tested and commissioned. The plant could be in operation in less than one year. Each of the two trains is designed to nominally produce 1 MT/A of NGL depending on the gas composition.

The foundations for Trains 3 and 4 are installed, but no equipment has been procured. Depending on the resolution of issues regarding the geographic distribution of gas processing capacity in the Pur region, Trains 3 and 4 may be developed as 1 BCM/A or 2 BCM/A each.

2. Terasovski Gas Plant

The Terasovski plant was observed from the air. Currently, it consists only of pile foundations. No equipment is installed. Additional construction is not in progress as the need for gas processing at Tarasovski is in question.

3. Nizhnevartok Gas Plant

The Nizhnevartok gas plant consists of four gas processing trains, each with an associated gas capacity of 2 BCM/A. The first three trains were constructed by Russian institutes in

1496

1975, 1977 and 1978. The fourth train, designed by Fluor and built by the Japanese in 1980, reportedly has a lower energy efficiency than the first three trains.

The current load of 4 BCM/A is only half of the plant's design capacity. The fourth, less efficient train is currently shut down for maintenance. Current NGL production is 750,000 metric tons per year.

As at Gupkinski, the plant occupies a huge area, with all equipment individually mounted. All of the compressors in a given train are housed in a large compressor house.

The Ninzhevartok plant reportedly has a unit which converts condensate to higher quality motor fuel.

B. ALTERNATIVES

Changing production projections requires a reevaluation of the planned geographical distribution of gas processing capacity in the Pur region. Originally, it was anticipated that Gupkinski would process 6 BCM/A. Current projections indicate that Western Pur will produce only 4 BCM of gas per year. Either 2 BCM/A of Gupkinski's planned capacity can be used to process gas from Terasovski and/or Kharampur, or Gupkinski's planned capacity can be reduced by 2 BCM/A.

The Terasovski gas processing plant was initially planned to consist of two trains with a capacity of 2 BCM/A each. The original rationale was to process 2 BCM/A from the Terasovski area and 2 BCM/A from the Kharampur area. It may be justified to process Terasovski gas at Gupkinski, and/or to process Kharampur gas at Kharampur.

Development of a gas processing plant at Kharampur may be justified by the condensation problems associated with pipelining the wet Kharampur gas over 180 kilometers to Gupkinski. On the other hand, a Kharampur gas plant would require a dry gas pipeline and an NGL pipeline through the same corridor.

Several alternatives can be considered:

1. <u>Gas Processing at Gupkinski and Terasovski</u>

Complete the 4 BCM/A gas plant at Gupkinski to handle the associate wet gas from the Western Pur region.

Build a 4 BCM/A gas plant at Terasovski to handle the middle Pur region and Kharampur crude field.

Build a small condensate stabilizer plant at Kharampur so that the stabilized condensate can be injected into the crude line. It can also relieve the condensation in the associated gas line.

The following pipelines are associates with alternative 1:

- 120 km associated gas pipeline from Kharampur to Terasovski.
- Dry gas line from Terasovski to Gazprom pipeline.
- NGL line from Terasovski to Gupkinski and points beyond.

1497

2. Gas Processing at Gupkinski Only

Expand the Gupkinski plant to 8 BCM/A to treat all of the associated wet gas from Western Pur, the Terasovski area, and the Kharampur area.

Build a small condensate stabilizer plant at Kharampur as in alternative 1.

The following are associated with alternative 2:

- o 180 km associated gas line from Kharampur to Gupkinski via Terasovski.
- o NGL line from Gupkinski to points beyond.

3. Gas Processing at Gupkinski, Terasovski and Kharampur

Install gas processing capacity at three gas plants:

- o 4 BCM/A at Gupkinski to process gas from West Pur.
- o 2 BCM/A at Terasovski to process gas from middle Pur.
- o 2 BCM/A at Kharampur to process gas from the Kharampur area.

The following pipelines are associated with alternative 3:

- o 160 km dry gas line from Kharampur to the Gazprom pipeline via Terasovski.
- o NGL line from Kharampur to Terasovski, Gupkinski and points beyond.

4. Gas Processing at Gupkinski and Kharampur

Complete the 7 BCM/A gas plant at Gupkinski to handle the associated wet gas from the Western Pur region and from the Terasovski area.

Build a 2 BCM/A gas plant at Kharampur to process production from the Kharampur region.

The following pipelines are associated with alternative 4:

- o 120 km associated gas pipeline from Kharampur to Terasovski.
- o 40 km dry gas line from Terasovski to Gazprom pipeline.
- o NGL line from Terasovski to Gupkinski and points beyond.

C. PROCESS DESIGN

During Bechtel's visit to NIPI's office in Krasnodar, the proposed gas plant processing scheme was discussed. NIPI designed the process plant for Gupkinski and part of the Nizhnevartok plant. The proposed scheme is similar to the scheme used for the Nizhnevartok plant. Although the approach differs slightly from the Western approach for NGL recovery, the scheme is workable with reasonably good efficiency. A more detailed evaluation will be performed when feed gas compositions become available. The current design is based on a gas composition which is rich in NGL as compared to the composition given in Section III. The plant is designed to produce 0.47 MT/A of NGL with 1 BCM/A feed gas rate.

1498

VI. PIPELINES

A. NGL PIPELINE

The existing NGL pipeline is partially completed, over a distance of 867 kilometers, from Gupkinski to Ushny Balik. The terminus at Ushny Balik is equipped with a rail transfer facility capable of loading out 1.2 MTA of NGL, and a connection to a 426 millimeter pipeline for transport of up to 3 MTA to the Tobolsk refinery. The primary destinations for NGL transshipped by rail from Ushny Balik are Tataria and Gashkyria. Figure 2 illustrates the configuration of the NGL pipeline system.

The pipe is 530 mm O.D. X 6 mm W.T., with a yield strength of 40 kg/sq. mm. The maximum pump station discharge pressure capability of 64 atmospheres is within the pipeline's MAOP of 75 atmospheres, as reportedly defined by the Russian NGL pipeline code. (According to ASME Code for Pressure Piping B31.4, Liquid Transportation Systems for Hydrocarbons, Liquid Petroleum Gas, Anhydrous Ammonia, and Alcohols, the MAOP would be 65.2 atmospheres.)

The entire installed pipeline is coated with a Polyken Tapecoat System. Telecommunications and control systems are needed for the entire line for compliance with the proposed NGL pipeline code. Line pipe was manufactured in Japan, reportedly in accordance with API 5L. Several sources have indicated that 100 percent of the line's field welds have been radiographed. No records were examined to verify this claim. Portions of the line are not hydrotested, although the proposed Russian code for NGL pipelines requires 100 percent hydrotesting. Block valves are generally spaced every 50 kilometers, except for some sections which contain no block valves. The proposed code requires a maximum valve spacing of 10 kilometers. No leak detection system is employed.

NGLs and dry gas are metered at the outlet of the gas plants. As indicated on the diagram, large portions of the line are installed, but are not operating. Ushgiprotuvod, the agency empowered to accept and certify NGL pipelines for operation, will not allow these portions of the line to be commissioned. The segments which are not operating are purged, dried and plugged. No cathodic protection is employed on the idle sections. Operating sections have been granted a temporary variance from compliance with the proposed NGL Pipeline Code.

After the snow melts in the summer of 1993, NIPI will be investigating the condition of the existing NGL pipeline. NIPI's work plan includes cutting out sections of the line to inspect for corrosion, cleaning and hydrotesting. Smart pig runs are not in the scope of NIPI's planned activities. Replacement of slide gate valves may be required before any smart pig runs may be performed.

Pump stations currently operate at Noyabrsk for delivery of NGL to the Gazprom condensate line, and at Belozerny for delivery to South Balik. Pump stations are designed for attended operation, with pneumatic controls. The Noyabrsk pump station was planned as an intermediate pump station; however, it currently acts as the originating pump station for NGL movements to the Gazprom condensate line.

Reported operating pressures, in kilograms per square centimeter, are 29 at Belozerny, 20-22 at Nizhnevartok, and 10-12 at Ushny Balik. The observed discharge pressure at the Nizhnevartok gas plant was 32 kilograms per square centimeter. The higher observed operating pressure may be due to the current system configuration, which includes over 200 kilometers of reduced diameter (377 millimeters) from Lokosovsky Junction to Ushny Balik, and additional length due to the temporary utilization of pipelines from other services between Nizhnevartok and Lokosovsky Junction.

NGL pipelines in Russia are typically designed to operate with a minimum pressure 5 atmospheres higher than the vapor pressure of the NGL. The typical temperature range at burial depth is -12 to 15 degrees Celsius. The nominal temperature at burial depth is -5 degrees Celsius.

Reportedly, the proposed Russian code for NGL pipelines contains provisions which are onerous by Western standards, including a diameter limitation of 426 millimeters, a minimum distance of 3 kilometers from developed land use, and the requirement for an all-weather road parallelling the pipeline. If required, these provisions will substantially impact the cost of the NGL pipeline(s). On the other hand, the proposed code does not address maintenance or operating requirements, as does the ASME Code for Pressure Piping B31.4 (Liquid Transportation Systems for Hydrocarbons, Liquid Petroleum Gas, Anhydrous Ammonia, and Alcohols). Bechtel recommends that, as the basis for pipeline cost estimates, pipeline design, construction, operation and maintenance be in accordance with ASME B31.4 with the following supplementary conditions:

- Pressure design of the pipeline will be in accordance with the more stringent requirements of ASME Code for Pressure Piping B31.8, Gas Transmission and Distribution Piping Systems. Specifically, ASME B31.8 requires more conservative design factors at higher densities of land development within a specified distance of the pipeline.

- Mainline block valves with helipads will be installed with a maximum spacing of 10 kilometers.

- The pipeline will intersect roads at strategic locations.

The operational and physical status of the existing pipeline system varies with location, as color-coded on the diagram and as detailed below. All throughput projections in the following discussion were provided by NIPI.

1. <u>Gupkinski (kp 0) to Noyabrsk (kp 135)</u>

   This initial segment of the NGL pipeline has been laid, but not commissioned. No mainline block valves, control systems or originating pump station have been installed. Four mainline block valves are planned for this segment. Leads for cathodic protection have been installed, but the high voltage power line for cathodic protection is only partially complete. Before rectifiers can be installed and the cathodic protection system activated, 60 kilometers of power line need to be installed. The installed pipeline has not been accepted by Ushgiprotuvod.

   Currently, the Gupkinski gas processing plant is incomplete, and no NGLs are produced there. It is reported that knockout drums remove 380,000 metric tons of condensate per year, which is flared. It is envisioned that the pipeline from Gupkinski will transport NGLs

1500

produced at proposed gas processing facilities at and Gupkinski. The projected quantities are as follows:

YEAR	MTA	
	TERASOVSKI	GUPKINSKI
1995	1.398	1.181
2000	2.492	2.150
2010	2.415	2.740

There is considerable debate regarding the appropriate geographic distribution of gas processing capacity in the oil fields upstream of Gupkinski. Resolution of these issues will affect the need for construction of new NGL and/or lean gas pipeline(s) upstream of Gupkinski.

The segment of the existing NGL pipeline from kilopost (kp) 0 through kp 17 goes through the site of a proposed airport, which is planned to serve the city of Gupkinski. A proposed bypass around the airport site, required by the proposed code, is 40 kilometers long. No progress has been or is being made on this bypass. Finance, design, material procurement, and construction are needed to execute the proposed bypass.

The segment from kp 38 to 53 is also earmarked for replacement with a 14.7 kilometer bypass, due to the proximity of the installed line to the Barsukov central gathering unit. Curiously, the proposed bypass is shorter than the original alignment. Pipe for this bypass has been procured. Financing, procurement of gate valves, and construction are needed to execute the proposed bypass.

From kp 53 to kp 135 the pipe is in place, but no auxiliary construction (block valves, cathodic protection, electric power lines, control and communications systems, etc.) has been performed.

Six sections of pipe have floated out of the ditch and are exposed. The sections are summarized as follows:

KILOPOST	LENGTH (meters)	NOTES (by Contractor)
65	40	
66	400	
71	250	26 pair of set-on weights needed
84	250	26 pair of set-on weights needed
109	400	
123	40	

1601

Each set-on weight weighs 1.66 metric tons.

2. Noyabrsk (kp135) to Gazprom Condensate Line (kp195)

In 1991, 360,000 metric tons per year of NGLs were transported from a gas plant at Noyabrsk to the Gazprom condensate line in the existing 530 millimeter NGL pipeline. NIPI's projected throughputs for the Noyabrsk gas processing plant are:

YEAR	MTA
1993	0.335
1995	0.563
2000	0.539
2010	0.472

Of the 195 kilometers from Gupkinski to the Gazprom line, 50 kilometers utilize set-on weights to provide negative buoyancy with top-of-concrete set 0.8 meter below the ground surface. Set-on weights are made from concrete with iron aggregate or from sacks of polymeric material with sand filling. No continuous concrete coating is employed. Cast iron rings provide negative buoyancy at river crossings.

Two slide gate block valves are located in this section. Because these valves will not permit the passage of scrapers, the line is not pigged. The use of polyacrylamide gel pigs is being considered.

3. Gazprom (kp 195) to Belozerny (kp 543)

The NGL pipeline from the Gazprom connection to Belozerny is built and buried. It has not been accepted by the commission responsible for certifying NGL pipelines, and does not operate. The proposed Russian NGL Pipeline Code will require the addition of two bypasses around developed areas: one will replace 43 kilometers of line centered at kp 231.5; the other will replace 64 kilometers centered at kp 421.

Since the NGLs transferred to Gazprom are commingled with condensate in Gazprom's pipeline, the price which Gazprom pays for the NGL is a condensate price, which is considerably less than the true value of the NGLs. A strong incentive exists to make the NGL pipeline downstream of the Gazprom connection operational, so that NGL from Noyabrsk and points upstream can be delivered to markets in Ushny Balik and points beyond.

It is further envisioned that NGLs will be produced from a new gas processing plant at Varyegan, located at kp 430. According to data received from NIPI, the projected NGL output of the Varyegan plant is as follows:

YEAR	MTA
1995	0.887
2000	0.912
2010	0.728

1602

If the projected NGL output of the Varyegan plant is to be brought to market, then the NGL pipeline in this corridor must be operational by 1995.

4. Belozerny (kp 543) to Nizhnevartok (kp 609)

The pipeline segment from Belozerny to Nizhnevartok is the first leg of the system which currently transports NGL from the Belozerny gas plant to Ushny Balik. In 1991, this leg transported 1.242 million metric tons of NGL. Projected NGL outputs from the Belozerny plant are:

YEAR	MTA
1993	1.0
1995	1.156
2000	1.134
2010	1.163

These outputs will be combined with flow from the upstream NGL plants, for transport downstream of Belozerny.

The proposed Russian code for NGL pipelines will require the rerouting of this entire pipeline segment to maintain a 3-kilometer distance from developed areas.

5. Nizhnevartok (kp 609) to Ushny Balik (kp 867)

Except for several sections totalling 27 kilometers, the NGL pipeline from Nizhnevartok to Ushny Balik has been installed. It is not in operation, apparently due to a lack of line integrity and/or pipeline quality assurance. Instead, an assemblage of pre-existing pipelines, some expropriated from other services, is temporarily linked to transport NGLs through this corridor. The assemblage includes a crude oil line between Nizhnevartok and the Ermakovskoje oil field at Arehov, 95 kilometers of gas line between Arehov and a tie-in to an old 377 millimeter NGL pipeline from Lokosovsky to Ushny Balik, and the 377-millimeter NGL pipeline.

Industry officials have expressed the opinion that the entire 530-millimeter NGL pipeline in this corridor needs replacement. A bypass of unknown length is needed in the vicinity of Nizhnevartok for compliance with the proposed NGL Pipeline Code. Replacement of the NGL line will enable the temporary assemblage of pipelines to be returned to their original intended services. The existing 377-millimeter NGL pipeline from Lokosovsky to Ushny Balik will parallel the new 530-millimeter pipeline in this corridor. NGL output from the Lokosovsky gas plant will be transported in the existing line, while NGL from upstream gas plants will be transported in the new line.

1503

NGL flows from the plants in this corridor are as follows:

YEAR	MTA	
	NIZHNEVARTOK	LOKOSOVSKY
1991	1.846	0.587
1993	1.2	0.4
1995	1.156	0.524
2000	1.134	0.476
2010	1.163	0.395

B. LEAN GAS PIPELINES

In order to utilize gas associated with oil production, a lean gas pipeline is needed to deliver the output of each gas plant to market. Generally, the "market" consists of a pipeline in the Gazprom system. Gazprom is the sole entity empowered to export gas from Russia.

Currently, a 22-kilometer, 530 millimeter gas pipeline connects the Gupkinski gas plant with Gazprom's gas trunk line. Although intended for lean gas service, this pipeline currently carries dehydrated gas rich with propane and butane, because the Gupkinski gas processing plant is only capable of dehydration and compression. Information regarding the lean gas pipelines associated with other existing gas plants is forthcoming from Nipigazperabotka.

If gas plant(s) are built at Terasovski and/or Kharampur, then lean gas pipeline(s) will be required to transport the output of these plants to the Gazprom system.

C. WET GAS PIPELINES

The gas plants are supplied with wet gas from the production separators by wet gas pipelines owned by SNGP. As new associated gas supplies are developed, additional wet gas pipelines will be needed.

The wet gas pipeline from Terasovski to Gupkinski is designed for a field separator pressure of 6 atmospheres at Terasovski, and a delivery pressure of 2 atmospheres at Gupkinski. Wet gas is metered at the field separators and at the inlet of the Gupkinski gas plant.

Particular attention must be given to the possible need for a wet gas pipeline connecting Kharampur with gas processing plant(s) at Gupkinski and/or Terasovski. The distances involved are substantial, and the line would operate in two-phase flow. Construction of a gas processing plant at Kharampur would eliminate the need for a wet gas pipeline in this corridor, but would instead require a dry gas pipeline to Gazprom (near Gupkinski) and an NGL pipeline to Gupkinski.

The current design for the wet gas pipeline from Kharampur to Gupkinski involves the transport of 2.8 BCM/A from Gupkinski to Terasovski, and a lesser throughput from Terasovski to Gupkinski. The planned Kharampur compressor station is envisioned to operate at a suction pressure of 4 atmospheres and a discharge pressure of 75 atmospheres. The flow rate is defined at normal conditions of 1 atmosphere (760 mm. Hg)

and 0 degrees Celsius. Nipigazperabotka's envisioned diameters are 720 millimeters from Kharampur to Terasovski, and 530 millimeters from Terasovski to Gupkinski.

VII. NGL/LPG LOADING FACILITIES

Currently, wide fraction NGL is loaded onto rail cars at Ushny Balik principally for transport to Tataria and Bashkyria. Approximately ten percent of the NGL is exported to Finland; some is shipped to Perm for domestic consumption. The Ushny Balik rail loading facility is capable of loading 1,200,000 metric tons per year. Each rail car carries either 60 or 120 cubic meters of liquid.

A rail loading terminal, with a capacity in the range of 500,000 to 700,000 metric tons per year, is being constructed at Noyabrsk by a joint stock company, whose stockholders include the railroad serving the area. SNGP is not a participant in the joint stock company.

A number of questions regarding the Noyabrsk Rail Terminal require clarification:

- What hydrocarbon materials are planned to be shipped from Noyabrsk? NGL? Fractionated LPGs? Refined products?
- What is the source of these materials? Gas Plants? Refineries? Oilfield separators?
- Where will these materials be stored to absorb temporal imbalances between inflows and outflows? Noyabrsk? Gupkinski? Above ground? Below ground?
- What is the capacity of the existing rail line, and what is its current and projected level of utilization?

VIII. ECONOMICS

The economic viability of any gas recovery and utilization project is dependent on the project's ability to generate hard currency for debt retirement. Recovery and/or production of crude oil, natural gas, condensate, wide-fraction NGL, and individual LPG components will be enabled by the expenditures targeted for the recovery and utilization of associated gas. Export of a portion of any or all of these commodities must be an integral part of the marketing plan.

SNGP, in quest of hard currency earnings, seeks to export up to 60 percent of its gas and NGL production. Gas exports would be via Gazprom pipeline; NGL exports would be by rail through Ushny Balik. Possible NGL export scenarios include:

- Rail to Finland.
- Rail to Azov Sea, with transfer to gas carriers.
- Rail to the border with Ukraine, Poland, and/or the Baltic countries. Hungary could be supplied via Ukraine.
- Rail connection to the Trans-Siberian Railroad or Baikal-Amur Railroad; from there, NGL could be shipped:
    - East to Eastern Asia
    - South to India and China
    - East to Pacific port(s), for transfer to gas carriers supplying Japan, Canada and/or the United States

1506

- Rail to Novorisisk on the Black Sea, with transfer to gas carriers. (Not a likely scenario.)

To restore profitability, SNGP requires regulatory relief. It currently is allowed to export only limited quantities of gas for hard currency. In the absence of competition, Gazprom charges punitive tariffs for the transport of gas for SNGP.

Costs, in rubles, are characterized by hyperinflation. From January, 1993 to May, 1993, prices have increased by the following multipliers:

COST CATEGORY	MULTIPLIER, 1/93 - 5/93
LPGs	84 X
Electricity	184 X
Rail Tariffs	300 X
Construction Materials	400 X

Due to the instability of the ruble, prices used for materials, labor, and revenue streams in the economic analysis must be based on world prices. LPGs, marketed domestically, command 9,000 to 10,000 rubles per metric ton in May, 1993.

Pipeline construction costs should be based on a work schedule in which work is performed from November through March, when the ground is capable of supporting heavy equipment. An estimate on this basis may be conservative, as activities into June may be possible in some years.

Typical Russian pipeline projects, constructed according to Russian norms, have the following cost structure:

- Material 40%
- Construction 40%
- Infrastructure 15%
- Controls 5%

An interim measure worth evaluating is the reinjection of NGL into the reservoir until the NGL pipeline is completed. A reservoir study would be required to determine which zone can be used for injection of NGL. This approach would accelerate crude oil development by circumventing the schedule constraints imposed by the need for completion of the entire NGL pipeline to Ushny Balik.

1506

IX. TABLES

TABLE 1 CRUDE OIL AND ASSOCIATED GAS PRODUCTION
TABLE 2 CRUDE FIELD GAS COMPOSITION
TABLE 3 CRUDE OIL, ASSOCIATED GAS, AND NGL RATE

1507

Table 3. Crude Oil, Associated Gas and NGL Rate

	FIELD PRODUCTION RATE 1998				
FIELD NO.	OIL RATE MT/Y	GAS RATE BCM/Y	NGL/GAS MT/BCM	NGL MT/Y	NOTE:
1	0.4163	0.0941	0.095	0.0089	
2	1.239	0.054	0.026	0.0014	
3	0.0926	0.007	0.026	0.0002	ASSUME THE SAME GAS COMPOSITION AS 2
4	2.54	3.68	0.174	0.6403	
5	2.2495	1.5432	0.272	0.4198	ASSUME THE RICH GAS COMPOSITION
6	1.4812	1.1272	0.142	0.1601	
7	0.0916	0.0103	0.142	0.0015	ASSUME THE SAME GAS COMPOSITION AS 6
8	0.0104	0.0021	0.026	0.0001	ASSUME SAME AS 3
9	0.2737	0.162	0.274	0.0444	ASSUME RICH GAS COMPOSITION
10	0.1447	0.0162	0.272	0.0044	ASSUME SAME AS 5
11	0.2772	0.1369	0.272	0.0372	ASSUME SAME AS 5
12	1.7591	1.4337	0.142	0.2036	ASSUME SAME AS 6
13	0.2736	0.0328	0.237	0.0078	
14	0.2001	0.0856	0.142	0.0122	ASSUME SAME AS 6
15	0.6455	0.0491	0.274	0.0135	ASSUME SAME AS 9
16	0.3009	0.0587	0.142	0.0083	ASSUME SAME AS 6
17	0.0482	0.0407	0.142	0.0058	ASSUME SAME AS 6
18	0.0743	0.0627	0.142	0.0089	ASSUME SAME AS 6
19	0.0189	0.0126	0.142	0.0018	ASSUME SAME AS 6
20	0.0628	0.0139	0.142	0.0020	ASSUME SAME AS 6
	0.0027	0.0018	0.142	0.0003	ASSUME SAME AS 6
23	0.0054	0.0036	0.142	0.0005	ASSUME SAME AS 6
24	0.0533	0.0107	0.274	0.0029	ASSUME SAME AS 9
26	0.025	0.006	0.142	0.0009	ASSUME SAME AS 6
27	0.052	0.0124	0.142	0.0018	ASSUME SAME AS 6
28	0.0049	0.0011	0.142	0.0002	ASSUME SAME AS 6
29	0.002	0.004	0.272	0.0011	ASSUME SAME AS 5
30	0.0036	0.0017	0.272	0.0005	ASSUME SAME AS 5
31	0.016	0.0168	0.272	0.0046	ASSUME SAME AS 5
33	0.0067	0.0011	0.272	0.0003	ASSUME SAME AS 5
37	0.0135	0.0061	0.272	0.0017	ASSUME SAME AS 5
40	0.0307	0.0034	0.272	0.0009	ASSUME SAME AS 5
41	2.118	1.809	0.272	0.4920	ASSUME SAME AS 5
TOTAL	14.5334	10.5005		2.0895	

1508

TABLE 1. CRUDE OIL AND ASSOCIATED GAS PRODUCTION (CONTINUED)

МЕСТОРОЖДЕНИЕ	1999 Добыча нефти т.т.	1999 Г.Ф. м3/т	1999 Добыча газа млн.м3	2000 Добыча нефти т.т.	2000 Г.Ф м3/т	2000 Добыча газа млн.м3	Давление на 1-ой ступени сепарац. атм ~ atm
1.Ново-Нурлейское	343.7	231.0	80.4	292.2	248.0	72.5	3.1
2.Барсуковское	1027.4	54.0	55.5	866.5	54.0	46.8	4
3.Верхне-Нурлейское	19.7	76.0	6.1	69.4	76.0	5.3	4.2
4.Юксоновское	2920.6	1246.0	3640.0	3149.2	1127.0	3550.0	3.0
5.Тарасовское	1979.6	729.0	1443.1	1764.3	753.0	1328.5	5.2
6.Харампурское	1259.9	711.0	895.0	1072.0	611.0	655.0	
7.Усть-Харампурское	86.6	112.0	9.7	79.2	112.0	8.9	
8.Западно-Нурлейское	8.4	200.0	1.7	6.3	200.0	1.3	4.6
9.Губинское	257.1	665.0	171.0	245.5	726.0	178.2	
10.Северо-Тарасовское	119.5	112.0	13.4	99.1	112.0	11.1	5.2
11.Восточно-Тарасовское	380.0	501.0	190.4	483.7	501.0	245.3	
12.Ямо-Харампурское	1087.5	761.0	1436.4	1093.3	711.0	1346.1	
13.Нерутовское	362.0	120.0	43.4	379.2	120.0	45.5	
14.Бестымянное	239.5	390.0	93.4	267.6	405.0	108.3	
15.Северо-Юксоновское	750.2	76.0	57.6	838.5	76.0	63.7	
16.Южное	556.0	200.0	115.6	866.0	219.0	189.6	
17.Средне-Харампурское	57.2	900.0	51.5	52.7	900.0	47.4	
18.Южно-Харампурское	66.5	900.0	59.8	50.4	900.0	45.4	
19.Усть-Часельское	93.8	622.0	57.8	193.0	622.0	120.0	
20.Ванкинское	143.1	222.0	31.8	222.3	222.0	49.3	
21.Чатыльинское	15.3	300.0	4.5	86.2	400.0	34.5	
22.Верхне-Часовское	14.9	622.0	9.3	33.7	622.0	21.0	
23.Ново-Часельское	40.7	622.0	25.3	72.4	622.0	45.0	
24.Изъеганское	42.0	200.0	8.4	33.3	200.0	6.7	
25.Ямо-Танловское	2.7	76.0	.2	15.9	76.0	1.2	
26.Западно-Харампурское	30.0	242.0	7.3	29.0	242.0	7.0	
27.Ямо-Тарасовское	75.0	240.0	18.0	120.0	240.0	28.8	
28.Танское	47.9	222.0	10.6	90.8	222.0	20.2	
29.Западно-Тарасовское	23.7	200.0	4.7	26.5	200.0	5.4	
30.Фиктивское	34.1	467.0	15.9	68.5	472.0	32.3	
31.Ямо-Пюрейское	61.8	276.0	16.8	100.0	276.0	27.6	
32.Ванчейское				9.1	163.0	1.7	
33.Северо-Вонтурское	12.0	172.0	2.0	12.1	172.0	2.1	
34.Карасевское				2.2	111.0	.2	
35.Черничное				4.1	150.0	.2	
36.Добровольское				3.6	463.0	1.7	
37.Лонгинское	76.1	450.0	34.2	171.4	450.0	77.1	
38.Ярское				2.7	300.0	.6	
39.Ахайгинское				1.4	3000.0	4.2	
40.Северо-Абисседонтровское	26.2	112.0	2.9	20.3	112.0	2.3	
41.Северо-Губинское	1925.9	656.0	1263.0	1646.6	651.0	1072.0	
Красноленское							
C1	15052.8		9257.5	15415.5		9235.1	
C2	19.4		5.8	371.5		103.4	
C1+C2	15072.2		9263.3	15790.5		9338.5	

gas

current pressure

will buildup to 6-8 atm after no flaring

Table 2 . Crude Field Gas Composition

Number	FIELD	ZONE	C02	N2	He	Ar	H2	CH4	C2H6	C3H8	i-C4H10	n-C4H10	i-C5H12	n-C5H12	i-C6H14	n-C6H14	SUM	COND. MT/BCM
	Ust-Kharampurski	BP10	0.125	4.327	0.07	0.073	0.481	88.603	3.243	2.147	0.404	0.328	0.059	0.036			99.896	
		BP11	0.415	6.592	0.0558	0.0697	1.0502	81.8374	4.6268	3.7318	0.628	0.7816	0.1402	0.1295	0.036	0.023	100.117	
		BP12	0.293	3.125	0.035	0.024	0.075	90.97	2.904	1.807	0.376	0.454	0.122	0.082			100.267	
		BP14	0.676	4.516	0.018	0.096	0.197	80.922	6.27	5.258	0.697	1.328	0.223	0.193	0.046	0.018	100.458	
			0.37725	4.84	0.0447	0.065675	0.4508	85.5831	4.26095	3.23595	0.52625	0.7229	0.13605	0.110125	0.0205	0.01025	100.1845	
		N. AVE	0.377	4.631	0.045	0.066	0.450	85.425	4.253	3.230	0.525	0.722	0.136	0.110	0.020	0.010	100.000	0.069
5	Tarasovski	BP4	0.4	0.77	0.01	0.01	0.23	75.85	10.37	8.32	1.32	1.88	0.45	0.35	0.06	0.02	100.04	
		BP8	0.37	1.72	0.01	0.01	0.3	84.24	6.5	4.47	0.85	1.06	0.24	0.19	0.03	0.01	100	
		BP9	0.26	2.57	0.01	0.01	0.01	80.54	7.15	6.02	1	1.73	0.32	0.27	0.06	0.04	99.99	
		BP10-11	0.24	1.96	0.02	0.01	0.05	84.5	7.11	3.97	0.58	1.03	0.24	0.23	0.04	0.02	100	
		BP14	0.14	1.83	0.01	0.01	0.01	78.67	8.74	7.16	0.9	1.84	0.36	0.35	0.06	0.02	100	
			0.282	1.77	0.012	0.01	0.12	80.74	7.974	5.988	0.93	1.508	0.322	0.278	0.05	0.022	100.006	
		N.AVE	0.282	1.770	0.012	0.010	0.120	80.735	7.974	5.988	0.930	1.506	0.322	0.278	0.050	0.022	100.000	0.132
2	Barsukovski	PK19	0.549	1.302	0.08	0.0255	0.007	96.316	1.577	0.0282	0.101	0.1276	0.121	0.0535	0.08	0.015	100.3797	
		PK20	0.297	8.222		0.109	0.009	87.772	2.827	0.927	0.396	0.058	0.087				100.704	
		DS10	0.232	2.245	0.015	0.025	0.137	96.27	0.86	0.073	0.094	0.057	0.033				100.041	
		BS8	0.768	2.953		0.033		91.486	3.481	0.187	0.684	0.072	0.285	0.021	0.053		100.023	
		BS10	0.685	3.3466	0.051	0.046	0.162	93.5893	1.48	0.303	0.146	0.337	0.134	0.046			100.3259	
		BS10-2	0.678	2.044	0.011	0.032		93.116	3.016	0.491	0.36	0.152	0.073	0.025			99.998	
		BS11	0.34	3.252	0.018	0.02	0.045	93.82	1.132	0.434	0.282	0.342	0.07	0.06			99.815	
		BS12	0.402	2	0.01	0.022	0.13	87.592	3.29	3.04	1.517	1.147	0.476	0.248	0.065	0.038	99.997	
		BS14	0.118	1.12	0.003	0.006	0.011	90.28	5.32	2.081	0.431	0.439	0.12	0.071			100	
			0.454333	2.942733	0.026857	0.035389	0.071571	92.24892	2.553667	0.840244	0.445667	0.3035	0.153222	0.074929	0.072667	0.0265	100.2502	
		N.AVE	0.453	2.935	0.027	0.035	0.071	92.019	2.547	0.838	0.445	0.303	0.153	0.075	0.072	0.026	100.000	0.026
6	Kharampurski	T	0.08	1.703	0.015	0.018		97.804	0.234	0.116	0.016	0.012					99.998	
		PK1	0.017	2.056	0.018	0.02		97.818	0.063	0.007							99.999	
		PK3	0.419	1.645	0.013	0.024	0.003	97.534	0.165	0.108	0.014	0.052		0.023			100	
		PK11	0.096	0.644	0.003	0.018	0.055	98.778	0.305	0.06	0.012	0.029					100	
		PK12	0.128	1.214	0.007	0.022	0.893	97.3	0.278	0.104	0.015	0.037					99.998	
		PK13	0.351	0.711	0.005	0.014	0.262	97.544	0.692	0.203	0.038	0.12	0.022	0.038			100	
		PK15	0.19	0.91	0.006	0.021	0.031	98.071	0.575	0.081	0.034	0.044	0.022	0.015			100	
		PK16	0.482	1.109	0.009	0.007	0.002	98.057	0.183	0.079	0.014	0.043					99.985	
		PK17	0.136	1.325	0.009	0.015	0.004	98.248	0.191	0.038	0.01	0.023					99.999	
		PK20	0.812	1.957	0.011	0.028	0.041	96.668	0.403	0.019	0.029	0.016	0.017				100.001	
		PK21	0.602	0.644	0.012	0.003	0.111	98.197	0.318	0.068	0.02	0.024					99.999	
			0.301182	1.265273	0.009818	0.017273	0.200286	97.81991	0.309727	0.080273	0.0202	0.04	0.020333	0.025333			100.1096	
		N.AVE	0.301	1.264	0.010	0.017	0.200	97.713	0.309	0.080	0.020	0.040	0.020	0.025			100.000	0.003
6	Kharampurski	U1	0.327	1.701	0.012	0.007	0.052	80.105	8.53	6.003	0.978	1.484	0.392	0.293	0.079	0.038	100.001	
		U2	0.256	1.187	0.009	0.019	0.053	81.267	8.941	5.929	0.785	1.164	0.213	0.157	0.017		99.997	
		SEB	0.305	1.21	0.009	0.01		71.671	11.769	8.851	1.903	2.73	0.602	0.576	0.115	0.05	100.001	
		U3	0.155	1.196	0.011	0.01	0.04	76.94	11.023	7.683	1.056	1.356	0.275	0.2	0.042	0.016	100.002	
		SEB	0.451	1.213	0.012	0.005	0.005	82.191	8.989	5.177	0.754	0.883	0.199	0.127	0.014	0.009	100.029	
		U4	0.154	0.89	0.006	0.01	0.067	80.991	10.789	4.945	0.726	0.927	0.282	0.168	0.028	0.013	99.996	
		U2	0.417	1.251	0.009	0.01	0.407	75.301	12.853	7.201	0.927	1.319	0.188	0.118			100.001	
			0.295	1.235286	0.009714	0.010143	0.069143	78.35229	10.41343	6.541286	1.018429	1.409	0.335857	0.234143	0.049167	0.0252	100.0181	
		N.AVE	0.295	1.235	0.010	0.010	0.069	78.338	10.412	6.540	1.018	1.409	0.336	0.234	0.049	0.025	100.000	0.142

Table 2 . Crude Field Gas Composition

Number	FIELD	ZONE	C02	N2	He	Ar	H2	CH4	C2H6	C3H8	i-C4H10	n-C4H10	i-C5H12	n-C5H12	i-C6H14	n-C6H14	SUM	COND, MT/BCM
1	NOVO-PURPEISK	BS10-1	0.22	3.93	0.6	0.515	0.07	87.49	3.85	2.46	0.48	0.86	0.23	0.24	0.07	0.05	101.066	
		BS10-2	0.13	2.93	0.03	0.01	0.03	78.29	5.34	8.6	2.75	2.89	0.76	0.78	0.26	0.68	103.48	
		BS11	0.16	1.93				90.39	4.27	2.32	0.31	0.46	0.06	0.06			99.98	
		BS12	0.39	1.72	0.01	0.02	0.13	97.58		0.03					0.04	0.01	99.93	
			0.225	2.6275	0.213333	0.181667	0.076667	88.4375	4.486667	3.3525	1.18	1.403333	0.356667	0.36	0.123333	0.246667	103.2708	
		N.AVE	0.218	2.544	0.207	0.176	0.074	85.636	4.345	3.246	1.143	1.359	0.345	0.349	0.119	0.239	100.000	0.095
	YARO YAKHTSNSKI	BT6	0.11	0.59				83.91	7.49	2.96	0.58	0.81	3.94	(C5-6)			100.19	
		BT13	0.63	0.92				81.14	7.96	3.16	0.59	0.81	4.89	(C5-6)			99.9	
		BT10	0.89	0.4				82.24	8.37	3.24	0.48	0.63	4.26	(C5-6)			100.51	
		BT11	0.07	0.24				84.94	8.13	2.16	0.46	0.55	3.35	(C5-6)			99.9	
			0.425	0.5375				83.0575	7.9875	2.88	0.5275	0.6	4.11	(C5-6)			100.125	
		N.AVE	0.424469	0.536829				82.95381	7.977528	2.876404	0.526841	0.599251	4.104869	(C5-6)			100	
	Fesmisbami	U1	0.916	2.029	0.009	0.012	0.059	71.046	11.624	10.022	1.461	2.054	0.386	0.217	0.076	0.029	99.94	
		U2	0.396	2.145	0.0195	0.1	0.0246	77.98	8.41	7.396	1.093	1.393	0.298	0.228	0.1055	0.066	99.6546	
			0.656	2.087	0.01425	0.056	0.0418	74.513	10.017	8.709	1.277	1.7235	0.342	0.2225	0.09075	0.0475	99.7973	
		N.AVE	0.657332	2.091239	0.014279	0.056114	0.041885	74.68434	10.03735	8.728689	1.279594	1.727001	0.342695	0.222952	0.090934	0.047596	100	0.188122494
13	Meretoyakhtelski	BP6	0.4785	0.2504	0.02		0.0082	66.591	10.3197	11.0976	2.621	4.5235	1.7014	1.554	0.9113		100.0766	
		IIcl ,p=40	0.5414	0.2506	0.0025		0.008	85.6798	8.0643	4.167	0.7445	1.1061	0.4902	0.4818	0.4638		102	
		FISKRATH	0.3258	0.6036	0.006		0.0118	67.813	9.6339	19.6945	2.5998	4.0985	1.6873	1.5143	1.0025		106.991	
		BP3	0.05	1.7363	0.038			74.6009	13.6293	6.8619	0.9694	1.3124	0.3057	0.2382	0.2378		99.9799	
		BP4	2.47	0.9183	0.08		1.14	78.305	11.2573	4.3816	0.4629	0.5898	0.221	0.1204	0.1038		100.0501	
			0.77314	0.75184	0.0293	0	0.292	74.59704	10.5809	9.24052	1.47052	2.32608	0.88112	0.78174	0.54384		102.2779	
		N.AVE	0.756	0.735	0.029	0.000	0.285	72.937	10.345	9.035	1.447	2.274	0.861	0.764	0.532		100.000	0.237
4	KOMSOMOLSKI	BP1-2	0.08	1.19				81.25	3.45	1.9	0.49	1.17	10.47	(C5-C6)			100	
		BP1	0.28	1.03				89.67	3.73	1.82	0.47	0.52	2.47				99.99	
		BP2	0.33	0.9				88.68	4.05	2.06	0.65	0.75	2.58				100	
		BP3	0.646	1.064				90.502	3.294	1.483	0.484	0.561	1.955				99.989	
		BP8	0.552	1.389				87.386	3.866	2.475	0.6754	0.839	2.971				100.0534	
			0.3776	1.1146				87.4976	3.678	1.9476	0.53388	0.768	4.0692				100.0065	
		N.AVE	0.378	1.115				87.492	3.678	1.947	0.534	0.768	4.069				100.000	0.174
5	Tarasovski	B8	0.1	0.87				65.2	9.64	11.46	3.57	5.26	1.78	1.44	0.44	0.24	100	
			0.14	1.02				77.94	9.54	7.53	1.38	1.85	0.34	0.24	0.02		100	
		BP9	0.11	0.58				67.66	10.48	10.16	3.13	4.59	1.51	1.14	0.39	0.25	100	
			0.02	0.47				82.1	8.58	5.8	0.8	1.47	0.21	0.16	0.02		99.63	
		BP10-11	0.1	0.33				59.02	12.57	15.32	2.6	6.33	1.56	1.61	0.36	0.21	100.01	
			0.09	0.42				70.26	13.15	11.36	1.05	2.83	0.38	0.39	0.07		100	
		BP14	0.1	0.69				62.33	10.65	14.04	2.64	6	1.51	1.45	0.37	0.19	99.97	
			0.04	0.75				72.91	11.36	10.6	1.4	2.36	0.34	0.29	0.05		100.1	
			0.0875	0.64125				69.6775	10.74625	10.78375	2.07125	3.83625	0.95375	0.84	0.215	0.2225	100.075	
		N.AVE	0.087	0.641				69.625	10.738	10.778	2.070	3.833	0.953	0.839	0.215	0.222	100.000	0.272

Table 2 . Crude Field Gas Composition

Number	FIELD	ZONE	CO2	N2	He	Ar	H2	CH4	C2H6	C3H8	i-C4H10	n-C4H10	i-C5H12	n-C5H12	i-C6H14	n-C6H14	SUM	COND, MT/BCM
9	Gubkinski	BP3						90.6	3.58	0.97	0.56	0.35	3.06	(C5-C6)			99.14	
		BP2						82.05	5.5	3.9	0.91	0.98	5.59	(C5-C6)			98.93	
								86.325	4.54	2.435	0.735	0.665	4.335				99.035	
		N.AVE						87.166	4.584	2.459	0.742	0.671	4.377				100.000	0.179
7	SEB-Gubkinski	BP7						87.05	5.93	0.58	1.15	0.2	3.75				98.66	
		BP12						73.6	8.43	5.26	0.97	1.05	9.92				99.23	
			0.81	0.27				70.7	12.54	7.45	3.35	2.51	1.44	0.57	0.42		100.06	
			0.84	0.26				76.5	12.6	5.9	1.74	1.25	0.48	0.21	0.19		100.17	
			0.825	0.265				76.9625	9.925	4.7975	1.8025	1.2525	3.8975	0.39	0.305		100.4225	
		N.AVE	0.822	0.264				76.639	9.883	4.777	1.795	1.247	3.881	0.388	0.304		100.000	0.274
	Mol. Wt.									44.097	58.123	58.123	72.15	72.15	86.177	86.177		
	NOTE: CONDENSATE RATE IS CALCULATED BY ASUMING RECOVERY ALL THE C3 PLUS COMPONENTS																	

Table 3. Crude Oil , Associate Gas and NGL Rate

		FIELD PRODUCTION RATE 1993			
FIELD NO.	OIL RATE MT/Y	GAS RATE BCM/Y	NGL/GAS MT/BCM	NGL MT/Y	NOTE:
1	0.9777	0.1662	0.095	0.0158	
2	2.576	1.154	0.026	0.0300	
3	0.1708	0.0287	0.026	0.0007	ASSUME THE SAME GAS COMPOSITION AS 2
4	0.3491	0.5237	0.174	0.0911	
5	4.1195	1.4418	0.272	0.3922	ASSUME THE RICH GAS COMPOSITION
6	1.0166	0.4066	0.142	0.0577	
7	0.0318	0.0073	0.142	0.0010	ASSUME THE SAME GAS COMPOSITION AS 6
8	0.0369	0.0074	0.026	0.0002	ASSUME SAME AS 3
9	0.0007	0.0003	0.274	0.0001	ASSUME RICH GAS COMPOSITION
10	0.1062	0.0119	0.272	0.0032	ASSUME SAME AS 5
12	0.0378	0.0151	0.142	0.0021	ASSUME SAME AS 6
24	0.0036	0.0007	0.274	0.0002	ASSUME SAME AS 9
41	0.0152	0.0024	0.272	0.0007	ASSUME SAME AS 5
TOTAL	9.4419	3.7661		0.5951	

1513

Table 3. Crude Oil, Associated Gas and NGL Rate

		FIELD PRODUCTION RATE 1994			
FIELD NO.	OIL RATE MT/Y	GAS RATE BCM/Y	NGL/GAS MT/BCM	NGL MT/Y	NOTE:
1	0.8172	0.1675	0.095	0.0159	
2	2.3687	0.6703	0.026	0.0174	
3	0.1616	0.0271	0.026	0.0007	ASSUME THE SAME GAS COMPOSITION AS 2
4	0.458	0.5954	0.174	0.1036	
5	3.728	1.7596	0.272	0.4786	ASSUME THE RICH GAS COMPOSITION
6	1.4	0.84	0.142	0.1193	
7	0.04	0.0069	0.142	0.0010	ASSUME THE SAME GAS COMPOSITION AS 6
8	0.0274	0.0055	0.026	0.0001	ASSUME SAME AS 3
9	0.041	0.0179	0.274	0.0049	ASSUME RICH GAS COMPOSITION
10	0.1726	0.0193	0.272	0.0052	ASSUME SAME AS 5
12	0.3098	0.1239	0.142	0.0176	ASSUME SAME AS 6
15	0.0243	0.0018	0.274	0.0005	ASSUME SAME AS 9
24	0.0346	0.0069	0.274	0.0019	ASSUME SAME AS 9
40	0.0014	0.0002	0.272	0.0001	ASSUME SAME AS 5
41	0.1109	0.0579	0.272	0.0157	ASSUME SAME AS 5
TOTAL	9.6955	4.3002		0.7826	

1614

Table 3. Crude Oil , Associated Gas and NGL Rate

		FIELD PRODUCTION RATE 1995			
FIELD	OIL RATE	GAS RATE	NGL/GAS	NGL	NOTE:
NO.	MT/Y	BCM/Y	MT/BCM	MT/Y	
1	0.6925	0.1406	0.095	0.0134	
2	2.1365	0.5299	0.026	0.0138	
3	0.1529	0.0257	0.026	0.0007	ASSUME THE SAME GAS COMPOSITION AS 2
4	0.9554	1.242	0.174	0.2161	
5	3.3032	2.1207	0.272	0.5768	ASSUME THE RICH GAS COMPOSITION
6	1.6934	1.3547	0.142	0.1924	
7	0.0587	0.0079	0.142	0.0011	ASSUME THE SAME GAS COMPOSITION AS 6
8	0.0209	0.0042	0.026	0.0001	ASSUME SAME AS 3
9	0.1455	0.0707	0.274	0.0194	ASSUME RICH GAS COMPOSITION
10	0.2055	0.023	0.272	0.0063	ASSUME SAME AS 5
11	0.0198	0.0092	0.272	0.0025	ASSUME SAME AS 5
12	0.6863	0.4118	0.142	0.0585	ASSUME SAME AS 6
13	0.0101	0.0011	0.026	0.0000	ASSUME SAME AS 3
14	0.0097	0.0039	0.142	0.0006	ASSUME SAME AS 6
15	0.121	0.0092	0.274	0.0025	ASSUME SAME AS 9
24	0.0486	0.0097	0.274	0.0027	ASSUME SAME AS 9
29	0.0008	0.0002	0.272	0.0001	ASSUME SAME AS 5
40	0.0014	0.0016	0.272	0.0004	ASSUME SAME AS 5
41	0.882	0.5918	0.272	0.1610	ASSUME SAME AS 5
OTAL	11.1442	6.5579		1.2682	

1516

Table 3. Crude Oil, Associate Gas and NGL Rate

	FIELD PRODUCTION RATE 1996				
FIELD NO.	OIL RATE MT/Y	GAS RATE BCM/Y	NGL/GAS MT/BCM	NGL MT/Y	NOTE:
1	0.5895	0.1256	0.095	0.0119	
2	1.8311	0.4212	0.026	0.0110	
3	0.1307	0.0131	0.026	0.0003	ASSUME THE SAME GAS COMPOSITION AS 2
4	1.5177	1.973	0.174	0.3433	
5	2.9196	1.8977	0.272	0.5162	ASSUME THE RICH GAS COMPOSITION
6	1.8087	1.447	0.142	0.2055	
7	0.0763	0.0085	0.142	0.0012	ASSUME THE SAME GAS COMPOSITION AS 6
8	0.0162	0.0032	0.026	0.0001	ASSUME SAME AS 3
9	0.2324	0.1146	0.274	0.0314	ASSUME RICH GAS COMPOSITION
10	0.2048	0.0229	0.272	0.0062	ASSUME SAME AS 5
11	0.1027	0.048	0.272	0.0131	ASSUME SAME AS 5
12	1.1355	0.9084	0.142	0.1290	ASSUME SAME AS 6
13	0.0572	0.0069	0.237	0.0016	
14	0.0554	0.0283	0.142	0.0040	ASSUME SAME AS 6
15	0.2531	0.0192	0.274	0.0053	ASSUME SAME AS 9
16	0.0297	0.0048	0.142	0.0007	ASSUME SAME AS 6
17	0.0036	0.0011	0.142	0.0002	ASSUME SAME AS 6
18	0.0072	0.0022	0.142	0.0003	ASSUME SAME AS 6
24	0.0644	0.0129	0.274	0.0035	ASSUME SAME AS 9
27	0.0027	0.0006	0.142	0.0001	ASSUME SAME AS 6
29	0.0076	0.0015	0.272	0.0004	ASSUME SAME AS 5
40	0.0027	0.0003	0.272	0.0001	ASSUME SAME AS 5
41	1.4186	1.0725	0.272	0.2917	ASSUME SAME AS 5
TOTAL	12.4674	8.1335		1.5770	

1676

Table 3. Crude Oil, Associated Gas and NGL Rate

	FIELD PRODUCTION RATE 1997				
FIELD NO.	OIL RATE MT/Y	GAS RATE BCM/Y	NGL/GAS MT/BCM	NGL MT/Y	NOTE:
1	0.4982	0.1096	0.095	0.0104	
2	1.5104	0.1782	0.026	0.0046	
3	0.1079	0.0082	0.026	0.0002	ASSUME THE SAME GAS COMPOSITION AS 2
4	2.0617	2.7998	0.174	0.4872	
5	2.5604	1.6796	0.272	0.4569	ASSUME THE RICH GAS COMPOSITION
6	1.6933	1.38	0.142	0.1960	
7	0.0878	0.0098	0.142	0.0014	ASSUME THE SAME GAS COMPOSITION AS 6
8	0.0129	0.0026	0.026	0.0001	ASSUME SAME AS 3
9	0.2761	0.1524	0.274	0.0418	ASSUME RICH GAS COMPOSITION
10	0.1758	0.0197	0.272	0.0054	ASSUME SAME AS 5
11	0.1859	0.0877	0.272	0.0239	ASSUME SAME AS 5
12	1.5267	1.3267	0.142	0.1884	ASSUME SAME AS 6
13	0.1568	0.0188	0.237	0.0045	
14	0.1318	0.0659	0.142	0.0094	ASSUME SAME AS 6
15	0.4367	0.0332	0.274	0.0091	ASSUME SAME AS 9
16	0.1478	0.0236	0.142	0.0034	ASSUME SAME AS 6
17	0.0278	0.0111	0.142	0.0016	ASSUME SAME AS 6
18	0.0472	0.0189	0.142	0.0027	ASSUME SAME AS 6
20	0.0135	0.003	0.142	0.0004	ASSUME SAME AS 6
24	0.0628	0.0126	0.274	0.0035	ASSUME SAME AS 9
26	0.009	0.0022	0.142	0.0003	ASSUME SAME AS 6
27	0.039	0.0094	0.142	0.0013	ASSUME SAME AS 6
29	0.0154	0.0031	0.272	0.0008	ASSUME SAME AS 5
31	0.001	0.0003	0.272	0.0001	ASSUME SAME AS 5
33	0.001	0.0002	0.272	0.0001	ASSUME SAME AS 5
40	0.0307	0.0034	0.272	0.0009	ASSUME SAME AS 5
41	2.4764	2.2882	0.272	0.6224	ASSUME SAME AS 5
TOTAL	14.294	10.2482		2.0764	

1617

Table 3. Crude Oil, Associated Gas and NGL Rate

	FIELD PRODUCTION RATE 1998				
IELD	OIL RATE	GAS RATE	NGL/GAS	NGL	NOTE:
IO.	MT/Y	BCM/Y	MT/BCM	MT/Y	
1	0.4163	0.0941	0.095	0.0089	
2	1.239	0.054	0.026	0.0014	
3	0.0926	0.007	0.026	0.0002	ASSUME THE SAME GAS COMPOSITION AS 2
4	2.54	3.68	0.174	0.6403	
5	2.2495	1.5432	0.272	0.4198	ASSUME THE RICH GAS COMPOSITION
6	1.4812	1.1272	0.142	0.1601	
7	0.0916	0.0103	0.142	0.0015	ASSUME THE SAME GAS COMPOSITION AS 6
8	0.0104	0.0021	0.026	0.0001	ASSUME SAME AS 3
9	0.2737	0.162	0.274	0.0444	ASSUME RICH GAS COMPOSITION
10	0.1447	0.0162	0.272	0.0044	ASSUME SAME AS 5
11	0.2772	0.1369	0.272	0.0372	ASSUME SAME AS 5
12	1.7591	1.4337	0.142	0.2036	ASSUME SAME AS 6
13	0.2736	0.0328	0.237	0.0078	
14	0.2001	0.0856	0.142	0.0122	ASSUME SAME AS 6
15	0.6455	0.0491	0.274	0.0135	ASSUME SAME AS 9
16	0.3009	0.0587	0.142	0.0083	ASSUME SAME AS 6
17	0.0482	0.0407	0.142	0.0058	ASSUME SAME AS 6
18	0.0743	0.0627	0.142	0.0089	ASSUME SAME AS 6
19	0.0189	0.0126	0.142	0.0018	ASSUME SAME AS 6
20	0.0628	0.0139	0.142	0.0020	ASSUME SAME AS 6
	0.0027	0.0018	0.142	0.0003	ASSUME SAME AS 6
23	0.0054	0.0036	0.142	0.0005	ASSUME SAME AS 6
24	0.0533	0.0107	0.274	0.0029	ASSUME SAME AS 9
26	0.025	0.006	0.142	0.0009	ASSUME SAME AS 6
27	0.052	0.0124	0.142	0.0018	ASSUME SAME AS 6
28	0.0049	0.0011	0.142	0.0002	ASSUME SAME AS 6
29	0.002	0.004	0.272	0.0011	ASSUME SAME AS 5
30	0.0036	0.0017	0.272	0.0005	ASSUME SAME AS 5
31	0.016	0.0168	0.272	0.0046	ASSUME SAME AS 5
33	0.0067	0.0011	0.272	0.0003	ASSUME SAME AS 5
37	0.0135	0.0061	0.272	0.0017	ASSUME SAME AS 5
40	0.0307	0.0034	0.272	0.0009	ASSUME SAME AS 5
41	2.118	1.809	0.272	0.4920	ASSUME SAME AS 5
TOTAL	14.5334	10.5005		2.0895	

1618

FIGURES

FIGURE 1 RESERVOIRS IN PUR REGION
FIGURE 2 CXeMA (NGL PIPELINE SCHEMATIC)

Trip1.Doc

1519

ETIP TRIP REPORT

1520

Energy Technology Innovation Project

Suite 914 • 1601 North Kent Street • Arlington, VA 22209 • Tel. (703) 528-4488 • Fax (703) 528-2280
Bechtel Corporation, Prime Contractor

MEMORANDUM

November 19, 1993

TO: G/E, Samuel Schweitzer

FROM: ETIP, Robert J. O'Brien

SUBJECT: Trip Report - Russia, Natural Gas and Natural Gas Liquids Flaring Reduction Environmental Project, Bechtel Job No. 21615-003-600
October 22, 1993 to November 6, 1993

COPY: NIS/TF/EET, James Bever
G/E, Gordon Weynand
The World Bank, Roger Batstone and Selina Shum
USAID/RET, Moscow, Tom Rishoi
USAID/RET/IDEA, Moscow, Charles Moseley
NIS/TF/EET, Edvard Markeset
NIS/TF/EET/IDEA, Masood Malik
Bechtel, Hugh Van Hatten
ETIP, Frederick Karlson

1. INTRODUCTION

The subject study is being funded by USAID NIS/TF/EET through a Buy-In to R&D/E&I to support the World Bank in preparation of a major loan to effectively utilize associated gas in the Pur Region of Western Siberia.

The purpose of this trip was to assist World Bank in support of the Russian Partners [Purneftegas (PNG), Sibneftegaspererabotka (SNGP) and Gasprom] and Ruhrgas to prepare the Terms of Reference (TOR) for certifying oil and associated gas reserves, associated gas forecasts and the financial viability of PNG and its operations. An effort was also made to determine the availability, source and cost, if any, of the basic data needed by the contractors to perform the certification. The contractor, is to be of international repute and will be selected by competitive bid.

A Program of the Office of Energy and Infrastructure,
Bureau for Research and Development
U.S. Agency for International Development

The certification process is the responsibility of the partners's Working Group and is necessary to support funding requirements for a possible joint venture project. The joint venture would consist of Ruhrgas and the above named Russian partners and would collect and process the associated gas presently being flared in the Pur Region and distribute the resultant processed dry gas and NGL's for sale. This certification process is not part of the Subject Project, ie the Bechtel Interim Feasibility Study for facility design and cost determinations. Support was provided, however, at the request of the World Bank to assist in the preparation of Terms of Reference for the partners Certification Study.

The team preparing the TOR's during this trip was composed of K. Crowther (World Bank Consultant), A. Gebauer and H. Lubben (Ruhrgas), A.S. Filin and L.I. Morozov (SNGP consultants) and R.J. O'Brien (ETIP/Bechtel). Some team members were only engaged part-time in this effort.

2. EXECUTIVE SUMMARY

- Attended meetings with Mr. R. Kuzovatkin (Director of SIBNIINP), Mr. A. Lee (Deputy Director - Geology of PNG), British Petroleum Staff, Resources Group report to the Working Group and USAID Mission/Moscow Staff.

- Assisted Resources Group in preparing the following documents which are attached hereto:
  1. Attachment 1; Terms of Reference, "Certification of the Natural Gas Reserves and Production Forecasts of the Associated Gas in the Pur Region of Western Siberia", draft dated 11/3/93;

  2. Attachment 2; Terms of Reference, "Determination of Purneftegas' Financial Viability and Economic Assessment of its Operational and Development Program in the Pur Region of Western Siberia", first draft dated 11/5/93;

  3. Attachment 3; Report of the Resources Group to the Working Group, dated November 2, 1993 with Time Schedule for certification attached;

  4. Attachment 4; letter to Mr. A. Lee on outstanding issues for certification.

Based on information obtained on this trip, conclusions are as follows:

- Associated Gas Forecasts:

  - Additional operational information reveals more uncertainty in the Associated Gas Forecasts.

1622

- SIBNIINP provided two significantly different forecasts to 1) ETIP/Bechtel (which maximizes short-term associated gas production) and 2) Ruhrgas (which maximizes long-term gas production). Gas rates provided to ETIP/Bechtel are considerably higher in the next 5 to 10 years. One reason for these differences in forecasts is an empirically applied change in production practices.

- Difficulty in funding has reduced PNG's development drilling program for 1993 from a planned 400 to an actual 250 wells. This suggests PNG may have difficulty in meeting associated gas forecasts for fields on production and possibly a difficultly in funding development of new fields.

- Operational information suggests one source of excess associated gas production is very likely to be gas cap gas migrating behind casing (due to poor primary cement) to oil zone perforations. Secondly, poor pressure distribution, caused by ineffective water injection could be causing extra quantities of solution gas to be liberated in the oil reservoirs. Both conditions are correctable if funds are available to do so. If measures were undertaken, associated gas production would be reduced.

- The above items further support the need for the certification process currently underway for associated gas and condensate gas reserves and forecasts.

- Processed data for the certification process is likely to be available from various sources such as SIBNIINP, PNG, Purneftegasgeologia etc. Special core analyses, seismic data, certain reservoir fluid analyses, etc. are not available and some routine basic data may be limited or difficult to obtain. SIBNIINP can provide most processed data but requested $1.0 million to do so, plus manpower costs. PNG can also provide most of the needed information at no cost, if authorized by their Director General.

- The report of the Resources Group (RG) to the Working Group was made on November 4 with the following results:

  - Time schedule for the certification process was presented concluding in March 1995. PNG insisted the certification be finished sooner. Funding for the certification would be Ruhrgas 50% and Russian Partners 50%. The World Bank is arranging a Japanese grant for the Russian Partners share.

1523

- The World Bank bid procedures are to be used for the request for bids and selection of bidders for certification process.

- The next Working Group and Resources Group meetings are scheduled for November 18th to approve a) draft TOR for certification, b) composition of RG members, and c) bidders short list, and to review Financial TOR and Certification Time Schedule. RG is to prepare a budget for the certification study.

3. VISIT TO SIBERIAN SCIENTIFIC RESEARCH INSTITUTE FOR THE OIL INDUSTRY (SIBNIINP), TYUMEN, WESTERN SIBERIA (OCTOBER 25-27)

- Discussions were held with Mr. R. I. Kuzovatkin, Director of SIBNIINP, on the availability, quality and cost, if any, of basic and processed data for use in the certification of reserves and forecasts.

- SIBNIINP can provide some of the basic raw data and most of the processed data required for certification. No inspection of the data was permitted. They advised that any data not in their possession could be obtained.

- SIBNIINP'S requested fee to provide the data was $1.0 million. Professional manpower provided by SIBNIINP would be at a cost of $500 to $1,000 per man-day.

- It should be noted that the certifying contractor may not accept only processed data and maps but will likely insist on raw data to verify processed information. It is uncertain if all the raw basic data is available to SIBNIINP and if its quality is adequate.

- The trip from Tyumen to Gubkinski was cancelled since the key contact, Mr. A. Lee, was in Moscow and alternate contacts were not available. The team departed on October 27 for Moscow to meet with Mr. Lee.

4. MEETING WITH MR. ALEXEY A. LEE, PNG DEPUTY GENERAL DIRECTOR, GEOLOGY, MOSCOW (OCTOBER 28)

- Discussions were held regarding certification basic data availability, quality and cost, if any for certification purposes. Attending were Messrs. Crowther, Gebauer, Morozov, Filin and O'Brien.

1624

- Mr. Lee advised that PNG can provide most of needed data, with or without cost, if authorized by Mr. V. Ageev (Director General, PNG). Concurrence of ROSKOMNEDRA may also be required and assistance for obtaining this concurrence should be solicited from the Ministry of Fuels and Energy.

- PNG can provide logs, structure and isopach maps, routine core data, access to core materials at SIBNIINP, fluid analyses or generalized fluid analyses, fluid production data, isobaric maps on a quarterly basis, well summaries, etc. Data for North Gubkinski field (Joint Venture with GEOILBENT) may be limited. SIBNIINP is responsible for providing data to PNG but are presently about one year behind in delivery.

- PNG sold data on South Kharampur field to British Petroleum to perform a feasibility study for a possible joint venture project.

- Certifying contractor should provide their own copying equipment and supplies for collecting data in Gubkinski.

- PNG can accommodate a Pre-Bid meeting in Gubkinski and can provide presentations by their technical experts for each major field.

- Funding for PNG's drilling operations is a problem. In 1993, 400 wells were scheduled to be drilled but due to limited funds, only 250 are now anticipated. The target for 1994 is 250 wells but they could fall short of this. Mr. Lee blamed falling crude prices and difficulty in getting paid as causing this problem. PNG is being forced to lay down rigs and lay off crews.

- PNG can provide most of the needed data, are willing to work with the contractor if authorized to do so by Mr. Ageev and should be approached first to provide data at no cost. Data which exists, but not in PNG's possession, can be requested from SIBNIINP, Purneftegasgeologia, etc.

5. MEETING WITH BRITISH PETROLEUM (BP), MOSCOW (OCTOBER 29)

BP agreed to meet with Ken Crowther (World Bank Consultant) and Bob O'Brien (ETIP) to discuss: A) data acquisition from PNG and their feasibility study of South Kharampur field, and B) their workover efforts in Tarasov field. Representing BP were Smith Bobbit - BP Exploration Representative in Moscow, and (via a conference call to London) Ian Brown - Geologist and Dave Russell - Asset Manager, Russia.

A. BP's South Kharampur Field Development Feasibility Study

1526

- BP paid PNG $300,000 to $350,000 for basic and processed data and for SIBNIINP's development feasibility study to conduct its own feasibility study. PNG was free to give or sell the SIBNIINP study to a third party since they had paid to have the report prepared.

- Core material in SIBNIINP's possession has been badly picked over and not much remains. It was necessary for PNG to facilitate BP access to cores with SIBNIINP.

- SIBNIINP performs routine core analyses for PNG and then averages measurements over one meter intervals, making it difficult to identify high permeability streaks. No actual core plug measurements were available. Little if any special core analyses were available.

- North Kharampur production data is available only by cluster and not by individual wells. GOR assigned to individual wells are averaged from the clusters.

- Data gathering for South Kharampur took BP's staff of 4 to 5 people, a total of 3 weeks to obtain.

- BP suggested that the contractor collecting the data be familiar with Russia data format and be very specific in what they request (Note: a contractor with previous Russian experience would be beneficial).

- BP noted a lack of sufficient core data, and no dynamic information, reliable reservoir fluid data or relative permeability data.

- BP suggested that originally determined oil and gas reserves (usually determined by Purneftegasgeologia) should be discounted by half.

- For future joint venture field development projects, it was suggested to collect one's own reservoir fluid data. They also suspect numerous small faults are present (as indicated by pressure distribution in Tarasov Field) but are not shown on existing structure maps. They suggest re-shooting seismic (probably requiring 3D) for joint venture projects.

- BP stated they made their South Kharampur study available to World Bank (Note: It is believed only a draft copy of Volume 1 was made available but not Volume 2 which contained maps, tables, and support data). It is suggested the World Bank request a final copy of BP's report if they do not have it.

- Seismic data was not made available to BP and Purneftegasgeologia refuses to provide it. PNG would likely have to take legal action to obtain it.

1526

B. Tarasov Field Workover Project

- It took BP six months to negotiate this contract.

- Primary casing cement jobs are very poor. In their workover efforts BP is cementing off everything.

- When queried about probable source of excess associated gas production, BP did not think the source was the Cenomanian, dry gas horizon since it is 1000 meters higher than the oil zones. The lowest zone beneath the oil horizons is a gas cap and could be a source of excess gas production due to poor cement jobs which are known to exist.

- BP thought the pressure distribution was not good throughout the Tarasov field, i.e., not sufficient water being injected and an ineffectual water flood. The field is also at the bubble point and any pressure reduction will cause solution gas to be liberated. PNG said they filter the injected water (river water and produced water) but no filter facilities were apparent to BP. It is suspected water injection may partially cease during the winter since buried injection lines may freeze. Generally, there is only one injector for three producers.

- BP has a chartered flight provided by PNG every two weeks (London/Moscow/Noyabrisk) which has extra space. They provided a copy of their memo concerning the flight (attachment 5) and offered access to it.

6. MEETING WITH MR. R. I. KUZOVATKIN, DIRECTOR, SIBNIINP, AT RUHRGAS OFFICE, MOSCOW, NOVEMBER 2, 1993

- Three differing forecasts of associated gas have been provided by SIBNIINP to Ruhrgas and ETIP/Bechtel. This is a matter of concern and was discussed with Mr. Kuzovatkin and R. J. O'Brien. The first forecast provided to Ruhrgas was based on old information as stated by Mr. Revenko (SIBNIINP) at the Houston meeting in September. The forecast provided by Mr. Revenko to ETIP/Bechtel in July 1993 contains considerably higher rates than those subsequently provided to Ruhrgas by Mr. Kurzovatkin following the Houston meeting.

- The comparison of the two most recent forecasts, for 20 fields presently on production or planned for development by the end of 1995, is shown below. These forecasts are for associated gas production at the separators before deducting own use, losses, uneconomical streams, etc. Both estimates were provided by SIBNIINP and

1521

are based on proven reserves for most fields although certain fields also contain probable reserves.

	93	94	95	96	97	98	YEAR
To ETIP/Bechtel	4.3	4.6	5.6	7.3	8.9	9.3	BCM/Yr
To Ruhrgas	4.3	4.3	4.7	5.8	6.4	6.5	BCM/Yr
Difference	0	0.3	0.9	1.5	2.5	2.8	BCM/Yr

- When asked why these forecasts coming from the same source are not similar, Mr. Kuzovatkim stated the difference between the two forecasts was that the forecast provided to ETIP/Bechtel maximizes the short-term production of associated (i.e., current production practices) whereas the forecast provided to Ruhrgas maximizes the long-term production of associated (i.e., SIBNIINP applied an empirical adjustment to reflect undefined changes in production practices, which extend the depletion of associated gas).

- The consequence of these two differing forecasts as provided by SIBNIINP is additional uncertainty in the forecast of associated gas and reinforces the need for certification of reserves and forecasts by an outside contractor.

7. PREPARATION OF TOR'S, RUHRGAS OFFICE MOSCOW, OCTOBER 30 - NOVEMBER 3

- The Resources Group prepared the following documents for the Russia-Environmental Gas Utilization Investment Project. Copies of the documents are attached.

  - Draft TOR "Certification of the Natural Gas Reserves and Production Forecasts of the Associated Gas in the Pur Region of Western Siberia," dated November 3, 1993 (attachment 1).

  - First draft TOR "Determination of Purneftegas' Financial Viability and Economic Assessment of its Operational and Development Program in the Pur Region of Western Siberia," dated November 5, 1993 (attachment 2).

  - Report of the Resources Group to the Working Group, dated November 2, 1993, which included a preliminary time table/schedule for the complete certification process (attachment 3).

8. RESOURCE GROUP MEETING WITH WORKING GROUP, RUHRGAS OFFICE MOSCOW, NOVEMBER 4

1528

Working Group Key Members: U. Scholer-Ruhrgas, V. Ageev-PNG, V. Konyuchenko-SNGP, an observer from Gasprom. Mr. H. Wackman represented the World Bank.

Resource Group: H. Lubben and A. Gebauer-Ruhrgas, K. Crowther-World Bank Consultant, R. J. O'Brien-ETIP/Bechtel, L. Morozov and A. Filin-SNGP consultants.

- Professor Lubben presented the TOR's for Certification of Forecasts and Financial Assessment and the Report to the Working Group dated November 2, 1993. Comments on, and approval of, the TOR for certification (Item 1, attachment 3) were requested for the next Resources Group meeting.

- Members for the Resources Group (RG) was discussed (Item 2, attachment 3). The RG recommended Mr. A. Lee (PNG) chair the group with H. Lubben as vice-chairman. Other members suggested by the Working Group were T. Pipa (Nipigas), K. Crowther (World Bank Consultant), V. Revenko (SIBNIINP), L. Morozov (SNGP Consultant), and a Gasprom member.

  Cost of RG would be borne by each member's company, until the consortium is formed, with the exception of outside experts from Nipigas and SIBNIINP. No decision was taken as to whom would pay their costs. (Note: With SIBNIINP trying to obtain a contract to provide data and manpower for the certification, it would seem they might be less than objective in RG matters relating to the certification process i.e., negotiations on cost for providing being basic data, selecting short list of international and local contractors, bid evaluation, contractor selection, etc.)

- Ruhrgas and World Bank agreed to proposed RG members but Mr. Ageev advised that Mr. Lee must be asked if he will accept the chairmanship, and other proposed members must also agree to serve.

- Availability of certification data from PNG was discussed (Item 3, attachment 3), along with whether the data could be provided free to the certifying contractor. Mr. Ageev suggested SIBNIINP or some other institution provide the data for a fee since they were in difficult financial situations. He was also unsure if PNG had such data, but Mr. Crowther advised they had most of the needed data. Mr. Ageev will look into the matter and revert.

- Mr. Scholer asked if PNG could provide field feasibility studies prepared by Western companies. Mr. Ageev will check the contracts regarding release of the studies to third parties.

- Time schedule for Certification process was presented by K. Crowther (Item 6, attachment 3). Mr. Ageev expressed concern about the time required (conclusion 3/95) and said it must be finished sooner. A cost estimate to perform the certification

1529

process was requested from RG. Funding for the study is to be 50% by Ruhrgas and 50% by Russian partners. The latter is to be assisted with funding from a Japanese grant, which is being arranged by the World Bank.

- Mr. Ageev wants the Certification of Financial Validity and Economic Assessment Study to be performed earlier than shown on the schedule and that capital costs for field exploration and appraisal be included. Mr. Scholer wants the study to include costs for determining economics but not sunk costs. Mr. Wachman sees the need for such data but suggested the cost of acquiring it need not be shared by Ruhrgas. No firm decision was taken.

  Mr. Scholer stated the Resources Certification Study is on the critical path for this project and it should be progressed without delay.

  The World Bank procedures for request for bids and selection of bidder is to be used. The World Bank will handle sending out the request for bids once the TOR is approved by the Working Group and funding is finalized.

  Comments were invited on the short list for contractor for certification of resources (Item 4, attachment 3). Firms need to be of international repute but can employ local firms and experts. Attachment 3 of the certification TOR includes a list of Russian experts for consideration. International and Russian contractors short list will be discussed at the next RG meeting in November.

- The next meeting of the Working Group is set for November 18, 1993, and tentatively the same date for the next Resources Group meeting. A letter was sent to Mr. Lee outlining issues to be considered by RG for this next meeting, (attachment 4).

9. MEETING WITH CHARLES MOSELEY (IDEA), JIM WILSON (USAID/MOSCOW), ANDRES DOERNBERG (IDEA) AT USAID MISSION, MOSCOW, NOVEMBER 5

- Van Hatten and O'Brien briefed USAID on status of their respective efforts in Russia and discussed gas conservation, other possible alternatives for associated gas usage and methods to assist the Russians in their energy sector.

1630

Attachment 1

Draft 11/03/93 04:01 PM

RUSSIA - ENVIRONMENTAL AND GAS UTILIZATION

INVESTMENT PROJECT

PURNEFTEGAS ASSOCIATED GAS RECOVERY PROGRAM

TERMS OF REFERENCE

CERTIFICATION OF THE NATURAL GAS RESERVES

AND PRODUCTION FORECASTS

OF THE ASSOCIATED GAS

IN THE PUR REGION OF WESTERN SIBERIA

BACKGROUND

1. The Government of Russia considers flaring of oil gas (i.e., associated gas and natural gas liquids) to be a significant environmental and economic problem. Presently, associated gas production for the Pur region is 4.3 Billion Cubic Meters (BCM) per year, with half of this volume being flared. Predictions indicate flared volumes will more than triple in the next five years. To mitigate this problem, the government has formulated an investment program for increasing the level of utilization (i.e., collection efficiency) and improving associated gas processing in the Pur region of Western Siberia. Consideration by international and Russian entities for a project to utilize the associated gas produced from the Pur region is currently being undertaken. This project is considering installing a gas gathering system, gas processing plant(s), a distribution system for the natural gas liquids and a tie-in line to Gasprom's distribution system to export processed dry gas to Germany.

2. In order to justify the large capital expenditures required to curtail the flaring and initiate the processing of the associated natural gas and natural gas liquids, the quantities of these resources must be determined and a twenty year production forecast of the associated gas should be determined. A high degree of confidence in these values must exist before the potential international financiers, including the World Bank and Ruhrgas can proceed with the consideration of investment financing.

1531

3. There are thirteen production associations in the Tyumen area of Western Siberia. Purneftegas is the production association responsible for the oil and gas production in the Pur Region of Western Siberia. Each production association is responsible for the oil and gas production in their specific area. In addition, each of the oil production associations is responsible for collecting "wet" gas in the field from initial separation facilities. Sibneftegaspererabotka (SNGP) is the state-owned enterprise charged with the responsibility of taking delivery of the "wet" gas from the oil producing associations. The "wet" gas is collected from the fields, SNGP is responsible for carrying out further separation and delivering natural gas liquids (consisting primarily of propane, butane, and pentane) to transport facilities, and the processed "dry" natural gas (defined as predominantly methane and ethane), after compression, to Gazprom (the Russian gas production and transmission concern).

4. Purneftegas is currently responsible for the operations of approximately 20 different oil fields in the Pur region. Twelve of these oil fields have been placed on production with the first field (Novo-Purpeyskoye) commencing production in 1985. It is planned to place the remaining 8 fields on production at various times through the year 1995. There are approximately thirty additional fields which are projected to be placed on production after 1995 ,however, these fields are not included in this study. A list of the fields to be considered in this study is presented in Attachment I of this document.

5. Ruhrgas, a major gas company in Germany, is a potential investor in the project. As a first step, a Working Group has recently been formed consisting of Ruhrgas and the three potential Russian partners; "Purneftegas, Sibneftegazpererabotka, and Gazprom". The task of the Working Group is to conduct further investment studies utilizing this oil and gas assessment and certification study.

<u>OBJECTIVE: Oil and Gas Assessment Study</u>

6. The economic viability of the proposed gas processing facilities is critically dependent on the quantity and composition of feed gas. However, the data thus far provided to the World Bank and Ruhrgas on the projected associated gas production rates in the region are not sufficiently detailed to determine their reliability or for using as a basis for justifying commitments for major investments in facilities to recover and process the gas at this juncture. In order to minimize the economic risks relating to the uncertainties of feed gas volume, it is essential that the oil and gas reserves , rate predictions and gas composition be corroborated. This will entail an oil and gas assessment study of producing fields using the available reservoir data and pressure-production statistics, oil and associated gas reserves determinations and field development rehabilitation programs, either prepared by Russian organizations or international oil companies. In addition, this assessment study should include reservoir and field development plans of each new major field to be placed on production through the year 1995.

1632

7. The above oil and gas reserve assessment study would be carried out by a reservoir engineering contractor of international reputation acceptable to the various lending institutions providing the loan for the Russia - Environmental and Gas Utilization Investment Project. This consultant would bring to bear their international experience and state of the art reservoir engineering techniques, including reservoir modelling if practical.

8. The financing of this study is expected to be jointly shared by Ruhrgas (50%) and the Russian partners (50%) in the working group.

SCOPE OF WORK

9. This study will provide a clear understanding of the potential quantities, reserves and annual rates and composition of associated gas and the natural gas liquids available to sustain at least twenty years of associated gas production for use as feed stock to justify the economics of downstream processing facilities.

10. It will focus on the short-medium and long term availability of associated gas and natural gas liquids from the oil production of Purneftegas in the Pur Region of Western Siberia. The availability of associated gas and natural gas liquids should include production from the existing fields under current conditions, the potential for increased oil production from the oil fields with improved reservoir management operations and production from oil fields identified for development but are not on production at this time. This assessment should focus on the total production of associated gas being utilized and flared. Further, based on available information, prior studies, interviews with Purneftegas, and other appropriate sources, the study will also focus on the availability of significant new wet gas supplies from condensate fields to be developed. From initial indications, the gas plant feed stock will require the addition of gas from these condensate reservoirs. Since wet gas deliverability , composition and reserves from condensate reservoirs are of major significance, at least one of these reservoirs should be reviewed in addition to the five fields already identified.

1533

11. There are a number of uncertainties associated with the future development of the oil fields operated by Purneftegas in the Pur region of Western Siberia. The consultant will be required to address several different oil field development scenarios resulting in significantly different associated gas production forecasts. These developments would range from 1) a base case where all future developments are carried out using the current production practices (i.e. present methods of waterflood operations, continued production of excess associated gas etc.), and 2) an optimum case for oil production and gas utilization or conservation. Finally, 3) using technical risk analysis, a most likely case should be developed which would be a mixture of the current production practices and the latest reservoir management practices.

12. There are twelve fields presently on production under the operation of Purneftegas, and a detailed reservoir study of each of these fields would result in a cost which would be prohibitive. Furthermore eight additional fields are planned for development through 1995. Using the information supplied to the World Bank from the various organizations, it has been determined that by studying three of the oil fields currently on production, namely Tarasovskoye, Komsomolskoye, and Severo-Kharampurskoye, and two oil fields that are to be brought on production in the near future, namely Yuzhno Kharampurskoye and Severo Gubkinskoye, would result in approximately 80 percent of the projected associated gas being covered in this study. Taking this into consideration, the consultant will prepare a detailed reservoir engineering study on the above named five fields. A brief description of each of these fields is listed on Attachments 2A through 2E. The consultant will also perform a review or audit on the remaining fifteen fields resulting in confirmation of all the oil, associated natural gas and associated natural gas liquids reserves. The gas condensate reservoir will also require a review by the consultant. By incorporating the above information the consultant will prepare an oil and natural gas production forecast and composition on a field basis and in total for the twenty fields in question until the year 2020.

1634

RESERVOIR STUDY OF PURNEFTEGAS - OILFIELDS IN THE PUR REGION (WEST SIBERIA)

BACKGROUND

1. Brief description of the field(s) to be studied in detail including:

   a. Location
   b. Overview of regional geology
   c. Overview of field geology
   d. Field history
   e. Statistics on rates and cumulative production of oil, gas and water
   f. Current operational plan/facilities.

2. Description of available data for use in the study:

   a. Limited geophysical data
   b. Base map, structure maps and isopach maps, and sample cross-sections showing depositional concept of layers
   c. Cores for description (wells and length)
   d. Wells logs (types)
   e. Sample log suite
   f. Core reports (routine and limited special)
   g. Limited reservoir fluid analysis
   h. Pressure tests and isobaric maps as a function of time
   i. Well histories
   j. Facility schematics
   k. Production / Injection histories
   l. Access to / participation of knowledgeable Russian geologists and engineers
   m. Economic factors including operating and capital costs for unit items.

1535

OBJECTIVES

1. Review the operators existing development plan and develop an optimum plan of depletion of oil and gas for the 5 fields until the year 2020. This plan should be based on the latest reservoir engineering techniques which considers available seismic, core, well production history and log data. Historical performance should be studied in an attempt to quantify current drive mechanisms. Reservoir simulation may also be used to study depletion scenarios. Complete modelling of the reservoirs and history matching is not required since adequate data is unlikely to be available. The depletion scenarios should be subjected to an economic evaluation to determine the economic optimum plan of operation for both oil and gas. This economic assessment should only consider the field operations , terminating at the flange of the first stage oil and gas separator. Bechtel Corporation has been commissioned to determine the downstream economics of the gas gathering and processing systems. the economics should be based on the associated gas price as obtained from the results of the Bechtel Interim Feasibility Study.

2. Develop a common data base and surveillance plan for use in ensuring an orderly collection and maintenance of the data necessary to properly operate the field(s).

3. The possibility to provide training of participating Russian geologists and engineers in the techniques used during the study, is to be considered.

4. The oil and gas reserves for the previously identified 5 fields are to be determined and certified, for the purpose of loan application, by the contractor along with the forecasts of oil, associated gas, and condensate gas to year 2020. This certification also includes a review and audit of the remaining 15 fields.

SCOPE OF WORK

1. Phase I
   Collect available data and build a reservoir data base. Adjust work programs as necessary.

2. Phase II
   Review the operators geologic description for each of the 5 fields and revise as necessary, commensurate with available data:
   a. Lithologic review of cores
   b. Seismic analysis, if available
   c. Structural geology
   d. Stratigraphic subdivision into genetic increments of strata
   e. Petrophysical analysis

1636

f. Identification of fluid contacts and petrophysical cutoff values
g. Reservoir mapping of gross and effective thickness, porosity, permeability and water saturation. Calculate oil and gas-in-place.

Also compile / analyze reservoir data:

a. Describe reservoir fluids, type and distribution
b. Describe rock properties and assign distributions for capillary pressure, relative permeability and rock compressibility.
c. Review core and log data to determine the degree of heterogeneity within individual reservoir layers.
d. Review production / injection statistics, pressure measurements and well histories for an understanding of field performance.
e. List or record any significant missing or lack of sufficient basic data which effects or reduces the accuracy of the final study results.

3. Phase III

Build small scale or sectional models of the reservoir, if practical, to better understand the effect of heterogeneity / layering within reservoir units. These models may consist of radial (r-z) coning models, arcal (x-y) models to describe pattern sweep, or cross-section (x-z) models to describe fluid segregation / layering effects on reservoir performance. One dimensional models (x) may be used to determine the appropriate reservoir fluid description (compositional vs. black oil).

4. Phase IV

Prepare reservoir engineering estimates of oil and gas forecasts based on the latest reservoir engineering techniques. History match, if practical, available data to identify current drive mechanisms / efficiency of water injection etc.

5. Phase V

Using the latest oil field technology, review operational practices and alternatives. These might include:

a. Alternative depletion rate sensitivities
b. Alternative well spacing policies
c. Alternative completion policies
d. Alternative injection pattern policies
e. Alternative recovery mechanisms
f. Alternative injection policies, such as lean gas re-injection, enriched gas injection for miscible displacement etc.

1537

6. Phase VI

Transfer results of study

a. Prepare detailed report.

b. Provide any computer files and other materials to client.

TIMING

Any time constraints would need to be specified. These, in turn, may affect what truly can be accomplished with respect to the Scope of Work. What is shown above as Phases I - VI represents, approximately 6-12 months effort in total. This, however, could be impacted by the time for meetings and approvals by the clients. As you are aware, communication difficulties can significantly slow down the expected pace of a project.

The bidder on the project is expected to submit a critical path diagram showing the project schedule.

RESOURCES

An organization chart is to be submitted showing the manner in which the project would be staffed. Curriculum vitae are to be furnished for each member of the team. Information on the overall resources of the company (e.g.: type of software programs available, etc.).

The use of a Russian consulting firm specializing in the field of oil and gas assessment should be considered at the discretion of the consultant on a sub-contracting basis. Such a Russian firm, to provide local expertise, is to be encouraged and will be viewed favorably in the selection process.

A list of Russian consulting firms or institutions is shown in Attachment 3 for the consideration of the bidder. Local assistance in this study need not be limited to this list.

1638

OTHER INFORMATION

The bidder is asked to provide background on his company and a description of other work which he has performed similar to the proposed project and specifically identify any Russian experience to date.

REVIEW MEETINGS

15. The contractor will have two review meetings:

i) First meeting will be held in Moscow after the collection and the analysis of the data (phase I + II) by the contractor to ensure that the essential data has been obtained to complete the tasks, and to identify the methods to be used in the study. Following the review, the approval of the Working Group must be obtained before proceeding to the next phase.

ii) The Final review meeting will be held in Moscow on completion of the draft final report. A review of the study and its results will be presented by the Contractor. The final report will be issued immediately following this final meeting.

1539

ATTACHMENT 1

TABLE OF OPERATED OIL FIELDS

1.	Novo-Purpeyskoye	1985
2.	Barsukovskoye	1986
3.	***Tarasovskoye**	**1986**
4.	Verkhne - Purpeyskoye	1987
5.	***Komsomolskoye**	**1988**
6.	***Kharampurskoye**	**1990**
7.	Ust-Kharampurskoye	1990
8.	Zapadno - Purpeyskoye	1995
9.	Severo - Tarasovskoye	1992
10.	Gubkinskoye	1992
11.	Prisklonovoye	1993
12.	***Yuzhno - Kharampurskoye**	**1994**
13.	Izvestinskoye	1993
14.	***Severo - Gubkinskoye**	**1993**
15.	Severo - Komsomolskoye	1994
16.	Severo - Aivasedopurovskoye	1994
17.	Festivalnoye	1995
18.	Vostochno - Tarkosalinskoye	1995
19.	Zapadno - Tarkosalinskoye	1995
20	Meretoyakhinskoye	1995

* Fields to be studied in detail.

1640

ATTACHMENT 2A

Tarasovskoye

Discovery date	1975
Location:	45 Kms from Tarko-Sale

Remaining Recoverable Reserves

Oil	131 Million Tonnes
Associated Gas	
Gas cap	18 BCM
Solution	22 BCM

Major Oil Horizon Parameters

Zone	B10-B11
Area	22325.5 hectares
Reserves	47.8 Million Tonnes
Density	0.82 oil
Temperature	80 deg C
Depth	2498 meters

Major Gas Cap

Zone	B10-B11
Gas Reserves	18 BCM
Depth	2498 meters

Production History

Start	1986
1992 Oil Prod.	4705 Thousand Tonnes
Water Cut	21 %
1992 Water Inj.	18540 Thousand Cubic Meters
Cum Oil To 1-1-93	28232 Thousand Tonnes
Oil Producers	842 wells (600 active)
Water Injectors	296 wells (188 active)
Gas Lift	309 wells

1541

Komsomolskoye

Discovery date	1966
Location:	105 Kms from Tarko-Sale

Remaining Recoverable Reserves

Oil	121 Million Tonnes
Associated Gas	
Gas cap	22.4 BCM
Solution	8.9 BCM

Major Oil Horizon Parameters

Zone	B6
Area	5609.0 hectares
Reserves	44.9 Million Tonnes
Density	0.843
Temperature	70 deg C
Depth	2308 meters

Major Gas Cap

Zone	B6
Gas Reserves	4.7 BCM
Depth	2300 meters

Production History

Start	1988
1992 Oil Prod.	381 Thousand Tonnes
Water Cut	24 %
1992 Water Inj.	1388 Thousand Cubic Meters
Cum Oil To 1-1-93	1728 Thousand Tonnes
Oil Producers	181 wells (155 active)
Water Injectors	9 wells (8 active)
Gas Lift	120 wells

1812

ATTACHMENT 2C

Kharampurskoye

Discovery date	1979
Location:	120 Kms from Tarko-Sale

Remaining Recoverable Reserves

Oil	99 Million Tonnes
Associated Gas	
Gas cap	2.1 BCM
Solution	23.5 BCM

Major Oil Horizon Parameters

Zone	H1
Area	19975.0 hectares
Reserves	35.6 Million Tonnes
Density	0.819 oil
Temperature	85 deg C
Depth	2847 meters

Major Gas Cap

Zone	K16
Gas Reserves	2.1 BCM
Specific Gravity	0.567
Depth	1728 meters

Production History

Start	1990
1992 Oil Prod.	423.8 Thousand Tonnes
Water Cut	5 %
1992 Water Inj.	634 Thousand Cubic Meters
Cum Oil To 1-1-93	728 Thousand Tonnes
Oil Producers	25 wells (23 active)
Water Injectors	5 wells (4 active)

1543

ATTACHMENT 2D

Yuzhno-Kharampurskoye

Discovery date	1979
Location:	120 Kms from Tarko-Sale

Remaining Recoverable Reserves

Oil	69 Million Tonnes
Associated Gas	
Gas cap	1.6 BCM
Solution	23 BCM

Major Gas Cap

Zone	B6
Gas Reserves	4.7 BCM
Depth	2300 meters

Production History

Start	1988
1992 Oil Prod.	381 Thousand Tonnes
Water Cut	24 %
1992 Water Inj.	1388 Thousand Cubic Meters
Cum Oil To 1-1-93	1728 Thousand Tonnes
Oil Producers	181 wells (155 active)
Water Injectors	9 wells (8 active)
Gas Lift	120 wells

1644

ATTACHMENT 2E

Severo-Gubkinskoye

Discovery date	1980
Location:	60 Kms from Tarko-Sale

Remaining Recoverable Reserves

Oil	28.1 Million Tonnes
Associated Gas	
Gas cap	37.4 BCM
Solution	4.4 BCM

Major Oil Horizon Parameters

Zone	B8	B10
Area	2032.0	2998.0 hectares
Reserves	13.6	9.5 Million Tonnes
Density	0.831	0.832 grams per cub.centimetres
Temperature	71	71 deg C
Depth	2130	2470 meters

Major Gas Cap

Zone	B7	B10
Gas Reserves	20.7	14.7 BCM
Depth	2265	2410 meters

Production History

Start	1993	
1992 Oil Prod.	n.a.	Thousand Tonnes
Water Cut	n.a.	
1992 Water Inj.	n.a.	Thousand Cubic Meters
Cum Oil To 1-1-93	n.a.	Thousand Tonnes
Oil Producers	n.a.	wells (n.a.)
Water Injectors	n.a.	wells (n.a. active)

1546

Attachment 3

All Russia geological institute of oil (VNIGNI)

Russia, 105812 Moscow, Entuziastov 36

tel 273-47-17
fax 273-55-38

Vladimir Ilyich Poroskun
Ph.D. of Geological-Mineralogical Sciences
Chief of oil and gas reserves evaluation department

Engaged in: oil and gas reserves evaluation methods and estimate characteristics development. Russian Federation State Committee Expert on oil reserves. A member of Central Committee on reserves "ROSCOMNEDRA". Participated in oil and gas reserves estimate in Tyumen province of West Siberia. Has international experience of evaluation of resources (worked in Afghanistan, Ethiopia, Yemen).

Institute of Geology and Combustible Production Resources (IGIRGI)

Russia, 117312 Moscow, Fersman street 50

tel (095) 124-95-00
fax 129-41-07

Michael Vasil'yevich Korzh
Prof. of Geol.-Miner. Sciences
Head of Paleogeographic Laboratory for Oil and Gas Regions
A specialist in lithography, paleogeography of sediment basins.

1646

First Draft 11/05/93 02:48 PM

RUSSIA - ENVIRONMENTAL AND GAS UTILIZATION

INVESTMENT PROJECT

PURNEFTEGAS ASSOCIATED GAS RECOVERY PROGRAM

TERMS OF REFERENCE

DETERMINATION OF PURNEFTEGAS' FINANCIAL VIABILITY AND ECONOMIC ASSESSMENT OF ITS OPERATIONAL AND DEVELOPMENT PROGRAM IN THE PUR REGION OF WESTERN SIBERIA

1. The Government of Russia considers flaring of oil gas (i.e., associated gas and natural gas liquids) to be a significant environmental and economic problem. To mitigate this problem, the government has formulated an investment program for increasing the level of utilization (i.e., collection efficiency) and improving associated gas processing in the Pur region of Western Siberia. Presently, associated gas production for the Pur region is 4.3 Billion Cubic Meters (BCM) per year, with half of this volume being flared. Predictions indicate flared volumes will more than triple in the next five years. Consideration by international and Russian entities for a project to utilize the associated gas produced from the Pur region is currently being undertaken. This project would include a gas gathering system, gas processing plant(s), a distribution system for the natural gas liquids and a tie-in line to Gasprom's distribution system to export processed dry gas to Germany.

2. In order to justify the large capital expenditures required to curtail the flaring and initiate the processing of the associated natural gas and natural gas liquids, it was necessary to certify associated gas production forecasts and composition for a twenty year period. These certfied reserves and forecasts are available to support potential international lending institutions and investors, including the World Bank and Ruhrgas, for consideration in investment financing. A financial analysis of Purneftegas and its operation is to be undertaken. Based on the resource determinations, a financial analysis

1547

is required to confirm Purneftegas' ability to fund the capital expenditures and operating and maintenance expenditures to 1) continue operation of those fields presently on production and 2) to place on production those fields which have been selected for development through the year 1995.

3. There are thirteen production associations in the Tyumen Oblast area of Western Siberia. Purneftegas is the production association responsible for the oil and gas production in the Pur Region of Western Siberia. Each production association is responsible for the oil and gas production in its specific area. In addition, each of the oil production associations is responsible for collecting "wet" gas in the field from initial separation facilities. Sibneftegaspererabotka (SNGP) is the state-owned enterprise charged with the responsibility of taking delivery of the "wet" gas from the oil producing associations. The "wet" gas is collected from the fields and SNGP is responsible for carrying out further separation or processing and delivering natural gas liquids to transport facilities, and the processed "dry" natural gas, after compression, to Gazprom (the Russian gas production and transmission concern).

4. Purneftegas is currently responsible for the operation of approximately 20 oil fields in the Pur region. Twelve of these oil fields have been placed on production with the first field (Novo-Purpeyskoye) commencing production in 1985. It is planned to place the remaining 8 fields on production at various times through the year 1995. There are approximately thirty additional fields which are projected to be placed on production after 1995 ,however, these fields are not included in this study. A list of the fields to be considered in this study is presented in Attachment I of this document.

5. Ruhrgas, a major gas company in Germany, is a potential investor in the project. As a first step, a Working Group has recently been formed consisting of Ruhrgas and the three potential Russian partners; "Purneftegas, Sibneftegazpererabotka, and Gazprom". The task of the Working Group is to conduct further investment studies utilizing the resources and forecasts provided from the previous resources certification study.

<u>OBJECTIVE: Financial Analyses of Purneftegas and its Operations</u>

6. A study of the associated gas and condensate forecasts was performed to certify these resources. The presently producing fields were investigated and also each new major field to be placed on production through the year 1995. Economic assessments should be made for each of the 20 fields on production or to be placed on production through the year 1995. Furthermore, a financial assessment of Purneftegas is required along with its ability to fund future investments necessary to provide the needed associated gas streams to serve as feed supply to the Gas Processing Plants.

1648

7. The above financial analyses would be carried out by a financial consultant or firm of international reputation acceptable to the various lending institutions and investors providing the finance for the Russia - Environmental and Gas Utilization Investment Project. This consultant would bring to bear its considerable international experience and expertise in project financing and economic assesssments.

8. The financing of this study is expected to be jointly shared by Ruhrgas (50%) and the Russian partners (50%) in the working group.

SCOPE OF WORK

9. This project will review the financial viability of Purneftegas and its ability to provide the required investment over a twenty year period to sustain an associated gas production, that would justify the economics of downstream processing facilities. The contractor will further examine the economic feasibility of various investment packages and prepare twenty year cash flow projections for Purneftegas's operations. In addition the contractor will ascertain the availability of the financial arrangements necessary.

10. There are a number of uncertainties associated with the future development of the oil fields operated by Purneftegas in the Pur region of Western Siberia. The consultant will be required to assess the economic viability of several different oil field development scenarios resulting in different associated gas production forecasts. These developments as provided from a reserves certification study will range from 1) a base case where all future developments are carried out using the current production practices (i.e. present waterflood operations, continued production of excess associated gas etc.), and 2) an optimum case for oil production and gas utilization or conservation. Finally based on technical risk analysis, a most likely case will be provided which is a mixture of the current production practices and the latest reservoir management practices. Economic analysis of each scenario is to be performed. Associated gas will be considered up to the point of the field separators where the gas is transferred to the gas gathering system for the gas processing plant(s).

11. There are twelve fields presently on production under the operation of Purneftegas. Eight additional fields are planned for development through 1995. Three major oil fields currently on production are Tarasovskoye, Komsomolskoye, and Severo-Kharampurskoye. Two additional oil fields are to be brought on production in the near future, namely Yuzhno-Kharampurskoye and Severo-Gubkinskoye. These five fields result in approximately 80 percent of the projected associated gas being covered in this study. The consultant is to prepare a detailed economic analysis of each of these five fields. A brief description of these fields is listed on Attachments 2A through 2E. The consultant will also perform economic assessments on the remaining fifteen fields. A gas condensate reservoir will also require review and economic analysis by the consultant.

1549

FINANCIAL ANALYSIS

13. This study will assess the financial results generated by the combined economic assessment of all Purneftegas operated fields, and the overall, long term financial viability of Purneftegas. In particular, working with the staff and management of Purneftegas, the consultant will prepare to the extent feasible, detailed income statements, balance sheets, and source and application of funds statements. These financial statements should present Purneftegas' financial results for the preceding three years, (1991 to 1993) and forecasts for a twenty year period. The financial projections should be prepared so that the impact of the proposed Russia-Environmental Investment Project can clearly be distinguished from Purneftegas' ongoing operations. The consultant should also prepare detailed income, balance sheets, and flow of fund statements for the project itself, paying special attention to the costs of essential inputs from them, debt servicing requirements, and revenues generated from the sale of wet gas to the gas processing project. The wet gas price into the processing plant will be obtained from the Bechtel Interim Feasibility Study.The financial analysis should be prepared on the basis of both prevailing local prices for inputs and outputs, as well as on the prevailing world market prices.

1660

Procedure

1. Phase I

   Collect and review available financial data, detailed income statements, balance sheets and source and application of funds statements. Some information and analysis is available from the World Bank. Capital and expense data on each field will be provided from the Resource Certification Study and should be reviewed and supplemented as necessary.

2. Phase II

   Perform an economic analysis of the development plan based on forecasts 1) under current production practices and 2) utilising the latest reservoir management techniques as provided from the Resources Certification Study.

   a. Review facility designs where necessary for each alternative and review estimated capital and operating costs from Certification Study and other relevant studies.

   b. Prepare cash flow analysis of each alternative including appropriate taxation and transportation costs. Perform sensitivity analysis to fluctuations in recovery, rate of recovery, oil and gas pricing, investment costs, transportation costs.

   c. Select optimum plan of depletion based on economic analysis.

3. Phase III

   Submit results of study

   a. Prepare detailed report and present to client.

   b. Provide any computer files and other materials to client.

TIMING

Any time constraints would need to be specified. These, in turn, may affect what truly can be accomplished with respect to the Scope of Work. Phases I - III represent approximately 2-4 months of effort. This, however, could be impacted by the time for meetings and approvals by the clients. As you are aware, communication difficulties can significantly slow down the expected pace of a project.

The bidder on the project is expected to submit a critical path diagram showing the project schedule.

RESOURCES

An organization chart is to be submitted showing the manner in which the project would be staffed. Curriculum vitae are to be furnished for each member of the team. Information on the overall resources of the company (e.g.: type of software programs available, etc.).

OTHER INFORMATION

The bidder is asked to provide background on his company and a description of other work which he has performed similar to the proposed project and specifically identify any Russian experience to date.

REVIEW MEETINGS

15. The contractor will have two review meetings:

i) First meeting will be held in Moscow after the collection and the analysis of the data (Phase I) by the contractor to ensure that the essential data has been obtained to complete the tasks, and to identify the methods to be used in the study. Following the review, the approval of the Working Group must be obtained before proceeding to the next phase.

ii) The final review meeting will be held in Moscow to present the final results, following the completion of the final draft report.

1662

ATTACHMENT 1

TABLE OF OPERATED OIL FIELDS

1.	Novo-Purpeyskoye	1985
2.	Barsukovskoye	1986
3.	***Tarasovskoye**	**1986**
4.	Verkhne - Purpeyskoye	1987
5.	***Komsomolskoye**	**1988**
6.	***Kharampurskoye**	**1990**
7.	Ust-Kharampurskoye	1990
8.	Zapadno - Purpeyskoye	1995
9.	Severo - Tarasovskoye	1992
10.	Gubkinskoye	1992
11.	Prisklonovoye	1993
12.	***Yuzhno - Kharampurskoye**	**1994**
13.	Izvestinskoye	1993
14.	***Severo - Gubkinskoye**	**1993**
15.	Severo - Komsomolskoye	1994
16.	Severo - Aivasedopurovskoye	1994
17.	Festivalnoye	1995
18.	Vostochno - Tarkosalinskoye	1995
19.	Zapadno - Tarkosalinskoye	1995
20	Meretoyakhinskoye	1995

* Fields to be studied in detail.

1L53

Tarasovskoye

Discovery date	1975
Location:	45 Kms from Tarko-Sale

Remaining Recoverable Reserves

Oil	131 Million Tonnes
Associated Gas	
Gas cap	18 BCM
Solution	22 BCM

Major Oil Horizon Parameters

Zone	B10-B11
Area	22325.5 hectares
Reserves	47.8 Million Tonnes
Density	0.82 oil
Temperature	80 deg C
Depth	2498 meters

Major Gas Cap

Zone	B10-B11
Gas Reserves	18 BCM
Depth	2498 meters

Production History

Start	1986
1992 Oil Prod.	4705 Thousand Tonnes
Water Cut	21 %
1992 Water Inj.	18540 Thousand Cubic Meters
Cum Oil To 1-1-93	28232 Thousand Tonnes
Oil Producers	842 wells (600 active)
Water Injectors	296 wells (188 active)
Gas Lift	309 wells

1564

Komsomolskoye

Discovery date	1966
Location:	105 Kms from Tarko-Sale

Remaining Recoverable Reserves

Oil	121 Million Tonnes
Associated Gas	
Gas cap	22.4 BCM
Solution	8.9 BCM

Major Oil Horizon Parameters

Zone	B6
Area	5609.0 hectares
Reserves	44.9 Million Tonnes
Density	0.843
Temperature	70 deg C
Depth	2308 meters

Major Gas Cap

Zone	B6
Gas Reserves	4.7 BCM
Depth	2300 meters

Production History

Start	1988
1992 Oil Prod.	381 Thousand Tonnes
Water Cut	24 %
1992 Water Inj.	1388 Thousand Cubic Meters
Cum Oil To 1-1-93	1728 Thousand Tonnes
Oil Producers	181 wells (155 active)
Water Injectors	9 wells (8 active)
Gas Lift	120 wells

1566

Kharampurskoye

Discovery date	1979
Location:	120 Kms from Tarko-Sale

Remaining Recoverable Reserves

Oil	99 Million Tonnes
Associated Gas	
Gas cap	2.1 BCM
Solution	23.5 BCM

Major Oil Horizon Parameters

Zone	H1
Area	19975.0 hectares
Reserves	35.6 Million Tonnes
Density	0.819 oil
Temperature	85 deg C
Depth	2847 meters

Major Gas Cap

Zone	K16
Gas Reserves	2.1 BCM
Specific Gravity	0.567
Depth	1728 meters

Production History

Start	1990
1992 Oil Prod.	423.8 Thousand Tonnes
Water Cut	5 %
1992 Water Inj.	634 Thousand Cubic Meters
Cum Oil To 1-1-93	728 Thousand Tonnes
Oil Producers	25 wells (23 active)
Water Injectors	5 wells (4 active)

1666

ATTACHMENT 2E

Yuzhno-Kharampurskoye

Discovery date	1979
Location:	120 Kms from Tarko-Sale

Remaining Recoverable Reserves

Oil	69 Million Tonnes
Associated Gas	
Gas cap	1.6 BCM
Solution	23 BCM

Major Gas Cap

Zone	B6
Gas Reserves	4.7 BCM
Depth	2300 meters

Production History

Start	1988
1992 Oil Prod.	381 Thousand Tonnes
Water Cut	24 %
1992 Water Inj.	1388 Thousand Cubic Meters
Cum Oil To 1-1-93	1728 Thousand Tonnes
Oil Producers	181 wells (155 active)
Water Injectors	9 wells (8 active)
Gas Lift	120 wells

Severo-Gubkinskoye

Discovery date	1980
Location:	60 Kms from Tarko-Sale

Remaining Recoverable Reserves

Oil	28.1 Million Tonnes
Associated Gas	
Gas cap	37.4 BCM
Solution	4.4 BCM

Major Oil Horizon Parameters

Zone	B8	B10
Area	2032.0	2998.0 hectares
Reserves	13.6	9.5 Million Tonnes
Density	0.831	0.832 grams per cub.centimetres
Temperature	71	71 deg C
Depth	2130	2470 meters

Major Gas Cap

Zone	B7	B10
Gas Reserves	20.7	14.7 BCM
Depth	2265	2410 meters

Production History

Start	1993	
1992 Oil Prod.	n.a.	Thousand Tonnes
Water Cut	n.a.	
1992 Water Inj.	n.a.	Thousand Cubic Meters
Cum Oil To 1-1-93	n.a.	Thousand Tonnes
Oil Producers	n.a.	wells (n.a.)
Water Injectors	n.a.	wells (n.a. active)

1658

Attachment 3
November 2, 1993

Moscow 2-11-93

Report of the Resource Group to the Working Group

As a result of its meeting on Nov.1 and 2 in Moscow the Resource Group consisting of Messrs. K. H. Crowther (World Bank consultant), R. J. O'Brien (Bechtel), H. Lübben and A. Gebauer (Ruhrgas), R. I. Kuzovatkin (SibNIINP, part-time), and L. I. Morozov and A. S. Filin (Petro-Russ, for SNGP, part-time) presents the following report.

1) The Resource Group has drafted the

Terms of Reference (TOR) Certification of Oil and Gas Reserves and Production Forecasts of the Associated Gas in the Pur Region of Western Siberia,

which are attached to this report. This TOR will be distributed in the bidding procedure to the suitable Reservoir Engineering Contractors selected under item 4. With the consent of Ruhrgas, the Resource Group suggests that the recent study prepared by SibNIINP for Ruhrgas be made available to the successful bidder.

Approval of the TOR by the Working Group is requested at its earliest convenience.

2) The Resource Group proposes the appointment of a Chairman of the Resource Group to orderly facilitate further work. It is proposed

Mr. A. A. Lee (Purneftegas)

takes this position. It is further proposed

Mr. H. Lübben (Ruhrgas)

acts as his deputy chairman.

Members of the Resource Group are also

Mrs. T.S. Pipa (NIPIGaspererabotka)
Mr. K. H. Crowther (World Bank)
Mr. V.M. Revenko (SibNIINP)
Mr. L.I. Morosov (SNGP)
Mr. N.N. (Gasprom)

1569

Unless no other location is preferred Ruhrgas invites the Resource Group to hold their meetings in Ruhrgas' office in Moscow.

Approval of these appointments by the Working Group is requested at its earliest convenience.

3) The Resource Group feels strongly that full availability of data for the Reservoir Engineering Study has to be guaranteed by Purneftegas on a no-cost basis. Purneftegas should also facilitate access to and availability of data which are needed for the study and which may be stored in the files of other organizations.

   Purneftegas is asked to supply the Resource Group with all existing relevant studies of Russian (SibNIINP, Petro-Russ, etc.) and foreign (BP, CONOCO, Benton, etc.) expert organizations. The availability of these studies will save time and cost.

   The Resource Group is of the opinion that the bidding procedure can only commence when the availibility of the aforementioned data has been assured.

4) The World Bank and Ruhrgas will prepare the letter requesting bids for the Certification of Oil and Gas Reserves, and Production Forecasts of Associated Gas Study from the following short list of reputable international consultants which have been selected by the Resource Group.

   - DeGolyer & McNaughton (USA)
   - Gaffney, Cline & Associates (UK, USA, Canada)
   - Franlab (France)
   - Intera (USA, Canada, UK)
   - Scientific Software (USA, Canada, UK)
   - Simon ERC (UK).

   It is intented to follow the bid procedures currently employed by the World Bank. Once the confirmation of the funding of phases I and II of the TOR is assured requests for bids will be submitted.

5) We are investigating the sources of Russian firms providing expertise in the field of oil and gas assessment. The bid document will include a suggested list of such firms. The potential contractor will be encouraged to use these services at his discretion.

6) A preliminary time schedule for the project is attached to this report.

Attachments

1560

Draft 04-Nov-93

Pur Region, Oil & Gas Certification Study

Critical Time Path

Estimate Of Time Table For The Study Process

Approvals:
- Purneftegas
- Sibneftegaspererabotka
- Gasprom
- Ruhrgas
- World Bank

Task Description	Responsibility	11-93	12-93	01-94	02-94	03-94	04-94	05-94	06-94	07-94	08-94	Sept-94	10-94	11-94	12-94	01-95	02-95	03-95
Preparation of draft TOR (Technical and Financial)	Resource Group																	
Approval of Tech and Financial TOR - Resource Group	Resource Group																	
Approval of TOR's-Working Group and World Bank	Working Group																	
Prepare short list of technical contractors	Resource Group																	
Short list agreement-Resource group and Working Group	Working Group																	
Bechtel report	Bechtel/WB																	
Signing of consortium agreement	Working Group																	
Confirmation of Japan Grant Funding (JGF)	World Bank																	
Ruhrgas commitment of financing of reservoir study	Ruhrgas																	
Confirmation of cost and availibility of data and JV studies	PNG																	
Invitation to bid for technical contractors	Resource Group																	
Bidders meeting in Russia	Resource Group																	
Receipt of bids from contractors	Resource Group																	
Evaluation and selection of contractors	Resource Group																	
Negotiate contract	Resource Group																	
Preparation of the Reservoir Engineering Study	Contractor																	
Contractor meeting after contractor gathers information (Phase I & II)	Contractor																	
Consortium approves continuation of study	Consortium																	
Contractor meeting after completion of technical study (Phase VI)	Contractor																	
Approval of Financial TOR-Working Group and World Bank	Consortium																	
Prepare short list of financial contractors	Consortium																	
Short list agreement-Working	Consortium																	
Invitation to bid	Consortium																	
Receipt of bids from contractors	Consortium																	
Evaluation and selection of contractors	Consortium																	
Negotiate contract	Consortium																	
Commencement of the Financial Report	Contractor																	
Final results of Financial Report	Contractor																	

Attachment 4

November 3, 1993

Mr. A.A. Lee, Deputy General Director by Geology
Purneftegas Production Association
626729 Tyumen Province, Purovsky Region
Gubinsky Town
Russia

Dear Mr. Lee

Re: Russia-Environmental And Gas Utilization Project

The Resource Group of the Associated Gas Project has met during the last week in Moscow. Unfortunately you could not attend the meetings and therefore we felt it appropriate to inform you of the progress of the group.

In absence we recommended to the Working Group that you be appointed as Chairman of the Resource Group. It is hoped you will accept this and I look forward to working with you on this project in good spirit.

Please find attached to this letter, copies of the documents prepared and delivered to the working group. A brief summary of the important matters addressed over the last week is presented below:

1) Approval of the Technical Terms of Reference (TOR) for the Engineering Study by the Working Group.

2) Assurance of the necessary funds for the Study by the World Bank and Ruhrgas.

3) Assurance of data availability by Purneftegas. As this item is of major importance we would appreciate your response to our request as soon as possible.

4) Preparation of letters regarding contractors to bid for the Reservoir Study. The World Bank will draft a letter and circulate it through Purneftegas and Ruhrgas for their respective approval. It is planned to have this letter sent out by January, 1994.

1562

5) Meeting of the Resource Group at your convience (tentatively November 18, 1993 in the afternoon in Ruhrgas's offices in Moscow) to address the following items:

i) Obtain final agreement by the group of the TOR
ii) Obtain final agreement on contractors short list (International & Russian)
iii) Review financial TOR
iv) Review preliminary time schedule
v) Prepare a preliminary budget for this study
vi) Determine the availabilty and costs of data required for the study

I would be happy to have your comments on this letter at your earliest convenience either by telephone, letter, or fax to:

Mr. Alfred Gebauer
c/o Ruhrgas AG
Huttropstrasse 60
D-45138 Essen
Germany

Telephone 49-201-1843212
Fax: 49-201-1843715

You have met Mr. Alfred Gebauer on the 29th of October at the Penta Hotel. As you are aware Mr.Gebauer speaks Russian and therefore he can comunicate with you by phone.

Yours Very Truly

H. Lübben

Dr. H. Lübben

1563

Attachment 5

To: Moscow Expats
From: Smith Bobbitt

27th October 1993

Re: Tarasov Project Charter

The BP/Statoil Alliance is now operating a charter every-other-week to support our operations in West Siberia. In general, this charter will have excess capacity for passengers and/or freight, which should be available for our use. However, as the cost of this charter is being borne ultimately by the Russian Federation, I would personally like to keep close control over our usage.

Therefore, if you would like to use the charter for any reason, please contact me. (Gess in my absence.)

We use Sheremetyevo 1 in Moscow, and Stansted in London. The next flight will be 2nd/3rd November. A very rough flight programme (+/- 2 hours) is outlined below.

Departing		Arriving	
Moscow	**Tue 13h00**	London	**Tue 14h00**
London	**Tue 18h00**	Moscow	**Wed01h00**
Moscow	**Wed02h00**	Noyabr'sk	**Wed08h00**
Noyabr'sk	**Wed10h00**	Moscow	**Wed12h00**

1564

IV. AIDE MEMOIRE
THE WORLD BANK

ANNEX I

RUSSIA - ENVIRONMENTAL INVESTMENT PROJECT

PURNEFTEGAS ASSOCIATED GAS RECOVERY PROGRAM

AIDE MEMOIRE - MEETING OF PROJECT SPONSORS

Houston, Sept. 1-2, 1993

1. At the request of the Government of Russia and the World Bank, a meeting was held in Houston September 1/2, 1993 to discuss progress on project preparation and on cooperation among the interested commercial parties (Gazprom, Purneftegas, Ruhrgas and Sibneftegazpererabotka), the Ministry of Fuel and Energy, consultants Bechtel, the World Bank and the International Finance Corporation. The European Bank for Reconstruction and Development, which has expressed interest in financing the project, requested that it be informed of the outcome of the meeting. A list of those attending the meeting is attached as Attachment 1.

2. The objective of the project and its current status was outlined in the July Aide Memoire of the World Bank: to prepare and implement a project that would have major environmental benefits and be financially self-sustainable. The Houston meeting was the first at which all the commercial parties were in attendance. The purpose of the meeting was to: (a) begin a process by the commercial parties of working together, in consultation with the Ministry of Fuel and Energy and with potential donors as appropriate, to advance the preparation and implementation of the project as quickly as possible; (b) determine the progress of feasibility work by Bechtel and the commercial parties; and (c) establish a program of technical, financial, economic, legal and institutional work that would result in a financially self-sustainable environmental investment project supported by the Russian Government and the commercial parties.

3. The World Bank welcomes the decision of PNG, SNGP, GasProm and Ruhrgas to form a working group to establish a consortium to advance preparation of a possible joint venture to implement this First Environmental Investment Project in Russia. The World Bank intends to cooperate closely with the working group and, eventually, with the consortium. The World Bank understands that the Russian Government and the Russian partners of the working group may approach the World Bank to assist in the funding of the Russian part of the studies and other appropriate activities of the consortium. The International Finance Corporation (IFC) is interested in acting as financial advisor to Ruhrgas or to the joint venture production and marketing companies to assist, inter alia, in the design of a financial structure, contractual and legal framework, as well as a security package. IFC would also consider providing debt and possibly equity financing to the company for its own account and would seek to attract commercial bank financing from other sources including bilateral and export credit agencies.

Bechtel Feasibility Study

4. The data so far provided to the World Bank, Ruhrgas and Bechtel on the projected associated gas production rates in the Pur region are not sufficiently detailed or reliable to be used as a basis for justifying commitments to major investments in facilities to recover and process the gas at this juncture (Attachment 4). It was, therefore, agreed that the Bechtel feasibility study should be an interim one pending the results of the proposed detailed audit of the resource data and possible confirmation and upgrading of the associated gas production estimates. Representatives of the Russian institutions indicated that substantial supplementary data are available and would be given to the consultants. Representatives of Purneftegaz, SIBNIINP, Ruhrgas and World Bank intend to meet in the near future to work on the reserves and production forecast corroboration (Attachment 4).

5. The resource data for the interim feasibility study would be based on the preliminary field-by-field analysis carried out by Ruhrgas for oil fields projected to be brought on stream by 1995. Bechtel would consider the following two options for the proposed project scope:

BEST AVAILABLE COPY

(a) Option 1: to collect and process 4 BCM/yr of associated gas in the Pur region, including completion of the 2 BCM/yr Gupkinsky gas processing plant (GPP); and

(b) Option 2: to collect and process 6 BCM/yr of associated gas in the Pur region, also including completion of the Gupkinsky plant, but as a two phased investment.

6. The objective would be to determine the sensitivity of the economics of the project to changes in project scale. For each of these options, Bechtel would optimize the collection of gas from the various fields according to the projected variations in the production of associated gas, as well as considering the possible need for exploiting gas condensate resources in the region to make up for projected deficiencies in associated gas to feed the GPPs. A 20-year project life cycle would be assumed for the feasibility analysis. Only two GPP site locations would be evaluated in this interim study: Gupkinsky and Tarasovsky.

7. The interim feasibility study will consider all options for the transport of natural gas liquids (NGLs) from the project, including the cost of completing the NGL gathering pipeline from Gupkinsky to South Balyk. However, the funding for completion of the pipeline would not be included in the economic analysis as an investment charge to the proposed Joint Venture (JV) Production Company. The JV would pay a cost plus tariff to Sibneftegazpererabotka as a transit charge and estimate of this charge would be included in the economic analysis of the JV.

8. For purposes of the financial analysis to be included in the study: (a) projected international inflation rates would be based on the World Bank's latest projection, which are currently estimated at an average of 2.8 percent p.a. until the year 2000; (b) a sensitivity analysis would be performed to assess the minimum levels of prices required for different facets of the gas chain to yield a financial rate of return (FRR) of no less than 12 percent (in real terms), including the projected prices for wet gas at the GPP plant gate; ex-GPP plant dry gas, and transmission to the marketing company.

9. Although it has not yet been agreed that the proposed consortium working group will take over responsibility for directing the feasibility work of Bechtel Corporation from the World Bank and for finalizing the design basis and approach to be taken in carrying out the study, further discussions within the group and between the group, the World Bank and Bechtel should clarify the linkages between the ongoing interim feasibility and the Working Group's activities in the near future.

Financial Issues

10. For purposes of this Aide Memoire, the mission has assumed that the total project cost would be approximately $1 billion. A reasonable indicative financing plan for this project cost would be as follows:

Equity. Equity investors would finance 30% of the total project cost, or $300 million. Ruhrgas would provide a cash equity contribution of $150 million. The Russian partners would tentatively provide $75 million of cash and approximately $75 million of equipment in the form of the existing gas processing plant and gathering facilities. International financial institutions such as the World Bank, EBRD, or other lenders could help the Russian partners finance their required cash equity contribution.

Loans. The following potential sources of term loans might be interested in financing the project:

IFC: Might be interested in organizing a $150 million loan package consisting of a $50 million loan for its own account and $100 million package of syndicated loans from private commercial banks.

EBRD and Export Credit Agencies: Might be interested in providing a $250 million package

1667

BEST AVAILABLE COPY

of loans consisting of suppliers credits from export credit agencies and loan from the EBRD.

World Bank: Willing to consider a loan and/or contractual compliance guarantee equivalent to $300 million. Special effort would be made to coordinate the enhancement offered by the IFC under its syndication procedures with the enhancements offered by the contractual compliance guarantee.

Gas Export/Transmission

11. The processed gas from the Purneftegas fields designated for export to Germany under the project will have to pass through existing pipeline transmission systems which may need some increase in capacity. It is assumed that the transit route from Russia will be via Ukraine, Slovakia and the Czech Republic to the German border. It needs to be determined if investments will be required to augment transmission capacity in each of the countries. Parallel projects in these countries may be needed. The World Bank is in dialogue with Gazprom and the gas companies concerned in the transit countries. It is prepared to consider financial support for gas transmission investments in each of the countries if this is needed and requested by the countries concerned. Once the export route for natural gas liquids produced under the project is determined, related investments and their financing will need to be considered.

Evaluation of Bechtel's Performance

12. The common consensus of Bechtel's performance to date and especially in Houston by the Russian partners, Ministry of Fuel and Energy, Ruhrgas and the World Bank is that of poor management poor technical input. The World Bank mission leaders brought these concerns directly to the management of Bechtel in Houston, but there seemed to be little response. The Russian partners and Ministry of Fuel and Energy have requested that the World Bank write a letter outlining these concerns to USAID and to the top management of Bechtel, requesting replacement of the current team with a top performing Project Manager and a fully qualified, experienced technical team that can meet the high standards promised by Bechtel and expected by all the participants in this project. The World Bank mission agreed to draft such a response as a matter of top priority.

Role, Responsibilities and Functions of the Working Group

13. It became clear during the latter part of the Houston meeting that there was a lot of confusion in the minds of the Russian partners as to the role and responsibilities of the Working Group. This confusion was expressed more clearly to the World Bank in subsequent follow-up meetings in Washington. The Russian partners reconfirmed their commitment to the principles of cooperation agreed to in the jointly signed Agreement Letter of September 1, 1993. It was, therefore, agreed that the World Bank would prepare a draft outline of a working paper on the "Role, Responsibilities and Functions of the Working Group", which would be translated into Russian and presented to all of the parties to the Agreement before the September 14 and 15, 1993 meeting of the Working Group in Moscow.

Independent Financial, Commercial, and Legal Advice for Russian Partners and/or the JV

14. At follow up meetings in Washington with the Russian Partners, a major concern that was raised with the World Bank Mission was their lack of experience in international financial, commercial and legal matters relating to the formation of Joint Ventures with foreign partners. The mission indicated that it had already prepared a Terms of Reference (TOR) for an Independent Financial Advisor to the Russian Partners (or to the Consortium), which could be an international firm or a joint venture between an international firm and a local partner. The possibility of IFC acting as the Financial Advisor to all of the joint venture partners or to Ruhrgas alone (if requested by them) was left open for further deliberation by the Working Group. In any case, the draft TOR could be modified to suit the particular purpose agreed to by the partners. The World Bank mission agreed to have the

BEST AVAILABLE COPY

1568

draft TOR translated into Russian and provided to the parties before the September 14 and 15 meeting of the Working Group. If requested by the partners, the World Bank agreed to seek suitable funding sources for financing the services of Independent Financial Advisor.

Independent Audit of the Associated Gas Resource Projections

15. It was agreed at the Houston meeting for a Reservoir Engineering Working Group to meet in Moscow on October 4 and 5, 1993 to work on the Terms of Reference for "Resource and Forecast Corroboration". Since this corroboration is on the critical path for project preparation, an alternative approach was put forward at subsequent meetings in Washington to speed up the process. It was suggested that rather than meet to discuss a TOR the parties to this Working Group should start immediately on an independent audit of the data and assumptions used by SIBNIIP in deriving the latest associated gas resource profiles that have been provided to Bechtel. If necessary, the proposed Reservoir Engineering Group could be expanded with additional experts provided by the World Bank and Bechtel.

16. The Group could start work according to a pre-agreed TOR and schedule on October 4 in Western Siberia and continue for three to four weeks through to the end of October. During this time, visits would be arranged to selected institutes involved in data collection and forecasting for the Purneftegas operations as well as to oil producing fields in the Pur region to validate data collection methods currently in use. The BP well work over operations at the Tarasovsky oil field could also be included in this schedule. The World Bank preparation mission from October 17 to 31, 1993 could overlap with the work of this group from October 18 to 22 in Gupkinsky. At the end of the 3 to 4 weeks, the Reservoir Engineering Working Group would report its findings to the full Working Group and in particular would focus on validating resources for a 4 BMC/yr first phase operation. The World Bank agreed to prepare a draft TOR for the Russian Engineering Group Audit and to send copies of the Russian translated and English versions to the Working Group Partners in time for the September 14 and 15 1993 meeting. It is also suggested that the Full Working Group also arrange a meeting for the last week of October 1993 to review the findings of the Reservoir Engineering Group, as well as those of the World Bank mission.

Next Steps

A. Immediate

a. Working Group to meet to define working arrangements, including: staffing of a secretariat and director(s) to take lead responsibility; steps towards consortium agreement; linkages between Bechtel interim feasibility study and Working Group activities; and program for project preparation. Sept.14/93

b. Resource team to meet for collection and verification of resource data. Oct.4/93

c. World Bank, USAID, Working Group and Bechtel to confirm TOR and design basis for feasibility study. MidOct./93

B. Following Steps

Once the forgoing steps are completed, a plan for further project preparation, including responsibilities and a schedule, will have to include the following:

* Define and decide on structure and ownership of production joint venture and marketing joint venture companies.

1669 * Define and decide on proposed government policy conditions for project, e.g. taxation,

BEST AVAILABLE COPY

duties, export licenses, etc.

- Agree on pipeline and other transportation tariffs for natural gas and NGLs.
- Determine long term contractual arrangements for natural gas, and NGL exports including sales contracts, transit agreements, etc.
- Retain financial advisor and determine financing strategy.

BEST AVAILABLE COPY

1570

Attachment 1

ATTENDANCE LIST

NAME	POSITION	COMPANY	CONTACT TELEPHONE
Morozov Lev	Professor, Chief of Oil and Gas Department YUGORSKY Joint-Stock Bank Head of Dept.	PETRO-RUSS YUGORSKY Joint-Stock Bank	252-7150 252-7571 Moscow, Russia 252-7150 252-7571 Moscow, Russia
Chugunov Dimitry	Joint-Stock Bank YUGORSKY Consultant TSC Financial Industry Group "PETRO-RUSS" Executive Director	Joint-Stock Bank YUGORSKY TSC"FIG "PETRO-RUSS"	Moscow, Russia 095-252-7363 095-252-7571 FAX: 095-254-6511
Dostoinov Ilia	President Prospect, Ltd.	Prospect, Ltd. Moscow	095-938-1980 FAX: 956-1131 TLX: 412235
Korsakov Nikolai	Director	Nipigazperera Botka. Research and Design in Gaz Processing	Kzasnodaz 8612-55-7611 FAX: 8612-55-8552
Vinogradova Svetlana	Chief Specialist	Ministry of Fuel and Energy	Moskow, Russia 095-239-8693
Martin Urban	Department Head	Pipeline Engineering	0201-3205-420
Zenda Kuo	Associate	Bechtel Financing	415-768-4952

1571

NAME	POSITION	COMPANY	CONTACT TELEPHONE
Pipa Tatyana	Chief of Department	Nipgazpezeza Botka Research and Design in Gas Processing	Krasnodar 8612-5740-23 FAX: 8612-5585-52
Toumasiev Nikolay	Deputy General Director	Sibneftegaz Pererabotka	Nijrevartask 83456-2355-36 8095-2208-186
Konytchenko Vladimir	Deputy Chief Engineer	Sibneftegaz pererabotka	Nijnevartovsk 83456-2352-59
Ken Crowther	Vice-President Engineering	Sproule Associate Ltd. (Consultant-World Bank)	Calgary, Canada 403-269-7951
Vadim Voronin	Energy and Environment Specialist	World Bank Moscow Office	Moscow 7095-254-2656 FAX: 7095-254-8368
Vitaly Stepaniuk	Deputy Director of the Department	Raogazprom	7095-133-6630
Victor Ageev	Director General	PA "Purneftegaz"	
Selina Shum	Sr. Financial Analyst	World Bank	202-458-2452
Harrold Wackman	Division Chief	World Bank	
Ulrich Schoeler	Vice President	Ruhrgas	49201-184-3823
Rolf Beyer	Executive Board Member	Ruhrgas	49201-184-3347
Irene Commebmann	Section Manager	Ruhrgas	49201-184-3347
Heino Lubben	Consultant	Ruhrgas	495-085-7607
Gerhard Hollemann	Head of Seciton	Ruhrgas	43201-184-4398
Heinrich Lennartz	Head of Section Northern Ruhrgas Grid	Ruhrgas	49201-184-4810
Paul D. Baribeau	Investment Officer	International Finance Corp.	Washington, DC 202-473-9239 FAX: 202-334-0230

NAME	POSITION	COMPANY	CONTACT TELEPHONE
Dirk Kleyweg	Geologist	International Finance Corp.	FAX: 202-334-0230
Kurt Loos	Sr. Investment Officer	International Finance Corp.	FAX: 202-334-0230
Alfred Watkins	Sr. Economist	World Bank	202-473-7277
Robert J. O'Brien	Director Petro. Service ETIP (Bechtel)	Bechtel	703-528-4488
Edward J. Swain	Acting Study Manager	Bechtel	713-235-2211
Kamil F. Rustam		Bechtel	713-235-2296
Vadim Voronin	Environmental Specialist	World Bank	Moscow 7095-254-2656 FAX: 7095-254-8368

Attachment 2

СОГЛАШЕНИЕ

о процедуре дальнейшей разработки проекта "Использование нефтяного газа в районе деятельности Пурнефтегаза"

С 1992 г. "Пурнефтегаз", "Сибнефтегазпереработка", "Газпром" и "Рургаз" совместно с другими российскими партнерами интенсивно занимались разработкой проекта использования нефтяного газа в районе деятельности Пурнефтегаза.

Данные разработки пока еще не завершены, что не позволяет партнерам принять окончательное решение о реализуемости проекта. При этом полученные к настоящему времени результаты дают основание для дальнейшей совместной работы над проектом, который является составной частью Программы Российской Федерации ускоренного привлечения и использования займов Всемирного Банка на 1993 - 1994 гг., одобренного постановлением Правительства N 603 от 26.06.93.

Во исполнение данного Постановления Министерство топлива и энергетики своим письмом (июль 1993 г.) предложило "Пурнефтегазу", "Сибнефтегазпереработке" и "Газпрому" в тесном взаимодействии друг с другом проработать вопросы сотрудничества с "Рургазом" по этому проекту, для которого запрошена финансовая поддержка Всемирного банка и из других источников международного финансирования.

"Пурнефтегаз", "Сибнефтегазпереработка", "Газпром" и "Рургаз" договариваются о следующей процедуре действий:

1) Продолжить совместную работу над проектом и создать Консорциум для разработки ТЭО.

2) В задачи Консорциума входит:

   - проведение интенсивной работы над проектом с целью разработки технико-экономического обоснования и подготовка к созданию совместного предприятия по использованию нефтяного газа. В этой работе должны быть использованы материалы, разрабатываемые фирмой "Бехтель" для Всемирного банка.

   - Другие вопросы, связанные с дальнейшей совместной деятельностью.

3) В возможно короткие сроки разработать соглашение о создании Консорциума. С этой целью создает рабочую группу, в которой участники будут представлены следующим образом:

1574

- "Пурнефтегаз" в лице: г-на В. Агеева
- "Сибнефтегазпереработка" в лице: г-на В. Канюченко
- "Газпром" в лице: x
- "Рургаз" в лице: д-ра У. Шёпера

4) Рабочей группе предлагается провести необходимые консультации с Министерством топлива и энергетики и организациями - возможными источниками международного финансирования по вопросам, касающимся создаваемого Консорциума.

5) Пригласить администрацию Ямало - Ненецкого автономного округа назначить своего представителя, а Министерство топлива и энергетики - своего наблюдателя в состав данной рабочей группы.

Со стороны "Пурнефтегаза"

В. Агеев

Со стороны "Сибнефтегазпереработки"

Н. Тумасьев

Со стороны "Газпрома"

В. Степанюк

Со стороны "Рургаза"

Р. Байер У. Шеллер

1 сентября 1993 г.
г. Хьюстон, США

x Конкретное лицо будет назначено в течение ближайших десяти дней.

1576

Attachment 3

September 2, 1993

Mr. V. G. Ageev
Mr. V. M. Revenko
The Reservoir Engineering Group

i.e. Mr. Heino Lubben, Ruhrgas
Mr. Ken Crowther, World Bank
Mr. A. A. Li, Pureneftegaz
Mr. V. M. Revenko, SIBNIINP

Would like to meet in Moscow on 4.10.93 in the Ruhrgas Office to work on the Terms of Reference, Reserves and Forecast Corroboration, which have been spelled in the meetings in Houston and which are attached to the World Bank Aid@Memoire.

The meeting is expected to be finalized on 5.10.93 in the afternoon.

H. Lübben

H. Lubben

1676

A World Bank mission is planned to follow up on these matters in Russia approximately mid-October.

ATTACHMENT 4

Aide Memoire
Terms of Reference, Reserves and Forecast Corroboration

The forecast of associated gas by SIBNIINP was received without reservoir and production statistics support data. The forecast was based on current production practices which include production of excess gas. Gas break-through was factored into the predictions based on local experience making these predictions empirical in nature. At this time, lack of adequate reservoir fluid characteristics data for pressure-production predictions makes any forecast highly uncertain.

In order to recommend proceeding with this project and the commitment of large capital sums, it is essential that the oil and gas reserves and rate predictions be corroborated. To remove the uncertainty of the reserves and forecasts would entail a review and validation of the availability and quality of reservoir data and pressure-production statistics, oil and gas reserves determinations and production predictions for certain fields currently in production. Secondly, a review and validation of reservoir and field development studies of each new field to be placed on production is also required. Such studies, if they exist, would also be reviewed to ensure application of latest reservoir management techniques and procedures.

The investigation to corroborate reserves and forecasts would be conducted in the following manner:

1. Basic data, as listed on the attached data sheet, would be accessed from various sources to ascertain its availability and quality. This data review and validation would be performed on three major producing fields: Tarasov, Komsomol and Kharampur.

2. If the data is available and its quality satisfactory, a review of the oil and gas production predictions will take place. If such predictions are not available, or are not satisfactory, suitable reservoir performance studies will be carried out based on the data from Item 1. If the predictions are satisfactory, they will be used in the forecast for the study.

3. Production predictions for the remaining producing fields will also be reviewed and validated as in Item 2.

4. For new fields to be placed on stream later, it is assumed they will be developed using enhanced reservoir management technologies. Existing oil and gas production predictions will be reviewed and validated accordingly. In the absence of these predictions, suitable reservoir performance studies should be carried out.

If satisfactory data is readily available, the reserve and production corroboration could be completed in a few months. If more extensive reservoir performance studies are required, this might require up to 12 - 24 months.

RESERVOIR DATA AND PREDICTIONS CORROBORATION STUDY

PNG - Oilfields in the Pur Region (West Siberia)

The information listed below is generally required for review and validation. It is likely a number of sources may be required to access all of this data.

1. Brief description of the producing fields Tarasov, Komsomol and Kharampur

   A. Location
   B. Overview of regional geology
   C. Overview of field geology
   D. Field history
   E. Statistics on rates and cumulative production of oil, gas and water
   F. Current operational plan/facilities

2. Description of available data of the three fields

   A. Geophysical data (type and amount)
   B. Geological base map
   C. Geological structure map
   D. Geological sample cross-sections showing depositional concept of layers
   E. Cores for description (wells and length)
   F. Well logs (types)
   G. Sample log suite
   H. Core reports (routine and special)
   I. Sample fluid analysis (PVT-Data)
   J. Field analyses
   K. Production decline analysis
   L. Material balance calculations
   M. Isobaric maps over time intervals
   N. Pressure tests
   O. Well histories
   P. Facility schematics
   Q. Production/Injection histories
   R. Previous geologic/engineering studies
   S. Access to/participation of knowledgeable Russian geologists and engineers
   T. Economic factors including operating and capital costs for unit items

1578

FOREIGN EXCHANGE CASH FLOWS OF CASE 1B.1

1C79

SIBERIAN GAS PROCESSING PLANT
Ruble Cash Flow (Financial)

(Million Rubles)

	1995	1996	1997	1998	1999	2000	2001	2002	2003	2004	2005	2006
DISTRIBUTABLE CASH												
NGL Ruble Revenues	-	-	-	-	-	-	-	-	-	-	-	-
Gas Ruble Revenues	-	-	-	-	-	-	-	-	-	-	-	-
Ruble Revenues	-	-	-	-	-	-	-	-	-	-	-	-
Wet Gas Feedstock Ruble Cost	-	-	-	-	-	-	-	-	-	-	-	-
Fixed O&M Ruble Cost	-	85,376	98,721	206,364	225,494	240,129	258,787	278,972	300,732	324,189	349,476	376,735
Transport Ruble Costs	-	455,800	603,781	1,396,009	1,525,419	1,624,418	1,750,636	1,887,185	2,034,386	2,193,068	2,364,127	2,548,529
Export Ruble Tariff	-	-	-	-	-	-	-	-	-	-	-	-
Ruble Tax Expense	-	3,848	5,032	11,568	12,640	13,460	14,506	15,637	16,857	18,172	19,589	21,117
Ruble Operating Expenses	-	545,024	707,534	1,613,940	1,763,553	1,878,007	2,023,928	2,181,795	2,351,975	2,535,429	2,733,192	2,946,381
Ruble Operating Income	-	(545,024)	(707,534)	(1,613,940)	(1,763,553)	(1,878,007)	(2,023,928)	(2,181,795)	(2,351,975)	(2,535,429)	(2,733,192)	(2,946,381)
Plus: VAT Ruble Recovery	(52,372)	(196,885)	(13,032)	65,202	130,403	65,202	-	-	-	-	-	-
Less: Increase in Working Capital	-	2,740	5,571	32,244	1,739	1,852	2,818	3,038	3,275	3,531	3,806	4,103
Less: Ruble Income Taxes	-	22,063	39,276	-	-	-	-	-	14,450	52,157	215,426	273,055
Less: Ruble Capital Expenditures	-	-	-	-	-	-	-	-	-	-	-	-
Distributable Rubles	(52,372)	(766,713)	(765,412)	(1,580,983)	(1,634,888)	(1,814,657)	(2,026,747)	(2,184,833)	(2,369,700)	(2,591,116)	(2,952,425)	(3,223,539)
Less: Ruble Capital Cost Outlays	150,437	606,233	439,557	-	-	-	-	-	-	-	-	-
Net Ruble Cash Flow	(202,810)	(1,372,946)	(1,204,969)	(1,580,983)	(1,634,888)	(1,814,657)	(2,026,747)	(2,184,833)	(2,369,700)	(2,591,116)	(2,952,425)	(3,223,539)
Net Ruble Cash Flow (in $ equiv)	(56,417)	(304,518)	(237,606)	(284,114)	(276,405)	(296,167)	(319,211)	(331,979)	(347,376)	(366,445)	(402,824)	(424,311)
Real Net Ruble Cash Flow (in $ equiv)	(53,755)	(282,249)	(214,232)	(249,187)	(235,823)	(245,801)	(254,736)	(254,736)	(256,299)	(259,969)	(274,786)	(278,311)
Rbl Real Net Present Value (Oct '93 $s)	(1,211,077)											
RUBLE CAPITAL COST OUTLAYS												
Gubkinsky Ruble Expansion Cost	63,330	293,179	193,006	-	-	-	-	-	-	-	-	-
Tarasovsky GPP Ruble Costs	-	-	-	-	-	-	-	-	-	-	-	-
Gas Gathering Systems Ruble Cost	40,593	156,262	134,737	-	-	-	-	-	-	-	-	-
Metering Facilities Ruble Costs	554	2,085	1,806	-	-	-	-	-	-	-	-	-
Infrastructure Ruble Costs	35,175	154,706	110,008	-	-	-	-	-	-	-	-	-
Initial Ruble Working Capital	10,785	-	-	-	-	-	-	-	-	-	-	-
Ruble Capital Cost Outlays	150,437	606,233	439,557	-	-	-	-	-	-	-	-	-

SIBERIAN GAS PROCESSING PLANT
Hard Currency Cash Flows (Financial)

($US Thousands)

	2007	2008	2009	2010	2011	2012	2013	2014	2015	Total
DISTRIBUTABLE HC CASH FLOW										
NGL HC Revenues	225,382	234,398	243,774	253,525	263,666	274,212	285,181	296,588	308,451	4,189,527
Dry Gas HC Revenues	497,330	517,224	537,912	559,429	581,806	605,078	629,282	654,453	680,631	9,311,890
Hard Currency Revenues	722,713	751,621	781,686	812,954	845,472	879,291	914,462	951,041	989,082	13,501,418
Fixed O&M HC Cost	458	476	495	515	536	557	579	603	627	8,581
Transport HC Costs	200,467	208,486	216,825	225,498	234,518	243,899	253,654	263,801	274,353	3,750,295
HC Operating Expenses	200,925	208,962	217,320	226,013	235,054	244,456	254,234	264,403	274,979	3,758,876
HC Operating Income	521,788	542,660	564,366	586,941	610,418	634,835	660,228	686,637	714,103	9,742,542
Plus: Interest Earnings	-	-	-	-	-	-	-	-	-	6,681
Less: WB/Other Loan Interest Expense	-	-	-	-	-	-	-	-	-	153,613
Less: WB/Other Loan Principal	-	-	-	-	-	-	-	-	-	419,781
Less: Increase in DS Reserve Fund	-	-	-	-	-	-	-	-	-	-
Less: HC Capital Expenditures	-	-	-	-	-	-	-	-	-	-
Distributable Hard Currency	521,788	542,660	564,366	586,941	610,418	634,835	660,228	686,637	714,103	9,175,828
Plus: HC Loan Draws	-	-	-	-	-	-	-	-	-	419,781
Less: HC Capital Cost Equity Outlays	-	-	-	-	-	-	-	-	-	252,692
Less: HC Financing Costs	-	-	-	-	-	-	-	-	-	41,738
Hard Currency Net Cash Flow	521,788	542,660	564,366	586,941	610,418	634,835	660,228	686,637	714,103	9,301,180
Real Hard Currency Net Cash Flow	329,084	329,084	329,084	329,084	329,084	329,084	329,084	329,084	329,084	5,890,994
HC Real Net Present Value (Oct '93 $s)										
HC CAPITAL COST OUTLAYS										
Gubkinsky HC Expansion Cost	-	-	-	-	-	-	-	-	-	194,119
Tarasovsky GPP HC Costs	-	-	-	-	-	-	-	-	-	-
Gas Gathering Systems HC Cost	-	-	-	-	-	-	-	-	-	48,346
Metering Facilities HC Costs	-	-	-	-	-	-	-	-	-	1,946
Other Owners HC Costs	-	-	-	-	-	-	-	-	-	8,281
HC Capital Cost Equity Outlays	-	-	-	-	-	-	-	-	-	252,692

SIBERIAN GAS PROCESSING PLANT
Hard Currency Cash Flows (Financial)

($US Thousands)

	1995	1996	1997	1998	1999	2000	2001	2002	2003	2004	2005	2006
DISTRIBUTABLE HC CASH FLOW												
NGL HC Revenues	-	51,120	71,796	162,069	166,607	171,272	178,123	185,248	192,658	200,364	208,379	216,714
Dry Gas HC Revenues	-	162,228	176,254	357,623	367,636	377,930	393,047	408,769	425,120	442,125	459,810	478,202
Hard Currency Revenues	-	213,349	248,050	519,692	534,244	549,202	571,170	594,017	617,778	642,489	668,189	694,916
Fixed O&M HC Cost	-	157	161	329	339	348	362	376	391	407	423	440
Transport HC Costs	-	63,042	70,198	144,153	148,189	152,338	158,432	164,769	171,360	178,214	185,343	192,757
HC Operating Expenses	-	63,199	70,359	144,482	148,528	152,686	158,794	165,146	171,751	178,621	185,766	193,197
HC Operating Income	-	150,149	177,691	375,210	385,716	396,516	412,377	428,872	446,027	463,868	482,422	501,719
Plus: Interest Earnings	-	-	-	-	379	1,066	1,011	956	900	845	790	734
Less: WB/Other Loan Interest Expense	-	-	-	31,830	28,139	24,449	20,759	17,068	13,378	9,687	5,997	2,307
Less: WB/Other Loan Principal	-	-	-	46,642	46,642	46,642	46,642	46,642	46,642	46,642	46,642	46,642
Less: Increase in DS Reserve Fund	-	-	-	12,624	22,922	(1,845)	(1,845)	(1,845)	(1,845)	(1,845)	(1,845)	(24,474)
Less: HC Capital Expenditures	-	-	-	-	-	-	-	-	-	-	-	-
Distributable Hard Currency	-	150,149	177,691	284,114	288,391	328,336	347,832	367,962	388,752	410,228	432,418	477,979
Plus: HC Loan Draws	68,885	207,376	143,520	-	-	-	-	-	-	-	-	-
Less: HC Capital Cost Equity Outlays	44,450	128,610	79,632	-	-	-	-	-	-	-	-	-
Less: HC Financing Costs	2,269	11,475	27,995	-	-	-	-	-	-	-	-	-
Hard Currency Net Cash Flow	22,167	217,440	213,584	284,114	288,391	328,336	347,832	367,962	388,752	410,228	432,418	477,979
Real Hard Currency Net Cash Flow	21,121	201,539	192,573	249,187	246,049	272,499	277,576	282,347	286,826	291,031	294,974	313,513
HC Real Net Present Value (Oct '93 $s)	1,213,885											
HC CAPITAL COST OUTLAYS												
Gubkinsky HC Expansion Cost	28,332	104,579	61,207	-	-	-	-	-	-	-	-	-
Tarasovsky GPP HC Costs	-	-	-	-	-	-	-	-	-	-	-	-
Gas Gathering Systems HC Cost	7,528	23,106	17,712	-	-	-	-	-	-	-	-	-
Metering Facilities HC Costs	308	925	712	-	-	-	-	-	-	-	-	-
Other Owners HC Costs	8,281	-	-	-	-	-	-	-	-	-	-	-
HC Capital Cost Equity Outlays	44,450	128,610	79,632	-	-	-	-	-	-	-	-	-

SIBERIAN GAS PROCESSING PLANT
Ruble Cash Flow (Financial)

(Million Rubles)

	2007	2008	2009	2010	2011	2012	2013	2014	2015	Total
DISTRIBUTABLE CASH										
NGL Ruble Revenues	-	-	-	-	-	-	-	-	-	-
Gas Ruble Revenues	-	-	-	-	-	-	-	-	-	-
Ruble Revenues	-	-	-	-	-	-	-	-	-	-
Wet Gas Feedstock Ruble Cost	-	-	-	-	-	-	-	-	-	-
Fixed O&M Ruble Cost	406,120	437,798	471,946	508,758	548,441	591,219	637,334	687,046	740,636	7,774,271
Transport Ruble Costs	2,747,314	2,961,605	3,192,610	3,441,634	3,710,081	3,999,467	4,311,426	4,647,717	5,010,239	52,405,450
Export Ruble Tariff	-	-	-	-	-	-	-	-	-	-
Ruble Tax Expense	22,765	24,540	26,454	28,518	30,742	33,140	35,725	38,512	41,516	434,338
Ruble Operating Expenses	3,176,199	3,423,943	3,691,010	3,978,909	4,289,264	4,623,826	4,984,485	5,373,275	5,792,390	60,614,059
Ruble Operating Income	(3,176,199)	(3,423,943)	(3,691,010)	(3,978,909)	(4,289,264)	(4,623,826)	(4,984,485)	(5,373,275)	(5,792,390)	(60614059)
Plus: VAT Ruble Recovery	-	-	-	-	-	-	-	-	-	(1,482)
Less: Increase in Working Capital	4,423	4,768	5,140	5,541	5,973	6,439	6,941	7,482	(201,647)	(90,225)
Less: Ruble Income Taxes	298,474	321,755	346,852	373,906	403,071	434,510	468,402	504,937	544,322	4,312,655
Less: Ruble Capital Expenditures	-	-	-	-	-	-	-	-	-	-
Distributable Rubles	(3,479,096)	(3,750,465)	(4,043,001)	(4,358,355)	(4,698,307)	(5,064,775)	(5,459,828)	(5,885,694)	(6,135,065)	(64837971)
Less: Ruble Capital Cost Outlays	-	-	-	-	-	-	-	-	-	1,196,227
Net Ruble Cash Flow	(3,479,096)	(3,750,465)	(4,043,001)	(4,358,355)	(4,698,307)	(5,064,775)	(5,459,828)	(5,885,694)	(6,135,065)	(66034198)
Net Ruble Cash Flow (in $ equiv)	(441,806)	(459,478)	(477,858)	(496,972)	(516,851)	(537,525)	(559,026)	(581,387)	(584,657)	(8,302,933)
Real Net Ruble Cash Flow (in $ equiv)	(278,641)	(278,641)	(278,641)	(278,641)	(278,641)	(278,641)	(278,641)	(278,641)	(269,431)	(5,358,442)
Rbl Real Net Present Value (Oct '93 $s)										
RUBLE CAPITAL COST OUTLAYS										
Gubkinsky Ruble Expansion Cost	-	-	-	-	-	-	-	-	-	549,515
Tarasovsky GPP Ruble Costs	-	-	-	-	-	-	-	-	-	-
Gas Gathering Systems Ruble Cost	-	-	-	-	-	-	-	-	-	331,592
Metering Facilities Ruble Costs	-	-	-	-	-	-	-	-	-	4,446
Infrastructure Ruble Costs	-	-	-	-	-	-	-	-	-	299,889
Initial Ruble Working Capital	-	-	-	-	-	-	-	-	-	10,785
Ruble Capital Cost Outlays	-	-	-	-	-	-	-	-	-	1,196,227

SIBERIAN GAS PROCESSING PLANT
Hard Currency Cash Flows (Financial)

($US Thousands)

	1995	1996	1997	1998	1999	2000	2001	2002	2003	2004	2005	2006
DISTRIBUTABLE HC CASH FLOW												
NGL HC Revenues	-	-	-	-	-	-	-	-	-	-	-	-
Dry Gas HC Revenues	-	-	-	-	-	-	-	-	-	-	-	-
Hard Currency Revenues	-	-	-	-	-	-	-	-	-	-	-	-
Fixed O&M HC Cost	-	157	161	329	339	348	362	376	391	407	423	440
Transport HC Costs	-	-	-	-	-	-	-	-	-	-	-	-
HC Operating Expenses	-	157	161	329	339	348	362	376	391	407	423	440
HC Operating Income	-	(157)	(161)	(329)	(339)	(348)	(362)	(376)	(391)	(407)	(423)	(440)
Plus: Interest Earnings	-	-	-	-	-	91	2	-	-	139	436	658
Less: WB/Other Loan Interest Expense	-	-	-	32,123	28,399	24,674	20,950	17,225	13,501	9,777	6,052	2,328
Less: WB/Other Loan Principal	-	-	-	47,072	47,072	47,072	47,072	47,072	47,072	47,072	47,072	47,072
Less: Increase in DS Reserve Fund	-	-	-	-	3,045	(2,963)	(82)	-	4,635	9,891	7,401	(21,927)
Less: HC Capital Expenditures	-	-	-	-	-	-	-	-	-	-	-	-
Distributable Hard Currency	-	(157)	(161)	(79,524)	(78,854)	(69,039)	(68,299)	(64,674)	(65,599)	(67,008)	(60,512)	(27,256)
Plus: HC Loan Draws	68,893	208,833	145,921	-	-	-	-	-	-	-	-	-
Less: HC Capital Cost Equity Outlays	44,450	128,610	79,632	-	-	-	-	-	-	-	-	-
Less: HC Financing Costs	2,279	11,527	28,185	-	-	-	-	-	-	-	-	-
Hard Currency Net Cash Flow	22,164	68,540	37,943	(79,524)	(78,854)	(69,039)	(68,299)	(64,674)	(65,599)	(67,008)	(60,512)	(27,256)
Real Hard Currency Net Cash Flow	21,119	63,528	34,211	(69,748)	(67,277)	(57,299)	(54,504)	(49,626)	(48,400)	(47,538)	(41,278)	(17,877)
HC Real Net Present Value (Oct '93 $s)	(70,449)											
HC CAPITAL COST OUTLAYS												
Gubkinsky HC Expansion Cost	28,332	104,579	61,207	-	-	-	-	-	-	-	-	-
Tarasovsky GPP HC Costs	-	-	-	-	-	-	-	-	-	-	-	-
Gas Gathering Systems HC Cost	7,528	23,106	17,712	-	-	-	-	-	-	-	-	-
Metering Facilities HC Costs	308	925	712	-	-	-	-	-	-	-	-	-
Other Owners HC Costs	8,281	-	-	-	-	-	-	-	-	-	-	-
HC Capital Cost Equity Outlays	44,450	128,610	79,632	-	-	-	-	-	-	-	-	-

SIBERIAN GAS PROCESSING PLANT
Hard Currency Cash Flows (Financial)

($US Thousands)

	2007	2008	2009	2010	2011	2012	2013	2014	2015	Total
DISTRIBUTABLE HC CASH FLOW										
NGL HC Revenues	-	-	-	-	-	-	-	-	-	-
Dry Gas HC Revenues	-	-	-	-	-	-	-	-	-	-
Hard Currency Revenues	-	-	-	-	-	-	-	-	-	-
Fixed O&M HC Cost	458	476	495	515	536	557	579	603	627	8,581
Transport HC Costs	-	-	-	-	-	-	-	-	-	-
HC Operating Expenses	458	476	495	515	536	557	579	603	627	8,581
HC Operating Income	(458)	(476)	(495)	(515)	(536)	(557)	(579)	(603)	(627)	(8,581)
Plus: Interest Earnings	-	-	-	-	-	-	-	-	-	1,326
Less: WB/Other Loan Interest Expense	-	-	-	-	-	-	-	-	-	155,028
Less: WB/Other Loan Principal	-	-	-	-	-	-	-	-	-	423,647
Less: Increase in DS Reserve Fund	-	-	-	-	-	-	-	-	-	-
Less: HC Capital Expenditures	-	-	-	-	-	-	-	-	-	-
Distributable Hard Currency	(458)	(476)	(495)	(515)	(536)	(557)	(579)	(603)	(627)	(585,930)
Plus: HC Loan Draws	-	-	-	-	-	-	-	-	-	423,647
Less: HC Capital Cost Equity Outlays	-	-	-	-	-	-	-	-	-	252,692
Less: HC Financing Costs	-	-	-	-	-	-	-	-	-	41,990
Hard Currency Net Cash Flow	(458)	(476)	(495)	(515)	(536)	(557)	(579)	(603)	(627)	(456,964)
Real Hard Currency Net Cash Flow	(289)	(289)	(289)	(289)	(289)	(289)	(289)	(289)	(289)	(337,289)
HC Real Net Present Value (Oct '93 $s)										
HC CAPITAL COST OUTLAYS										
Gubkinsky HC Expansion Cost	-	-	-	-	-	-	-	-	-	194,119
Tarasovsky GPP HC Costs	-	-	-	-	-	-	-	-	-	-
Gas Gathering Systems HC Cost	-	-	-	-	-	-	-	-	-	48,346
Metering Facilities HC Costs	-	-	-	-	-	-	-	-	-	1,946
Other Owners HC Costs	-	-	-	-	-	-	-	-	-	8,281
HC Capital Cost Equity Outlays	-	-	-	-	-	-	-	-	-	252,692

SIBERIAN GAS PROCESSING PLANT
Ruble Cash Flow (Financial)

(Million Rubles)

	1995	1996	1997	1998	1999	2000	2001	2002	2003	2004	2005	2006
DISTRIBUTABLE CASH												
NGL Ruble Revenues	-	108,607	171,571	424,972	464,367	494,504	532,927	574,495	619,306	667,612	719,686	775,821
Gas Ruble Revenues	-	138,884	169,724	377,872	412,900	439,698	473,862	510,823	550,668	593,620	639,922	689,836
Ruble Revenues	-	247,491	341,294	802,843	877,267	934,202	1,006,789	1,085,319	1,169,973	1,261,231	1,359,607	1,465,657
Wet Gas Feedstock Ruble Cost	-	-	-	-	-	-	-	-	-	-	-	-
Fixed O&M Ruble Cost	-	85,376	98,721	206,364	225,494	240,129	258,787	278,972	300,732	324,189	349,476	376,735
Transport Ruble Costs	-	72,769	114,955	284,738	311,133	331,326	357,070	384,921	414,945	447,311	482,201	519,813
Export Ruble Tariff	-	-	-	-	-	-	-	-	-	-	-	-
Ruble Tax Expense	-	990	1,365	3,211	3,509	3,737	4,027	4,341	4,680	5,045	5,438	5,863
Ruble Operating Expenses	-	159,135	215,041	494,314	540,136	575,191	619,884	668,235	720,357	776,545	837,115	902,410
Ruble Operating Income	-	88,356	126,253	308,530	337,131	359,010	386,905	417,084	449,617	484,687	522,492	563,247
Plus: VAT Ruble Recovery	(52,372)	(196,885)	(13,032)	65,202	130,403	65,202	-	-	-	-	-	-
Less: Increase in Working Capital	-	(2,720)	3,310	20,843	1,125	1,198	1,824	1,966	2,119	2,285	2,463	2,655
Less: Ruble Income Taxes	-	7,891	17,467	-	-	-	-	-	-	8,592	76,516	87,554
Less: Ruble Capital Expenditures	-	-	-	-	-	-	-	-	-	-	-	-
Distributable Rubles	(52,372)	(113,700)	92,444	352,889	466,409	423,014	385,082	415,118	447,497	473,810	443,513	473,037
Less: Ruble Capital Cost Outlays	150,437	606,233	439,557	-	-	-	-	-	-	-	-	-
Net Ruble Cash Flow	(202,810)	(719,933)	(347,113)	352,889	466,409	423,014	385,082	415,118	447,497	473,810	443,513	473,037
Net Ruble Cash Flow (in $ equiv)	(56,417)	(159,680)	(68,447)	63,417	78,854	69,039	60,650	63,076	65,599	67,008	60,512	62,265
Real Net Ruble Cash Flow (in $ equiv)	(53,755)	(148,003)	(61,713)	55,621	67,277	57,299	48,400	48,400	48,400	47,538	41,278	40,841
Rbl Real Net Present Value (Oct '93 $s)	(1,781)											
RUBLE CAPITAL COST OUTLAYS												
Gubkinsky Ruble Expansion Cost	63,330	293,179	193,006	-	-	-	-	-	-	-	-	-
Tarasovsky GPP Ruble Costs	-	-	-	-	-	-	-	-	-	-	-	-
Gas Gathering Systems Ruble Cost	40,593	156,262	134,737	-	-	-	-	-	-	-	-	-
Metering Facilities Ruble Costs	554	2,085	1,806	-	-	-	-	-	-	-	-	-
Infrastructure Ruble Costs	35,175	154,706	110,008	-	-	-	-	-	-	-	-	-
Initial Ruble Working Capital	10,785	-	-	-	-	-	-	-	-	-	-	-
Ruble Capital Cost Outlays	150,437	606,233	439,557	-	-	-	-	-	-	-	-	-

SIBERIAN GAS PROCESSING PLANT
Ruble Cash Flow (Financial)

(Million Rubles)

	2007	2008	2009	2010	2011	2012	2013	2014	2015	Total
DISTRIBUTABLE CASH										
NGL Ruble Revenues	836,335	901,569	971,892	1,047,699	1,129,420	1,217,514	1,312,480	1,414,854	1,525,213	15,910,843
Gas Ruble Revenues	743,643	801,647	864,176	931,581	1,004,245	1,082,576	1,167,017	1,258,044	1,356,171	14,206,907
Ruble Revenues	1,579,978	1,703,216	1,836,067	1,979,280	2,133,664	2,300,090	2,479,497	2,672,898	2,881,384	30,117,750
Wet Gas Feedstock Ruble Cost	-	-	-	-	-	-	-	-	-	-
Fixed O&M Ruble Cost	406,120	437,798	471,946	508,758	548,441	591,219	637,334	687,046	740,636	7,774,271
Transport Ruble Costs	560,358	604,066	651,183	701,975	756,729	815,754	879,383	947,975	1,021,917	10,660,523
Export Ruble Tariff	-	-	-	-	-	-	-	-	-	-
Ruble Tax Expense	6,320	6,813	7,344	7,917	8,535	9,200	9,918	10,692	11,526	120,471
Ruble Operating Expenses	972,798	1,048,676	1,130,473	1,218,650	1,313,705	1,416,174	1,526,635	1,645,713	1,774,078	18,555,265
Ruble Operating Income	607,180	654,540	705,594	760,630	819,960	883,916	952,862	1,027,185	1,107,306	11,562,485
Plus: VAT Ruble Recovery	-	-	-	-	-	-	-	-	-	(1,482)
Less: Increase in Working Capital	2,862	3,085	3,326	3,585	3,865	4,166	4,491	4,842	(130,487)	(63,195)
Less: Ruble Income Taxes	96,572	197,267	224,449	241,956	260,829	281,173	303,105	326,747	352,233	2,482,352
Less: Ruble Capital Expenditures	-	-	-	-	-	-	-	-	-	-
Distributable Rubles	507,746	454,187	477,819	515,089	555,266	598,577	645,266	695,596	885,559	9,141,845
Less: Ruble Capital Cost Outlays	-	-	-	-	-	-	-	-	-	1,196,227
Net Ruble Cash Flow	507,746	454,187	477,819	515,089	555,266	598,577	645,266	695,596	885,559	7,945,618
Net Ruble Cash Flow (in $ equiv)	64,478	55,644	56,475	58,734	61,084	63,527	66,068	68,711	84,392	884,989
Real Net Ruble Cash Flow (in $ equiv)	40,665	33,744	32,931	32,931	32,931	32,931	32,931	32,931	38,891	502,467
Rbl Real Net Present Value (Oct '93 $s)										
RUBLE CAPITAL COST OUTLAYS										
Gubkinsky Ruble Expansion Cost	-	-	-	-	-	-	-	-	-	549,515
Tarasovsky GPP Ruble Costs	-	-	-	-	-	-	-	-	-	-
Gas Gathering Systems Ruble Cost	-	-	-	-	-	-	-	-	-	331,592
Metering Facilities Ruble Costs	-	-	-	-	-	-	-	-	-	4,446
Infrastructure Ruble Costs	-	-	-	-	-	-	-	-	-	299,889
Initial Ruble Working Capital	-	-	-	-	-	-	-	-	-	10,785
Ruble Capital Cost Outlays	-	-	-	-	-	-	-	-	-	1,196,227

SENSITIVITY ANALYSES TO CASE 1B.1
SUMMARY TABLE & INDIVIDUAL RETURNS

1588

Table 5.2 - 3

SUMMARY OF SENSITIVITY ANALYSIS

	Unleveraged		Leveraged		Debt Service Coverage Ratios	
	ROI (%)	Payback (Years)	ROE (%)	Payback (Years)	Min. (%)	Avg. (%)
Case						
Base Evaluation-Case 1B.1	14.7	4.9	12.5	6.9	116	150
Revenues						
Revenues +25%	40.0	1.6	49.8	1.3	241	329
Revenues -10%	2.0	11.6	(5.2)	None	53	65
Pricing						
NGL Export Price; Gas Export Price +25%	32.6	2.1	38.6	1.8	206	273
NGL Export Price; Gas Export Price -15%	1.4	12.1	(6.0)	None	50	62
NGL Export Price +25%; Gas Export Price	22.6	3.2	24.0	3.2	164	206
NGL Export Price -25%; Gas Export Price	5.4	8.9	(0.5)	15.2	67	95
NGL Export Price; Gas Domestic Price	13.9	5.1	11.7	7.4	113	147
NGL Export Price; Gas Domestic Price +25%	17.4	4.2	17.1	4.9	134	172
NGL Export Price; Gas Domestic Price -25%	10.1	6.5	6.6	10.2	92	123
NGL Export Price +25%; Gas Domestic Price	21.9	3.4	23.3	3.3	162	202
NGL Export Price -25%; Gas Domestic Price	4.4	9.6	(1.4)	16.0	64	81
NGL Domestic Price; Gas Domestic Price	7.7	7.6	3.3	12.3	80	103
NGL Domestic Price; Gas Domestic Price +25%	11.7	5.9	8.7	9.2	100	133
NGL Domestic Price; Gas Domestic Price -25%	3.1	10.6	(2.9)	17.4	59	73
NGL Domestic Price +25%; Gas Domestic Price	12.0	5.7	9.2	9.0	103	135
NGL Domestic Price -25%; Gas Domestic Price	2.5	11.1	(3.6)	None	57	70
NGL Domestic Price; Gas Export Price	8.5	7.2	4.1	11.8	83	108
NGL Domestic Price; Gas Export Price +25%	27.3	2.6	31.0	2.3	183	235
NGL Domestic Price; Gas Export Price -5%	3.9	10.0	(2.4)	16.9	61	76
NGL Domestic Price +25%; Gas Export Price	12.8	5.5	9.9	8.6	106	139
NGL Domestic Price -25%; Gas Export Price	3.6	10.2	(2.7)	17.2	60	74
Capital Costs						
Capital Costs +25%	10.9	6.1	7.4	9.8	95	127
Capital Costs -25%	20.4	3.6	20.9	3.7	151	190

Table 5.2 - 3 (Continued)

SUMMARY OF SENSITIVITY ANALYSIS

	Unleveraged		Leveraged		Debt Service Coverage Ratios	
	ROI (%)	Payback (Years)	ROE (%)	Payback (Years)	Min. (%)	Avg. (%)
Operating Expenses						
Operating Expenses +25%	12.6	5.5	9.6	8.8	104	138
Operating Expenses -25%	16.7	4.4	15.5	5.4	128	164
Operating Expenses +50%	10.5	6.3	6.7	10.1	93	124
Operating Expenses +100%	6.0	8.6	0.2	14.6	70	90
Operating Expenses +150%	0.5	13.0	N/A	None	46	57
Transport Costs						
Transport Costs +15%	(0.4)	14.0	(8.4)	None	41	51
Transport Costs -25%	34.1	2.0	40.9	1.7	214	286
Gasprom Tariff @US$10/MCM	38.5	1.7	47.8	1.4	233	316
Eastern European Gas Tariff +25%	7.5	7.7	2.5	12.8	77	100
Eastern European Gas Tariff -25%	21.2	3.5	22.2	3.5	156	195
NGL Pipeline Tariff -25%	17.1	4.3	16.2	5.2	131	168
NGL Pipeline Tariff -50%	19.5	3.8	19.8	4.0	146	185
Effect of NGL Content						
Minimum NGL Production	12.6	5.5	9.6	8.8	104	137
Maximum NGL Production	16.6	4.4	15.5	5.4	128	165
Average Declining NGL Production	12.6	5.1	9.5	8.2	117	138
Taxation						
Full Taxation (Note: w/o Gas Export Tariff)	14.8	4.9	3.9	11.9	82	107
Expected Taxation	14.7	4.9	12.5	6.9	116	150
Profits Tax Only	14.7	4.9	16.0	6.2	104	148

N/A - Not Available (negative operating cash flow precludes calculation of return)

SIBERIAN GAS PROCESSING PLANT
Data and Key Results

BASE EVALUATION CASE 1B.1

TIMING DATA

Cost Estimate Month	Oct 93	First, Last Operation Month	Jan 96	Dec 15
Financial Closing Month	Jan 95	Economic Life	20.00	

ENGINEERING DATA

	1994	1995	1996	1997	1998	1999	2000	2001
Rated Capacity (BCM/yr)in 1996, 1998	2.14	4.28						
Stream Factor		-	100%	100%	100%	100%	100%	100%
Operations Partial Year Factor	-	-	1.000	1.000	1.000	100%	100%	100%
Wet Gas Processed (MCM)	-	-	2.14	2.14	4.28	4.28	4.28	4.28
Dry Gas Production (BCM)	-	-	1.80	1.91	3.76	3.76	3.76	3.76
NGL Production (MMTons)	-	-	0.36	0.49	1.07	1.07	1.07	1.07

REVENUE DATA (1996 $'s)

NGL Domestic Price ($/Ton)	67.86	Domestic Gas Price ($/MCM)	17.09
NGL Export Price ($/Ton)	144.00	Export Gas Price ($/MCM)	90.00
% NGL for Export	100%	% Dry Gas for Export	100%

OPERATING COST DATA (1993 $000's)

Wet Gas Feedstock Cost ($/MCM)	-	
Chemicals Cost	382	
Utility Cost	19,432	
Maintenance Cost	985	
Labor Cost, Benefits	1,364	518
Other Expenses	10,134	

TRANSPORT COSTS (1996 $'s)

	DOM	EXP
Dry Gas In-Russia Costs ($/MCM)	-	40.00
Dry Gas Export Costs		32.00
NGL In-Russia Costs ($/Ton)	1.94	36.55
NGL Pipeline Costs	43.52	43.52
NGL Port Loading Charge		1.62
NGL Shipping Cost		15.10

CAPITAL COST DATA (1993 $000's)

	1995	1996	1997	Total
Gubkinsky GPP Expansion	43,700	157,500	90,300	291,500
Tarasovsky Gas Processing Plant	-	-	-	-
Gas Gathering Systems Cost	17,900	53,700	40,200	111,800
Metering Facilities Cost	440	1,290	970	2,700
Contributed Assets	9,841	21,705	10,727	42,272
Other Owners Costs	8,000	-	-	8,000
Infrastructure Costs	9,306	31,874	19,721	60,900
Initial Working Capital	2,839	-	-	2,839
Capital Costs	92,026	266,068	161,917	520,011

WORKING CAPITAL DATA

Days Receivables	45
Days Payables	45

FINANCING DATA

	WB/Other Loan	
% of Permanent Financing	70%	
Loan Amount, Commitment	419,781	419,787
Loan Interest Rate	8.15%	
Start of Repayment, Repayment Period	Jan 98	9.0
Commitment Fees %	0.25%	
Upfront Fee %	-	
Other Fin Fees & Close Costs (%, Amt)	-	

KEY RESULTS SUMMARY

Real Return on Investment (no taxes)	14.7%
Unleveraged Payback (Yrs)	4.9
Nominal NPV (Oct '93) @ 15.0%	73,863
Real Return on Equity	12.5%
Leveraged Payback (Yrs)	6.9
Nominal NPV (Oct '93) @ 15.0%	16,711
Min Debt Service Coverage	116%
Average Debt Service Coverage	150%

FINANCING DATA (cont'd)

	Actual
Required Reserves (1st Operating Yr)	39,236
Cash Flow Dedicated to Reserves	100%
Reinvestment Rate	3.0%

TAX DATA

Tax & Book In Service Month	Jan 96
Profits Tax	32.00%
15% Yr SL Property %	100.0%
Carryforward Years	5
VAT Tax (% of CapEx)	20.0%
Property Tax (% of Fixed Assets)	-
Road Tax (% of Revenues)	0.4%
Dry Gas Export Tariff ('93 $/MCM)	-
NGL Export Tariff ('93 $/Ton)	-

ECONOMIC DATA

Global Inflation Rate	2.8% **
Capital Cost Esc Rate	2.8%
O&M Esc Rate	2.8%
Export Gas Price Esc Rate	2.8%
Domestic Gas Price Esc Rate	2.8%
Export NGL Price Esc Rate	2.8%
Domestic NGL Price Esc Rate	2.8%

** Until 2000, 4% thereafter
(all escalation equivalent to inflation)

SENSITIVITY ANALYSIS FACTORS

O&M Cost	1.00
Gas Price	1.00
NGL Price	1.00
Capital Cost	1.00
Transport Cost	1.00
Wet Gas Price	1.00

003

SIBERIAN GAS PROCESSING PLANT
Annual Sources and Uses of Funds During Construction

($US Thousands)

	1995	1996	1997	Total	%
SOURCES OF FUNDS					
World Bank/Other Loan	68,885	207,376	143,520	419,781	70%
SIBNG Cash Equity	-	-	-	-	-
PNG Cash Equity	-	-	-	-	-
Gasprom Cash Equity	4,920	10,852	5,363	21,136	4%
SIBNG Equity	4,920	10,852	5,363	21,136	4%
PNG Equity	4,920	10,852	5,363	21,136	4%
Foreign Equity	14,761	32,557	16,089	63,407	11%
JV Operating Cash Flow	-	23,762	29,330	53,092	9%
Total Sources of Funds	98,407	296,251	205,029	599,688	100%
USES OF FUNDS					
Gubkinsky GPP Expansion	45,950	169,606	99,266	314,821	
Tarasovsky Gas Processing Plant	-	-	-	-	
Gas Gathering Systems Cost	18,820	57,765	44,281	120,866	
Metering Facilities Costs	463	1,388	1,068	2,919	
Infrastructure Costs	9,785	34,314	21,692	65,791	
Contributed Assets	9,841	21,705	10,727	42,272	
Other Owners Costs	8,281	-	-	8,281	
Initial Working Capital	3,000	-	-	3,000	
Capital Costs	96,139	284,776	177,035	557,949	93%
Other Loan Interest	1,260	10,766	27,824	39,851	
Other Loan Commitment Fees	1,009	709	170	1,887	
Upfront Fees	-	-	-	-	
Financing Costs	2,269	11,475	27,995	41,738	7%
Total Uses of Funds	98,407	296,251	205,029	599,688	100%

	$	%
Total Debt	419,781	70%
Operating Cash	53,092	9%
Equity Requirement	126,814	21%
	599,688	100%

MEMORANDA	WB/Other Loan	
Loan Draws, Amount	419,781	
Standby Facility	-	
Constr Loan Draws + Standby, Commitment	419,781	419,787
Constr Loan Int Rate	8.15%	
Commitment Fee Rate	0.25%	
Upfront Fee Rate	-	
Other Financing Fees (%, Amt)	-	
Repayment Period	9.0	

** NOTE: ANNUAL SANDU STATEMENT IS FOR PRESENTATION ONLY. VALUES ARE FROM QUARTERLY CALCULATIONS.

VAT TAX FUNDING				
VAT Tax	15,003	52,614	33,262	100,879
VAT Recovery Expressed in $'s	435	8,945	30,692	40,072
Net VAT Payment	14,569	43,669	2,570	60,807
PNG Cash Equity for VAT	2,428	7,278	428	10,135
SNGP Cash Equity for VAT	2,428	7,278	428	10,135
Gasprom Cash Equity for VAT	2,428	7,278	428	10,135
Foreign Equity for VAT	7,284	21,834	1,285	30,404
Cash Equity for VAT	14,569	43,669	2,570	60,807

Equity Requirement	126,814
Equity for VAT	60,807
Total Equity	166,486

004

SIBERIAN GAS PROCESSING PLANT
Incremental Unleveraged Cash Flow Statement

($US Thousands)

	1995	1996	1997	1998	1999	2000	2001	2002	2003	2004	2005	2006	2007
UNLEVERAGED CASH FLOW													
NGL Domestic Revenues	-	-	-	-	-	-	-	-	-	-	-	-	-
NGL Export Revenues	-	51,120	71,796	162,069	166,607	171,272	178,123	185,248	192,658	200,364	208,379	216,714	225,382
Gas Domestic Revenues	-	-	-	-	-	-	-	-	-	-	-	-	-
Gas Export Revenues	-	162,228	176,254	357,623	367,636	377,930	393,047	408,769	425,120	442,125	459,810	478,202	497,330
Revenues	-	213,349	248,050	519,692	534,244	549,202	571,170	594,017	617,778	642,489	668,189	694,916	722,713
Wet Gas Feedstock Cost	-	-	-	-	-	-	-	-	-	-	-	-	-
Fixed O&M Cost	-	19,093	19,628	37,414	38,462	39,539	41,121	42,765	44,476	46,255	48,105	50,029	52,031
Transport Costs	-	164,138	189,257	395,026	406,087	417,457	434,155	451,522	469,582	488,366	507,900	528,216	549,345
Operating Expenses	-	183,232	208,885	432,440	444,549	456,996	475,276	494,287	514,058	534,621	556,006	578,246	601,376
Operating Income	-	30,117	39,165	87,252	89,695	92,206	95,895	99,730	103,720	107,868	112,183	116,670	121,337
Less: Capital Expenditures	-	-	-	-	-	-	-	-	-	-	-	-	-
Less: Increase In Working Capital	-	608	1,098	5,795	294	302	444	462	480	499	519	540	562
Unleveraged Distributable Cash	-	29,509	38,067	81,457	89,401	91,904	95,451	99,269	103,239	107,369	111,664	116,130	120,776
Less: Capital Cost Cash Outlays	86,298	263,071	166,308	-	-	-	-	-	-	-	-	-	-
Unleveraged Net Cash Flow	(86,298)	(233,562)	(128,241)	81,457	89,401	91,904	95,451	99,269	103,239	107,369	111,664	116,130	120,776
Cumulative	(86,298)	(319,860)	(448,101)	(366,644)	(277,243)	(185,339)	(89,889)	9,380	112,619	219,988	331,652	447,782	568,558
Payback from Jan 1998 (Yrs)	4.9												
Nominal NPV (Oct 1993) @ 15%	73,863												
Real Unleveraged Net Cash Flow	(82,227)	(216,482)	(115,625)	71,443	76,275	76,275	76,171	76,171	76,171	76,171	76,171	76,171	76,171
Real Return on Investment	14.7%												
CAPITAL COST CASH OUTLAYS													
Gubkinsky GPP Expansion	45,950	169,606	99,266	-	-	-	-	-	-	-	-	-	-
Tarasovsky GPP	-	-	-	-	-	-	-	-	-	-	-	-	-
Gas Gathering Systems Cost	18,820	57,765	44,281	-	-	-	-	-	-	-	-	-	-
Metering Facilities Costs	463	1,388	1,068	-	-	-	-	-	-	-	-	-	-
Infrastructure Costs	9,785	34,314	21,692	-	-	-	-	-	-	-	-	-	-
Other Owners Costs	8,281	-	-	-	-	-	-	-	-	-	-	-	-
Initial Working Capital	3,000	-	-	-	-	-	-	-	-	-	-	-	-
Capital Cost Cash Outlays	86,298	263,071	166,308	-	-	-	-	-	-	-	-	-	-

SIBERIAN GAS PROCESSING PLANT
Incremental Unleveraged Cash Flow Statement

($US Thousands)

	2008	2009	2010	2011	2012	2013	2014	2015	Total
UNLEVERAGED CASH FLOW									
NGL Domestic Revenues	-	-	-	-	-	-	-	-	-
NGL Export Revenues	234,398	243,774	253,525	263,666	274,212	285,181	296,588	308,451	4,189,527
Gas Domestic Revenues	-	-	-	-	-	-	-	-	-
Gas Export Revenues	517,224	537,912	559,429	581,806	605,078	629,282	654,453	680,631	9,311,890
Revenues	751,621	781,686	812,954	845,472	879,291	914,462	951,041	989,082	13,501,418
Wet Gas Feedstock Cost	-	-	-	-	-	-	-	-	-
Fixed O&M Cost	54,112	56,276	58,527	60,869	63,303	65,835	68,469	71,208	977,518
Transport Costs	571,319	594,172	617,938	642,656	668,362	695,097	722,901	751,817	10,265,312
Operating Expenses	625,431	650,448	676,466	703,524	731,665	760,932	791,369	823,024	11,242,830
Operating Income	126,191	131,238	136,488	141,947	147,625	153,530	159,671	166,058	2,258,587
Less: Capital Expenditures	-	-	-	-	-	-	-	-	-
Less: Increase In Working Capital	584	607	632	657	683	711	739	(19,217)	(3,000)
Unleveraged Distributable Cash	125,607	130,631	135,856	141,290	146,942	152,820	158,932	185,275	2,261,587
Less: Capital Cost Cash Outlays	-	-	-	-	-	-	-	-	515,677
Unleveraged Net Cash Flow	125,607	130,631	135,856	141,290	146,942	152,820	158,932	185,275	1,745,910
Cumulative	694,164	824,795	960,651	1,101,941	1,248,883	1,401,703	1,560,635	1,745,910	
Payback from Jan 1998 (Yrs)									
Nominal NPV (Oct 1993) @ 15%									
Real Unleveraged Net Cash Flow	76,171	76,171	76,171	76,171	76,171	76,171	76,171	85,381	961,440
Real Return on Investment									
CAPITAL COST CASH OUTLAYS									
Subkinsky GPP Expansion	-	-	-	-	-	-	-	-	314,821
Tarasovsky GPP	-	-	-	-	-	-	-	-	-
Gas Gathering Systems Cost	-	-	-	-	-	-	-	-	120,866
Metering Facilities Costs	-	-	-	-	-	-	-	-	2,919
Infrastructure Costs	-	-	-	-	-	-	-	-	65,791
Other Owners Costs	-	-	-	-	-	-	-	-	8,281
Initial Working Capital	-	-	-	-	-	-	-	-	3,000
Capital Cost Cash Outlays	-	-	-	-	-	-	-	-	515,677

SIBERIAN GAS PROCESSING PLANT
Cash Flow Statement

($US Thousands)

	1998	1999	2000	2001	2002	2003	2004	2005	2006	2007	2008	2009
DISTRIBUTABLE CASH												
NGL Domestic Revenues	-	-	-	-	-	-	-	-	-	-	-	-
NGL Export Revenues	162,069	166,607	171,272	178,123	185,248	192,658	200,364	208,379	216,714	225,382	234,398	243,774
Gas Domestic Revenues	-	-	-	-	-	-	-	-	-	-	-	-
Gas Export Revenues	357,623	367,636	377,930	393,047	408,769	425,120	442,125	459,810	478,202	497,330	517,224	537,912
Revenues	519,692	534,244	549,202	571,170	594,017	617,778	642,489	668,189	694,916	722,713	751,621	781,686
Wet Gas Feedstock Cost	-	-	-	-	-	-	-	-	-	-	-	-
Fixed O&M Cost	37,414	38,462	39,539	41,121	42,765	44,476	46,255	48,105	50,029	52,031	54,112	56,276
Transport Costs	395,026	406,087	417,457	434,155	451,522	469,582	488,366	507,900	528,216	549,345	571,319	594,172
Export Tariff	-	-	-	-	-	-	-	-	-	-	-	-
Road Tax	2,079	2,137	2,197	2,285	2,376	2,471	2,570	2,673	2,780	2,891	3,006	3,127
Operating Expenses	434,519	446,686	459,193	477,561	496,663	516,530	537,191	558,678	581,025	604,266	628,437	653,575
Operating Income	85,173	87,558	90,009	93,610	97,354	101,248	105,298	109,510	113,891	118,446	123,184	128,112
Plus: Interest Earnings	-	379	1,066	1,011	956	900	845	790	734	-	-	-
Plus: VAT Recovery	11,717	22,047	10,641	-	-	-	-	-	-	-	-	-
Less: Increase in Working Capital	5,795	294	302	444	462	480	499	519	540	562	584	607
Less: Income Taxes	-	-	-	-	-	2,118	7,376	29,392	35,942	37,903	39,419	40,996
Cash Available for Debt Service	91,096	109,689	101,415	94,177	97,848	99,550	98,268	80,388	78,143	79,982	83,181	86,508
Less: WB/Other Loan Interest Expense	31,830	28,139	24,449	20,759	17,068	13,378	9,687	5,997	2,307	-	-	-
Less: WB/Other Loan Principal	46,642	46,642	46,642	46,642	46,642	46,642	46,642	46,642	46,642	-	-	-
Cash Available for Reserves	12,624	34,908	30,324	26,776	34,138	39,530	41,938	27,749	29,194	79,982	83,181	86,508
Less: Increase in DS Reserve Fund	12,624	22,922	(1,845)	(1,845)	(1,845)	(1,845)	(1,845)	(1,845)	(24,474)	-	-	-
Less: Capital Expenditures	-	-	-	-	-	-	-	-	-	-	-	-
Distributable Cash	-	11,986	32,169	28,621	35,983	41,376	43,783	29,594	53,669	79,982	83,181	86,508
Cash Avail for CS Dividends	-	11,986	32,169	28,621	35,983	41,376	43,783	29,594	53,669	79,982	83,181	86,508
Plus: Additional Equity Investment	-	-	-	-	-	-	-	-	-	-	-	-
CS Dividends Payable	-	11,986	32,169	28,621	35,983	41,376	43,783	29,594	53,669	79,982	83,181	86,508
Less: CS Dividends	-	11,986	32,169	28,621	35,983	41,376	43,783	29,594	53,669	79,982	83,181	86,508
Net Cash Flow	-	-	-	-	-	-	-	-	-	-	-	-
Cumulative	-	-	-	-	-	-	-	-	-	-	-	-
DEBT SERVICE COVERAGE												
Cash Available for Debt Service	91,096	109,689	101,415	94,177	97,848	99,550	98,268	80,388	78,143	79,982	83,181	86,508
Debt Service (Principal & Interest)	78,472	74,782	71,091	67,401	63,710	60,020	56,330	52,639	48,949	-	-	-
Debt Service Coverage	116%	147%	143%	140%	154%	166%	174%	153%	160%	-	-	-
Minimum Debt Service Coverage	116%											
Average Debt Service Coverage	150%											

55

SIBERIAN GAS PROCESSING PLANT
Cash Flow Statement

($US Thousands)

	1998	1999	2000	2001	2002	2003	2004	2005	2006	2007	2008	2009
TAXABLE INCOME												
Operating Income	85,173	87,558	90,009	93,610	97,354	101,248	105,298	109,510	113,891	118,446	123,184	128,112
Plus: Interest Earnings	-	379	1,066	1,011	956	900	845	790	734	-	-	-
Less: Tax Depreciation & Amortization	89,503	89,503	89,503	89,503	84,846	75,532	50,355	-	-	-	-	-
Less: WB/Other Loan Interest Expense	31,830	28,139	24,449	20,759	17,068	13,378	9,687	5,997	2,307	-	-	-
Operating Profit	(36,160)	(29,706)	(22,876)	(15,641)	(3,604)	13,239	46,101	104,303	112,318	118,446	123,184	128,112
Less: Loss Carryforwards Used	-	-	-	-	-	6,619	23,051	12,452	-	-	-	-
Less: Reinvestment Deduction	-	-	-	-	-	-	-	-	-	-	-	-
Taxable Income	(36,160)	(29,706)	(22,876)	(15,641)	(3,604)	6,619	23,051	91,851	112,318	118,446	123,184	128,112
Less: Income Taxes	-	-	-	-	-	2,118	7,376	29,392	35,942	37,903	39,419	40,996
After Tax Income	(36,160)	(29,706)	(22,876)	(15,641)	(3,604)	4,501	15,674	62,459	76,377	80,543	83,765	87,116

Payback from Jan 1998 (Yrs)	6.4
Nominal NPV (Oct 1993) @ 15%	30,155

008

SIBERIAN GAS PROCESSING PLANT
Cash Flow Statement

($US Thousands)

	2010	2011	2012	2013	2014	2015	Total
DISTRIBUTABLE CASH							
NGL Domestic Revenues	-	-	-	-	-	-	-
NGL Export Revenues	253,525	263,666	274,212	285,181	296,588	308,451	4,066,611
Gas Domestic Revenues	-	-	-	-	-	-	-
Gas Export Revenues	559,429	581,806	605,078	629,282	654,453	680,631	8,973,408
Revenues	812,954	845,472	879,291	914,462	951,041	989,082	13,040,019
Wet Gas Feedstock Cost	-	-	-	-	-	-	-
Fixed O&M Cost	58,527	60,869	63,303	65,835	68,469	71,208	938,797
Transport Costs	617,938	642,656	668,362	695,097	722,901	751,817	9,911,917
Export Tariff	-	-	-	-	-	-	-
Road Tax	3,252	3,382	3,517	3,658	3,804	3,956	52,160
Operating Expenses	679,718	706,906	735,183	764,590	795,173	826,980	10,902,874
Operating Income	133,236	138,565	144,108	149,872	155,867	162,102	2,137,145
Plus: Interest Earnings	-	-	-	-	-	-	6,681
Plus: VAT Recovery	-	-	-	-	-	-	44,406
Less: Increase in Working Capital	632	657	683	711	739	(19,217)	(4,706)
Less: Income Taxes	42,636	44,341	46,115	47,959	49,878	51,873	475,946
Cash Available for Debt Service	89,969	93,567	97,310	101,203	105,251	129,446	1,716,991
Less: WB/Other Loan Interest Expense	-	-	-	-	-	-	153,613
Less: WB/Other Loan Principal	-	-	-	-	-	-	419,781
Cash Available for Reserves	89,969	93,567	97,310	101,203	105,251	129,446	1,143,597
Less: Increase in DS Reserve Fund	-	-	-	-	-	-	-
Less: Capital Expenditures	-	-	-	-	-	-	-
Distributable Cash	89,969	93,567	97,310	101,203	105,251	129,446	1,143,597
Cash Avail for CS Dividends	89,969	93,567	97,310	101,203	105,251	129,446	1,143,597
Plus: Additional Equity Investment	-	-	-	-	-	-	-
CS Dividends Payable	89,969	93,567	97,310	101,203	105,251	129,446	1,143,597
Less: CS Dividends	89,969	93,567	97,310	101,203	105,251	129,446	1,143,597
Net Cash Flow	-	-	-	-	-	-	-
Cumulative	-	-	-	-	-	-	
DEBT SERVICE COVERAGE							
Cash Available for Debt Service	89,969	93,567	97,310	101,203	105,251	129,446	1,716,991
Debt Service (Principal & Interest)	-	-	-	-	-	-	573,394
Debt Service Coverage	-	-	-	-	-	-	
Minimum Debt Service Coverage							
Average Debt Service Coverage							

SIBERIAN GAS PROCESSING PLANT
Cash Flow Statement

($US Thousands)

	2010	2011	2012	2013	2014	2015	Total
TAXABLE INCOME							
Operating Income	133,236	138,565	144,108	149,872	155,867	162,102	2,137,145
Plus: Interest Earnings	-	-	-	-	-	-	6,681
Less: Tax Depreciation & Amortization	-	-	-	-	-	-	568,746
Less: WB/Other Loan Interest Expense	-	-	-	-	-	-	153,613
Operating Profit	133,236	138,565	144,108	149,872	155,867	162,102	1,421,467
Less: Loss Carryforwards Used	-	-	-	-	-	-	42,122
Less: Reinvestment Deduction	-	-	-	-	-	-	-
Taxable Income	133,236	138,565	144,108	149,872	155,867	162,102	1,379,345
Less: Income Taxes	42,636	44,341	46,115	47,959	49,878	51,873	475,946
After Tax Income	90,600	94,224	97,993	101,913	105,990	110,229	903,399

Payback from Jan 1998 (Yrs)
Nominal NPV (Oct 1993) @ 15%

REVISED CASE 1B.1: Wet [illegible] = $0; Expected Tax

SIBERIAN GASS PROCESSING PLANT
Equity Returns

(Thousands)

	1994	1995	1996	1997	1998	1999	2000	2001	2002	2003	2004	2005	2006
EQUITY INVESTMENT													
SNGP Equity	-	7,349	18,130	5,791	-	-	-	-	-	-	-	-	-
PNG Equity	-	7,349	18,130	5,791	-	-	-	-	-	-	-	-	-
Gasprom Equity	-	7,349	18,130	5,791	-	-	-	-	-	-	-	-	-
Foreign Equity	-	22,046	54,391	17,374	-	-	-	-	-	-	-	-	-
Additional Equity	-	-	-	-	-	-	-	-	-	-	-	-	-
Total Equity	-	44,091	108,782	34,749	-	-	-	-	-	-	-	-	-
CUMULATIVE EQUITY INVESTMENT													
SNGP Equity Holdings	-	7,349	25,479	31,270	31,270	31,270	31,270	31,270	31,270	31,270	31,270	31,270	31,270
PNG Equity Holdings	-	7,349	25,479	31,270	31,270	31,270	31,270	31,270	31,270	31,270	31,270	31,270	31,270
Gasprom Equity Holdings	-	7,349	25,479	31,270	31,270	31,270	31,270	31,270	31,270	31,270	31,270	31,270	31,270
Foreign Equity Holdings	-	22,046	76,437	93,811	93,811	93,811	93,811	93,811	93,811	93,811	93,811	93,811	93,811
CS Equity Position	-	44,091	152,873	187,622	187,622	187,622	187,622	187,622	187,622	187,622	187,622	187,622	187,622
PROJECT RETURN ON EQUITY													
CS Dividends	-	-	-	-	-	11,986	32,169	28,621	35,983	41,376	43,783	29,594	53,669
Less: Equity Investment	-	44,091	108,782	34,749	-	-	-	-	-	-	-	-	-
Net Cash Flow	-	(44,091)	(108,782)	(34,749)	-	11,986	32,169	28,621	35,983	41,376	43,783	29,594	53,669
Cumulative	-	(44,091)	(152,873)	(187,622)	(187,622)	(175,636)	(143,467)	(114,846)	(78,863)	(37,487)	6,296	35,890	89,558
Real Net Cash Flow	-	(42,011)	(100,827)	(31,330)	-	10,226	26,698	22,840	27,611	30,527	31,061	20,188	35,202
Real Return on Equity	12.5%												

SIBERIAN GASS PROCESSING PLANT
Equity Returns

(Thousands)

	1994	1995	1996	1997	1998	1999	2000	2001	2002	2003	2004	2005	2006
SNGP RETURNS													
SNGP Share of Common Stock		17%	17%	17%	17%	17%	17%	17%	17%	17%	17%	17%	17%
CS Dividends	-	-	-	-	-	11,986	32,169	28,621	35,983	41,376	43,783	29,594	53,669
SNGP CS Dividends		-	-	-	-	1,998	5,361	4,770	5,997	6,896	7,297	4,932	8,945
SNGP CS Dividends		-	-	-	-	1,998	5,361	4,770	5,997	6,896	7,297	4,932	8,945
Plus: SNGP NGL Pipeline Marginal Profit	-	-	-	-	-	-	-	-	-	-	-	-	-
Less: SNGP Equity	-	7,349	18,130	5,791	-	-	-	-	-	-	-	-	-
SNGP Net Cash Flow	-	(7,349)	(18,130)	(5,791)	-	1,998	5,361	4,770	5,997	6,896	7,297	4,932	8,945
Real SNGP Net Cash Flow	-	(7,002)	(16,805)	(5,222)	-	1,704	4,450	3,807	4,602	5,088	5,177	3,365	5,867
SNGP Real Return on Equity	12.5%												
PNG RETURNS													
PNG Share of Common Stock		17%	17%	17%	17%	17%	17%	17%	17%	17%	17%	17%	17%
CS Dividends	-	-	-	-	-	11,986	32,169	28,621	35,983	41,376	43,783	29,594	53,669
PNG CS Dividends		-	-	-	-	1,998	5,361	4,770	5,997	6,896	7,297	4,932	8,945
PNG CS Dividends		-	-	-	-	1,998	5,361	4,770	5,997	6,896	7,297	4,932	8,945
Plus: PNG Wet Gas Marginal Profit	-	-	-	-	-	-	-	-	-	-	-	-	-
Less: PNG Equity	-	7,349	18,130	5,791	-	-	-	-	-	-	-	-	-
PNG Net Cash Flow	-	(7,349)	(18,130)	(5,791)	-	1,998	5,361	4,770	5,997	6,896	7,297	4,932	8,945
Real PNG Net Cash Flow	-	(7,002)	(16,805)	(5,222)	-	1,704	4,450	3,807	4,602	5,088	5,177	3,365	5,867
PNG Real Return on Equity	12.5%												
GASPROM RETURNS													
Gasprom Share of Common Stock		17%	17%	17%	17%	17%	17%	17%	17%	17%	17%	17%	17%
CS Dividends	-	-	-	-	-	11,986	32,169	28,621	35,983	41,376	43,783	29,594	53,669
Gasprom CS Dividends		-	-	-	-	1,998	5,361	4,770	5,997	6,896	7,297	4,932	8,945
Gasprom CS Dividends		-	-	-	-	1,998	5,361	4,770	5,997	6,896	7,297	4,932	8,945
Plus: Gasprom Transport Marginal Profit	-	-	-	-	-	-	-	-	-	-	-	-	-
Less: Gasprom Equity	-	7,349	18,130	5,791	-	-	-	-	-	-	-	-	-
Gasprom Net Cash Flow	-	(7,349)	(18,130)	(5,791)	-	1,998	5,361	4,770	5,997	6,896	7,297	4,932	8,945
Real Gasprom Net Cash Flow	-	(7,002)	(16,805)	(5,222)	-	1,704	4,450	3,807	4,602	5,088	5,177	3,365	5,867
Gasprom Real Return on Equity	12.5%												
FOREIGN INVESTOR RETURNS													
Foreign Share of Common Stock		50%	50%	50%	50%	50%	50%	50%	50%	50%	50%	50%	50%
CS Dividends	-	-	-	-	-	11,986	32,169	28,621	35,983	41,376	43,783	29,594	53,669
Foreign CS Dividends		-	-	-	-	5,993	16,084	14,311	17,991	20,688	21,892	14,797	26,834
Foreign CS Dividends		-	-	-	-	5,993	16,084	14,311	17,991	20,688	21,892	14,797	26,834
Less: Foreign Equity	-	22,046	54,391	17,374	-	-	-	-	-	-	-	-	-
Less: Additional Equity Investment	-	-	-	-	-	-	-	-	-	-	-	-	-
Foreign Net Cash Flow	-	(22,046)	(54,391)	(17,374)	-	5,993	16,084	14,311	17,991	20,688	21,892	14,797	26,834
Real Foreign Cash Flow	-	(21,005)	(50,414)	(15,665)	-	5,113	13,349	11,420	13,805	15,264	15,531	10,094	17,601
Foreign Real Return on Equity	12.5%												

SIBERIAN GASS PROCESSING PLANT
Equity Returns

(Thousands)

	2007	2008	2009	2010	2011	2012	2013	2014	2015	Total
EQUITY INVESTMENT										
SNGP Equity	-	-	-	-	-	-	-	-	-	31,270
PNG Equity	-	-	-	-	-	-	-	-	-	31,270
Gasprom Equity	-	-	-	-	-	-	-	-	-	31,270
Foreign Equity	-	-	-	-	-	-	-	-	-	93,811
Additional Equity	-	-	-	-	-	-	-	-	-	-
Total Equity	-	-	-	-	-	-	-	-	-	187,622
CUMULATIVE EQUITY INVESTMENT										
SNGP Equity Holdings	31,270	31,270	31,270	31,270	31,270	31,270	31,270	31,270	31,270	
PNG Equity Holdings	31,270	31,270	31,270	31,270	31,270	31,270	31,270	31,270	31,270	
Gasprom Equity Holdings	31,270	31,270	31,270	31,270	31,270	31,270	31,270	31,270	31,270	
Foreign Equity Holdings	93,811	93,811	93,811	93,811	93,811	93,811	93,811	93,811	93,811	
CS Equity Position	187,622	187,622	187,622	187,622	187,622	187,622	187,622	187,622	187,622	
PROJECT RETURN ON EQUITY										
CS Dividends	79,982	83,181	86,508	89,969	93,567	97,310	101,203	105,251	129,446	1,143,597
Less: Equity Investment	-	-	-	-	-	-	-	-	-	187,622
Net Cash Flow	79,982	83,181	86,508	89,969	93,567	97,310	101,203	105,251	129,446	955,975
Cumulative	169,540	252,721	339,230	429,198	522,766	620,076	721,279	826,529	955,975	
Real Net Cash Flow	50,443	50,443	50,443	50,443	50,443	50,443	50,443	50,443	59,653	493,386
Real Return on Equity										

REVISED CASE 1B.1: Wet = $0; Expected Tax

SIBERIAN GASS PROCESSING PLANT
Equity Returns

(Thousands)

	2007	2008	2009	2010	2011	2012	2013	2014	2015	Total
SNGP RETURNS										
SNGP Share of Common Stock	17%	17%	17%	17%	17%	17%	17%	17%	17%	
CS Dividends	79,982	83,181	86,508	89,969	93,567	97,310	101,203	105,251	129,446	1,143,597
SNGP CS Dividends	13,330	13,864	14,418	14,995	15,595	16,218	16,867	17,542	21,574	190,599
SNGP CS Dividends	13,330	13,864	14,418	14,995	15,595	16,218	16,867	17,542	21,574	190,599
Plus: SNGP NGL Pipeline Marginal Profit	-	-	-	-	-	-	-	-	-	-
Less: SNGP Equity	-	-	-	-	-	-	-	-	-	31,270
SNGP Net Cash Flow	13,330	13,864	14,418	14,995	15,595	16,218	16,867	17,542	21,574	159,329
Real SNGP Net Cash Flow	8,407	8,407	8,407	8,407	8,407	8,407	8,407	8,407	9,942	82,231
SNGP Real Return on Equity										
PNG RETURNS										
PNG Share of Common Stock	17%	17%	17%	17%	17%	17%	17%	17%	17%	
CS Dividends	79,982	83,181	86,508	89,969	93,567	97,310	101,203	105,251	129,446	1,143,597
PNG CS Dividends	13,330	13,864	14,418	14,995	15,595	16,218	16,867	17,542	21,574	190,599
PNG CS Dividends	13,330	13,864	14,418	14,995	15,595	16,218	16,867	17,542	21,574	190,599
Plus: PNG Wet Gas Marginal Profit	-	-	-	-	-	-	-	-	-	-
Less: PNG Equity	-	-	-	-	-	-	-	-	-	31,270
PNG Net Cash Flow	13,330	13,864	14,418	14,995	15,595	16,218	16,867	17,542	21,574	159,329
Real PNG Net Cash Flow	8,407	8,407	8,407	8,407	8,407	8,407	8,407	8,407	9,942	82,231
PNG Real Return on Equity										
GASPROM RETURNS										
Gasprom Share of Common Stock	17%	17%	17%	17%	17%	17%	17%	17%	17%	
CS Dividends	79,982	83,181	86,508	89,969	93,567	97,310	101,203	105,251	129,446	1,143,597
Gasprom CS Dividends	13,330	13,864	14,418	14,995	15,595	16,218	16,867	17,542	21,574	190,599
Gasprom CS Dividends	13,330	13,864	14,418	14,995	15,595	16,218	16,867	17,542	21,574	190,599
Plus: Gasprom Transport Marginal Profit	-	-	-	-	-	-	-	-	-	-
Less: Gasprom Equity	-	-	-	-	-	-	-	-	-	31,270
Gasprom Net Cash Flow	13,330	13,864	14,418	14,995	15,595	16,218	16,867	17,542	21,574	159,329
Real Gasprom Net Cash Flow	8,407	8,407	8,407	8,407	8,407	8,407	8,407	8,407	9,942	82,231
Gasprom Real Return on Equity										
FOREIGN INVESTOR RETURNS										
Foreign Share of Common Stock	50%	50%	50%	50%	50%	50%	50%	50%	50%	
CS Dividends	79,982	83,181	86,508	89,969	93,567	97,310	101,203	105,251	129,446	1,143,597
Foreign CS Dividends	39,991	41,591	43,254	44,984	46,784	48,655	50,601	52,625	64,723	571,798
Foreign CS Dividends	39,991	41,591	43,254	44,984	46,784	48,655	50,601	52,625	64,723	571,798
Less: Foreign Equity	-	-	-	-	-	-	-	-	-	93,811
Less: Additional Equity Investment	-	-	-	-	-	-	-	-	-	-
Foreign Net Cash Flow	39,991	41,591	43,254	44,984	46,784	48,655	50,601	52,625	64,723	477,988
Real Foreign Cash Flow	25,222	25,222	25,222	25,222	25,222	25,222	25,222	25,222	29,827	246,693
Foreign Real Return on Equity										

SIBERIAN GAS PROCESSING PLANT
Data and Key Results

TIMING DATA

Cost Estimate Month	Oct 93	First, Last Operation Month	Jan 96	Dec 15
Financial Closing Month	Jan 95	Economic Life	20.00	

ENGINEERING DATA

	1994	1995	1996	1997	1998	1999	2000	2001
Rated Capacity (BCM/yr) in 1996, 1998	2.14	4.28						
Stream Factor		-	100%	100%	100%	100%	100%	100%
Operations Partial Year Factor	-	-	1.000	1.000	1.000	100%	100%	100%
Wet Gas Processed (MCM)	-	-	2.14	2.14	4.28	4.28	4.28	4.28
Dry Gas Production (BCM)	-	-	1.80	1.91	3.76	3.76	3.76	3.76
NGL Production (MMTons)	-	-	0.36	0.49	1.07	1.07	1.07	1.07

REVENUE DATA (1996 $'s)

NGL Domestic Price ($/Ton)	84.82	Domestic Gas Price ($/MCM)	21.36
NGL Export Price ($/Ton)	180.00	Export Gas Price ($/MCM)	112.50
% NGL for Export	100%	% Dry Gas for Export	100%

OPERATING COST DATA (1993 $000's)

Wet Gas Feedstock Cost ($/MCM)	-	
Chemicals Cost	382	
Utility Cost	19,432	
Maintenance Cost	985	
Labor Cost, Benefits	1,364	518
Other Expenses	10,134	

TRANSPORT COSTS (1996 $'s)

	DOM	EXP
Dry Gas In-Russia Costs ($/MCM)	-	40.00
Dry Gas Export Costs		32.00
NGL In-Russia Costs ($/Ton)	1.94	36.55
NGL Pipeline Costs	43.52	43.52
NGL Port Loading Charge		1.62
NGL Shipping Cost		15.10

CAPITAL COST DATA (1993 $000's)

	1995	1996	1997	Total
Gubkinsky GPP Expansion	43,700	157,500	90,300	291,500
Tarasovsky Gas Processing Plant	-	-	-	-
Gas Gathering Systems Cost	17,900	53,700	40,200	111,800
Metering Facilities Cost	440	1,290	970	2,700
Contributed Assets	9,835	10,720	(4,543)	16,012
Other Owners Costs	8,000	-	-	8,000
Infrastructure Costs	9,306	31,874	19,721	60,900
Initial Working Capital	2,839	-	-	2,839
Capital Costs	92,020	255,084	146,647	493,751

WORKING CAPITAL DATA

Days Receivables	45
Days Payables	45

FINANCING DATA

	WB/Other Loan	
% of Permanent Financing	70%	
Loan Amount, Commitment	400,488	400,490
Loan Interest Rate	8.15%	
Start of Repayment, Repayment Period	Jan 98	9.0
Commitment Fees %	0.25%	
Upfront Fee %	-	
Other Fin Fees & Close Costs (%, Amt)	-	

KEY RESULTS SUMMARY

Real Return on Investment (no taxes)	40.0%
Unleveraged Payback (Yrs)	1.6
Nominal NPV (Oct '93) @ 15.0%	667,417
Real Return on Equity	49.8%
Leveraged Payback (Yrs)	1.3
Nominal NPV (Oct '93) @ 15.0%	435,183
Min Debt Service Coverage	241%
Average Debt Service Coverage	329%

FINANCING DATA (cont'd)

	Actual
Required Reserves (1st Operating Yr)	37,433
Cash Flow Dedicated to Reserves	100%
Reinvestment Rate	3.0%

TAX DATA

Tax & Book In Service Month	Jan 96
Profits Tax	32.00%
15% Yr SL Property %	100.0%
Carryforward Years	5
VAT Tax (% of CapEx)	20.0%
Property Tax (% of Fixed Assets)	-
Road Tax (% of Revenues)	0.4%
Dry Gas Export Tariff ('93 $/MCM)	-
NGL Export Tariff ('93 $/Ton)	-

ECONOMIC DATA

Global Inflation Rate	2.8% **
Capital Cost Esc Rate	2.8%
O&M Esc Rate	2.8%
Export Gas Price Esc Rate	2.8%
Domestic Gas Price Esc Rate	2.8%
Export NGL Price Esc Rate	2.8%
Domestic NGL Price Esc Rate	2.8%

** Until 2000, 4% thereafter
(all escalation equivalent to inflation)

SENSITIVITY ANALYSIS FACTORS

O&M Cost	1.00
Gas Price	1.25
NGL Price	1.25
Capital Cost	1.00
Transport Cost	1.00
Wet Gas Price	1.00

SIBERIAN GAS PROCESSING PLANT
Annual Sources and Uses of Funds During Construction

($US Thousands)

	1995	1996	1997	Total	%
SOURCES OF FUNDS					
World Bank/Other Loan	68,847	199,494	132,147	400,488	70%
SIBNG Cash Equity	-	-	-	-	-
PNG Cash Equity	-	-	-	-	-
Gasprom Cash Equity	4,918	5,360	(2,272)	8,006	1%
SIBNG Equity	4,918	5,360	(2,272)	8,006	1%
PNG Equity	4,918	5,360	(2,272)	8,006	1%
Foreign Equity	14,753	16,081	(6,815)	24,019	4%
JV Operating Cash Flow	-	53,336	70,264	123,601	22%
Total Sources of Funds	98,353	284,992	188,781	572,126	100%
USES OF FUNDS					
Gubkinsky GPP Expansion	45,950	169,606	99,266	314,821	
Tarasovsky Gas Processing Plant	-	-	-	-	
Gas Gathering Systems Cost	18,820	57,765	44,281	120,866	
Metering Facilities Costs	463	1,388	1,068	2,919	
Infrastructure Costs	9,785	34,314	21,692	65,791	
Contributed Assets	9,835	10,720	(4,543)	16,012	
Other Owners Costs	8,281	-	-	8,281	
Initial Working Capital	3,000	-	-	3,000	
Capital Costs	96,133	273,792	161,765	531,690	93%
Other Loan Interest	1,259	10,532	26,865	38,656	
Other Loan Commitment Fees	961	668	152	1,781	
Upfront Fees	-	-	-	-	
Financing Costs	2,219	11,200	27,017	40,436	7%
Total Uses of Funds	98,353	284,992	188,781	572,126	100%

	$	%
Total Debt	400,488	70%
Operating Cash	123,601	22%
Equity Requirement	48,037	8%
	572,126	100%

MEMORANDA	WB/Other Loan	
Loan Draws, Amount	400,488	
Standby Facility	-	
Constr Loan Draws + Standby, Commitment	400,488	400,490
Constr Loan Int Rate	8.15%	
Commitment Fee Rate	0.25%	
Upfront Fee Rate	-	
Other Financing Fees (%, Amt)	-	
Repayment Period	9.0	

** NOTE: ANNUAL SANDU STATEMENT IS FOR PRESENTATION ONLY. VALUES ARE FROM QUARTERLY CALCULATIONS.

VAT TAX FUNDING				
VAT Tax	15,003	52,614	33,262	100,879
VAT Recovery Expressed in $'s	435	8,945	30,692	40,072
Net VAT Payment	14,569	43,669	2,570	60,807
PNG Cash Equity for VAT	2,428	7,278	428	10,135
SNGP Cash Equity for VAT	2,428	7,278	428	10,135
Gasprom Cash Equity for VAT	2,428	7,278	428	10,135
Foreign Equity for VAT	7,284	21,834	1,285	30,404
Cash Equity for VAT	14,569	43,669	2,570	60,807

Equity Requirement	48,037
Equity for VAT	60,807
Total Equity	108,845

SIBERIAN GASS PROCESSING PLANT
Equity Returns

(Thousands)

	1994	1995	1996	1997	1998	1999	2000	2001	2002	2003	2004	2005	2006
EQUITY INVESTMENT													
SNGP Equity	-	7,346	12,638	(1,843)	-	-	-	-	-	-	-	-	-
PNG Equity	-	7,346	12,638	(1,843)	-	-	-	-	-	-	-	-	-
Gasprom Equity	-	7,346	12,638	(1,843)	-	-	-	-	-	-	-	-	-
Foreign Equity	-	22,037	37,915	(5,530)	-	-	-	-	-	-	-	-	-
Additional Equity	-	-	-	-	-	-	-	-	-	-	-	-	-
Total Equity	-	44,075	75,830	(11,060)	-	-	-	-	-	-	-	-	-
CUMULATIVE EQUITY INVESTMENT													
SNGP Equity Holdings	-	7,346	19,984	18,141	18,141	18,141	18,141	18,141	18,141	18,141	18,141	18,141	18,141
PNG Equity Holdings	-	7,346	19,984	18,141	18,141	18,141	18,141	18,141	18,141	18,141	18,141	18,141	18,141
Gasprom Equity Holdings	-	7,346	19,984	18,141	18,141	18,141	18,141	18,141	18,141	18,141	18,141	18,141	18,141
Foreign Equity Holdings	-	22,037	59,952	54,422	54,422	54,422	54,422	54,422	54,422	54,422	54,422	54,422	54,422
CS Equity Position	-	44,075	119,905	108,845	108,845	108,845	108,845	108,845	108,845	108,845	108,845	108,845	108,845
PROJECT RETURN ON EQUITY													
CS Dividends	-	-	-	-	68,233	140,152	133,488	131,016	138,254	144,256	145,888	140,180	171,579
Less: Equity Investment	-	44,075	75,830	(11,060)	-	-	-	-	-	-	-	-	-
Net Cash Flow	-	(44,075)	(75,830)	11,060	68,233	140,152	133,488	131,016	138,254	144,256	145,888	140,180	171,579
Cumulative	-	(44,075)	(119,905)	(108,845)	(40,612)	99,540	233,028	364,043	502,297	646,553	792,441	932,621	1,104,200
Real Net Cash Flow	-	(41,995)	(70,285)	9,972	59,845	119,575	110,787	104,553	106,086	106,434	103,498	95,624	112,541
Real Return on Equity	49.8%												

SIBERIAN GASS PROCESSING PLANT
Equity Returns

(Thousands)

	1994	1995	1996	1997	1998	1999	2000	2001	2002	2003	2004	2005	2006
SNGP RETURNS													
SNGP Share of Common Stock		17%	17%	17%	17%	17%	17%	17%	17%	17%	17%	17%	17%
CS Dividends	-	-	-	-	68,233	140,152	133,488	131,016	138,254	144,256	145,888	140,180	171,579
SNGP CS Dividends		-	-	-	11,372	23,359	22,248	21,836	23,042	24,043	24,315	23,363	28,597
SNGP CS Dividends		-	-	-	11,372	23,359	22,248	21,836	23,042	24,043	24,315	23,363	28,597
Plus: SNGP NGL Pipeline Marginal Profit	-	-	-	-	-	-	-	-	-	-	-	-	-
Less: SNGP Equity	-	7,346	12,638	(1,843)	-	-	-	-	-	-	-	-	-
SNGP Net Cash Flow	-	(7,346)	(12,638)	1,843	11,372	23,359	22,248	21,836	23,042	24,043	24,315	23,363	28,597
Real SNGP Net Cash Flow	-	(6,999)	(11,714)	1,662	9,974	19,929	18,464	17,425	17,681	17,739	17,250	15,937	18,757
SNGP Real Return on Equity	49.8%												
PNG RETURNS													
PNG Share of Common Stock		17%	17%	17%	17%	17%	17%	17%	17%	17%	17%	17%	17%
CS Dividends	-	-	-	-	68,233	140,152	133,488	131,016	138,254	144,256	145,888	140,180	171,579
PNG CS Dividends		-	-	-	11,372	23,359	22,248	21,836	23,042	24,043	24,315	23,363	28,597
PNG CS Dividends		-	-	-	11,372	23,359	22,248	21,836	23,042	24,043	24,315	23,363	28,597
Plus: PNG Wet Gas Marginal Profit	-	-	-	-	-	-	-	-	-	-	-	-	-
Less: PNG Equity	-	7,346	12,638	(1,843)	-	-	-	-	-	-	-	-	-
PNG Net Cash Flow	-	(7,346)	(12,638)	1,843	11,372	23,359	22,248	21,836	23,042	24,043	24,315	23,363	28,597
Real PNG Net Cash Flow	-	(6,999)	(11,714)	1,662	9,974	19,929	18,464	17,425	17,681	17,739	17,250	15,937	18,757
PNG Real Return on Equity	49.8%												
GASPROM RETURNS													
Gasprom Share of Common Stock		17%	17%	17%	17%	17%	17%	17%	17%	17%	17%	17%	17%
CS Dividends	-	-	-	-	68,233	140,152	133,488	131,016	138,254	144,256	145,888	140,180	171,579
Gasprom CS Dividends		-	-	-	11,372	23,359	22,248	21,836	23,042	24,043	24,315	23,363	28,597
Gasprom CS Dividends		-	-	-	11,372	23,359	22,248	21,836	23,042	24,043	24,315	23,363	28,597
Plus: Gasprom Transport Marginal Profit	-	-	-	-	-	-	-	-	-	-	-	-	-
Less: Gasprom Equity	-	7,346	12,638	(1,843)	-	-	-	-	-	-	-	-	-
Gasprom Net Cash Flow	-	(7,346)	(12,638)	1,843	11,372	23,359	22,248	21,836	23,042	24,043	24,315	23,363	28,597
Real Gasprom Net Cash Flow	-	(6,999)	(11,714)	1,662	9,974	19,929	18,464	17,425	17,681	17,739	17,250	15,937	18,757
Gasprom Real Return on Equity	49.8%												
FOREIGN INVESTOR RETURNS													
Foreign Share of Common Stock		50%	50%	50%	50%	50%	50%	50%	50%	50%	50%	50%	50%
CS Dividends	-	-	-	-	68,233	140,152	133,488	131,016	138,254	144,256	145,888	140,180	171,579
Foreign CS Dividends		-	-	-	34,116	70,076	66,744	65,508	69,127	72,128	72,944	70,090	85,790
Foreign CS Dividends		-	-	-	34,116	70,076	66,744	65,508	69,127	72,128	72,944	70,090	85,790
Less: Foreign Equity	-	22,037	37,915	(5,530)	-	-	-	-	-	-	-	-	-
Less: Additional Equity Investment	-	-	-	-	-	-	-	-	-	-	-	-	-
Foreign Net Cash Flow	-	(22,037)	(37,915)	5,530	34,116	70,076	66,744	65,508	69,127	72,128	72,944	70,090	85,790
Real Foreign Cash Flow	-	(20,998)	(35,142)	4,986	29,922	59,787	55,393	52,276	53,043	53,217	51,749	47,812	56,271
Foreign Real Return on Equity	49.8%												

018

REVISED CASE 1B.1: Wet Gas = $ [illegible]ected Tax; Revenues @ +25%

SIBERIAN GASS PROCESSING PLANT
Equity Returns

(Thousands)

	2007	2008	2009	2010	2011	2012	2013	2014	2015	Total
EQUITY INVESTMENT										
SNGP Equity	-	-	-	-	-	-	-	-	-	18,141
PNG Equity	-	-	-	-	-	-	-	-	-	18,141
Gasprom Equity	-	-	-	-	-	-	-	-	-	18,141
Foreign Equity	-	-	-	-	-	-	-	-	-	54,422
Additional Equity	-	-	-	-	-	-	-	-	-	-
Total Equity	-	-	-	-	-	-	-	-	-	108,845
CUMULATIVE EQUITY INVESTMENT										
SNGP Equity Holdings	18,141	18,141	18,141	18,141	18,141	18,141	18,141	18,141	18,141	
PNG Equity Holdings	18,141	18,141	18,141	18,141	18,141	18,141	18,141	18,141	18,141	
Gasprom Equity Holdings	18,141	18,141	18,141	18,141	18,141	18,141	18,141	18,141	18,141	
Foreign Equity Holdings	54,422	54,422	54,422	54,422	54,422	54,422	54,422	54,422	54,422	
CS Equity Position	108,845	108,845	108,845	108,845	108,845	108,845	108,845	108,845	108,845	
PROJECT RETURN ON EQUITY										
CS Dividends	201,498	209,558	217,941	226,658	235,724	245,153	254,960	265,158	326,113	3,395,809
Less: Equity Investment	-	-	-	-	-	-	-	-	-	108,845
Net Cash Flow	201,498	209,558	217,941	226,658	235,724	245,153	254,960	265,158	326,113	3,286,964
Cumulative	1,305,699	1,515,257	1,733,197	1,959,856	2,195,580	2,440,733	2,695,693	2,960,851	3,286,964	
Real Net Cash Flow	127,082	127,082	127,082	127,082	127,082	127,082	127,082	127,082	150,285	1,983,575
Real Return on Equity										

SIBERIAN GASS PROCESSING PLANT
Equity Returns
(Thousands)

	2007	2008	2009	2010	2011	2012	2013	2014	2015	Total
SNGP RETURNS										
SNGP Share of Common Stock	17%	17%	17%	17%	17%	17%	17%	17%	17%	
CS Dividends	201,498	209,558	217,941	226,658	235,724	245,153	254,960	265,158	326,113	3,395,809
SNGP CS Dividends	33,583	34,926	36,323	37,776	39,287	40,859	42,493	44,193	54,352	565,968
SNGP CS Dividends	33,583	34,926	36,323	37,776	39,287	40,859	42,493	44,193	54,352	565,968
Plus: SNGP NGL Pipeline Marginal Profit	-	-	-	-	-	-	-	-	-	-
Less: SNGP Equity	-	-	-	-	-	-	-	-	-	18,141
SNGP Net Cash Flow	33,583	34,926	36,323	37,776	39,287	40,859	42,493	44,193	54,352	547,827
Real SNGP Net Cash Flow	21,180	21,180	21,180	21,180	21,180	21,180	21,180	21,180	25,047	330,596
SNGP Real Return on Equity										
PNG RETURNS										
PNG Share of Common Stock	17%	17%	17%	17%	17%	17%	17%	17%	17%	
CS Dividends	201,498	209,558	217,941	226,658	235,724	245,153	254,960	265,158	326,113	3,395,809
PNG CS Dividends	33,583	34,926	36,323	37,776	39,287	40,859	42,493	44,193	54,352	565,968
PNG CS Dividends	33,583	34,926	36,323	37,776	39,287	40,859	42,493	44,193	54,352	565,968
Plus: PNG Wet Gas Marginal Profit	-	-	-	-	-	-	-	-	-	-
Less: PNG Equity	-	-	-	-	-	-	-	-	-	18,141
PNG Net Cash Flow	33,583	34,926	36,323	37,776	39,287	40,859	42,493	44,193	54,352	547,827
Real PNG Net Cash Flow	21,180	21,180	21,180	21,180	21,180	21,180	21,180	21,180	25,047	330,596
PNG Real Return on Equity										
GASPROM RETURNS										
Gasprom Share of Common Stock	17%	17%	17%	17%	17%	17%	17%	17%	17%	
CS Dividends	201,498	209,558	217,941	226,658	235,724	245,153	254,960	265,158	326,113	3,395,809
Gasprom CS Dividends	33,583	34,926	36,323	37,776	39,287	40,859	42,493	44,193	54,352	565,968
Gasprom CS Dividends	33,583	34,926	36,323	37,776	39,287	40,859	42,493	44,193	54,352	565,968
Plus: Gasprom Transport Marginal Profit	-	-	-	-	-	-	-	-	-	-
Less: Gasprom Equity	-	-	-	-	-	-	-	-	-	18,141
Gasprom Net Cash Flow	33,583	34,926	36,323	37,776	39,287	40,859	42,493	44,193	54,352	547,827
Real Gasprom Net Cash Flow	21,180	21,180	21,180	21,180	21,180	21,180	21,180	21,180	25,047	330,596
Gasprom Real Return on Equity										
FOREIGN INVESTOR RETURNS										
Foreign Share of Common Stock	50%	50%	50%	50%	50%	50%	50%	50%	50%	
CS Dividends	201,498	209,558	217,941	226,658	235,724	245,153	254,960	265,158	326,113	3,395,809
Foreign CS Dividends	100,749	104,779	108,970	113,329	117,862	122,577	127,480	132,579	163,056	1,697,904
Foreign CS Dividends	100,749	104,779	108,970	113,329	117,862	122,577	127,480	132,579	163,056	1,697,904
Less: Foreign Equity	-	-	-	-	-	-	-	-	-	54,422
Less: Additional Equity Investment	-	-	-	-	-	-	-	-	-	-
Foreign Net Cash Flow	100,749	104,779	108,970	113,329	117,862	122,577	127,480	132,579	163,056	1,643,482
Real Foreign Cash Flow	63,541	63,541	63,541	63,541	63,541	63,541	63,541	63,541	75,142	991,788
Foreign Real Return on Equity										

SIBERIAN GAS PROCESSING PLANT
Data and Key Results

TIMING DATA

Cost Estimate Month	Oct 93	First, Last Operation Month	Jan 96	Dec 15
Financial Closing Month	Jan 95	Economic Life	20.00	

ENGINEERING DATA

	1994	1995	1996	1997	1998	1999	2000	2001
Rated Capacity (BCM/yr)in 1996, 1998	2.14	4.28						
Stream Factor		-	100%	100%	100%	100%	100%	100%
Operations Partial Year Factor	-	-	1.000	1.000	1.000	100%	100%	100%
Wet Gas Processed (MCM)	-	-	2.14	2.14	4.28	4.28	4.28	4.28
Dry Gas Production (BCM)	-	-	1.80	1.91	3.76	3.76	3.76	3.76
NGL Production (MMTons)	-	-	0.36	0.49	1.07	1.07	1.07	1.07

REVENUE DATA (1996 $'s)

NGL Domestic Price ($/Ton)	61.07	Domestic Gas Price ($/MCM)	15.38
NGL Export Price ($/Ton)	129.60	Export Gas Price ($/MCM)	81.00
% NGL for Export	100%	% Dry Gas for Export	100%

OPERATING COST DATA (1993 $000's)

Wet Gas Feedstock Cost ($/MCM)	-	
Chemicals Cost	382	
Utility Cost	19,432	
Maintenance Cost	985	
Labor Cost, Benefits	1,364	518
Other Expenses	10,134	

TRANSPORT COSTS (1996 $'s)

	DOM	EXP
Dry Gas In-Russia Costs ($/MCM)	-	40.00
Dry Gas Export Costs		32.00
NGL In-Russia Costs ($/Ton)	1.94	36.55
NGL Pipeline Costs	43.52	43.52
NGL Port Loading Charge		1.62
NGL Shipping Cost		15.10

CAPITAL COST DATA (1993 $000's)

	1995	1996	1997	Total
Gubkinsky GPP Expansion	43,700	157,500	90,300	291,500
Tarasovsky Gas Processing Plant	-	-	-	-
Gas Gathering Systems Cost	17,900	53,700	40,200	111,800
Metering Facilities Cost	440	1,290	970	2,700
Contributed Assets	9,843	26,806	16,898	53,547
Other Owners Costs	8,000	-	-	8,000
Infrastructure Costs	9,306	31,874	19,721	60,900
Initial Working Capital	2,839	-	-	2,839
Capital Costs	92,028	271,169	168,089	531,286

WORKING CAPITAL DATA

Days Receivables	45
Days Payables	45

FINANCING DATA

	WB/Other	Loan
% of Permanent Financing	70%	
Loan Amount, Commitment	428,081	428,100
Loan Interest Rate	8.15%	
Start of Repayment, Repayment Period	Jan 98	9.0
Commitment Fees %	0.25%	
Upfront Fee %	-	
Other Fin Fees & Close Costs (%, Amt)	-	

KEY RESULTS SUMMARY

Real Return on Investment (no taxes)	2.0%
Unleveraged Payback (Yrs)	11.6
Nominal NPV (Oct '93) @ 15.0%	(163559)
Real Return on Equity	(5.2%)
Leveraged Payback (Yrs)	-
Nominal NPV (Oct '93) @ 15.0%	(179089)
Min Debt Service Coverage	53%
Average Debt Service Coverage	65%

FINANCING DATA (cont'd)

	Actual
Required Reserves (1st Operating Yr)	40,012
Cash Flow Dedicated to Reserves	100%
Reinvestment Rate	3.0%

TAX DATA

Tax & Book In Service Month	Jan 96
Profits Tax	32.00%
15% Yr SL Property %	100.0%
Carryforward Years	5
VAT Tax (% of CapEx)	20.0%
Property Tax (% of Fixed Assets)	-
Road Tax (% of Revenues)	0.4%
Dry Gas Export Tariff ('93 $/MCM)	-
NGL Export Tariff ('93 $/Ton)	-

ECONOMIC DATA

Global Inflation Rate	2.8% **
Capital Cost Esc Rate	2.8%
O&M Esc Rate	2.8%
Export Gas Price Esc Rate	2.8%
Domestic Gas Price Esc Rate	2.8%
Export NGL Price Esc Rate	2.8%
Domestic NGL Price Esc Rate	2.8%

** Until 2000, 4% thereafter
(all escalation equivalent to inflation)

SENSITIVITY ANALYSIS FACTORS

O&M Cost	1.00
Gas Price	0.90
NGL Price	0.90
Capital Cost	1.00
Transport Cost	1.00
Wet Gas Price	1.00

021

SIBERIAN GAS PROCESSING PLANT
Annual Sources and Uses of Funds During Construction

($US Thousands)

	1995	1996	1997	Total	%
SOURCES OF FUNDS					
World Bank/Other Loan	68,902	211,035	148,144	428,081	70%
SIBNG Cash Equity	-	-	-	-	-
PNG Cash Equity	-	-	-	-	-
Gasprom Cash Equity	4,922	13,403	8,449	26,774	4%
SIBNG Equity	4,922	13,403	8,449	26,774	4%
PNG Equity	4,922	13,403	8,449	26,774	4%
Foreign Equity	14,765	40,209	25,348	80,321	13%
JV Operating Cash Flow	-	10,026	12,795	22,821	4%
Total Sources of Funds	98,431	301,478	211,635	611,544	100%
USES OF FUNDS					
Gubkinsky GPP Expansion	45,950	169,606	99,266	314,821	
Tarasovsky Gas Processing Plant	-	-	-	-	
Gas Gathering Systems Cost	18,820	57,765	44,281	120,866	
Metering Facilities Costs	463	1,388	1,068	2,919	
Infrastructure Costs	9,785	34,314	21,692	65,791	
Contributed Assets	9,843	26,806	16,898	53,547	
Other Owners Costs	8,281	-	-	8,281	
Initial Working Capital	3,000	-	-	3,000	
Capital Costs	96,141	289,877	183,206	569,225	93%
Other Loan Interest	1,261	10,875	28,251	40,386	
Other Loan Commitment Fees	1,029	726	177	1,933	
Upfront Fees	-	-	-	-	
Financing Costs	2,290	11,601	28,428	42,319	7%
Total Uses of Funds	98,431	301,478	211,635	611,544	100%

	$	%
Total Debt	428,081	70%
Operating Cash	22,821	4%
Equity Requirement	160,642	26%
	611,544	100%

MEMORANDA	WB/Other Loan	
Loan Draws, Amount	428,081	
Standby Facility	-	
Constr Loan Draws + Standby, Commitment	428,081	428,100
Constr Loan Int Rate	8.15%	
Commitment Fee Rate	0.25%	
Upfront Fee Rate	-	
Other Financing Fees (%, Amt)	-	
Repayment Period	9.0	

** NOTE: ANNUAL SANDU STATEMENT IS FOR PRESENTATION ONLY. VALUES ARE FROM QUARTERLY CALCULATIONS.

VAT TAX FUNDING				
VAT Tax	15,003	52,614	33,262	100,879
VAT Recovery Expressed in $'s	435	8,945	30,692	40,072
Net VAT Payment	14,569	43,669	2,570	60,807
PNG Cash Equity for VAT	2,428	7,278	428	10,135
SNGP Cash Equity for VAT	2,428	7,278	428	10,135
Gasprom Cash Equity for VAT	2,428	7,278	428	10,135
Foreign Equity for VAT	7,284	21,834	1,285	30,404
Cash Equity for VAT	14,569	43,669	2,570	60,807

Equity Requirement	160,642
Equity for VAT	60,807
Total Equity	221,450

SIBERIAN GASS PROCESSING PLANT
Equity Returns

(Thousands)

	1994	1995	1996	1997	1998	1999	2000	2001	2002	2003	2004	2005	2006
EQUITY INVESTMENT													
SNGP Equity	-	7,350	20,681	8,878	-	-	-	-	-	-	-	-	-
PNG Equity	-	7,350	20,681	8,878	-	-	-	-	-	-	-	-	-
Gasprom Equity	-	7,350	20,681	8,878	-	-	-	-	-	-	-	-	-
Foreign Equity	-	22,049	62,043	26,633	-	-	-	-	-	-	-	-	-
Additional Equity	-	-	-	-	37,354	19,981	26,665	32,186	26,961	21,677	16,333	16,820	12,223
Total Equity	-	44,098	124,086	53,265	37,354	19,981	26,665	32,186	26,961	21,677	16,333	16,820	12,223
CUMULATIVE EQUITY INVESTMENT													
SNGP Equity Holdings	-	7,350	28,031	36,908	36,908	36,908	36,908	36,908	36,908	36,908	36,908	36,908	36,908
PNG Equity Holdings	-	7,350	28,031	36,908	36,908	36,908	36,908	36,908	36,908	36,908	36,908	36,908	36,908
Gasprom Equity Holdings	-	7,350	28,031	36,908	36,908	36,908	36,908	36,908	36,908	36,908	36,908	36,908	36,908
Foreign Equity Holdings	-	22,049	84,092	110,725	148,078	168,060	194,725	226,911	253,872	275,550	291,882	308,702	320,926
CS Equity Position	-	44,098	168,185	221,450	258,803	278,785	305,450	337,636	364,597	386,274	402,607	419,427	431,651
PROJECT RETURN ON EQUITY													
CS Dividends	-	-	-	-	-	-	-	-	-	-	-	-	-
Less: Equity Investment	-	44,098	124,086	53,265	37,354	19,981	26,665	32,186	26,961	21,677	16,333	16,820	12,223
Net Cash Flow	-	(44,098)	(124,086)	(53,265)	(37,354)	(19,981)	(26,665)	(32,186)	(26,961)	(21,677)	(16,333)	(16,820)	(12,223)
Cumulative	-	(44,098)	(168,185)	(221,450)	(258,803)	(278,785)	(305,450)	(337,636)	(364,597)	(386,274)	(402,607)	(419,427)	(431,651)
Real Net Cash Flow	-	(42,018)	(115,012)	(48,025)	(32,762)	(17,048)	(22,130)	(25,685)	(20,688)	(15,994)	(11,587)	(11,474)	(8,018)
Real Return on Equity	(5.2%)												

SIBERIAN GASS PROCESSING PLANT
Equity Returns
(Thousands)

	1994	1995	1996	1997	1998	1999	2000	2001	2002	2003	2004	2005	2006
SNGP RETURNS													
SNGP Share of Common Stock		17%	17%	17%	14%	13%	12%	11%	10%	10%	9%	9%	9%
CS Dividends	-	-	-	-	-	-	-	-	-	-	-	-	-
SNGP CS Dividends		-	-	-	-	-	-	-	-	-	-	-	-
SNGP CS Dividends		-	-	-	-	-	-	-	-	-	-	-	-
Plus: SNGP NGL Pipeline Marginal Profit	-	-	-	-	-	-	-	-	-	-	-	-	-
Less: SNGP Equity	-	7,350	20,681	8,878	-	-	-	-	-	-	-	-	-
SNGP Net Cash Flow	-	(7,350)	(20,681)	(8,878)	-	-	-	-	-	-	-	-	-
Real SNGP Net Cash Flow	-	(7,003)	(19,169)	(8,004)	-	-	-	-	-	-	-	-	-
SNGP Real Return on Equity	#ARITH												
PNG RETURNS													
PNG Share of Common Stock		17%	17%	17%	14%	13%	12%	11%	10%	10%	9%	9%	9%
CS Dividends	-	-	-	-	-	-	-	-	-	-	-	-	-
PNG CS Dividends		-	-	-	-	-	-	-	-	-	-	-	-
PNG CS Dividends		-	-	-	-	-	-	-	-	-	-	-	-
Plus: PNG Wet Gas Marginal Profit	-	-	-	-	-	-	-	-	-	-	-	-	-
Less: PNG Equity	-	7,350	20,681	8,878	-	-	-	-	-	-	-	-	-
PNG Net Cash Flow	-	(7,350)	(20,681)	(8,878)	-	-	-	-	-	-	-	-	-
Real PNG Net Cash Flow	-	(7,003)	(19,169)	(8,004)	-	-	-	-	-	-	-	-	-
PNG Real Return on Equity	(4.9%)												
GASPROM RETURNS													
Gasprom Share of Common Stock		17%	17%	17%	14%	13%	12%	11%	10%	10%	9%	9%	9%
CS Dividends	-	-	-	-	-	-	-	-	-	-	-	-	-
Gasprom CS Dividends		-	-	-	-	-	-	-	-	-	-	-	-
Gasprom CS Dividends		-	-	-	-	-	-	-	-	-	-	-	-
Plus: Gasprom Transport Marginal Profit	-	-	-	-	-	-	-	-	-	-	-	-	-
Less: Gasprom Equity	-	7,350	20,681	8,878	-	-	-	-	-	-	-	-	-
Gasprom Net Cash Flow	-	(7,350)	(20,681)	(8,878)	-	-	-	-	-	-	-	-	-
Real Gasprom Net Cash Flow	-	(7,003)	(19,169)	(8,004)	-	-	-	-	-	-	-	-	-
Gasprom Real Return on Equity	#ARITH												
FOREIGN INVESTOR RETURNS													
Foreign Share of Common Stock		50%	50%	50%	57%	60%	64%	67%	70%	71%	72%	74%	74%
CS Dividends	-	-	-	-	-	-	-	-	-	-	-	-	-
Foreign CS Dividends		-	-	-	-	-	-	-	-	-	-	-	-
Foreign CS Dividends		-	-	-	-	-	-	-	-	-	-	-	-
Less: Foreign Equity	-	22,049	62,043	26,633	-	-	-	-	-	-	-	-	-
Less: Additional Equity Investment	-	-	-	-	37,354	19,981	26,665	32,186	26,961	21,677	16,333	16,820	12,223
Foreign Net Cash Flow	-	(22,049)	(62,043)	(26,633)	(37,354)	(19,981)	(26,665)	(32,186)	(26,961)	(21,677)	(16,333)	(16,820)	(12,223)
Real Foreign Cash Flow	-	(21,009)	(57,506)	(24,013)	(32,762)	(17,048)	(22,130)	(25,685)	(20,688)	(15,994)	(11,587)	(11,474)	(8,018)
Foreign Real Return on Equity	(5.4%)												

SIBERIAN GASS PROCESSING PLANT
Equity Returns

(Thousands)

	2007	2008	2009	2010	2011	2012	2013	2014	2015	Total
EQUITY INVESTMENT										
SNGP Equity	-	-	-	-	-	-	-	-	-	36,908
PNG Equity	-	-	-	-	-	-	-	-	-	36,908
Gasprom Equity	-	-	-	-	-	-	-	-	-	36,908
Foreign Equity	-	-	-	-	-	-	-	-	-	110,725
Additional Equity	-	-	-	-	-	-	-	-	-	210,201
Total Equity	-	-	-	-	-	-	-	-	-	431,651
CUMULATIVE EQUITY INVESTMENT										
SNGP Equity Holdings	36,908	36,908	36,908	36,908	36,908	36,908	36,908	36,908	36,908	
PNG Equity Holdings	36,908	36,908	36,908	36,908	36,908	36,908	36,908	36,908	36,908	
Gasprom Equity Holdings	36,908	36,908	36,908	36,908	36,908	36,908	36,908	36,908	36,908	
Foreign Equity Holdings	320,926	320,926	320,926	320,926	320,926	320,926	320,926	320,926	320,926	
CS Equity Position	431,651	431,651	431,651	431,651	431,651	431,651	431,651	431,651	431,651	
PROJECT RETURN ON EQUITY										
CS Dividends	38,810	35,360	33,935	35,293	36,705	38,173	39,700	41,288	50,779	350,042
Less: Equity Investment	-	-	-	-	-	-	-	-	-	431,651
Net Cash Flow	38,810	35,360	33,935	35,293	36,705	38,173	39,700	41,288	50,779	(81,608)
Cumulative	(392,841)	(357,481)	(323,545)	(288,252)	(251,548)	(213,375)	(173,675)	(132,387)	(81,608)	
Real Net Cash Flow	24,477	21,444	19,788	19,788	19,788	19,788	19,788	19,788	23,401	(182,391)
Real Return on Equity										

SIBERIAN GASS PROCESSING PLANT
Equity Returns
(Thousands)

	2007	2008	2009	2010	2011	2012	2013	2014	2015	Total
SNGP RETURNS										
SNGP Share of Common Stock	9%	9%	9%	9%	9%	9%	9%	9%	9%	
CS Dividends	38,810	35,360	33,935	35,293	36,705	38,173	39,700	41,288	50,779	350,042
SNGP CS Dividends	3,318	3,023	2,902	3,018	3,138	3,264	3,395	3,530	4,342	29,930
SNGP CS Dividends	3,318	3,023	2,902	3,018	3,138	3,264	3,395	3,530	4,342	29,930
Plus: SNGP NGL Pipeline Marginal Profit	-	-	-	-	-	-	-	-	-	-
Less: SNGP Equity	-	-	-	-	-	-	-	-	-	36,908
SNGP Net Cash Flow	3,318	3,023	2,902	3,018	3,138	3,264	3,395	3,530	4,342	(6,978)
Real SNGP Net Cash Flow	2,093	1,834	1,692	1,692	1,692	1,692	1,692	1,692	2,001	(18,097)
SNGP Real Return on Equity										
PNG RETURNS										
PNG Share of Common Stock	9%	9%	9%	9%	9%	9%	9%	9%	9%	
CS Dividends	38,810	35,360	33,935	35,293	36,705	38,173	39,700	41,288	50,779	350,042
PNG CS Dividends	3,318	3,023	2,902	3,018	3,138	3,264	3,395	3,530	4,342	29,930
PNG CS Dividends	3,318	3,023	2,902	3,018	3,138	3,264	3,395	3,530	4,342	29,930
Plus: PNG Wet Gas Marginal Profit	-	-	-	-	-	-	-	-	-	-
Less: PNG Equity	-	-	-	-	-	-	-	-	-	36,908
PNG Net Cash Flow	3,318	3,023	2,902	3,018	3,138	3,264	3,395	3,530	4,342	(6,978)
Real PNG Net Cash Flow	2,093	1,834	1,692	1,692	1,692	1,692	1,692	1,692	2,001	(18,097)
PNG Real Return on Equity										
GASPROM RETURNS										
Gasprom Share of Common Stock	9%	9%	9%	9%	9%	9%	9%	9%	9%	
CS Dividends	38,810	35,360	33,935	35,293	36,705	38,173	39,700	41,288	50,779	350,042
Gasprom CS Dividends	3,318	3,023	2,902	3,018	3,138	3,264	3,395	3,530	4,342	29,930
Gasprom CS Dividends	3,318	3,023	2,902	3,018	3,138	3,264	3,395	3,530	4,342	29,930
Plus: Gasprom Transport Marginal Profit	-	-	-	-	-	-	-	-	-	-
Less: Gasprom Equity	-	-	-	-	-	-	-	-	-	36,908
Gasprom Net Cash Flow	3,318	3,023	2,902	3,018	3,138	3,264	3,395	3,530	4,342	(6,978)
Real Gasprom Net Cash Flow	2,093	1,834	1,692	1,692	1,692	1,692	1,692	1,692	2,001	(18,097)
Gasprom Real Return on Equity										
FOREIGN INVESTOR RETURNS										
Foreign Share of Common Stock	74%	74%	74%	74%	74%	74%	74%	74%	74%	
CS Dividends	38,810	35,360	33,935	35,293	36,705	38,173	39,700	41,288	50,779	350,042
Foreign CS Dividends	28,854	26,290	25,231	26,240	27,289	28,381	29,516	30,697	37,753	260,251
Foreign CS Dividends	28,854	26,290	25,231	26,240	27,289	28,381	29,516	30,697	37,753	260,251
Less: Foreign Equity	-	-	-	-	-	-	-	-	-	110,725
Less: Additional Equity Investment	-	-	-	-	-	-	-	-	-	210,201
Foreign Net Cash Flow	28,854	26,290	25,231	26,240	27,289	28,381	29,516	30,697	37,753	(60,675)
Real Foreign Cash Flow	18,198	15,943	14,712	14,712	14,712	14,712	14,712	14,712	17,398	(128,101)
Foreign Real Return on Equity										

026

SIBERIAN GAS PROCESSING PLANT
Data and Key Results

TIMING DATA

Cost Estimate Month	Oct 93	First, Last Operation Month	Jan 96 Dec 15
Financial Closing Month	Jan 95	Economic Life	20.00

ENGINEERING DATA

	1994	1995	1996	1997	1998	1999	2000	2001
Rated Capacity (BCM/yr) in 1996, 1998	2.14	4.28						
Stream Factor	-	-	100%	100%	100%	100%	100%	100%
Operations Partial Year Factor	-	-	1.000	1.000	1.000	100%	100%	100%
Wet Gas Processed (MCM)	-	-	2.14	2.14	4.28	4.28	4.28	4.28
Dry Gas Production (BCM)	-	-	1.80	1.91	3.76	3.76	3.76	3.76
NGL Production (MMTons)	-	-	0.36	0.49	1.07	1.07	1.07	1.07

REVENUE DATA (1996 $'s)

NGL Domestic Price ($/Ton)	67.86	Domestic Gas Price ($/MCM)	21.36
NGL Export Price ($/Ton)	144.00	Export Gas Price ($/MCM)	112.50
% NGL for Export	100%	% Dry Gas for Export	100%

OPERATING COST DATA (1993 $000's)

Wet Gas Feedstock Cost ($/MCM)	-	
Chemicals Cost	382	
Utility Cost	19,432	
Maintenance Cost	985	
Labor Cost, Benefits	1,364	518
Other Expenses	10,134	

TRANSPORT COSTS (1996 $'s)

	DOM	EXP
Dry Gas In-Russia Costs ($/MCM)	-	40.00
Dry Gas Export Costs		32.00
NGL In-Russia Costs ($/Ton)	1.94	36.55
NGL Pipeline Costs	43.52	43.52
NGL Port Loading Charge		1.62
NGL Shipping Cost		15.10

CAPITAL COST DATA (1993 $000's)

	1995	1996	1997	Total
Gubkinsky GPP Expansion	43,700	157,500	90,300	291,500
Tarasovsky Gas Processing Plant	-	-	-	-
Gas Gathering Systems Cost	17,900	53,700	40,200	111,800
Metering Facilities Cost	440	1,290	970	2,700
Contributed Assets	9,837	13,352	(249)	22,940
Other Owners Costs	8,000	-	-	8,000
Infrastructure Costs	9,306	31,874	19,721	60,900
Initial Working Capital	2,839	-	-	2,839
Capital Costs	92,021	257,716	150,942	500,679

WORKING CAPITAL DATA

Days Receivables	45
Days Payables	45

FINANCING DATA

	WB/Other Loan	
% of Permanent Financing	70%	
Loan Amount, Commitment	405,567	405,570
Loan Interest Rate	8.15%	
Start of Repayment, Repayment Period	Jan 98	9.0
Commitment Fees %	0.25%	
Upfront Fee %	-	
Other Fin Fees & Close Costs (%, Amt)	-	

KEY RESULTS SUMMARY

Real Return on Investment (no taxes)	32.6%
Unleveraged Payback (Yrs)	2.1
Nominal NPV (Oct '93) @ 15.0%	485,476
Real Return on Equity	38.6%
Leveraged Payback (Yrs)	1.8
Nominal NPV (Oct '93) @ 15.0%	310,363
Min Debt Service Coverage	206%
Average Debt Service Coverage	273%

FINANCING DATA (cont'd)

	Actual
Required Reserves (1st Operating Yr)	37,908
Cash Flow Dedicated to Reserves	100%
Reinvestment Rate	3.0%

TAX DATA

Tax & Book In Service Month	Jan 96
Profits Tax	32.00%
15% Yr SL Property %	100.0%
Carryforward Years	5
VAT Tax (% of CapEx)	20.0%
Property Tax (% of Fixed Assets)	-
Road Tax (% of Revenues)	0.4%
Dry Gas Export Tariff ('93 $/MCM)	-
NGL Export Tariff ('93 $/Ton)	-

ECONOMIC DATA

Global Inflation Rate	2.8% **
Capital Cost Esc Rate	2.8%
O&M Esc Rate	2.8%
Export Gas Price Esc Rate	2.8%
Domestic Gas Price Esc Rate	2.8%
Export NGL Price Esc Rate	2.8%
Domestic NGL Price Esc Rate	2.8%

** Until 2000, 4% thereafter
(all escalation equivalent to inflation)

SENSITIVITY ANALYSIS FACTORS

O&M Cost	1.00
Gas Price	1.25
NGL Price	1.00
Capital Cost	1.00
Transport Cost	1.00
Wet Gas Price	1.00

027

SIBERIAN GAS PROCESSING PLANT
Annual Sources and Uses of Funds During Construction

($US Thousands)

	1995	1996	1997	Total	%
SOURCES OF FUNDS					
World Bank/Other Loan	68,857	201,384	135,327	405,567	70%
SIBNG Cash Equity	-	-	-	-	-
PNG Cash Equity	-	-	-	-	-
Gasprom Cash Equity	4,918	6,676	(124)	11,470	2%
SIBNG Equity	4,918	6,676	(124)	11,470	2%
PNG Equity	4,918	6,676	(124)	11,470	2%
Foreign Equity	14,755	20,029	(373)	34,411	6%
JV Operating Cash Flow	-	46,250	58,742	104,993	18%
Total Sources of Funds	98,367	287,691	193,324	579,382	100%
USES OF FUNDS					
Gubkinsky GPP Expansion	45,950	169,606	99,266	314,821	
Tarasovsky Gas Processing Plant	-	-	-	-	
Gas Gathering Systems Cost	18,820	57,765	44,281	120,866	
Metering Facilities Costs	463	1,388	1,068	2,919	
Infrastructure Costs	9,785	34,314	21,692	65,791	
Contributed Assets	9,837	13,352	(249)	22,940	
Other Owners Costs	8,281	-	-	8,281	
Initial Working Capital	3,000	-	-	3,000	
Capital Costs	96,135	276,424	166,059	538,617	93%
Other Loan Interest	1,259	10,588	27,108	38,956	
Other Loan Commitment Fees	973	679	157	1,809	
Upfront Fees	-	-	-	-	
Financing Costs	2,232	11,267	27,265	40,765	7%
Total Uses of Funds	98,367	287,691	193,324	579,382	100%

	$	%
Total Debt	405,567	70%
Operating Cash	104,993	18%
Equity Requirement	68,822	12%
	579,382	100%

MEMORANDA	WB/Other Loan	
Loan Draws, Amount	405,567	
Standby Facility	-	
Constr Loan Draws + Standby, Commitment	405,567	405,570
Constr Loan Int Rate	8.15%	
Commitment Fee Rate	0.25%	
Upfront Fee Rate	-	
Other Financing Fees (%, Amt)	-	
Repayment Period	9.0	

** NOTE: ANNUAL SANDU STATEMENT IS FOR PRESENTATION ONLY. VALUES ARE FROM QUARTERLY CALCULATIONS.

VAT TAX FUNDING				
VAT Tax	15,003	52,614	33,262	100,879
VAT Recovery Expressed in $'s	435	8,945	30,692	40,072
Net VAT Payment	14,569	43,669	2,570	60,807
PNG Cash Equity for VAT	2,428	7,278	428	10,135
SNGP Cash Equity for VAT	2,428	7,278	428	10,135
Gasprom Cash Equity for VAT	2,428	7,278	428	10,135
Foreign Equity for VAT	7,284	21,834	1,285	30,404
Cash Equity for VAT	14,569	43,669	2,570	60,807

Equity Requirement	68,822
Equity for VAT	60,807
Total Equity	129,629

SIBERIAN GASS PROCESSING PLANT
Equity Returns

(Thousands)

	1994	1995	1996	1997	1998	1999	2000	2001	2002	2003	2004	2005	2006
EQUITY INVESTMENT													
SNGP Equity	-	7,346	13,954	304	-	-	-	-	-	-	-	-	-
PNG Equity	-	7,346	13,954	304	-	-	-	-	-	-	-	-	-
Gasprom Equity	-	7,346	13,954	304	-	-	-	-	-	-	-	-	-
Foreign Equity	-	22,039	41,863	912	-	-	-	-	-	-	-	-	-
Additional Equity	-	-	-	-	-	-	-	-	-	-	-	-	-
Total Equity	-	44,079	83,726	1,825	-	-	-	-	-	-	-	-	-
CUMULATIVE EQUITY INVESTMENT													
SNGP Equity Holdings	-	7,346	21,301	21,605	21,605	21,605	21,605	21,605	21,605	21,605	21,605	21,605	21,605
PNG Equity Holdings	-	7,346	21,301	21,605	21,605	21,605	21,605	21,605	21,605	21,605	21,605	21,605	21,605
Gasprom Equity Holdings	-	7,346	21,301	21,605	21,605	21,605	21,605	21,605	21,605	21,605	21,605	21,605	21,605
Foreign Equity Holdings	-	22,039	63,902	64,815	64,815	64,815	64,815	64,815	64,815	64,815	64,815	64,815	64,815
CS Equity Position	-	44,079	127,805	129,629	129,629	129,629	129,629	129,629	129,629	129,629	129,629	129,629	129,629
PROJECT RETURN ON EQUITY													
CS Dividends	-	-	-	-	42,610	111,688	104,245	100,710	106,780	111,566	111,816	104,558	134,860
Less: Equity Investment	-	44,079	83,726	1,825	-	-	-	-	-	-	-	-	-
Net Cash Flow	-	(44,079)	(83,726)	(1,825)	42,610	111,688	104,245	100,710	106,780	111,566	111,816	104,558	134,860
Cumulative	-	(44,079)	(127,805)	(129,629)	(87,020)	24,668	128,913	229,623	336,403	447,970	559,786	664,344	799,204
Real Net Cash Flow	-	(41,999)	(77,603)	(1,645)	37,372	95,290	86,517	80,368	81,935	82,315	79,327	71,324	88,456
Real Return on Equity	38.6%												

029

SIBERIAN GASS PROCESSING PLANT
Equity Returns
(Thousands)

	1994	1995	1996	1997	1998	1999	2000	2001	2002	2003	2004	2005	2006
SNGP RETURNS													
SNGP Share of Common Stock		17%	17%	17%	17%	17%	17%	17%	17%	17%	17%	17%	17%
CS Dividends	-	-	-	-	42,610	111,688	104,245	100,710	106,780	111,566	111,816	104,558	134,860
SNGP CS Dividends		-	-	-	7,102	18,615	17,374	16,785	17,797	18,594	18,636	17,426	22,477
SNGP CS Dividends		-	-	-	7,102	18,615	17,374	16,785	17,797	18,594	18,636	17,426	22,477
Plus: SNGP NGL Pipeline Marginal Profit	-	-	-	-	-	-	-	-	-	-	-	-	-
Less: SNGP Equity	-	7,346	13,954	304	-	-	-	-	-	-	-	-	-
SNGP Net Cash Flow	-	(7,346)	(13,954)	(304)	7,102	18,615	17,374	16,785	17,797	18,594	18,636	17,426	22,477
Real SNGP Net Cash Flow	-	(7,000)	(12,934)	(274)	6,229	15,882	14,420	13,395	13,656	13,719	13,221	11,887	14,743
SNGP Real Return on Equity	38.6%												
PNG RETURNS													
PNG Share of Common Stock		17%	17%	17%	17%	17%	17%	17%	17%	17%	17%	17%	17%
CS Dividends	-	-	-	-	42,610	111,688	104,245	100,710	106,780	111,566	111,816	104,558	134,860
PNG CS Dividends		-	-	-	7,102	18,615	17,374	16,785	17,797	18,594	18,636	17,426	22,477
PNG CS Dividends		-	-	-	7,102	18,615	17,374	16,785	17,797	18,594	18,636	17,426	22,477
Plus: PNG Wet Gas Marginal Profit	-	-	-	-	-	-	-	-	-	-	-	-	-
Less: PNG Equity	-	7,346	13,954	304	-	-	-	-	-	-	-	-	-
PNG Net Cash Flow	-	(7,346)	(13,954)	(304)	7,102	18,615	17,374	16,785	17,797	18,594	18,636	17,426	22,477
Real PNG Net Cash Flow	-	(7,000)	(12,934)	(274)	6,229	15,882	14,420	13,395	13,656	13,719	13,221	11,887	14,743
PNG Real Return on Equity	38.6%												
GASPROM RETURNS													
Gasprom Share of Common Stock		17%	17%	17%	17%	17%	17%	17%	17%	17%	17%	17%	17%
CS Dividends	-	-	-	-	42,610	111,688	104,245	100,710	106,780	111,566	111,816	104,558	134,860
Gasprom CS Dividends		-	-	-	7,102	18,615	17,374	16,785	17,797	18,594	18,636	17,426	22,477
Gasprom CS Dividends		-	-	-	7,102	18,615	17,374	16,785	17,797	18,594	18,636	17,426	22,477
Plus: Gasprom Transport Marginal Profit	-	-	-	-	-	-	-	-	-	-	-	-	-
Less: Gasprom Equity	-	7,346	13,954	304	-	-	-	-	-	-	-	-	-
Gasprom Net Cash Flow	-	(7,346)	(13,954)	(304)	7,102	18,615	17,374	16,785	17,797	18,594	18,636	17,426	22,477
Real Gasprom Net Cash Flow	-	(7,000)	(12,934)	(274)	6,229	15,882	14,420	13,395	13,656	13,719	13,221	11,887	14,743
Gasprom Real Return on Equity	38.6%												
FOREIGN INVESTOR RETURNS													
Foreign Share of Common Stock		50%	50%	50%	50%	50%	50%	50%	50%	50%	50%	50%	50%
CS Dividends	-	-	-	-	42,610	111,688	104,245	100,710	106,780	111,566	111,816	104,558	134,860
Foreign CS Dividends		-	-	-	21,305	55,844	52,123	50,355	53,390	55,783	55,908	52,279	67,430
Foreign CS Dividends		-	-	-	21,305	55,844	52,123	50,355	53,390	55,783	55,908	52,279	67,430
Less: Foreign Equity	-	22,039	41,863	912	-	-	-	-	-	-	-	-	-
Less: Additional Equity Investment	-	-	-	-	-	-	-	-	-	-	-	-	-
Foreign Net Cash Flow	-	(22,039)	(41,863)	(912)	21,305	55,844	52,123	50,355	53,390	55,783	55,908	52,279	67,430
Real Foreign Cash Flow	-	(21,000)	(38,802)	(823)	18,686	47,645	43,259	40,184	40,967	41,158	39,663	35,662	44,228
Foreign Real Return on Equity	38.6%												

SIBERIAN GASS PROCESSING PLANT
Equity Returns

(Thousands)

	2007	2008	2009	2010	2011	2012	2013	2014	2015	Total
EQUITY INVESTMENT										
SNGP Equity	-	-	-	-	-	-	-	-	-	21,605
PNG Equity	-	-	-	-	-	-	-	-	-	21,605
Gasprom Equity	-	-	-	-	-	-	-	-	-	21,605
Foreign Equity	-	-	-	-	-	-	-	-	-	64,815
Additional Equity	-	-	-	-	-	-	-	-	-	-
Total Equity	-	-	-	-	-	-	-	-	-	129,629
CUMULATIVE EQUITY INVESTMENT										
SNGP Equity Holdings	21,605	21,605	21,605	21,605	21,605	21,605	21,605	21,605	21,605	
PNG Equity Holdings	21,605	21,605	21,605	21,605	21,605	21,605	21,605	21,605	21,605	
Gasprom Equity Holdings	21,605	21,605	21,605	21,605	21,605	21,605	21,605	21,605	21,605	
Foreign Equity Holdings	64,815	64,815	64,815	64,815	64,815	64,815	64,815	64,815	64,815	
CS Equity Position	129,629	129,629	129,629	129,629	129,629	129,629	129,629	129,629	129,629	
PROJECT RETURN ON EQUITY										
CS Dividends	163,603	170,147	176,953	184,031	191,392	199,048	207,009	215,290	264,781	2,701,086
Less: Equity Investment	-	-	-	-	-	-	-	-	-	129,629
Net Cash Flow	163,603	170,147	176,953	184,031	191,392	199,048	207,009	215,290	264,781	2,571,457
Cumulative	962,807	1,132,954	1,309,906	1,493,937	1,685,329	1,884,376	2,091,386	2,306,676	2,571,457	
Real Net Cash Flow	103,182	103,182	103,182	103,182	103,182	103,182	103,182	103,182	122,021	1,529,132
Real Return on Equity										

SIBERIAN GASS PROCESSING PLANT
Equity Returns

(Thousands)

	2007	2008	2009	2010	2011	2012	2013	2014	2015	Total
SNGP RETURNS										
SNGP Share of Common Stock	17%	17%	17%	17%	17%	17%	17%	17%	17%	
CS Dividends	163,603	170,147	176,953	184,031	191,392	199,048	207,009	215,290	264,781	2,701,086
SNGP CS Dividends	27,267	28,358	29,492	30,672	31,899	33,175	34,502	35,882	44,130	450,181
SNGP CS Dividends	27,267	28,358	29,492	30,672	31,899	33,175	34,502	35,882	44,130	450,181
Plus: SNGP NGL Pipeline Marginal Profit	-	-	-	-	-	-	-	-	-	-
Less: SNGP Equity	-	-	-	-	-	-	-	-	-	21,605
SNGP Net Cash Flow	27,267	28,358	29,492	30,672	31,899	33,175	34,502	35,882	44,130	428,576
Real SNGP Net Cash Flow	17,197	17,197	17,197	17,197	17,197	17,197	17,197	17,197	20,337	254,855
SNGP Real Return on Equity										
PNG RETURNS										
PNG Share of Common Stock	17%	17%	17%	17%	17%	17%	17%	17%	17%	
CS Dividends	163,603	170,147	176,953	184,031	191,392	199,048	207,009	215,290	264,781	2,701,086
PNG CS Dividends	27,267	28,358	29,492	30,672	31,899	33,175	34,502	35,882	44,130	450,181
PNG CS Dividends	27,267	28,358	29,492	30,672	31,899	33,175	34,502	35,882	44,130	450,181
Plus: PNG Wet Gas Marginal Profit	-	-	-	-	-	-	-	-	-	-
Less: PNG Equity	-	-	-	-	-	-	-	-	-	21,605
PNG Net Cash Flow	27,267	28,358	29,492	30,672	31,899	33,175	34,502	35,882	44,130	428,576
Real PNG Net Cash Flow	17,197	17,197	17,197	17,197	17,197	17,197	17,197	17,197	20,337	254,855
PNG Real Return on Equity										
GASPROM RETURNS										
Gasprom Share of Common Stock	17%	17%	17%	17%	17%	17%	17%	17%	17%	
CS Dividends	163,603	170,147	176,953	184,031	191,392	199,048	207,009	215,290	264,781	2,701,086
Gasprom CS Dividends	27,267	28,358	29,492	30,672	31,899	33,175	34,502	35,882	44,130	450,181
Gasprom CS Dividends	27,267	28,358	29,492	30,672	31,899	33,175	34,502	35,882	44,130	450,181
Plus: Gasprom Transport Marginal Profit	-	-	-	-	-	-	-	-	-	-
Less: Gasprom Equity	-	-	-	-	-	-	-	-	-	21,605
Gasprom Net Cash Flow	27,267	28,358	29,492	30,672	31,899	33,175	34,502	35,882	44,130	428,576
Real Gasprom Net Cash Flow	17,197	17,197	17,197	17,197	17,197	17,197	17,197	17,197	20,337	254,855
Gasprom Real Return on Equity										
FOREIGN INVESTOR RETURNS										
Foreign Share of Common Stock	50%	50%	50%	50%	50%	50%	50%	50%	50%	
CS Dividends	163,603	170,147	176,953	184,031	191,392	199,048	207,009	215,290	264,781	2,701,086
Foreign CS Dividends	81,801	85,073	88,476	92,015	95,696	99,524	103,505	107,645	132,391	1,350,543
Foreign CS Dividends	81,801	85,073	88,476	92,015	95,696	99,524	103,505	107,645	132,391	1,350,543
Less: Foreign Equity	-	-	-	-	-	-	-	-	-	64,815
Less: Additional Equity Investment	-	-	-	-	-	-	-	-	-	-
Foreign Net Cash Flow	81,801	85,073	88,476	92,015	95,696	99,524	103,505	107,645	132,391	1,285,728
Real Foreign Cash Flow	51,591	51,591	51,591	51,591	51,591	51,591	51,591	51,591	61,010	764,566
Foreign Real Return on Equity										

SIBERIAN GAS PROCESSING PLANT
Data and Key Results

TIMING DATA

Cost Estimate Month	Oct 93	First, Last Operation Month	Jan 96	Dec 15
Financial Closing Month	Jan 95	Economic Life	20.00	

ENGINEERING DATA

	1994	1995	1996	1997	1998	1999	2000	2001
Rated Capacity (BCM/yr)in 1996, 1998	2.14	4.28						
Stream Factor		-	100%	100%	100%	100%	100%	100%
Operations Partial Year Factor	-	-	1.000	1.000	1.000	100%	100%	100%
Wet Gas Processed (MCM)	-	-	2.14	2.14	4.28	4.28	4.28	4.28
Dry Gas Production (BCM)	-	-	1.80	1.91	3.76	3.76	3.76	3.76
NGL Production (MMTons)	-	-	0.36	0.49	1.07	1.07	1.07	1.07

REVENUE DATA (1996 $'s)

NGL Domestic Price ($/Ton)	67.86	Domestic Gas Price ($/MCM)	14.53
NGL Export Price ($/Ton)	144.00	Export Gas Price ($/MCM)	76.50
% NGL for Export	100%	% Dry Gas for Export	100%

OPERATING COST DATA (1993 $000's)

Wet Gas Feedstock Cost ($/MCM)	-	
Chemicals Cost	382	
Utility Cost	19,432	
Maintenance Cost	985	
Labor Cost, Benefits	1,364	518
Other Expenses	10,134	

TRANSPORT COSTS (1996 $'s)

	DOM	EXP
Dry Gas In-Russia Costs ($/MCM)	-	40.00
Dry Gas Export Costs		32.00
NGL In-Russia Costs ($/Ton)	1.94	36.55
NGL Pipeline Costs	43.52	43.52
NGL Port Loading Charge		1.62
NGL Shipping Cost		15.10

CAPITAL COST DATA (1993 $000's)

	1995	1996	1997	Total
Gubkinsky GPP Expansion	43,700	157,500	90,300	291,500
Tarasovsky Gas Processing Plant	-	-	-	-
Gas Gathering Systems Cost	17,900	53,700	40,200	111,800
Metering Facilities Cost	440	1,290	970	2,700
Contributed Assets	9,843	27,778	17,571	55,193
Other Owners Costs	8,000	-	-	8,000
Infrastructure Costs	9,306	31,874	19,721	60,900
Initial Working Capital	2,839	-	-	2,839
Capital Costs	92,028	272,142	168,761	532,932

WORKING CAPITAL DATA

Days Receivables	45
Days Payables	45

FINANCING DATA

	WB/Other Loan	
% of Permanent Financing	70%	
Loan Amount, Commitment	429,301	429,305
Loan Interest Rate	8.15%	
Start of Repayment, Repayment Period	Jan 98	9.0
Commitment Fees %	0.25%	
Upfront Fee %	-	
Other Fin Fees & Close Costs (%, Amt)	-	

KEY RESULTS SUMMARY

Real Return on Investment (no taxes)		1.4%
Unleveraged Payback (Yrs)		12.1
Nominal NPV (Oct '93) @	15.0%	(173105)
Real Return on Equity		(6.0%)
Leveraged Payback (Yrs)		-
Nominal NPV (Oct '93) @	15.0%	(188425)
Min Debt Service Coverage		50%
Average Debt Service Coverage		62%

FINANCING DATA (cont'd)

	Actual
Required Reserves (1st Operating Yr)	40,126
Cash Flow Dedicated to Reserves	100%
Reinvestment Rate	3.0%

TAX DATA

Tax & Book In Service Month	Jan 96
Profits Tax	32.00%
15% Yr SL Property %	100.0%
Carryforward Years	5
VAT Tax (% of CapEx)	20.0%
Property Tax (% of Fixed Assets)	-
Road Tax (% of Revenues)	0.4%
Dry Gas Export Tariff ('93 $/MCM)	-
NGL Export Tariff ('93 $/Ton)	-

ECONOMIC DATA

Global Inflation Rate	2.8% **
Capital Cost Esc Rate	2.8%
O&M Esc Rate	2.8%
Export Gas Price Esc Rate	2.8%
Domestic Gas Price Esc Rate	2.8%
Export NGL Price Esc Rate	2.8%
Domestic NGL Price Esc Rate	2.8%

** Until 2000, 4% thereafter
(all escalation equivalent to inflation)

SENSITIVITY ANALYSIS FACTORS

O&M Cost	1.00
Gas Price	0.85
NGL Price	1.00
Capital Cost	1.00
Transport Cost	1.00
Wet Gas Price	1.00

033

SIBERIAN GAS PROCESSING PLANT
Annual Sources and Uses of Funds During Construction

($US Thousands)

	1995	1996	1997	Total	%
SOURCES OF FUNDS					
World Bank/Other Loan	68,904	211,732	148,665	429,301	70%
SIBNG Cash Equity	-	-	-	-	-
PNG Cash Equity	-	-	-	-	-
Gasprom Cash Equity	4,922	13,889	8,785	27,596	4%
SIBNG Equity	4,922	13,889	8,785	27,596	4%
PNG Equity	4,922	13,889	8,785	27,596	4%
Foreign Equity	14,765	41,668	26,356	82,789	13%
JV Operating Cash Flow	-	7,407	11,001	18,407	3%
Total Sources of Funds	98,434	302,474	212,378	613,287	100%
USES OF FUNDS					
Gubkinsky GPP Expansion	45,950	169,606	99,266	314,821	
Tarasovsky Gas Processing Plant	-	-	-	-	
Gas Gathering Systems Cost	18,820	57,765	44,281	120,866	
Metering Facilities Costs	463	1,388	1,068	2,919	
Infrastructure Costs	9,785	34,314	21,692	65,791	
Contributed Assets	9,843	27,778	17,571	55,193	
Other Owners Costs	8,281	-	-	8,281	
Initial Working Capital	3,000	-	-	3,000	
Capital Costs	96,141	290,850	183,879	570,870	93%
Other Loan Interest	1,261	10,895	28,321	40,477	
Other Loan Commitment Fees	1,032	728	178	1,939	
Upfront Fees	-	-	-	-	
Financing Costs	2,293	11,624	28,500	42,416	7%
Total Uses of Funds	98,434	302,474	212,378	613,287	100%

	$	%
Total Debt	429,301	70%
Operating Cash	18,407	3%
Equity Requirement	165,579	27%
	613,287	100%

MEMORANDA	WB/Other Loan	
Loan Draws, Amount	429,301	
Standby Facility	-	
Constr Loan Draws + Standby, Commitment	429,301	429,305
Constr Loan Int Rate	8.15%	
Commitment Fee Rate	0.25%	
Upfront Fee Rate	-	
Other Financing Fees (%, Amt)	-	
Repayment Period	9.0	

** NOTE: ANNUAL SANDU STATEMENT IS FOR PRESENTATION ONLY. VALUES ARE FROM QUARTERLY CALCULATIONS.

VAT TAX FUNDING				
VAT Tax	15,003	52,614	33,262	100,879
VAT Recovery Expressed in $'s	435	8,945	30,692	40,072
Net VAT Payment	14,569	43,669	2,570	60,807
PNG Cash Equity for VAT	2,428	7,278	428	10,135
SNGP Cash Equity for VAT	2,428	7,278	428	10,135
Gasprom Cash Equity for VAT	2,428	7,278	428	10,135
Foreign Equity for VAT	7,284	21,834	1,285	30,404
Cash Equity for VAT	14,569	43,669	2,570	60,807

Equity Requirement	165,579
Equity for VAT	60,807
Total Equity	226,386

034

SIBERIAN GASS PROCESSING PLANT
Equity Returns

(Thousands)

	1994	1995	1996	1997	1998	1999	2000	2001	2002	2003	2004	2005	2006
EQUITY INVESTMENT													
SNGP Equity	-	7,350	21,167	9,214	-	-	-	-	-	-	-	-	-
PNG Equity	-	7,350	21,167	9,214	-	-	-	-	-	-	-	-	-
Gasprom Equity	-	7,350	21,167	9,214	-	-	-	-	-	-	-	-	-
Foreign Equity	-	22,050	63,502	27,641	-	-	-	-	-	-	-	-	-
Additional Equity	-	-	-	-	39,244	21,907	28,628	34,206	29,043	23,825	18,548	18,761	14,227
Total Equity	-	44,099	127,004	55,283	39,244	21,907	28,628	34,206	29,043	23,825	18,548	18,761	14,227
CUMULATIVE EQUITY INVESTMENT													
SNGP Equity Holdings	-	7,350	28,517	37,731	37,731	37,731	37,731	37,731	37,731	37,731	37,731	37,731	37,731
PNG Equity Holdings	-	7,350	28,517	37,731	37,731	37,731	37,731	37,731	37,731	37,731	37,731	37,731	37,731
Gasprom Equity Holdings	-	7,350	28,517	37,731	37,731	37,731	37,731	37,731	37,731	37,731	37,731	37,731	37,731
Foreign Equity Holdings	-	22,050	85,552	113,193	152,437	174,344	202,972	237,178	266,222	290,046	308,595	327,355	341,582
CS Equity Position	-	44,099	171,103	226,386	265,630	287,537	316,165	350,371	379,415	403,239	421,788	440,548	454,775
PROJECT RETURN ON EQUITY													
CS Dividends	-	-	-	-	-	-	-	-	-	-	-	-	-
Less: Equity Investment	-	44,099	127,004	55,283	39,244	21,907	28,628	34,206	29,043	23,825	18,548	18,761	14,227
Net Cash Flow	-	(44,099)	(127,004)	(55,283)	(39,244)	(21,907)	(28,628)	(34,206)	(29,043)	(23,825)	(18,548)	(18,761)	(14,227)
Cumulative	-	(44,099)	(171,103)	(226,386)	(265,630)	(287,537)	(316,165)	(350,371)	(379,415)	(403,239)	(421,788)	(440,548)	(454,775)
Real Net Cash Flow	-	(42,019)	(117,716)	(49,844)	(34,420)	(18,691)	(23,759)	(27,297)	(22,286)	(17,578)	(13,159)	(12,798)	(9,332)
Real Return on Equity	(6.0%)												

1695

035

SIBERIAN GASS PROCESSING PLANT
Equity Returns

(Thousands)

	1994	1995	1996	1997	1998	1999	2000	2001	2002	2003	2004	2005	2006
SNGP RETURNS													
SNGP Share of Common Stock		17%	17%	17%	14%	13%	12%	11%	10%	9%	9%	9%	8%
CS Dividends	-	-	-	-	-	-	-	-	-	-	-	-	-
SNGP CS Dividends		-	-	-	-	-	-	-	-	-	-	-	-
SNGP CS Dividends		-	-	-	-	-	-	-	-	-	-	-	-
Plus: SNGP NGL Pipeline Marginal Profit	-	-	-	-	-	-	-	-	-	-	-	-	-
Less: SNGP Equity	-	7,350	21,167	9,214	-	-	-	-	-	-	-	-	-
SNGP Net Cash Flow	-	(7,350)	(21,167)	(9,214)	-	-	-	-	-	-	-	-	-
Real SNGP Net Cash Flow	-	(7,003)	(19,619)	(8,307)	-	-	-	-	-	-	-	-	-
SNGP Real Return on Equity	#ARITH												
PNG RETURNS													
PNG Share of Common Stock		17%	17%	17%	14%	13%	12%	11%	10%	9%	9%	9%	8%
CS Dividends	-	-	-	-	-	-	-	-	-	-	-	-	-
PNG CS Dividends		-	-	-	-	-	-	-	-	-	-	-	-
PNG CS Dividends		-	-	-	-	-	-	-	-	-	-	-	-
Plus: PNG Wet Gas Marginal Profit	-	-	-	-	-	-	-	-	-	-	-	-	-
Less: PNG Equity	-	7,350	21,167	9,214	-	-	-	-	-	-	-	-	-
PNG Net Cash Flow	-	(7,350)	(21,167)	(9,214)	-	-	-	-	-	-	-	-	-
Real PNG Net Cash Flow	-	(7,003)	(19,619)	(8,307)	-	-	-	-	-	-	-	-	-
PNG Real Return on Equity	(5.5%)												
GASPROM RETURNS													
Gasprom Share of Common Stock		17%	17%	17%	14%	13%	12%	11%	10%	9%	9%	9%	8%
CS Dividends	-	-	-	-	-	-	-	-	-	-	-	-	-
Gasprom CS Dividends		-	-	-	-	-	-	-	-	-	-	-	-
Gasprom CS Dividends		-	-	-	-	-	-	-	-	-	-	-	-
Plus: Gasprom Transport Marginal Profit	-	-	-	-	-	-	-	-	-	-	-	-	-
Less: Gasprom Equity	-	7,350	21,167	9,214	-	-	-	-	-	-	-	-	-
Gasprom Net Cash Flow	-	(7,350)	(21,167)	(9,214)	-	-	-	-	-	-	-	-	-
Real Gasprom Net Cash Flow	-	(7,003)	(19,619)	(8,307)	-	-	-	-	-	-	-	-	-
Gasprom Real Return on Equity	#ARITH												
FOREIGN INVESTOR RETURNS													
Foreign Share of Common Stock		50%	50%	50%	57%	61%	64%	68%	70%	72%	73%	74%	75%
CS Dividends	-	-	-	-	-	-	-	-	-	-	-	-	-
Foreign CS Dividends		-	-	-	-	-	-	-	-	-	-	-	-
Foreign CS Dividends		-	-	-	-	-	-	-	-	-	-	-	-
Less: Foreign Equity	-	22,050	63,502	27,641	-	-	-	-	-	-	-	-	-
Less: Additional Equity Investment	-	-	-	-	39,244	21,907	28,628	34,206	29,043	23,825	18,548	18,761	14,227
Foreign Net Cash Flow	-	(22,050)	(63,502)	(27,641)	(39,244)	(21,907)	(28,628)	(34,206)	(29,043)	(23,825)	(18,548)	(18,761)	(14,227)
Real Foreign Cash Flow	-	(21,009)	(58,858)	(24,922)	(34,420)	(18,691)	(23,759)	(27,297)	(22,286)	(17,578)	(13,159)	(12,798)	(9,332)
Foreign Real Return on Equity	#ARITH												

SIBERIAN GASS PROCESSING PLANT
Equity Returns

(Thousands)

	2007	2008	2009	2010	2011	2012	2013	2014	2015	Total
EQUITY INVESTMENT										
SNGP Equity	-	-	-	-	-	-	-	-	-	37,731
PNG Equity	-	-	-	-	-	-	-	-	-	37,731
Gasprom Equity	-	-	-	-	-	-	-	-	-	37,731
Foreign Equity	-	-	-	-	-	-	-	-	-	113,193
Additional Equity	-	-	-	-	-	-	-	-	-	228,390
Total Equity	-	-	-	-	-	-	-	-	-	454,775
CUMULATIVE EQUITY INVESTMENT										
SNGP Equity Holdings	37,731	37,731	37,731	37,731	37,731	37,731	37,731	37,731	37,731	
PNG Equity Holdings	37,731	37,731	37,731	37,731	37,731	37,731	37,731	37,731	37,731	
Gasprom Equity Holdings	37,731	37,731	37,731	37,731	37,731	37,731	37,731	37,731	37,731	
Foreign Equity Holdings	341,582	341,582	341,582	341,582	341,582	341,582	341,582	341,582	341,582	
CS Equity Position	454,775	454,775	454,775	454,775	454,775	454,775	454,775	454,775	454,775	
PROJECT RETURN ON EQUITY										
CS Dividends	36,873	36,261	32,242	33,531	34,873	36,268	37,718	39,227	48,245	335,238
Less: Equity Investment	-	-	-	-	-	-	-	-	-	454,775
Net Cash Flow	36,873	36,261	32,242	33,531	34,873	36,268	37,718	39,227	48,245	(119,538)
Cumulative	(417,903)	(381,642)	(349,400)	(315,868)	(280,995)	(244,728)	(207,009)	(167,782)	(119,538)	
Real Net Cash Flow	23,255	21,990	18,800	18,800	18,800	18,800	18,800	18,800	22,233	(208,618)
Real Return on Equity										

SIBERIAN GASS PROCESSING PLANT
Equity Returns

(Thousands)

	2007	2008	2009	2010	2011	2012	2013	2014	2015	Total
SNGP RETURNS										
SNGP Share of Common Stock	8%	8%	8%	8%	8%	8%	8%	8%	8%	
CS Dividends	36,873	36,261	32,242	33,531	34,873	36,268	37,718	39,227	48,245	335,238
SNGP CS Dividends	3,059	3,008	2,675	2,782	2,893	3,009	3,129	3,255	4,003	27,813
SNGP CS Dividends	3,059	3,008	2,675	2,782	2,893	3,009	3,129	3,255	4,003	27,813
Plus: SNGP NGL Pipeline Marginal Profit	-	-	-	-	-	-	-	-	-	-
Less: SNGP Equity	-	-	-	-	-	-	-	-	-	37,731
SNGP Net Cash Flow	3,059	3,008	2,675	2,782	2,893	3,009	3,129	3,255	4,003	(9,918)
Real SNGP Net Cash Flow	1,929	1,824	1,560	1,560	1,560	1,560	1,560	1,560	1,845	(19,973)
SNGP Real Return on Equity										
PNG RETURNS										
PNG Share of Common Stock	8%	8%	8%	8%	8%	8%	8%	8%	8%	
CS Dividends	36,873	36,261	32,242	33,531	34,873	36,268	37,718	39,227	48,245	335,238
PNG CS Dividends	3,059	3,008	2,675	2,782	2,893	3,009	3,129	3,255	4,003	27,813
PNG CS Dividends	3,059	3,008	2,675	2,782	2,893	3,009	3,129	3,255	4,003	27,813
Plus: PNG Wet Gas Marginal Profit	-	-	-	-	-	-	-	-	-	-
Less: PNG Equity	-	-	-	-	-	-	-	-	-	37,731
PNG Net Cash Flow	3,059	3,008	2,675	2,782	2,893	3,009	3,129	3,255	4,003	(9,918)
Real PNG Net Cash Flow	1,929	1,824	1,560	1,560	1,560	1,560	1,560	1,560	1,845	(19,973)
PNG Real Return on Equity										
GASPROM RETURNS										
Gasprom Share of Common Stock	8%	8%	8%	8%	8%	8%	8%	8%	8%	
CS Dividends	36,873	36,261	32,242	33,531	34,873	36,268	37,718	39,227	48,245	335,238
Gasprom CS Dividends	3,059	3,008	2,675	2,782	2,893	3,009	3,129	3,255	4,003	27,813
Gasprom CS Dividends	3,059	3,008	2,675	2,782	2,893	3,009	3,129	3,255	4,003	27,813
Plus: Gasprom Transport Marginal Profit	-	-	-	-	-	-	-	-	-	-
Less: Gasprom Equity	-	-	-	-	-	-	-	-	-	37,731
Gasprom Net Cash Flow	3,059	3,008	2,675	2,782	2,893	3,009	3,129	3,255	4,003	(9,918)
Real Gasprom Net Cash Flow	1,929	1,824	1,560	1,560	1,560	1,560	1,560	1,560	1,845	(19,973)
Gasprom Real Return on Equity										
FOREIGN INVESTOR RETURNS										
Foreign Share of Common Stock	75%	75%	75%	75%	75%	75%	75%	75%	75%	
CS Dividends	36,873	36,261	32,242	33,531	34,873	36,268	37,718	39,227	48,245	335,238
Foreign CS Dividends	27,695	27,236	24,217	25,186	26,193	27,241	28,330	29,464	36,237	251,798
Foreign CS Dividends	27,695	27,236	24,217	25,186	26,193	27,241	28,330	29,464	36,237	251,798
Less: Foreign Equity	-	-	-	-	-	-	-	-	-	113,193
Less: Additional Equity Investment	-	-	-	-	-	-	-	-	-	228,390
Foreign Net Cash Flow	27,695	27,236	24,217	25,186	26,193	27,241	28,330	29,464	36,237	(89,785)
Real Foreign Cash Flow	17,467	16,517	14,121	14,121	14,121	14,121	14,121	14,121	16,699	(148,700)
Foreign Real Return on Equity										

SIBERIAN GAS PROCESSING PLANT
Data and Key Results

TIMING DATA

Cost Estimate Month	Oct 93	First, Last Operation Month	Jan 96 Dec 15
Financial Closing Month	Jan 95	Economic Life	20.00

ENGINEERING DATA

	1994	1995	1996	1997	1998	1999	2000	2001
Rated Capacity (BCM/yr) in 1996, 1998	2.14	4.28						
Stream Factor		-	100%	100%	100%	100%	100%	100%
Operations Partial Year Factor	-	-	1.000	1.000	1.000	100%	100%	100%
Wet Gas Processed (MCM)	-	-	2.14	2.14	4.28	4.28	4.28	4.28
Dry Gas Production (BCM)	-	-	1.80	1.91	3.76	3.76	3.76	3.76
NGL Production (MMTons)	-	-	0.36	0.49	1.07	1.07	1.07	1.07

REVENUE DATA (1996 $'s)

NGL Domestic Price ($/Ton)	84.82	Domestic Gas Price ($/MCM)	17.09
NGL Export Price ($/Ton)	180.00	Export Gas Price ($/MCM)	90.00
% NGL for Export	100%	% Dry Gas for Export	100%

OPERATING COST DATA (1993 $000's)

Wet Gas Feedstock Cost ($/MCM)	-	
Chemicals Cost	382	
Utility Cost	19,432	
Maintenance Cost	985	
Labor Cost, Benefits	1,364	518
Other Expenses	10,134	

TRANSPORT COSTS (1996 $'s)

	DOM	EXP
Dry Gas In-Russia Costs ($/MCM)	-	40.00
Dry Gas Export Costs		32.00
NGL In-Russia Costs ($/Ton)	1.94	36.55
NGL Pipeline Costs	43.52	43.52
NGL Port Loading Charge		1.62
NGL Shipping Cost		15.10

CAPITAL COST DATA (1993 $000's)

	1995	1996	1997	Total
Gubkinsky GPP Expansion	43,700	157,500	90,300	291,500
Tarasovsky Gas Processing Plant	-	-	-	-
Gas Gathering Systems Cost	17,900	53,700	40,200	111,800
Metering Facilities Cost	440	1,290	970	2,700
Contributed Assets	9,839	19,072	6,431	35,343
Other Owners Costs	8,000	-	-	8,000
Infrastructure Costs	9,306	31,874	19,721	60,900
Initial Working Capital	2,839	-	-	2,839
Capital Costs	92,024	263,436	157,622	513,082

WORKING CAPITAL DATA

Days Receivables	45
Days Payables	45

FINANCING DATA

	WB/Other	Loan
% of Permanent Financing	70%	
Loan Amount, Commitment	414,701	414,701
Loan Interest Rate	8.15%	
Start of Repayment, Repayment Period	Jan 98	9.0
Commitment Fees %	0.25%	
Upfront Fee %	-	
Other Fin Fees & Close Costs (%, Amt)	-	

KEY RESULTS SUMMARY

Real Return on Investment (no taxes)	22.6%
Unleveraged Payback (Yrs)	3.2
Nominal NPV (Oct '93) @ 15.0%	255,804
Real Return on Equity	24.0%
Leveraged Payback (Yrs)	3.2
Nominal NPV (Oct '93) @ 15.0%	151,415
Min Debt Service Coverage	164%
Average Debt Service Coverage	206%

FINANCING DATA (cont'd)

	Actual
Required Reserves (1st Operating Yr)	38,761
Cash Flow Dedicated to Reserves	100%
Reinvestment Rate	3.0%

TAX DATA

Tax & Book In Service Month	Jan 96
Profits Tax	32.00%
15% Yr SL Property %	100.0%
Carryforward Years	5
VAT Tax (% of CapEx)	20.0%
Property Tax (% of Fixed Assets)	-
Road Tax (% of Revenues)	0.4%
Dry Gas Export Tariff ('93 $/MCM)	-
NGL Export Tariff ('93 $/Ton)	-

ECONOMIC DATA

Global Inflation Rate	2.8% **
Capital Cost Esc Rate	2.8%
O&M Esc Rate	2.8%
Export Gas Price Esc Rate	2.8%
Domestic Gas Price Esc Rate	2.8%
Export NGL Price Esc Rate	2.8%
Domestic NGL Price Esc Rate	2.8%

** Until 2000, 4% thereafter
(all escalation equivalent to inflation)

SENSITIVITY ANALYSIS FACTORS

O&M Cost	1.00
Gas Price	1.00
NGL Price	1.25
Capital Cost	1.00
Transport Cost	1.00
Wet Gas Price	1.00

039

137

SIBERIAN GAS PROCESSING PLANT
Annual Sources and Uses of Funds During Construction

($US Thousands)

	1995	1996	1997	Total	%
SOURCES OF FUNDS					
World Bank/Other Loan	68,875	205,486	140,340	414,701	70%
SIBNG Cash Equity	-	-	-	-	-
PNG Cash Equity	-	-	-	-	-
Gasprom Cash Equity	4,920	9,536	3,216	17,672	3%
SIBNG Equity	4,920	9,536	3,216	17,672	3%
PNG Equity	4,920	9,536	3,216	17,672	3%
Foreign Equity	14,759	28,609	9,647	53,015	9%
JV Operating Cash Flow	-	30,848	40,852	71,700	12%
Total Sources of Funds	98,393	293,552	200,485	592,430	100%
USES OF FUNDS					
Gubkinsky GPP Expansion	45,950	169,606	99,266	314,821	
Tarasovsky Gas Processing Plant	-	-	-	-	
Gas Gathering Systems Cost	18,820	57,765	44,281	120,866	
Metering Facilities Costs	463	1,388	1,068	2,919	
Infrastructure Costs	9,785	34,314	21,692	65,791	
Contributed Assets	9,839	19,072	6,431	35,343	
Other Owners Costs	8,281	-	-	8,281	
Initial Working Capital	3,000	-	-	3,000	
Capital Costs	96,137	282,144	172,739	551,020	93%
Other Loan Interest	1,260	10,710	27,581	39,551	
Other Loan Commitment Fees	996	698	165	1,859	
Upfront Fees	-	-	-	-	
Financing Costs	2,256	11,408	27,746	41,410	7%
Total Uses of Funds	98,393	293,552	200,485	592,430	100%

	$	%
Total Debt	414,701	70%
Operating Cash	71,700	12%
Equity Requirement	106,029	18%
	592,430	100%

MEMORANDA	WB/Other Loan	
Loan Draws, Amount	414,701	
Standby Facility	-	
Constr Loan Draws + Standby, Commitment	414,701	414,701
Constr Loan Int Rate	8.15%	
Commitment Fee Rate	0.25%	
Upfront Fee Rate	-	
Other Financing Fees (%, Amt)	-	
Repayment Period	9.0	

** NOTE: ANNUAL SANDU STATEMENT IS FOR PRESENTATION ONLY. VALUES ARE FROM QUARTERLY CALCULATIONS.

VAT TAX FUNDING				
VAT Tax	15,003	52,614	33,262	100,879
VAT Recovery Expressed in $'s	435	8,945	30,692	40,072
Net VAT Payment	14,569	43,669	2,570	60,807
PNG Cash Equity for VAT	2,428	7,278	428	10,135
SNGP Cash Equity for VAT	2,428	7,278	428	10,135
Gasprom Cash Equity for VAT	2,428	7,278	428	10,135
Foreign Equity for VAT	7,284	21,834	1,285	30,404
Cash Equity for VAT	14,569	43,669	2,570	60,807

Equity Requirement	106,029
Equity for VAT	60,807
Total Equity	166,837

040

SIBERIAN GASS PROCESSING PLANT
Equity Returns

(Thousands)

	1994	1995	1996	1997	1998	1999	2000	2001	2002	2003	2004	2005	2006
EQUITY INVESTMENT													
SNGP Equity	-	7,348	16,814	3,644	-	-	-	-	-	-	-	-	-
PNG Equity	-	7,348	16,814	3,644	-	-	-	-	-	-	-	-	-
Gasprom Equity	-	7,348	16,814	3,644	-	-	-	-	-	-	-	-	-
Foreign Equity	-	22,043	50,443	10,932	-	-	-	-	-	-	-	-	-
Additional Equity	-	-	-	-	-	-	-	-	-	-	-	-	-
Total Equity	-	44,087	100,886	21,864	-	-	-	-	-	-	-	-	-
CUMULATIVE EQUITY INVESTMENT													
SNGP Equity Holdings	-	7,348	24,162	27,806	27,806	27,806	27,806	27,806	27,806	27,806	27,806	27,806	27,806
PNG Equity Holdings	-	7,348	24,162	27,806	27,806	27,806	27,806	27,806	27,806	27,806	27,806	27,806	27,806
Gasprom Equity Holdings	-	7,348	24,162	27,806	27,806	27,806	27,806	27,806	27,806	27,806	27,806	27,806	27,806
Foreign Equity Holdings	-	22,043	72,486	83,418	83,418	83,418	83,418	83,418	83,418	83,418	83,418	83,418	83,418
CS Equity Position	-	44,087	144,973	166,837	166,837	166,837	166,837	166,837	166,837	166,837	166,837	166,837	166,837
PROJECT RETURN ON EQUITY													
CS Dividends	-	-	-	-	10,582	77,111	68,732	63,932	68,610	71,947	70,479	61,231	90,388
Less: Equity Investment	-	44,087	100,886	21,864	-	-	-	-	-	-	-	-	-
Net Cash Flow	-	(44,087)	(100,886)	(21,864)	10,582	77,111	68,732	63,932	68,610	71,947	70,479	61,231	90,388
Cumulative	-	(44,087)	(144,973)	(166,837)	(156,255)	(79,144)	(10,412)	53,520	122,131	194,078	264,557	325,788	416,176
Real Net Cash Flow	-	(42,007)	(93,508)	(19,713)	9,281	65,789	57,044	51,019	52,646	53,084	50,000	41,769	59,287
Real Return on Equity	24.0%												

SIBERIAN GASS PROCESSING PLANT
Equity Returns

(Thousands)

	1994	1995	1996	1997	1998	1999	2000	2001	2002	2003	2004	2005	2006
SNGP RETURNS													
SNGP Share of Common Stock		17%	17%	17%	17%	17%	17%	17%	17%	17%	17%	17%	17%
CS Dividends	-	-	-	-	10,582	77,111	68,732	63,932	68,610	71,947	70,479	61,231	90,388
SNGP CS Dividends		-	-	-	1,764	12,852	11,455	10,655	11,435	11,991	11,746	10,205	15,065
SNGP CS Dividends		-	-	-	1,764	12,852	11,455	10,655	11,435	11,991	11,746	10,205	15,065
Plus: SNGP NGL Pipeline Marginal Profit	-	-	-	-	-	-	-	-	-	-	-	-	-
Less: SNGP Equity	-	7,348	16,814	3,644	-	-	-	-	-	-	-	-	-
SNGP Net Cash Flow	-	(7,348)	(16,814)	(3,644)	1,764	12,852	11,455	10,655	11,435	11,991	11,746	10,205	15,065
Real SNGP Net Cash Flow	-	(7,001)	(15,585)	(3,285)	1,547	10,965	9,507	8,503	8,774	8,847	8,333	6,961	9,881
SNGP Real Return on Equity	24.0%												
PNG RETURNS													
PNG Share of Common Stock		17%	17%	17%	17%	17%	17%	17%	17%	17%	17%	17%	17%
CS Dividends	-	-	-	-	10,582	77,111	68,732	63,932	68,610	71,947	70,479	61,231	90,388
PNG CS Dividends		-	-	-	1,764	12,852	11,455	10,655	11,435	11,991	11,746	10,205	15,065
PNG CS Dividends		-	-	-	1,764	12,852	11,455	10,655	11,435	11,991	11,746	10,205	15,065
Plus: PNG Wet Gas Marginal Profit	-	-	-	-	-	-	-	-	-	-	-	-	-
Less: PNG Equity	-	7,348	16,814	3,644	-	-	-	-	-	-	-	-	-
PNG Net Cash Flow	-	(7,348)	(16,814)	(3,644)	1,764	12,852	11,455	10,655	11,435	11,991	11,746	10,205	15,065
Real PNG Net Cash Flow	-	(7,001)	(15,585)	(3,285)	1,547	10,965	9,507	8,503	8,774	8,847	8,333	6,961	9,881
PNG Real Return on Equity	24.0%												
GASPROM RETURNS													
Gasprom Share of Common Stock		17%	17%	17%	17%	17%	17%	17%	17%	17%	17%	17%	17%
CS Dividends	-	-	-	-	10,582	77,111	68,732	63,932	68,610	71,947	70,479	61,231	90,388
Gasprom CS Dividends		-	-	-	1,764	12,852	11,455	10,655	11,435	11,991	11,746	10,205	15,065
Gasprom CS Dividends		-	-	-	1,764	12,852	11,455	10,655	11,435	11,991	11,746	10,205	15,065
Plus: Gasprom Transport Marginal Profit	-	-	-	-	-	-	-	-	-	-	-	-	-
Less: Gasprom Equity	-	7,348	16,814	3,644	-	-	-	-	-	-	-	-	-
Gasprom Net Cash Flow	-	(7,348)	(16,814)	(3,644)	1,764	12,852	11,455	10,655	11,435	11,991	11,746	10,205	15,065
Real Gasprom Net Cash Flow	-	(7,001)	(15,585)	(3,285)	1,547	10,965	9,507	8,503	8,774	8,847	8,333	6,961	9,881
Gasprom Real Return on Equity	24.0%												
FOREIGN INVESTOR RETURNS													
Foreign Share of Common Stock		50%	50%	50%	50%	50%	50%	50%	50%	50%	50%	50%	50%
CS Dividends	-	-	-	-	10,582	77,111	68,732	63,932	68,610	71,947	70,479	61,231	90,388
Foreign CS Dividends		-	-	-	5,291	38,555	34,366	31,966	34,305	35,974	35,239	30,616	45,194
Foreign CS Dividends		-	-	-	5,291	38,555	34,366	31,966	34,305	35,974	35,239	30,616	45,194
Less: Foreign Equity	-	22,043	50,443	10,932	-	-	-	-	-	-	-	-	-
Less: Additional Equity Investment	-	-	-	-	-	-	-	-	-	-	-	-	-
Foreign Net Cash Flow	-	(22,043)	(50,443)	(10,932)	5,291	38,555	34,366	31,966	34,305	35,974	35,239	30,616	45,194
Real Foreign Cash Flow	-	(21,003)	(46,754)	(9,856)	4,641	32,895	28,522	25,510	26,323	26,542	25,000	20,884	29,643
Foreign Real Return on Equity	24.0%												

042

SIBERIAN GASS PROCESSING PLANT
Equity Returns

(Thousands)

	2007	2008	2009	2010	2011	2012	2013	2014	2015	Total
EQUITY INVESTMENT										
SNGP Equity	-	-	-	-	-	-	-	-	-	27,806
PNG Equity	-	-	-	-	-	-	-	-	-	27,806
Gasprom Equity	-	-	-	-	-	-	-	-	-	27,806
Foreign Equity	-	-	-	-	-	-	-	-	-	83,418
Additional Equity	-	-	-	-	-	-	-	-	-	-
Total Equity	-	-	-	-	-	-	-	-	-	166,837
CUMULATIVE EQUITY INVESTMENT										
SNGP Equity Holdings	27,806	27,806	27,806	27,806	27,806	27,806	27,806	27,806	27,806	
PNG Equity Holdings	27,806	27,806	27,806	27,806	27,806	27,806	27,806	27,806	27,806	
Gasprom Equity Holdings	27,806	27,806	27,806	27,806	27,806	27,806	27,806	27,806	27,806	
Foreign Equity Holdings	83,418	83,418	83,418	83,418	83,418	83,418	83,418	83,418	83,418	
CS Equity Position	166,837	166,837	166,837	166,837	166,837	166,837	166,837	166,837	166,837	
PROJECT RETURN ON EQUITY										
CS Dividends	117,877	122,593	127,496	132,596	137,900	143,416	149,153	155,119	190,778	1,859,940
Less: Equity Investment	-	-	-	-	-	-	-	-	-	166,837
Net Cash Flow	117,877	122,593	127,496	132,596	137,900	143,416	149,153	155,119	190,778	1,693,103
Cumulative	534,053	656,646	784,142	916,738	1,054,638	1,198,054	1,347,207	1,502,326	1,693,103	
Real Net Cash Flow	74,344	74,344	74,344	74,344	74,344	74,344	74,344	74,344	87,917	967,357
Real Return on Equity										

1632

153

SIBERIAN GASS PROCESSING PLANT
Equity Returns

(Thousands)

	2007	2008	2009	2010	2011	2012	2013	2014	2015	Total
SNGP RETURNS										
SNGP Share of Common Stock	17%	17%	17%	17%	17%	17%	17%	17%	17%	
CS Dividends	117,877	122,593	127,496	132,596	137,900	143,416	149,153	155,119	190,778	1,859,940
SNGP CS Dividends	19,646	20,432	21,249	22,099	22,983	23,903	24,859	25,853	31,796	309,990
SNGP CS Dividends	19,646	20,432	21,249	22,099	22,983	23,903	24,859	25,853	31,796	309,990
Plus: SNGP NGL Pipeline Marginal Profit	-	-	-	-	-	-	-	-	-	-
Less: SNGP Equity	-	-	-	-	-	-	-	-	-	27,806
SNGP Net Cash Flow	19,646	20,432	21,249	22,099	22,983	23,903	24,859	25,853	31,796	282,184
Real SNGP Net Cash Flow	12,391	12,391	12,391	12,391	12,391	12,391	12,391	12,391	14,653	161,226
SNGP Real Return on Equity										
PNG RETURNS										
PNG Share of Common Stock	17%	17%	17%	17%	17%	17%	17%	17%	17%	
CS Dividends	117,877	122,593	127,496	132,596	137,900	143,416	149,153	155,119	190,778	1,859,940
PNG CS Dividends	19,646	20,432	21,249	22,099	22,983	23,903	24,859	25,853	31,796	309,990
PNG CS Dividends	19,646	20,432	21,249	22,099	22,983	23,903	24,859	25,853	31,796	309,990
Plus: PNG Wet Gas Marginal Profit	-	-	-	-	-	-	-	-	-	-
Less: PNG Equity	-	-	-	-	-	-	-	-	-	27,806
PNG Net Cash Flow	19,646	20,432	21,249	22,099	22,983	23,903	24,859	25,853	31,796	282,184
Real PNG Net Cash Flow	12,391	12,391	12,391	12,391	12,391	12,391	12,391	12,391	14,653	161,226
PNG Real Return on Equity										
GASPROM RETURNS										
Gasprom Share of Common Stock	17%	17%	17%	17%	17%	17%	17%	17%	17%	
CS Dividends	117,877	122,593	127,496	132,596	137,900	143,416	149,153	155,119	190,778	1,859,940
Gasprom CS Dividends	19,646	20,432	21,249	22,099	22,983	23,903	24,859	25,853	31,796	309,990
Gasprom CS Dividends	19,646	20,432	21,249	22,099	22,983	23,903	24,859	25,853	31,796	309,990
Plus: Gasprom Transport Marginal Profit	-	-	-	-	-	-	-	-	-	-
Less: Gasprom Equity	-	-	-	-	-	-	-	-	-	27,806
Gasprom Net Cash Flow	19,646	20,432	21,249	22,099	22,983	23,903	24,859	25,853	31,796	282,184
Real Gasprom Net Cash Flow	12,391	12,391	12,391	12,391	12,391	12,391	12,391	12,391	14,653	161,226
Gasprom Real Return on Equity										
FOREIGN INVESTOR RETURNS										
Foreign Share of Common Stock	50%	50%	50%	50%	50%	50%	50%	50%	50%	
CS Dividends	117,877	122,593	127,496	132,596	137,900	143,416	149,153	155,119	190,778	1,859,940
Foreign CS Dividends	58,939	61,296	63,748	66,298	68,950	71,708	74,576	77,559	95,389	929,970
Foreign CS Dividends	58,939	61,296	63,748	66,298	68,950	71,708	74,576	77,559	95,389	929,970
Less: Foreign Equity	-	-	-	-	-	-	-	-	-	83,418
Less: Additional Equity Investment	-	-	-	-	-	-	-	-	-	-
Foreign Net Cash Flow	58,939	61,296	63,748	66,298	68,950	71,708	74,576	77,559	95,389	846,552
Real Foreign Cash Flow	37,172	37,172	37,172	37,172	37,172	37,172	37,172	37,172	43,959	483,679
Foreign Real Return on Equity										

044

SIBERIAN GAS PROCESSING PLANT
Data and Key Results

TIMING DATA

Cost Estimate Month	Oct 93	First, Last Operation Month	Jan 96 Dec 15
Financial Closing Month	Jan 95	Economic Life	20.00

ENGINEERING DATA

	1994	1995	1996	1997	1998	1999	2000	2001
Rated Capacity (BCM/yr)in 1996, 1998	2.14	4.28						
Stream Factor		-	100%	100%	100%	100%	100%	100%
Operations Partial Year Factor	-	-	1.000	1.000	1.000	100%	100%	100%
Wet Gas Processed (MCM)	-	-	2.14	2.14	4.28	4.28	4.28	4.28
Dry Gas Production (BCM)	-	-	1.80	1.91	3.76	3.76	3.76	3.76
NGL Production (MMTons)	-	-	0.36	0.49	1.07	1.07	1.07	1.07

REVENUE DATA (1996 $'s)

NGL Domestic Price ($/Ton)	50.89	Domestic Gas Price ($/MCM)	17.09
NGL Export Price ($/Ton)	108.00	Export Gas Price ($/MCM)	90.00
% NGL for Export	100%	% Dry Gas for Export	100%

OPERATING COST DATA (1993 $000's)

Wet Gas Feedstock Cost ($/MCM)	-	
Chemicals Cost	382	
Utility Cost	19,432	
Maintenance Cost	985	
Labor Cost, Benefits	1,364	518
Other Expenses	10,134	

TRANSPORT COSTS (1996 $'s)

	DOM	EXP
Dry Gas In-Russia Costs ($/MCM)	-	40.00
Dry Gas Export Costs		32.00
NGL In-Russia Costs ($/Ton)	1.94	36.55
NGL Pipeline Costs	43.52	43.52
NGL Port Loading Charge		1.62
NGL Shipping Cost		15.10

CAPITAL COST DATA (1993 $000's)

	1995	1996	1997	Total
Gubkinsky GPP Expansion	43,700	157,500	90,300	291,500
Tarasovsky Gas Processing Plant	-	-	-	-
Gas Gathering Systems Cost	17,900	53,700	40,200	111,800
Metering Facilities Cost	440	1,290	970	2,700
Contributed Assets	9,842	24,336	15,021	49,200
Other Owners Costs	8,000	-	-	8,000
Infrastructure Costs	9,306	31,874	19,721	60,900
Initial Working Capital	2,839	-	-	2,839
Capital Costs	92,027	268,700	166,212	526,938

WORKING CAPITAL DATA

Days Receivables	45
Days Payables	45

FINANCING DATA

	WB/Other	Loan
% of Permanent Financing	70%	
Loan Amount, Commitment	424,861	424,861
Loan Interest Rate	8.15%	
Start of Repayment, Repayment Period	Jan 98	9.0
Commitment Fees %	0.25%	
Upfront Fee %	-	
Other Fin Fees & Close Costs (%, Amt)	-	

KEY RESULTS SUMMARY

Real Return on Investment (no taxes)	5.4%
Unleveraged Payback (Yrs)	8.9
Nominal NPV (Oct '93) @ 15.0%	(108078)
Real Return on Equity	(0.5%)
Leveraged Payback (Yrs)	15.2
Nominal NPV (Oct '93) @ 15.0%	(128063)
Min Debt Service Coverage	67%
Average Debt Service Coverage	85%

FINANCING DATA (cont'd)

	Actual
Required Reserves (1st Operating Yr)	39,711
Cash Flow Dedicated to Reserves	100%
Reinvestment Rate	3.0%

TAX DATA

Tax & Book In Service Month	Jan 96
Profits Tax	32.00%
15% Yr SL Property %	100.0%
Carryforward Years	5
VAT Tax (% of CapEx)	20.0%
Property Tax (% of Fixed Assets)	-
Road Tax (% of Revenues)	0.4%
Dry Gas Export Tariff ('93 $/MCM)	-
NGL Export Tariff ('93 $/Ton)	-

ECONOMIC DATA

Global Inflation Rate	2.8% **
Capital Cost Esc Rate	2.8%
O&M Esc Rate	2.8%
Export Gas Price Esc Rate	2.8%
Domestic Gas Price Esc Rate	2.8%
Export NGL Price Esc Rate	2.8%
Domestic NGL Price Esc Rate	2.8%

** Until 2000, 4% thereafter
(all escalation equivalent to inflation)

SENSITIVITY ANALYSIS FACTORS

O&M Cost	1.00
Gas Price	1.00
NGL Price	0.75
Capital Cost	1.00
Transport Cost	1.00
Wet Gas Price	1.00

045

SIBERIAN GAS PROCESSING PLANT
Annual Sources and Uses of Funds During Construction

($US Thousands)

	1995	1996	1997	Total	%
SOURCES OF FUNDS					
World Bank/Other Loan	68,895	209,265	146,700	424,861	70%
SIBNG Cash Equity	-	-	-	-	-
PNG Cash Equity	-	-	-	-	-
Gasprom Cash Equity	4,921	12,168	7,511	24,600	4%
SIBNG Equity	4,921	12,168	7,511	24,600	4%
PNG Equity	4,921	12,168	7,511	24,600	4%
Foreign Equity	14,763	36,505	22,532	73,800	12%
JV Operating Cash Flow	-	16,676	17,808	34,484	6%
Total Sources of Funds	98,422	298,950	209,572	606,944	100%
USES OF FUNDS					
Gubkinsky GPP Expansion	45,950	169,606	99,266	314,821	
Tarasovsky Gas Processing Plant	-	-	-	-	
Gas Gathering Systems Cost	18,820	57,765	44,281	120,866	
Metering Facilities Costs	463	1,388	1,068	2,919	
Infrastructure Costs	9,785	34,314	21,692	65,791	
Contributed Assets	9,842	24,336	15,021	49,200	
Other Owners Costs	8,281	-	-	8,281	
Initial Working Capital	3,000	-	-	3,000	
Capital Costs	96,140	287,408	181,329	564,877	93%
Other Loan Interest	1,260	10,822	28,068	40,151	
Other Loan Commitment Fees	1,021	720	175	1,916	
Upfront Fees	-	-	-	-	
Financing Costs	2,282	11,542	28,243	42,067	7%
Total Uses of Funds	98,422	298,950	209,572	606,944	100%

	$	%
Total Debt	424,861	70%
Operating Cash	34,484	6%
Equity Requirement	147,599	24%
	606,944	100%

MEMORANDA	WB/Other Loan	
Loan Draws, Amount	424,861	
Standby Facility	-	
Constr Loan Draws + Standby, Commitment	424,861	424,861
Constr Loan Int Rate	8.15%	
Commitment Fee Rate	0.25%	
Upfront Fee Rate	-	
Other Financing Fees (%, Amt)	-	
Repayment Period	9.0	

** NOTE: ANNUAL SANDU STATEMENT IS FOR PRESENTATION ONLY. VALUES ARE FROM QUARTERLY CALCULATIONS.

VAT TAX FUNDING				
VAT Tax	15,003	52,614	33,262	100,879
VAT Recovery Expressed in $'s	435	8,945	30,692	40,072
Net VAT Payment	14,569	43,669	2,570	60,807
PNG Cash Equity for VAT	2,428	7,278	428	10,135
SNGP Cash Equity for VAT	2,428	7,278	428	10,135
Gasprom Cash Equity for VAT	2,428	7,278	428	10,135
Foreign Equity for VAT	7,284	21,834	1,285	30,404
Cash Equity for VAT	14,569	43,669	2,570	60,807

Equity Requirement	147,599
Equity for VAT	60,807
Total Equity	208,407

SIBERIAN GASS PROCESSING PLANT
Equity Returns

(Thousands)

	1994	1995	1996	1997	1998	1999	2000	2001	2002	2003	2004	2005	2006
EQUITY INVESTMENT													
SNGP Equity	-	7,349	19,446	7,939	-	-	-	-	-	-	-	-	-
PNG Equity	-	7,349	19,446	7,939	-	-	-	-	-	-	-	-	-
Gasprom Equity	-	7,349	19,446	7,939	-	-	-	-	-	-	-	-	-
Foreign Equity	-	22,048	58,339	23,817	-	-	-	-	-	-	-	-	-
Additional Equity	-	-	-	-	25,910	7,722	14,106	19,193	13,497	7,722	1,866	4,174	-
Total Equity	-	44,095	116,678	47,633	25,910	7,722	14,106	19,193	13,497	7,722	1,866	4,174	-
CUMULATIVE EQUITY INVESTMENT													
SNGP Equity Holdings	-	7,349	26,796	34,734	34,734	34,734	34,734	34,734	34,734	34,734	34,734	34,734	34,734
PNG Equity Holdings	-	7,349	26,796	34,734	34,734	34,734	34,734	34,734	34,734	34,734	34,734	34,734	34,734
Gasprom Equity Holdings	-	7,349	26,796	34,734	34,734	34,734	34,734	34,734	34,734	34,734	34,734	34,734	34,734
Foreign Equity Holdings	-	22,048	80,387	104,203	130,113	137,835	151,941	171,134	184,631	192,353	194,220	198,394	198,394
CS Equity Position	-	44,095	160,774	208,407	234,317	242,038	256,145	275,337	288,834	296,557	298,423	302,597	302,597
PROJECT RETURN ON EQUITY													
CS Dividends	-	-	-	-	-	-	-	-	-	-	-	-	888
Less: Equity Investment	-	44,095	116,678	47,633	25,910	7,722	14,106	19,193	13,497	7,722	1,866	4,174	-
Net Cash Flow	-	(44,095)	(116,678)	(47,633)	(25,910)	(7,722)	(14,106)	(19,193)	(13,497)	(7,722)	(1,866)	(4,174)	888
Cumulative	-	(44,095)	(160,774)	(208,407)	(234,317)	(242,038)	(256,145)	(275,337)	(288,834)	(296,557)	(298,423)	(302,597)	(301,709)
Real Net Cash Flow	-	(42,015)	(108,146)	(42,947)	(22,725)	(6,588)	(11,707)	(15,316)	(10,356)	(5,698)	(1,324)	(2,847)	583
Real Return on Equity	(0.5%)												

1651

SIBERIAN GASS PROCESSING PLANT
Equity Returns

(Thousands)

	1994	1995	1996	1997	1998	1999	2000	2001	2002	2003	2004	2005	2006
SNGP RETURNS													
SNGP Share of Common Stock		17%	17%	17%	15%	14%	14%	13%	12%	12%	12%	11%	11%
CS Dividends	-	-	-	-	-	-	-	-	-	-	-	-	888
SNGP CS Dividends		-	-	-	-	-	-	-	-	-	-	-	102
SNGP CS Dividends		-	-	-	-	-	-	-	-	-	-	-	102
Plus: SNGP NGL Pipeline Marginal Profit	-	-	-	-	-	-	-	-	-	-	-	-	-
Less: SNGP Equity	-	7,349	19,446	7,939	-	-	-	-	-	-	-	-	-
SNGP Net Cash Flow	-	(7,349)	(19,446)	(7,939)	-	-	-	-	-	-	-	-	102
Real SNGP Net Cash Flow	-	(7,003)	(18,024)	(7,158)	-	-	-	-	-	-	-	-	67
SNGP Real Return on Equity	#ARITH												
PNG RETURNS													
PNG Share of Common Stock		17%	17%	17%	15%	14%	14%	13%	12%	12%	12%	11%	11%
CS Dividends	-	-	-	-	-	-	-	-	-	-	-	-	888
PNG CS Dividends		-	-	-	-	-	-	-	-	-	-	-	102
PNG CS Dividends		-	-	-	-	-	-	-	-	-	-	-	102
Plus: PNG Wet Gas Marginal Profit	-	-	-	-	-	-	-	-	-	-	-	-	-
Less: PNG Equity	-	7,349	19,446	7,939	-	-	-	-	-	-	-	-	-
PNG Net Cash Flow	-	(7,349)	(19,446)	(7,939)	-	-	-	-	-	-	-	-	102
Real PNG Net Cash Flow	-	(7,003)	(18,024)	(7,158)	-	-	-	-	-	-	-	-	67
PNG Real Return on Equity	(0.7%)												
GASPROM RETURNS													
Gasprom Share of Common Stock		17%	17%	17%	15%	14%	14%	13%	12%	12%	12%	11%	11%
CS Dividends	-	-	-	-	-	-	-	-	-	-	-	-	888
Gasprom CS Dividends		-	-	-	-	-	-	-	-	-	-	-	102
Gasprom CS Dividends		-	-	-	-	-	-	-	-	-	-	-	102
Plus: Gasprom Transport Marginal Profit	-	-	-	-	-	-	-	-	-	-	-	-	-
Less: Gasprom Equity	-	7,349	19,446	7,939	-	-	-	-	-	-	-	-	-
Gasprom Net Cash Flow	-	(7,349)	(19,446)	(7,939)	-	-	-	-	-	-	-	-	102
Real Gasprom Net Cash Flow	-	(7,003)	(18,024)	(7,158)	-	-	-	-	-	-	-	-	67
Gasprom Real Return on Equity	#ARITH												
FOREIGN INVESTOR RETURNS													
Foreign Share of Common Stock		50%	50%	50%	56%	57%	59%	62%	64%	65%	65%	66%	66%
CS Dividends	-	-	-	-	-	-	-	-	-	-	-	-	888
Foreign CS Dividends		-	-	-	-	-	-	-	-	-	-	-	583
Foreign CS Dividends		-	-	-	-	-	-	-	-	-	-	-	583
Less: Foreign Equity	-	22,048	58,339	23,817	-	-	-	-	-	-	-	-	-
Less: Additional Equity Investment	-	-	-	-	25,910	7,722	14,106	19,193	13,497	7,722	1,866	4,174	-
Foreign Net Cash Flow	-	(22,048)	(58,339)	(23,817)	(25,910)	(7,722)	(14,106)	(19,193)	(13,497)	(7,722)	(1,866)	(4,174)	583
Real Foreign Cash Flow	-	(21,008)	(54,073)	(21,474)	(22,725)	(6,588)	(11,707)	(15,316)	(10,356)	(5,698)	(1,324)	(2,847)	382
Foreign Real Return on Equity	(0.3%)												

048

SIBERIAN GASS PROCESSING PLANT
Equity Returns

(Thousands)

	2007	2008	2009	2010	2011	2012	2013	2014	2015	Total
EQUITY INVESTMENT										
SNGP Equity	-	-	-	-	-	-	-	-	-	34,734
NG Equity	-	-	-	-	-	-	-	-	-	34,734
Gasprom Equity	-	-	-	-	-	-	-	-	-	34,734
Foreign Equity	-	-	-	-	-	-	-	-	-	104,203
Additional Equity	-	-	-	-	-	-	-	-	-	94,191
Total Equity	-	-	-	-	-	-	-	-	-	302,597
CUMULATIVE EQUITY INVESTMENT										
SNGP Equity Holdings	34,734	34,734	34,734	34,734	34,734	34,734	34,734	34,734	34,734	
NG Equity Holdings	34,734	34,734	34,734	34,734	34,734	34,734	34,734	34,734	34,734	
Gasprom Equity Holdings	34,734	34,734	34,734	34,734	34,734	34,734	34,734	34,734	34,734	
Foreign Equity Holdings	198,394	198,394	198,394	198,394	198,394	198,394	198,394	198,394	198,394	
CS Equity Position	302,597	302,597	302,597	302,597	302,597	302,597	302,597	302,597	302,597	
PROJECT RETURN ON EQUITY										
CS Dividends	52,058	46,523	45,520	47,341	49,235	51,204	53,252	55,383	68,114	469,520
Less: Equity Investment	-	-	-	-	-	-	-	-	-	302,597
Net Cash Flow	52,058	46,523	45,520	47,341	49,235	51,204	53,252	55,383	68,114	166,923
Cumulative	(249,650)	(203,127)	(157,607)	(110,266)	(61,031)	(9,826)	43,426	98,809	166,923	
Real Net Cash Flow	32,832	28,213	26,543	26,543	26,543	26,543	26,543	26,543	31,389	(17,393)
Real Return on Equity										

049

158

SIBERIAN GASS PROCESSING PLANT
Equity Returns

(Thousands)

	2007	2008	2009	2010	2011	2012	2013	2014	2015	Total
SNGP RETURNS										
SNGP Share of Common Stock	11%	11%	11%	11%	11%	11%	11%	11%	11%	
CS Dividends	52,058	46,523	45,520	47,341	49,235	51,204	53,252	55,383	68,114	469,520
SNGP CS Dividends	5,976	5,340	5,225	5,434	5,652	5,878	6,113	6,357	7,819	53,895
SNGP CS Dividends	5,976	5,340	5,225	5,434	5,652	5,878	6,113	6,357	7,819	53,895
Plus: SNGP NGL Pipeline Marginal Profit	-	-	-	-	-	-	-	-	-	-
Less: SNGP Equity	-	-	-	-	-	-	-	-	-	34,734
SNGP Net Cash Flow	5,976	5,340	5,225	5,434	5,652	5,878	6,113	6,357	7,819	19,161
Real SNGP Net Cash Flow	3,769	3,239	3,047	3,047	3,047	3,047	3,047	3,047	3,603	(3,226)
SNGP Real Return on Equity										
PNG RETURNS										
PNG Share of Common Stock	11%	11%	11%	11%	11%	11%	11%	11%	11%	
CS Dividends	52,058	46,523	45,520	47,341	49,235	51,204	53,252	55,383	68,114	469,520
PNG CS Dividends	5,976	5,340	5,225	5,434	5,652	5,878	6,113	6,357	7,819	53,895
PNG CS Dividends	5,976	5,340	5,225	5,434	5,652	5,878	6,113	6,357	7,819	53,895
Plus: PNG Wet Gas Marginal Profit	-	-	-	-	-	-	-	-	-	-
Less: PNG Equity	-	-	-	-	-	-	-	-	-	34,734
PNG Net Cash Flow	5,976	5,340	5,225	5,434	5,652	5,878	6,113	6,357	7,819	19,161
Real PNG Net Cash Flow	3,769	3,239	3,047	3,047	3,047	3,047	3,047	3,047	3,603	(3,226)
PNG Real Return on Equity										
GASPROM RETURNS										
Gasprom Share of Common Stock	11%	11%	11%	11%	11%	11%	11%	11%	11%	
CS Dividends	52,058	46,523	45,520	47,341	49,235	51,204	53,252	55,383	68,114	469,520
Gasprom CS Dividends	5,976	5,340	5,225	5,434	5,652	5,878	6,113	6,357	7,819	53,895
Gasprom CS Dividends	5,976	5,340	5,225	5,434	5,652	5,878	6,113	6,357	7,819	53,895
Plus: Gasprom Transport Marginal Profit	-	-	-	-	-	-	-	-	-	-
Less: Gasprom Equity	-	-	-	-	-	-	-	-	-	34,734
Gasprom Net Cash Flow	5,976	5,340	5,225	5,434	5,652	5,878	6,113	6,357	7,819	19,161
Real Gasprom Net Cash Flow	3,769	3,239	3,047	3,047	3,047	3,047	3,047	3,047	3,603	(3,226)
Gasprom Real Return on Equity										
FOREIGN INVESTOR RETURNS										
Foreign Share of Common Stock	66%	66%	66%	66%	66%	66%	66%	66%	66%	
CS Dividends	52,058	46,523	45,520	47,341	49,235	51,204	53,252	55,383	68,114	469,520
Foreign CS Dividends	34,131	30,502	29,845	31,039	32,280	33,571	34,914	36,311	44,658	307,835
Foreign CS Dividends	34,131	30,502	29,845	31,039	32,280	33,571	34,914	36,311	44,658	307,835
Less: Foreign Equity	-	-	-	-	-	-	-	-	-	104,203
Less: Additional Equity Investment	-	-	-	-	-	-	-	-	-	94,191
Foreign Net Cash Flow	34,131	30,502	29,845	31,039	32,280	33,571	34,914	36,311	44,658	109,441
Real Foreign Cash Flow	21,526	18,497	17,403	17,403	17,403	17,403	17,403	17,403	20,580	(7,714)
Foreign Real Return on Equity										

SIBERIAN GAS PROCESSING PLANT
Data and Key Results

TIMING DATA

Cost Estimate Month	Oct 93	First, Last Operation Month	Jan 96 Dec 15
Financial Closing Month	Jan 95	Economic Life	20.00

ENGINEERING DATA

	1994	1995	1996	1997	1998	1999	2000	2001
Rated Capacity (BCM/yr)in 1996, 1998	2.14	4.28						
Stream Factor		-	100%	100%	100%	100%	100%	100%
Operations Partial Year Factor	-	-	1.000	1.000	1.000	100%	100%	100%
Wet Gas Processed (MCM)	-	-	2.14	2.14	4.28	4.28	4.28	4.28
Dry Gas Production (BCM)	-	-	1.80	1.91	3.76	3.76	3.76	3.76
NGL Production (MMTons)	-	-	0.36	0.49	1.07	1.07	1.07	1.07

REVENUE DATA (1996 $'s)

NGL Domestic Price ($/Ton)	67.86	Domestic Gas Price ($/MCM)	17.09
NGL Export Price ($/Ton)	144.00	Export Gas Price ($/MCM)	90.00
% NGL for Export	100%	% Dry Gas for Export	-

OPERATING COST DATA (1993 $000's)

			TRANSPORT COSTS (1996 $'s)	DOM	EXP
Wet Gas Feedstock Cost ($/MCM)	-		Dry Gas In-Russia Costs ($/MCM)	-	40.00
Chemicals Cost	382		Dry Gas Export Costs		32.00
Utility Cost	19,432		NGL In-Russia Costs ($/Ton)	1.94	36.55
Maintenance Cost	985		NGL Pipeline Costs	43.52	43.52
Labor Cost, Benefits	1,364	518	NGL Port Loading Charge		1.62
Other Expenses	10,134		NGL Shipping Cost		15.10

CAPITAL COST DATA (1993 $000's)

	1995	1996	1997	Total
Gubkinsky GPP Expansion	43,700	157,500	90,300	291,500
Tarasovsky Gas Processing Plant	-	-	-	-
Gas Gathering Systems Cost	17,900	53,700	40,200	111,800
Metering Facilities Cost	440	1,290	970	2,700
Contributed Assets	9,841	21,937	11,031	42,809
Other Owners Costs	8,000	-	-	8,000
Infrastructure Costs	9,306	31,874	19,721	60,900
Initial Working Capital	2,839	-	-	2,839
Capital Costs	92,026	266,300	162,222	520,548

WORKING CAPITAL DATA

Days Receivables	45
Days Payables	45

FINANCING DATA

	WB/Other	Loan
% of Permanent Financing	70%	
Loan Amount, Commitment	420,176	420,176
Loan Interest Rate	8.15%	
Start of Repayment, Repayment Period	Jan 98	9.0
Commitment Fees %	0.25%	
Upfront Fee %	-	
Other Fin Fees & Close Costs (%, Amt)	-	

KEY RESULTS SUMMARY

Real Return on Investment (no taxes)	13.9%
Unleveraged Payback (Yrs)	5.1
Nominal NPV (Oct '93) @ 15.0%	57,041
Real Return on Equity	11.7%
Leveraged Payback (Yrs)	7.4
Nominal NPV (Oct '93) @ 15.0%	7,777
Min Debt Service Coverage	113%
Average Debt Service Coverage	147%

FINANCING DATA (cont'd)

	Actual
Required Reserves (1st Operating Yr)	39,273
Cash Flow Dedicated to Reserves	100%
Reinvestment Rate	3.0%

TAX DATA

Tax & Book In Service Month	Jan 96
Profits Tax	32.00%
15% Yr SL Property %	100.0%
Carryforward Years	5
VAT Tax (% of CapEx)	20.0%
Property Tax (% of Fixed Assets)	-
Road Tax (% of Revenues)	0.4%
Dry Gas Export Tariff ('93 $/MCM)	-
NGL Export Tariff ('93 $/Ton)	-

ECONOMIC DATA

Global Inflation Rate	2.8% **
Capital Cost Esc Rate	2.8%
O&M Esc Rate	2.8%
Export Gas Price Esc Rate	2.8%
Domestic Gas Price Esc Rate	2.8%
Export NGL Price Esc Rate	2.8%
Domestic NGL Price Esc Rate	2.8%

** Until 2000, 4% thereafter
(all escalation equivalent to inflation)

SENSITIVITY ANALYSIS FACTORS

O&M Cost	1.00
Gas Price	1.00
NGL Price	1.00
Capital Cost	1.00
Transport Cost	1.00
Wet Gas Price	1.00

051 1640

SIBERIAN GAS PROCESSING PLANT
Annual Sources and Uses of Funds During Construction

($US Thousands)

	1995	1996	1997	Total	%
SOURCES OF FUNDS					
World Bank/Other Loan	68,886	207,542	143,748	420,176	70%
SIBNG Cash Equity	-	-	-	-	-
PNG Cash Equity	-	-	-	-	-
Gasprom Cash Equity	4,920	10,968	5,516	21,405	4%
SIBNG Equity	4,920	10,968	5,516	21,405	4%
PNG Equity	4,920	10,968	5,516	21,405	4%
Foreign Equity	14,761	32,905	16,547	64,214	11%
JV Operating Cash Flow	-	23,137	28,512	51,648	9%
Total Sources of Funds	98,408	296,489	205,354	600,251	100%
USES OF FUNDS					
Gubkinsky GPP Expansion	45,950	169,606	99,266	314,821	
Tarasovsky Gas Processing Plant	-	-	-	-	
Gas Gathering Systems Cost	18,820	57,765	44,281	120,866	
Metering Facilities Costs	463	1,388	1,068	2,919	
Infrastructure Costs	9,785	34,314	21,692	65,791	
Contributed Assets	9,841	21,937	11,031	42,809	
Other Owners Costs	8,281	-	-	8,281	
Initial Working Capital	3,000	-	-	3,000	
Capital Costs	96,139	285,008	177,339	558,486	93%
Other Loan Interest	1,260	10,771	27,844	39,876	
Other Loan Commitment Fees	1,010	709	170	1,890	
Upfront Fees	-	-	-	-	
Financing Costs	2,270	11,481	28,015	41,765	7%
Total Uses of Funds	98,408	296,489	205,354	600,251	100%

	$	%
Total Debt	420,176	70%
Operating Cash	51,648	9%
Equity Requirement	128,427	21%
	600,251	100%

MEMORANDA	WB/Other Loan	
Loan Draws, Amount	420,176	
Standby Facility	-	
Constr Loan Draws + Standby, Commitment	420,176	420,176
Constr Loan Int Rate	8.15%	
Commitment Fee Rate	0.25%	
Upfront Fee Rate	-	
Other Financing Fees (%, Amt)	-	
Repayment Period	9.0	

** NOTE: ANNUAL SANDU STATEMENT IS FOR PRESENTATION ONLY. VALUES ARE FROM QUARTERLY CALCULATIONS.

VAT TAX FUNDING				
VAT Tax	15,003	52,614	33,262	100,879
VAT Recovery Expressed in $'s	435	8,945	30,692	40,072
Net VAT Payment	14,569	43,669	2,570	60,807
PNG Cash Equity for VAT	2,428	7,278	428	10,135
SNGP Cash Equity for VAT	2,428	7,278	428	10,135
Gasprom Cash Equity for VAT	2,428	7,278	428	10,135
Foreign Equity for VAT	7,284	21,834	1,285	30,404
Cash Equity for VAT	14,569	43,669	2,570	60,807

Equity Requirement	128,427
Equity for VAT	60,807
Total Equity	189,234

052

SIBERIAN GASS PROCESSING PLANT
Equity Returns

(Thousands)

	1994	1995	1996	1997	1998	1999	2000	2001	2002	2003	2004	2005	2006
EQUITY INVESTMENT													
SNGP Equity	-	7,349	18,247	5,944	-	-	-	-	-	-	-	-	-
PNG Equity	-	7,349	18,247	5,944	-	-	-	-	-	-	-	-	-
Gasprom Equity	-	7,349	18,247	5,944	-	-	-	-	-	-	-	-	-
Foreign Equity	-	22,046	54,740	17,832	-	-	-	-	-	-	-	-	-
Additional Equity	-	-	-	-	-	-	-	-	-	-	-	-	-
Total Equity	-	44,091	109,479	35,664	-	-	-	-	-	-	-	-	-
CUMULATIVE EQUITY INVESTMENT													
SNGP Equity Holdings	-	7,349	25,595	31,539	31,539	31,539	31,539	31,539	31,539	31,539	31,539	31,539	31,539
PNG Equity Holdings	-	7,349	25,595	31,539	31,539	31,539	31,539	31,539	31,539	31,539	31,539	31,539	31,539
Gasprom Equity Holdings	-	7,349	25,595	31,539	31,539	31,539	31,539	31,539	31,539	31,539	31,539	31,539	31,539
Foreign Equity Holdings	-	22,046	76,785	94,617	94,617	94,617	94,617	94,617	94,617	94,617	94,617	94,617	94,617
CS Equity Position	-	44,091	153,570	189,234	189,234	189,234	189,234	189,234	189,234	189,234	189,234	189,234	189,234
PROJECT RETURN ON EQUITY													
CS Dividends	-	-	-	-	-	6,877	29,496	25,852	33,108	38,878	41,186	31,098	51,411
Less: Equity Investment	-	44,091	109,479	35,664	-	-	-	-	-	-	-	-	-
Net Cash Flow	-	(44,091)	(109,479)	(35,664)	-	6,877	29,496	25,852	33,108	38,878	41,186	31,098	51,411
Cumulative	-	(44,091)	(153,570)	(189,234)	(189,234)	(182,357)	(152,861)	(127,009)	(93,901)	(55,023)	(13,837)	17,262	68,672
Real Net Cash Flow	-	(42,011)	(101,473)	(32,156)	-	5,868	24,480	20,630	25,405	28,685	29,219	21,214	33,721
Real Return on Equity	11.7%												

SIBERIAN GASS PROCESSING PLANT
Equity Returns

(Thousands)

	1994	1995	1996	1997	1998	1999	2000	2001	2002	2003	2004	2005	2006
SNGP RETURNS													
SNGP Share of Common Stock		17%	17%	17%	17%	17%	17%	17%	17%	17%	17%	17%	17%
CS Dividends	-	-	-	-	-	6,877	29,496	25,852	33,108	38,878	41,186	31,098	51,411
SNGP CS Dividends		-	-	-	-	1,146	4,916	4,309	5,518	6,480	6,864	5,183	8,568
SNGP CS Dividends		-	-	-	-	1,146	4,916	4,309	5,518	6,480	6,864	5,183	8,568
Plus: SNGP NGL Pipeline Marginal Profit	-	-	-	-	-	-	-	-	-	-	-	-	-
Less: SNGP Equity	-	7,349	18,247	5,944	-	-	-	-	-	-	-	-	-
SNGP Net Cash Flow	-	(7,349)	(18,247)	(5,944)	-	1,146	4,916	4,309	5,518	6,480	6,864	5,183	8,568
Real SNGP Net Cash Flow	-	(7,002)	(16,912)	(5,359)	-	978	4,080	3,438	4,234	4,781	4,870	3,536	5,620
SNGP Real Return on Equity	11.7%												
PNG RETURNS													
PNG Share of Common Stock		17%	17%	17%	17%	17%	17%	17%	17%	17%	17%	17%	17%
CS Dividends	-	-	-	-	-	6,877	29,496	25,852	33,108	38,878	41,186	31,098	51,411
PNG CS Dividends		-	-	-	-	1,146	4,916	4,309	5,518	6,480	6,864	5,183	8,568
PNG CS Dividends		-	-	-	-	1,146	4,916	4,309	5,518	6,480	6,864	5,183	8,568
Plus: PNG Wet Gas Marginal Profit	-	-	-	-	-	-	-	-	-	-	-	-	-
Less: PNG Equity	-	7,349	18,247	5,944	-	-	-	-	-	-	-	-	-
PNG Net Cash Flow	-	(7,349)	(18,247)	(5,944)	-	1,146	4,916	4,309	5,518	6,480	6,864	5,183	8,568
Real PNG Net Cash Flow	-	(7,002)	(16,912)	(5,359)	-	978	4,080	3,438	4,234	4,781	4,870	3,536	5,620
PNG Real Return on Equity	11.7%												
GASPROM RETURNS													
Gasprom Share of Common Stock		17%	17%	17%	17%	17%	17%	17%	17%	17%	17%	17%	17%
CS Dividends	-	-	-	-	-	6,877	29,496	25,852	33,108	38,878	41,186	31,098	51,411
Gasprom CS Dividends		-	-	-	-	1,146	4,916	4,309	5,518	6,480	6,864	5,183	8,568
Gasprom CS Dividends		-	-	-	-	1,146	4,916	4,309	5,518	6,480	6,864	5,183	8,568
Plus: Gasprom Transport Marginal Profit	-	-	-	-	-	-	-	-	-	-	-	-	-
Less: Gasprom Equity	-	7,349	18,247	5,944	-	-	-	-	-	-	-	-	-
Gasprom Net Cash Flow	-	(7,349)	(18,247)	(5,944)	-	1,146	4,916	4,309	5,518	6,480	6,864	5,183	8,568
Real Gasprom Net Cash Flow	-	(7,002)	(16,912)	(5,359)	-	978	4,080	3,438	4,234	4,781	4,870	3,536	5,620
Gasprom Real Return on Equity	11.7%												
FOREIGN INVESTOR RETURNS													
Foreign Share of Common Stock		50%	50%	50%	50%	50%	50%	50%	50%	50%	50%	50%	50%
CS Dividends	-	-	-	-	-	6,877	29,496	25,852	33,108	38,878	41,186	31,098	51,411
Foreign CS Dividends		-	-	-	-	3,439	14,748	12,926	16,554	19,439	20,593	15,549	25,705
Foreign CS Dividends		-	-	-	-	3,439	14,748	12,926	16,554	19,439	20,593	15,549	25,705
Less: Foreign Equity	-	22,046	54,740	17,832	-	-	-	-	-	-	-	-	-
Less: Additional Equity Investment	-	-	-	-	-	-	-	-	-	-	-	-	-
Foreign Net Cash Flow	-	(22,046)	(54,740)	(17,832)	-	3,439	14,748	12,926	16,554	19,439	20,593	15,549	25,705
Real Foreign Cash Flow	-	(21,006)	(50,736)	(16,078)	-	2,934	12,240	10,315	12,702	14,342	14,609	10,607	16,860
Foreign Real Return on Equity	11.7%												

SIBERIAN GASS PROCESSING PLANT
Equity Returns

(Thousands)

	2007	2008	2009	2010	2011	2012	2013	2014	2015	Total
EQUITY INVESTMENT										
SNGP Equity	-	-	-	-	-	-	-	-	-	31,539
PNG Equity	-	-	-	-	-	-	-	-	-	31,539
Gasprom Equity	-	-	-	-	-	-	-	-	-	31,539
Foreign Equity	-	-	-	-	-	-	-	-	-	94,617
Additional Equity	-	-	-	-	-	-	-	-	-	-
Total Equity	-	-	-	-	-	-	-	-	-	189,234
CUMULATIVE EQUITY INVESTMENT										
SNGP Equity Holdings	31,539	31,539	31,539	31,539	31,539	31,539	31,539	31,539	31,539	
PNG Equity Holdings	31,539	31,539	31,539	31,539	31,539	31,539	31,539	31,539	31,539	
Gasprom Equity Holdings	31,539	31,539	31,539	31,539	31,539	31,539	31,539	31,539	31,539	
Foreign Equity Holdings	94,617	94,617	94,617	94,617	94,617	94,617	94,617	94,617	94,617	
CS Equity Position	189,234	189,234	189,234	189,234	189,234	189,234	189,234	189,234	189,234	
PROJECT RETURN ON EQUITY										
CS Dividends	77,656	80,763	83,993	87,353	90,847	94,481	98,260	102,190	125,682	1,099,131
Less: Equity Investment	-	-	-	-	-	-	-	-	-	189,234
Net Cash Flow	77,656	80,763	83,993	87,353	90,847	94,481	98,260	102,190	125,682	909,897
Cumulative	146,329	227,091	311,084	398,437	489,284	583,764	682,024	784,215	909,897	
Real Net Cash Flow	48,977	48,977	48,977	48,977	48,977	48,977	48,977	48,977	57,919	463,314
Real Return on Equity										

SIBERIAN GASS PROCESSING PLANT
Equity Returns

(Thousands)

	2007	2008	2009	2010	2011	2012	2013	2014	2015	Total
SNGP RETURNS										
SNGP Share of Common Stock	17%	17%	17%	17%	17%	17%	17%	17%	17%	
CS Dividends	77,656	80,763	83,993	87,353	90,847	94,481	98,260	102,190	125,682	1,099,131
SNGP CS Dividends	12,943	13,460	13,999	14,559	15,141	15,747	16,377	17,032	20,947	183,189
SNGP CS Dividends	12,943	13,460	13,999	14,559	15,141	15,747	16,377	17,032	20,947	183,189
Plus: SNGP NGL Pipeline Marginal Profit	-	-	-	-	-	-	-	-	-	-
Less: SNGP Equity	-	-	-	-	-	-	-	-	-	31,539
SNGP Net Cash Flow	12,943	13,460	13,999	14,559	15,141	15,747	16,377	17,032	20,947	151,649
Real SNGP Net Cash Flow	8,163	8,163	8,163	8,163	8,163	8,163	8,163	8,163	9,653	77,219
SNGP Real Return on Equity										
PNG RETURNS										
PNG Share of Common Stock	17%	17%	17%	17%	17%	17%	17%	17%	17%	
CS Dividends	77,656	80,763	83,993	87,353	90,847	94,481	98,260	102,190	125,682	1,099,131
PNG CS Dividends	12,943	13,460	13,999	14,559	15,141	15,747	16,377	17,032	20,947	183,189
PNG CS Dividends	12,943	13,460	13,999	14,559	15,141	15,747	16,377	17,032	20,947	183,189
Plus: PNG Wet Gas Marginal Profit	-	-	-	-	-	-	-	-	-	-
Less: PNG Equity	-	-	-	-	-	-	-	-	-	31,539
PNG Net Cash Flow	12,943	13,460	13,999	14,559	15,141	15,747	16,377	17,032	20,947	151,649
Real PNG Net Cash Flow	8,163	8,163	8,163	8,163	8,163	8,163	8,163	8,163	9,653	77,219
PNG Real Return on Equity										
GASPROM RETURNS										
Gasprom Share of Common Stock	17%	17%	17%	17%	17%	17%	17%	17%	17%	
CS Dividends	77,656	80,763	83,993	87,353	90,847	94,481	98,260	102,190	125,682	1,099,131
Gasprom CS Dividends	12,943	13,460	13,999	14,559	15,141	15,747	16,377	17,032	20,947	183,189
Gasprom CS Dividends	12,943	13,460	13,999	14,559	15,141	15,747	16,377	17,032	20,947	183,189
Plus: Gasprom Transport Marginal Profit	-	-	-	-	-	-	-	-	-	-
Less: Gasprom Equity	-	-	-	-	-	-	-	-	-	31,539
Gasprom Net Cash Flow	12,943	13,460	13,999	14,559	15,141	15,747	16,377	17,032	20,947	151,649
Real Gasprom Net Cash Flow	8,163	8,163	8,163	8,163	8,163	8,163	8,163	8,163	9,653	77,219
Gasprom Real Return on Equity										
FOREIGN INVESTOR RETURNS										
Foreign Share of Common Stock	50%	50%	50%	50%	50%	50%	50%	50%	50%	
CS Dividends	77,656	80,763	83,993	87,353	90,847	94,481	98,260	102,190	125,682	1,099,131
Foreign CS Dividends	38,828	40,381	41,997	43,676	45,423	47,240	49,130	51,095	62,841	549,566
Foreign CS Dividends	38,828	40,381	41,997	43,676	45,423	47,240	49,130	51,095	62,841	549,566
Less: Foreign Equity	-	-	-	-	-	-	-	-	-	94,617
Less: Additional Equity Investment	-	-	-	-	-	-	-	-	-	-
Foreign Net Cash Flow	38,828	40,381	41,997	43,676	45,423	47,240	49,130	51,095	62,841	454,948
Real Foreign Cash Flow	24,488	24,488	24,488	24,488	24,488	24,488	24,488	24,488	28,959	231,657
Foreign Real Return on Equity										

SIBERIAN GAS PROCESSING PLANT
Data and Key Results

TIMING DATA

Cost Estimate Month	Oct 93	First, Last Operation Month	Jan 96 Dec 15
Financial Closing Month	Jan 95	Economic Life	20.00

ENGINEERING DATA

	1994	1995	1996	1997	1998	1999	2000	2001
Rated Capacity (BCM/yr)in 1996, 1998	2.14	4.28						
Stream Factor		-	100%	100%	100%	100%	100%	100%
Operations Partial Year Factor	-	-	1.000	1.000	1.000	100%	100%	100%
Wet Gas Processed (MCM)	-	-	2.14	2.14	4.28	4.28	4.28	4.28
Dry Gas Production (BCM)	-	-	1.80	1.91	3.76	3.76	3.76	3.76
NGL Production (MMTons)	-	-	0.36	0.49	1.07	1.07	1.07	1.07

REVENUE DATA (1996 $'s)

NGL Domestic Price ($/Ton)	67.86	Domestic Gas Price ($/MCM)	21.36
NGL Export Price ($/Ton)	144.00	Export Gas Price ($/MCM)	112.50
% NGL for Export	100%	% Dry Gas for Export	-

OPERATING COST DATA (1993 $000's)

Wet Gas Feedstock Cost ($/MCM)	-	
Chemicals Cost	382	
Utility Cost	19,432	
Maintenance Cost	985	
Labor Cost, Benefits	1,364	518
Other Expenses	10,134	

TRANSPORT COSTS (1996 $'s)

	DOM	EXP
Dry Gas In-Russia Costs ($/MCM)	-	40.00
Dry Gas Export Costs		32.00
NGL In-Russia Costs ($/Ton)	1.94	36.55
NGL Pipeline Costs	43.52	43.52
NGL Port Loading Charge		1.62
NGL Shipping Cost		15.10

CAPITAL COST DATA (1993 $000's)

	1995	1996	1997	Total
Gubkinsky GPP Expansion	43,700	157,500	90,300	291,500
Tarasovsky Gas Processing Plant	-	-	-	-
Gas Gathering Systems Cost	17,900	53,700	40,200	111,800
Metering Facilities Cost	440	1,290	970	2,700
Contributed Assets	9,840	20,351	8,948	39,138
Other Owners Costs	8,000	-	-	8,000
Infrastructure Costs	9,306	31,874	19,721	60,900
Initial Working Capital	2,839	-	-	2,839
Capital Costs	92,025	264,714	160,138	516,877

WORKING CAPITAL DATA

Days Receivables	45
Days Payables	45

FINANCING DATA

	WB/Other Loan	
% of Permanent Financing	70%	
Loan Amount, Commitment	417,477	417,477
Loan Interest Rate	8.15%	
Start of Repayment, Repayment Period	Jan 98	9.0
Commitment Fees %	0.25%	
Upfront Fee %	-	
Other Fin Fees & Close Costs (%, Amt)	-	

KEY RESULTS SUMMARY

Real Return on Investment (no taxes)	17.4%
Unleveraged Payback (Yrs)	4.2
Nominal NPV (Oct '93) @ 15.0%	135,199
Real Return on Equity	17.1%
Leveraged Payback (Yrs)	4.9
Nominal NPV (Oct '93) @ 15.0%	70,458
Min Debt Service Coverage	134%
Average Debt Service Coverage	172%

FINANCING DATA (cont'd)

	Actual
Required Reserves (1st Operating Yr)	39,021
Cash Flow Dedicated to Reserves	100%
Reinvestment Rate	3.0%

TAX DATA

Tax & Book In Service Month	Jan 96
Profits Tax	32.00%
15% Yr SL Property %	100.0%
Carryforward Years	5
VAT Tax (% of CapEx)	20.0%
Property Tax (% of Fixed Assets)	-
Road Tax (% of Revenues)	0.4%
Dry Gas Export Tariff ('93 $/MCM)	-
NGL Export Tariff ('93 $/Ton)	-

ECONOMIC DATA

Global Inflation Rate	2.8% **
Capital Cost Esc Rate	2.8%
O&M Esc Rate	2.8%
Export Gas Price Esc Rate	2.8%
Domestic Gas Price Esc Rate	2.8%
Export NGL Price Esc Rate	2.8%
Domestic NGL Price Esc Rate	2.8%

** Until 2000, 4% thereafter
(all escalation equivalent to inflation)

SENSITIVITY ANALYSIS FACTORS

O&M Cost	1.00
Gas Price	1.25
NGL Price	1.00
Capital Cost	1.00
Transport Cost	1.00
Wet Gas Price	1.00

1547

SIBERIAN GAS PROCESSING PLANT
Annual Sources and Uses of Funds During Construction

($US Thousands)

	1995	1996	1997	Total	%
SOURCES OF FUNDS					
World Bank/Other Loan	68,881	206,404	142,192	417,477	70%
SIBNG Cash Equity	-	-	-	-	-
PNG Cash Equity	-	-	-	-	-
Gasprom Cash Equity	4,920	10,175	4,474	19,569	3%
SIBNG Equity	4,920	10,175	4,474	19,569	3%
PNG Equity	4,920	10,175	4,474	19,569	3%
Foreign Equity	14,760	30,526	13,421	58,708	10%
JV Operating Cash Flow	-	27,407	34,097	61,503	10%
Total Sources of Funds	98,401	294,864	203,132	596,396	100%
USES OF FUNDS					
Gubkinsky GPP Expansion	45,950	169,606	99,266	314,821	
Tarasovsky Gas Processing Plant	-	-	-	-	
Gas Gathering Systems Cost	18,820	57,765	44,281	120,866	
Metering Facilities Costs	463	1,388	1,068	2,919	
Infrastructure Costs	9,785	34,314	21,692	65,791	
Contributed Assets	9,840	20,351	8,948	39,138	
Other Owners Costs	8,281	-	-	8,281	
Initial Working Capital	3,000	-	-	3,000	
Capital Costs	96,138	283,422	175,255	554,816	93%
Other Loan Interest	1,260	10,737	27,708	39,706	
Other Loan Commitment Fees	1,003	704	168	1,875	
Upfront Fees	-	-	-	-	
Financing Costs	2,263	11,441	27,876	41,580	7%
Total Uses of Funds	98,401	294,864	203,132	596,396	100%

	$	%
Total Debt	417,477	70%
Operating Cash	61,503	10%
Equity Requirement	117,415	20%
	596,396	100%

MEMORANDA	WB/Other Loan	
Loan Draws, Amount	417,477	
Standby Facility	-	
Constr Loan Draws + Standby, Commitment	417,477	417,477
Constr Loan Int Rate	8.15%	
Commitment Fee Rate	0.25%	
Upfront Fee Rate	-	
Other Financing Fees (%, Amt)	-	
Repayment Period	9.0	

** NOTE: ANNUAL SANDU STATEMENT IS FOR PRESENTATION ONLY. VALUES ARE FROM QUARTERLY CALCULATIONS.

VAT TAX FUNDING				
VAT Tax	15,003	52,614	33,262	100,879
VAT Recovery Expressed in $'s	435	8,945	30,692	40,072
Net VAT Payment	14,569	43,669	2,570	60,807
PNG Cash Equity for VAT	2,428	7,278	428	10,135
SNGP Cash Equity for VAT	2,428	7,278	428	10,135
Gasprom Cash Equity for VAT	2,428	7,278	428	10,135
Foreign Equity for VAT	7,284	21,834	1,285	30,404
Cash Equity for VAT	14,569	43,669	2,570	60,807

Equity Requirement	117,415
Equity for VAT	60,807
Total Equity	178,223

058

SIBERIAN GASS PROCESSING PLANT
Equity Returns

(Thousands)

	1994	1995	1996	1997	1998	1999	2000	2001	2002	2003	2004	2005	2006
EQUITY INVESTMENT													
SNGP Equity	-	7,348	17,454	4,902	-	-	-	-	-	-	-	-	-
PNG Equity	-	7,348	17,454	4,902	-	-	-	-	-	-	-	-	-
Gasprom Equity	-	7,348	17,454	4,902	-	-	-	-	-	-	-	-	-
Foreign Equity	-	22,045	52,361	14,706	-	-	-	-	-	-	-	-	-
Additional Equity	-	-	-	-	-	-	-	-	-	-	-	-	-
Total Equity	-	44,089	104,721	29,412	-	-	-	-	-	-	-	-	-
CUMULATIVE EQUITY INVESTMENT													
SNGP Equity Holdings	-	7,348	24,802	29,704	29,704	29,704	29,704	29,704	29,704	29,704	29,704	29,704	29,704
PNG Equity Holdings	-	7,348	24,802	29,704	29,704	29,704	29,704	29,704	29,704	29,704	29,704	29,704	29,704
Gasprom Equity Holdings	-	7,348	24,802	29,704	29,704	29,704	29,704	29,704	29,704	29,704	29,704	29,704	29,704
Foreign Equity Holdings	-	22,045	74,405	89,111	89,111	89,111	89,111	89,111	89,111	89,111	89,111	89,111	89,111
CS Equity Position	-	44,089	148,810	178,223	178,223	178,223	178,223	178,223	178,223	178,223	178,223	178,223	178,223
PROJECT RETURN ON EQUITY													
CS Dividends	-	-	-	-	-	41,757	47,744	44,630	50,579	55,930	54,785	38,405	66,827
Less: Equity Investment	-	44,089	104,721	29,412	-	-	-	-	-	-	-	-	-
Net Cash Flow	-	(44,089)	(104,721)	(29,412)	-	41,757	47,744	44,630	50,579	55,930	54,785	38,405	66,827
Cumulative	-	(44,089)	(148,810)	(178,223)	(178,223)	(136,466)	(88,722)	(44,092)	6,487	62,417	117,202	155,607	222,434
Real Net Cash Flow	-	(42,009)	(97,063)	(26,519)	-	35,626	39,624	35,616	38,811	41,266	38,866	26,198	43,833
Real Return on Equity	17.1%												

059

SIBERIAN GASS PROCESSING PLANT
Equity Returns

(Thousands)

	1994	1995	1996	1997	1998	1999	2000	2001	2002	2003	2004	2005	2006
SNGP RETURNS													
SNGP Share of Common Stock		17%	17%	17%	17%	17%	17%	17%	17%	17%	17%	17%	17%
CS Dividends	-	-	-	-	-	41,757	47,744	44,630	50,579	55,930	54,785	38,405	66,827
SNGP CS Dividends		-	-	-	-	6,959	7,957	7,438	8,430	9,322	9,131	6,401	11,138
SNGP CS Dividends		-	-	-	-	6,959	7,957	7,438	8,430	9,322	9,131	6,401	11,138
Plus: SNGP NGL Pipeline Marginal Profit	-	-	-	-	-	-	-	-	-	-	-	-	-
Less: SNGP Equity	-	7,348	17,454	4,902	-	-	-	-	-	-	-	-	-
SNGP Net Cash Flow	-	(7,348)	(17,454)	(4,902)	-	6,959	7,957	7,438	8,430	9,322	9,131	6,401	11,138
Real SNGP Net Cash Flow	-	(7,002)	(16,177)	(4,420)	-	5,938	6,604	5,936	6,468	6,878	6,478	4,366	7,305
SNGP Real Return on Equity	17.1%												
PNG RETURNS													
PNG Share of Common Stock		17%	17%	17%	17%	17%	17%	17%	17%	17%	17%	17%	17%
CS Dividends	-	-	-	-	-	41,757	47,744	44,630	50,579	55,930	54,785	38,405	66,827
PNG CS Dividends		-	-	-	-	6,959	7,957	7,438	8,430	9,322	9,131	6,401	11,138
PNG CS Dividends		-	-	-	-	6,959	7,957	7,438	8,430	9,322	9,131	6,401	11,138
Plus: PNG Wet Gas Marginal Profit	-	-	-	-	-	-	-	-	-	-	-	-	-
Less: PNG Equity	-	7,348	17,454	4,902	-	-	-	-	-	-	-	-	-
PNG Net Cash Flow	-	(7,348)	(17,454)	(4,902)	-	6,959	7,957	7,438	8,430	9,322	9,131	6,401	11,138
Real PNG Net Cash Flow	-	(7,002)	(16,177)	(4,420)	-	5,938	6,604	5,936	6,468	6,878	6,478	4,366	7,305
PNG Real Return on Equity	17.1%												
GASPROM RETURNS													
Gasprom Share of Common Stock		17%	17%	17%	17%	17%	17%	17%	17%	17%	17%	17%	17%
CS Dividends	-	-	-	-	-	41,757	47,744	44,630	50,579	55,930	54,785	38,405	66,827
Gasprom CS Dividends		-	-	-	-	6,959	7,957	7,438	8,430	9,322	9,131	6,401	11,138
Gasprom CS Dividends		-	-	-	-	6,959	7,957	7,438	8,430	9,322	9,131	6,401	11,138
Plus: Gasprom Transport Marginal Profit	-	-	-	-	-	-	-	-	-	-	-	-	-
Less: Gasprom Equity	-	7,348	17,454	4,902	-	-	-	-	-	-	-	-	-
Gasprom Net Cash Flow	-	(7,348)	(17,454)	(4,902)	-	6,959	7,957	7,438	8,430	9,322	9,131	6,401	11,138
Real Gasprom Net Cash Flow	-	(7,002)	(16,177)	(4,420)	-	5,938	6,604	5,936	6,468	6,878	6,478	4,366	7,305
Gasprom Real Return on Equity	17.1%												
FOREIGN INVESTOR RETURNS													
Foreign Share of Common Stock		50%	50%	50%	50%	50%	50%	50%	50%	50%	50%	50%	50%
CS Dividends	-	-	-	-	-	41,757	47,744	44,630	50,579	55,930	54,785	38,405	66,827
Foreign CS Dividends		-	-	-	-	20,878	23,872	22,315	25,290	27,965	27,392	19,202	33,414
Foreign CS Dividends		-	-	-	-	20,878	23,872	22,315	25,290	27,965	27,392	19,202	33,414
Less: Foreign Equity	-	22,045	52,361	14,706	-	-	-	-	-	-	-	-	-
Less: Additional Equity Investment	-	-	-	-	-	-	-	-	-	-	-	-	-
Foreign Net Cash Flow	-	(22,045)	(52,361)	(14,706)	-	20,878	23,872	22,315	25,290	27,965	27,392	19,202	33,414
Real Foreign Cash Flow	-	(21,005)	(48,532)	(13,259)	-	17,813	19,812	17,808	19,405	20,633	19,433	13,099	21,916
Foreign Real Return on Equity	17.1%												

SIBERIAN GASS PROCESSING PLANT
Equity Returns

(Thousands)

	2007	2008	2009	2010	2011	2012	2013	2014	2015	Total
EQUITY INVESTMENT										
SNGP Equity	-	-	-	-	-	-	-	-	-	29,704
PNG Equity	-	-	-	-	-	-	-	-	-	29,704
Gasprom Equity	-	-	-	-	-	-	-	-	-	29,704
Foreign Equity	-	-	-	-	-	-	-	-	-	89,111
Additional Equity	-	-	-	-	-	-	-	-	-	-
Total Equity	-	-	-	-	-	-	-	-	-	178,223
CUMULATIVE EQUITY INVESTMENT										
SNGP Equity Holdings	29,704	29,704	29,704	29,704	29,704	29,704	29,704	29,704	29,704	
PNG Equity Holdings	29,704	29,704	29,704	29,704	29,704	29,704	29,704	29,704	29,704	
Gasprom Equity Holdings	29,704	29,704	29,704	29,704	29,704	29,704	29,704	29,704	29,704	
Foreign Equity Holdings	89,111	89,111	89,111	89,111	89,111	89,111	89,111	89,111	89,111	
CS Equity Position	178,223	178,223	178,223	178,223	178,223	178,223	178,223	178,223	178,223	
PROJECT RETURN ON EQUITY										
CS Dividends	93,534	97,276	101,167	105,213	109,422	113,799	118,351	123,085	151,380	1,413,884
Less: Equity Investment	-	-	-	-	-	-	-	-	-	178,223
Net Cash Flow	93,534	97,276	101,167	105,213	109,422	113,799	118,351	123,085	151,380	1,235,661
Cumulative	315,969	413,245	514,411	619,625	729,047	842,846	961,196	1,084,281	1,235,661	
Real Net Cash Flow	58,991	58,991	58,991	58,991	58,991	58,991	58,991	58,991	69,761	675,937
Real Return on Equity										

SIBERIAN GASS PROCESSING PLANT
Equity Returns
(Thousands)

	2007	2008	2009	2010	2011	2012	2013	2014	2015	Total
SNGP RETURNS										
SNGP Share of Common Stock	17%	17%	17%	17%	17%	17%	17%	17%	17%	
CS Dividends	93,534	97,276	101,167	105,213	109,422	113,799	118,351	123,085	151,380	1,413,884
SNGP CS Dividends	15,589	16,213	16,861	17,536	18,237	18,966	19,725	20,514	25,230	235,647
SNGP CS Dividends	15,589	16,213	16,861	17,536	18,237	18,966	19,725	20,514	25,230	235,647
Plus: SNGP NGL Pipeline Marginal Profit	-	-	-	-	-	-	-	-	-	-
Less: SNGP Equity	-	-	-	-	-	-	-	-	-	29,704
SNGP Net Cash Flow	15,589	16,213	16,861	17,536	18,237	18,966	19,725	20,514	25,230	205,944
Real SNGP Net Cash Flow	9,832	9,832	9,832	9,832	9,832	9,832	9,832	9,832	11,627	112,656
SNGP Real Return on Equity										
PNG RETURNS										
PNG Share of Common Stock	17%	17%	17%	17%	17%	17%	17%	17%	17%	
CS Dividends	93,534	97,276	101,167	105,213	109,422	113,799	118,351	123,085	151,380	1,413,884
PNG CS Dividends	15,589	16,213	16,861	17,536	18,237	18,966	19,725	20,514	25,230	235,647
PNG CS Dividends	15,589	16,213	16,861	17,536	18,237	18,966	19,725	20,514	25,230	235,647
Plus: PNG Wet Gas Marginal Profit	-	-	-	-	-	-	-	-	-	-
Less: PNG Equity	-	-	-	-	-	-	-	-	-	29,704
PNG Net Cash Flow	15,589	16,213	16,861	17,536	18,237	18,966	19,725	20,514	25,230	205,944
Real PNG Net Cash Flow	9,832	9,832	9,832	9,832	9,832	9,832	9,832	9,832	11,627	112,656
PNG Real Return on Equity										
GASPROM RETURNS										
Gasprom Share of Common Stock	17%	17%	17%	17%	17%	17%	17%	17%	17%	
CS Dividends	93,534	97,276	101,167	105,213	109,422	113,799	118,351	123,085	151,380	1,413,884
Gasprom CS Dividends	15,589	16,213	16,861	17,536	18,237	18,966	19,725	20,514	25,230	235,647
Gasprom CS Dividends	15,589	16,213	16,861	17,536	18,237	18,966	19,725	20,514	25,230	235,647
Plus: Gasprom Transport Marginal Profit	-	-	-	-	-	-	-	-	-	-
Less: Gasprom Equity	-	-	-	-	-	-	-	-	-	29,704
Gasprom Net Cash Flow	15,589	16,213	16,861	17,536	18,237	18,966	19,725	20,514	25,230	205,944
Real Gasprom Net Cash Flow	9,832	9,832	9,832	9,832	9,832	9,832	9,832	9,832	11,627	112,656
Gasprom Real Return on Equity										
FOREIGN INVESTOR RETURNS										
Foreign Share of Common Stock	50%	50%	50%	50%	50%	50%	50%	50%	50%	
CS Dividends	93,534	97,276	101,167	105,213	109,422	113,799	118,351	123,085	151,380	1,413,884
Foreign CS Dividends	46,767	48,638	50,583	52,607	54,711	56,899	59,175	61,542	75,690	706,942
Foreign CS Dividends	46,767	48,638	50,583	52,607	54,711	56,899	59,175	61,542	75,690	706,942
Less: Foreign Equity	-	-	-	-	-	-	-	-	-	89,111
Less: Additional Equity Investment	-	-	-	-	-	-	-	-	-	-
Foreign Net Cash Flow	46,767	48,638	50,583	52,607	54,711	56,899	59,175	61,542	75,690	617,831
Real Foreign Cash Flow	29,495	29,495	29,495	29,495	29,495	29,495	29,495	29,495	34,881	337,968
Foreign Real Return on Equity										

SIBERIAN GAS PROCESSING PLANT
Data and Key Results

TIMING DATA

Cost Estimate Month	Oct 93	First, Last Operation Month	Jan 96	Dec 15
Financial Closing Month	Jan 95	Economic Life	20.00	

ENGINEERING DATA

	1994	1995	1996	1997	1998	1999	2000	2001
Rated Capacity (BCM/yr) in 1996, 1998	2.14	4.28						
Stream Factor		-	100%	100%	100%	100%	100%	100%
Operations Partial Year Factor	-	-	1.000	1.000	1.000	100%	100%	100%
Wet Gas Processed (MCM)	-	-	2.14	2.14	4.28	4.28	4.28	4.28
Dry Gas Production (BCM)	-	-	1.80	1.91	3.76	3.76	3.76	3.76
NGL Production (MMTons)	-	-	0.36	0.49	1.07	1.07	1.07	1.07

REVENUE DATA (1996 $'s)

NGL Domestic Price ($/Ton)	67.86	Domestic Gas Price ($/MCM)	12.82
NGL Export Price ($/Ton)	144.00	Export Gas Price ($/MCM)	67.50
% NGL for Export	100%	% Dry Gas for Export	-

OPERATING COST DATA (1993 $000's)

Wet Gas Feedstock Cost ($/MCM)	-	
Chemicals Cost	382	
Utility Cost	19,432	
Maintenance Cost	985	
Labor Cost, Benefits	1,364	518
Other Expenses	10,134	

TRANSPORT COSTS (1996 $'s)

	DOM	EXP
Dry Gas In-Russia Costs ($/MCM)	-	40.00
Dry Gas Export Costs		32.00
NGL In-Russia Costs ($/Ton)	1.94	36.55
NGL Pipeline Costs	43.52	43.52
NGL Port Loading Charge		1.62
NGL Shipping Cost		15.10

CAPITAL COST DATA (1993 $000's)

	1995	1996	1997	Total
Gubkinsky GPP Expansion	43,700	157,500	90,300	291,500
Tarasovsky Gas Processing Plant	-	-	-	-
Gas Gathering Systems Cost	17,900	53,700	40,200	111,800
Metering Facilities Cost	440	1,290	970	2,700
Contributed Assets	9,842	23,523	13,115	46,480
Other Owners Costs	8,000	-	-	8,000
Infrastructure Costs	9,306	31,874	19,721	60,900
Initial Working Capital	2,839	-	-	2,839
Capital Costs	92,026	267,886	164,306	524,218

WORKING CAPITAL DATA

Days Receivables	45
Days Payables	45

FINANCING DATA

	WB/Other Loan	
% of Permanent Financing	70%	
Loan Amount, Commitment	422,875	422,875
Loan Interest Rate	8.15%	
Start of Repayment, Repayment Period	Jan 98	9.0
Commitment Fees %	0.25%	
Upfront Fee %	-	
Other Fin Fees & Close Costs (%, Amt)	-	

KEY RESULTS SUMMARY

Real Return on Investment (no taxes)	10.1%
Unleveraged Payback (Yrs)	6.5
Nominal NPV (Oct '93) @ 15.0%	(21,117)
Real Return on Equity	6.6%
Leveraged Payback (Yrs)	10.2
Nominal NPV (Oct '93) @ 15.0%	(52,749)
Min Debt Service Coverage	92%
Average Debt Service Coverage	123%

FINANCING DATA (cont'd)

	Actual
Required Reserves (1st Operating Yr)	39,525
Cash Flow Dedicated to Reserves	100%
Reinvestment Rate	3.0%

TAX DATA

Tax & Book In Service Month	Jan 96
Profits Tax	32.00%
15% Yr SL Property %	100.0%
Carryforward Years	5
VAT Tax (% of CapEx)	20.0%
Property Tax (% of Fixed Assets)	-
Road Tax (% of Revenues)	0.4%
Dry Gas Export Tariff ('93 $/MCM)	-
NGL Export Tariff ('93 $/Ton)	-

ECONOMIC DATA

Global Inflation Rate	2.8% **
Capital Cost Esc Rate	2.8%
O&M Esc Rate	2.8%
Export Gas Price Esc Rate	2.8%
Domestic Gas Price Esc Rate	2.8%
Export NGL Price Esc Rate	2.8%
Domestic NGL Price Esc Rate	2.8%

** Until 2000, 4% thereafter
(all escalation equivalent to inflation)

SENSITIVITY ANALYSIS FACTORS

O&M Cost	1.00
Gas Price	0.75
NGL Price	1.00
Capital Cost	1.00
Transport Cost	1.00
Wet Gas Price	1.00

SIBERIAN GAS PROCESSING PLANT
Annual Sources and Uses of Funds During Construction

($US Thousands)

	1995	1996	1997	Total	%
SOURCES OF FUNDS					
World Bank/Other Loan	68,891	208,680	145,304	422,875	70%
SIBNG Cash Equity	-	-	-	-	-
PNG Cash Equity	-	-	-	-	-
Gasprom Cash Equity	4,921	11,761	6,558	23,240	4%
SIBNG Equity	4,921	11,761	6,558	23,240	4%
PNG Equity	4,921	11,761	6,558	23,240	4%
Foreign Equity	14,762	35,284	19,673	69,719	12%
JV Operating Cash Flow	-	18,866	22,927	41,793	7%
Total Sources of Funds	98,416	298,114	207,577	604,107	100%
USES OF FUNDS					
Gubkinsky GPP Expansion	45,950	169,606	99,266	314,821	
Tarasovsky Gas Processing Plant	-	-	-	-	
Gas Gathering Systems Cost	18,820	57,765	44,281	120,866	
Metering Facilities Costs	463	1,388	1,068	2,919	
Infrastructure Costs	9,785	34,314	21,692	65,791	
Contributed Assets	9,842	23,523	13,115	46,480	
Other Owners Costs	8,281	-	-	8,281	
Initial Working Capital	3,000	-	-	3,000	
Capital Costs	96,140	286,594	179,423	562,157	93%
Other Loan Interest	1,260	10,805	27,980	40,046	
Other Loan Commitment Fees	1,016	715	173	1,904	
Upfront Fees	-	-	-	-	
Financing Costs	2,277	11,520	28,153	41,950	7%
Total Uses of Funds	98,416	298,114	207,577	604,107	100%

	$	%
Total Debt	422,875	70%
Operating Cash	41,793	7%
Equity Requirement	139,439	23%
	604,107	100%

MEMORANDA	WB/Other Loan	
Loan Draws, Amount	422,875	
Standby Facility	-	
Constr Loan Draws + Standby, Commitment	422,875	422,875
Constr Loan Int Rate	8.15%	
Commitment Fee Rate	0.25%	
Upfront Fee Rate	-	
Other Financing Fees (%, Amt)	-	
Repayment Period	9.0	

** NOTE: ANNUAL SANDU STATEMENT IS FOR PRESENTATION ONLY. VALUES ARE FROM QUARTERLY CALCULATIONS.

VAT TAX FUNDING				
VAT Tax	15,003	52,614	33,262	100,879
VAT Recovery Expressed in $'s	435	8,945	30,692	40,072
Net VAT Payment	14,569	43,669	2,570	60,807
PNG Cash Equity for VAT	2,428	7,278	428	10,135
SNGP Cash Equity for VAT	2,428	7,278	428	10,135
Gasprom Cash Equity for VAT	2,428	7,278	428	10,135
Foreign Equity for VAT	7,284	21,834	1,285	30,404
Cash Equity for VAT	14,569	43,669	2,570	60,807

Equity Requirement	139,439
Equity for VAT	60,807
Total Equity	200,246

SIBERIAN GASS PROCESSING PLANT
Equity Returns

(Thousands)

	1994	1995	1996	1997	1998	1999	2000	2001	2002	2003	2004	2005	2006
EQUITY INVESTMENT													
SNGP Equity	-	7,349	19,039	6,986	-	-	-	-	-	-	-	-	-
PNG Equity	-	7,349	19,039	6,986	-	-	-	-	-	-	-	-	-
Gasprom Equity	-	7,349	19,039	6,986	-	-	-	-	-	-	-	-	-
Foreign Equity	-	22,047	57,118	20,958	-	-	-	-	-	-	-	-	-
Additional Equity	-	-	-	-	6,128	-	-	-	-	-	-	-	-
Total Equity	-	44,094	114,237	41,916	6,128	-	-	-	-	-	-	-	-
CUMULATIVE EQUITY INVESTMENT													
SNGP Equity Holdings	-	7,349	26,388	33,374	33,374	33,374	33,374	33,374	33,374	33,374	33,374	33,374	33,374
PNG Equity Holdings	-	7,349	26,388	33,374	33,374	33,374	33,374	33,374	33,374	33,374	33,374	33,374	33,374
Gasprom Equity Holdings	-	7,349	26,388	33,374	33,374	33,374	33,374	33,374	33,374	33,374	33,374	33,374	33,374
Foreign Equity Holdings	-	22,047	79,165	100,123	106,251	106,251	106,251	106,251	106,251	106,251	106,251	106,251	106,251
CS Equity Position	-	44,094	158,330	200,246	206,374	206,374	206,374	206,374	206,374	206,374	206,374	206,374	206,374
PROJECT RETURN ON EQUITY													
CS Dividends	-	-	-	-	-	-	-	-	8,863	20,137	23,452	21,117	49,815
Less: Equity Investment	-	44,094	114,237	41,916	6,128	-	-	-	-	-	-	-	-
Net Cash Flow	-	(44,094)	(114,237)	(41,916)	(6,128)	-	-	-	8,863	20,137	23,452	21,117	49,815
Cumulative	-	(44,094)	(158,330)	(200,246)	(206,374)	(206,374)	(206,374)	(206,374)	(197,511)	(177,374)	(153,922)	(132,805)	(82,989)
Real Net Cash Flow	-	(42,013)	(105,883)	(37,792)	(5,375)	-	-	-	6,801	14,857	16,637	14,405	32,675
Real Return on Equity	6.6%												

065

SIBERIAN GASS PROCESSING PLANT
Equity Returns
(Thousands)

	1994	1995	1996	1997	1998	1999	2000	2001	2002	2003	2004	2005	2006
SNGP RETURNS													
SNGP Share of Common Stock		17%	17%	17%	16%	16%	16%	16%	16%	16%	16%	16%	16%
CS Dividends	-	-	-	-	-	-	-	-	8,863	20,137	23,452	21,117	49,815
SNGP CS Dividends		-	-	-	-	-	-	-	1,433	3,257	3,793	3,415	8,056
SNGP CS Dividends		-	-	-	-	-	-	-	1,433	3,257	3,793	3,415	8,056
Plus: SNGP NGL Pipeline Marginal Profit	-	-	-	-	-	-	-	-	-	-	-	-	-
Less: SNGP Equity	-	7,349	19,039	6,986	-	-	-	-	-	-	-	-	-
SNGP Net Cash Flow	-	(7,349)	(19,039)	(6,986)	-	-	-	-	1,433	3,257	3,793	3,415	8,056
Real SNGP Net Cash Flow	-	(7,002)	(17,647)	(6,299)	-	-	-	-	1,100	2,403	2,691	2,330	5,284
SNGP Real Return on Equity	6.5%												
PNG RETURNS													
PNG Share of Common Stock		17%	17%	17%	16%	16%	16%	16%	16%	16%	16%	16%	16%
CS Dividends	-	-	-	-	-	-	-	-	8,863	20,137	23,452	21,117	49,815
PNG CS Dividends		-	-	-	-	-	-	-	1,433	3,257	3,793	3,415	8,056
PNG CS Dividends		-	-	-	-	-	-	-	1,433	3,257	3,793	3,415	8,056
Plus: PNG Wet Gas Marginal Profit	-	-	-	-	-	-	-	-	-	-	-	-	-
Less: PNG Equity	-	7,349	19,039	6,986	-	-	-	-	-	-	-	-	-
PNG Net Cash Flow	-	(7,349)	(19,039)	(6,986)	-	-	-	-	1,433	3,257	3,793	3,415	8,056
Real PNG Net Cash Flow	-	(7,002)	(17,647)	(6,299)	-	-	-	-	1,100	2,403	2,691	2,330	5,284
PNG Real Return on Equity	6.5%												
GASPROM RETURNS													
Gasprom Share of Common Stock		17%	17%	17%	16%	16%	16%	16%	16%	16%	16%	16%	16%
CS Dividends	-	-	-	-	-	-	-	-	8,863	20,137	23,452	21,117	49,815
Gasprom CS Dividends		-	-	-	-	-	-	-	1,433	3,257	3,793	3,415	8,056
Gasprom CS Dividends		-	-	-	-	-	-	-	1,433	3,257	3,793	3,415	8,056
Plus: Gasprom Transport Marginal Profit	-	-	-	-	-	-	-	-	-	-	-	-	-
Less: Gasprom Equity	-	7,349	19,039	6,986	-	-	-	-	-	-	-	-	-
Gasprom Net Cash Flow	-	(7,349)	(19,039)	(6,986)	-	-	-	-	1,433	3,257	3,793	3,415	8,056
Real Gasprom Net Cash Flow	-	(7,002)	(17,647)	(6,299)	-	-	-	-	1,100	2,403	2,691	2,330	5,284
Gasprom Real Return on Equity	6.5%												
FOREIGN INVESTOR RETURNS													
Foreign Share of Common Stock		50%	50%	50%	51%	51%	51%	51%	51%	51%	51%	51%	51%
CS Dividends	-	-	-	-	-	-	-	-	8,863	20,137	23,452	21,117	49,815
Foreign CS Dividends		-	-	-	-	-	-	-	4,563	10,367	12,074	10,872	25,647
Foreign CS Dividends		-	-	-	-	-	-	-	4,563	10,367	12,074	10,872	25,647
Less: Foreign Equity	-	22,047	57,118	20,958	-	-	-	-	-	-	-	-	-
Less: Additional Equity Investment	-	-	-	-	6,128	-	-	-	-	-	-	-	-
Foreign Net Cash Flow	-	(22,047)	(57,118)	(20,958)	(6,128)	-	-	-	4,563	10,367	12,074	10,872	25,647
Real Foreign Cash Flow	-	(21,007)	(52,941)	(18,896)	(5,375)	-	-	-	3,501	7,649	8,566	7,416	16,822
Foreign Real Return on Equity	6.6%												

SIBERIAN GASS PROCESSING PLANT
Equity Returns

(Thousands)

	2007	2008	2009	2010	2011	2012	2013	2014	2015	Total
EQUITY INVESTMENT										
SNGP Equity	-	-	-	-	-	-	-	-	-	33,374
PNG Equity	-	-	-	-	-	-	-	-	-	33,374
Gasprom Equity	-	-	-	-	-	-	-	-	-	33,374
Foreign Equity	-	-	-	-	-	-	-	-	-	100,123
Additional Equity	-	-	-	-	-	-	-	-	-	6,128
Total Equity	-	-	-	-	-	-	-	-	-	206,374
CUMULATIVE EQUITY INVESTMENT										
SNGP Equity Holdings	33,374	33,374	33,374	33,374	33,374	33,374	33,374	33,374	33,374	
PNG Equity Holdings	33,374	33,374	33,374	33,374	33,374	33,374	33,374	33,374	33,374	
Gasprom Equity Holdings	33,374	33,374	33,374	33,374	33,374	33,374	33,374	33,374	33,374	
Foreign Equity Holdings	106,251	106,251	106,251	106,251	106,251	106,251	106,251	106,251	106,251	
CS Equity Position	206,374	206,374	206,374	206,374	206,374	206,374	206,374	206,374	206,374	
PROJECT RETURN ON EQUITY										
CS Dividends	70,257	64,249	66,819	69,492	72,272	75,163	78,169	81,296	99,984	801,086
Less: Equity Investment	-	-	-	-	-	-	-	-	-	206,374
Net Cash Flow	70,257	64,249	66,819	69,492	72,272	75,163	78,169	81,296	99,984	594,712
Cumulative	(12,732)	51,517	118,336	187,828	260,100	335,263	413,432	494,727	594,712	
Real Net Cash Flow	44,310	38,963	38,963	38,963	38,963	38,963	38,963	38,963	46,076	257,437
Real Return on Equity										

SIBERIAN GASS PROCESSING PLANT
Equity Returns

(Thousands)

	2007	2008	2009	2010	2011	2012	2013	2014	2015	Total
SNGP RETURNS										
SNGP Share of Common Stock	16%	16%	16%	16%	16%	16%	16%	16%	16%	
CS Dividends	70,257	64,249	66,819	69,492	72,272	75,163	78,169	81,296	99,984	801,086
SNGP CS Dividends	11,362	10,390	10,806	11,238	11,688	12,155	12,641	13,147	16,169	129,550
SNGP CS Dividends	11,362	10,390	10,806	11,238	11,688	12,155	12,641	13,147	16,169	129,550
Plus: SNGP NGL Pipeline Marginal Profit	-	-	-	-	-	-	-	-	-	-
Less: SNGP Equity	-	-	-	-	-	-	-	-	-	33,374
SNGP Net Cash Flow	11,362	10,390	10,806	11,238	11,688	12,155	12,641	13,147	16,169	96,175
Real SNGP Net Cash Flow	7,166	6,301	6,301	6,301	6,301	6,301	6,301	6,301	7,451	41,582
SNGP Real Return on Equity										
PNG RETURNS										
PNG Share of Common Stock	16%	16%	16%	16%	16%	16%	16%	16%	16%	
CS Dividends	70,257	64,249	66,819	69,492	72,272	75,163	78,169	81,296	99,984	801,086
PNG CS Dividends	11,362	10,390	10,806	11,238	11,688	12,155	12,641	13,147	16,169	129,550
PNG CS Dividends	11,362	10,390	10,806	11,238	11,688	12,155	12,641	13,147	16,169	129,550
Plus: PNG Wet Gas Marginal Profit	-	-	-	-	-	-	-	-	-	-
Less: PNG Equity	-	-	-	-	-	-	-	-	-	33,374
PNG Net Cash Flow	11,362	10,390	10,806	11,238	11,688	12,155	12,641	13,147	16,169	96,175
Real PNG Net Cash Flow	7,166	6,301	6,301	6,301	6,301	6,301	6,301	6,301	7,451	41,582
PNG Real Return on Equity										
GASPROM RETURNS										
Gasprom Share of Common Stock	16%	16%	16%	16%	16%	16%	16%	16%	16%	
CS Dividends	70,257	64,249	66,819	69,492	72,272	75,163	78,169	81,296	99,984	801,086
Gasprom CS Dividends	11,362	10,390	10,806	11,238	11,688	12,155	12,641	13,147	16,169	129,550
Gasprom CS Dividends	11,362	10,390	10,806	11,238	11,688	12,155	12,641	13,147	16,169	129,550
Plus: Gasprom Transport Marginal Profit	-	-	-	-	-	-	-	-	-	-
Less: Gasprom Equity	-	-	-	-	-	-	-	-	-	33,374
Gasprom Net Cash Flow	11,362	10,390	10,806	11,238	11,688	12,155	12,641	13,147	16,169	96,175
Real Gasprom Net Cash Flow	7,166	6,301	6,301	6,301	6,301	6,301	6,301	6,301	7,451	41,582
Gasprom Real Return on Equity										
FOREIGN INVESTOR RETURNS										
Foreign Share of Common Stock	51%	51%	51%	51%	51%	51%	51%	51%	51%	
CS Dividends	70,257	64,249	66,819	69,492	72,272	75,163	78,169	81,296	99,984	801,086
Foreign CS Dividends	36,172	33,078	34,402	35,778	37,209	38,697	40,245	41,855	51,477	412,436
Foreign CS Dividends	36,172	33,078	34,402	35,778	37,209	38,697	40,245	41,855	51,477	412,436
Less: Foreign Equity	-	-	-	-	-	-	-	-	-	100,123
Less: Additional Equity Investment	-	-	-	-	-	-	-	-	-	6,128
Foreign Net Cash Flow	36,172	33,078	34,402	35,778	37,209	38,697	40,245	41,855	51,477	306,185
Real Foreign Cash Flow	22,813	20,060	20,060	20,060	20,060	20,060	20,060	20,060	23,722	132,690
Foreign Real Return on Equity										

SIBERIAN GAS PROCESSING PLANT
Data and Key Results

TIMING DATA

Cost Estimate Month	Oct 93	First, Last Operation Month	Jan 96 Dec 15
Financial Closing Month	Jan 95	Economic Life	20.00

ENGINEERING DATA

	1994	1995	1996	1997	1998	1999	2000	2001
Rated Capacity (BCM/yr)in 1996, 1998	2.14	4.28						
Stream Factor		-	100%	100%	100%	100%	100%	100%
Operations Partial Year Factor	-	-	1.000	1.000	1.000	100%	100%	100%
Wet Gas Processed (MCM)	-	-	2.14	2.14	4.28	4.28	4.28	4.28
Dry Gas Production (BCM)	-	-	1.80	1.91	3.76	3.76	3.76	3.76
NGL Production (MMTons)	-	-	0.36	0.49	1.07	1.07	1.07	1.07

REVENUE DATA (1996 $'s)

NGL Domestic Price ($/Ton)	84.82	Domestic Gas Price ($/MCM)	17.09
NGL Export Price ($/Ton)	180.00	Export Gas Price ($/MCM)	90.00
% NGL for Export	100%	% Dry Gas for Export	-

OPERATING COST DATA (1993 $000's)

Wet Gas Feedstock Cost ($/MCM)	-	
Chemicals Cost	382	
Utility Cost	19,432	
Maintenance Cost	985	
Labor Cost, Benefits	1,364	518
Other Expenses	10,134	

TRANSPORT COSTS (1996 $'s)

	DOM	EXP
Dry Gas In-Russia Costs ($/MCM)	-	40.00
Dry Gas Export Costs		32.00
NGL In-Russia Costs ($/Ton)	1.94	36.55
NGL Pipeline Costs	43.52	43.52
NGL Port Loading Charge		1.62
NGL Shipping Cost		15.10

CAPITAL COST DATA (1993 $000's)

	1995	1996	1997	Total
Gubkinsky GPP Expansion	43,700	157,500	90,300	291,500
Tarasovsky Gas Processing Plant	-	-	-	-
Gas Gathering Systems Cost	17,900	53,700	40,200	111,800
Metering Facilities Cost	440	1,290	970	2,700
Contributed Assets	9,839	19,305	6,737	35,881
Other Owners Costs	8,000	-	-	8,000
Infrastructure Costs	9,306	31,874	19,721	60,900
Initial Working Capital	2,839	-	-	2,839
Capital Costs	92,024	263,668	157,927	513,619

WORKING CAPITAL DATA

Days Receivables	45
Days Payables	45

FINANCING DATA

	WB/Other Loan	
% of Permanent Financing	70%	
Loan Amount, Commitment	415,096	415,100
Loan Interest Rate	8.15%	
Start of Repayment, Repayment Period	Jan 98	9.0
Commitment Fees %	0.25%	
Upfront Fee %	-	
Other Fin Fees & Close Costs (%, Amt)	-	

KEY RESULTS SUMMARY

Real Return on Investment (no taxes)	21.9%
Unleveraged Payback (Yrs)	3.4
Nominal NPV (Oct '93) @ 15.0%	238,982
Real Return on Equity	23.3%
Leveraged Payback (Yrs)	3.3
Nominal NPV (Oct '93) @ 15.0%	143,523
Min Debt Service Coverage	162%
Average Debt Service Coverage	202%

FINANCING DATA (cont'd)

	Actual
Required Reserves (1st Operating Yr)	38,798
Cash Flow Dedicated to Reserves	100%
Reinvestment Rate	3.0%

TAX DATA

Tax & Book In Service Month	Jan 96
Profits Tax	32.00%
15% Yr SL Property %	100.0%
Carryforward Years	5
VAT Tax (% of CapEx)	20.0%
Property Tax (% of Fixed Assets)	-
Road Tax (% of Revenues)	0.4%
Dry Gas Export Tariff ('93 $/MCM)	-
NGL Export Tariff ('93 $/Ton)	-

ECONOMIC DATA

Global Inflation Rate	2.8% **
Capital Cost Esc Rate	2.8%
O&M Esc Rate	2.8%
Export Gas Price Esc Rate	2.8%
Domestic Gas Price Esc Rate	2.8%
Export NGL Price Esc Rate	2.8%
Domestic NGL Price Esc Rate	2.8%

** Until 2000, 4% thereafter
(all escalation equivalent to inflation)

SENSITIVITY ANALYSIS FACTORS

O&M Cost	1.00
Gas Price	1.00
NGL Price	1.25
Capital Cost	1.00
Transport Cost	1.00
Wet Gas Price	1.00

069

SIBERIAN GAS PROCESSING PLANT
Annual Sources and Uses of Funds During Construction

($US Thousands)

	1995	1996	1997	Total	%
SOURCES OF FUNDS					
World Bank/Other Loan	68,876	205,653	140,568	415,096	70%
SIBNG Cash Equity	-	-	-	-	-
PNG Cash Equity	-	-	-	-	-
Gasprom Cash Equity	4,920	9,652	3,368	17,940	3%
SIBNG Equity	4,920	9,652	3,368	17,940	3%
PNG Equity	4,920	9,652	3,368	17,940	3%
Foreign Equity	14,759	28,957	10,105	53,821	9%
JV Operating Cash Flow	-	30,223	40,034	70,256	12%
Total Sources of Funds	98,394	293,790	200,811	592,995	100%
USES OF FUNDS					
Gubkinsky GPP Expansion	45,950	169,606	99,266	314,821	
Tarasovsky Gas Processing Plant	-	-	-	-	
Gas Gathering Systems Cost	18,820	57,765	44,281	120,866	
Metering Facilities Costs	463	1,388	1,068	2,919	
Infrastructure Costs	9,785	34,314	21,692	65,791	
Contributed Assets	9,839	19,305	6,737	35,881	
Other Owners Costs	8,281	-	-	8,281	
Initial Working Capital	3,000	-	-	3,000	
Capital Costs	96,137	282,376	173,044	551,558	93%
Other Loan Interest	1,260	10,715	27,601	39,576	
Other Loan Commitment Fees	997	699	165	1,861	
Upfront Fees	-	-	-	-	
Financing Costs	2,257	11,414	27,766	41,437	7%
Total Uses of Funds	98,394	293,790	200,811	592,995	100%

	$	%
Total Debt	415,096	70%
Operating Cash	70,256	12%
Equity Requirement	107,642	18%
	592,995	100%

MEMORANDA	WB/Other Loan	
Loan Draws, Amount	415,096	
Standby Facility	-	
Constr Loan Draws + Standby, Commitment	415,096	415,100
Constr Loan Int Rate	8.15%	
Commitment Fee Rate	0.25%	
Upfront Fee Rate	-	
Other Financing Fees (%, Amt)	-	
Repayment Period	9.0	

** NOTE: ANNUAL SANDU STATEMENT IS FOR PRESENTATION ONLY. VALUES ARE FROM QUARTERLY CALCULATIONS.

	1995	1996	1997	Total
VAT TAX FUNDING				
VAT Tax	15,003	52,614	33,262	100,879
VAT Recovery Expressed in $'s	435	8,945	30,692	40,072
Net VAT Payment	14,569	43,669	2,570	60,807
PNG Cash Equity for VAT	2,428	7,278	428	10,135
SNGP Cash Equity for VAT	2,428	7,278	428	10,135
Gasprom Cash Equity for VAT	2,428	7,278	428	10,135
Foreign Equity for VAT	7,284	21,834	1,285	30,404
Cash Equity for VAT	14,569	43,669	2,570	60,807

Equity Requirement	107,642
Equity for VAT	60,807
Total Equity	168,449

SIBERIAN GASS PROCESSING PLANT
Equity Returns

(Thousands)

	1994	1995	1996	1997	1998	1999	2000	2001	2002	2003	2004	2005	2006
EQUITY INVESTMENT													
SNGP Equity	-	7,348	16,931	3,797	-	-	-	-	-	-	-	-	-
PNG Equity	-	7,348	16,931	3,797	-	-	-	-	-	-	-	-	-
Gasprom Equity	-	7,348	16,931	3,797	-	-	-	-	-	-	-	-	-
Foreign Equity	-	22,044	50,792	11,390	-	-	-	-	-	-	-	-	-
Additional Equity	-	-	-	-	-	-	-	-	-	-	-	-	-
Total Equity	-	44,087	101,583	22,779	-	-	-	-	-	-	-	-	-
CUMULATIVE EQUITY INVESTMENT													
SNGP Equity Holdings	-	7,348	24,278	28,075	28,075	28,075	28,075	28,075	28,075	28,075	28,075	28,075	28,075
PNG Equity Holdings	-	7,348	24,278	28,075	28,075	28,075	28,075	28,075	28,075	28,075	28,075	28,075	28,075
Gasprom Equity Holdings	-	7,348	24,278	28,075	28,075	28,075	28,075	28,075	28,075	28,075	28,075	28,075	28,075
Foreign Equity Holdings	-	22,044	72,835	84,225	84,225	84,225	84,225	84,225	84,225	84,225	84,225	84,225	84,225
CS Equity Position	-	44,087	145,670	168,449	168,449	168,449	168,449	168,449	168,449	168,449	168,449	168,449	168,449
PROJECT RETURN ON EQUITY													
CS Dividends	-	-	-	-	8,979	75,358	66,931	62,066	66,673	69,936	68,382	59,036	88,130
Less: Equity Investment	-	44,087	101,583	22,779	-	-	-	-	-	-	-	-	-
Net Cash Flow	-	(44,087)	(101,583)	(22,779)	8,979	75,358	66,931	62,066	66,673	69,936	68,382	59,036	88,130
Cumulative	-	(44,087)	(145,670)	(168,449)	(159,471)	(84,113)	(17,182)	44,884	111,558	181,494	249,876	308,911	397,041
Real Net Cash Flow	-	(42,007)	(94,154)	(20,538)	7,875	64,293	55,549	49,530	51,160	51,600	48,512	40,271	57,806
Real Return on Equity	23.3%												

SIBERIAN GASS PROCESSING PLANT
Equity Returns

(Thousands)

	1994	1995	1996	1997	1998	1999	2000	2001	2002	2003	2004	2005	2006
SNGP RETURNS													
SNGP Share of Common Stock		17%	17%	17%	17%	17%	17%	17%	17%	17%	17%	17%	17%
CS Dividends	-	-	-	-	8,979	75,358	66,931	62,066	66,673	69,936	68,382	59,036	88,130
SNGP CS Dividends		-	-	-	1,496	12,560	11,155	10,344	11,112	11,656	11,397	9,839	14,688
SNGP CS Dividends		-	-	-	1,496	12,560	11,155	10,344	11,112	11,656	11,397	9,839	14,688
Plus: SNGP NGL Pipeline Marginal Profit	-	-	-	-	-	-	-	-	-	-	-	-	-
Less: SNGP Equity	-	7,348	16,931	3,797	-	-	-	-	-	-	-	-	-
SNGP Net Cash Flow	-	(7,348)	(16,931)	(3,797)	1,496	12,560	11,155	10,344	11,112	11,656	11,397	9,839	14,688
Real SNGP Net Cash Flow	-	(7,001)	(15,692)	(3,423)	1,312	10,716	9,258	8,255	8,527	8,600	8,085	6,712	9,634
SNGP Real Return on Equity	23.3%												
PNG RETURNS													
PNG Share of Common Stock		17%	17%	17%	17%	17%	17%	17%	17%	17%	17%	17%	17%
CS Dividends	-	-	-	-	8,979	75,358	66,931	62,066	66,673	69,936	68,382	59,036	88,130
PNG CS Dividends		-	-	-	1,496	12,560	11,155	10,344	11,112	11,656	11,397	9,839	14,688
PNG CS Dividends		-	-	-	1,496	12,560	11,155	10,344	11,112	11,656	11,397	9,839	14,688
Plus: PNG Wet Gas Marginal Profit	-	-	-	-	-	-	-	-	-	-	-	-	-
Less: PNG Equity	-	7,348	16,931	3,797	-	-	-	-	-	-	-	-	-
PNG Net Cash Flow	-	(7,348)	(16,931)	(3,797)	1,496	12,560	11,155	10,344	11,112	11,656	11,397	9,839	14,688
Real PNG Net Cash Flow	-	(7,001)	(15,692)	(3,423)	1,312	10,716	9,258	8,255	8,527	8,600	8,085	6,712	9,634
PNG Real Return on Equity	23.3%												
GASPROM RETURNS													
Gasprom Share of Common Stock		17%	17%	17%	17%	17%	17%	17%	17%	17%	17%	17%	17%
CS Dividends	-	-	-	-	8,979	75,358	66,931	62,066	66,673	69,936	68,382	59,036	88,130
Gasprom CS Dividends		-	-	-	1,496	12,560	11,155	10,344	11,112	11,656	11,397	9,839	14,688
Gasprom CS Dividends		-	-	-	1,496	12,560	11,155	10,344	11,112	11,656	11,397	9,839	14,688
Plus: Gasprom Transport Marginal Profit	-	-	-	-	-	-	-	-	-	-	-	-	-
Less: Gasprom Equity	-	7,348	16,931	3,797	-	-	-	-	-	-	-	-	-
Gasprom Net Cash Flow	-	(7,348)	(16,931)	(3,797)	1,496	12,560	11,155	10,344	11,112	11,656	11,397	9,839	14,688
Real Gasprom Net Cash Flow	-	(7,001)	(15,692)	(3,423)	1,312	10,716	9,258	8,255	8,527	8,600	8,085	6,712	9,634
Gasprom Real Return on Equity	23.3%												
FOREIGN INVESTOR RETURNS													
Foreign Share of Common Stock		50%	50%	50%	50%	50%	50%	50%	50%	50%	50%	50%	50%
CS Dividends	-	-	-	-	8,979	75,358	66,931	62,066	66,673	69,936	68,382	59,036	88,130
Foreign CS Dividends		-	-	-	4,489	37,679	33,466	31,033	33,337	34,968	34,191	29,518	44,065
Foreign CS Dividends		-	-	-	4,489	37,679	33,466	31,033	33,337	34,968	34,191	29,518	44,065
Less: Foreign Equity	-	22,044	50,792	11,390	-	-	-	-	-	-	-	-	-
Less: Additional Equity Investment	-	-	-	-	-	-	-	-	-	-	-	-	-
Foreign Net Cash Flow	-	(22,044)	(50,792)	(11,390)	4,489	37,679	33,466	31,033	33,337	34,968	34,191	29,518	44,065
Real Foreign Cash Flow	-	(21,004)	(47,077)	(10,269)	3,937	32,147	27,774	24,765	25,580	25,800	24,256	20,136	28,903
Foreign Real Return on Equity	23.3%												

SIBERIAN GASS PROCESSING PLANT
Equity Returns

(Thousands)

	2007	2008	2009	2010	2011	2012	2013	2014	2015	Total
EQUITY INVESTMENT										
SNGP Equity	-	-	-	-	-	-	-	-	-	28,075
PNG Equity	-	-	-	-	-	-	-	-	-	28,075
Gasprom Equity	-	-	-	-	-	-	-	-	-	28,075
Foreign Equity	-	-	-	-	-	-	-	-	-	84,225
Additional Equity	-	-	-	-	-	-	-	-	-	-
Total Equity	-	-	-	-	-	-	-	-	-	168,449
CUMULATIVE EQUITY INVESTMENT										
SNGP Equity Holdings	28,075	28,075	28,075	28,075	28,075	28,075	28,075	28,075	28,075	
PNG Equity Holdings	28,075	28,075	28,075	28,075	28,075	28,075	28,075	28,075	28,075	
Gasprom Equity Holdings	28,075	28,075	28,075	28,075	28,075	28,075	28,075	28,075	28,075	
Foreign Equity Holdings	84,225	84,225	84,225	84,225	84,225	84,225	84,225	84,225	84,225	
CS Equity Position	168,449	168,449	168,449	168,449	168,449	168,449	168,449	168,449	168,449	
PROJECT RETURN ON EQUITY										
CS Dividends	115,552	120,174	124,981	129,980	135,179	140,587	146,210	152,058	187,014	1,817,226
Less: Equity Investment	-	-	-	-	-	-	-	-	-	168,449
Net Cash Flow	115,552	120,174	124,981	129,980	135,179	140,587	146,210	152,058	187,014	1,648,776
Cumulative	512,593	632,767	757,748	887,728	1,022,908	1,163,494	1,309,704	1,461,763	1,648,776	
Real Net Cash Flow	72,877	72,877	72,877	72,877	72,877	72,877	72,877	72,877	86,183	939,095
Real Return on Equity										

SIBERIAN GASS PROCESSING PLANT
Equity Returns

(Thousands)

	2007	2008	2009	2010	2011	2012	2013	2014	2015	Total
SNGP RETURNS										
SNGP Share of Common Stock	17%	17%	17%	17%	17%	17%	17%	17%	17%	
CS Dividends	115,552	120,174	124,981	129,980	135,179	140,587	146,210	152,058	187,014	1,817,226
SNGP CS Dividends	19,259	20,029	20,830	21,663	22,530	23,431	24,368	25,343	31,169	302,871
SNGP CS Dividends	19,259	20,029	20,830	21,663	22,530	23,431	24,368	25,343	31,169	302,871
Plus: SNGP NGL Pipeline Marginal Profit	-	-	-	-	-	-	-	-	-	-
Less: SNGP Equity	-	-	-	-	-	-	-	-	-	28,075
SNGP Net Cash Flow	19,259	20,029	20,830	21,663	22,530	23,431	24,368	25,343	31,169	274,796
Real SNGP Net Cash Flow	12,146	12,146	12,146	12,146	12,146	12,146	12,146	12,146	14,364	156,516
SNGP Real Return on Equity										
PNG RETURNS										
PNG Share of Common Stock	17%	17%	17%	17%	17%	17%	17%	17%	17%	
CS Dividends	115,552	120,174	124,981	129,980	135,179	140,587	146,210	152,058	187,014	1,817,226
PNG CS Dividends	19,259	20,029	20,830	21,663	22,530	23,431	24,368	25,343	31,169	302,871
PNG CS Dividends	19,259	20,029	20,830	21,663	22,530	23,431	24,368	25,343	31,169	302,871
Plus: PNG Wet Gas Marginal Profit	-	-	-	-	-	-	-	-	-	-
Less: PNG Equity	-	-	-	-	-	-	-	-	-	28,075
PNG Net Cash Flow	19,259	20,029	20,830	21,663	22,530	23,431	24,368	25,343	31,169	274,796
Real PNG Net Cash Flow	12,146	12,146	12,146	12,146	12,146	12,146	12,146	12,146	14,364	156,516
PNG Real Return on Equity										
GASPROM RETURNS										
Gasprom Share of Common Stock	17%	17%	17%	17%	17%	17%	17%	17%	17%	
CS Dividends	115,552	120,174	124,981	129,980	135,179	140,587	146,210	152,058	187,014	1,817,226
Gasprom CS Dividends	19,259	20,029	20,830	21,663	22,530	23,431	24,368	25,343	31,169	302,871
Gasprom CS Dividends	19,259	20,029	20,830	21,663	22,530	23,431	24,368	25,343	31,169	302,871
Plus: Gasprom Transport Marginal Profit	-	-	-	-	-	-	-	-	-	-
Less: Gasprom Equity	-	-	-	-	-	-	-	-	-	28,075
Gasprom Net Cash Flow	19,259	20,029	20,830	21,663	22,530	23,431	24,368	25,343	31,169	274,796
Real Gasprom Net Cash Flow	12,146	12,146	12,146	12,146	12,146	12,146	12,146	12,146	14,364	156,516
Gasprom Real Return on Equity										
FOREIGN INVESTOR RETURNS										
Foreign Share of Common Stock	50%	50%	50%	50%	50%	50%	50%	50%	50%	
CS Dividends	115,552	120,174	124,981	129,980	135,179	140,587	146,210	152,058	187,014	1,817,226
Foreign CS Dividends	57,776	60,087	62,490	64,990	67,590	70,293	73,105	76,029	93,507	908,613
Foreign CS Dividends	57,776	60,087	62,490	64,990	67,590	70,293	73,105	76,029	93,507	908,613
Less: Foreign Equity	-	-	-	-	-	-	-	-	-	84,225
Less: Additional Equity Investment	-	-	-	-	-	-	-	-	-	-
Foreign Net Cash Flow	57,776	60,087	62,490	64,990	67,590	70,293	73,105	76,029	93,507	824,388
Real Foreign Cash Flow	36,438	36,438	36,438	36,438	36,438	36,438	36,438	36,438	43,091	469,548
Foreign Real Return on Equity										

SIBERIAN GAS PROCESSING PLANT
Data and Key Results

TIMING DATA

Cost Estimate Month	Oct 93	First, Last Operation Month	Jan 96 Dec 15
Financial Closing Month	Jan 95	Economic Life	20.00

ENGINEERING DATA

	1994	1995	1996	1997	1998	1999	2000	2001
Rated Capacity (BCM/yr)in 1996, 1998	2.14	4.28						
Stream Factor		-	100%	100%	100%	100%	100%	100%
Operations Partial Year Factor	-	-	1.000	1.000	1.000	100%	100%	100%
Wet Gas Processed (MCM)	-	-	2.14	2.14	4.28	4.28	4.28	4.28
Dry Gas Production (BCM)	-	-	1.80	1.91	3.76	3.76	3.76	3.76
NGL Production (MMTons)	-	-	0.36	0.49	1.07	1.07	1.07	1.07

REVENUE DATA (1996 $'s)

NGL Domestic Price ($/Ton)	50.89	Domestic Gas Price ($/MCM)	17.09
NGL Export Price ($/Ton)	108.00	Export Gas Price ($/MCM)	90.00
% NGL for Export	100%	% Dry Gas for Export	-

OPERATING COST DATA (1993 $000's)

Wet Gas Feedstock Cost ($/MCM)	-	
Chemicals Cost	382	
Utility Cost	19,432	
Maintenance Cost	985	
Labor Cost, Benefits	1,364	518
Other Expenses	10,134	

TRANSPORT COSTS (1996 $'s)

	DOM	EXP
Dry Gas In-Russia Costs ($/MCM)	-	40.00
Dry Gas Export Costs		32.00
NGL In-Russia Costs ($/Ton)	1.94	36.55
NGL Pipeline Costs	43.52	43.52
NGL Port Loading Charge		1.62
NGL Shipping Cost		15.10

CAPITAL COST DATA (1993 $000's)

	1995	1996	1997	Total
Gubkinsky GPP Expansion	43,700	157,500	90,300	291,500
Tarasovsky Gas Processing Plant	-	-	-	-
Gas Gathering Systems Cost	17,900	53,700	40,200	111,800
Metering Facilities Cost	440	1,290	970	2,700
Contributed Assets	9,842	24,569	15,326	49,737
Other Owners Costs	8,000	-	-	8,000
Infrastructure Costs	9,306	31,874	19,721	60,900
Initial Working Capital	2,839	-	-	2,839
Capital Costs	92,027	268,932	166,517	527,476

WORKING CAPITAL DATA

Days Receivables	45
Days Payables	45

FINANCING DATA

	WB/Other Loan	
% of Permanent Financing	70%	
Loan Amount, Commitment	425,256	425,256
Loan Interest Rate	8.15%	
Start of Repayment, Repayment Period	Jan 98	9.0
Commitment Fees %	0.25%	
Upfront Fee %	-	
Other Fin Fees & Close Costs (%, Amt)	-	

KEY RESULTS SUMMARY

Real Return on Investment (no taxes)	4.4%
Unleveraged Payback (Yrs)	9.6
Nominal NPV (Oct '93) @ 15.0%	(124900)
Real Return on Equity	(1.4%)
Leveraged Payback (Yrs)	16.0
Nominal NPV (Oct '93) @ 15.0%	(137715)
Min Debt Service Coverage	64%
Average Debt Service Coverage	81%

FINANCING DATA (cont'd)

	Actual
Required Reserves (1st Operating Yr)	39,748
Cash Flow Dedicated to Reserves	100%
Reinvestment Rate	3.0%

TAX DATA

Tax & Book In Service Month	Jan 96
Profits Tax	32.00%
15% Yr SL Property %	100.0%
Carryforward Years	5
VAT Tax (% of CapEx)	20.0%
Property Tax (% of Fixed Assets)	-
Road Tax (% of Revenues)	0.4%
Dry Gas Export Tariff ('93 $/MCM)	-
NGL Export Tariff ('93 $/Ton)	-

ECONOMIC DATA

Global Inflation Rate	2.8% **
Capital Cost Esc Rate	2.8%
O&M Esc Rate	2.8%
Export Gas Price Esc Rate	2.8%
Domestic Gas Price Esc Rate	2.8%
Export NGL Price Esc Rate	2.8%
Domestic NGL Price Esc Rate	2.8%

** Until 2000, 4% thereafter
(all escalation equivalent to inflation)

SENSITIVITY ANALYSIS FACTORS

O&M Cost	1.00
Gas Price	1.00
NGL Price	0.75
Capital Cost	1.00
Transport Cost	1.00
Wet Gas Price	1.00

015

SIBERIAN GAS PROCESSING PLANT
Annual Sources and Uses of Funds During Construction

($US Thousands)

	1995	1996	1997	Total	%
SOURCES OF FUNDS					
World Bank/Other Loan	68,896	209,432	146,928	425,256	70%
SIBNG Cash Equity	-	-	-	-	-
PNG Cash Equity	-	-	-	-	-
Gasprom Cash Equity	4,921	12,284	7,663	24,869	4%
SIBNG Equity	4,921	12,284	7,663	24,869	4%
PNG Equity	4,921	12,284	7,663	24,869	4%
Foreign Equity	14,763	36,853	22,990	74,606	12%
JV Operating Cash Flow	-	16,050	16,990	33,040	5%
Total Sources of Funds	98,423	299,188	209,898	607,508	100%
USES OF FUNDS					
Gubkinsky GPP Expansion	45,950	169,606	99,266	314,821	
Tarasovsky Gas Processing Plant	-	-	-	-	
Gas Gathering Systems Cost	18,820	57,765	44,281	120,866	
Metering Facilities Costs	463	1,388	1,068	2,919	
Infrastructure Costs	9,785	34,314	21,692	65,791	
Contributed Assets	9,842	24,569	15,326	49,737	
Other Owners Costs	8,281	-	-	8,281	
Initial Working Capital	3,000	-	-	3,000	
Capital Costs	96,140	287,640	181,634	565,415	93%
Other Loan Interest	1,260	10,827	28,088	40,176	
Other Loan Commitment Fees	1,022	720	175	1,918	
Upfront Fees	-	-	-	-	
Financing Costs	2,283	11,548	28,263	42,094	7%
Total Uses of Funds	98,423	299,188	209,898	607,508	100%

	$	%
Total Debt	425,256	70%
Operating Cash	33,040	5%
Equity Requirement	149,212	25%
	607,508	100%

MEMORANDA	WB/Other Loan	
Loan Draws, Amount	425,256	
Standby Facility	-	
Constr Loan Draws + Standby, Commitment	425,256	425,256
Constr Loan Int Rate	8.15%	
Commitment Fee Rate	0.25%	
Upfront Fee Rate	-	
Other Financing Fees (%, Amt)	-	
Repayment Period	9.0	

** NOTE: ANNUAL SANDU STATEMENT IS FOR PRESENTATION ONLY. VALUES ARE FROM QUARTERLY CALCULATIONS.

VAT TAX FUNDING				
VAT Tax	15,003	52,614	33,262	100,879
VAT Recovery Expressed in $'s	435	8,945	30,692	40,072
Net VAT Payment	14,569	43,669	2,570	60,807
PNG Cash Equity for VAT	2,428	7,278	428	10,135
SNGP Cash Equity for VAT	2,428	7,278	428	10,135
Gasprom Cash Equity for VAT	2,428	7,278	428	10,135
Foreign Equity for VAT	7,284	21,834	1,285	30,404
Cash Equity for VAT	14,569	43,669	2,570	60,807

Equity Requirement	149,212
Equity for VAT	60,807
Total Equity	210,020

SIBERIAN GASS PROCESSING PLANT
Equity Returns

(Thousands)

	1994	1995	1996	1997	1998	1999	2000	2001	2002	2003	2004	2005	2006
EQUITY INVESTMENT													
SNGP Equity	-	7,349	19,563	8,091	-	-	-	-	-	-	-	-	-
PNG Equity	-	7,349	19,563	8,091	-	-	-	-	-	-	-	-	-
Gasprom Equity	-	7,349	19,563	8,091	-	-	-	-	-	-	-	-	-
Foreign Equity	-	22,048	58,688	24,274	-	-	-	-	-	-	-	-	-
Additional Equity	-	-	-	-	28,305	10,329	16,782	21,965	16,374	10,709	4,967	6,882	1,923
Total Equity	-	44,096	117,375	48,549	28,305	10,329	16,782	21,965	16,374	10,709	4,967	6,882	1,923
CUMULATIVE EQUITY INVESTMENT													
SNGP Equity Holdings	-	7,349	26,912	35,003	35,003	35,003	35,003	35,003	35,003	35,003	35,003	35,003	35,003
PNG Equity Holdings	-	7,349	26,912	35,003	35,003	35,003	35,003	35,003	35,003	35,003	35,003	35,003	35,003
Gasprom Equity Holdings	-	7,349	26,912	35,003	35,003	35,003	35,003	35,003	35,003	35,003	35,003	35,003	35,003
Foreign Equity Holdings	-	22,048	80,735	105,010	133,315	143,645	160,426	182,392	198,766	209,475	214,441	221,324	223,247
CS Equity Position	-	44,096	161,471	210,020	238,325	248,654	265,436	287,401	303,775	314,484	319,451	326,333	328,257
PROJECT RETURN ON EQUITY													
CS Dividends	-	-	-	-	-	-	-	-	-	-	-	-	-
Less: Equity Investment	-	44,096	117,375	48,549	28,305	10,329	16,782	21,965	16,374	10,709	4,967	6,882	1,923
Net Cash Flow	-	(44,096)	(117,375)	(48,549)	(28,305)	(10,329)	(16,782)	(21,965)	(16,374)	(10,709)	(4,967)	(6,882)	(1,923)
Cumulative	-	(44,096)	(161,471)	(210,020)	(238,325)	(248,654)	(265,436)	(287,401)	(303,775)	(314,484)	(319,451)	(326,333)	(328,257)
Real Net Cash Flow	-	(42,015)	(108,791)	(43,773)	(24,826)	(8,813)	(13,928)	(17,529)	(12,564)	(7,901)	(3,523)	(4,695)	(1,261)
Real Return on Equity	(1.4%)												

SIBERIAN GASS PROCESSING PLANT
Equity Returns
(Thousands)

	1994	1995	1996	1997	1998	1999	2000	2001	2002	2003	2004	2005	2006
SNGP RETURNS													
SNGP Share of Common Stock		17%	17%	17%	15%	14%	13%	12%	12%	11%	11%	11%	11%
CS Dividends	-	-	-	-	-	-	-	-	-	-	-	-	-
SNGP CS Dividends		-	-	-	-	-	-	-	-	-	-	-	-
SNGP CS Dividends		-	-	-	-	-	-	-	-	-	-	-	-
Plus: SNGP NGL Pipeline Marginal Profit	-	-	-	-	-	-	-	-	-	-	-	-	-
Less: SNGP Equity	-	7,349	19,563	8,091	-	-	-	-	-	-	-	-	-
SNGP Net Cash Flow	-	(7,349)	(19,563)	(8,091)	-	-	-	-	-	-	-	-	-
Real SNGP Net Cash Flow	-	(7,003)	(18,132)	(7,295)	-	-	-	-	-	-	-	-	-
SNGP Real Return on Equity	#ARITH												
PNG RETURNS													
PNG Share of Common Stock		17%	17%	17%	15%	14%	13%	12%	12%	11%	11%	11%	11%
CS Dividends	-	-	-	-	-	-	-	-	-	-	-	-	-
PNG CS Dividends		-	-	-	-	-	-	-	-	-	-	-	-
PNG CS Dividends		-	-	-	-	-	-	-	-	-	-	-	-
Plus: PNG Wet Gas Marginal Profit	-	-	-	-	-	-	-	-	-	-	-	-	-
Less: PNG Equity	-	7,349	19,563	8,091	-	-	-	-	-	-	-	-	-
PNG Net Cash Flow	-	(7,349)	(19,563)	(8,091)	-	-	-	-	-	-	-	-	-
Real PNG Net Cash Flow	-	(7,003)	(18,132)	(7,295)	-	-	-	-	-	-	-	-	-
PNG Real Return on Equity	(1.6%)												
GASPROM RETURNS													
Gasprom Share of Common Stock		17%	17%	17%	15%	14%	13%	12%	12%	11%	11%	11%	11%
CS Dividends	-	-	-	-	-	-	-	-	-	-	-	-	-
Gasprom CS Dividends		-	-	-	-	-	-	-	-	-	-	-	-
Gasprom CS Dividends		-	-	-	-	-	-	-	-	-	-	-	-
Plus: Gasprom Transport Marginal Profit	-	-	-	-	-	-	-	-	-	-	-	-	-
Less: Gasprom Equity	-	7,349	19,563	8,091	-	-	-	-	-	-	-	-	-
Gasprom Net Cash Flow	-	(7,349)	(19,563)	(8,091)	-	-	-	-	-	-	-	-	-
Real Gasprom Net Cash Flow	-	(7,003)	(18,132)	(7,295)	-	-	-	-	-	-	-	-	-
Gasprom Real Return on Equity	#ARITH												
FOREIGN INVESTOR RETURNS													
Foreign Share of Common Stock		50%	50%	50%	56%	58%	60%	63%	65%	67%	67%	68%	68%
CS Dividends	-	-	-	-	-	-	-	-	-	-	-	-	-
Foreign CS Dividends		-	-	-	-	-	-	-	-	-	-	-	-
Foreign CS Dividends		-	-	-	-	-	-	-	-	-	-	-	-
Less: Foreign Equity	-	22,048	58,688	24,274	-	-	-	-	-	-	-	-	-
Less: Additional Equity Investment	-	-	-	-	28,305	10,329	16,782	21,965	16,374	10,709	4,967	6,882	1,923
Foreign Net Cash Flow	-	(22,048)	(58,688)	(24,274)	(28,305)	(10,329)	(16,782)	(21,965)	(16,374)	(10,709)	(4,967)	(6,882)	(1,923)
Real Foreign Cash Flow	-	(21,008)	(54,396)	(21,886)	(24,826)	(8,813)	(13,928)	(17,529)	(12,564)	(7,901)	(3,523)	(4,695)	(1,261)
Foreign Real Return on Equity	(1.3%)												

SIBERIAN GASS PROCESSING PLANT
Equity Returns
(Thousands)

	2007	2008	2009	2010	2011	2012	2013	2014	2015	Total
EQUITY INVESTMENT										
SNGP Equity	-	-	-	-	-	-	-	-	-	35,003
PNG Equity	-	-	-	-	-	-	-	-	-	35,003
Gasprom Equity	-	-	-	-	-	-	-	-	-	35,003
Foreign Equity	-	-	-	-	-	-	-	-	-	105,010
Additional Equity	-	-	-	-	-	-	-	-	-	118,237
Total Equity	-	-	-	-	-	-	-	-	-	328,257
CUMULATIVE EQUITY INVESTMENT										
SNGP Equity Holdings	35,003	35,003	35,003	35,003	35,003	35,003	35,003	35,003	35,003	
PNG Equity Holdings	35,003	35,003	35,003	35,003	35,003	35,003	35,003	35,003	35,003	
Gasprom Equity Holdings	35,003	35,003	35,003	35,003	35,003	35,003	35,003	35,003	35,003	
Foreign Equity Holdings	223,247	223,247	223,247	223,247	223,247	223,247	223,247	223,247	223,247	
CS Equity Position	328,257	328,257	328,257	328,257	328,257	328,257	328,257	328,257	328,257	
PROJECT RETURN ON EQUITY										
CS Dividends	49,182	48,608	43,005	44,725	46,514	48,375	50,310	52,322	64,350	447,392
Less: Equity Investment	-	-	-	-	-	-	-	-	-	328,257
Net Cash Flow	49,182	48,608	43,005	44,725	46,514	48,375	50,310	52,322	64,350	119,135
Cumulative	(279,075)	(230,467)	(187,462)	(142,736)	(96,222)	(47,847)	2,463	54,785	119,135	
Real Net Cash Flow	31,018	29,477	25,076	25,076	25,076	25,076	25,076	25,076	29,655	(49,011)
Real Return on Equity										

SIBERIAN GASS PROCESSING PLANT
Equity Returns
(Thousands)

	2007	2008	2009	2010	2011	2012	2013	2014	2015	Total
SNGP RETURNS										
SNGP Share of Common Stock	11%	11%	11%	11%	11%	11%	11%	11%	11%	
CS Dividends	49,182	48,608	43,005	44,725	46,514	48,375	50,310	52,322	64,350	447,392
SNGP CS Dividends	5,244	5,183	4,586	4,769	4,960	5,158	5,365	5,579	6,862	47,707
SNGP CS Dividends	5,244	5,183	4,586	4,769	4,960	5,158	5,365	5,579	6,862	47,707
Plus: SNGP NGL Pipeline Marginal Profit	-	-	-	-	-	-	-	-	-	-
Less: SNGP Equity	-	-	-	-	-	-	-	-	-	35,003
SNGP Net Cash Flow	5,244	5,183	4,586	4,769	4,960	5,158	5,365	5,579	6,862	12,704
Real SNGP Net Cash Flow	3,308	3,143	2,674	2,674	2,674	2,674	2,674	2,674	3,162	(6,773)
SNGP Real Return on Equity										
PNG RETURNS										
PNG Share of Common Stock	11%	11%	11%	11%	11%	11%	11%	11%	11%	
CS Dividends	49,182	48,608	43,005	44,725	46,514	48,375	50,310	52,322	64,350	447,392
PNG CS Dividends	5,244	5,183	4,586	4,769	4,960	5,158	5,365	5,579	6,862	47,707
PNG CS Dividends	5,244	5,183	4,586	4,769	4,960	5,158	5,365	5,579	6,862	47,707
Plus: PNG Wet Gas Marginal Profit	-	-	-	-	-	-	-	-	-	-
Less: PNG Equity	-	-	-	-	-	-	-	-	-	35,003
PNG Net Cash Flow	5,244	5,183	4,586	4,769	4,960	5,158	5,365	5,579	6,862	12,704
Real PNG Net Cash Flow	3,308	3,143	2,674	2,674	2,674	2,674	2,674	2,674	3,162	(6,773)
PNG Real Return on Equity										
GASPROM RETURNS										
Gasprom Share of Common Stock	11%	11%	11%	11%	11%	11%	11%	11%	11%	
CS Dividends	49,182	48,608	43,005	44,725	46,514	48,375	50,310	52,322	64,350	447,392
Gasprom CS Dividends	5,244	5,183	4,586	4,769	4,960	5,158	5,365	5,579	6,862	47,707
Gasprom CS Dividends	5,244	5,183	4,586	4,769	4,960	5,158	5,365	5,579	6,862	47,707
Plus: Gasprom Transport Marginal Profit	-	-	-	-	-	-	-	-	-	-
Less: Gasprom Equity	-	-	-	-	-	-	-	-	-	35,003
Gasprom Net Cash Flow	5,244	5,183	4,586	4,769	4,960	5,158	5,365	5,579	6,862	12,704
Real Gasprom Net Cash Flow	3,308	3,143	2,674	2,674	2,674	2,674	2,674	2,674	3,162	(6,773)
Gasprom Real Return on Equity										
FOREIGN INVESTOR RETURNS										
Foreign Share of Common Stock	68%	68%	68%	68%	68%	68%	68%	68%	68%	
CS Dividends	49,182	48,608	43,005	44,725	46,514	48,375	50,310	52,322	64,350	447,392
Foreign CS Dividends	33,448	33,058	29,248	30,418	31,634	32,900	34,216	35,584	43,764	304,270
Foreign CS Dividends	33,448	33,058	29,248	30,418	31,634	32,900	34,216	35,584	43,764	304,270
Less: Foreign Equity	-	-	-	-	-	-	-	-	-	105,010
Less: Additional Equity Investment	-	-	-	-	-	-	-	-	-	118,237
Foreign Net Cash Flow	33,448	33,058	29,248	30,418	31,634	32,900	34,216	35,584	43,764	81,024
Real Foreign Cash Flow	21,095	20,048	17,054	17,054	17,054	17,054	17,054	17,054	20,168	(28,692)
Foreign Real Return on Equity										

SIBERIAN GAS PROCESSING PLANT
Data and Key Results

TIMING DATA

Cost Estimate Month	Oct 93	First, Last Operation Month	Jan 96	Dec 15
Financial Closing Month	Jan 95	Economic Life	20.00	

ENGINEERING DATA

	1994	1995	1996	1997	1998	1999	2000	2001
Rated Capacity (BCM/yr)in 1996, 1998	2.14	4.28						
Stream Factor		-	100%	100%	100%	100%	100%	100%
Operations Partial Year Factor	-	-	1.000	1.000	1.000	100%	100%	100%
Wet Gas Processed (MCM)	-	-	2.14	2.14	4.28	4.28	4.28	4.28
Dry Gas Production (BCM)	-	-	1.80	1.91	3.76	3.76	3.76	3.76
NGL Production (MMTons)	-	-	0.36	0.49	1.07	1.07	1.07	1.07

REVENUE DATA (1996 $'s)

NGL Domestic Price ($/Ton)	67.86	Domestic Gas Price ($/MCM)	17.09
NGL Export Price ($/Ton)	144.00	Export Gas Price ($/MCM)	90.00
% NGL for Export	-	% Dry Gas for Export	-

OPERATING COST DATA (1993 $000's)

Wet Gas Feedstock Cost ($/MCM)	-	
Chemicals Cost	382	
Utility Cost	19,432	
Maintenance Cost	985	
Labor Cost, Benefits	1,364	518
Other Expenses	10,134	

TRANSPORT COSTS (1996 $'s)

	DOM	EXP
Dry Gas In-Russia Costs ($/MCM)	-	40.00
Dry Gas Export Costs		32.00
NGL In-Russia Costs ($/Ton)	1.94	36.55
NGL Pipeline Costs	43.52	43.52
NGL Port Loading Charge		1.62
NGL Shipping Cost		15.10

CAPITAL COST DATA (1993 $000's)

	1995	1996	1997	Total
Gubkinsky GPP Expansion	43,700	157,500	90,300	291,500
Tarasovsky Gas Processing Plant	-	-	-	-
Gas Gathering Systems Cost	17,900	53,700	40,200	111,800
Metering Facilities Cost	440	1,290	970	2,700
Contributed Assets	9,842	23,736	13,967	47,544
Other Owners Costs	8,000	-	-	8,000
Infrastructure Costs	9,306	31,874	19,721	60,900
Initial Working Capital	2,839	-	-	2,839
Capital Costs	92,027	268,099	165,157	525,283

WORKING CAPITAL DATA

Days Receivables	45
Days Payables	45

FINANCING DATA

	WB/Other Loan	
% of Permanent Financing	70%	
Loan Amount, Commitment	423,648	423,650
Loan Interest Rate	8.15%	
Start of Repayment, Repayment Period	Jan 98	9.0
Commitment Fees %	0.25%	
Upfront Fee %	-	
Other Fin Fees & Close Costs (%, Amt)	-	

KEY RESULTS SUMMARY

Real Return on Investment (no taxes)	7.7%
Unleveraged Payback (Yrs)	7.6
Nominal NPV (Oct '93) @ 15.0%	(68,364)
Real Return on Equity	3.3%
Leveraged Payback (Yrs)	12.3
Nominal NPV (Oct '93) @ 15.0%	(88,403)
Min Debt Service Coverage	80%
Average Debt Service Coverage	103%

FINANCING DATA (cont'd)

	Actual
Required Reserves (1st Operating Yr)	39,597
Cash Flow Dedicated to Reserves	100%
Reinvestment Rate	3.0%

TAX DATA

Tax & Book In Service Month	Jan 96
Profits Tax	32.00%
15% Yr SL Property %	100.0%
Carryforward Years	5
VAT Tax (% of CapEx)	20.0%
Property Tax (% of Fixed Assets)	-
Road Tax (% of Revenues)	0.4%
Dry Gas Export Tariff ('93 $/MCM)	-
NGL Export Tariff ('93 $/Ton)	-

ECONOMIC DATA

Global Inflation Rate	2.8% **
Capital Cost Esc Rate	2.8%
O&M Esc Rate	2.8%
Export Gas Price Esc Rate	2.8%
Domestic Gas Price Esc Rate	2.8%
Export NGL Price Esc Rate	2.8%
Domestic NGL Price Esc Rate	2.8%

** Until 2000, 4% thereafter
(all escalation equivalent to inflation)

SENSITIVITY ANALYSIS FACTORS

O&M Cost	1.00
Gas Price	1.00
NGL Price	1.00
Capital Cost	1.00
Transport Cost	1.00
Wet Gas Price	1.00

081

1291

SIBERIAN GAS PROCESSING PLANT
Annual Sources and Uses of Funds During Construction

($US Thousands)

	1995	1996	1997	Total	%
SOURCES OF FUNDS					
World Bank/Other Loan	68,893	208,834	145,922	423,648	70%
SIBNG Cash Equity	-	-	-	-	-
PNG Cash Equity	-	-	-	-	-
Gasprom Cash Equity	4,921	11,868	6,983	23,772	4%
SIBNG Equity	4,921	11,868	6,983	23,772	4%
PNG Equity	4,921	11,868	6,983	23,772	4%
Foreign Equity	14,763	35,603	20,950	71,316	12%
JV Operating Cash Flow	-	18,293	20,637	38,931	6%
Total Sources of Funds	98,418	298,334	208,459	605,211	100%
USES OF FUNDS					
Gubkinsky GPP Expansion	45,950	169,606	99,266	314,821	
Tarasovsky Gas Processing Plant	-	-	-	-	
Gas Gathering Systems Cost	18,820	57,765	44,281	120,866	
Metering Facilities Costs	463	1,388	1,068	2,919	
Infrastructure Costs	9,785	34,314	21,692	65,791	
Contributed Assets	9,842	23,736	13,967	47,544	
Other Owners Costs	8,281	-	-	8,281	
Initial Working Capital	3,000	-	-	3,000	
Capital Costs	96,140	286,807	180,275	563,222	93%
Other Loan Interest	1,260	10,810	28,011	40,081	
Other Loan Commitment Fees	1,018	717	174	1,909	
Upfront Fees	-	-	-	-	
Financing Costs	2,279	11,527	28,185	41,990	7%
Total Uses of Funds	98,418	298,334	208,459	605,211	100%

	$	%
Total Debt	423,648	70%
Operating Cash	38,931	6%
Equity Requirement	142,633	24%
	605,211	100%

MEMORANDA	WB/Other Loan	
Loan Draws, Amount	423,648	
Standby Facility	-	
Constr Loan Draws + Standby, Commitment	423,648	423,650
Constr Loan Int Rate	8.15%	
Commitment Fee Rate	0.25%	
Upfront Fee Rate	-	
Other Financing Fees (%, Amt)	-	
Repayment Period	9.0	

** NOTE: ANNUAL SANDU STATEMENT IS FOR PRESENTATION ONLY. VALUES ARE FROM QUARTERLY CALCULATIONS.

VAT TAX FUNDING				
VAT Tax	15,003	52,614	33,262	100,879
VAT Recovery Expressed in $'s	435	8,945	30,692	40,072
Net VAT Payment	14,569	43,669	2,570	60,807
PNG Cash Equity for VAT	2,428	7,278	428	10,135
SNGP Cash Equity for VAT	2,428	7,278	428	10,135
Gasprom Cash Equity for VAT	2,428	7,278	428	10,135
Foreign Equity for VAT	7,284	21,834	1,285	30,404
Cash Equity for VAT	14,569	43,669	2,570	60,807

Equity Requirement	142,633
Equity for VAT	60,807
Total Equity	203,440

082

SIBERIAN GASS PROCESSING PLANT
Equity Returns

(Thousands)

	1994	1995	1996	1997	1998	1999	2000	2001	2002	2003	2004	2005	2006
EQUITY INVESTMENT													
SNGP Equity	-	7,349	19,146	7,412	-	-	-	-	-	-	-	-	-
PNG Equity	-	7,349	19,146	7,412	-	-	-	-	-	-	-	-	-
Gasprom Equity	-	7,349	19,146	7,412	-	-	-	-	-	-	-	-	-
Foreign Equity	-	22,047	57,438	22,235	-	-	-	-	-	-	-	-	-
Additional Equity	-	-	-	-	16,108	-	-	7,649	1,598	-	-	-	-
Total Equity	-	44,094	114,876	44,470	16,108	-	-	7,649	1,598	-	-	-	-
CUMULATIVE EQUITY INVESTMENT													
SNGP Equity Holdings	-	7,349	26,495	33,907	33,907	33,907	33,907	33,907	33,907	33,907	33,907	33,907	33,907
PNG Equity Holdings	-	7,349	26,495	33,907	33,907	33,907	33,907	33,907	33,907	33,907	33,907	33,907	33,907
Gasprom Equity Holdings	-	7,349	26,495	33,907	33,907	33,907	33,907	33,907	33,907	33,907	33,907	33,907	33,907
Foreign Equity Holdings	-	22,047	79,485	101,720	117,828	117,828	117,828	125,477	127,075	127,075	127,075	127,075	127,075
CS Equity Position	-	44,094	158,970	203,440	219,547	219,547	219,547	227,197	228,795	228,795	228,795	228,795	228,795
PROJECT RETURN ON EQUITY													
CS Dividends	-	-	-	-	-	-	-	-	-	-	-	-	35,009
Less: Equity Investment	-	44,094	114,876	44,470	16,108	-	-	7,649	1,598	-	-	-	-
Net Cash Flow	-	(44,094)	(114,876)	(44,470)	(16,108)	-	-	(7,649)	(1,598)	-	-	-	35,009
Cumulative	-	(44,094)	(158,970)	(203,440)	(219,547)	(219,547)	(219,547)	(227,197)	(228,795)	(228,795)	(228,795)	(228,795)	(193,785)
Real Net Cash Flow	-	(42,014)	(106,475)	(40,095)	(14,127)	-	-	(6,104)	(1,226)	-	-	-	22,963
Real Return on Equity	3.3%												

083

1672

SIBERIAN GASS PROCESSING PLANT
Equity Returns
(Thousands)

	1994	1995	1996	1997	1998	1999	2000	2001	2002	2003	2004	2005	2006
SNGP RETURNS													
SNGP Share of Common Stock		17%	17%	17%	15%	15%	15%	15%	15%	15%	15%	15%	15%
CS Dividends	-	-	-	-	-	-	-	-	-	-	-	-	35,009
SNGP CS Dividends		-	-	-	-	-	-	-	-	-	-	-	5,188
SNGP CS Dividends		-	-	-	-	-	-	-	-	-	-	-	5,188
Plus: SNGP NGL Pipeline Marginal Profit	-	-	-	-	-	-	-	-	-	-	-	-	-
Less: SNGP Equity	-	7,349	19,146	7,412	-	-	-	-	-	-	-	-	-
SNGP Net Cash Flow	-	(7,349)	(19,146)	(7,412)	-	-	-	-	-	-	-	-	5,188
Real SNGP Net Cash Flow	-	(7,002)	(17,746)	(6,683)	-	-	-	-	-	-	-	-	3,403
SNGP Real Return on Equity	3.1%												
PNG RETURNS													
PNG Share of Common Stock		17%	17%	17%	15%	15%	15%	15%	15%	15%	15%	15%	15%
CS Dividends	-	-	-	-	-	-	-	-	-	-	-	-	35,009
PNG CS Dividends		-	-	-	-	-	-	-	-	-	-	-	5,188
PNG CS Dividends		-	-	-	-	-	-	-	-	-	-	-	5,188
Plus: PNG Wet Gas Marginal Profit	-	-	-	-	-	-	-	-	-	-	-	-	-
Less: PNG Equity	-	7,349	19,146	7,412	-	-	-	-	-	-	-	-	-
PNG Net Cash Flow	-	(7,349)	(19,146)	(7,412)	-	-	-	-	-	-	-	-	5,188
Real PNG Net Cash Flow	-	(7,002)	(17,746)	(6,683)	-	-	-	-	-	-	-	-	3,403
PNG Real Return on Equity	3.1%												
GASPROM RETURNS													
Gasprom Share of Common Stock		17%	17%	17%	15%	15%	15%	15%	15%	15%	15%	15%	15%
CS Dividends	-	-	-	-	-	-	-	-	-	-	-	-	35,009
Gasprom CS Dividends		-	-	-	-	-	-	-	-	-	-	-	5,188
Gasprom CS Dividends		-	-	-	-	-	-	-	-	-	-	-	5,188
Plus: Gasprom Transport Marginal Profit	-	-	-	-	-	-	-	-	-	-	-	-	-
Less: Gasprom Equity	-	7,349	19,146	7,412	-	-	-	-	-	-	-	-	-
Gasprom Net Cash Flow	-	(7,349)	(19,146)	(7,412)	-	-	-	-	-	-	-	-	5,188
Real Gasprom Net Cash Flow	-	(7,002)	(17,746)	(6,683)	-	-	-	-	-	-	-	-	3,403
Gasprom Real Return on Equity	3.1%												
FOREIGN INVESTOR RETURNS													
Foreign Share of Common Stock		50%	50%	50%	54%	54%	54%	55%	56%	56%	56%	56%	56%
CS Dividends	-	-	-	-	-	-	-	-	-	-	-	-	35,009
Foreign CS Dividends		-	-	-	-	-	-	-	-	-	-	-	19,445
Foreign CS Dividends		-	-	-	-	-	-	-	-	-	-	-	19,445
Less: Foreign Equity	-	22,047	57,438	22,235	-	-	-	-	-	-	-	-	-
Less: Additional Equity Investment	-	-	-	-	16,108	-	-	7,649	1,598	-	-	-	-
Foreign Net Cash Flow	-	(22,047)	(57,438)	(22,235)	(16,108)	-	-	(7,649)	(1,598)	-	-	-	19,445
Real Foreign Cash Flow	-	(21,007)	(53,237)	(20,048)	(14,127)	-	-	(6,104)	(1,226)	-	-	-	12,754
Foreign Real Return on Equity	3.4%												

SIBERIAN GASS PROCESSING PLANT
Equity Returns

(Thousands)

	2007	2008	2009	2010	2011	2012	2013	2014	2015	Total
EQUITY INVESTMENT										
SNGP Equity	-	-	-	-	-	-	-	-	-	33,907
PNG Equity	-	-	-	-	-	-	-	-	-	33,907
Gasprom Equity	-	-	-	-	-	-	-	-	-	33,907
Foreign Equity	-	-	-	-	-	-	-	-	-	101,720
Additional Equity	-	-	-	-	-	-	-	-	-	25,355
Total Equity	-	-	-	-	-	-	-	-	-	228,795
CUMULATIVE EQUITY INVESTMENT										
SNGP Equity Holdings	33,907	33,907	33,907	33,907	33,907	33,907	33,907	33,907	33,907	
PNG Equity Holdings	33,907	33,907	33,907	33,907	33,907	33,907	33,907	33,907	33,907	
Gasprom Equity Holdings	33,907	33,907	33,907	33,907	33,907	33,907	33,907	33,907	33,907	
Foreign Equity Holdings	127,075	127,075	127,075	127,075	127,075	127,075	127,075	127,075	127,075	
CS Equity Position	228,795	228,795	228,795	228,795	228,795	228,795	228,795	228,795	228,795	
PROJECT RETURN ON EQUITY										
CS Dividends	64,020	55,167	55,980	58,219	60,548	62,970	65,489	68,108	83,765	609,275
Less: Equity Investment	-	-	-	-	-	-	-	-	-	228,795
Net Cash Flow	64,020	55,167	55,980	58,219	60,548	62,970	65,489	68,108	83,765	380,481
Cumulative	(129,765)	(74,598)	(18,618)	39,601	100,149	163,119	228,608	296,716	380,481	
Real Net Cash Flow	40,377	33,455	32,642	32,642	32,642	32,642	32,642	32,642	38,602	121,208
Real Return on Equity										

1674

085

SIBERIAN GASS PROCESSING PLANT
Equity Returns

(Thousands)

	2007	2008	2009	2010	2011	2012	2013	2014	2015	Total
SNGP RETURNS										
SNGP Share of Common Stock	15%	15%	15%	15%	15%	15%	15%	15%	15%	
CS Dividends	64,020	55,167	55,980	58,219	60,548	62,970	65,489	68,108	83,765	609,275
SNGP CS Dividends	9,488	8,176	8,296	8,628	8,973	9,332	9,705	10,093	12,414	90,293
SNGP CS Dividends	9,488	8,176	8,296	8,628	8,973	9,332	9,705	10,093	12,414	90,293
Plus: SNGP NGL Pipeline Marginal Profit	-	-	-	-	-	-	-	-	-	-
Less: SNGP Equity	-	-	-	-	-	-	-	-	-	33,907
SNGP Net Cash Flow	9,488	8,176	8,296	8,628	8,973	9,332	9,705	10,093	12,414	56,386
Real SNGP Net Cash Flow	5,984	4,958	4,837	4,837	4,837	4,837	4,837	4,837	5,721	17,659
SNGP Real Return on Equity										
PNG RETURNS										
PNG Share of Common Stock	15%	15%	15%	15%	15%	15%	15%	15%	15%	
CS Dividends	64,020	55,167	55,980	58,219	60,548	62,970	65,489	68,108	83,765	609,275
PNG CS Dividends	9,488	8,176	8,296	8,628	8,973	9,332	9,705	10,093	12,414	90,293
PNG CS Dividends	9,488	8,176	8,296	8,628	8,973	9,332	9,705	10,093	12,414	90,293
Plus: PNG Wet Gas Marginal Profit	-	-	-	-	-	-	-	-	-	-
Less: PNG Equity	-	-	-	-	-	-	-	-	-	33,907
PNG Net Cash Flow	9,488	8,176	8,296	8,628	8,973	9,332	9,705	10,093	12,414	56,386
Real PNG Net Cash Flow	5,984	4,958	4,837	4,837	4,837	4,837	4,837	4,837	5,721	17,659
PNG Real Return on Equity										
GASPROM RETURNS										
Gasprom Share of Common Stock	15%	15%	15%	15%	15%	15%	15%	15%	15%	
CS Dividends	64,020	55,167	55,980	58,219	60,548	62,970	65,489	68,108	83,765	609,275
Gasprom CS Dividends	9,488	8,176	8,296	8,628	8,973	9,332	9,705	10,093	12,414	90,293
Gasprom CS Dividends	9,488	8,176	8,296	8,628	8,973	9,332	9,705	10,093	12,414	90,293
Plus: Gasprom Transport Marginal Profit	-	-	-	-	-	-	-	-	-	-
Less: Gasprom Equity	-	-	-	-	-	-	-	-	-	33,907
Gasprom Net Cash Flow	9,488	8,176	8,296	8,628	8,973	9,332	9,705	10,093	12,414	56,386
Real Gasprom Net Cash Flow	5,984	4,958	4,837	4,837	4,837	4,837	4,837	4,837	5,721	17,659
Gasprom Real Return on Equity										
FOREIGN INVESTOR RETURNS										
Foreign Share of Common Stock	56%	56%	56%	56%	56%	56%	56%	56%	56%	
CS Dividends	64,020	55,167	55,980	58,219	60,548	62,970	65,489	68,108	83,765	609,275
Foreign CS Dividends	35,557	30,641	31,092	32,335	33,629	34,974	36,373	37,828	46,524	338,397
Foreign CS Dividends	35,557	30,641	31,092	32,335	33,629	34,974	36,373	37,828	46,524	338,397
Less: Foreign Equity	-	-	-	-	-	-	-	-	-	101,720
Less: Additional Equity Investment	-	-	-	-	-	-	-	-	-	25,355
Foreign Net Cash Flow	35,557	30,641	31,092	32,335	33,629	34,974	36,373	37,828	46,524	211,323
Real Foreign Cash Flow	22,426	18,581	18,130	18,130	18,130	18,130	18,130	18,130	21,440	68,229
Foreign Real Return on Equity										

SIBERIAN GAS PROCESSING PLANT
Data and Key Results

TIMING DATA

Cost Estimate Month	Oct 93	First, Last Operation Month	Jan 96	Dec 15
Financial Closing Month	Jan 95	Economic Life	20.00	

ENGINEERING DATA

	1994	1995	1996	1997	1998	1999	2000	2001
Rated Capacity (BCM/yr)in 1996, 1998	2.14	4.28						
Stream Factor		-	100%	100%	100%	100%	100%	100%
Operations Partial Year Factor	-	-	1.000	1.000	1.000	100%	100%	100%
Wet Gas Processed (MCM)	-	-	2.14	2.14	4.28	4.28	4.28	4.28
Dry Gas Production (BCM)	-	-	1.80	1.91	3.76	3.76	3.76	3.76
NGL Production (MMTons)	-	-	0.36	0.49	1.07	1.07	1.07	1.07

REVENUE DATA (1996 $'s)

NGL Domestic Price ($/Ton)	67.86	Domestic Gas Price ($/MCM)	21.36
NGL Export Price ($/Ton)	144.00	Export Gas Price ($/MCM)	112.50
% NGL for Export	-	% Dry Gas for Export	-

OPERATING COST DATA (1993 $000's)

			TRANSPORT COSTS (1996 $'s)	DOM	EXP
Wet Gas Feedstock Cost ($/MCM)	-		Dry Gas In-Russia Costs ($/MCM)	-	40.00
Chemicals Cost	382		Dry Gas Export Costs		32.00
Utility Cost	19,432		NGL In-Russia Costs ($/Ton)	1.94	36.55
Maintenance Cost	985		NGL Pipeline Costs	43.52	43.52
Labor Cost, Benefits	1,364	518	NGL Port Loading Charge		1.62
Other Expenses	10,134		NGL Shipping Cost		15.10

CAPITAL COST DATA (1993 $000's)

	1995	1996	1997	Total
Gubkinsky GPP Expansion	43,700	157,500	90,300	291,500
Tarasovsky Gas Processing Plant	-	-	-	-
Gas Gathering Systems Cost	17,900	53,700	40,200	111,800
Metering Facilities Cost	440	1,290	970	2,700
Contributed Assets	9,841	22,150	11,883	43,874
Other Owners Costs	8,000	-	-	8,000
Infrastructure Costs	9,306	31,874	19,721	60,900
Initial Working Capital	2,839	-	-	2,839
Capital Costs	92,026	266,513	163,074	521,613

WORKING CAPITAL DATA

Days Receivables	45
Days Payables	45

FINANCING DATA

	WB/Other Loan	
% of Permanent Financing	70%	
Loan Amount, Commitment	420,949	420,950
Loan Interest Rate	8.15%	
Start of Repayment, Repayment Period	Jan 98	9.0
Commitment Fees %	0.25%	
Upfront Fee %	-	
Other Fin Fees & Close Costs (%, Amt)	-	

KEY RESULTS SUMMARY

Real Return on Investment (no taxes)	11.7%
Unleveraged Payback (Yrs)	5.9
Nominal NPV (Oct '93) @ 15.0%	9,794
Real Return on Equity	8.7%
Leveraged Payback (Yrs)	9.2
Nominal NPV (Oct '93) @ 15.0%	(27,651)
Min Debt Service Coverage	100%
Average Debt Service Coverage	133%

FINANCING DATA (cont'd)

	Actual
Required Reserves (1st Operating Yr)	39,345
Cash Flow Dedicated to Reserves	100%
Reinvestment Rate	3.0%

TAX DATA

Tax & Book In Service Month	Jan 96
Profits Tax	32.00%
15% Yr SL Property %	100.0%
Carryforward Years	5
VAT Tax (% of CapEx)	20.0%
Property Tax (% of Fixed Assets)	-
Road Tax (% of Revenues)	0.4%
Dry Gas Export Tariff ('93 $/MCM)	-
NGL Export Tariff ('93 $/Ton)	-

ECONOMIC DATA

Global Inflation Rate	2.8% **
Capital Cost Esc Rate	2.8%
O&M Esc Rate	2.8%
Export Gas Price Esc Rate	2.8%
Domestic Gas Price Esc Rate	2.8%
Export NGL Price Esc Rate	2.8%
Domestic NGL Price Esc Rate	2.8%

** Until 2000, 4% thereafter
(all escalation equivalent to inflation)

SENSITIVITY ANALYSIS FACTORS

O&M Cost	1.00
Gas Price	1.25
NGL Price	1.00
Capital Cost	1.00
Transport Cost	1.00
Wet Gas Price	1.00

1676

081

1671

SIBERIAN GAS PROCESSING PLANT
Annual Sources and Uses of Funds During Construction

($US Thousands)

	1995	1996	1997	Total	%
SOURCES OF FUNDS					
World Bank/Other Loan	68,887	207,696	144,366	420,949	70%
SIBNG Cash Equity	-	-	-	-	-
PNG Cash Equity	-	-	-	-	-
Gasprom Cash Equity	4,921	11,075	5,941	21,937	4%
SIBNG Equity	4,921	11,075	5,941	21,937	4%
PNG Equity	4,921	11,075	5,941	21,937	4%
Foreign Equity	14,762	33,224	17,824	65,811	11%
JV Operating Cash Flow	-	22,564	26,222	48,786	8%
Total Sources of Funds	98,411	296,708	206,237	601,356	100%
USES OF FUNDS					
Gubkinsky GPP Expansion	45,950	169,606	99,266	314,821	
Tarasovsky Gas Processing Plant	-	-	-	-	
Gas Gathering Systems Cost	18,820	57,765	44,281	120,866	
Metering Facilities Costs	463	1,388	1,068	2,919	
Infrastructure Costs	9,785	34,314	21,692	65,791	
Contributed Assets	9,841	22,150	11,883	43,874	
Other Owners Costs	8,281	-	-	8,281	
Initial Working Capital	3,000	-	-	3,000	
Capital Costs	96,139	285,221	178,191	559,551	93%
Other Loan Interest	1,260	10,776	27,875	39,911	
Other Loan Commitment Fees	1,012	711	171	1,894	
Upfront Fees	-	-	-	-	
Financing Costs	2,272	11,487	28,046	41,805	7%
Total Uses of Funds	98,411	296,708	206,237	601,356	100%

	$	%
Total Debt	420,949	70%
Operating Cash	48,786	8%
Equity Requirement	131,621	22%
	601,356	100%

MEMORANDA	WB/Other Loan	
Loan Draws, Amount	420,949	
Standby Facility	-	
Constr Loan Draws + Standby, Commitment	420,949	420,950
Constr Loan Int Rate	8.15%	
Commitment Fee Rate	0.25%	
Upfront Fee Rate	-	
Other Financing Fees (%, Amt)	-	
Repayment Period	9.0	

** NOTE: ANNUAL SANDU STATEMENT IS FOR PRESENTATION ONLY. VALUES ARE FROM QUARTERLY CALCULATIONS.

VAT TAX FUNDING				
VAT Tax	15,003	52,614	33,262	100,879
VAT Recovery Expressed in $'s	435	8,945	30,692	40,072
Net VAT Payment	14,569	43,669	2,570	60,807
PNG Cash Equity for VAT	2,428	7,278	428	10,135
SNGP Cash Equity for VAT	2,428	7,278	428	10,135
Gasprom Cash Equity for VAT	2,428	7,278	428	10,135
Foreign Equity for VAT	7,284	21,834	1,285	30,404
Cash Equity for VAT	14,569	43,669	2,570	60,807

Equity Requirement	131,621
Equity for VAT	60,807
Total Equity	192,428

088

SIBERIAN GASS PROCESSING PLANT
Equity Returns
(Thousands)

	1994	1995	1996	1997	1998	1999	2000	2001	2002	2003	2004	2005	2006
EQUITY INVESTMENT													
SNGP Equity	-	7,349	18,353	6,370	-	-	-	-	-	-	-	-	-
PNG Equity	-	7,349	18,353	6,370	-	-	-	-	-	-	-	-	-
Gasprom Equity	-	7,349	18,353	6,370	-	-	-	-	-	-	-	-	-
Foreign Equity	-	22,046	55,059	19,109	-	-	-	-	-	-	-	-	-
Additional Equity	-	-	-	-	-	-	-	-	-	-	-	-	-
Total Equity	-	44,092	110,118	38,219	-	-	-	-	-	-	-	-	-
CUMULATIVE EQUITY INVESTMENT													
SNGP Equity Holdings	-	7,349	25,702	32,071	32,071	32,071	32,071	32,071	32,071	32,071	32,071	32,071	32,071
PNG Equity Holdings	-	7,349	25,702	32,071	32,071	32,071	32,071	32,071	32,071	32,071	32,071	32,071	32,071
Gasprom Equity Holdings	-	7,349	25,702	32,071	32,071	32,071	32,071	32,071	32,071	32,071	32,071	32,071	32,071
Foreign Equity Holdings	-	22,046	77,105	96,214	96,214	96,214	96,214	96,214	96,214	96,214	96,214	96,214	96,214
CS Equity Position	-	44,092	154,210	192,428	192,428	192,428	192,428	192,428	192,428	192,428	192,428	192,428	192,428
PROJECT RETURN ON EQUITY													
CS Dividends	-	-	-	-	-	-	3,155	14,059	20,856	27,778	30,087	28,041	51,654
Less: Equity Investment	-	44,092	110,118	38,219	-	-	-	-	-	-	-	-	-
Net Cash Flow	-	(44,092)	(110,118)	(38,219)	-	-	3,155	14,059	20,856	27,778	30,087	28,041	51,654
Cumulative	-	(44,092)	(154,210)	(192,428)	(192,428)	(192,428)	(189,273)	(175,214)	(154,358)	(126,580)	(96,492)	(68,452)	(16,798)
Real Net Cash Flow	-	(42,012)	(102,065)	(34,459)	-	-	2,619	11,220	16,003	20,495	21,345	19,128	33,880
Real Return on Equity	8.7%												

1678

089

1679

SIBERIAN GASS PROCESSING PLANT
Equity Returns
(Thousands)

	1994	1995	1996	1997	1998	1999	2000	2001	2002	2003	2004	2005	2006
SNGP RETURNS													
SNGP Share of Common Stock		17%	17%	17%	17%	17%	17%	17%	17%	17%	17%	17%	17%
CS Dividends	-	-	-	-	-	-	3,155	14,059	20,856	27,778	30,087	28,041	51,654
SNGP CS Dividends		-	-	-	-	-	526	2,343	3,476	4,630	5,015	4,673	8,609
SNGP CS Dividends		-	-	-	-	-	526	2,343	3,476	4,630	5,015	4,673	8,609
Plus: SNGP NGL Pipeline Marginal Profit	-	-	-	-	-	-	-	-	-	-	-	-	-
Less: SNGP Equity	-	7,349	18,353	6,370	-	-	-	-	-	-	-	-	-
SNGP Net Cash Flow	-	(7,349)	(18,353)	(6,370)	-	-	526	2,343	3,476	4,630	5,015	4,673	8,609
Real SNGP Net Cash Flow	-	(7,002)	(17,011)	(5,743)	-	-	436	1,870	2,667	3,416	3,557	3,188	5,647
SNGP Real Return on Equity	8.7%												
PNG RETURNS													
PNG Share of Common Stock		17%	17%	17%	17%	17%	17%	17%	17%	17%	17%	17%	17%
CS Dividends	-	-	-	-	-	-	3,155	14,059	20,856	27,778	30,087	28,041	51,654
PNG CS Dividends		-	-	-	-	-	526	2,343	3,476	4,630	5,015	4,673	8,609
PNG CS Dividends		-	-	-	-	-	526	2,343	3,476	4,630	5,015	4,673	8,609
Plus: PNG Wet Gas Marginal Profit	-	-	-	-	-	-	-	-	-	-	-	-	-
Less: PNG Equity	-	7,349	18,353	6,370	-	-	-	-	-	-	-	-	-
PNG Net Cash Flow	-	(7,349)	(18,353)	(6,370)	-	-	526	2,343	3,476	4,630	5,015	4,673	8,609
Real PNG Net Cash Flow	-	(7,002)	(17,011)	(5,743)	-	-	436	1,870	2,667	3,416	3,557	3,188	5,647
PNG Real Return on Equity	8.7%												
GASPROM RETURNS													
Gasprom Share of Common Stock		17%	17%	17%	17%	17%	17%	17%	17%	17%	17%	17%	17%
CS Dividends	-	-	-	-	-	-	3,155	14,059	20,856	27,778	30,087	28,041	51,654
Gasprom CS Dividends		-	-	-	-	-	526	2,343	3,476	4,630	5,015	4,673	8,609
Gasprom CS Dividends		-	-	-	-	-	526	2,343	3,476	4,630	5,015	4,673	8,609
Plus: Gasprom Transport Marginal Profit	-	-	-	-	-	-	-	-	-	-	-	-	-
Less: Gasprom Equity	-	7,349	18,353	6,370	-	-	-	-	-	-	-	-	-
Gasprom Net Cash Flow	-	(7,349)	(18,353)	(6,370)	-	-	526	2,343	3,476	4,630	5,015	4,673	8,609
Real Gasprom Net Cash Flow	-	(7,002)	(17,011)	(5,743)	-	-	436	1,870	2,667	3,416	3,557	3,188	5,647
Gasprom Real Return on Equity	8.7%												
FOREIGN INVESTOR RETURNS													
Foreign Share of Common Stock		50%	50%	50%	50%	50%	50%	50%	50%	50%	50%	50%	50%
CS Dividends	-	-	-	-	-	-	3,155	14,059	20,856	27,778	30,087	28,041	51,654
Foreign CS Dividends		-	-	-	-	-	1,578	7,030	10,428	13,889	15,044	14,020	25,827
Foreign CS Dividends		-	-	-	-	-	1,578	7,030	10,428	13,889	15,044	14,020	25,827
Less: Foreign Equity	-	22,046	55,059	19,109	-	-	-	-	-	-	-	-	-
Less: Additional Equity Investment	-	-	-	-	-	-	-	-	-	-	-	-	-
Foreign Net Cash Flow	-	(22,046)	(55,059)	(19,109)	-	-	1,578	7,030	10,428	13,889	15,044	14,020	25,827
Real Foreign Cash Flow	-	(21,006)	(51,033)	(17,229)	-	-	1,309	5,610	8,002	10,248	10,672	9,564	16,940
Foreign Real Return on Equity	8.7%												

090

SIBERIAN GASS PROCESSING PLANT
Equity Returns

(Thousands)

	2007	2008	2009	2010	2011	2012	2013	2014	2015	Total
EQUITY INVESTMENT										
SNGP Equity	-	-	-	-	-	-	-	-	-	32,071
PNG Equity	-	-	-	-	-	-	-	-	-	32,071
Gasprom Equity	-	-	-	-	-	-	-	-	-	32,071
Foreign Equity	-	-	-	-	-	-	-	-	-	96,214
Additional Equity	-	-	-	-	-	-	-	-	-	-
Total Equity	-	-	-	-	-	-	-	-	-	192,428
CUMULATIVE EQUITY INVESTMENT										
SNGP Equity Holdings	32,071	32,071	32,071	32,071	32,071	32,071	32,071	32,071	32,071	
PNG Equity Holdings	32,071	32,071	32,071	32,071	32,071	32,071	32,071	32,071	32,071	
Gasprom Equity Holdings	32,071	32,071	32,071	32,071	32,071	32,071	32,071	32,071	32,071	
Foreign Equity Holdings	96,214	96,214	96,214	96,214	96,214	96,214	96,214	96,214	96,214	
CS Equity Position	192,428	192,428	192,428	192,428	192,428	192,428	192,428	192,428	192,428	
PROJECT RETURN ON EQUITY										
CS Dividends	67,635	70,340	73,154	76,080	79,123	82,288	85,579	89,003	109,463	908,295
Less: Equity Investment	-	-	-	-	-	-	-	-	-	192,428
Net Cash Flow	67,635	70,340	73,154	76,080	79,123	82,288	85,579	89,003	109,463	715,866
Cumulative	50,837	121,177	194,330	270,410	349,533	431,821	517,401	606,403	715,866	
Real Net Cash Flow	42,656	42,656	42,656	42,656	42,656	42,656	42,656	42,656	50,444	337,849
Real Return on Equity										

SIBERIAN GASS PROCESSING PLANT
Equity Returns
(Thousands)

	2007	2008	2009	2010	2011	2012	2013	2014	2015	Total
SNGP RETURNS										
SNGP Share of Common Stock	17%	17%	17%	17%	17%	17%	17%	17%	17%	
CS Dividends	67,635	70,340	73,154	76,080	79,123	82,288	85,579	89,003	109,463	908,295
SNGP CS Dividends	11,272	11,723	12,192	12,680	13,187	13,715	14,263	14,834	18,244	151,382
SNGP CS Dividends	11,272	11,723	12,192	12,680	13,187	13,715	14,263	14,834	18,244	151,382
Plus: SNGP NGL Pipeline Marginal Profit	-	-	-	-	-	-	-	-	-	-
Less: SNGP Equity	-	-	-	-	-	-	-	-	-	32,071
SNGP Net Cash Flow	11,272	11,723	12,192	12,680	13,187	13,715	14,263	14,834	18,244	119,311
Real SNGP Net Cash Flow	7,109	7,109	7,109	7,109	7,109	7,109	7,109	7,109	8,407	56,308
SNGP Real Return on Equity										
PNG RETURNS										
PNG Share of Common Stock	17%	17%	17%	17%	17%	17%	17%	17%	17%	
CS Dividends	67,635	70,340	73,154	76,080	79,123	82,288	85,579	89,003	109,463	908,295
PNG CS Dividends	11,272	11,723	12,192	12,680	13,187	13,715	14,263	14,834	18,244	151,382
PNG CS Dividends	11,272	11,723	12,192	12,680	13,187	13,715	14,263	14,834	18,244	151,382
Plus: PNG Wet Gas Marginal Profit	-	-	-	-	-	-	-	-	-	-
Less: PNG Equity	-	-	-	-	-	-	-	-	-	32,071
PNG Net Cash Flow	11,272	11,723	12,192	12,680	13,187	13,715	14,263	14,834	18,244	119,311
Real PNG Net Cash Flow	7,109	7,109	7,109	7,109	7,109	7,109	7,109	7,109	8,407	56,308
PNG Real Return on Equity										
GASPROM RETURNS										
Gasprom Share of Common Stock	17%	17%	17%	17%	17%	17%	17%	17%	17%	
CS Dividends	67,635	70,340	73,154	76,080	79,123	82,288	85,579	89,003	109,463	908,295
Gasprom CS Dividends	11,272	11,723	12,192	12,680	13,187	13,715	14,263	14,834	18,244	151,382
Gasprom CS Dividends	11,272	11,723	12,192	12,680	13,187	13,715	14,263	14,834	18,244	151,382
Plus: Gasprom Transport Marginal Profit	-	-	-	-	-	-	-	-	-	-
Less: Gasprom Equity	-	-	-	-	-	-	-	-	-	32,071
Gasprom Net Cash Flow	11,272	11,723	12,192	12,680	13,187	13,715	14,263	14,834	18,244	119,311
Real Gasprom Net Cash Flow	7,109	7,109	7,109	7,109	7,109	7,109	7,109	7,109	8,407	56,308
Gasprom Real Return on Equity										
FOREIGN INVESTOR RETURNS										
Foreign Share of Common Stock	50%	50%	50%	50%	50%	50%	50%	50%	50%	
CS Dividends	67,635	70,340	73,154	76,080	79,123	82,288	85,579	89,003	109,463	908,295
Foreign CS Dividends	33,817	35,170	36,577	38,040	39,562	41,144	42,790	44,501	54,731	454,147
Foreign CS Dividends	33,817	35,170	36,577	38,040	39,562	41,144	42,790	44,501	54,731	454,147
Less: Foreign Equity	-	-	-	-	-	-	-	-	-	96,214
Less: Additional Equity Investment	-	-	-	-	-	-	-	-	-	-
Foreign Net Cash Flow	33,817	35,170	36,577	38,040	39,562	41,144	42,790	44,501	54,731	357,933
Real Foreign Cash Flow	21,328	21,328	21,328	21,328	21,328	21,328	21,328	21,328	25,222	168,924
Foreign Real Return on Equity										

SIBERIAN GAS PROCESSING PLANT
Data and Key Results

TIMING DATA

Cost Estimate Month	Oct 93	First, Last Operation Month	Jan 96 Dec 15
Financial Closing Month	Jan 95	Economic Life	20.00

ENGINEERING DATA

	1994	1995	1996	1997	1998	1999	2000	2001
Rated Capacity (BCM/yr)in 1996, 1998	2.14	4.28						
Stream Factor		-	100%	100%	100%	100%	100%	100%
Operations Partial Year Factor	-	-	1.000	1.000	1.000	100%	100%	100%
Wet Gas Processed (MCM)	-	-	2.14	2.14	4.28	4.28	4.28	4.28
Dry Gas Production (BCM)	-	-	1.80	1.91	3.76	3.76	3.76	3.76
NGL Production (MMTons)	-	-	0.36	0.49	1.07	1.07	1.07	1.07

REVENUE DATA (1996 $'s)

NGL Domestic Price ($/Ton)	67.86	Domestic Gas Price ($/MCM)	12.82
NGL Export Price ($/Ton)	144.00	Export Gas Price ($/MCM)	67.50
% NGL for Export	-	% Dry Gas for Export	-

OPERATING COST DATA (1993 $000's)

Wet Gas Feedstock Cost ($/MCM)	-	
Chemicals Cost	382	
Utility Cost	19,432	
Maintenance Cost	985	
Labor Cost, Benefits	1,364	518
Other Expenses	10,134	

TRANSPORT COSTS (1996 $'s)

	DOM	EXP
Dry Gas In-Russia Costs ($/MCM)	-	40.00
Dry Gas Export Costs		32.00
NGL In-Russia Costs ($/Ton)	1.94	36.55
NGL Pipeline Costs	43.52	43.52
NGL Port Loading Charge		1.62
NGL Shipping Cost		15.10

CAPITAL COST DATA (1993 $000's)

	1995	1996	1997	Total
Gubkinsky GPP Expansion	43,700	157,500	90,300	291,500
Tarasovsky Gas Processing Plant	-	-	-	-
Gas Gathering Systems Cost	17,900	53,700	40,200	111,800
Metering Facilities Cost	440	1,290	970	2,700
Contributed Assets	9,843	25,583	16,052	51,478
Other Owners Costs	8,000	-	-	8,000
Infrastructure Costs	9,306	31,874	19,721	60,900
Initial Working Capital	2,839	-	-	2,839
Capital Costs	92,027	269,946	167,243	529,217

WORKING CAPITAL DATA

Days Receivables	45
Days Payables	45

FINANCING DATA

	WB/Other Loan	
% of Permanent Financing	70%	
Loan Amount, Commitment	426,546	426,546
Loan Interest Rate	8.15%	
Start of Repayment, Repayment Period	Jan 98	9.0
Commitment Fees %	0.25%	
Upfront Fee %	-	
Other Fin Fees & Close Costs (%, Amt)	-	

KEY RESULTS SUMMARY

Real Return on Investment (no taxes)	3.1%
Unleveraged Payback (Yrs)	10.6
Nominal NPV (Oct '93) @ 15.0%	(146523)
Real Return on Equity	(2.9%)
Leveraged Payback (Yrs)	17.4
Nominal NPV (Oct '93) @ 15.0%	(155760)
Min Debt Service Coverage	59%
Average Debt Service Coverage	73%

FINANCING DATA (cont'd)

	Actual
Required Reserves (1st Operating Yr)	39,868
Cash Flow Dedicated to Reserves	100%
Reinvestment Rate	3.0%

TAX DATA

Tax & Book In Service Month	Jan 96
Profits Tax	32.00%
15% Yr SL Property %	100.0%
Carryforward Years	5
VAT Tax (% of CapEx)	20.0%
Property Tax (% of Fixed Assets)	-
Road Tax (% of Revenues)	0.4%
Dry Gas Export Tariff ('93 $/MCM)	-
NGL Export Tariff ('93 $/Ton)	-

ECONOMIC DATA

Global Inflation Rate	2.8% **
Capital Cost Esc Rate	2.8%
O&M Esc Rate	2.8%
Export Gas Price Esc Rate	2.8%
Domestic Gas Price Esc Rate	2.8%
Export NGL Price Esc Rate	2.8%
Domestic NGL Price Esc Rate	2.8%

** Until 2000, 4% thereafter
(all escalation equivalent to inflation)

SENSITIVITY ANALYSIS FACTORS

O&M Cost	1.00
Gas Price	0.75
NGL Price	1.00
Capital Cost	1.00
Transport Cost	1.00
Wet Gas Price	1.00

1687 093

SIBERIAN GAS PROCESSING PLANT
Annual Sources and Uses of Funds During Construction

($US Thousands)

	1995	1996	1997	Total	%
SOURCES OF FUNDS					
World Bank/Other Loan	68,899	210,158	147,489	426,546	70%
SIBNG Cash Equity	-	-	-	-	-
PNG Cash Equity	-	-	-	-	-
Gasprom Cash Equity	4,921	12,791	8,026	25,739	4%
SIBNG Equity	4,921	12,791	8,026	25,739	4%
PNG Equity	4,921	12,791	8,026	25,739	4%
Foreign Equity	14,764	38,374	24,079	77,217	13%
JV Operating Cash Flow	-	13,319	15,053	28,372	5%
Total Sources of Funds	98,427	300,226	210,699	609,351	100%
USES OF FUNDS					
Gubkinsky GPP Expansion	45,950	169,606	99,266	314,821	
Tarasovsky Gas Processing Plant	-	-	-	-	
Gas Gathering Systems Cost	18,820	57,765	44,281	120,866	
Metering Facilities Costs	463	1,388	1,068	2,919	
Infrastructure Costs	9,785	34,314	21,692	65,791	
Contributed Assets	9,843	25,583	16,052	51,478	
Other Owners Costs	8,281	-	-	8,281	
Initial Working Capital	3,000	-	-	3,000	
Capital Costs	96,141	288,654	182,360	567,155	93%
Other Loan Interest	1,260	10,849	28,162	40,271	
Other Loan Commitment Fees	1,026	723	176	1,925	
Upfront Fees	-	-	-	-	
Financing Costs	2,286	11,572	28,338	42,196	7%
Total Uses of Funds	98,427	300,226	210,699	609,351	100%

	$	%
Total Debt	426,546	70%
Operating Cash	28,372	5%
Equity Requirement	154,434	25%
	609,351	100%

MEMORANDA	WB/Other Loan	
Loan Draws, Amount	426,546	
Standby Facility	-	
Constr Loan Draws + Standby, Commitment	426,546	426,546
Constr Loan Int Rate	8.15%	
Commitment Fee Rate	0.25%	
Upfront Fee Rate	-	
Other Financing Fees (%, Amt)	-	
Repayment Period	9.0	

** NOTE: ANNUAL SANDU STATEMENT IS FOR PRESENTATION ONLY. VALUES ARE FROM QUARTERLY CALCULATIONS.

VAT TAX FUNDING				
VAT Tax	15,003	52,614	33,262	100,879
VAT Recovery Expressed in $'s	435	8,945	30,692	40,072
Net VAT Payment	14,569	43,669	2,570	60,807
PNG Cash Equity for VAT	2,428	7,278	428	10,135
SNGP Cash Equity for VAT	2,428	7,278	428	10,135
Gasprom Cash Equity for VAT	2,428	7,278	428	10,135
Foreign Equity for VAT	7,284	21,834	1,285	30,404
Cash Equity for VAT	14,569	43,669	2,570	60,807

Equity Requirement	154,434
Equity for VAT	60,807
Total Equity	215,241

SIBERIAN GASS PROCESSING PLANT
Equity Returns

(Thousands)

	1994	1995	1996	1997	1998	1999	2000	2001	2002	2003	2004	2005	2006
EQUITY INVESTMENT													
SNGP Equity	-	7,349	20,070	8,454	-	-	-	-	-	-	-	-	-
PNG Equity	-	7,349	20,070	8,454	-	-	-	-	-	-	-	-	-
Gasprom Equity	-	7,349	20,070	8,454	-	-	-	-	-	-	-	-	-
Foreign Equity	-	22,048	60,209	25,363	-	-	-	-	-	-	-	-	-
Additional Equity	-	-	-	-	32,501	14,795	21,354	26,694	21,273	15,784	10,226	11,481	6,690
Total Equity	-	44,097	120,418	50,727	32,501	14,795	21,354	26,694	21,273	15,784	10,226	11,481	6,690
CUMULATIVE EQUITY INVESTMENT													
SNGP Equity Holdings	-	7,349	27,419	35,874	35,874	35,874	35,874	35,874	35,874	35,874	35,874	35,874	35,874
PNG Equity Holdings	-	7,349	27,419	35,874	35,874	35,874	35,874	35,874	35,874	35,874	35,874	35,874	35,874
Gasprom Equity Holdings	-	7,349	27,419	35,874	35,874	35,874	35,874	35,874	35,874	35,874	35,874	35,874	35,874
Foreign Equity Holdings	-	22,048	82,257	107,621	140,121	154,916	176,271	202,965	224,238	240,022	250,249	261,730	268,419
CS Equity Position	-	44,097	164,514	215,241	247,742	262,537	283,891	310,586	331,858	347,643	357,869	369,350	376,040
PROJECT RETURN ON EQUITY													
CS Dividends	-	-	-	-	-	-	-	-	-	-	-	-	-
Less: Equity Investment	-	44,097	120,418	50,727	32,501	14,795	21,354	26,694	21,273	15,784	10,226	11,481	6,690
Net Cash Flow	-	(44,097)	(120,418)	(50,727)	(32,501)	(14,795)	(21,354)	(26,694)	(21,273)	(15,784)	(10,226)	(11,481)	(6,690)
Cumulative	-	(44,097)	(164,514)	(215,241)	(247,742)	(262,537)	(283,891)	(310,586)	(331,858)	(347,643)	(357,869)	(369,350)	(376,040)
Real Net Cash Flow	-	(42,016)	(111,612)	(45,737)	(28,505)	(12,623)	(17,723)	(21,303)	(16,323)	(11,646)	(7,255)	(7,832)	(4,388)
Real Return on Equity	(2.9%)												

SIBERIAN GASS PROCESSING PLANT
Equity Returns
(Thousands)

	1994	1995	1996	1997	1998	1999	2000	2001	2002	2003	2004	2005	2006
SNGP RETURNS													
SNGP Share of Common Stock		17%	17%	17%	14%	14%	13%	12%	11%	10%	10%	10%	10%
CS Dividends	-	-	-	-	-	-	-	-	-	-	-	-	-
SNGP CS Dividends		-	-	-	-	-	-	-	-	-	-	-	-
SNGP CS Dividends		-	-	-	-	-	-	-	-	-	-	-	-
Plus: SNGP NGL Pipeline Marginal Profit	-	-	-	-	-	-	-	-	-	-	-	-	-
Less: SNGP Equity	-	7,349	20,070	8,454	-	-	-	-	-	-	-	-	-
SNGP Net Cash Flow	-	(7,349)	(20,070)	(8,454)	-	-	-	-	-	-	-	-	-
Real SNGP Net Cash Flow	-	(7,003)	(18,602)	(7,623)	-	-	-	-	-	-	-	-	-
SNGP Real Return on Equity	#ARITH												
PNG RETURNS													
PNG Share of Common Stock		17%	17%	17%	14%	14%	13%	12%	11%	10%	10%	10%	10%
CS Dividends	-	-	-	-	-	-	-	-	-	-	-	-	-
PNG CS Dividends		-	-	-	-	-	-	-	-	-	-	-	-
PNG CS Dividends		-	-	-	-	-	-	-	-	-	-	-	-
Plus: PNG Wet Gas Marginal Profit	-	-	-	-	-	-	-	-	-	-	-	-	-
Less: PNG Equity	-	7,349	20,070	8,454	-	-	-	-	-	-	-	-	-
PNG Net Cash Flow	-	(7,349)	(20,070)	(8,454)	-	-	-	-	-	-	-	-	-
Real PNG Net Cash Flow	-	(7,003)	(18,602)	(7,623)	-	-	-	-	-	-	-	-	-
PNG Real Return on Equity	(3.0%)												
GASPROM RETURNS													
Gasprom Share of Common Stock		17%	17%	17%	14%	14%	13%	12%	11%	10%	10%	10%	10%
CS Dividends	-	-	-	-	-	-	-	-	-	-	-	-	-
Gasprom CS Dividends		-	-	-	-	-	-	-	-	-	-	-	-
Gasprom CS Dividends		-	-	-	-	-	-	-	-	-	-	-	-
Plus: Gasprom Transport Marginal Profit	-	-	-	-	-	-	-	-	-	-	-	-	-
Less: Gasprom Equity	-	7,349	20,070	8,454	-	-	-	-	-	-	-	-	-
Gasprom Net Cash Flow	-	(7,349)	(20,070)	(8,454)	-	-	-	-	-	-	-	-	-
Real Gasprom Net Cash Flow	-	(7,003)	(18,602)	(7,623)	-	-	-	-	-	-	-	-	-
Gasprom Real Return on Equity	#ARITH												
FOREIGN INVESTOR RETURNS													
Foreign Share of Common Stock		50%	50%	50%	57%	59%	62%	65%	68%	69%	70%	71%	71%
CS Dividends	-	-	-	-	-	-	-	-	-	-	-	-	-
Foreign CS Dividends		-	-	-	-	-	-	-	-	-	-	-	-
Foreign CS Dividends		-	-	-	-	-	-	-	-	-	-	-	-
Less: Foreign Equity	-	22,048	60,209	25,363	-	-	-	-	-	-	-	-	-
Less: Additional Equity Investment	-	-	-	-	32,501	14,795	21,354	26,694	21,273	15,784	10,226	11,481	6,690
Foreign Net Cash Flow	-	(22,048)	(60,209)	(25,363)	(32,501)	(14,795)	(21,354)	(26,694)	(21,273)	(15,784)	(10,226)	(11,481)	(6,690)
Real Foreign Cash Flow	-	(21,008)	(55,806)	(22,868)	(28,505)	(12,623)	(17,723)	(21,303)	(16,323)	(11,646)	(7,255)	(7,832)	(4,388)
Foreign Real Return on Equity	(2.9%)												

SIBERIAN GASS PROCESSING PLANT
Equity Returns

(Thousands)

	2007	2008	2009	2010	2011	2012	2013	2014	2015	Total
EQUITY INVESTMENT										
SNGP Equity	-	-	-	-	-	-	-	-	-	35,874
PNG Equity	-	-	-	-	-	-	-	-	-	35,874
Gasprom Equity	-	-	-	-	-	-	-	-	-	35,874
Foreign Equity	-	-	-	-	-	-	-	-	-	107,621
Additional Equity	-	-	-	-	-	-	-	-	-	160,799
Total Equity	-	-	-	-	-	-	-	-	-	376,040
CUMULATIVE EQUITY INVESTMENT										
SNGP Equity Holdings	35,874	35,874	35,874	35,874	35,874	35,874	35,874	35,874	35,874	
PNG Equity Holdings	35,874	35,874	35,874	35,874	35,874	35,874	35,874	35,874	35,874	
Gasprom Equity Holdings	35,874	35,874	35,874	35,874	35,874	35,874	35,874	35,874	35,874	
Foreign Equity Holdings	268,419	268,419	268,419	268,419	268,419	268,419	268,419	268,419	268,419	
CS Equity Position	376,040	376,040	376,040	376,040	376,040	376,040	376,040	376,040	376,040	
PROJECT RETURN ON EQUITY										
CS Dividends	44,380	46,155	44,876	40,358	41,973	43,652	45,398	47,214	58,067	412,072
Less: Equity Investment	-	-	-	-	-	-	-	-	-	376,040
Net Cash Flow	44,380	46,155	44,876	40,358	41,973	43,652	45,398	47,214	58,067	36,032
Cumulative	(331,660)	(285,505)	(240,629)	(200,271)	(158,298)	(114,646)	(69,249)	(22,035)	36,032	
Real Net Cash Flow	27,990	27,990	26,168	22,628	22,628	22,628	22,628	22,628	26,759	(104,915)
Real Return on Equity										

SIBERIAN GASS PROCESSING PLANT
Equity Returns
(Thousands)

	2007	2008	2009	2010	2011	2012	2013	2014	2015	Total
SNGP RETURNS										
SNGP Share of Common Stock	10%	10%	10%	10%	10%	10%	10%	10%	10%	
CS Dividends	44,380	46,155	44,876	40,358	41,973	43,652	45,398	47,214	58,067	412,072
SNGP CS Dividends	4,234	4,403	4,281	3,850	4,004	4,164	4,331	4,504	5,540	39,311
SNGP CS Dividends	4,234	4,403	4,281	3,850	4,004	4,164	4,331	4,504	5,540	39,311
Plus: SNGP NGL Pipeline Marginal Profit	-	-	-	-	-	-	-	-	-	-
Less: SNGP Equity	-	-	-	-	-	-	-	-	-	35,874
SNGP Net Cash Flow	4,234	4,403	4,281	3,850	4,004	4,164	4,331	4,504	5,540	3,437
Real SNGP Net Cash Flow	2,670	2,670	2,496	2,159	2,159	2,159	2,159	2,159	2,553	(12,045)
SNGP Real Return on Equity										
PNG RETURNS										
PNG Share of Common Stock	10%	10%	10%	10%	10%	10%	10%	10%	10%	
CS Dividends	44,380	46,155	44,876	40,358	41,973	43,652	45,398	47,214	58,067	412,072
PNG CS Dividends	4,234	4,403	4,281	3,850	4,004	4,164	4,331	4,504	5,540	39,311
PNG CS Dividends	4,234	4,403	4,281	3,850	4,004	4,164	4,331	4,504	5,540	39,311
Plus: PNG Wet Gas Marginal Profit	-	-	-	-	-	-	-	-	-	-
Less: PNG Equity	-	-	-	-	-	-	-	-	-	35,874
PNG Net Cash Flow	4,234	4,403	4,281	3,850	4,004	4,164	4,331	4,504	5,540	3,437
Real PNG Net Cash Flow	2,670	2,670	2,496	2,159	2,159	2,159	2,159	2,159	2,553	(12,045)
PNG Real Return on Equity										
GASPROM RETURNS										
Gasprom Share of Common Stock	10%	10%	10%	10%	10%	10%	10%	10%	10%	
CS Dividends	44,380	46,155	44,876	40,358	41,973	43,652	45,398	47,214	58,067	412,072
Gasprom CS Dividends	4,234	4,403	4,281	3,850	4,004	4,164	4,331	4,504	5,540	39,311
Gasprom CS Dividends	4,234	4,403	4,281	3,850	4,004	4,164	4,331	4,504	5,540	39,311
Plus: Gasprom Transport Marginal Profit	-	-	-	-	-	-	-	-	-	-
Less: Gasprom Equity	-	-	-	-	-	-	-	-	-	35,874
Gasprom Net Cash Flow	4,234	4,403	4,281	3,850	4,004	4,164	4,331	4,504	5,540	3,437
Real Gasprom Net Cash Flow	2,670	2,670	2,496	2,159	2,159	2,159	2,159	2,159	2,553	(12,045)
Gasprom Real Return on Equity										
FOREIGN INVESTOR RETURNS										
Foreign Share of Common Stock	71%	71%	71%	71%	71%	71%	71%	71%	71%	
CS Dividends	44,380	46,155	44,876	40,358	41,973	43,652	45,398	47,214	58,067	412,072
Foreign CS Dividends	31,678	32,946	32,033	28,808	29,960	31,159	32,405	33,701	41,449	294,139
Foreign CS Dividends	31,678	32,946	32,033	28,808	29,960	31,159	32,405	33,701	41,449	294,139
Less: Foreign Equity	-	-	-	-	-	-	-	-	-	107,621
Less: Additional Equity Investment	-	-	-	-	-	-	-	-	-	160,799
Foreign Net Cash Flow	31,678	32,946	32,033	28,808	29,960	31,159	32,405	33,701	41,449	25,720
Real Foreign Cash Flow	19,979	19,979	18,679	16,152	16,152	16,152	16,152	16,152	19,101	(68,781)
Foreign Real Return on Equity										

SIBERIAN GAS PROCESSING PLANT
Data and Key Results

TIMING DATA

Cost Estimate Month	Oct 93	First, Last Operation Month	Jan 96 Dec 15
Financial Closing Month	Jan 95	Economic Life	20.00

ENGINEERING DATA

	1994	1995	1996	1997	1998	1999	2000	2001
Rated Capacity (BCM/yr)in 1996, 1998	2.14	4.28						
Stream Factor		-	100%	100%	100%	100%	100%	100%
Operations Partial Year Factor	-	-	1.000	1.000	1.000	100%	100%	100%
Wet Gas Processed (MCM)	-	-	2.14	2.14	4.28	4.28	4.28	4.28
Dry Gas Production (BCM)	-	-	1.80	1.91	3.76	3.76	3.76	3.76
NGL Production (MMTons)	-	-	0.36	0.49	1.07	1.07	1.07	1.07

REVENUE DATA (1996 $'s)

NGL Domestic Price ($/Ton)	84.82	Domestic Gas Price ($/MCM)	17.09
NGL Export Price ($/Ton)	180.00	Export Gas Price ($/MCM)	90.00
% NGL for Export	-	% Dry Gas for Export	-

OPERATING COST DATA (1993 $000's)

			TRANSPORT COSTS (1996 $'s)	DOM	EXP
Wet Gas Feedstock Cost ($/MCM)	-		Dry Gas In-Russia Costs ($/MCM)	-	40.00
Chemicals Cost	382		Dry Gas Export Costs		32.00
Utility Cost	19,432		NGL In-Russia Costs ($/Ton)	1.94	36.55
Maintenance Cost	985		NGL Pipeline Costs	43.52	43.52
Labor Cost, Benefits	1,364	518	NGL Port Loading Charge		1.62
Other Expenses	10,134		NGL Shipping Cost		15.10

CAPITAL COST DATA (1993 $000's)

	1995	1996	1997	Total
Gubkinsky GPP Expansion	43,700	157,500	90,300	291,500
Tarasovsky Gas Processing Plant	-	-	-	-
Gas Gathering Systems Cost	17,900	53,700	40,200	111,800
Metering Facilities Cost	440	1,290	970	2,700
Contributed Assets	9,841	22,495	11,943	44,279
Other Owners Costs	8,000	-	-	8,000
Infrastructure Costs	9,306	31,874	19,721	60,900
Initial Working Capital	2,839	-	-	2,839
Capital Costs	92,026	266,859	163,133	522,018

WORKING CAPITAL DATA

Days Receivables	45
Days Payables	45

FINANCING DATA

	WB/Other Loan	
% of Permanent Financing	70%	
Loan Amount, Commitment	421,254	421,255
Loan Interest Rate	8.15%	
Start of Repayment, Repayment Period	Jan 98	9.0
Commitment Fees %	0.25%	
Upfront Fee %	-	
Other Fin Fees & Close Costs (%, Amt)	-	

KEY RESULTS SUMMARY

Real Return on Investment (no taxes)	12.0%
Unleveraged Payback (Yrs)	5.7
Nominal NPV (Oct '93) @ 15.0%	17,370
Real Return on Equity	9.2%
Leveraged Payback (Yrs)	9.0
Nominal NPV (Oct '93) @ 15.0%	(21,956)
Min Debt Service Coverage	103%
Average Debt Service Coverage	135%

FINANCING DATA (cont'd)

	Actual
Required Reserves (1st Operating Yr)	39,374
Cash Flow Dedicated to Reserves	100%
Reinvestment Rate	3.0%

TAX DATA

Tax & Book In Service Month	Jan 96
Profits Tax	32.00%
15% Yr SL Property %	100.0%
Carryforward Years	5
VAT Tax (% of CapEx)	20.0%
Property Tax (% of Fixed Assets)	-
Road Tax (% of Revenues)	0.4%
Dry Gas Export Tariff ('93 $/MCM)	-
NGL Export Tariff ('93 $/Ton)	-

ECONOMIC DATA

Global Inflation Rate	2.8% **
Capital Cost Esc Rate	2.8%
O&M Esc Rate	2.8%
Export Gas Price Esc Rate	2.8%
Domestic Gas Price Esc Rate	2.8%
Export NGL Price Esc Rate	2.8%
Domestic NGL Price Esc Rate	2.8%

** Until 2000, 4% thereafter
(all escalation equivalent to inflation)

SENSITIVITY ANALYSIS FACTORS

O&M Cost	1.00
Gas Price	1.00
NGL Price	1.25
Capital Cost	1.00
Transport Cost	1.00
Wet Gas Price	1.00

099 1886

SIBERIAN GAS PROCESSING PLANT
Annual Sources and Uses of Funds During Construction

($US Thousands)

	1995	1996	1997	Total	%
SOURCES OF FUNDS					
World Bank/Other Loan	68,888	207,943	144,423	421,254	70%
SIBNG Cash Equity	-	-	-	-	-
PNG Cash Equity	-	-	-	-	-
Gasprom Cash Equity	4,921	11,248	5,971	22,140	4%
SIBNG Equity	4,921	11,248	5,971	22,140	4%
PNG Equity	4,921	11,248	5,971	22,140	4%
Foreign Equity	14,762	33,743	17,914	66,419	11%
JV Operating Cash Flow	-	21,633	26,067	47,699	8%
Total Sources of Funds	98,412	297,062	206,318	601,792	100%
USES OF FUNDS					
Gubkinsky GPP Expansion	45,950	169,606	99,266	314,821	
Tarasovsky Gas Processing Plant	-	-	-	-	
Gas Gathering Systems Cost	18,820	57,765	44,281	120,866	
Metering Facilities Costs	463	1,388	1,068	2,919	
Infrastructure Costs	9,785	34,314	21,692	65,791	
Contributed Assets	9,841	22,495	11,943	44,279	
Other Owners Costs	8,281	-	-	8,281	
Initial Working Capital	3,000	-	-	3,000	
Capital Costs	96,139	285,567	178,251	559,957	93%
Other Loan Interest	1,260	10,783	27,896	39,939	
Other Loan Commitment Fees	1,012	712	172	1,896	
Upfront Fees	-	-	-	-	
Financing Costs	2,272	11,495	28,068	41,835	7%
Total Uses of Funds	98,412	297,062	206,318	601,792	100%

	$	%
Total Debt	421,254	70%
Operating Cash	47,699	8%
Equity Requirement	132,838	22%
	601,792	100%

MEMORANDA	WB/Other Loan	
Loan Draws, Amount	421,254	
Standby Facility	-	
Constr Loan Draws + Standby, Commitment	421,254	421,255
Constr Loan Int Rate	8.15%	
Commitment Fee Rate	0.25%	
Upfront Fee Rate	-	
Other Financing Fees (%, Amt)	-	
Repayment Period	9.0	

** NOTE: ANNUAL SANDU STATEMENT IS FOR PRESENTATION ONLY. VALUES ARE FROM QUARTERLY CALCULATIONS.

VAT TAX FUNDING				
VAT Tax	15,003	52,614	33,262	100,879
VAT Recovery Expressed in $'s	435	8,945	30,692	40,072
Net VAT Payment	14,569	43,669	2,570	60,807
PNG Cash Equity for VAT	2,428	7,278	428	10,135
SNGP Cash Equity for VAT	2,428	7,278	428	10,135
Gasprom Cash Equity for VAT	2,428	7,278	428	10,135
Foreign Equity for VAT	7,284	21,834	1,285	30,404
Cash Equity for VAT	14,569	43,669	2,570	60,807

Equity Requirement	132,838
Equity for VAT	60,807
Total Equity	193,646

SIBERIAN GASS PROCESSING PLANT
Equity Returns
(Thousands)

	1994	1995	1996	1997	1998	1999	2000	2001	2002	2003	2004	2005	2006
EQUITY INVESTMENT													
SNGP Equity	-	7,349	18,526	6,400	-	-	-	-	-	-	-	-	-
PNG Equity	-	7,349	18,526	6,400	-	-	-	-	-	-	-	-	-
Gasprom Equity	-	7,349	18,526	6,400	-	-	-	-	-	-	-	-	-
Foreign Equity	-	22,046	55,577	19,199	-	-	-	-	-	-	-	-	-
Additional Equity	-	-	-	-	-	-	-	-	-	-	-	-	-
Total Equity	-	44,092	111,155	38,399	-	-	-	-	-	-	-	-	-
CUMULATIVE EQUITY INVESTMENT													
SNGP Equity Holdings	-	7,349	25,875	32,274	32,274	32,274	32,274	32,274	32,274	32,274	32,274	32,274	32,274
PNG Equity Holdings	-	7,349	25,875	32,274	32,274	32,274	32,274	32,274	32,274	32,274	32,274	32,274	32,274
Gasprom Equity Holdings	-	7,349	25,875	32,274	32,274	32,274	32,274	32,274	32,274	32,274	32,274	32,274	32,274
Foreign Equity Holdings	-	22,046	77,624	96,823	96,823	96,823	96,823	96,823	96,823	96,823	96,823	96,823	96,823
CS Equity Position	-	44,092	155,247	193,646	193,646	193,646	193,646	193,646	193,646	193,646	193,646	193,646	193,646
PROJECT RETURN ON EQUITY													
CS Dividends	-	-	-	-	-	-	9,379	16,318	23,209	30,230	32,233	30,268	49,734
Less: Equity Investment	-	44,092	111,155	38,399	-	-	-	-	-	-	-	-	-
Net Cash Flow	-	(44,092)	(111,155)	(38,399)	-	-	9,379	16,318	23,209	30,230	32,233	30,268	49,734
Cumulative	-	(44,092)	(155,247)	(193,646)	(193,646)	(193,646)	(184,266)	(167,949)	(144,740)	(114,509)	(82,277)	(52,008)	(2,274)
Real Net Cash Flow	-	(42,012)	(103,026)	(34,621)	-	-	7,784	13,022	17,809	22,304	22,867	20,648	32,621
Real Return on Equity	9.2%												

1690

101

SIBERIAN GASS PROCESSING PLANT
Equity Returns
(Thousands)

	1994	1995	1996	1997	1998	1999	2000	2001	2002	2003	2004	2005	2006
SNGP RETURNS													
SNGP Share of Common Stock		17%	17%	17%	17%	17%	17%	17%	17%	17%	17%	17%	17%
CS Dividends	-	-	-	-	-	-	9,379	16,318	23,209	30,230	32,233	30,268	49,734
SNGP CS Dividends		-	-	-	-	-	1,563	2,720	3,868	5,038	5,372	5,045	8,289
SNGP CS Dividends		-	-	-	-	-	1,563	2,720	3,868	5,038	5,372	5,045	8,289
Plus: SNGP NGL Pipeline Marginal Profit	-	-	-	-	-	-	-	-	-	-	-	-	-
Less: SNGP Equity	-	7,349	18,526	6,400	-	-	-	-	-	-	-	-	-
SNGP Net Cash Flow	-	(7,349)	(18,526)	(6,400)	-	-	1,563	2,720	3,868	5,038	5,372	5,045	8,289
Real SNGP Net Cash Flow	-	(7,002)	(17,171)	(5,770)	-	-	1,297	2,170	2,968	3,717	3,811	3,441	5,437
SNGP Real Return on Equity	9.2%												
PNG RETURNS													
PNG Share of Common Stock		17%	17%	17%	17%	17%	17%	17%	17%	17%	17%	17%	17%
CS Dividends	-	-	-	-	-	-	9,379	16,318	23,209	30,230	32,233	30,268	49,734
PNG CS Dividends		-	-	-	-	-	1,563	2,720	3,868	5,038	5,372	5,045	8,289
PNG CS Dividends		-	-	-	-	-	1,563	2,720	3,868	5,038	5,372	5,045	8,289
Plus: PNG Wet Gas Marginal Profit	-	-	-	-	-	-	-	-	-	-	-	-	-
Less: PNG Equity	-	7,349	18,526	6,400	-	-	-	-	-	-	-	-	-
PNG Net Cash Flow	-	(7,349)	(18,526)	(6,400)	-	-	1,563	2,720	3,868	5,038	5,372	5,045	8,289
Real PNG Net Cash Flow	-	(7,002)	(17,171)	(5,770)	-	-	1,297	2,170	2,968	3,717	3,811	3,441	5,437
PNG Real Return on Equity	9.2%												
GASPROM RETURNS													
Gasprom Share of Common Stock		17%	17%	17%	17%	17%	17%	17%	17%	17%	17%	17%	17%
CS Dividends	-	-	-	-	-	-	9,379	16,318	23,209	30,230	32,233	30,268	49,734
Gasprom CS Dividends		-	-	-	-	-	1,563	2,720	3,868	5,038	5,372	5,045	8,289
Gasprom CS Dividends		-	-	-	-	-	1,563	2,720	3,868	5,038	5,372	5,045	8,289
Plus: Gasprom Transport Marginal Profit	-	-	-	-	-	-	-	-	-	-	-	-	-
Less: Gasprom Equity	-	7,349	18,526	6,400	-	-	-	-	-	-	-	-	-
Gasprom Net Cash Flow	-	(7,349)	(18,526)	(6,400)	-	-	1,563	2,720	3,868	5,038	5,372	5,045	8,289
Real Gasprom Net Cash Flow	-	(7,002)	(17,171)	(5,770)	-	-	1,297	2,170	2,968	3,717	3,811	3,441	5,437
Gasprom Real Return on Equity	9.2%												
FOREIGN INVESTOR RETURNS													
Foreign Share of Common Stock		50%	50%	50%	50%	50%	50%	50%	50%	50%	50%	50%	50%
CS Dividends	-	-	-	-	-	-	9,379	16,318	23,209	30,230	32,233	30,268	49,734
Foreign CS Dividends		-	-	-	-	-	4,690	8,159	11,605	15,115	16,116	15,134	24,867
Foreign CS Dividends		-	-	-	-	-	4,690	8,159	11,605	15,115	16,116	15,134	24,867
Less: Foreign Equity	-	22,046	55,577	19,199	-	-	-	-	-	-	-	-	-
Less: Additional Equity Investment	-	-	-	-	-	-	-	-	-	-	-	-	-
Foreign Net Cash Flow	-	(22,046)	(55,577)	(19,199)	-	-	4,690	8,159	11,605	15,115	16,116	15,134	24,867
Real Foreign Cash Flow	-	(21,006)	(51,513)	(17,311)	-	-	3,892	6,511	8,904	11,152	11,434	10,324	16,311
Foreign Real Return on Equity	9.2%												

SIBERIAN GASS PROCESSING PLANT
Equity Returns
(Thousands)

	2007	2008	2009	2010	2011	2012	2013	2014	2015	Total
EQUITY INVESTMENT										
SNGP Equity	-	-	-	-	-	-	-	-	-	32,274
PNG Equity	-	-	-	-	-	-	-	-	-	32,274
Gasprom Equity	-	-	-	-	-	-	-	-	-	32,274
Foreign Equity	-	-	-	-	-	-	-	-	-	96,823
Additional Equity	-	-	-	-	-	-	-	-	-	-
Total Equity	-	-	-	-	-	-	-	-	-	193,646
CUMULATIVE EQUITY INVESTMENT										
SNGP Equity Holdings	32,274	32,274	32,274	32,274	32,274	32,274	32,274	32,274	32,274	
PNG Equity Holdings	32,274	32,274	32,274	32,274	32,274	32,274	32,274	32,274	32,274	
Gasprom Equity Holdings	32,274	32,274	32,274	32,274	32,274	32,274	32,274	32,274	32,274	
Foreign Equity Holdings	96,823	96,823	96,823	96,823	96,823	96,823	96,823	96,823	96,823	
CS Equity Position	193,646	193,646	193,646	193,646	193,646	193,646	193,646	193,646	193,646	
PROJECT RETURN ON EQUITY										
CS Dividends	69,614	72,398	75,294	78,306	81,438	84,696	88,084	91,607	112,666	945,475
Less: Equity Investment	-	-	-	-	-	-	-	-	-	193,646
Net Cash Flow	69,614	72,398	75,294	78,306	81,438	84,696	88,084	91,607	112,666	751,829
Cumulative	67,339	139,738	215,032	293,338	374,777	459,473	547,556	639,163	751,829	
Real Net Cash Flow	43,904	43,904	43,904	43,904	43,904	43,904	43,904	43,904	51,920	360,552
Real Return on Equity										

1892

SIBERIAN GASS PROCESSING PLANT
Equity Returns

(Thousands)

	2007	2008	2009	2010	2011	2012	2013	2014	2015	Total
SNGP RETURNS										
SNGP Share of Common Stock	17%	17%	17%	17%	17%	17%	17%	17%	17%	
CS Dividends	69,614	72,398	75,294	78,306	81,438	84,696	88,084	91,607	112,666	945,475
SNGP CS Dividends	11,602	12,066	12,549	13,051	13,573	14,116	14,681	15,268	18,778	157,579
SNGP CS Dividends	11,602	12,066	12,549	13,051	13,573	14,116	14,681	15,268	18,778	157,579
Plus: SNGP NGL Pipeline Marginal Profit	-	-	-	-	-	-	-	-	-	-
Less: SNGP Equity	-	-	-	-	-	-	-	-	-	32,274
SNGP Net Cash Flow	11,602	12,066	12,549	13,051	13,573	14,116	14,681	15,268	18,778	125,305
Real SNGP Net Cash Flow	7,317	7,317	7,317	7,317	7,317	7,317	7,317	7,317	8,653	60,092
SNGP Real Return on Equity										
PNG RETURNS										
PNG Share of Common Stock	17%	17%	17%	17%	17%	17%	17%	17%	17%	
CS Dividends	69,614	72,398	75,294	78,306	81,438	84,696	88,084	91,607	112,666	945,475
PNG CS Dividends	11,602	12,066	12,549	13,051	13,573	14,116	14,681	15,268	18,778	157,579
PNG CS Dividends	11,602	12,066	12,549	13,051	13,573	14,116	14,681	15,268	18,778	157,579
Plus: PNG Wet Gas Marginal Profit	-	-	-	-	-	-	-	-	-	-
Less: PNG Equity	-	-	-	-	-	-	-	-	-	32,274
PNG Net Cash Flow	11,602	12,066	12,549	13,051	13,573	14,116	14,681	15,268	18,778	125,305
Real PNG Net Cash Flow	7,317	7,317	7,317	7,317	7,317	7,317	7,317	7,317	8,653	60,092
PNG Real Return on Equity										
GASPROM RETURNS										
Gasprom Share of Common Stock	17%	17%	17%	17%	17%	17%	17%	17%	17%	
CS Dividends	69,614	72,398	75,294	78,306	81,438	84,696	88,084	91,607	112,666	945,475
Gasprom CS Dividends	11,602	12,066	12,549	13,051	13,573	14,116	14,681	15,268	18,778	157,579
Gasprom CS Dividends	11,602	12,066	12,549	13,051	13,573	14,116	14,681	15,268	18,778	157,579
Plus: Gasprom Transport Marginal Profit	-	-	-	-	-	-	-	-	-	-
Less: Gasprom Equity	-	-	-	-	-	-	-	-	-	32,274
Gasprom Net Cash Flow	11,602	12,066	12,549	13,051	13,573	14,116	14,681	15,268	18,778	125,305
Real Gasprom Net Cash Flow	7,317	7,317	7,317	7,317	7,317	7,317	7,317	7,317	8,653	60,092
Gasprom Real Return on Equity										
FOREIGN INVESTOR RETURNS										
Foreign Share of Common Stock	50%	50%	50%	50%	50%	50%	50%	50%	50%	
CS Dividends	69,614	72,398	75,294	78,306	81,438	84,696	88,084	91,607	112,666	945,475
Foreign CS Dividends	34,807	36,199	37,647	39,153	40,719	42,348	44,042	45,804	56,333	472,737
Foreign CS Dividends	34,807	36,199	37,647	39,153	40,719	42,348	44,042	45,804	56,333	472,737
Less: Foreign Equity	-	-	-	-	-	-	-	-	-	96,823
Less: Additional Equity Investment	-	-	-	-	-	-	-	-	-	-
Foreign Net Cash Flow	34,807	36,199	37,647	39,153	40,719	42,348	44,042	45,804	56,333	375,915
Real Foreign Cash Flow	21,952	21,952	21,952	21,952	21,952	21,952	21,952	21,952	25,960	180,276
Foreign Real Return on Equity										

SIBERIAN GAS PROCESSING PLANT
Data and Key Results

TIMING DATA

Cost Estimate Month	Oct 93	First, Last Operation Month	Jan 96 Dec 15
Financial Closing Month	Jan 95	Economic Life	20.00

ENGINEERING DATA

	1994	1995	1996	1997	1998	1999	2000	2001
Rated Capacity (BCM/yr)in 1996, 1998	2.14	4.28						
Stream Factor		-	100%	100%	100%	100%	100%	100%
Operations Partial Year Factor	-	-	1.000	1.000	1.000	100%	100%	100%
Wet Gas Processed (MCM)	-	-	2.14	2.14	4.28	4.28	4.28	4.28
Dry Gas Production (BCM)	-	-	1.80	1.91	3.76	3.76	3.76	3.76
NGL Production (MMTons)	-	-	0.36	0.49	1.07	1.07	1.07	1.07

REVENUE DATA (1996 $'s)

NGL Domestic Price ($/Ton)	50.89	Domestic Gas Price ($/MCM)	17.09
NGL Export Price ($/Ton)	108.00	Export Gas Price ($/MCM)	90.00
% NGL for Export	-	% Dry Gas for Export	-

OPERATING COST DATA (1993 $000's)

				DOM	EXP
Wet Gas Feedstock Cost ($/MCM)	-		Dry Gas In-Russia Costs ($/MCM)	-	40.00
Chemicals Cost	382		Dry Gas Export Costs		32.00
Utility Cost	19,432		NGL In-Russia Costs ($/Ton)	1.94	36.55
Maintenance Cost	985		NGL Pipeline Costs	43.52	43.52
Labor Cost, Benefits	1,364	518	NGL Port Loading Charge		1.62
Other Expenses	10,134		NGL Shipping Cost		15.10

CAPITAL COST DATA (1993 $000's)

	1995	1996	1997	Total
Gubkinsky GPP Expansion	43,700	157,500	90,300	291,500
Tarasovsky Gas Processing Plant	-	-	-	-
Gas Gathering Systems Cost	17,900	53,700	40,200	111,800
Metering Facilities Cost	440	1,290	970	2,700
Contributed Assets	9,843	25,039	15,991	50,872
Other Owners Costs	8,000	-	-	8,000
Infrastructure Costs	9,306	31,874	19,721	60,900
Initial Working Capital	2,839	-	-	2,839
Capital Costs	92,027	269,402	167,182	528,611

WORKING CAPITAL DATA

Days Receivables	45
Days Payables	45

FINANCING DATA

	WB/Other Loan	
% of Permanent Financing	70%	
Loan Amount, Commitment	426,089	426,090
Loan Interest Rate	8.15%	
Start of Repayment, Repayment Period	Jan 98	9.0
Commitment Fees %	0.25%	
Upfront Fee %	-	
Other Fin Fees & Close Costs (%, Amt)	-	

KEY RESULTS SUMMARY

Real Return on Investment (no taxes)	2.5%
Unleveraged Payback (Yrs)	11.1
Nominal NPV (Oct '93) @ 15.0%	(154099)
Real Return on Equity	(3.6%)
Leveraged Payback (Yrs)	-
Nominal NPV (Oct '93) @ 15.0%	(161744)
Min Debt Service Coverage	57%
Average Debt Service Coverage	70%

FINANCING DATA (cont'd)

	Actual
Required Reserves (1st Operating Yr)	39,826
Cash Flow Dedicated to Reserves	100%
Reinvestment Rate	3.0%

TAX DATA

Tax & Book In Service Month	Jan 96
Profits Tax	32.00%
15% Yr SL Property %	100.0%
Carryforward Years	5
VAT Tax (% of CapEx)	20.0%
Property Tax (% of Fixed Assets)	-
Road Tax (% of Revenues)	0.4%
Dry Gas Export Tariff ('93 $/MCM)	-
NGL Export Tariff ('93 $/Ton)	-

ECONOMIC DATA

Global Inflation Rate	2.8% **
Capital Cost Esc Rate	2.8%
O&M Esc Rate	2.8%
Export Gas Price Esc Rate	2.8%
Domestic Gas Price Esc Rate	2.8%
Export NGL Price Esc Rate	2.8%
Domestic NGL Price Esc Rate	2.8%

** Until 2000, 4% thereafter
(all escalation equivalent to inflation)

SENSITIVITY ANALYSIS FACTORS

O&M Cost	1.00
Gas Price	1.00
NGL Price	0.75
Capital Cost	1.00
Transport Cost	1.00
Wet Gas Price	1.00

1896

SIBERIAN GAS PROCESSING PLANT
Annual Sources and Uses of Funds During Construction

($US Thousands)

	1995	1996	1997	Total	%
SOURCES OF FUNDS					
World Bank/Other Loan	68,898	209,769	147,423	426,089	70%
SIBNG Cash Equity	-	-	-	-	-
PNG Cash Equity	-	-	-	-	-
Gasprom Cash Equity	4,921	12,519	7,996	25,436	4%
SIBNG Equity	4,921	12,519	7,996	25,436	4%
PNG Equity	4,921	12,519	7,996	25,436	4%
Foreign Equity	14,764	37,558	23,987	76,308	13%
JV Operating Cash Flow	-	14,785	15,208	29,993	5%
Total Sources of Funds	98,425	299,670	210,604	608,699	100%
USES OF FUNDS					
Gubkinsky GPP Expansion	45,950	169,606	99,266	314,821	
Tarasovsky Gas Processing Plant	-	-	-	-	
Gas Gathering Systems Cost	18,820	57,765	44,281	120,866	
Metering Facilities Costs	463	1,388	1,068	2,919	
Infrastructure Costs	9,785	34,314	21,692	65,791	
Contributed Assets	9,843	25,039	15,991	50,872	
Other Owners Costs	8,281	-	-	8,281	
Initial Working Capital	3,000	-	-	3,000	
Capital Costs	96,140	288,110	182,299	566,549	93%
Other Loan Interest	1,260	10,837	28,129	40,227	
Other Loan Commitment Fees	1,024	722	176	1,923	
Upfront Fees	-	-	-	-	
Financing Costs	2,285	11,560	28,305	42,150	7%
Total Uses of Funds	98,425	299,670	210,604	608,699	100%

	$	%
Total Debt	426,089	70%
Operating Cash	29,993	5%
Equity Requirement	152,617	25%
	608,699	100%

MEMORANDA	WB/Other Loan	
Loan Draws, Amount	426,089	
Standby Facility	-	
Constr Loan Draws + Standby, Commitment	426,089	426,090
Constr Loan Int Rate	8.15%	
Commitment Fee Rate	0.25%	
Upfront Fee Rate	-	
Other Financing Fees (%, Amt)	-	
Repayment Period	9.0	

** NOTE: ANNUAL SANDU STATEMENT IS FOR PRESENTATION ONLY. VALUES ARE FROM QUARTERLY CALCULATIONS.

VAT TAX FUNDING				
VAT Tax	15,003	52,614	33,262	100,879
VAT Recovery Expressed in $'s	435	8,945	30,692	40,072
Net VAT Payment	14,569	43,669	2,570	60,807
PNG Cash Equity for VAT	2,428	7,278	428	10,135
SNGP Cash Equity for VAT	2,428	7,278	428	10,135
Gasprom Cash Equity for VAT	2,428	7,278	428	10,135
Foreign Equity for VAT	7,284	21,834	1,285	30,404
Cash Equity for VAT	14,569	43,669	2,570	60,807

Equity Requirement	152,617
Equity for VAT	60,807
Total Equity	213,424

SIBERIAN GASS PROCESSING PLANT
Equity Returns

(Thousands)

	1994	1995	1996	1997	1998	1999	2000	2001	2002	2003	2004	2005	2006
EQUITY INVESTMENT													
SNGP Equity	-	7,349	19,797	8,424	-	-	-	-	-	-	-	-	-
PNG Equity	-	7,349	19,797	8,424	-	-	-	-	-	-	-	-	-
Gasprom Equity	-	7,349	19,797	8,424	-	-	-	-	-	-	-	-	-
Foreign Equity	-	22,048	59,392	25,271	-	-	-	-	-	-	-	-	-
Additional Equity	-	-	-	-	34,274	16,873	23,497	28,927	23,601	18,213	12,758	13,688	8,991
Total Equity	-	44,096	118,785	50,543	34,274	16,873	23,497	28,927	23,601	18,213	12,758	13,688	8,991
CUMULATIVE EQUITY INVESTMENT													
SNGP Equity Holdings	-	7,349	27,147	35,571	35,571	35,571	35,571	35,571	35,571	35,571	35,571	35,571	35,571
PNG Equity Holdings	-	7,349	27,147	35,571	35,571	35,571	35,571	35,571	35,571	35,571	35,571	35,571	35,571
Gasprom Equity Holdings	-	7,349	27,147	35,571	35,571	35,571	35,571	35,571	35,571	35,571	35,571	35,571	35,571
Foreign Equity Holdings	-	22,048	81,441	106,712	140,986	157,859	181,356	210,283	233,884	252,096	264,855	278,543	287,534
CS Equity Position	-	44,096	162,881	213,424	247,698	264,571	288,068	316,995	340,596	358,808	371,567	385,255	394,246
PROJECT RETURN ON EQUITY													
CS Dividends	-	-	-	-	-	-	-	-	-	-	-	-	-
Less: Equity Investment	-	44,096	118,785	50,543	34,274	16,873	23,497	28,927	23,601	18,213	12,758	13,688	8,991
Net Cash Flow	-	(44,096)	(118,785)	(50,543)	(34,274)	(16,873)	(23,497)	(28,927)	(23,601)	(18,213)	(12,758)	(13,688)	(8,991)
Cumulative	-	(44,096)	(162,881)	(213,424)	(247,698)	(264,571)	(288,068)	(316,995)	(340,596)	(358,808)	(371,567)	(385,255)	(394,246)
Real Net Cash Flow	-	(42,016)	(110,098)	(45,571)	(30,061)	(14,396)	(19,501)	(23,084)	(18,110)	(13,438)	(9,051)	(9,337)	(5,897)
Real Return on Equity	(3.6%)												

1896

SIBERIAN GASS PROCESSING PLANT
Equity Returns
(Thousands)

	1994	1995	1996	1997	1998	1999	2000	2001	2002	2003	2004	2005	2006
SNGP RETURNS													
SNGP Share of Common Stock		17%	17%	17%	14%	13%	12%	11%	10%	10%	10%	9%	9%
CS Dividends	-	-	-	-	-	-	-	-	-	-	-	-	-
SNGP CS Dividends		-	-	-	-	-	-	-	-	-	-	-	-
SNGP CS Dividends		-	-	-	-	-	-	-	-	-	-	-	-
Plus: SNGP NGL Pipeline Marginal Profit	-	-	-	-	-	-	-	-	-	-	-	-	-
Less: SNGP Equity	-	7,349	19,797	8,424	-	-	-	-	-	-	-	-	-
SNGP Net Cash Flow	-	(7,349)	(19,797)	(8,424)	-	-	-	-	-	-	-	-	-
Real SNGP Net Cash Flow	-	(7,003)	(18,350)	(7,595)	-	-	-	-	-	-	-	-	-
SNGP Real Return on Equity	#ARITH												
PNG RETURNS													
PNG Share of Common Stock		17%	17%	17%	14%	13%	12%	11%	10%	10%	10%	9%	9%
CS Dividends	-	-	-	-	-	-	-	-	-	-	-	-	-
PNG CS Dividends		-	-	-	-	-	-	-	-	-	-	-	-
PNG CS Dividends		-	-	-	-	-	-	-	-	-	-	-	-
Plus: PNG Wet Gas Marginal Profit	-	-	-	-	-	-	-	-	-	-	-	-	-
Less: PNG Equity	-	7,349	19,797	8,424	-	-	-	-	-	-	-	-	-
PNG Net Cash Flow	-	(7,349)	(19,797)	(8,424)	-	-	-	-	-	-	-	-	-
Real PNG Net Cash Flow	-	(7,003)	(18,350)	(7,595)	-	-	-	-	-	-	-	-	-
PNG Real Return on Equity	(3.6%)												
GASPROM RETURNS													
Gasprom Share of Common Stock		17%	17%	17%	14%	13%	12%	11%	10%	10%	10%	9%	9%
CS Dividends	-	-	-	-	-	-	-	-	-	-	-	-	-
Gasprom CS Dividends		-	-	-	-	-	-	-	-	-	-	-	-
Gasprom CS Dividends		-	-	-	-	-	-	-	-	-	-	-	-
Plus: Gasprom Transport Marginal Profit	-	-	-	-	-	-	-	-	-	-	-	-	-
Less: Gasprom Equity	-	7,349	19,797	8,424	-	-	-	-	-	-	-	-	-
Gasprom Net Cash Flow	-	(7,349)	(19,797)	(8,424)	-	-	-	-	-	-	-	-	-
Real Gasprom Net Cash Flow	-	(7,003)	(18,350)	(7,595)	-	-	-	-	-	-	-	-	-
Gasprom Real Return on Equity	#ARITH												
FOREIGN INVESTOR RETURNS													
Foreign Share of Common Stock		50%	50%	50%	57%	60%	63%	66%	69%	70%	71%	72%	73%
CS Dividends	-	-	-	-	-	-	-	-	-	-	-	-	-
Foreign CS Dividends		-	-	-	-	-	-	-	-	-	-	-	-
Foreign CS Dividends		-	-	-	-	-	-	-	-	-	-	-	-
Less: Foreign Equity	-	22,048	59,392	25,271	-	-	-	-	-	-	-	-	-
Less: Additional Equity Investment	-	-	-	-	34,274	16,873	23,497	28,927	23,601	18,213	12,758	13,688	8,991
Foreign Net Cash Flow	-	(22,048)	(59,392)	(25,271)	(34,274)	(16,873)	(23,497)	(28,927)	(23,601)	(18,213)	(12,758)	(13,688)	(8,991)
Real Foreign Cash Flow	-	(21,008)	(55,049)	(22,785)	(30,061)	(14,396)	(19,501)	(23,084)	(18,110)	(13,438)	(9,051)	(9,337)	(5,897)
Foreign Real Return on Equity	(3.7%)												

SIBERIAN GASS PROCESSING PLANT
Equity Returns

(Thousands)

	2007	2008	2009	2010	2011	2012	2013	2014	2015	Total
EQUITY INVESTMENT										
SNGP Equity	-	-	-	-	-	-	-	-	-	35,571
PNG Equity	-	-	-	-	-	-	-	-	-	35,571
Gasprom Equity	-	-	-	-	-	-	-	-	-	35,571
Foreign Equity	-	-	-	-	-	-	-	-	-	106,712
Additional Equity	-	-	-	-	-	-	-	-	-	180,822
Total Equity	-	-	-	-	-	-	-	-	-	394,246
CUMULATIVE EQUITY INVESTMENT										
SNGP Equity Holdings	35,571	35,571	35,571	35,571	35,571	35,571	35,571	35,571	35,571	
PNG Equity Holdings	35,571	35,571	35,571	35,571	35,571	35,571	35,571	35,571	35,571	
Gasprom Equity Holdings	35,571	35,571	35,571	35,571	35,571	35,571	35,571	35,571	35,571	
Foreign Equity Holdings	287,534	287,534	287,534	287,534	287,534	287,534	287,534	287,534	287,534	
CS Equity Position	394,246	394,246	394,246	394,246	394,246	394,246	394,246	394,246	394,246	
PROJECT RETURN ON EQUITY										
CS Dividends	41,932	43,609	45,353	39,663	39,657	41,244	42,893	44,609	54,864	393,825
Less: Equity Investment	-	-	-	-	-	-	-	-	-	394,246
Net Cash Flow	41,932	43,609	45,353	39,663	39,657	41,244	42,893	44,609	54,864	(421)
Cumulative	(352,314)	(308,705)	(263,352)	(223,689)	(184,031)	(142,788)	(99,894)	(55,285)	(421)	
Real Net Cash Flow	26,446	26,446	26,446	22,238	21,380	21,380	21,380	21,380	25,283	(128,181)
Real Return on Equity										

SIBERIAN GASS PROCESSING PLANT
Equity Returns
(Thousands)

	2007	2008	2009	2010	2011	2012	2013	2014	2015	Total
SNGP RETURNS										
SNGP Share of Common Stock	9%	9%	9%	9%	9%	9%	9%	9%	9%	
CS Dividends	41,932	43,609	45,353	39,663	39,657	41,244	42,893	44,609	54,864	393,825
SNGP CS Dividends	3,783	3,935	4,092	3,579	3,578	3,721	3,870	4,025	4,950	35,533
SNGP CS Dividends	3,783	3,935	4,092	3,579	3,578	3,721	3,870	4,025	4,950	35,533
Plus: SNGP NGL Pipeline Marginal Profit	-	-	-	-	-	-	-	-	-	-
Less: SNGP Equity	-	-	-	-	-	-	-	-	-	35,571
SNGP Net Cash Flow	3,783	3,935	4,092	3,579	3,578	3,721	3,870	4,025	4,950	(38)
Real SNGP Net Cash Flow	2,386	2,386	2,386	2,006	1,929	1,929	1,929	1,929	2,281	(13,786)
SNGP Real Return on Equity										
PNG RETURNS										
PNG Share of Common Stock	9%	9%	9%	9%	9%	9%	9%	9%	9%	
CS Dividends	41,932	43,609	45,353	39,663	39,657	41,244	42,893	44,609	54,864	393,825
PNG CS Dividends	3,783	3,935	4,092	3,579	3,578	3,721	3,870	4,025	4,950	35,533
PNG CS Dividends	3,783	3,935	4,092	3,579	3,578	3,721	3,870	4,025	4,950	35,533
Plus: PNG Wet Gas Marginal Profit	-	-	-	-	-	-	-	-	-	-
Less: PNG Equity	-	-	-	-	-	-	-	-	-	35,571
PNG Net Cash Flow	3,783	3,935	4,092	3,579	3,578	3,721	3,870	4,025	4,950	(38)
Real PNG Net Cash Flow	2,386	2,386	2,386	2,006	1,929	1,929	1,929	1,929	2,281	(13,786)
PNG Real Return on Equity										
GASPROM RETURNS										
Gasprom Share of Common Stock	9%	9%	9%	9%	9%	9%	9%	9%	9%	
CS Dividends	41,932	43,609	45,353	39,663	39,657	41,244	42,893	44,609	54,864	393,825
Gasprom CS Dividends	3,783	3,935	4,092	3,579	3,578	3,721	3,870	4,025	4,950	35,533
Gasprom CS Dividends	3,783	3,935	4,092	3,579	3,578	3,721	3,870	4,025	4,950	35,533
Plus: Gasprom Transport Marginal Profit	-	-	-	-	-	-	-	-	-	-
Less: Gasprom Equity	-	-	-	-	-	-	-	-	-	35,571
Gasprom Net Cash Flow	3,783	3,935	4,092	3,579	3,578	3,721	3,870	4,025	4,950	(38)
Real Gasprom Net Cash Flow	2,386	2,386	2,386	2,006	1,929	1,929	1,929	1,929	2,281	(13,786)
Gasprom Real Return on Equity										
FOREIGN INVESTOR RETURNS										
Foreign Share of Common Stock	73%	73%	73%	73%	73%	73%	73%	73%	73%	
CS Dividends	41,932	43,609	45,353	39,663	39,657	41,244	42,893	44,609	54,864	393,825
Foreign CS Dividends	30,582	31,805	33,077	28,928	28,923	30,080	31,283	32,535	40,014	287,227
Foreign CS Dividends	30,582	31,805	33,077	28,928	28,923	30,080	31,283	32,535	40,014	287,227
Less: Foreign Equity	-	-	-	-	-	-	-	-	-	106,712
Less: Additional Equity Investment	-	-	-	-	-	-	-	-	-	180,822
Foreign Net Cash Flow	30,582	31,805	33,077	28,928	28,923	30,080	31,283	32,535	40,014	(307)
Real Foreign Cash Flow	19,288	19,288	19,288	16,219	15,593	15,593	15,593	15,593	18,440	(86,824)
Foreign Real Return on Equity										

SIBERIAN GAS PROCESSING PLANT
Data and Key Results

TIMING DATA

Cost Estimate Month	Oct 93	First, Last Operation Month	Jan 96	Dec 15
Financial Closing Month	Jan 95	Economic Life	20.00	

ENGINEERING DATA

	1994	1995	1996	1997	1998	1999	2000	2001
Rated Capacity (BCM/yr)in 1996, 1998	2.14	4.28						
Stream Factor		-	100%	100%	100%	100%	100%	100%
Operations Partial Year Factor	-	-	1.000	1.000	1.000	100%	100%	100%
Wet Gas Processed (MCM)	-	-	2.14	2.14	4.28	4.28	4.28	4.28
Dry Gas Production (BCM)	-	-	1.80	1.91	3.76	3.76	3.76	3.76
NGL Production (MMTons)	-	-	0.36	0.49	1.07	1.07	1.07	1.07

REVENUE DATA (1996 $'s)

NGL Domestic Price ($/Ton)	67.86	Domestic Gas Price ($/MCM)	17.09
NGL Export Price ($/Ton)	144.00	Export Gas Price ($/MCM)	90.00
% NGL for Export	-	% Dry Gas for Export	100%

OPERATING COST DATA (1993 $000's)

Wet Gas Feedstock Cost ($/MCM)	-	
Chemicals Cost	382	
Utility Cost	19,432	
Maintenance Cost	985	
Labor Cost, Benefits	1,364	518
Other Expenses	10,134	

TRANSPORT COSTS (1996 $'s)

	DOM	EXP
Dry Gas In-Russia Costs ($/MCM)	-	40.00
Dry Gas Export Costs		32.00
NGL In-Russia Costs ($/Ton)	1.94	36.55
NGL Pipeline Costs	43.52	43.52
NGL Port Loading Charge		1.62
NGL Shipping Cost		15.10

CAPITAL COST DATA (1993 $000's)

	1995	1996	1997	Total
Gubkinsky GPP Expansion	43,700	157,500	90,300	291,500
Tarasovsky Gas Processing Plant	-	-	-	-
Gas Gathering Systems Cost	17,900	53,700	40,200	111,800
Metering Facilities Cost	440	1,290	970	2,700
Contributed Assets	9,842	23,503	13,662	47,006
Other Owners Costs	8,000	-	-	8,000
Infrastructure Costs	9,306	31,874	19,721	60,900
Initial Working Capital	2,839	-	-	2,839
Capital Costs	92,027	267,867	164,852	524,745

WORKING CAPITAL DATA

Days Receivables	45
Days Payables	45

FINANCING DATA

	WB/Other	Loan
% of Permanent Financing	70%	
Loan Amount, Commitment	423,253	423,255
Loan Interest Rate	8.15%	
Start of Repayment, Repayment Period	Jan 98	9.0
Commitment Fees %	0.25%	
Upfront Fee %	-	
Other Fin Fees & Close Costs (%, Amt)	-	

KEY RESULTS SUMMARY

Real Return on Investment (no taxes)	8.5%
Unleveraged Payback (Yrs)	7.2
Nominal NPV (Oct '93) @ 15.0%	(51,543)
Real Return on Equity	4.1%
Leveraged Payback (Yrs)	11.8
Nominal NPV (Oct '93) @ 15.0%	(79,737)
Min Debt Service Coverage	83%
Average Debt Service Coverage	108%

FINANCING DATA (cont'd)

	Actual
Required Reserves (1st Operating Yr)	39,561
Cash Flow Dedicated to Reserves	100%
Reinvestment Rate	3.0%

TAX DATA

Tax & Book In Service Month	Jan 96
Profits Tax	32.00%
15% Yr SL Property %	100.0%
Carryforward Years	5
VAT Tax (% of CapEx)	20.0%
Property Tax (% of Fixed Assets)	-
Road Tax (% of Revenues)	0.4%
Dry Gas Export Tariff ('93 $/MCM)	-
NGL Export Tariff ('93 $/Ton)	-

ECONOMIC DATA

Global Inflation Rate	2.8% **
Capital Cost Esc Rate	2.8%
O&M Esc Rate	2.8%
Export Gas Price Esc Rate	2.8%
Domestic Gas Price Esc Rate	2.8%
Export NGL Price Esc Rate	2.8%
Domestic NGL Price Esc Rate	2.8%

** Until 2000, 4% thereafter
(all escalation equivalent to inflation)

SENSITIVITY ANALYSIS FACTORS

O&M Cost	1.00
Gas Price	1.00
NGL Price	1.00
Capital Cost	1.00
Transport Cost	1.00
Wet Gas Price	1.00

1700
111

SIBERIAN GAS PROCESSING PLANT
Annual Sources and Uses of Funds During Construction

($US Thousands)

	1995	1996	1997	Total	%
SOURCES OF FUNDS					
World Bank/Other Loan	68,892	208,667	145,694	423,253	70%
SIBNG Cash Equity	-	-	-	-	-
PNG Cash Equity	-	-	-	-	-
Gasprom Cash Equity	4,921	11,752	6,831	23,503	4%
SIBNG Equity	4,921	11,752	6,831	23,503	4%
PNG Equity	4,921	11,752	6,831	23,503	4%
Foreign Equity	14,763	35,255	20,492	70,510	12%
JV Operating Cash Flow	-	18,919	21,455	40,374	7%
Total Sources of Funds	98,417	298,095	208,134	604,647	100%
USES OF FUNDS					
Gubkinsky GPP Expansion	45,950	169,606	99,266	314,821	
Tarasovsky Gas Processing Plant	-	-	-	-	
Gas Gathering Systems Cost	18,820	57,765	44,281	120,866	
Metering Facilities Costs	463	1,388	1,068	2,919	
Infrastructure Costs	9,785	34,314	21,692	65,791	
Contributed Assets	9,842	23,503	13,662	47,006	
Other Owners Costs	8,281	-	-	8,281	
Initial Working Capital	3,000	-	-	3,000	
Capital Costs	96,140	286,575	179,969	562,684	93%
Other Loan Interest	1,260	10,805	27,991	40,056	
Other Loan Commitment Fees	1,017	716	174	1,907	
Upfront Fees	-	-	-	-	
Financing Costs	2,278	11,521	28,164	41,963	7%
Total Uses of Funds	98,417	298,095	208,134	604,647	100%

	$	%
Total Debt	423,253	70%
Operating Cash	40,374	7%
Equity Requirement	141,020	23%
	604,647	100%

MEMORANDA	WB/Other Loan	
Loan Draws, Amount	423,253	
Standby Facility	-	
Constr Loan Draws + Standby, Commitment	423,253	423,255
Constr Loan Int Rate	8.15%	
Commitment Fee Rate	0.25%	
Upfront Fee Rate	-	
Other Financing Fees (%, Amt)	-	
Repayment Period	9.0	

** NOTE: ANNUAL SANDU STATEMENT IS FOR PRESENTATION ONLY. VALUES ARE FROM QUARTERLY CALCULATIONS.

VAT TAX FUNDING				
VAT Tax	15,003	52,614	33,262	100,879
VAT Recovery Expressed in $'s	435	8,945	30,692	40,072
Net VAT Payment	14,569	43,669	2,570	60,807
PNG Cash Equity for VAT	2,428	7,278	428	10,135
SNGP Cash Equity for VAT	2,428	7,278	428	10,135
Gasprom Cash Equity for VAT	2,428	7,278	428	10,135
Foreign Equity for VAT	7,284	21,834	1,285	30,404
Cash Equity for VAT	14,569	43,669	2,570	60,807

Equity Requirement	141,020
Equity for VAT	60,807
Total Equity	201,827

SIBERIAN GASS PROCESSING PLANT
Equity Returns

(Thousands)

	1994	1995	1996	1997	1998	1999	2000	2001	2002	2003	2004	2005	2006
EQUITY INVESTMENT													
SNGP Equity	-	7,349	19,030	7,259	-	-	-	-	-	-	-	-	-
PNG Equity	-	7,349	19,030	7,259	-	-	-	-	-	-	-	-	-
Gasprom Equity	-	7,349	19,030	7,259	-	-	-	-	-	-	-	-	-
Foreign Equity	-	22,047	57,089	21,777	-	-	-	-	-	-	-	-	-
Additional Equity	-	-	-	-	13,712	-	-	-	-	-	-	-	-
Total Equity	-	44,094	114,179	43,554	13,712	-	-	-	-	-	-	-	-
CUMULATIVE EQUITY INVESTMENT													
SNGP Equity Holdings	-	7,349	26,379	33,638	33,638	33,638	33,638	33,638	33,638	33,638	33,638	33,638	33,638
PNG Equity Holdings	-	7,349	26,379	33,638	33,638	33,638	33,638	33,638	33,638	33,638	33,638	33,638	33,638
Gasprom Equity Holdings	-	7,349	26,379	33,638	33,638	33,638	33,638	33,638	33,638	33,638	33,638	33,638	33,638
Foreign Equity Holdings	-	22,047	79,136	100,914	114,626	114,626	114,626	114,626	114,626	114,626	114,626	114,626	114,626
CS Equity Position	-	44,094	158,273	201,827	215,539	215,539	215,539	215,539	215,539	215,539	215,539	215,539	215,539
PROJECT RETURN ON EQUITY													
CS Dividends	-	-	-	-	-	-	-	-	-	-	-	7,867	40,641
Less: Equity Investment	-	44,094	114,179	43,554	13,712	-	-	-	-	-	-	-	-
Net Cash Flow	-	(44,094)	(114,179)	(43,554)	(13,712)	-	-	-	-	-	-	7,867	40,641
Cumulative	-	(44,094)	(158,273)	(201,827)	(215,539)	(215,539)	(215,539)	(215,539)	(215,539)	(215,539)	(215,539)	(207,672)	(167,031)
Real Net Cash Flow	-	(42,014)	(105,829)	(39,270)	(12,026)	-	-	-	-	-	-	5,366	26,657
Real Return on Equity	4.1%												

1704

113

SIBERIAN GASS PROCESSING PLANT
Equity Returns
(Thousands)

	1994	1995	1996	1997	1998	1999	2000	2001	2002	2003	2004	2005	2006
SNGP RETURNS													
SNGP Share of Common Stock		17%	17%	17%	16%	16%	16%	16%	16%	16%	16%	16%	16%
CS Dividends	-	-	-	-	-	-	-	-	-	-	-	7,867	40,641
SNGP CS Dividends		-	-	-	-	-	-	-	-	-	-	1,228	6,343
SNGP CS Dividends		-	-	-	-	-	-	-	-	-	-	1,228	6,343
Plus: SNGP NGL Pipeline Marginal Profit	-	-	-	-	-	-	-	-	-	-	-	-	-
Less: SNGP Equity	-	7,349	19,030	7,259	-	-	-	-	-	-	-	-	-
SNGP Net Cash Flow	-	(7,349)	(19,030)	(7,259)	-	-	-	-	-	-	-	1,228	6,343
Real SNGP Net Cash Flow	-	(7,002)	(17,638)	(6,545)	-	-	-	-	-	-	-	837	4,160
SNGP Real Return on Equity	4.0%												
PNG RETURNS													
PNG Share of Common Stock		17%	17%	17%	16%	16%	16%	16%	16%	16%	16%	16%	16%
CS Dividends	-	-	-	-	-	-	-	-	-	-	-	7,867	40,641
PNG CS Dividends		-	-	-	-	-	-	-	-	-	-	1,228	6,343
PNG CS Dividends		-	-	-	-	-	-	-	-	-	-	1,228	6,343
Plus: PNG Wet Gas Marginal Profit	-	-	-	-	-	-	-	-	-	-	-	-	-
Less: PNG Equity	-	7,349	19,030	7,259	-	-	-	-	-	-	-	-	-
PNG Net Cash Flow	-	(7,349)	(19,030)	(7,259)	-	-	-	-	-	-	-	1,228	6,343
Real PNG Net Cash Flow	-	(7,002)	(17,638)	(6,545)	-	-	-	-	-	-	-	837	4,160
PNG Real Return on Equity	4.0%												
GASPROM RETURNS													
Gasprom Share of Common Stock		17%	17%	17%	16%	16%	16%	16%	16%	16%	16%	16%	16%
CS Dividends	-	-	-	-	-	-	-	-	-	-	-	7,867	40,641
Gasprom CS Dividends		-	-	-	-	-	-	-	-	-	-	1,228	6,343
Gasprom CS Dividends		-	-	-	-	-	-	-	-	-	-	1,228	6,343
Plus: Gasprom Transport Marginal Profit	-	-	-	-	-	-	-	-	-	-	-	-	-
Less: Gasprom Equity	-	7,349	19,030	7,259	-	-	-	-	-	-	-	-	-
Gasprom Net Cash Flow	-	(7,349)	(19,030)	(7,259)	-	-	-	-	-	-	-	1,228	6,343
Real Gasprom Net Cash Flow	-	(7,002)	(17,638)	(6,545)	-	-	-	-	-	-	-	837	4,160
Gasprom Real Return on Equity	4.0%												
FOREIGN INVESTOR RETURNS													
Foreign Share of Common Stock		50%	50%	50%	53%	53%	53%	53%	53%	53%	53%	53%	53%
CS Dividends	-	-	-	-	-	-	-	-	-	-	-	7,867	40,641
Foreign CS Dividends		-	-	-	-	-	-	-	-	-	-	4,184	21,613
Foreign CS Dividends		-	-	-	-	-	-	-	-	-	-	4,184	21,613
Less: Foreign Equity	-	22,047	57,089	21,777	-	-	-	-	-	-	-	-	-
Less: Additional Equity Investment	-	-	-	-	13,712	-	-	-	-	-	-	-	-
Foreign Net Cash Flow	-	(22,047)	(57,089)	(21,777)	(13,712)	-	-	-	-	-	-	4,184	21,613
Real Foreign Cash Flow	-	(21,007)	(52,914)	(19,635)	(12,026)	-	-	-	-	-	-	2,854	14,176
Foreign Real Return on Equity	4.1%												

SIBERIAN GASS PROCESSING PLANT
Equity Returns

(Thousands)

	2007	2008	2009	2010	2011	2012	2013	2014	2015	Total
EQUITY INVESTMENT										
SNGP Equity	-	-	-	-	-	-	-	-	-	33,638
PNG Equity	-	-	-	-	-	-	-	-	-	33,638
Gasprom Equity	-	-	-	-	-	-	-	-	-	33,638
Foreign Equity	-	-	-	-	-	-	-	-	-	100,914
Additional Equity	-	-	-	-	-	-	-	-	-	13,712
Total Equity	-	-	-	-	-	-	-	-	-	215,539
CUMULATIVE EQUITY INVESTMENT										
SNGP Equity Holdings	33,638	33,638	33,638	33,638	33,638	33,638	33,638	33,638	33,638	
PNG Equity Holdings	33,638	33,638	33,638	33,638	33,638	33,638	33,638	33,638	33,638	
Gasprom Equity Holdings	33,638	33,638	33,638	33,638	33,638	33,638	33,638	33,638	33,638	
Foreign Equity Holdings	114,626	114,626	114,626	114,626	114,626	114,626	114,626	114,626	114,626	
CS Equity Position	215,539	215,539	215,539	215,539	215,539	215,539	215,539	215,539	215,539	
PROJECT RETURN ON EQUITY										
CS Dividends	63,179	56,245	58,495	60,835	63,268	65,799	68,431	71,168	87,529	643,459
Less: Equity Investment	-	-	-	-	-	-	-	-	-	215,539
Net Cash Flow	63,179	56,245	58,495	60,835	63,268	65,799	68,431	71,168	87,529	427,920
Cumulative	(103,852)	(47,607)	10,889	71,724	134,992	200,791	269,223	340,391	427,920	
Real Net Cash Flow	39,846	34,109	34,109	34,109	34,109	34,109	34,109	34,109	40,336	151,829
Real Return on Equity										

SIBERIAN GASS PROCESSING PLANT
Equity Returns

(Thousands)

	2007	2008	2009	2010	2011	2012	2013	2014	2015	Total
SNGP RETURNS										
SNGP Share of Common Stock	16%	16%	16%	16%	16%	16%	16%	16%	16%	
CS Dividends	63,179	56,245	58,495	60,835	63,268	65,799	68,431	71,168	87,529	643,459
SNGP CS Dividends	9,860	8,778	9,129	9,494	9,874	10,269	10,680	11,107	13,660	100,421
SNGP CS Dividends	9,860	8,778	9,129	9,494	9,874	10,269	10,680	11,107	13,660	100,421
Plus: SNGP NGL Pipeline Marginal Profit	-	-	-	-	-	-	-	-	-	-
Less: SNGP Equity	-	-	-	-	-	-	-	-	-	33,638
SNGP Net Cash Flow	9,860	8,778	9,129	9,494	9,874	10,269	10,680	11,107	13,660	66,783
Real SNGP Net Cash Flow	6,219	5,323	5,323	5,323	5,323	5,323	5,323	5,323	6,295	23,588
SNGP Real Return on Equity										
PNG RETURNS										
PNG Share of Common Stock	16%	16%	16%	16%	16%	16%	16%	16%	16%	
CS Dividends	63,179	56,245	58,495	60,835	63,268	65,799	68,431	71,168	87,529	643,459
PNG CS Dividends	9,860	8,778	9,129	9,494	9,874	10,269	10,680	11,107	13,660	100,421
PNG CS Dividends	9,860	8,778	9,129	9,494	9,874	10,269	10,680	11,107	13,660	100,421
Plus: PNG Wet Gas Marginal Profit	-	-	-	-	-	-	-	-	-	-
Less: PNG Equity	-	-	-	-	-	-	-	-	-	33,638
PNG Net Cash Flow	9,860	8,778	9,129	9,494	9,874	10,269	10,680	11,107	13,660	66,783
Real PNG Net Cash Flow	6,219	5,323	5,323	5,323	5,323	5,323	5,323	5,323	6,295	23,588
PNG Real Return on Equity										
GASPROM RETURNS										
Gasprom Share of Common Stock	16%	16%	16%	16%	16%	16%	16%	16%	16%	
CS Dividends	63,179	56,245	58,495	60,835	63,268	65,799	68,431	71,168	87,529	643,459
Gasprom CS Dividends	9,860	8,778	9,129	9,494	9,874	10,269	10,680	11,107	13,660	100,421
Gasprom CS Dividends	9,860	8,778	9,129	9,494	9,874	10,269	10,680	11,107	13,660	100,421
Plus: Gasprom Transport Marginal Profit	-	-	-	-	-	-	-	-	-	-
Less: Gasprom Equity	-	-	-	-	-	-	-	-	-	33,638
Gasprom Net Cash Flow	9,860	8,778	9,129	9,494	9,874	10,269	10,680	11,107	13,660	66,783
Real Gasprom Net Cash Flow	6,219	5,323	5,323	5,323	5,323	5,323	5,323	5,323	6,295	23,588
Gasprom Real Return on Equity										
FOREIGN INVESTOR RETURNS										
Foreign Share of Common Stock	53%	53%	53%	53%	53%	53%	53%	53%	53%	
CS Dividends	63,179	56,245	58,495	60,835	63,268	65,799	68,431	71,168	87,529	643,459
Foreign CS Dividends	33,599	29,912	31,108	32,353	33,647	34,993	36,392	37,848	46,549	342,197
Foreign CS Dividends	33,599	29,912	31,108	32,353	33,647	34,993	36,392	37,848	46,549	342,197
Less: Foreign Equity	-	-	-	-	-	-	-	-	-	100,914
Less: Additional Equity Investment	-	-	-	-	-	-	-	-	-	13,712
Foreign Net Cash Flow	33,599	29,912	31,108	32,353	33,647	34,993	36,392	37,848	46,549	227,571
Real Foreign Cash Flow	21,191	18,139	18,139	18,139	18,139	18,139	18,139	18,139	21,451	81,065
Foreign Real Return on Equity										

SIBERIAN GAS PROCESSING PLANT
Data and Key Results

TIMING DATA

Cost Estimate Month	Oct 93	First, Last Operation Month	Jan 96	Dec 15
Financial Closing Month	Jan 95	Economic Life	20.00	

ENGINEERING DATA

	1994	1995	1996	1997	1998	1999	2000	2001
Rated Capacity (BCM/yr)in 1996, 1998	2.14	4.28						
Stream Factor		-	100%	100%	100%	100%	100%	100%
Operations Partial Year Factor	-	-	1.000	1.000	1.000	100%	100%	100%
Wet Gas Processed (MCM)	-	-	2.14	2.14	4.28	4.28	4.28	4.28
Dry Gas Production (BCM)	-	-	1.80	1.91	3.76	3.76	3.76	3.76
NGL Production (MMTons)	-	-	0.36	0.49	1.07	1.07	1.07	1.07

REVENUE DATA (1996 $'s)

NGL Domestic Price ($/Ton)	67.86	Domestic Gas Price ($/MCM)	21.36
NGL Export Price ($/Ton)	144.00	Export Gas Price ($/MCM)	112.50
% NGL for Export	-	% Dry Gas for Export	100%

OPERATING COST DATA (1993 $000's)

Wet Gas Feedstock Cost ($/MCM)	-	
Chemicals Cost	382	
Utility Cost	19,432	
Maintenance Cost	985	
Labor Cost, Benefits	1,364	518
Other Expenses	10,134	

TRANSPORT COSTS (1996 $'s)

	DOM	EXP
Dry Gas In-Russia Costs ($/MCM)	-	40.00
Dry Gas Export Costs		32.00
NGL In-Russia Costs ($/Ton)	1.94	36.55
NGL Pipeline Costs	43.52	43.52
NGL Port Loading Charge		1.62
NGL Shipping Cost		15.10

CAPITAL COST DATA (1993 $000's)

	1995	1996	1997	Total
Gubkinsky GPP Expansion	43,700	157,500	90,300	291,500
Tarasovsky Gas Processing Plant	-	-	-	-
Gas Gathering Systems Cost	17,900	53,700	40,200	111,800
Metering Facilities Cost	440	1,290	970	2,700
Contributed Assets	9,838	15,151	2,687	27,676
Other Owners Costs	8,000	-	-	8,000
Infrastructure Costs	9,306	31,874	19,721	60,900
Initial Working Capital	2,839	-	-	2,839
Capital Costs	92,023	259,515	153,878	505,415

WORKING CAPITAL DATA

Days Receivables	45
Days Payables	45

FINANCING DATA

	WB/Other Loan	
% of Permanent Financing	70%	
Loan Amount, Commitment	409,040	409,050
Loan Interest Rate	8.15%	
Start of Repayment, Repayment Period	Jan 98	9.0
Commitment Fees %	0.25%	
Upfront Fee %	-	
Other Fin Fees & Close Costs (%, Amt)	-	

KEY RESULTS SUMMARY

Real Return on Investment (no taxes)	27.3%
Unleveraged Payback (Yrs)	2.6
Nominal NPV (Oct '93) @ 15.0%	360,071
Real Return on Equity	31.0%
Leveraged Payback (Yrs)	2.3
Nominal NPV (Oct '93) @ 15.0%	225,054
Min Debt Service Coverage	183%
Average Debt Service Coverage	235%

FINANCING DATA (cont'd)

	Actual
Required Reserves (1st Operating Yr)	38,232
Cash Flow Dedicated to Reserves	100%
Reinvestment Rate	3.0%

TAX DATA

Tax & Book In Service Month	Jan 96
Profits Tax	32.00%
15% Yr SL Property %	100.0%
Carryforward Years	5
VAT Tax (% of CapEx)	20.0%
Property Tax (% of Fixed Assets)	-
Road Tax (% of Revenues)	0.4%
Dry Gas Export Tariff ('93 $/MCM)	-
NGL Export Tariff ('93 $/Ton)	-

ECONOMIC DATA

Global Inflation Rate	2.8% **
Capital Cost Esc Rate	2.8%
O&M Esc Rate	2.8%
Export Gas Price Esc Rate	2.8%
Domestic Gas Price Esc Rate	2.8%
Export NGL Price Esc Rate	2.8%
Domestic NGL Price Esc Rate	2.8%

** Until 2000, 4% thereafter
(all escalation equivalent to inflation)

SENSITIVITY ANALYSIS FACTORS

O&M Cost	1.00
Gas Price	1.25
NGL Price	1.00
Capital Cost	1.00
Transport Cost	1.00
Wet Gas Price	1.00

LOL

SIBERIAN GAS PROCESSING PLANT
Annual Sources and Uses of Funds During Construction

($US Thousands)

	1995	1996	1997	Total	%
SOURCES OF FUNDS					
World Bank/Other Loan	68,864	202,675	137,501	409,040	70%
SIBNG Cash Equity	-	-	-	-	-
PNG Cash Equity	-	-	-	-	-
Gasprom Cash Equity	4,919	7,576	1,344	13,838	2%
SIBNG Equity	4,919	7,576	1,344	13,838	2%
PNG Equity	4,919	7,576	1,344	13,838	2%
Foreign Equity	14,757	22,727	4,031	41,514	7%
JV Operating Cash Flow	-	41,407	50,868	92,275	16%
Total Sources of Funds	98,377	289,536	196,430	584,343	100%
USES OF FUNDS					
Gubkinsky GPP Expansion	45,950	169,606	99,266	314,821	
Tarasovsky Gas Processing Plant	-	-	-	-	
Gas Gathering Systems Cost	18,820	57,765	44,281	120,866	
Metering Facilities Costs	463	1,388	1,068	2,919	
Infrastructure Costs	9,785	34,314	21,692	65,791	
Contributed Assets	9,838	15,151	2,687	27,676	
Other Owners Costs	8,281	-	-	8,281	
Initial Working Capital	3,000	-	-	3,000	
Capital Costs	96,136	278,223	168,995	543,353	93%
Other Loan Interest	1,259	10,627	27,274	39,161	
Other Loan Commitment Fees	982	686	161	1,829	
Upfront Fees	-	-	-	-	
Financing Costs	2,241	11,313	27,435	40,990	7%
Total Uses of Funds	98,377	289,536	196,430	584,343	100%

	$	%
Total Debt	409,040	70%
Operating Cash	92,275	16%
Equity Requirement	83,028	14%
	584,343	100%

MEMORANDA	WB/Other Loan	
Loan Draws, Amount	409,040	
Standby Facility	-	
Constr Loan Draws + Standby, Commitment	409,040	409,050
Constr Loan Int Rate	8.15%	
Commitment Fee Rate	0.25%	
Upfront Fee Rate	-	
Other Financing Fees (%, Amt)	-	
Repayment Period	9.0	

** NOTE: ANNUAL SANDU STATEMENT IS FOR PRESENTATION ONLY. VALUES ARE FROM QUARTERLY CALCULATIONS.

VAT TAX FUNDING				
VAT Tax	15,003	52,614	33,262	100,879
VAT Recovery Expressed in $'s	435	8,945	30,692	40,072
Net VAT Payment	14,569	43,669	2,570	60,807
PNG Cash Equity for VAT	2,428	7,278	428	10,135
SNGP Cash Equity for VAT	2,428	7,278	428	10,135
Gasprom Cash Equity for VAT	2,428	7,278	428	10,135
Foreign Equity for VAT	7,284	21,834	1,285	30,404
Cash Equity for VAT	14,569	43,669	2,570	60,807

Equity Requirement	83,028
Equity for VAT	60,807
Total Equity	143,835

SIBERIAN GASS PROCESSING PLANT
Equity Returns

(Thousands)

	1994	1995	1996	1997	1998	1999	2000	2001	2002	2003	2004	2005	2006
EQUITY INVESTMENT													
SNGP Equity	-	7,347	14,854	1,772	-	-	-	-	-	-	-	-	-
PNG Equity	-	7,347	14,854	1,772	-	-	-	-	-	-	-	-	-
Gasprom Equity	-	7,347	14,854	1,772	-	-	-	-	-	-	-	-	-
Foreign Equity	-	22,041	44,561	5,315	-	-	-	-	-	-	-	-	-
Additional Equity	-	-	-	-	-	-	-	-	-	-	-	-	-
Total Equity	-	44,082	89,123	10,631	-	-	-	-	-	-	-	-	-
CUMULATIVE EQUITY INVESTMENT													
SNGP Equity Holdings	-	7,347	22,201	23,973	23,973	23,973	23,973	23,973	23,973	23,973	23,973	23,973	23,973
PNG Equity Holdings	-	7,347	22,201	23,973	23,973	23,973	23,973	23,973	23,973	23,973	23,973	23,973	23,973
Gasprom Equity Holdings	-	7,347	22,201	23,973	23,973	23,973	23,973	23,973	23,973	23,973	23,973	23,973	23,973
Foreign Equity Holdings	-	22,041	66,602	71,918	71,918	71,918	71,918	71,918	71,918	71,918	71,918	71,918	71,918
CS Equity Position	-	44,082	133,205	143,835	143,835	143,835	143,835	143,835	143,835	143,835	143,835	143,835	143,835
PROJECT RETURN ON EQUITY													
CS Dividends	-	-	-	-	25,098	92,235	84,259	79,997	85,269	89,225	88,530	80,213	109,764
Less: Equity Investment	-	44,082	89,123	10,631	-	-	-	-	-	-	-	-	-
Net Cash Flow	-	(44,082)	(89,123)	(10,631)	25,098	92,235	84,259	79,997	85,269	89,225	88,530	80,213	109,764
Cumulative	-	(44,082)	(133,205)	(143,835)	(118,738)	(26,503)	57,756	137,753	223,022	312,247	400,777	480,990	590,754
Real Net Cash Flow	-	(42,002)	(82,605)	(9,585)	22,012	78,692	69,930	63,839	65,429	65,831	62,806	54,717	71,996
Real Return on Equity	31.0%												

1728

SIBERIAN GASS PROCESSING PLANT
Equity Returns
(Thousands)

	1994	1995	1996	1997	1998	1999	2000	2001	2002	2003	2004	2005	2006
SNGP RETURNS													
SNGP Share of Common Stock		17%	17%	17%	17%	17%	17%	17%	17%	17%	17%	17%	17%
CS Dividends	-	-	-	-	25,098	92,235	84,259	79,997	85,269	89,225	88,530	80,213	109,764
SNGP CS Dividends		-	-	-	4,183	15,372	14,043	13,333	14,212	14,871	14,755	13,369	18,294
SNGP CS Dividends		-	-	-	4,183	15,372	14,043	13,333	14,212	14,871	14,755	13,369	18,294
Plus: SNGP NGL Pipeline Marginal Profit	-	-	-	-	-	-	-	-	-	-	-	-	-
Less: SNGP Equity	-	7,347	14,854	1,772	-	-	-	-	-	-	-	-	-
SNGP Net Cash Flow	-	(7,347)	(14,854)	(1,772)	4,183	15,372	14,043	13,333	14,212	14,871	14,755	13,369	18,294
Real SNGP Net Cash Flow	-	(7,000)	(13,768)	(1,597)	3,669	13,115	11,655	10,640	10,905	10,972	10,468	9,120	11,999
SNGP Real Return on Equity	31.0%												
PNG RETURNS													
PNG Share of Common Stock		17%	17%	17%	17%	17%	17%	17%	17%	17%	17%	17%	17%
CS Dividends	-	-	-	-	25,098	92,235	84,259	79,997	85,269	89,225	88,530	80,213	109,764
PNG CS Dividends		-	-	-	4,183	15,372	14,043	13,333	14,212	14,871	14,755	13,369	18,294
PNG CS Dividends		-	-	-	4,183	15,372	14,043	13,333	14,212	14,871	14,755	13,369	18,294
Plus: PNG Wet Gas Marginal Profit	-	-	-	-	-	-	-	-	-	-	-	-	-
Less: PNG Equity	-	7,347	14,854	1,772	-	-	-	-	-	-	-	-	-
PNG Net Cash Flow	-	(7,347)	(14,854)	(1,772)	4,183	15,372	14,043	13,333	14,212	14,871	14,755	13,369	18,294
Real PNG Net Cash Flow	-	(7,000)	(13,768)	(1,597)	3,669	13,115	11,655	10,640	10,905	10,972	10,468	9,120	11,999
PNG Real Return on Equity	31.0%												
GASPROM RETURNS													
Gasprom Share of Common Stock		17%	17%	17%	17%	17%	17%	17%	17%	17%	17%	17%	17%
CS Dividends	-	-	-	-	25,098	92,235	84,259	79,997	85,269	89,225	88,530	80,213	109,764
Gasprom CS Dividends		-	-	-	4,183	15,372	14,043	13,333	14,212	14,871	14,755	13,369	18,294
Gasprom CS Dividends		-	-	-	4,183	15,372	14,043	13,333	14,212	14,871	14,755	13,369	18,294
Plus: Gasprom Transport Marginal Profit	-	-	-	-	-	-	-	-	-	-	-	-	-
Less: Gasprom Equity	-	7,347	14,854	1,772	-	-	-	-	-	-	-	-	-
Gasprom Net Cash Flow	-	(7,347)	(14,854)	(1,772)	4,183	15,372	14,043	13,333	14,212	14,871	14,755	13,369	18,294
Real Gasprom Net Cash Flow	-	(7,000)	(13,768)	(1,597)	3,669	13,115	11,655	10,640	10,905	10,972	10,468	9,120	11,999
Gasprom Real Return on Equity	31.0%												
FOREIGN INVESTOR RETURNS													
Foreign Share of Common Stock		50%	50%	50%	50%	50%	50%	50%	50%	50%	50%	50%	50%
CS Dividends	-	-	-	-	25,098	92,235	84,259	79,997	85,269	89,225	88,530	80,213	109,764
Foreign CS Dividends		-	-	-	12,549	46,117	42,130	39,999	42,635	44,612	44,265	40,106	54,882
Foreign CS Dividends		-	-	-	12,549	46,117	42,130	39,999	42,635	44,612	44,265	40,106	54,882
Less: Foreign Equity	-	22,041	44,561	5,315	-	-	-	-	-	-	-	-	-
Less: Additional Equity Investment	-	-	-	-	-	-	-	-	-	-	-	-	-
Foreign Net Cash Flow	-	(22,041)	(44,561)	(5,315)	12,549	46,117	42,130	39,999	42,635	44,612	44,265	40,106	54,882
Real Foreign Cash Flow	-	(21,001)	(41,303)	(4,792)	11,006	39,346	34,965	31,920	32,715	32,916	31,403	27,359	35,998
oreign Real Return on Equity	31.0%												

SIBERIAN GASS PROCESSING PLANT
Equity Returns

(Thousands)

	2007	2008	2009	2010	2011	2012	2013	2014	2015	Total
EQUITY INVESTMENT										
SNGP Equity	-	-	-	-	-	-	-	-	-	23,973
PNG Equity	-	-	-	-	-	-	-	-	-	23,973
Gasprom Equity	-	-	-	-	-	-	-	-	-	23,973
Foreign Equity	-	-	-	-	-	-	-	-	-	71,918
Additional Equity	-	-	-	-	-	-	-	-	-	-
Total Equity	-	-	-	-	-	-	-	-	-	143,835
CUMULATIVE EQUITY INVESTMENT										
SNGP Equity Holdings	23,973	23,973	23,973	23,973	23,973	23,973	23,973	23,973	23,973	
PNG Equity Holdings	23,973	23,973	23,973	23,973	23,973	23,973	23,973	23,973	23,973	
Gasprom Equity Holdings	23,973	23,973	23,973	23,973	23,973	23,973	23,973	23,973	23,973	
Foreign Equity Holdings	71,918	71,918	71,918	71,918	71,918	71,918	71,918	71,918	71,918	
CS Equity Position	143,835	143,835	143,835	143,835	143,835	143,835	143,835	143,835	143,835	
PROJECT RETURN ON EQUITY										
CS Dividends	137,703	143,211	148,939	154,897	161,093	167,537	174,238	181,208	222,864	2,226,279
Less: Equity Investment	-	-	-	-	-	-	-	-	-	143,835
Net Cash Flow	137,703	143,211	148,939	154,897	161,093	167,537	174,238	181,208	222,864	2,082,444
Cumulative	728,457	871,668	1,020,607	1,175,505	1,336,597	1,504,134	1,678,372	1,859,580	2,082,444	
Real Net Cash Flow	86,847	86,847	86,847	86,847	86,847	86,847	86,847	86,847	102,704	1,218,543
Real Return on Equity										

170

121

SIBERIAN GASS PROCESSING PLANT
Equity Returns
(Thousands)

	2007	2008	2009	2010	2011	2012	2013	2014	2015	Total
SNGP RETURNS										
SNGP Share of Common Stock	17%	17%	17%	17%	17%	17%	17%	17%	17%	
CS Dividends	137,703	143,211	148,939	154,897	161,093	167,537	174,238	181,208	222,864	2,226,279
SNGP CS Dividends	22,950	23,869	24,823	25,816	26,849	27,923	29,040	30,201	37,144	371,047
SNGP CS Dividends	22,950	23,869	24,823	25,816	26,849	27,923	29,040	30,201	37,144	371,047
Plus: SNGP NGL Pipeline Marginal Profit	-	-	-	-	-	-	-	-	-	-
Less: SNGP Equity	-	-	-	-	-	-	-	-	-	23,973
SNGP Net Cash Flow	22,950	23,869	24,823	25,816	26,849	27,923	29,040	30,201	37,144	347,074
Real SNGP Net Cash Flow	14,475	14,475	14,475	14,475	14,475	14,475	14,475	14,475	17,117	203,091
SNGP Real Return on Equity										
PNG RETURNS										
PNG Share of Common Stock	17%	17%	17%	17%	17%	17%	17%	17%	17%	
CS Dividends	137,703	143,211	148,939	154,897	161,093	167,537	174,238	181,208	222,864	2,226,279
PNG CS Dividends	22,950	23,869	24,823	25,816	26,849	27,923	29,040	30,201	37,144	371,047
PNG CS Dividends	22,950	23,869	24,823	25,816	26,849	27,923	29,040	30,201	37,144	371,047
Plus: PNG Wet Gas Marginal Profit	-	-	-	-	-	-	-	-	-	-
Less: PNG Equity	-	-	-	-	-	-	-	-	-	23,973
PNG Net Cash Flow	22,950	23,869	24,823	25,816	26,849	27,923	29,040	30,201	37,144	347,074
Real PNG Net Cash Flow	14,475	14,475	14,475	14,475	14,475	14,475	14,475	14,475	17,117	203,091
PNG Real Return on Equity										
GASPROM RETURNS										
Gasprom Share of Common Stock	17%	17%	17%	17%	17%	17%	17%	17%	17%	
CS Dividends	137,703	143,211	148,939	154,897	161,093	167,537	174,238	181,208	222,864	2,226,279
Gasprom CS Dividends	22,950	23,869	24,823	25,816	26,849	27,923	29,040	30,201	37,144	371,047
Gasprom CS Dividends	22,950	23,869	24,823	25,816	26,849	27,923	29,040	30,201	37,144	371,047
Plus: Gasprom Transport Marginal Profit	-	-	-	-	-	-	-	-	-	-
Less: Gasprom Equity	-	-	-	-	-	-	-	-	-	23,973
Gasprom Net Cash Flow	22,950	23,869	24,823	25,816	26,849	27,923	29,040	30,201	37,144	347,074
Real Gasprom Net Cash Flow	14,475	14,475	14,475	14,475	14,475	14,475	14,475	14,475	17,117	203,091
Gasprom Real Return on Equity										
FOREIGN INVESTOR RETURNS										
Foreign Share of Common Stock	50%	50%	50%	50%	50%	50%	50%	50%	50%	
CS Dividends	137,703	143,211	148,939	154,897	161,093	167,537	174,238	181,208	222,864	2,226,279
Foreign CS Dividends	68,851	71,606	74,470	77,449	80,546	83,768	87,119	90,604	111,432	1,113,140
Foreign CS Dividends	68,851	71,606	74,470	77,449	80,546	83,768	87,119	90,604	111,432	1,113,140
Less: Foreign Equity	-	-	-	-	-	-	-	-	-	71,918
Less: Additional Equity Investment	-	-	-	-	-	-	-	-	-	-
Foreign Net Cash Flow	68,851	71,606	74,470	77,449	80,546	83,768	87,119	90,604	111,432	1,041,222
Real Foreign Cash Flow	43,424	43,424	43,424	43,424	43,424	43,424	43,424	43,424	51,352	609,272
Foreign Real Return on Equity										

SIBERIAN GAS PROCESSING PLANT
Data and Key Results

TIMING DATA

Cost Estimate Month	Oct 93	First, Last Operation Month	Jan 96	Dec 15
Financial Closing Month	Jan 95	Economic Life	20.00	

ENGINEERING DATA

	1994	1995	1996	1997	1998	1999	2000	2001
Rated Capacity (BCM/yr) in 1996, 1998	2.14	4.28						
Stream Factor		-	100%	100%	100%	100%	100%	100%
Operations Partial Year Factor	-	-	1.000	1.000	1.000	100%	100%	100%
Wet Gas Processed (MCM)	-	-	2.14	2.14	4.28	4.28	4.28	4.28
Dry Gas Production (BCM)	-	-	1.80	1.91	3.76	3.76	3.76	3.76
NGL Production (MMTons)	-	-	0.36	0.49	1.07	1.07	1.07	1.07

REVENUE DATA (1996 $'s)

NGL Domestic Price ($/Ton)	67.86	Domestic Gas Price ($/MCM)	16.24
NGL Export Price ($/Ton)	144.00	Export Gas Price ($/MCM)	85.50
% NGL for Export	-	% Dry Gas for Export	100%

OPERATING COST DATA (1993 $000's)

Wet Gas Feedstock Cost ($/MCM)	-	
Chemicals Cost	382	
Utility Cost	19,432	
Maintenance Cost	985	
Labor Cost, Benefits	1,364	518
Other Expenses	10,134	

TRANSPORT COSTS (1996 $'s)

	DOM	EXP
Dry Gas In-Russia Costs ($/MCM)	-	40.00
Dry Gas Export Costs		32.00
NGL In-Russia Costs ($/Ton)	1.94	36.55
NGL Pipeline Costs	43.52	43.52
NGL Port Loading Charge		1.62
NGL Shipping Cost		15.10

CAPITAL COST DATA (1993 $000's)

	1995	1996	1997	Total
Gubkinsky GPP Expansion	43,700	157,500	90,300	291,500
Tarasovsky Gas Processing Plant	-	-	-	-
Gas Gathering Systems Cost	17,900	53,700	40,200	111,800
Metering Facilities Cost	440	1,290	970	2,700
Contributed Assets	9,843	25,350	15,858	51,050
Other Owners Costs	8,000	-	-	8,000
Infrastructure Costs	9,306	31,874	19,721	60,900
Initial Working Capital	2,839	-	-	2,839
Capital Costs	92,027	269,714	167,048	528,789

WORKING CAPITAL DATA

Days Receivables	45
Days Payables	45

FINANCING DATA

	WB/Other Loan	
% of Permanent Financing	70%	
Loan Amount, Commitment	426,230	426,230
Loan Interest Rate	8.15%	
Start of Repayment, Repayment Period	Jan 98	9.0
Commitment Fees %	0.25%	
Upfront Fee %	-	
Other Fin Fees & Close Costs (%, Amt)	-	

KEY RESULTS SUMMARY

Real Return on Investment (no taxes)	3.9%
Unleveraged Payback (Yrs)	10.0
Nominal NPV (Oct '93) @ 15.0%	(133866)
Real Return on Equity	(2.4%)
Leveraged Payback (Yrs)	16.9
Nominal NPV (Oct '93) @ 15.0%	(149381)
Min Debt Service Coverage	61%
Average Debt Service Coverage	76%

FINANCING DATA (cont'd)

	Actual
Required Reserves (1st Operating Yr)	39,839
Cash Flow Dedicated to Reserves	100%
Reinvestment Rate	3.0%

TAX DATA

Tax & Book In Service Month	Jan 96
Profits Tax	32.00%
15% Yr SL Property %	100.0%
Carryforward Years	5
VAT Tax (% of CapEx)	20.0%
Property Tax (% of Fixed Assets)	-
Road Tax (% of Revenues)	0.4%
Dry Gas Export Tariff ('93 $/MCM)	-
NGL Export Tariff ('93 $/Ton)	-

ECONOMIC DATA

Global Inflation Rate	2.8% **
Capital Cost Esc Rate	2.8%
O&M Esc Rate	2.8%
Export Gas Price Esc Rate	2.8%
Domestic Gas Price Esc Rate	2.8%
Export NGL Price Esc Rate	2.8%
Domestic NGL Price Esc Rate	2.8%

** Until 2000, 4% thereafter
(all escalation equivalent to inflation)

SENSITIVITY ANALYSIS FACTORS

O&M Cost	1.00
Gas Price	0.95
NGL Price	1.00
Capital Cost	1.00
Transport Cost	1.00
Wet Gas Price	1.00

123

SIBERIAN GAS PROCESSING PLANT
Annual Sources and Uses of Funds During Construction

($US Thousands)

	1995	1996	1997	Total	%
SOURCES OF FUNDS					
World Bank/Other Loan	68,898	209,992	147,340	426,230	70%
SIBNG Cash Equity	-	-	-	-	-
PNG Cash Equity	-	-	-	-	-
Gasprom Cash Equity	4,921	12,675	7,929	25,525	4%
SIBNG Equity	4,921	12,675	7,929	25,525	4%
PNG Equity	4,921	12,675	7,929	25,525	4%
Foreign Equity	14,764	38,025	23,786	76,576	13%
JV Operating Cash Flow	-	13,946	15,573	29,519	5%
Total Sources of Funds	98,426	299,988	210,486	608,900	100%
USES OF FUNDS					
Gubkinsky GPP Expansion	45,950	169,606	99,266	314,821	
Tarasovsky Gas Processing Plant	-	-	-	-	
Gas Gathering Systems Cost	18,820	57,765	44,281	120,866	
Metering Facilities Costs	463	1,388	1,068	2,919	
Infrastructure Costs	9,785	34,314	21,692	65,791	
Contributed Assets	9,843	25,350	15,858	51,050	
Other Owners Costs	8,281	-	-	8,281	
Initial Working Capital	3,000	-	-	3,000	
Capital Costs	96,140	288,422	182,166	566,728	93%
Other Loan Interest	1,260	10,844	28,144	40,249	
Other Loan Commitment Fees	1,025	722	176	1,923	
Upfront Fees	-	-	-	-	
Financing Costs	2,285	11,566	28,320	42,172	7%
Total Uses of Funds	98,426	299,988	210,486	608,900	100%

	$	%
Total Debt	426,230	70%
Operating Cash	29,519	5%
Equity Requirement	153,151	25%
	608,900	100%

MEMORANDA	WB/Other Loan	
Loan Draws, Amount	426,230	
Standby Facility	-	
Constr Loan Draws + Standby, Commitment	426,230	426,230
Constr Loan Int Rate	8.15%	
Commitment Fee Rate	0.25%	
Upfront Fee Rate	-	
Other Financing Fees (%, Amt)	-	
Repayment Period	9.0	

** NOTE: ANNUAL SANDU STATEMENT IS FOR PRESENTATION ONLY. VALUES ARE FROM QUARTERLY CALCULATIONS.

VAT TAX FUNDING				
VAT Tax	15,003	52,614	33,262	100,879
VAT Recovery Expressed in $'s	435	8,945	30,692	40,072
Net VAT Payment	14,569	43,669	2,570	60,807
PNG Cash Equity for VAT	2,428	7,278	428	10,135
SNGP Cash Equity for VAT	2,428	7,278	428	10,135
Gasprom Cash Equity for VAT	2,428	7,278	428	10,135
Foreign Equity for VAT	7,284	21,834	1,285	30,404
Cash Equity for VAT	14,569	43,669	2,570	60,807

Equity Requirement	153,151
Equity for VAT	60,807
Total Equity	213,959

SIBERIAN GASS PROCESSING PLANT
Equity Returns

(Thousands)

	1994	1995	1996	1997	1998	1999	2000	2001	2002	2003	2004	2005	2006
EQUITY INVESTMENT													
SNGP Equity	-	7,349	19,953	8,357	-	-	-	-	-	-	-	-	-
PNG Equity	-	7,349	19,953	8,357	-	-	-	-	-	-	-	-	-
Gasprom Equity	-	7,349	19,953	8,357	-	-	-	-	-	-	-	-	-
Foreign Equity	-	22,048	59,860	25,071	-	-	-	-	-	-	-	-	-
Additional Equity	-	-	-	-	30,965	13,124	19,641	24,920	19,432	13,875	8,245	9,750	4,894
Total Equity	-	44,096	119,720	50,143	30,965	13,124	19,641	24,920	19,432	13,875	8,245	9,750	4,894
CUMULATIVE EQUITY INVESTMENT													
SNGP Equity Holdings	-	7,349	27,303	35,660	35,660	35,660	35,660	35,660	35,660	35,660	35,660	35,660	35,660
PNG Equity Holdings	-	7,349	27,303	35,660	35,660	35,660	35,660	35,660	35,660	35,660	35,660	35,660	35,660
Gasprom Equity Holdings	-	7,349	27,303	35,660	35,660	35,660	35,660	35,660	35,660	35,660	35,660	35,660	35,660
Foreign Equity Holdings	-	22,048	81,908	106,979	137,944	151,068	170,710	195,630	215,062	228,937	237,183	246,933	251,826
CS Equity Position	-	44,096	163,816	213,959	244,923	258,048	277,689	302,609	322,042	335,917	344,162	353,912	358,806
PROJECT RETURN ON EQUITY													
CS Dividends	-	-	-	-	-	-	-	-	-	-	-	-	-
Less: Equity Investment	-	44,096	119,720	50,143	30,965	13,124	19,641	24,920	19,432	13,875	8,245	9,750	4,894
Net Cash Flow	-	(44,096)	(119,720)	(50,143)	(30,965)	(13,124)	(19,641)	(24,920)	(19,432)	(13,875)	(8,245)	(9,750)	(4,894)
Cumulative	-	(44,096)	(163,816)	(213,959)	(244,923)	(258,048)	(277,689)	(302,609)	(322,042)	(335,917)	(344,162)	(353,912)	(358,806)
Real Net Cash Flow	-	(42,016)	(110,965)	(45,210)	(27,158)	(11,197)	(16,301)	(19,887)	(14,911)	(10,237)	(5,850)	(6,651)	(3,210)
Real Return on Equity	(2.4%)												

SIBERIAN GASS PROCESSING PLANT
Equity Returns
(Thousands)

	1994	1995	1996	1997	1998	1999	2000	2001	2002	2003	2004	2005	2006
SNGP RETURNS													
SNGP Share of Common Stock		17%	17%	17%	15%	14%	13%	12%	11%	11%	10%	10%	10%
CS Dividends	-	-	-	-	-	-	-	-	-	-	-	-	-
SNGP CS Dividends		-	-	-	-	-	-	-	-	-	-	-	-
SNGP CS Dividends		-	-	-	-	-	-	-	-	-	-	-	-
Plus: SNGP NGL Pipeline Marginal Profit	-	-	-	-	-	-	-	-	-	-	-	-	-
Less: SNGP Equity	-	7,349	19,953	8,357	-	-	-	-	-	-	-	-	-
SNGP Net Cash Flow	-	(7,349)	(19,953)	(8,357)	-	-	-	-	-	-	-	-	-
Real SNGP Net Cash Flow	-	(7,003)	(18,494)	(7,535)	-	-	-	-	-	-	-	-	-
SNGP Real Return on Equity	#ARITH												
PNG RETURNS													
PNG Share of Common Stock		17%	17%	17%	15%	14%	13%	12%	11%	11%	10%	10%	10%
CS Dividends	-	-	-	-	-	-	-	-	-	-	-	-	-
PNG CS Dividends		-	-	-	-	-	-	-	-	-	-	-	-
PNG CS Dividends		-	-	-	-	-	-	-	-	-	-	-	-
Plus: PNG Wet Gas Marginal Profit	-	-	-	-	-	-	-	-	-	-	-	-	-
Less: PNG Equity	-	7,349	19,953	8,357	-	-	-	-	-	-	-	-	-
PNG Net Cash Flow	-	(7,349)	(19,953)	(8,357)	-	-	-	-	-	-	-	-	-
Real PNG Net Cash Flow	-	(7,003)	(18,494)	(7,535)	-	-	-	-	-	-	-	-	-
PNG Real Return on Equity	(2.5%)												
GASPROM RETURNS													
Gasprom Share of Common Stock		17%	17%	17%	15%	14%	13%	12%	11%	11%	10%	10%	10%
CS Dividends	-	-	-	-	-	-	-	-	-	-	-	-	-
Gasprom CS Dividends		-	-	-	-	-	-	-	-	-	-	-	-
Gasprom CS Dividends		-	-	-	-	-	-	-	-	-	-	-	-
Plus: Gasprom Transport Marginal Profit	-	-	-	-	-	-	-	-	-	-	-	-	-
Less: Gasprom Equity	-	7,349	19,953	8,357	-	-	-	-	-	-	-	-	-
Gasprom Net Cash Flow	-	(7,349)	(19,953)	(8,357)	-	-	-	-	-	-	-	-	-
Real Gasprom Net Cash Flow	-	(7,003)	(18,494)	(7,535)	-	-	-	-	-	-	-	-	-
Gasprom Real Return on Equity	#ARITH												
FOREIGN INVESTOR RETURNS													
Foreign Share of Common Stock		50%	50%	50%	56%	59%	61%	65%	67%	68%	69%	70%	70%
CS Dividends	-	-	-	-	-	-	-	-	-	-	-	-	-
Foreign CS Dividends		-	-	-	-	-	-	-	-	-	-	-	-
Foreign CS Dividends		-	-	-	-	-	-	-	-	-	-	-	-
Less: Foreign Equity	-	22,048	59,860	25,071	-	-	-	-	-	-	-	-	-
Less: Additional Equity Investment	-	-	-	-	30,965	13,124	19,641	24,920	19,432	13,875	8,245	9,750	4,894
Foreign Net Cash Flow	-	(22,048)	(59,860)	(25,071)	(30,965)	(13,124)	(19,641)	(24,920)	(19,432)	(13,875)	(8,245)	(9,750)	(4,894)
Real Foreign Cash Flow	-	(21,008)	(55,482)	(22,605)	(27,158)	(11,197)	(16,301)	(19,887)	(14,911)	(10,237)	(5,850)	(6,651)	(3,210)
Foreign Real Return on Equity	(2.3%)												

126

SIBERIAN GASS PROCESSING PLANT
Equity Returns

(Thousands)

	2007	2008	2009	2010	2011	2012	2013	2014	2015	Total
EQUITY INVESTMENT										
SNGP Equity	-	-	-	-	-	-	-	-	-	35,660
PNG Equity	-	-	-	-	-	-	-	-	-	35,660
Gasprom Equity	-	-	-	-	-	-	-	-	-	35,660
Foreign Equity	-	-	-	-	-	-	-	-	-	106,979
Additional Equity	-	-	-	-	-	-	-	-	-	144,847
Total Equity	-	-	-	-	-	-	-	-	-	358,806
CUMULATIVE EQUITY INVESTMENT										
SNGP Equity Holdings	35,660	35,660	35,660	35,660	35,660	35,660	35,660	35,660	35,660	
PNG Equity Holdings	35,660	35,660	35,660	35,660	35,660	35,660	35,660	35,660	35,660	
Gasprom Equity Holdings	35,660	35,660	35,660	35,660	35,660	35,660	35,660	35,660	35,660	
Foreign Equity Holdings	251,826	251,826	251,826	251,826	251,826	251,826	251,826	251,826	251,826	
CS Equity Position	358,806	358,806	358,806	358,806	358,806	358,806	358,806	358,806	358,806	
PROJECT RETURN ON EQUITY										
CS Dividends	46,210	48,058	43,233	42,023	43,704	45,452	47,270	49,161	60,462	425,571
Less: Equity Investment	-	-	-	-	-	-	-	-	-	358,806
Net Cash Flow	46,210	48,058	43,233	42,023	43,704	45,452	47,270	49,161	60,462	66,765
Cumulative	(312,596)	(264,538)	(221,305)	(179,282)	(135,578)	(90,127)	(42,857)	6,304	66,765	
Real Net Cash Flow	29,144	29,144	25,209	23,561	23,561	23,561	23,561	23,561	27,863	(84,426)
Real Return on Equity										

127

116

SIBERIAN GASS PROCESSING PLANT
Equity Returns

(Thousands)

	2007	2008	2009	2010	2011	2012	2013	2014	2015	Total
SNGP RETURNS										
SNGP Share of Common Stock	10%	10%	10%	10%	10%	10%	10%	10%	10%	
CS Dividends	46,210	48,058	43,233	42,023	43,704	45,452	47,270	49,161	60,462	425,571
SNGP CS Dividends	4,593	4,776	4,297	4,176	4,343	4,517	4,698	4,886	6,009	42,295
SNGP CS Dividends	4,593	4,776	4,297	4,176	4,343	4,517	4,698	4,886	6,009	42,295
Plus: SNGP NGL Pipeline Marginal Profit	-	-	-	-	-	-	-	-	-	-
Less: SNGP Equity	-	-	-	-	-	-	-	-	-	35,660
SNGP Net Cash Flow	4,593	4,776	4,297	4,176	4,343	4,517	4,698	4,886	6,009	6,635
Real SNGP Net Cash Flow	2,896	2,896	2,505	2,342	2,342	2,342	2,342	2,342	2,769	(10,256)
SNGP Real Return on Equity										
PNG RETURNS										
PNG Share of Common Stock	10%	10%	10%	10%	10%	10%	10%	10%	10%	
CS Dividends	46,210	48,058	43,233	42,023	43,704	45,452	47,270	49,161	60,462	425,571
PNG CS Dividends	4,593	4,776	4,297	4,176	4,343	4,517	4,698	4,886	6,009	42,295
PNG CS Dividends	4,593	4,776	4,297	4,176	4,343	4,517	4,698	4,886	6,009	42,295
Plus: PNG Wet Gas Marginal Profit	-	-	-	-	-	-	-	-	-	-
Less: PNG Equity	-	-	-	-	-	-	-	-	-	35,660
PNG Net Cash Flow	4,593	4,776	4,297	4,176	4,343	4,517	4,698	4,886	6,009	6,635
Real PNG Net Cash Flow	2,896	2,896	2,505	2,342	2,342	2,342	2,342	2,342	2,769	(10,256)
PNG Real Return on Equity										
GASPROM RETURNS										
Gasprom Share of Common Stock	10%	10%	10%	10%	10%	10%	10%	10%	10%	
CS Dividends	46,210	48,058	43,233	42,023	43,704	45,452	47,270	49,161	60,462	425,571
Gasprom CS Dividends	4,593	4,776	4,297	4,176	4,343	4,517	4,698	4,886	6,009	42,295
Gasprom CS Dividends	4,593	4,776	4,297	4,176	4,343	4,517	4,698	4,886	6,009	42,295
Plus: Gasprom Transport Marginal Profit	-	-	-	-	-	-	-	-	-	-
Less: Gasprom Equity	-	-	-	-	-	-	-	-	-	35,660
Gasprom Net Cash Flow	4,593	4,776	4,297	4,176	4,343	4,517	4,698	4,886	6,009	6,635
Real Gasprom Net Cash Flow	2,896	2,896	2,505	2,342	2,342	2,342	2,342	2,342	2,769	(10,256)
Gasprom Real Return on Equity										
FOREIGN INVESTOR RETURNS										
Foreign Share of Common Stock	70%	70%	70%	70%	70%	70%	70%	70%	70%	
CS Dividends	46,210	48,058	43,233	42,023	43,704	45,452	47,270	49,161	60,462	425,571
Foreign CS Dividends	32,432	33,729	30,343	29,493	30,673	31,900	33,176	34,503	42,435	298,685
Foreign CS Dividends	32,432	33,729	30,343	29,493	30,673	31,900	33,176	34,503	42,435	298,685
Less: Foreign Equity	-	-	-	-	-	-	-	-	-	106,979
Less: Additional Equity Investment	-	-	-	-	-	-	-	-	-	144,847
Foreign Net Cash Flow	32,432	33,729	30,343	29,493	30,673	31,900	33,176	34,503	42,435	46,859
Real Foreign Cash Flow	20,455	20,455	17,693	16,536	16,536	16,536	16,536	16,536	19,555	(53,658)
Foreign Real Return on Equity										

SIBERIAN GAS PROCESSING PLANT
Data and Key Results

TIMING DATA

Cost Estimate Month	Oct 93	First, Last Operation Month	Jan 96	Dec 15
Financial Closing Month	Jan 95	Economic Life	20.00	

ENGINEERING DATA

	1994	1995	1996	1997	1998	1999	2000	2001
Rated Capacity (BCM/yr)in 1996, 1998	2.14	4.28						
Stream Factor		-	100%	100%	100%	100%	100%	100%
Operations Partial Year Factor	-	-	1.000	1.000	1.000	100%	100%	100%
Wet Gas Processed (MCM)	-	-	2.14	2.14	4.28	4.28	4.28	4.28
Dry Gas Production (BCM)	-	-	1.80	1.91	3.76	3.76	3.76	3.76
NGL Production (MMTons)	-	-	0.36	0.49	1.07	1.07	1.07	1.07

REVENUE DATA (1996 $'s)

NGL Domestic Price ($/Ton)	84.82	Domestic Gas Price ($/MCM)	17.09
NGL Export Price ($/Ton)	180.00	Export Gas Price ($/MCM)	90.00
% NGL for Export	-	% Dry Gas for Export	100%

OPERATING COST DATA (1993 $000's)

Wet Gas Feedstock Cost ($/MCM)	-	
Chemicals Cost	382	
Utility Cost	19,432	
Maintenance Cost	985	
Labor Cost, Benefits	1,364	518
Other Expenses	10,134	

TRANSPORT COSTS (1996 $'s)

	DOM	EXP
Dry Gas In-Russia Costs ($/MCM)	-	40.00
Dry Gas Export Costs		32.00
NGL In-Russia Costs ($/Ton)	1.94	36.55
NGL Pipeline Costs	43.52	43.52
NGL Port Loading Charge		1.62
NGL Shipping Cost		15.10

CAPITAL COST DATA (1993 $000's)

	1995	1996	1997	Total
Gubkinsky GPP Expansion	43,700	157,500	90,300	291,500
Tarasovsky Gas Processing Plant	-	-	-	-
Gas Gathering Systems Cost	17,900	53,700	40,200	111,800
Metering Facilities Cost	440	1,290	970	2,700
Contributed Assets	9,841	22,263	11,638	43,742
Other Owners Costs	8,000	-	-	8,000
Infrastructure Costs	9,306	31,874	19,721	60,900
Initial Working Capital	2,839	-	-	2,839
Capital Costs	92,026	266,627	162,829	521,481

WORKING CAPITAL DATA

Days Receivables	45
Days Payables	45

FINANCING DATA

	WB/Other Loan	
% of Permanent Financing	70%	
Loan Amount, Commitment	420,859	420,875
Loan Interest Rate	8.15%	
Start of Repayment, Repayment Period	Jan 98	9.0
Commitment Fees %	0.25%	
Upfront Fee %	-	
Other Fin Fees & Close Costs (%, Amt)	-	

KEY RESULTS SUMMARY

Real Return on Investment (no taxes)	12.8%
Unleveraged Payback (Yrs)	5.5
Nominal NPV (Oct '93) @ 15.0%	34,192
Real Return on Equity	9.9%
Leveraged Payback (Yrs)	8.6
Nominal NPV (Oct '93) @ 15.0%	(13,150)
Min Debt Service Coverage	106%
Average Debt Service Coverage	139%

FINANCING DATA (cont'd)

	Actual
Required Reserves (1st Operating Yr)	39,337
Cash Flow Dedicated to Reserves	100%
Reinvestment Rate	3.0%

TAX DATA

Tax & Book In Service Month	Jan 96
Profits Tax	32.00%
15% Yr SL Property %	100.0%
Carryforward Years	5
VAT Tax (% of CapEx)	20.0%
Property Tax (% of Fixed Assets)	-
Road Tax (% of Revenues)	0.4%
Dry Gas Export Tariff ('93 $/MCM)	-
NGL Export Tariff ('93 $/Ton)	-

ECONOMIC DATA

Global Inflation Rate	2.8% **
Capital Cost Esc Rate	2.8%
O&M Esc Rate	2.8%
Export Gas Price Esc Rate	2.8%
Domestic Gas Price Esc Rate	2.8%
Export NGL Price Esc Rate	2.8%
Domestic NGL Price Esc Rate	2.8%

** Until 2000, 4% thereafter
(all escalation equivalent to inflation)

SENSITIVITY ANALYSIS FACTORS

O&M Cost	1.00
Gas Price	1.00
NGL Price	1.25
Capital Cost	1.00
Transport Cost	1.00
Wet Gas Price	1.00

129 7118

SIBERIAN GAS PROCESSING PLANT
Annual Sources and Uses of Funds During Construction

($US Thousands)

	1995	1996	1997	Total	%
SOURCES OF FUNDS					
World Bank/Other Loan	68,887	207,777	144,195	420,859	70%
SIBNG Cash Equity	-	-	-	-	-
PNG Cash Equity	-	-	-	-	-
Gasprom Cash Equity	4,921	11,132	5,819	21,871	4%
SIBNG Equity	4,921	11,132	5,819	21,871	4%
PNG Equity	4,921	11,132	5,819	21,871	4%
Foreign Equity	14,762	33,395	17,457	65,613	11%
JV Operating Cash Flow	-	22,258	26,885	49,143	8%
Total Sources of Funds	98,411	296,824	205,993	601,228	100%
USES OF FUNDS					
Gubkinsky GPP Expansion	45,950	169,606	99,266	314,821	
Tarasovsky Gas Processing Plant	-	-	-	-	
Gas Gathering Systems Cost	18,820	57,765	44,281	120,866	
Metering Facilities Costs	463	1,388	1,068	2,919	
Infrastructure Costs	9,785	34,314	21,692	65,791	
Contributed Assets	9,841	22,263	11,638	43,742	
Other Owners Costs	8,281	-	-	8,281	
Initial Working Capital	3,000	-	-	3,000	
Capital Costs	96,139	285,335	177,946	559,420	93%
Other Loan Interest	1,260	10,778	27,876	39,914	
Other Loan Commitment Fees	1,011	711	171	1,894	
Upfront Fees	-	-	-	-	
Financing Costs	2,272	11,489	28,047	41,808	7%
Total Uses of Funds	98,411	296,824	205,993	601,228	100%

	$	%
Total Debt	420,859	70%
Operating Cash	49,143	8%
Equity Requirement	131,226	22%
	601,228	100%

MEMORANDA	WB/Other Loan	
Loan Draws, Amount	420,859	
Standby Facility	-	
Constr Loan Draws + Standby, Commitment	420,859	420,875
Constr Loan Int Rate	8.15%	
Commitment Fee Rate	0.25%	
Upfront Fee Rate	-	
Other Financing Fees (%, Amt)	-	
Repayment Period	9.0	

** NOTE: ANNUAL SANDU STATEMENT IS FOR PRESENTATION ONLY. VALUES ARE FROM QUARTERLY CALCULATIONS.

VAT TAX FUNDING				
VAT Tax	15,003	52,614	33,262	100,879
VAT Recovery Expressed in $'s	435	8,945	30,692	40,072
Net VAT Payment	14,569	43,669	2,570	60,807
PNG Cash Equity for VAT	2,428	7,278	428	10,135
SNGP Cash Equity for VAT	2,428	7,278	428	10,135
Gasprom Cash Equity for VAT	2,428	7,278	428	10,135
Foreign Equity for VAT	7,284	21,834	1,285	30,404
Cash Equity for VAT	14,569	43,669	2,570	60,807

Equity Requirement	131,226
Equity for VAT	60,807
Total Equity	192,033

130

SIBERIAN GASS PROCESSING PLANT
Equity Returns

(Thousands)

	1994	1995	1996	1997	1998	1999	2000	2001	2002	2003	2004	2005	2006
EQUITY INVESTMENT													
SNGP Equity	-	7,349	18,410	6,247	-	-	-	-	-	-	-	-	-
PNG Equity	-	7,349	18,410	6,247	-	-	-	-	-	-	-	-	-
Gasprom Equity	-	7,349	18,410	6,247	-	-	-	-	-	-	-	-	-
Foreign Equity	-	22,046	55,229	18,741	-	-	-	-	-	-	-	-	-
Additional Equity	-	-	-	-	-	-	-	-	-	-	-	-	-
Total Equity	-	44,092	110,458	37,483	-	-	-	-	-	-	-	-	-
CUMULATIVE EQUITY INVESTMENT													
SNGP Equity Holdings	-	7,349	25,758	32,005	32,005	32,005	32,005	32,005	32,005	32,005	32,005	32,005	32,005
PNG Equity Holdings	-	7,349	25,758	32,005	32,005	32,005	32,005	32,005	32,005	32,005	32,005	32,005	32,005
Gasprom Equity Holdings	-	7,349	25,758	32,005	32,005	32,005	32,005	32,005	32,005	32,005	32,005	32,005	32,005
Foreign Equity Holdings	-	22,046	77,275	96,016	96,016	96,016	96,016	96,016	96,016	96,016	96,016	96,016	96,016
CS Equity Position	-	44,092	154,550	192,033	192,033	192,033	192,033	192,033	192,033	192,033	192,033	192,033	192,033
PROJECT RETURN ON EQUITY													
CS Dividends	-	-	-	-	-	-	17,313	19,087	26,084	32,767	34,830	32,974	47,693
Less: Equity Investment	-	44,092	110,458	37,483	-	-	-	-	-	-	-	-	-
Net Cash Flow	-	(44,092)	(110,458)	(37,483)	-	-	17,313	19,087	26,084	32,767	34,830	32,974	47,693
Cumulative	-	(44,092)	(154,550)	(192,033)	(192,033)	(192,033)	(174,720)	(155,632)	(129,549)	(96,782)	(61,952)	(28,977)	18,716
Real Net Cash Flow	-	(42,012)	(102,380)	(33,796)	-	-	14,369	15,232	20,015	24,176	24,710	22,493	31,283
Real Return on Equity	9.9%												

1720

SIBERIAN GASS PROCESSING PLANT
Equity Returns
(Thousands)

	1994	1995	1996	1997	1998	1999	2000	2001	2002	2003	2004	2005	2006
SNGP RETURNS													
SNGP Share of Common Stock		17%	17%	17%	17%	17%	17%	17%	17%	17%	17%	17%	17%
CS Dividends	-	-	-	-	-	-	17,313	19,087	26,084	32,767	34,830	32,974	47,693
SNGP CS Dividends		-	-	-	-	-	2,886	3,181	4,347	5,461	5,805	5,496	7,949
SNGP CS Dividends		-	-	-	-	-	2,886	3,181	4,347	5,461	5,805	5,496	7,949
Plus: SNGP NGL Pipeline Marginal Profit	-	-	-	-	-	-	-	-	-	-	-	-	-
Less: SNGP Equity	-	7,349	18,410	6,247	-	-	-	-	-	-	-	-	-
SNGP Net Cash Flow	-	(7,349)	(18,410)	(6,247)	-	-	2,886	3,181	4,347	5,461	5,805	5,496	7,949
Real SNGP Net Cash Flow	-	(7,002)	(17,063)	(5,633)	-	-	2,395	2,539	3,336	4,029	4,118	3,749	5,214
SNGP Real Return on Equity	9.9%												
PNG RETURNS													
PNG Share of Common Stock		17%	17%	17%	17%	17%	17%	17%	17%	17%	17%	17%	17%
CS Dividends	-	-	-	-	-	-	17,313	19,087	26,084	32,767	34,830	32,974	47,693
PNG CS Dividends		-	-	-	-	-	2,886	3,181	4,347	5,461	5,805	5,496	7,949
PNG CS Dividends		-	-	-	-	-	2,886	3,181	4,347	5,461	5,805	5,496	7,949
Plus: PNG Wet Gas Marginal Profit	-	-	-	-	-	-	-	-	-	-	-	-	-
Less: PNG Equity	-	7,349	18,410	6,247	-	-	-	-	-	-	-	-	-
PNG Net Cash Flow	-	(7,349)	(18,410)	(6,247)	-	-	2,886	3,181	4,347	5,461	5,805	5,496	7,949
Real PNG Net Cash Flow	-	(7,002)	(17,063)	(5,633)	-	-	2,395	2,539	3,336	4,029	4,118	3,749	5,214
PNG Real Return on Equity	9.9%												
GASPROM RETURNS													
Gasprom Share of Common Stock		17%	17%	17%	17%	17%	17%	17%	17%	17%	17%	17%	17%
CS Dividends	-	-	-	-	-	-	17,313	19,087	26,084	32,767	34,830	32,974	47,693
Gasprom CS Dividends		-	-	-	-	-	2,886	3,181	4,347	5,461	5,805	5,496	7,949
Gasprom CS Dividends		-	-	-	-	-	2,886	3,181	4,347	5,461	5,805	5,496	7,949
Plus: Gasprom Transport Marginal Profit	-	-	-	-	-	-	-	-	-	-	-	-	-
Less: Gasprom Equity	-	7,349	18,410	6,247	-	-	-	-	-	-	-	-	-
Gasprom Net Cash Flow	-	(7,349)	(18,410)	(6,247)	-	-	2,886	3,181	4,347	5,461	5,805	5,496	7,949
Real Gasprom Net Cash Flow	-	(7,002)	(17,063)	(5,633)	-	-	2,395	2,539	3,336	4,029	4,118	3,749	5,214
Gasprom Real Return on Equity	9.9%												
FOREIGN INVESTOR RETURNS													
Foreign Share of Common Stock		50%	50%	50%	50%	50%	50%	50%	50%	50%	50%	50%	50%
CS Dividends	-	-	-	-	-	-	17,313	19,087	26,084	32,767	34,830	32,974	47,693
Foreign CS Dividends		-	-	-	-	-	8,657	9,544	13,042	16,383	17,415	16,487	23,847
Foreign CS Dividends		-	-	-	-	-	8,657	9,544	13,042	16,383	17,415	16,487	23,847
Less: Foreign Equity	-	22,046	55,229	18,741	-	-	-	-	-	-	-	-	-
Less: Additional Equity Investment	-	-	-	-	-	-	-	-	-	-	-	-	-
Foreign Net Cash Flow	-	(22,046)	(55,229)	(18,741)	-	-	8,657	9,544	13,042	16,383	17,415	16,487	23,847
Real Foreign Cash Flow	-	(21,006)	(51,190)	(16,898)	-	-	7,184	7,616	10,007	12,088	12,355	11,247	15,641
Foreign Real Return on Equity	9.9%												

SIBERIAN GASS PROCESSING PLANT
Equity Returns

(Thousands)

	2007	2008	2009	2010	2011	2012	2013	2014	2015	Total
EQUITY INVESTMENT										
SNGP Equity	-	-	-	-	-	-	-	-	-	32,005
PNG Equity	-	-	-	-	-	-	-	-	-	32,005
Gasprom Equity	-	-	-	-	-	-	-	-	-	32,005
Foreign Equity	-	-	-	-	-	-	-	-	-	96,016
Additional Equity	-	-	-	-	-	-	-	-	-	-
Total Equity	-	-	-	-	-	-	-	-	-	192,033
CUMULATIVE EQUITY INVESTMENT										
SNGP Equity Holdings	32,005	32,005	32,005	32,005	32,005	32,005	32,005	32,005	32,005	
PNG Equity Holdings	32,005	32,005	32,005	32,005	32,005	32,005	32,005	32,005	32,005	
Gasprom Equity Holdings	32,005	32,005	32,005	32,005	32,005	32,005	32,005	32,005	32,005	
Foreign Equity Holdings	96,016	96,016	96,016	96,016	96,016	96,016	96,016	96,016	96,016	
CS Equity Position	192,033	192,033	192,033	192,033	192,033	192,033	192,033	192,033	192,033	
PROJECT RETURN ON EQUITY										
CS Dividends	71,939	74,817	77,810	80,922	84,159	87,525	91,026	94,667	116,430	990,045
Less: Equity Investment	-	-	-	-	-	-	-	-	-	192,033
Net Cash Flow	71,939	74,817	77,810	80,922	84,159	87,525	91,026	94,667	116,430	798,012
Cumulative	90,655	165,472	243,282	324,204	408,363	495,888	586,915	681,582	798,012	
Real Net Cash Flow	45,371	45,371	45,371	45,371	45,371	45,371	45,371	45,371	53,655	390,714
Real Return on Equity										

1722

133

SIBERIAN GASS PROCESSING PLANT
Equity Returns

(Thousands)

	2007	2008	2009	2010	2011	2012	2013	2014	2015	Total
SNGP RETURNS										
SNGP Share of Common Stock	17%	17%	17%	17%	17%	17%	17%	17%	17%	
CS Dividends	71,939	74,817	77,810	80,922	84,159	87,525	91,026	94,667	116,430	990,045
SNGP CS Dividends	11,990	12,470	12,968	13,487	14,026	14,588	15,171	15,778	19,405	165,007
SNGP CS Dividends	11,990	12,470	12,968	13,487	14,026	14,588	15,171	15,778	19,405	165,007
Plus: SNGP NGL Pipeline Marginal Profit	-	-	-	-	-	-	-	-	-	-
Less: SNGP Equity	-	-	-	-	-	-	-	-	-	32,005
SNGP Net Cash Flow	11,990	12,470	12,968	13,487	14,026	14,588	15,171	15,778	19,405	133,002
Real SNGP Net Cash Flow	7,562	7,562	7,562	7,562	7,562	7,562	7,562	7,562	8,942	65,119
SNGP Real Return on Equity										
PNG RETURNS										
PNG Share of Common Stock	17%	17%	17%	17%	17%	17%	17%	17%	17%	
CS Dividends	71,939	74,817	77,810	80,922	84,159	87,525	91,026	94,667	116,430	990,045
PNG CS Dividends	11,990	12,470	12,968	13,487	14,026	14,588	15,171	15,778	19,405	165,007
PNG CS Dividends	11,990	12,470	12,968	13,487	14,026	14,588	15,171	15,778	19,405	165,007
Plus: PNG Wet Gas Marginal Profit	-	-	-	-	-	-	-	-	-	-
Less: PNG Equity	-	-	-	-	-	-	-	-	-	32,005
PNG Net Cash Flow	11,990	12,470	12,968	13,487	14,026	14,588	15,171	15,778	19,405	133,002
Real PNG Net Cash Flow	7,562	7,562	7,562	7,562	7,562	7,562	7,562	7,562	8,942	65,119
PNG Real Return on Equity										
GASPROM RETURNS										
Gasprom Share of Common Stock	17%	17%	17%	17%	17%	17%	17%	17%	17%	
CS Dividends	71,939	74,817	77,810	80,922	84,159	87,525	91,026	94,667	116,430	990,045
Gasprom CS Dividends	11,990	12,470	12,968	13,487	14,026	14,588	15,171	15,778	19,405	165,007
Gasprom CS Dividends	11,990	12,470	12,968	13,487	14,026	14,588	15,171	15,778	19,405	165,007
Plus: Gasprom Transport Marginal Profit	-	-	-	-	-	-	-	-	-	-
Less: Gasprom Equity	-	-	-	-	-	-	-	-	-	32,005
Gasprom Net Cash Flow	11,990	12,470	12,968	13,487	14,026	14,588	15,171	15,778	19,405	133,002
Real Gasprom Net Cash Flow	7,562	7,562	7,562	7,562	7,562	7,562	7,562	7,562	8,942	65,119
Gasprom Real Return on Equity										
FOREIGN INVESTOR RETURNS										
Foreign Share of Common Stock	50%	50%	50%	50%	50%	50%	50%	50%	50%	
CS Dividends	71,939	74,817	77,810	80,922	84,159	87,525	91,026	94,667	116,430	990,045
Foreign CS Dividends	35,970	37,409	38,905	40,461	42,079	43,763	45,513	47,334	58,215	495,022
Foreign CS Dividends	35,970	37,409	38,905	40,461	42,079	43,763	45,513	47,334	58,215	495,022
Less: Foreign Equity	-	-	-	-	-	-	-	-	-	96,016
Less: Additional Equity Investment	-	-	-	-	-	-	-	-	-	-
Foreign Net Cash Flow	35,970	37,409	38,905	40,461	42,079	43,763	45,513	47,334	58,215	399,006
Real Foreign Cash Flow	22,686	22,686	22,686	22,686	22,686	22,686	22,686	22,686	26,827	195,357
Foreign Real Return on Equity										

134

SIBERIAN GAS PROCESSING PLANT
Data and Key Results

TIMING DATA

Cost Estimate Month	Oct 93	First, Last Operation Month	Jan 96 Dec 15
Financial Closing Month	Jan 95	Economic Life	20.00

ENGINEERING DATA

	1994	1995	1996	1997	1998	1999	2000	2001
Rated Capacity (BCM/yr)in 1996, 1998	2.14	4.28						
Stream Factor		-	100%	100%	100%	100%	100%	100%
Operations Partial Year Factor	-	-	1.000	1.000	1.000	100%	100%	100%
Wet Gas Processed (MCM)	-	-	2.14	2.14	4.28	4.28	4.28	4.28
Dry Gas Production (BCM)	-	-	1.80	1.91	3.76	3.76	3.76	3.76
NGL Production (MMTons)	-	-	0.36	0.49	1.07	1.07	1.07	1.07

REVENUE DATA (1996 $'s)

NGL Domestic Price ($/Ton)	50.89	Domestic Gas Price ($/MCM)	17.09
NGL Export Price ($/Ton)	108.00	Export Gas Price ($/MCM)	90.00
% NGL for Export	-	% Dry Gas for Export	100%

OPERATING COST DATA (1993 $000's)

Wet Gas Feedstock Cost ($/MCM)	-	
Chemicals Cost	382	
Utility Cost	19,432	
Maintenance Cost	985	
Labor Cost, Benefits	1,364	518
Other Expenses	10,134	

TRANSPORT COSTS (1996 $'s)

	DOM	EXP
Dry Gas In-Russia Costs ($/MCM)	-	40.00
Dry Gas Export Costs		32.00
NGL In-Russia Costs ($/Ton)	1.94	36.55
NGL Pipeline Costs	43.52	43.52
NGL Port Loading Charge		1.62
NGL Shipping Cost		15.10

CAPITAL COST DATA (1993 $000's)

	1995	1996	1997	Total
Gubkinsky GPP Expansion	43,700	157,500	90,300	291,500
Tarasovsky Gas Processing Plant	-	-	-	-
Gas Gathering Systems Cost	17,900	53,700	40,200	111,800
Metering Facilities Cost	440	1,290	970	2,700
Contributed Assets	9,842	24,744	15,686	50,272
Other Owners Costs	8,000	-	-	8,000
Infrastructure Costs	9,306	31,874	19,721	60,900
Initial Working Capital	2,839	-	-	2,839
Capital Costs	92,027	269,108	166,876	528,011

WORKING CAPITAL DATA

Days Receivables	45
Days Payables	45

FINANCING DATA

	WB/Other Loan	
% of Permanent Financing	70%	
Loan Amount, Commitment	425,647	425,650
Loan Interest Rate	8.15%	
Start of Repayment, Repayment Period	Jan 98	9.0
Commitment Fees %	0.25%	
Upfront Fee %	-	
Other Fin Fees & Close Costs (%, Amt)	-	

KEY RESULTS SUMMARY

Real Return on Investment (no taxes)		3.6%
Unleveraged Payback (Yrs)		10.2
Nominal NPV (Oct '93) @	15.0%	(137277)
Real Return on Equity		(2.7%)
Leveraged Payback (Yrs)		17.2
Nominal NPV (Oct '93) @	15.0%	(151854)
Min Debt Service Coverage		60%
Average Debt Service Coverage		74%

FINANCING DATA (cont'd)

	Actual
Required Reserves (1st Operating Yr)	39,784
Cash Flow Dedicated to Reserves	100%
Reinvestment Rate	3.0%

TAX DATA

Tax & Book In Service Month	Jan 96
Profits Tax	32.00%
15% Yr SL Property %	100.0%
Carryforward Years	5
VAT Tax (% of CapEx)	20.0%
Property Tax (% of Fixed Assets)	-
Road Tax (% of Revenues)	0.4%
Dry Gas Export Tariff ('93 $/MCM)	-
NGL Export Tariff ('93 $/Ton)	-

ECONOMIC DATA

Global Inflation Rate	2.8% **
Capital Cost Esc Rate	2.8%
O&M Esc Rate	2.8%
Export Gas Price Esc Rate	2.8%
Domestic Gas Price Esc Rate	2.8%
Export NGL Price Esc Rate	2.8%
Domestic NGL Price Esc Rate	2.8%

** Until 2000, 4% thereafter
(all escalation equivalent to inflation)

SENSITIVITY ANALYSIS FACTORS

O&M Cost	1.00
Gas Price	1.00
NGL Price	0.75
Capital Cost	1.00
Transport Cost	1.00
Wet Gas Price	1.00

SIBERIAN GAS PROCESSING PLANT
Annual Sources and Uses of Funds During Construction

($US Thousands)

	1995	1996	1997	Total	%
SOURCES OF FUNDS					
World Bank/Other Loan	68,897	209,558	147,193	425,647	70%
SIBNG Cash Equity	-	-	-	-	-
PNG Cash Equity	-	-	-	-	-
Gasprom Cash Equity	4,921	12,372	7,843	25,136	4%
SIBNG Equity	4,921	12,372	7,843	25,136	4%
PNG Equity	4,921	12,372	7,843	25,136	4%
Foreign Equity	14,764	37,115	23,528	75,407	12%
JV Operating Cash Flow	-	15,580	16,026	31,606	5%
Total Sources of Funds	98,424	299,368	210,275	608,067	100%
USES OF FUNDS					
Gubkinsky GPP Expansion	45,950	169,606	99,266	314,821	
Tarasovsky Gas Processing Plant	-	-	-	-	
Gas Gathering Systems Cost	18,820	57,765	44,281	120,866	
Metering Facilities Costs	463	1,388	1,068	2,919	
Infrastructure Costs	9,785	34,314	21,692	65,791	
Contributed Assets	9,842	24,744	15,686	50,272	
Other Owners Costs	8,281	-	-	8,281	
Initial Working Capital	3,000	-	-	3,000	
Capital Costs	96,140	287,816	181,994	565,950	93%
Other Loan Interest	1,260	10,831	28,106	40,197	
Other Loan Commitment Fees	1,023	721	176	1,920	
Upfront Fees	-	-	-	-	
Financing Costs	2,284	11,552	28,282	42,118	7%
Total Uses of Funds	98,424	299,368	210,275	608,067	100%

	$	%
Total Debt	425,647	70%
Operating Cash	31,606	5%
Equity Requirement	150,814	25%
	608,067	100%

MEMORANDA	WB/Other Loan	
Loan Draws, Amount	425,647	
Standby Facility	-	
Constr Loan Draws + Standby, Commitment	425,647	425,650
Constr Loan Int Rate	8.15%	
Commitment Fee Rate	0.25%	
Upfront Fee Rate	-	
Other Financing Fees (%, Amt)	-	
Repayment Period	9.0	

** NOTE: ANNUAL SANDU STATEMENT IS FOR PRESENTATION ONLY. VALUES ARE FROM QUARTERLY CALCULATIONS.

VAT TAX FUNDING				
VAT Tax	15,003	52,614	33,262	100,879
VAT Recovery Expressed in $'s	435	8,945	30,692	40,072
Net VAT Payment	14,569	43,669	2,570	60,807
PNG Cash Equity for VAT	2,428	7,278	428	10,135
SNGP Cash Equity for VAT	2,428	7,278	428	10,135
Gasprom Cash Equity for VAT	2,428	7,278	428	10,135
Foreign Equity for VAT	7,284	21,834	1,285	30,404
Cash Equity for VAT	14,569	43,669	2,570	60,807

Equity Requirement	150,814
Equity for VAT	60,807
Total Equity	211,622

SIBERIAN GASS PROCESSING PLANT
Equity Returns

(Thousands)

	1994	1995	1996	1997	1998	1999	2000	2001	2002	2003	2004	2005	2006
EQUITY INVESTMENT													
SNGP Equity	-	7,349	19,650	8,271	-	-	-	-	-	-	-	-	-
PNG Equity	-	7,349	19,650	8,271	-	-	-	-	-	-	-	-	-
Gasprom Equity	-	7,349	19,650	8,271	-	-	-	-	-	-	-	-	-
Foreign Equity	-	22,048	58,950	24,813	-	-	-	-	-	-	-	-	-
Additional Equity	-	-	-	-	31,870	14,257	20,814	26,147	20,717	15,219	9,652	10,974	6,174
Total Equity	-	44,096	117,900	49,626	31,870	14,257	20,814	26,147	20,717	15,219	9,652	10,974	6,174
CUMULATIVE EQUITY INVESTMENT													
SNGP Equity Holdings	-	7,349	26,999	35,270	35,270	35,270	35,270	35,270	35,270	35,270	35,270	35,270	35,270
PNG Equity Holdings	-	7,349	26,999	35,270	35,270	35,270	35,270	35,270	35,270	35,270	35,270	35,270	35,270
Gasprom Equity Holdings	-	7,349	26,999	35,270	35,270	35,270	35,270	35,270	35,270	35,270	35,270	35,270	35,270
Foreign Equity Holdings	-	22,048	80,998	105,811	137,681	151,938	172,751	198,898	219,614	234,834	244,486	255,460	261,634
CS Equity Position	-	44,096	161,996	211,622	243,492	257,749	278,562	304,709	325,425	340,645	350,297	361,271	367,445
PROJECT RETURN ON EQUITY													
CS Dividends	-	-	-	-	-	-	-	-	-	-	-	-	-
Less: Equity Investment	-	44,096	117,900	49,626	31,870	14,257	20,814	26,147	20,717	15,219	9,652	10,974	6,174
Net Cash Flow	-	(44,096)	(117,900)	(49,626)	(31,870)	(14,257)	(20,814)	(26,147)	(20,717)	(15,219)	(9,652)	(10,974)	(6,174)
Cumulative	-	(44,096)	(161,996)	(211,622)	(243,492)	(257,749)	(278,562)	(304,709)	(325,425)	(340,645)	(350,297)	(361,271)	(367,445)
Real Net Cash Flow	-	(42,016)	(109,278)	(44,744)	(27,952)	(12,164)	(17,274)	(20,865)	(15,896)	(11,229)	(6,847)	(7,486)	(4,049)
Real Return on Equity	(2.7%)												

1726

137

SIBERIAN GAS PROCESSING PLANT
Data and Key Results

TIMING DATA

Cost Estimate Month	Oct 93	First, Last Operation Month	Jan 96 Dec 15
Financial Closing Month	Jan 95	Economic Life	20.00

ENGINEERING DATA

	1994	1995	1996	1997	1998	1999	2000	2001
Rated Capacity (BCM/yr)in 1996, 1998	2.14	4.28						
Stream Factor	-	-	100%	100%	100%	100%	100%	100%
Operations Partial Year Factor	-	-	1.000	1.000	1.000	100%	100%	100%
Wet Gas Processed (MCM)	-	-	2.14	2.14	4.28	4.28	4.28	4.28
Dry Gas Production (BCM)	-	-	1.80	1.91	3.76	3.76	3.76	3.76
NGL Production (MMTons)	-	-	0.36	0.49	1.07	1.07	1.07	1.07

REVENUE DATA (1996 $'s)

NGL Domestic Price ($/Ton)	67.86	Domestic Gas Price ($/MCM)	17.09
NGL Export Price ($/Ton)	144.00	Export Gas Price ($/MCM)	90.00
% NGL for Export	100%	% Dry Gas for Export	100%

OPERATING COST DATA (1993 $000's)

Wet Gas Feedstock Cost ($/MCM)	-	
Chemicals Cost	382	
Utility Cost	19,432	
Maintenance Cost	985	
Labor Cost, Benefits	1,364	518
Other Expenses	10,134	

TRANSPORT COSTS (1996 $'s)

	DOM	EXP
Dry Gas In-Russia Costs ($/MCM)	-	40.00
Dry Gas Export Costs		32.00
NGL In-Russia Costs ($/Ton)	1.94	36.55
NGL Pipeline Costs	43.52	43.52
NGL Port Loading Charge		1.62
NGL Shipping Cost		15.10

CAPITAL COST DATA (1993 $000's)

	1995	1996	1997	Total
Gubkinsky GPP Expansion	54,625	196,875	112,875	364,375
Tarasovsky Gas Processing Plant	-	-	-	-
Gas Gathering Systems Cost	22,375	67,125	50,250	139,750
Metering Facilities Cost	550	1,613	1,213	3,375
Contributed Assets	12,218	28,918	15,723	56,859
Other Owners Costs	10,000	-	-	10,000
Infrastructure Costs	11,633	39,842	24,651	76,125
Initial Working Capital	2,839	-	-	2,839
Capital Costs	114,240	334,372	204,711	653,323

WORKING CAPITAL DATA

Days Receivables	45
Days Payables	45

FINANCING DATA

	WB/Other Loan	
% of Permanent Financing	70%	
Loan Amount, Commitment	527,091	527,091
Loan Interest Rate	8.15%	
Start of Repayment, Repayment Period	Jan 98	9.0
Commitment Fees %	0.25%	
Upfront Fee %	-	
Other Fin Fees & [redacted] Costs (%, Amt)	-	

KEY RESULTS SUMMARY

Real Return on Investment (no taxes)	10.9%
Unleveraged Payback (Yrs)	6.1
Nominal NPV (Oct '93) @ 15.0%	(6,057)
Real Return on Equity	7.4%
Leveraged Payback (Yrs)	9.8
Nominal NPV (Oct '93) @ 15.0%	(53,945)
Min Debt Service Coverage	95%
Average Debt Service Coverage	127%

FINANCING DATA (cont'd)

	Actual
Required Reserves (1st Operating Yr)	49,266
Cash Flow Dedicated to Reserves	100%
Reinvestment Rate	3.0%

TAX DATA

Tax & Book In Service Month	Jan 96
Profits Tax	32.00%
15% Yr SL Property %	100.0%
Carryforward Years	5
VAT Tax (% of CapEx)	20.0%
Property Tax (% of Fixed Assets)	-
Road Tax (% of Revenues)	0.4%
Dry Gas Export Tariff ('93 $/MCM)	-
NGL Export Tariff ('93 $/Ton)	-

ECONOMIC DATA

Global Inflation Rate	2.8% **
Capital Cost Esc Rate	2.8%
O&M Esc Rate	2.8%
Export Gas Price Esc Rate	2.8%
Domestic Gas Price Esc Rate	2.8%
Export NGL Price Esc Rate	2.8%
Domestic NGL Price Esc Rate	2.8%

** Until 2000, 4% thereafter
(all escalation equivalent to inflation)

SENSITIVITY ANALYSIS FACTORS

O&M Cost	1.00
Gas Price	1.00
NGL Price	1.00
Capital Cost	1.25
Transport Cost	1.00
Wet Gas Price	1.00

SIBERIAN GAS PROCESSING PLANT
Annual Sources and Uses of Funds During Construction

($US Thousands)

	1995	1996	1997	Total	%
SOURCES OF FUNDS					
Vorld Bank/Other Loan	85,528	260,469	181,094	527,091	70%
SIBNG Cash Equity	-	-	-	-	-
NG Cash Equity	-	-	-	-	-
Gasprom Cash Equity	6,109	14,459	7,861	28,429	4%
SIBNG Equity	6,109	14,459	7,861	28,429	4%
NG Equity	6,109	14,459	7,861	28,429	4%
Foreign Equity	18,327	43,377	23,584	85,288	11%
JV Operating Cash Flow	-	24,876	30,444	55,319	7%
Total Sources of Funds	122,183	372,098	258,706	752,987	100%
USES OF FUNDS					
Gubkinsky GPP Expansion	57,437	212,007	124,083	393,526	
Tarasovsky Gas Processing Plant	-	-	-	-	
Gas Gathering Systems Cost	23,525	72,206	55,351	151,082	
Metering Facilities Costs	578	1,734	1,336	3,648	
Infrastructure Costs	12,231	42,892	27,115	82,239	
Contributed Assets	12,218	28,918	15,723	56,859	
Other Owners Costs	10,351	-	-	10,351	
Initial Working Capital	3,000	-	-	3,000	
Capital Costs	119,341	357,757	223,608	700,706	93%
Other Loan Interest	1,575	13,449	34,883	49,907	
Other Loan Commitment Fees	1,267	892	215	2,374	
Upfront Fees	-	-	-	-	
Financing Costs	2,842	14,341	35,099	52,281	7%
Total Uses of Funds	122,183	372,098	258,706	752,987	100%

	$	%
Total Debt	527,091	70%
Operating Cash	55,319	7%
Equity Requirement	170,577	23%
	752,987	100%

MEMORANDA	WB/Other Loan	
Loan Draws, Amount	527,091	
Standby Facility	-	
Constr Loan Draws + Standby, Commitment	527,091	527,091
Constr Loan Int Rate	8.15%	
Commitment Fee Rate	0.25%	
Upfront Fee Rate	-	
Other Financing Fees (%, Amt)	-	
Repayment Period	9.0	

** NOTE: ANNUAL SANDU STATEMENT IS FOR PRESENTATION ONLY. VALUES ARE FROM QUARTERLY CALCULATIONS.

VAT TAX FUNDING				
VAT Tax	18,754	65,768	41,577	126,099
VAT Recovery Expressed in $'s	543	11,182	38,365	50,090
Net VAT Payment	18,211	54,586	3,212	76,009
NG Cash Equity for VAT	3,035	9,098	535	12,668
SNGP Cash Equity for VAT	3,035	9,098	535	12,668
Gasprom Cash Equity for VAT	3,035	9,098	535	12,668
Foreign Equity for VAT	9,105	27,293	1,606	38,005
Cash Equity for VAT	18,211	54,586	3,212	76,009

Equity Requirement	170,577
Equity for VAT	76,009
Total Equity	246,586

REVISED CASE 1B.1: Wet Gas = $0; Expected Tax; Capital Cost @ +25%

SIBERIAN GAS PROCESSING PLANT
Equity Returns

(Thousands)

	1994	1995	1996	1997	1998	1999	2000	2001	2002	2003	2004	2005	2006
EQUITY INVESTMENT													
SNGP Equity	-	9,144	23,557	8,397	-	-	-	-	-	-	-	-	-
PNG Equity	-	9,144	23,557	8,397	-	-	-	-	-	-	-	-	-
Gasprom Equity	-	9,144	23,557	8,397	-	-	-	-	-	-	-	-	-
Foreign Equity	-	27,433	70,670	25,190	-	-	-	-	-	-	-	-	-
Additional Equity	-	-	-	-	4,507	-	-	-	-	-	-	-	-
Total Equity	-	54,866	141,340	50,380	4,507	-	-	-	-	-	-	-	-
CUMULATIVE EQUITY INVESTMENT													
SNGP Equity Holdings	-	9,144	32,701	41,098	41,098	41,098	41,098	41,098	41,098	41,098	41,098	41,098	41,098
PNG Equity Holdings	-	9,144	32,701	41,098	41,098	41,098	41,098	41,098	41,098	41,098	41,098	41,098	41,098
Gasprom Equity Holdings	-	9,144	32,701	41,098	41,098	41,098	41,098	41,098	41,098	41,098	41,098	41,098	41,098
Foreign Equity Holdings	-	27,433	98,103	123,293	127,800	127,800	127,800	127,800	127,800	127,800	127,800	127,800	127,800
CS Equity Position	-	54,866	196,206	246,586	251,093	251,093	251,093	251,093	251,093	251,093	251,093	251,093	251,093
PROJECT RETURN ON EQUITY													
CS Dividends	-	-	-	-	-	-	-	4,892	20,413	28,853	32,515	29,728	65,635
Less: Equity Investment	-	54,866	141,340	50,380	4,507	-	-	-	-	-	-	-	-
Net Cash Flow	-	(54,866)	(141,340)	(50,380)	(4,507)	-	-	4,892	20,413	28,853	32,515	29,728	65,635
Cumulative	-	(54,866)	(196,206)	(246,586)	(251,093)	(251,093)	(251,093)	(246,201)	(225,788)	(196,936)	(164,421)	(134,693)	(69,058)
Real Net Cash Flow	-	(52,277)	(131,004)	(45,424)	(3,953)	-	-	3,904	15,663	21,288	23,067	20,279	43,051
Real Return on Equity	7.4%												

140

SIBERIAN GAS PROCESSING PLANT
Equity Returns

(Thousands)

	1994	1995	1996	1997	1998	1999	2000	2001	2002	2003	2004	2005	2006
SNGP RETURNS													
SNGP Share of Common Stock		17%	17%	17%	16%	16%	16%	16%	16%	16%	16%	16%	16%
CS Dividends	-	-	-	-	-	-	-	4,892	20,413	28,853	32,515	29,728	65,635
SNGP CS Dividends		-	-	-	-	-	-	801	3,341	4,722	5,322	4,866	10,743
SNGP CS Dividends		-	-	-	-	-	-	801	3,341	4,722	5,322	4,866	10,743
Plus: SNGP NGL Pipeline Marginal Profit	-	-	-	-	-	-	-	-	-	-	-	-	-
Less: SNGP Equity	-	9,144	23,557	8,397	-	-	-	-	-	-	-	-	-
SNGP Net Cash Flow	-	(9,144)	(23,557)	(8,397)	-	-	-	801	3,341	4,722	5,322	4,866	10,743
Real SNGP Net Cash Flow	-	(8,713)	(21,834)	(7,571)	-	-	-	639	2,564	3,484	3,775	3,319	7,046
SNGP Real Return on Equity	7.4%												
PNG RETURNS													
PNG Share of Common Stock		17%	17%	17%	16%	16%	16%	16%	16%	16%	16%	16%	16%
CS Dividends	-	-	-	-	-	-	-	4,892	20,413	28,853	32,515	29,728	65,635
PNG CS Dividends		-	-	-	-	-	-	801	3,341	4,722	5,322	4,866	10,743
PNG CS Dividends		-	-	-	-	-	-	801	3,341	4,722	5,322	4,866	10,743
Plus: PNG Wet Gas Marginal Profit	-	-	-	-	-	-	-	-	-	-	-	-	-
Less: PNG Equity	-	9,144	23,557	8,397	-	-	-	-	-	-	-	-	-
PNG Net Cash Flow	-	(9,144)	(23,557)	(8,397)	-	-	-	801	3,341	4,722	5,322	4,866	10,743
Real PNG Net Cash Flow	-	(8,713)	(21,834)	(7,571)	-	-	-	639	2,564	3,484	3,775	3,319	7,046
PNG Real Return on Equity	7.4%												
GASPROM RETURNS													
Gasprom Share of Common Stock		17%	17%	17%	16%	16%	16%	16%	16%	16%	16%	16%	16%
CS Dividends	-	-	-	-	-	-	-	4,892	20,413	28,853	32,515	29,728	65,635
Gasprom CS Dividends		-	-	-	-	-	-	801	3,341	4,722	5,322	4,866	10,743
Gasprom CS Dividends		-	-	-	-	-	-	801	3,341	4,722	5,322	4,866	10,743
Plus: Gasprom Transport Marginal Profit	-	-	-	-	-	-	-	-	-	-	-	-	-
Less: Gasprom Equity	-	9,144	23,557	8,397	-	-	-	-	-	-	-	-	-
Gasprom Net Cash Flow	-	(9,144)	(23,557)	(8,397)	-	-	-	801	3,341	4,722	5,322	4,866	10,743
Real Gasprom Net Cash Flow	-	(8,713)	(21,834)	(7,571)	-	-	-	639	2,564	3,484	3,775	3,319	7,046
Gasprom Real Return on Equity	7.4%												
FOREIGN INVESTOR RETURNS													
Foreign Share of Common Stock		50%	50%	50%	51%	51%	51%	51%	51%	51%	51%	51%	51%
CS Dividends	-	-	-	-	-	-	-	4,892	20,413	28,853	32,515	29,728	65,635
Foreign CS Dividends		-	-	-	-	-	-	2,490	10,389	14,685	16,549	15,131	33,407
Foreign CS Dividends		-	-	-	-	-	-	2,490	10,389	14,685	16,549	15,131	33,407
Less: Foreign Equity	-	27,433	70,670	25,190	-	-	-	-	-	-	-	-	-
Less: Additional Equity Investment	-	-	-	-	4,507	-	-	-	-	-	-	-	-
Foreign Net Cash Flow	-	(27,433)	(70,670)	(25,190)	(4,507)	-	-	2,490	10,389	14,685	16,549	15,131	33,407
Real Foreign Cash Flow	-	(26,139)	(65,502)	(22,712)	(3,953)	-	-	1,987	7,972	10,835	11,741	10,322	21,912
Foreign Real Return on Equity	7.4%												

141
1730

REVISED CASE 1B.1: Wet Gas = $0; Expected Tax; Capital Cost @ +25%

SIBERIAN GAS PROCESSING PLANT
Equity Returns

(Thousands)

	2007	2008	2009	2010	2011	2012	2013	2014	2015	Total
EQUITY INVESTMENT										
SNGP Equity	-	-	-	-	-	-	-	-	-	41,098
PNG Equity	-	-	-	-	-	-	-	-	-	41,098
Gasprom Equity	-	-	-	-	-	-	-	-	-	41,098
Foreign Equity	-	-	-	-	-	-	-	-	-	123,293
Additional Equity	-	-	-	-	-	-	-	-	-	4,507
Total Equity	-	-	-	-	-	-	-	-	-	251,093
CUMULATIVE EQUITY INVESTMENT										
SNGP Equity Holdings	41,098	41,098	41,098	41,098	41,098	41,098	41,098	41,098	41,098	
PNG Equity Holdings	41,098	41,098	41,098	41,098	41,098	41,098	41,098	41,098	41,098	
Gasprom Equity Holdings	41,098	41,098	41,098	41,098	41,098	41,098	41,098	41,098	41,098	
Foreign Equity Holdings	127,800	127,800	127,800	127,800	127,800	127,800	127,800	127,800	127,800	
CS Equity Position	251,093	251,093	251,093	251,093	251,093	251,093	251,093	251,093	251,093	
PROJECT RETURN ON EQUITY										
CS Dividends	84,020	83,181	86,508	89,969	93,567	97,310	101,203	105,251	129,446	1,052,489
Less: Equity Investment	-	-	-	-	-	-	-	-	-	251,093
Net Cash Flow	84,020	83,181	86,508	89,969	93,567	97,310	101,203	105,251	129,446	801,396
Cumulative	14,962	98,143	184,651	274,620	368,187	465,497	566,700	671,950	801,396	
Real Net Cash Flow	52,990	50,443	50,443	50,443	50,443	50,443	50,443	50,443	59,653	360,341
Real Return on Equity										

SIBERIAN GAS PROCESSING PLANT
Equity Returns

(Thousands)

	2007	2008	2009	2010	2011	2012	2013	2014	2015	Total
SNGP RETURNS										
SNGP Share of Common Stock	16%	16%	16%	16%	16%	16%	16%	16%	16%	
CS Dividends	84,020	83,181	86,508	89,969	93,567	97,310	101,203	105,251	129,446	1,052,489
SNGP CS Dividends	13,752	13,615	14,159	14,726	15,315	15,927	16,564	17,227	21,187	172,266
SNGP CS Dividends	13,752	13,615	14,159	14,726	15,315	15,927	16,564	17,227	21,187	172,266
Plus: SNGP NGL Pipeline Marginal Profit	-	-	-	-	-	-	-	-	-	-
Less: SNGP Equity	-	-	-	-	-	-	-	-	-	41,098
SNGP Net Cash Flow	13,752	13,615	14,159	14,726	15,315	15,927	16,564	17,227	21,187	131,169
Real SNGP Net Cash Flow	8,673	8,256	8,256	8,256	8,256	8,256	8,256	8,256	9,764	58,942
SNGP Real Return on Equity										
PNG RETURNS										
PNG Share of Common Stock	16%	16%	16%	16%	16%	16%	16%	16%	16%	
CS Dividends	84,020	83,181	86,508	89,969	93,567	97,310	101,203	105,251	129,446	1,052,489
PNG CS Dividends	13,752	13,615	14,159	14,726	15,315	15,927	16,564	17,227	21,187	172,266
PNG CS Dividends	13,752	13,615	14,159	14,726	15,315	15,927	16,564	17,227	21,187	172,266
Plus: PNG Wet Gas Marginal Profit	-	-	-	-	-	-	-	-	-	-
Less: PNG Equity	-	-	-	-	-	-	-	-	-	41,098
PNG Net Cash Flow	13,752	13,615	14,159	14,726	15,315	15,927	16,564	17,227	21,187	131,169
Real PNG Net Cash Flow	8,673	8,256	8,256	8,256	8,256	8,256	8,256	8,256	9,764	58,942
PNG Real Return on Equity										
GASPROM RETURNS										
Gasprom Share of Common Stock	16%	16%	16%	16%	16%	16%	16%	16%	16%	
CS Dividends	84,020	83,181	86,508	89,969	93,567	97,310	101,203	105,251	129,446	1,052,489
Gasprom CS Dividends	13,752	13,615	14,159	14,726	15,315	15,927	16,564	17,227	21,187	172,266
Gasprom CS Dividends	13,752	13,615	14,159	14,726	15,315	15,927	16,564	17,227	21,187	172,266
Plus: Gasprom Transport Marginal Profit	-	-	-	-	-	-	-	-	-	-
Less: Gasprom Equity	-	-	-	-	-	-	-	-	-	41,098
Gasprom Net Cash Flow	13,752	13,615	14,159	14,726	15,315	15,927	16,564	17,227	21,187	131,169
Real Gasprom Net Cash Flow	8,673	8,256	8,256	8,256	8,256	8,256	8,256	8,256	9,764	58,942
Gasprom Real Return on Equity										
FOREIGN INVESTOR RETURNS										
Foreign Share of Common Stock	51%	51%	51%	51%	51%	51%	51%	51%	51%	
CS Dividends	84,020	83,181	86,508	89,969	93,567	97,310	101,203	105,251	129,446	1,052,489
Foreign CS Dividends	42,764	42,337	44,031	45,792	47,623	49,528	51,510	53,570	65,885	535,691
Foreign CS Dividends	42,764	42,337	44,031	45,792	47,623	49,528	51,510	53,570	65,885	535,691
Less: Foreign Equity	-	-	-	-	-	-	-	-	-	123,293
Less: Additional Equity Investment	-	-	-	-	-	-	-	-	-	4,507
Foreign Net Cash Flow	42,764	42,337	44,031	45,792	47,623	49,528	51,510	53,570	65,885	407,891
Real Foreign Cash Flow	26,971	25,674	25,674	25,674	25,674	25,674	25,674	25,674	30,362	183,516
Foreign Real Return on Equity										

143

SIBERIAN GAS PROCESSING PLANT
Data and Key Results

TIMING DATA

Cost Estimate Month	Oct 93	First, Last Operation Month	Jan 96	Dec 15
Financial Closing Month	Jan 95	Economic Life	20.00	

ENGINEERING DATA

	1994	1995	1996	1997	1998	1999	2000	2001
Rated Capacity (BCM/yr)in 1996, 1998	2.14	4.28						
Stream Factor		-	100%	100%	100%	100%	100%	100%
Operations Partial Year Factor	-	-	1.000	1.000	1.000	100%	100%	100%
Wet Gas Processed (MCM)	-	-	2.14	2.14	4.28	4.28	4.28	4.28
Dry Gas Production (BCM)	-	-	1.80	1.91	3.76	3.76	3.76	3.76
NGL Production (MMTons)	-	-	0.36	0.49	1.07	1.07	1.07	1.07

REVENUE DATA (1996 $'s)

NGL Domestic Price ($/Ton)	67.86	Domestic Gas Price ($/MCM)	17.09
NGL Export Price ($/Ton)	144.00	Export Gas Price ($/MCM)	90.00
% NGL for Export	100%	% Dry Gas for Export	100%

OPERATING COST DATA (1993 $000's)

Wet Gas Feedstock Cost ($/MCM)	-	
Chemicals Cost	382	
Utility Cost	19,432	
Maintenance Cost	985	
Labor Cost, Benefits	1,364	518
Other Expenses	10,134	

TRANSPORT COSTS (1996 $'s)

	DOM	EXP
Dry Gas In-Russia Costs ($/MCM)	-	40.00
Dry Gas Export Costs		32.00
NGL In-Russia Costs ($/Ton)	1.94	36.55
NGL Pipeline Costs	43.52	43.52
NGL Port Loading Charge		1.62
NGL Shipping Cost		15.10

CAPITAL COST DATA (1993 $000's)

	1995	1996	1997	Total
Gubkinsky GPP Expansion	32,775	118,125	67,725	218,625
Tarasovsky Gas Processing Plant	-	-	-	-
Gas Gathering Systems Cost	13,425	40,275	30,150	83,850
Metering Facilities Cost	330	968	728	2,025
Contributed Assets	7,463	14,491	5,730	27,684
Other Owners Costs	6,000	-	-	6,000
Infrastructure Costs	6,980	23,905	14,790	45,675
Initial Working Capital	2,839	-	-	2,839
Capital Costs	69,812	197,764	119,123	386,698

WORKING CAPITAL DATA

Days Receivables	45
Days Payables	45

FINANCING DATA

	WB/Other	Loan
% of Permanent Financing	70%	
Loan Amount, Commitment	312,471	312,472
Loan Interest Rate	8.15%	
Start of Repayment, Repayment Period	Jan 98	9.0
Commitment Fees %	0.25%	
Upfront Fee %	-	
Other Fin Fees & [redacted] Costs (%, Amt)	-	

KEY RESULTS SUMMARY

Real Return on Investment (no taxes)	20.4%
Unleveraged Payback (Yrs)	3.6
Nominal NPV (Oct '93) @ 15.0%	153,782
Real Return on Equity	20.9%
Leveraged Payback (Yrs)	3.7
Nominal NPV (Oct '93) @ 15.0%	86,107
Min Debt Service Coverage	151%
Average Debt Service Coverage	190%

FINANCING DATA (cont'd)

	Actual
Required Reserves (1st Operating Yr)	29,206
Cash Flow Dedicated to Reserves	100%
Reinvestment Rate	3.0%

TAX DATA

Tax & Book In Service Month	Jan 96
Profits Tax	32.00%
15% Yr SL Property %	100.0%
Carryforward Years	5
VAT Tax (% of CapEx)	20.0%
Property Tax (% of Fixed Assets)	-
Road Tax (% of Revenues)	0.4%
Dry Gas Export Tariff ('93 $/MCM)	-
NGL Export Tariff ('93 $/Ton)	-

ECONOMIC DATA

Global Inflation Rate	2.8% **
Capital Cost Esc Rate	2.8%
O&M Esc Rate	2.8%
Export Gas Price Esc Rate	2.8%
Domestic Gas Price Esc Rate	2.8%
Export NGL Price Esc Rate	2.8%
Domestic NGL Price Esc Rate	2.8%

** Until 2000, 4% thereafter
(all escalation equivalent to inflation)

SENSITIVITY ANALYSIS FACTORS

O&M Cost	1.00
Gas Price	1.00
NGL Price	1.00
Capital Cost	0.75
Transport Cost	1.00
Wet Gas Price	1.00

SIBERIAN GAS PROCESSING PLANT
Annual Sources and Uses of Funds During Construction

($US Thousands)

	1995	1996	1997	Total	%
SOURCES OF FUNDS					
World Bank/Other Loan	52,243	154,283	105,946	312,471	70%
SIBNG Cash Equity	-	-	-	-	-
PNG Cash Equity	-	-	-	-	-
Gasprom Cash Equity	3,732	7,245	2,865	13,842	3%
SIBNG Equity	3,732	7,245	2,865	13,842	3%
PNG Equity	3,732	7,245	2,865	13,842	3%
Foreign Equity	11,195	21,736	8,595	41,526	9%
JV Operating Cash Flow	-	22,648	28,216	50,864	11%
Total Sources of Funds	74,632	220,404	151,351	446,387	100%
USES OF FUNDS					
Gubkinsky GPP Expansion	34,462	127,204	74,450	236,116	
Tarasovsky Gas Processing Plant	-	-	-	-	
Gas Gathering Systems Cost	14,115	43,323	33,211	90,649	
Metering Facilities Costs	347	1,041	801	2,189	
Infrastructure Costs	7,339	25,735	16,269	49,343	
Contributed Assets	7,463	14,491	5,730	27,684	
Other Owners Costs	6,211	-	-	6,211	
Initial Working Capital	3,000	-	-	3,000	
Capital Costs	72,937	211,795	130,461	415,192	93%
Other Loan Interest	945	8,084	20,766	29,794	
Other Loan Commitment Fees	751	525	125	1,401	
Upfront Fees	-	-	-	-	
Financing Costs	1,696	8,609	20,891	31,195	7%
Total Uses of Funds	74,632	220,404	151,351	446,387	100%

	$	%
Total Debt	312,471	70%
Operating Cash	50,864	11%
Equity Requirement	83,052	19%
	446,387	100%

MEMORANDA	WB/Other Loan	
Loan Draws, Amount	312,471	
Standby Facility	-	
Constr Loan Draws + Standby, Commitment	312,471	312,472
Constr Loan Int Rate	8.15%	
Commitment Fee Rate	0.25%	
Upfront Fee Rate	-	
Other Financing Fees (%, Amt)	-	
Repayment Period	9.0	

** NOTE: ANNUAL SANDU STATEMENT IS FOR PRESENTATION ONLY. VALUES ARE FROM QUARTERLY CALCULATIONS.

VAT TAX FUNDING				
VAT Tax	11,253	39,461	24,946	75,659
VAT Recovery Expressed in $'s	326	6,709	23,019	30,054
Net VAT Payment	10,927	32,752	1,927	45,606
PNG Cash Equity for VAT	1,821	5,459	321	7,601
SNGP Cash Equity for VAT	1,821	5,459	321	7,601
Gasprom Cash Equity for VAT	1,821	5,459	321	7,601
Foreign Equity for VAT	5,463	16,376	964	22,803
Cash Equity for VAT	10,927	32,752	1,927	45,606

Equity Requirement	83,052
Equity for VAT	45,606
Total Equity	128,657

145

1754

REVISED CASE 1B.1: Wet Gas = $0; Expected Tax; Capital Cost @ -25%

SIBERIAN GAS PROCESSING PLANT
Equity Returns

(Thousands)

	1994	1995	1996	1997	1998	1999	2000	2001	2002	2003	2004	2005	2006
EQUITY INVESTMENT													
SNGP Equity	-	5,553	12,704	3,186	-	-	-	-	-	-	-	-	-
PNG Equity	-	5,553	12,704	3,186	-	-	-	-	-	-	-	-	-
Gasprom Equity	-	5,553	12,704	3,186	-	-	-	-	-	-	-	-	-
Foreign Equity	-	16,658	38,112	9,558	-	-	-	-	-	-	-	-	-
Additional Equity	-	-	-	-	-	-	-	-	-	-	-	-	-
Total Equity	-	33,316	76,225	19,116	-	-	-	-	-	-	-	-	-
CUMULATIVE EQUITY INVESTMENT													
SNGP Equity Holdings	-	5,553	18,257	21,443	21,443	21,443	21,443	21,443	21,443	21,443	21,443	21,443	21,443
PNG Equity Holdings	-	5,553	18,257	21,443	21,443	21,443	21,443	21,443	21,443	21,443	21,443	21,443	21,443
Gasprom Equity Holdings	-	5,553	18,257	21,443	21,443	21,443	21,443	21,443	21,443	21,443	21,443	21,443	21,443
Foreign Equity Holdings	-	16,658	54,770	64,329	64,329	64,329	64,329	64,329	64,329	64,329	64,329	64,329	64,329
CS Equity Position	-	33,316	109,541	128,657	128,657	128,657	128,657	128,657	128,657	128,657	128,657	128,657	128,657
PROJECT RETURN ON EQUITY													
CS Dividends	-	-	-	-	548	51,600	45,962	41,629	44,402	46,633	45,233	37,966	59,609
Less: Equity Investment	-	33,316	76,225	19,116	-	-	-	-	-	-	-	-	-
Net Cash Flow	-	(33,316)	(76,225)	(19,116)	548	51,600	45,962	41,629	44,402	46,633	45,233	37,966	59,609
Cumulative	-	(33,316)	(109,541)	(128,657)	(128,109)	(76,508)	(30,546)	11,083	55,485	102,118	147,351	185,317	244,926
Real Net Cash Flow	-	(31,744)	(70,650)	(17,236)	481	44,024	38,146	33,221	34,071	34,407	32,090	25,899	39,098
Real Return on Equity	20.9%												

SIBERIAN GAS PROCESSING PLANT
Equity Returns
(Thousands)

	1994	1995	1996	1997	1998	1999	2000	2001	2002	2003	2004	2005	2006
SNGP RETURNS													
SNGP Share of Common Stock		17%	17%	17%	17%	17%	17%	17%	17%	17%	17%	17%	17%
CS Dividends	-	-	-	-	548	51,600	45,962	41,629	44,402	46,633	45,233	37,966	59,609
SNGP CS Dividends		-	-	-	91	8,600	7,660	6,938	7,400	7,772	7,539	6,328	9,935
SNGP CS Dividends		-	-	-	91	8,600	7,660	6,938	7,400	7,772	7,539	6,328	9,935
Plus: SNGP NGL Pipeline Marginal Profit	-	-	-	-	-	-	-	-	-	-	-	-	-
Less: SNGP Equity	-	5,553	12,704	3,186	-	-	-	-	-	-	-	-	-
SNGP Net Cash Flow	-	(5,553)	(12,704)	(3,186)	91	8,600	7,660	6,938	7,400	7,772	7,539	6,328	9,935
Real SNGP Net Cash Flow	-	(5,291)	(11,775)	(2,873)	80	7,337	6,358	5,537	5,678	5,734	5,348	4,316	6,516
SNGP Real Return on Equity	20.9%												
PNG RETURNS													
PNG Share of Common Stock		17%	17%	17%	17%	17%	17%	17%	17%	17%	17%	17%	17%
CS Dividends	-	-	-	-	548	51,600	45,962	41,629	44,402	46,633	45,233	37,966	59,609
PNG CS Dividends		-	-	-	91	8,600	7,660	6,938	7,400	7,772	7,539	6,328	9,935
PNG CS Dividends		-	-	-	91	8,600	7,660	6,938	7,400	7,772	7,539	6,328	9,935
Plus: PNG Wet Gas Marginal Profit	-	-	-	-	-	-	-	-	-	-	-	-	-
Less: PNG Equity	-	5,553	12,704	3,186	-	-	-	-	-	-	-	-	-
PNG Net Cash Flow	-	(5,553)	(12,704)	(3,186)	91	8,600	7,660	6,938	7,400	7,772	7,539	6,328	9,935
Real PNG Net Cash Flow	-	(5,291)	(11,775)	(2,873)	80	7,337	6,358	5,537	5,678	5,734	5,348	4,316	6,516
PNG Real Return on Equity	20.9%												
GASPROM RETURNS													
Gasprom Share of Common Stock		17%	17%	17%	17%	17%	17%	17%	17%	17%	17%	17%	17%
CS Dividends	-	-	-	-	548	51,600	45,962	41,629	44,402	46,633	45,233	37,966	59,609
Gasprom CS Dividends		-	-	-	91	8,600	7,660	6,938	7,400	7,772	7,539	6,328	9,935
Gasprom CS Dividends		-	-	-	91	8,600	7,660	6,938	7,400	7,772	7,539	6,328	9,935
Plus: Gasprom Transport Marginal Profit	-	-	-	-	-	-	-	-	-	-	-	-	-
Less: Gasprom Equity	-	5,553	12,704	3,186	-	-	-	-	-	-	-	-	-
Gasprom Net Cash Flow	-	(5,553)	(12,704)	(3,186)	91	8,600	7,660	6,938	7,400	7,772	7,539	6,328	9,935
Real Gasprom Net Cash Flow	-	(5,291)	(11,775)	(2,873)	80	7,337	6,358	5,537	5,678	5,734	5,348	4,316	6,516
Gasprom Real Return on Equity	20.9%												
FOREIGN INVESTOR RETURNS													
Foreign Share of Common Stock		50%	50%	50%	50%	50%	50%	50%	50%	50%	50%	50%	50%
CS Dividends	-	-	-	-	548	51,600	45,962	41,629	44,402	46,633	45,233	37,966	59,609
Foreign CS Dividends		-	-	-	274	25,800	22,981	20,815	22,201	23,317	22,616	18,983	29,804
Foreign CS Dividends		-	-	-	274	25,800	22,981	20,815	22,201	23,317	22,616	18,983	29,804
Less: Foreign Equity	-	16,658	38,112	9,558	-	-	-	-	-	-	-	-	-
Less: Additional Equity Investment	-	-	-	-	-	-	-	-	-	-	-	-	-
Foreign Net Cash Flow	-	(16,658)	(38,112)	(9,558)	274	25,800	22,981	20,815	22,201	23,317	22,616	18,983	29,804
Real Foreign Cash Flow	-	(15,872)	(35,325)	(8,618)	240	22,012	19,073	16,610	17,035	17,203	16,045	12,949	19,549
Foreign Real Return on Equity	20.9%												

147

REVISED CASE 1B.1: Wet Gas = $0; Expected Tax; Capital Cost @ -25%

SIBERIAN GAS PROCESSING PLANT
Equity Returns

(Thousands)

	2007	2008	2009	2010	2011	2012	2013	2014	2015	Total
EQUITY INVESTMENT										
SNGP Equity	-	-	-	-	-	-	-	-	-	21,443
PNG Equity	-	-	-	-	-	-	-	-	-	21,443
Gasprom Equity	-	-	-	-	-	-	-	-	-	21,443
Foreign Equity	-	-	-	-	-	-	-	-	-	64,329
Additional Equity	-	-	-	-	-	-	-	-	-	-
Total Equity	-	-	-	-	-	-	-	-	-	128,657
CUMULATIVE EQUITY INVESTMENT										
SNGP Equity Holdings	21,443	21,443	21,443	21,443	21,443	21,443	21,443	21,443	21,443	
PNG Equity Holdings	21,443	21,443	21,443	21,443	21,443	21,443	21,443	21,443	21,443	
Gasprom Equity Holdings	21,443	21,443	21,443	21,443	21,443	21,443	21,443	21,443	21,443	
Foreign Equity Holdings	64,329	64,329	64,329	64,329	64,329	64,329	64,329	64,329	64,329	
CS Equity Position	128,657	128,657	128,657	128,657	128,657	128,657	128,657	128,657	128,657	
PROJECT RETURN ON EQUITY										
CS Dividends	79,982	83,181	86,508	89,969	93,567	97,310	101,203	105,251	129,446	1,240,000
Less: Equity Investment	-	-	-	-	-	-	-	-	-	128,657
Net Cash Flow	79,982	83,181	86,508	89,969	93,567	97,310	101,203	105,251	129,446	1,111,342
Cumulative	324,908	408,089	494,597	584,566	678,133	775,443	876,646	981,896	1,111,342	
Real Net Cash Flow	50,443	50,443	50,443	50,443	50,443	50,443	50,443	50,443	59,653	625,006
Real Return on Equity										

SIBERIAN GAS PROCESSING PLANT
Equity Returns

(Thousands)

	2007	2008	2009	2010	2011	2012	2013	2014	2015	Total
SNGP RETURNS										
SNGP Share of Common Stock	17%	17%	17%	17%	17%	17%	17%	17%	17%	
CS Dividends	79,982	83,181	86,508	89,969	93,567	97,310	101,203	105,251	129,446	1,240,000
SNGP CS Dividends	13,330	13,864	14,418	14,995	15,595	16,218	16,867	17,542	21,574	206,667
SNGP CS Dividends	13,330	13,864	14,418	14,995	15,595	16,218	16,867	17,542	21,574	206,667
Plus: SNGP NGL Pipeline Marginal Profit	-	-	-	-	-	-	-	-	-	-
Less: SNGP Equity	-	-	-	-	-	-	-	-	-	21,443
SNGP Net Cash Flow	13,330	13,864	14,418	14,995	15,595	16,218	16,867	17,542	21,574	185,224
Real SNGP Net Cash Flow	8,407	8,407	8,407	8,407	8,407	8,407	8,407	8,407	9,942	104,168
SNGP Real Return on Equity										
PNG RETURNS										
PNG Share of Common Stock	17%	17%	17%	17%	17%	17%	17%	17%	17%	
CS Dividends	79,982	83,181	86,508	89,969	93,567	97,310	101,203	105,251	129,446	1,240,000
PNG CS Dividends	13,330	13,864	14,418	14,995	15,595	16,218	16,867	17,542	21,574	206,667
PNG CS Dividends	13,330	13,864	14,418	14,995	15,595	16,218	16,867	17,542	21,574	206,667
Plus: PNG Wet Gas Marginal Profit	-	-	-	-	-	-	-	-	-	-
Less: PNG Equity	-	-	-	-	-	-	-	-	-	21,443
PNG Net Cash Flow	13,330	13,864	14,418	14,995	15,595	16,218	16,867	17,542	21,574	185,224
Real PNG Net Cash Flow	8,407	8,407	8,407	8,407	8,407	8,407	8,407	8,407	9,942	104,168
PNG Real Return on Equity										
GASPROM RETURNS										
Gasprom Share of Common Stock	17%	17%	17%	17%	17%	17%	17%	17%	17%	
CS Dividends	79,982	83,181	86,508	89,969	93,567	97,310	101,203	105,251	129,446	1,240,000
Gasprom CS Dividends	13,330	13,864	14,418	14,995	15,595	16,218	16,867	17,542	21,574	206,667
Gasprom CS Dividends	13,330	13,864	14,418	14,995	15,595	16,218	16,867	17,542	21,574	206,667
Plus: Gasprom Transport Marginal Profit	-	-	-	-	-	-	-	-	-	-
Less: Gasprom Equity	-	-	-	-	-	-	-	-	-	21,443
Gasprom Net Cash Flow	13,330	13,864	14,418	14,995	15,595	16,218	16,867	17,542	21,574	185,224
Real Gasprom Net Cash Flow	8,407	8,407	8,407	8,407	8,407	8,407	8,407	8,407	9,942	104,168
Gasprom Real Return on Equity										
FOREIGN INVESTOR RETURNS										
Foreign Share of Common Stock	50%	50%	50%	50%	50%	50%	50%	50%	50%	
CS Dividends	79,982	83,181	86,508	89,969	93,567	97,310	101,203	105,251	129,446	1,240,000
Foreign CS Dividends	39,991	41,591	43,254	44,984	46,784	48,655	50,601	52,625	64,723	620,000
Foreign CS Dividends	39,991	41,591	43,254	44,984	46,784	48,655	50,601	52,625	64,723	620,000
Less: Foreign Equity	-	-	-	-	-	-	-	-	-	64,329
Less: Additional Equity Investment	-	-	-	-	-	-	-	-	-	-
Foreign Net Cash Flow	39,991	41,591	43,254	44,984	46,784	48,655	50,601	52,625	64,723	555,671
Real Foreign Cash Flow	25,222	25,222	25,222	25,222	25,222	25,222	25,222	25,222	29,827	312,503
Foreign Real Return on Equity										

149

SIBERIAN GAS PROCESSING PLANT
Data and Key Results

TIMING DATA

Cost Estimate Month	Oct 93	First, Last Operation Month	Jan 96 Dec 15
Financial Closing Month	Jan 95	Economic Life	20.00

ENGINEERING DATA

	1994	1995	1996	1997	1998	1999	2000	2001
Rated Capacity (BCM/yr) in 1996, 1998	2.14	4.28						
Stream Factor		-	100%	100%	100%	100%	100%	100%
Operations Partial Year Factor	-	-	1.000	1.000	1.000	100%	100%	100%
Wet Gas Processed (MCM)	-	-	2.14	2.14	4.28	4.28	4.28	4.28
Dry Gas Production (BCM)	-	-	1.80	1.91	3.76	3.76	3.76	3.76
NGL Production (MMTons)	-	-	0.36	0.49	1.07	1.07	1.07	1.07

REVENUE DATA (1996 $'s)

NGL Domestic Price ($/Ton)	67.86	Domestic Gas Price ($/MCM)	17.09
NGL Export Price ($/Ton)	144.00	Export Gas Price ($/MCM)	90.00
% NGL for Export	100%	% Dry Gas for Export	100%

OPERATING COST DATA (1993 $000's)

Wet Gas Feedstock Cost ($/MCM)	-	
Chemicals Cost	478	
Utility Cost	24,290	
Maintenance Cost	1,231	
Labor Cost, Benefits	1,705	648
Other Expenses	12,668	

TRANSPORT COSTS (1996 $'s)

	DOM	EXP
Dry Gas In-Russia Costs ($/MCM)	-	40.00
Dry Gas Export Costs		32.00
NGL In-Russia Costs ($/Ton)	1.94	36.55
NGL Pipeline Costs	43.52	43.52
NGL Port Loading Charge		1.62
NGL Shipping Cost		15.10

CAPITAL COST DATA (1993 $000's)

	1995	1996	1997	Total
Gubkinsky GPP Expansion	43,700	157,500	90,300	291,500
Tarasovsky Gas Processing Plant	-	-	-	-
Gas Gathering Systems Cost	17,900	53,700	40,200	111,800
Metering Facilities Cost	440	1,290	970	2,700
Contributed Assets	9,841	22,691	11,965	44,498
Other Owners Costs	8,000	-	-	8,000
Infrastructure Costs	9,306	31,874	19,721	60,900
Initial Working Capital	2,839	-	-	2,839
Capital Costs	92,026	267,055	163,156	522,237

WORKING CAPITAL DATA

Days Receivables	45
Days Payables	45

FINANCING DATA

	WB/Other Loan	
% of Permanent Financing	70%	
Loan Amount, Commitment	421,419	421,420
Loan Interest Rate	8.15%	
Start of Repayment, Repayment Period	Jan 98	9.0
Commitment Fees %	0.25%	
Upfront Fee %	-	
Other Fin Fees & Close Costs (%, Amt)	-	

KEY RESULTS SUMMARY

Real Return on Investment (no taxes)	12.6%
Unleveraged Payback (Yrs)	5.5
Nominal NPV (Oct '93) @ 15.0%	30,310
Real Return on Equity	9.6%
Leveraged Payback (Yrs)	8.8
Nominal NPV (Oct '93) @ 15.0%	(17,194)
Min Debt Service Coverage	104%
Average Debt Service Coverage	138%

FINANCING DATA (cont'd)

	Actual
Required Reserves (1st Operating Yr)	39,389
Cash Flow Dedicated to Reserves	100%
Reinvestment Rate	3.0%

TAX DATA

Tax & Book In Service Month	Jan 96
Profits Tax	32.00%
15% Yr SL Property %	100.0%
Carryforward Years	5
VAT Tax (% of CapEx)	20.0%
Property Tax (% of Fixed Assets)	-
Road Tax (% of Revenues)	0.4%
Dry Gas Export Tariff ('93 $/MCM)	-
NGL Export Tariff ('93 $/Ton)	-

ECONOMIC DATA

Global Inflation Rate	2.8% **
Capital Cost Esc Rate	2.8%
O&M Esc Rate	2.8%
Export Gas Price Esc Rate	2.8%
Domestic Gas Price Esc Rate	2.8%
Export NGL Price Esc Rate	2.8%
Domestic NGL Price Esc Rate	2.8%

** Until 2000, 4% thereafter
(all escalation equivalent to inflation)

SENSITIVITY ANALYSIS FACTORS

O&M Cost	1.25
Gas Price	1.00
NGL Price	1.00
Capital Cost	1.00
Transport Cost	1.00
Wet Gas Price	1.00

SIBERIAN GAS PROCESSING PLANT
Annual Sources and Uses of Funds During Construction

($US Thousands)

	1995	1996	1997	Total	%
SOURCES OF FUNDS					
World Bank/Other Loan	68,888	208,084	144,447	421,419	70%
SIBNG Cash Equity	-	-	-	-	-
PNG Cash Equity	-	-	-	-	-
Gasprom Cash Equity	4,921	11,346	5,983	22,249	4%
SIBNG Equity	4,921	11,346	5,983	22,249	4%
PNG Equity	4,921	11,346	5,983	22,249	4%
Foreign Equity	14,762	34,037	17,948	66,747	11%
JV Operating Cash Flow	-	21,105	26,010	47,114	8%
Total Sources of Funds	98,412	297,262	206,353	602,027	100%
USES OF FUNDS					
Gubkinsky GPP Expansion	45,950	169,606	99,266	314,821	
Tarasovsky Gas Processing Plant	-	-	-	-	
Gas Gathering Systems Cost	18,820	57,765	44,281	120,866	
Metering Facilities Costs	463	1,388	1,068	2,919	
Infrastructure Costs	9,785	34,314	21,692	65,791	
Contributed Assets	9,841	22,691	11,965	44,498	
Other Owners Costs	8,281	-	-	8,281	
Initial Working Capital	3,000	-	-	3,000	
Capital Costs	96,139	285,763	178,273	560,175	93%
Other Loan Interest	1,260	10,787	27,908	39,955	
Other Loan Commitment Fees	1,013	712	172	1,896	
Upfront Fees	-	-	-	-	
Financing Costs	2,273	11,499	28,079	41,852	7%
Total Uses of Funds	98,412	297,262	206,353	602,027	100%

	$	%
Total Debt	421,419	70%
Operating Cash	47,114	8%
Equity Requirement	133,494	22%
	602,027	100%

MEMORANDA	WB/Other Loan	
Loan Draws, Amount	421,419	
Standby Facility	-	
Constr Loan Draws + Standby, Commitment	421,419	421,420
Constr Loan Int Rate	8.15%	
Commitment Fee Rate	0.25%	
Upfront Fee Rate	-	
Other Financing Fees (%, Amt)	-	
Repayment Period	9.0	

** NOTE: ANNUAL SANDU STATEMENT IS FOR PRESENTATION ONLY. VALUES ARE FROM QUARTERLY CALCULATIONS.

VAT TAX FUNDING				
VAT Tax	15,003	52,614	33,262	100,879
VAT Recovery Expressed in $'s	435	8,945	30,692	40,072
Net VAT Payment	14,569	43,669	2,570	60,807
PNG Cash Equity for VAT	2,428	7,278	428	10,135
SNGP Cash Equity for VAT	2,428	7,278	428	10,135
Gasprom Cash Equity for VAT	2,428	7,278	428	10,135
Foreign Equity for VAT	7,284	21,834	1,285	30,404
Cash Equity for VAT	14,569	43,669	2,570	60,807

Equity Requirement	133,494
Equity for VAT	60,807
Total Equity	194,301

SIBERIAN GASS PROCESSING PLANT
Equity Returns

(Thousands)

	1994	1995	1996	1997	1998	1999	2000	2001	2002	2003	2004	2005	2006
EQUITY INVESTMENT													
SNGP Equity	-	7,349	18,624	6,411	-	-	-	-	-	-	-	-	-
PNG Equity	-	7,349	18,624	6,411	-	-	-	-	-	-	-	-	-
Gasprom Equity	-	7,349	18,624	6,411	-	-	-	-	-	-	-	-	-
Foreign Equity	-	22,046	55,871	19,233	-	-	-	-	-	-	-	-	-
Additional Equity	-	-	-	-	-	-	-	-	-	-	-	-	-
Total Equity	-	44,092	111,743	38,466	-	-	-	-	-	-	-	-	-
CUMULATIVE EQUITY INVESTMENT													
SNGP Equity Holdings	-	7,349	25,973	32,384	32,384	32,384	32,384	32,384	32,384	32,384	32,384	32,384	32,384
PNG Equity Holdings	-	7,349	25,973	32,384	32,384	32,384	32,384	32,384	32,384	32,384	32,384	32,384	32,384
Gasprom Equity Holdings	-	7,349	25,973	32,384	32,384	32,384	32,384	32,384	32,384	32,384	32,384	32,384	32,384
Foreign Equity Holdings	-	22,046	77,918	97,151	97,151	97,151	97,151	97,151	97,151	97,151	97,151	97,151	97,151
CS Equity Position	-	44,092	155,835	194,301	194,301	194,301	194,301	194,301	194,301	194,301	194,301	194,301	194,301
PROJECT RETURN ON EQUITY													
CS Dividends	-	-	-	-	-	-	14,416	18,138	25,105	31,929	33,958	32,061	48,448
Less: Equity Investment	-	44,092	111,743	38,466	-	-	-	-	-	-	-	-	-
Net Cash Flow	-	(44,092)	(111,743)	(38,466)	-	-	14,416	18,138	25,105	31,929	33,958	32,061	48,448
Cumulative	-	(44,092)	(155,835)	(194,301)	(194,301)	(194,301)	(179,885)	(161,747)	(136,642)	(104,713)	(70,755)	(38,694)	9,754
Real Net Cash Flow	-	(42,012)	(103,571)	(34,682)	-	-	11,965	14,475	19,263	23,557	24,091	21,871	31,778
Real Return on Equity	9.6%												

SIBERIAN GASS PROCESSING PLANT
Equity Returns

(Thousands)

	1994	1995	1996	1997	1998	1999	2000	2001	2002	2003	2004	2005	2006
SNGP RETURNS													
SNGP Share of Common Stock		17%	17%	17%	17%	17%	17%	17%	17%	17%	17%	17%	17%
CS Dividends	-	-	-	-	-	-	14,416	18,138	25,105	31,929	33,958	32,061	48,448
SNGP CS Dividends		-	-	-	-	-	2,403	3,023	4,184	5,321	5,660	5,344	8,075
SNGP CS Dividends		-	-	-	-	-	2,403	3,023	4,184	5,321	5,660	5,344	8,075
Plus: SNGP NGL Pipeline Marginal Profit	-	-	-	-	-	-	-	-	-	-	-	-	-
Less: SNGP Equity	-	7,349	18,624	6,411	-	-	-	-	-	-	-	-	-
SNGP Net Cash Flow	-	(7,349)	(18,624)	(6,411)	-	-	2,403	3,023	4,184	5,321	5,660	5,344	8,075
Real SNGP Net Cash Flow	-	(7,002)	(17,262)	(5,780)	-	-	1,994	2,412	3,211	3,926	4,015	3,645	5,296
SNGP Real Return on Equity	9.6%												
PNG RETURNS													
PNG Share of Common Stock		17%	17%	17%	17%	17%	17%	17%	17%	17%	17%	17%	17%
CS Dividends	-	-	-	-	-	-	14,416	18,138	25,105	31,929	33,958	32,061	48,448
PNG CS Dividends		-	-	-	-	-	2,403	3,023	4,184	5,321	5,660	5,344	8,075
PNG CS Dividends		-	-	-	-	-	2,403	3,023	4,184	5,321	5,660	5,344	8,075
Plus: PNG Wet Gas Marginal Profit	-	-	-	-	-	-	-	-	-	-	-	-	-
Less: PNG Equity	-	7,349	18,624	6,411	-	-	-	-	-	-	-	-	-
PNG Net Cash Flow	-	(7,349)	(18,624)	(6,411)	-	-	2,403	3,023	4,184	5,321	5,660	5,344	8,075
Real PNG Net Cash Flow	-	(7,002)	(17,262)	(5,780)	-	-	1,994	2,412	3,211	3,926	4,015	3,645	5,296
PNG Real Return on Equity	9.6%												
GASPROM RETURNS													
Gasprom Share of Common Stock		17%	17%	17%	17%	17%	17%	17%	17%	17%	17%	17%	17%
CS Dividends	-	-	-	-	-	-	14,416	18,138	25,105	31,929	33,958	32,061	48,448
Gasprom CS Dividends		-	-	-	-	-	2,403	3,023	4,184	5,321	5,660	5,344	8,075
Gasprom CS Dividends		-	-	-	-	-	2,403	3,023	4,184	5,321	5,660	5,344	8,075
Plus: Gasprom Transport Marginal Profit	-	-	-	-	-	-	-	-	-	-	-	-	-
Less: Gasprom Equity	-	7,349	18,624	6,411	-	-	-	-	-	-	-	-	-
Gasprom Net Cash Flow	-	(7,349)	(18,624)	(6,411)	-	-	2,403	3,023	4,184	5,321	5,660	5,344	8,075
Real Gasprom Net Cash Flow	-	(7,002)	(17,262)	(5,780)	-	-	1,994	2,412	3,211	3,926	4,015	3,645	5,296
Gasprom Real Return on Equity	9.6%												
FOREIGN INVESTOR RETURNS													
Foreign Share of Common Stock		50%	50%	50%	50%	50%	50%	50%	50%	50%	50%	50%	50%
CS Dividends	-	-	-	-	-	-	14,416	18,138	25,105	31,929	33,958	32,061	48,448
Foreign CS Dividends		-	-	-	-	-	7,208	9,069	12,552	15,964	16,979	16,031	24,224
Foreign CS Dividends		-	-	-	-	-	7,208	9,069	12,552	15,964	16,979	16,031	24,224
Less: Foreign Equity	-	22,046	55,871	19,233	-	-	-	-	-	-	-	-	-
Less: Additional Equity Investment	-	-	-	-	-	-	-	-	-	-	-	-	-
Foreign Net Cash Flow	-	(22,046)	(55,871)	(19,233)	-	-	7,208	9,069	12,552	15,964	16,979	16,031	24,224
Real Foreign Cash Flow	-	(21,006)	(51,786)	(17,341)	-	-	5,982	7,237	9,632	11,779	12,046	10,935	15,889
Foreign Real Return on Equity	9.6%												

153

1142

REVISED CASE 1B.1: Wet Gas = Expected Tax; O&M @ +25%

SIBERIAN GASS PROCESSING PLANT
Equity Returns

(Thousands)

	2007	2008	2009	2010	2011	2012	2013	2014	2015	Total
EQUITY INVESTMENT										
SNGP Equity	-	-	-	-	-	-	-	-	-	32,384
PNG Equity	-	-	-	-	-	-	-	-	-	32,384
Gasprom Equity	-	-	-	-	-	-	-	-	-	32,384
Foreign Equity	-	-	-	-	-	-	-	-	-	97,151
Additional Equity	-	-	-	-	-	-	-	-	-	-
Total Equity	-	-	-	-	-	-	-	-	-	194,301
CUMULATIVE EQUITY INVESTMENT										
SNGP Equity Holdings	32,384	32,384	32,384	32,384	32,384	32,384	32,384	32,384	32,384	
PNG Equity Holdings	32,384	32,384	32,384	32,384	32,384	32,384	32,384	32,384	32,384	
Gasprom Equity Holdings	32,384	32,384	32,384	32,384	32,384	32,384	32,384	32,384	32,384	
Foreign Equity Holdings	97,151	97,151	97,151	97,151	97,151	97,151	97,151	97,151	97,151	
CS Equity Position	194,301	194,301	194,301	194,301	194,301	194,301	194,301	194,301	194,301	
PROJECT RETURN ON EQUITY										
CS Dividends	71,198	74,046	77,008	80,088	83,292	86,624	90,089	93,692	115,230	975,322
Less: Equity Investment	-	-	-	-	-	-	-	-	-	194,301
Net Cash Flow	71,198	74,046	77,008	80,088	83,292	86,624	90,089	93,692	115,230	781,021
Cumulative	80,952	154,998	232,006	312,095	395,387	482,010	572,099	665,791	781,021	
Real Net Cash Flow	44,904	44,904	44,904	44,904	44,904	44,904	44,904	44,904	53,102	379,066
Real Return on Equity										

SIBERIAN GASS PROCESSING PLANT
Equity Returns

(Thousands)

	2007	2008	2009	2010	2011	2012	2013	2014	2015	Total
SNGP RETURNS										
SNGP Share of Common Stock	17%	17%	17%	17%	17%	17%	17%	17%	17%	
CS Dividends	71,198	74,046	77,008	80,088	83,292	86,624	90,089	93,692	115,230	975,322
SNGP CS Dividends	11,866	12,341	12,835	13,348	13,882	14,437	15,015	15,615	19,205	162,554
SNGP CS Dividends	11,866	12,341	12,835	13,348	13,882	14,437	15,015	15,615	19,205	162,554
Plus: SNGP NGL Pipeline Marginal Profit	-	-	-	-	-	-	-	-	-	-
Less: SNGP Equity	-	-	-	-	-	-	-	-	-	32,384
SNGP Net Cash Flow	11,866	12,341	12,835	13,348	13,882	14,437	15,015	15,615	19,205	130,170
Real SNGP Net Cash Flow	7,484	7,484	7,484	7,484	7,484	7,484	7,484	7,484	8,850	63,178
SNGP Real Return on Equity										
PNG RETURNS										
PNG Share of Common Stock	17%	17%	17%	17%	17%	17%	17%	17%	17%	
CS Dividends	71,198	74,046	77,008	80,088	83,292	86,624	90,089	93,692	115,230	975,322
PNG CS Dividends	11,866	12,341	12,835	13,348	13,882	14,437	15,015	15,615	19,205	162,554
PNG CS Dividends	11,866	12,341	12,835	13,348	13,882	14,437	15,015	15,615	19,205	162,554
Plus: PNG Wet Gas Marginal Profit	-	-	-	-	-	-	-	-	-	-
Less: PNG Equity	-	-	-	-	-	-	-	-	-	32,384
PNG Net Cash Flow	11,866	12,341	12,835	13,348	13,882	14,437	15,015	15,615	19,205	130,170
Real PNG Net Cash Flow	7,484	7,484	7,484	7,484	7,484	7,484	7,484	7,484	8,850	63,178
PNG Real Return on Equity										
GASPROM RETURNS										
Gasprom Share of Common Stock	17%	17%	17%	17%	17%	17%	17%	17%	17%	
CS Dividends	71,198	74,046	77,008	80,088	83,292	86,624	90,089	93,692	115,230	975,322
Gasprom CS Dividends	11,866	12,341	12,835	13,348	13,882	14,437	15,015	15,615	19,205	162,554
Gasprom CS Dividends	11,866	12,341	12,835	13,348	13,882	14,437	15,015	15,615	19,205	162,554
Plus: Gasprom Transport Marginal Profit	-	-	-	-	-	-	-	-	-	-
Less: Gasprom Equity	-	-	-	-	-	-	-	-	-	32,384
Gasprom Net Cash Flow	11,866	12,341	12,835	13,348	13,882	14,437	15,015	15,615	19,205	130,170
Real Gasprom Net Cash Flow	7,484	7,484	7,484	7,484	7,484	7,484	7,484	7,484	8,850	63,178
Gasprom Real Return on Equity										
FOREIGN INVESTOR RETURNS										
Foreign Share of Common Stock	50%	50%	50%	50%	50%	50%	50%	50%	50%	
CS Dividends	71,198	74,046	77,008	80,088	83,292	86,624	90,089	93,692	115,230	975,322
Foreign CS Dividends	35,599	37,023	38,504	40,044	41,646	43,312	45,044	46,846	57,615	487,661
Foreign CS Dividends	35,599	37,023	38,504	40,044	41,646	43,312	45,044	46,846	57,615	487,661
Less: Foreign Equity	-	-	-	-	-	-	-	-	-	97,151
Less: Additional Equity Investment	-	-	-	-	-	-	-	-	-	-
Foreign Net Cash Flow	35,599	37,023	38,504	40,044	41,646	43,312	45,044	46,846	57,615	390,511
Real Foreign Cash Flow	22,452	22,452	22,452	22,452	22,452	22,452	22,452	22,452	26,551	189,533
Foreign Real Return on Equity										

SIBERIAN GAS PROCESSING PLANT
Data and Key Results

TIMING DATA

Cost Estimate Month	Oct 93	First, Last Operation Month	Jan 96	Dec 15
Financial Closing Month	Jan 95	Economic Life	20.00	

ENGINEERING DATA

	1994	1995	1996	1997	1998	1999	2000	2001
Rated Capacity (BCM/yr)in 1996, 1998	2.14	4.28						
Stream Factor		-	100%	100%	100%	100%	100%	100%
Operations Partial Year Factor	-	-	1.000	1.000	1.000	100%	100%	100%
Wet Gas Processed (MCM)	-	-	2.14	2.14	4.28	4.28	4.28	4.28
Dry Gas Production (BCM)	-	-	1.80	1.91	3.76	3.76	3.76	3.76
NGL Production (MMTons)	-	-	0.36	0.49	1.07	1.07	1.07	1.07

REVENUE DATA (1996 $'s)

NGL Domestic Price ($/Ton)	67.86	Domestic Gas Price ($/MCM)	17.09
NGL Export Price ($/Ton)	144.00	Export Gas Price ($/MCM)	90.00
% NGL for Export	100%	% Dry Gas for Export	100%

OPERATING COST DATA (1993 $000's)

Wet Gas Feedstock Cost ($/MCM)	-	
Chemicals Cost	287	
Utility Cost	14,574	
Maintenance Cost	739	
Labor Cost, Benefits	1,023	389
Other Expenses	7,601	

TRANSPORT COSTS (1996 $'s)

	DOM	EXP
Dry Gas In-Russia Costs ($/MCM)	-	40.00
Dry Gas Export Costs		32.00
NGL In-Russia Costs ($/Ton)	1.94	36.55
NGL Pipeline Costs	43.52	43.52
NGL Port Loading Charge		1.62
NGL Shipping Cost		15.10

CAPITAL COST DATA (1993 $000's)

	1995	1996	1997	Total
Gubkinsky GPP Expansion	43,700	157,500	90,300	291,500
Tarasovsky Gas Processing Plant	-	-	-	-
Gas Gathering Systems Cost	17,900	53,700	40,200	111,800
Metering Facilities Cost	440	1,290	970	2,700
Contributed Assets	9,840	20,718	9,487	40,045
Other Owners Costs	8,000	-	-	8,000
Infrastructure Costs	9,306	31,874	19,721	60,900
Initial Working Capital	2,839	-	-	2,839
Capital Costs	92,025	265,081	160,678	517,784

WORKING CAPITAL DATA

Days Receivables	45
Days Payables	45

FINANCING DATA

	WB/Other Loan	
% of Permanent Financing	70%	
Loan Amount, Commitment	418,143	418,145
Loan Interest Rate	8.15%	
Start of Repayment, Repayment Period	Jan 98	9.0
Commitment Fees %	0.25%	
Upfront Fee %	-	
Other Fin Fees & Close Costs (%, Amt)	-	

KEY RESULTS SUMMARY

Real Return on Investment (no taxes)	16.7%
Unleveraged Payback (Yrs)	4.4
Nominal NPV (Oct '93) @ 15.0%	117,416
Real Return on Equity	15.5%
Leveraged Payback (Yrs)	5.4
Nominal NPV (Oct '93) @ 15.0%	51,808
Min Debt Service Coverage	128%
Average Debt Service Coverage	164%

FINANCING DATA (cont'd)

	Actual
Required Reserves (1st Operating Yr)	39,083
Cash Flow Dedicated to Reserves	100%
Reinvestment Rate	3.0%

TAX DATA

Tax & Book In Service Month	Jan 96
Profits Tax	32.00%
15% Yr SL Property %	100.0%
Carryforward Years	5
VAT Tax (% of CapEx)	20.0%
Property Tax (% of Fixed Assets)	-
Road Tax (% of Revenues)	0.4%
Dry Gas Export Tariff ('93 $/MCM)	-
NGL Export Tariff ('93 $/Ton)	-

ECONOMIC DATA

Global Inflation Rate	2.8% **
Capital Cost Esc Rate	2.8%
O&M Esc Rate	2.8%
Export Gas Price Esc Rate	2.8%
Domestic Gas Price Esc Rate	2.8%
Export NGL Price Esc Rate	2.8%
Domestic NGL Price Esc Rate	2.8%

** Until 2000, 4% thereafter
(all escalation equivalent to inflation)

SENSITIVITY ANALYSIS FACTORS

O&M Cost	0.75
Gas Price	1.00
NGL Price	1.00
Capital Cost	1.00
Transport Cost	1.00
Wet Gas Price	1.00

SIBERIAN GAS PROCESSING PLANT
Annual Sources and Uses of Funds During Construction

($US Thousands)

	1995	1996	1997	Total	%
SOURCES OF FUNDS					
World Bank/Other Loan	68,882	206,668	142,593	418,143	70%
SIBNG Cash Equity	-	-	-	-	-
PNG Cash Equity	-	-	-	-	-
Gasprom Cash Equity	4,920	10,359	4,744	20,022	3%
SIBNG Equity	4,920	10,359	4,744	20,022	3%
PNG Equity	4,920	10,359	4,744	20,022	3%
Foreign Equity	14,760	31,076	14,231	60,067	10%
JV Operating Cash Flow	-	26,419	32,650	59,069	10%
Total Sources of Funds	98,403	295,239	203,705	597,347	100%
USES OF FUNDS					
Gubkinsky GPP Expansion	45,950	169,606	99,266	314,821	
Tarasovsky Gas Processing Plant	-	-	-	-	
Gas Gathering Systems Cost	18,820	57,765	44,281	120,866	
Metering Facilities Costs	463	1,388	1,068	2,919	
Infrastructure Costs	9,785	34,314	21,692	65,791	
Contributed Assets	9,840	20,718	9,487	40,045	
Other Owners Costs	8,281	-	-	8,281	
Initial Working Capital	3,000	-	-	3,000	
Capital Costs	96,138	283,789	175,795	555,722	93%
Other Loan Interest	1,260	10,745	27,741	39,746	
Other Loan Commitment Fees	1,005	705	169	1,878	
Upfront Fees	-	-	-	-	
Financing Costs	2,265	11,450	27,910	41,625	7%
Total Uses of Funds	98,403	295,239	203,705	597,347	100%

	$	%
Total Debt	418,143	70%
Operating Cash	59,069	10%
Equity Requirement	120,135	20%
	597,347	100%

MEMORANDA	WB/Other Loan	
Loan Draws, Amount	418,143	
Standby Facility	-	
Constr Loan Draws + Standby, Commitment	418,143	418,145
Constr Loan Int Rate	8.15%	
Commitment Fee Rate	0.25%	
Upfront Fee Rate	-	
Other Financing Fees (%, Amt)	-	
Repayment Period	9.0	

** NOTE: ANNUAL SANDU STATEMENT IS FOR PRESENTATION ONLY. VALUES ARE FROM QUARTERLY CALCULATIONS.

VAT TAX FUNDING				
VAT Tax	15,003	52,614	33,262	100,879
VAT Recovery Expressed in $'s	435	8,945	30,692	40,072
Net VAT Payment	14,569	43,669	2,570	60,807
PNG Cash Equity for VAT	2,428	7,278	428	10,135
SNGP Cash Equity for VAT	2,428	7,278	428	10,135
Gasprom Cash Equity for VAT	2,428	7,278	428	10,135
Foreign Equity for VAT	7,284	21,834	1,285	30,404
Cash Equity for VAT	14,569	43,669	2,570	60,807

Equity Requirement	120,135
Equity for VAT	60,807
Total Equity	180,942

1746

157

SIBERIAN GASS PROCESSING PLANT
Equity Returns

(Thousands)

	1994	1995	1996	1997	1998	1999	2000	2001	2002	2003	2004	2005	2006
EQUITY INVESTMENT													
SNGP Equity	-	7,348	17,637	5,172	-	-	-	-	-	-	-	-	-
PNG Equity	-	7,348	17,637	5,172	-	-	-	-	-	-	-	-	-
Gasprom Equity	-	7,348	17,637	5,172	-	-	-	-	-	-	-	-	-
Foreign Equity	-	22,045	52,911	15,515	-	-	-	-	-	-	-	-	-
Additional Equity	-	-	-	-	-	-	-	-	-	-	-	-	-
Total Equity	-	44,090	105,821	31,031	-	-	-	-	-	-	-	-	-
CUMULATIVE EQUITY INVESTMENT													
SNGP Equity Holdings	-	7,348	24,985	30,157	30,157	30,157	30,157	30,157	30,157	30,157	30,157	30,157	30,157
PNG Equity Holdings	-	7,348	24,985	30,157	30,157	30,157	30,157	30,157	30,157	30,157	30,157	30,157	30,157
Gasprom Equity Holdings	-	7,348	24,985	30,157	30,157	30,157	30,157	30,157	30,157	30,157	30,157	30,157	30,157
Foreign Equity Holdings	-	22,045	74,956	90,471	90,471	90,471	90,471	90,471	90,471	90,471	90,471	90,471	90,471
CS Equity Position	-	44,090	149,911	180,942	180,942	180,942	180,942	180,942	180,942	180,942	180,942	180,942	180,942
PROJECT RETURN ON EQUITY													
CS Dividends	-	-	-	-	-	31,385	42,287	39,105	45,661	50,822	50,966	33,919	62,205
Less: Equity Investment	-	44,090	105,821	31,031	-	-	-	-	-	-	-	-	-
Net Cash Flow	-	(44,090)	(105,821)	(31,031)	-	31,385	42,287	39,105	45,661	50,822	50,966	33,919	62,205
Cumulative	-	(44,090)	(149,911)	(180,942)	(180,942)	(149,557)	(107,271)	(68,166)	(22,505)	28,317	79,283	113,202	175,407
Real Net Cash Flow	-	(42,010)	(98,083)	(27,978)	-	26,777	35,095	31,206	35,037	37,497	36,157	23,138	40,801
Real Return on Equity	15.5%												

SIBERIAN GASS PROCESSING PLANT
Equity Returns

(Thousands)

	1994	1995	1996	1997	1998	1999	2000	2001	2002	2003	2004	2005	2006
SNGP RETURNS													
SNGP Share of Common Stock		17%	17%	17%	17%	17%	17%	17%	17%	17%	17%	17%	17%
CS Dividends	-	-	-	-	-	31,385	42,287	39,105	45,661	50,822	50,966	33,919	62,205
SNGP CS Dividends		-	-	-	-	5,231	7,048	6,517	7,610	8,470	8,494	5,653	10,367
SNGP CS Dividends		-	-	-	-	5,231	7,048	6,517	7,610	8,470	8,494	5,653	10,367
Plus: SNGP NGL Pipeline Marginal Profit	-	-	-	-	-	-	-	-	-	-	-	-	-
Less: SNGP Equity	-	7,348	17,637	5,172	-	-	-	-	-	-	-	-	-
SNGP Net Cash Flow	-	(7,348)	(17,637)	(5,172)	-	5,231	7,048	6,517	7,610	8,470	8,494	5,653	10,367
Real SNGP Net Cash Flow	-	(7,002)	(16,347)	(4,663)	-	4,463	5,849	5,201	5,840	6,250	6,026	3,856	6,800
SNGP Real Return on Equity	15.5%												
PNG RETURNS													
PNG Share of Common Stock		17%	17%	17%	17%	17%	17%	17%	17%	17%	17%	17%	17%
CS Dividends	-	-	-	-	-	31,385	42,287	39,105	45,661	50,822	50,966	33,919	62,205
PNG CS Dividends		-	-	-	-	5,231	7,048	6,517	7,610	8,470	8,494	5,653	10,367
PNG CS Dividends		-	-	-	-	5,231	7,048	6,517	7,610	8,470	8,494	5,653	10,367
Plus: PNG Wet Gas Marginal Profit	-	-	-	-	-	-	-	-	-	-	-	-	-
Less: PNG Equity	-	7,348	17,637	5,172	-	-	-	-	-	-	-	-	-
PNG Net Cash Flow	-	(7,348)	(17,637)	(5,172)	-	5,231	7,048	6,517	7,610	8,470	8,494	5,653	10,367
Real PNG Net Cash Flow	-	(7,002)	(16,347)	(4,663)	-	4,463	5,849	5,201	5,840	6,250	6,026	3,856	6,800
PNG Real Return on Equity	15.5%												
GASPROM RETURNS													
Gasprom Share of Common Stock		17%	17%	17%	17%	17%	17%	17%	17%	17%	17%	17%	17%
CS Dividends	-	-	-	-	-	31,385	42,287	39,105	45,661	50,822	50,966	33,919	62,205
Gasprom CS Dividends		-	-	-	-	5,231	7,048	6,517	7,610	8,470	8,494	5,653	10,367
Gasprom CS Dividends		-	-	-	-	5,231	7,048	6,517	7,610	8,470	8,494	5,653	10,367
Plus: Gasprom Transport Marginal Profit	-	-	-	-	-	-	-	-	-	-	-	-	-
Less: Gasprom Equity	-	7,348	17,637	5,172	-	-	-	-	-	-	-	-	-
Gasprom Net Cash Flow	-	(7,348)	(17,637)	(5,172)	-	5,231	7,048	6,517	7,610	8,470	8,494	5,653	10,367
Real Gasprom Net Cash Flow	-	(7,002)	(16,347)	(4,663)	-	4,463	5,849	5,201	5,840	6,250	6,026	3,856	6,800
Gasprom Real Return on Equity	15.5%												
FOREIGN INVESTOR RETURNS													
Foreign Share of Common Stock		50%	50%	50%	50%	50%	50%	50%	50%	50%	50%	50%	50%
CS Dividends	-	-	-	-	-	31,385	42,287	39,105	45,661	50,822	50,966	33,919	62,205
Foreign CS Dividends		-	-	-	-	15,692	21,143	19,552	22,831	25,411	25,483	16,960	31,102
Foreign CS Dividends		-	-	-	-	15,692	21,143	19,552	22,831	25,411	25,483	16,960	31,102
Less: Foreign Equity	-	22,045	52,911	15,515	-	-	-	-	-	-	-	-	-
Less: Additional Equity Investment	-	-	-	-	-	-	-	-	-	-	-	-	-
Foreign Net Cash Flow	-	(22,045)	(52,911)	(15,515)	-	15,692	21,143	19,552	22,831	25,411	25,483	16,960	31,102
Real Foreign Cash Flow	-	(21,005)	(49,041)	(13,989)	-	13,388	17,548	15,603	17,519	18,749	18,079	11,569	20,401
Foreign Real Return on Equity	15.5%												

159

SIBERIAN GASS PROCESSING PLANT
Equity Returns

(Thousands)

	2007	2008	2009	2010	2011	2012	2013	2014	2015	Total
EQUITY INVESTMENT										
SNGP Equity	-	-	-	-	-	-	-	-	-	30,157
PNG Equity	-	-	-	-	-	-	-	-	-	30,157
Gasprom Equity	-	-	-	-	-	-	-	-	-	30,157
Foreign Equity	-	-	-	-	-	-	-	-	-	90,471
Additional Equity	-	-	-	-	-	-	-	-	-	-
Total Equity	-	-	-	-	-	-	-	-	-	180,942
CUMULATIVE EQUITY INVESTMENT										
SNGP Equity Holdings	30,157	30,157	30,157	30,157	30,157	30,157	30,157	30,157	30,157	
PNG Equity Holdings	30,157	30,157	30,157	30,157	30,157	30,157	30,157	30,157	30,157	
Gasprom Equity Holdings	30,157	30,157	30,157	30,157	30,157	30,157	30,157	30,157	30,157	
Foreign Equity Holdings	90,471	90,471	90,471	90,471	90,471	90,471	90,471	90,471	90,471	
CS Equity Position	180,942	180,942	180,942	180,942	180,942	180,942	180,942	180,942	180,942	
PROJECT RETURN ON EQUITY										
CS Dividends	88,765	92,316	96,009	99,849	103,843	107,997	112,317	116,809	143,661	1,317,915
Less: Equity Investment	-	-	-	-	-	-	-	-	-	180,942
Net Cash Flow	88,765	92,316	96,009	99,849	103,843	107,997	112,317	116,809	143,661	1,136,973
Cumulative	264,173	356,489	452,497	552,346	656,189	764,186	876,502	993,311	1,136,973	
Real Net Cash Flow	55,983	55,983	55,983	55,983	55,983	55,983	55,983	55,983	66,204	611,707
Real Return on Equity										

160

SIBERIAN GASS PROCESSING PLANT
Equity Returns

(Thousands)

	2007	2008	2009	2010	2011	2012	2013	2014	2015	Total
SNGP RETURNS										
SNGP Share of Common Stock	17%	17%	17%	17%	17%	17%	17%	17%	17%	
CS Dividends	88,765	92,316	96,009	99,849	103,843	107,997	112,317	116,809	143,661	1,317,915
SNGP CS Dividends	14,794	15,386	16,001	16,641	17,307	17,999	18,719	19,468	23,944	219,652
SNGP CS Dividends	14,794	15,386	16,001	16,641	17,307	17,999	18,719	19,468	23,944	219,652
Plus: SNGP NGL Pipeline Marginal Profit	-	-	-	-	-	-	-	-	-	-
Less: SNGP Equity	-	-	-	-	-	-	-	-	-	30,157
SNGP Net Cash Flow	14,794	15,386	16,001	16,641	17,307	17,999	18,719	19,468	23,944	189,495
Real SNGP Net Cash Flow	9,331	9,331	9,331	9,331	9,331	9,331	9,331	9,331	11,034	101,951
SNGP Real Return on Equity										
PNG RETURNS										
PNG Share of Common Stock	17%	17%	17%	17%	17%	17%	17%	17%	17%	
CS Dividends	88,765	92,316	96,009	99,849	103,843	107,997	112,317	116,809	143,661	1,317,915
PNG CS Dividends	14,794	15,386	16,001	16,641	17,307	17,999	18,719	19,468	23,944	219,652
PNG CS Dividends	14,794	15,386	16,001	16,641	17,307	17,999	18,719	19,468	23,944	219,652
Plus: PNG Wet Gas Marginal Profit	-	-	-	-	-	-	-	-	-	-
Less: PNG Equity	-	-	-	-	-	-	-	-	-	30,157
PNG Net Cash Flow	14,794	15,386	16,001	16,641	17,307	17,999	18,719	19,468	23,944	189,495
Real PNG Net Cash Flow	9,331	9,331	9,331	9,331	9,331	9,331	9,331	9,331	11,034	101,951
PNG Real Return on Equity										
GASPROM RETURNS										
Gasprom Share of Common Stock	17%	17%	17%	17%	17%	17%	17%	17%	17%	
CS Dividends	88,765	92,316	96,009	99,849	103,843	107,997	112,317	116,809	143,661	1,317,915
Gasprom CS Dividends	14,794	15,386	16,001	16,641	17,307	17,999	18,719	19,468	23,944	219,652
Gasprom CS Dividends	14,794	15,386	16,001	16,641	17,307	17,999	18,719	19,468	23,944	219,652
Plus: Gasprom Transport Marginal Profit	-	-	-	-	-	-	-	-	-	-
Less: Gasprom Equity	-	-	-	-	-	-	-	-	-	30,157
Gasprom Net Cash Flow	14,794	15,386	16,001	16,641	17,307	17,999	18,719	19,468	23,944	189,495
Real Gasprom Net Cash Flow	9,331	9,331	9,331	9,331	9,331	9,331	9,331	9,331	11,034	101,951
Gasprom Real Return on Equity										
FOREIGN INVESTOR RETURNS										
Foreign Share of Common Stock	50%	50%	50%	50%	50%	50%	50%	50%	50%	
CS Dividends	88,765	92,316	96,009	99,849	103,843	107,997	112,317	116,809	143,661	1,317,915
Foreign CS Dividends	44,383	46,158	48,004	49,924	51,921	53,998	56,158	58,405	71,831	658,957
Foreign CS Dividends	44,383	46,158	48,004	49,924	51,921	53,998	56,158	58,405	71,831	658,957
Less: Foreign Equity	-	-	-	-	-	-	-	-	-	90,471
Less: Additional Equity Investment	-	-	-	-	-	-	-	-	-	-
Foreign Net Cash Flow	44,383	46,158	48,004	49,924	51,921	53,998	56,158	58,405	71,831	568,486
Real Foreign Cash Flow	27,992	27,992	27,992	27,992	27,992	27,992	27,992	27,992	33,102	305,853
Foreign Real Return on Equity										

1760
61

SIBERIAN GAS PROCESSING PLANT
Data and Key Results

TIMING DATA

Cost Estimate Month	Oct 93	First, Last Operation Month	Jan 96	Dec 15
Financial Closing Month	Jan 95	Economic Life	20.00	

ENGINEERING DATA

	1994	1995	1996	1997	1998	1999	2000	2001
Rated Capacity (BCM/yr) in 1996, 1998	2.14	4.28						
Stream Factor	-	-	100%	100%	100%	100%	100%	100%
Operations Partial Year Factor	-	-	1.000	1.000	1.000	100%	100%	100%
Wet Gas Processed (MCM)	-	-	2.14	2.14	4.28	4.28	4.28	4.28
Dry Gas Production (BCM)	-	-	1.80	1.91	3.76	3.76	3.76	3.76
NGL Production (MMTons)	-	-	0.36	0.49	1.07	1.07	1.07	1.07

REVENUE DATA (1996 $'s)

NGL Domestic Price ($/Ton)	67.86	Domestic Gas Price ($/MCM)	17.09
NGL Export Price ($/Ton)	144.00	Export Gas Price ($/MCM)	90.00
% NGL for Export	100%	% Dry Gas for Export	100%

OPERATING COST DATA (1993 $000's)

			TRANSPORT COSTS (1996 $'s)	DOM	EXP
Wet Gas Feedstock Cost ($/MCM)	-		Dry Gas In-Russia Costs ($/MCM)	-	40.00
Chemicals Cost	573		Dry Gas Export Costs		32.00
Utility Cost	29,148		NGL In-Russia Costs ($/Ton)	1.94	36.55
Maintenance Cost	1,478		NGL Pipeline Costs	43.52	43.52
Labor Cost, Benefits	2,046	777	NGL Port Loading Charge		1.62
Other Expenses	15,201		NGL Shipping Cost		15.10

CAPITAL COST DATA (1993 $000's)

	1995	1996	1997	Total
Gubkinsky GPP Expansion	43,700	157,500	90,300	291,500
Tarasovsky Gas Processing Plant	-	-	-	-
Gas Gathering Systems Cost	17,900	53,700	40,200	111,800
Metering Facilities Cost	440	1,290	970	2,700
Contributed Assets	9,842	23,678	13,204	46,724
Other Owners Costs	8,000	-	-	8,000
Infrastructure Costs	9,306	31,874	19,721	60,900
Initial Working Capital	2,839	-	-	2,839
Capital Costs	92,026	268,042	164,395	524,463

WORKING CAPITAL DATA

Days Receivables	45
Days Payables	45

FINANCING DATA

	WB/Other Loan	
% of Permanent Financing	70%	
Loan Amount, Commitment	423,057	423,060
Loan Interest Rate	8.15%	
Start of Repayment, Repayment Period	Jan 98	9.0
Commitment Fees %	0.25%	
Upfront Fee %	-	
Other Fin Fees & Close Costs (%, Amt)	-	

KEY RESULTS SUMMARY

Real Return on Investment (no taxes)	10.5%
Unleveraged Payback (Yrs)	6.3
Nominal NPV (Oct '93) @ 15.0%	(13,243)
Real Return on Equity	6.7%
Leveraged Payback (Yrs)	10.1
Nominal NPV (Oct '93) @ 15.0%	(51,207)
Min Debt Service Coverage	93%
Average Debt Service Coverage	124%

FINANCING DATA (cont'd)

	Actual
Required Reserves (1st Operating Yr)	39,542
Cash Flow Dedicated to Reserves	100%
Reinvestment Rate	3.0%

TAX DATA

Tax & Book In Service Month	Jan 96
Profits Tax	32.00%
15% Yr SL Property %	100.0%
Carryforward Years	5
VAT Tax (% of CapEx)	20.0%
Property Tax (% of Fixed Assets)	-
Road Tax (% of Revenues)	0.4%
Dry Gas Export Tariff ('93 $/MCM)	-
NGL Export Tariff ('93 $/Ton)	-

ECONOMIC DATA

Global Inflation Rate	2.8% **
Capital Cost Esc Rate	2.8%
O&M Esc Rate	2.8%
Export Gas Price Esc Rate	2.8%
Domestic Gas Price Esc Rate	2.8%
Export NGL Price Esc Rate	2.8%
Domestic NGL Price Esc Rate	2.8%

** Until 2000, 4% thereafter
(all escalation equivalent to inflation)

SENSITIVITY ANALYSIS FACTORS

O&M Cost	1.50
Gas Price	1.00
NGL Price	1.00
Capital Cost	1.00
Transport Cost	1.00
Wet Gas Price	1.00

SIBERIAN GAS PROCESSING PLANT
Annual Sources and Uses of Funds During Construction

($US Thousands)

	1995	1996	1997	Total	%
SOURCES OF FUNDS					
World Bank/Other Loan	68,892	208,791	145,374	423,057	70%
SIBNG Cash Equity	-	-	-	-	-
PNG Cash Equity	-	-	-	-	-
Gasprom Cash Equity	4,921	11,839	6,602	23,362	4%
SIBNG Equity	4,921	11,839	6,602	23,362	4%
PNG Equity	4,921	11,839	6,602	23,362	4%
Foreign Equity	14,763	35,517	19,807	70,087	12%
JV Operating Cash Flow	-	18,447	22,689	41,137	7%
Total Sources of Funds	98,417	298,273	207,677	604,367	100%
USES OF FUNDS					
Gubkinsky GPP Expansion	45,950	169,606	99,266	314,821	
Tarasovsky Gas Processing Plant	-	-	-	-	
Gas Gathering Systems Cost	18,820	57,765	44,281	120,866	
Metering Facilities Costs	463	1,388	1,068	2,919	
Infrastructure Costs	9,785	34,314	21,692	65,791	
Contributed Assets	9,842	23,678	13,204	46,724	
Other Owners Costs	8,281	-	-	8,281	
Initial Working Capital	3,000	-	-	3,000	
Capital Costs	96,140	286,750	179,512	562,402	93%
Other Loan Interest	1,260	10,808	27,991	40,060	
Other Loan Commitment Fees	1,017	715	173	1,905	
Upfront Fees	-	-	-	-	
Financing Costs	2,277	11,524	28,164	41,965	7%
Total Uses of Funds	98,417	298,273	207,677	604,367	100%

	$	%
Total Debt	423,057	70%
Operating Cash	41,137	7%
Equity Requirement	140,173	23%
	604,367	100%

MEMORANDA	WB/Other Loan	
Loan Draws, Amount	423,057	
Standby Facility	-	
Constr Loan Draws + Standby, Commitment	423,057	423,060
Constr Loan Int Rate	8.15%	
Commitment Fee Rate	0.25%	
Upfront Fee Rate	-	
Other Financing Fees (%, Amt)	-	
Repayment Period	9.0	

** NOTE: ANNUAL SANDU STATEMENT IS FOR PRESENTATION ONLY. VALUES ARE FROM QUARTERLY CALCULATIONS.

	1995	1996	1997	Total
VAT TAX FUNDING				
VAT Tax	15,003	52,614	33,262	100,879
VAT Recovery Expressed in $'s	435	8,945	30,692	40,072
Net VAT Payment	14,569	43,669	2,570	60,807
PNG Cash Equity for VAT	2,428	7,278	428	10,135
SNGP Cash Equity for VAT	2,428	7,278	428	10,135
Gasprom Cash Equity for VAT	2,428	7,278	428	10,135
Foreign Equity for VAT	7,284	21,834	1,285	30,404
Cash Equity for VAT	14,569	43,669	2,570	60,807

Equity Requirement	140,173
Equity for VAT	60,807
Total Equity	200,981

163

1762

REVISED CASE 1B.1: Wet Gas = Expected Tax; O&M @ +50%

SIBERIAN GASS PROCESSING PLANT
Equity Returns

(Thousands)

	1994	1995	1996	1997	1998	1999	2000	2001	2002	2003	2004	2005	2006
EQUITY INVESTMENT													
SNGP Equity	-	7,349	19,117	7,031	-	-	-	-	-	-	-	-	-
PNG Equity	-	7,349	19,117	7,031	-	-	-	-	-	-	-	-	-
Gasprom Equity	-	7,349	19,117	7,031	-	-	-	-	-	-	-	-	-
Foreign Equity	-	22,047	57,352	21,092	-	-	-	-	-	-	-	-	-
Additional Equity	-	-	-	-	5,599	-	-	-	-	-	-	-	-
Total Equity	-	44,094	114,704	42,183	5,599	-	-	-	-	-	-	-	-
CUMULATIVE EQUITY INVESTMENT													
SNGP Equity Holdings	-	7,349	26,466	33,497	33,497	33,497	33,497	33,497	33,497	33,497	33,497	33,497	33,497
PNG Equity Holdings	-	7,349	26,466	33,497	33,497	33,497	33,497	33,497	33,497	33,497	33,497	33,497	33,497
Gasprom Equity Holdings	-	7,349	26,466	33,497	33,497	33,497	33,497	33,497	33,497	33,497	33,497	33,497	33,497
Foreign Equity Holdings	-	22,047	79,399	100,490	106,090	106,090	106,090	106,090	106,090	106,090	106,090	106,090	106,090
CS Equity Position	-	44,094	158,797	200,981	206,580	206,580	206,580	206,580	206,580	206,580	206,580	206,580	206,580
PROJECT RETURN ON EQUITY													
CS Dividends	-	-	-	-	-	-	-	-	11,776	20,914	24,133	21,824	50,562
Less: Equity Investment	-	44,094	114,704	42,183	5,599	-	-	-	-	-	-	-	-
Net Cash Flow	-	(44,094)	(114,704)	(42,183)	(5,599)	-	-	-	11,776	20,914	24,133	21,824	50,562
Cumulative	-	(44,094)	(158,797)	(200,981)	(206,580)	(206,580)	(206,580)	(206,580)	(194,804)	(173,890)	(149,757)	(127,932)	(77,370)
Real Net Cash Flow	-	(42,014)	(106,315)	(38,033)	(4,911)	-	-	-	9,036	15,431	17,121	14,887	33,165
Real Return on Equity	6.7%												

SIBERIAN GASS PROCESSING PLANT
Equity Returns

(Thousands)

	1994	1995	1996	1997	1998	1999	2000	2001	2002	2003	2004	2005	2006
SNGP RETURNS													
SNGP Share of Common Stock		17%	17%	17%	16%	16%	16%	16%	16%	16%	16%	16%	16%
CS Dividends	-	-	-	-	-	-	-	-	11,776	20,914	24,133	21,824	50,562
SNGP CS Dividends		-	-	-	-	-	-	-	1,909	3,391	3,913	3,539	8,199
SNGP CS Dividends		-	-	-	-	-	-	-	1,909	3,391	3,913	3,539	8,199
Plus: SNGP NGL Pipeline Marginal Profit	-	-	-	-	-	-	-	-	-	-	-	-	-
Less: SNGP Equity	-	7,349	19,117	7,031	-	-	-	-	-	-	-	-	-
SNGP Net Cash Flow	-	(7,349)	(19,117)	(7,031)	-	-	-	-	1,909	3,391	3,913	3,539	8,199
Real SNGP Net Cash Flow	-	(7,002)	(17,719)	(6,339)	-	-	-	-	1,465	2,502	2,776	2,414	5,378
SNGP Real Return on Equity	6.7%												
PNG RETURNS													
PNG Share of Common Stock		17%	17%	17%	16%	16%	16%	16%	16%	16%	16%	16%	16%
CS Dividends	-	-	-	-	-	-	-	-	11,776	20,914	24,133	21,824	50,562
PNG CS Dividends		-	-	-	-	-	-	-	1,909	3,391	3,913	3,539	8,199
PNG CS Dividends		-	-	-	-	-	-	-	1,909	3,391	3,913	3,539	8,199
Plus: PNG Wet Gas Marginal Profit	-	-	-	-	-	-	-	-	-	-	-	-	-
Less: PNG Equity	-	7,349	19,117	7,031	-	-	-	-	-	-	-	-	-
PNG Net Cash Flow	-	(7,349)	(19,117)	(7,031)	-	-	-	-	1,909	3,391	3,913	3,539	8,199
Real PNG Net Cash Flow	-	(7,002)	(17,719)	(6,339)	-	-	-	-	1,465	2,502	2,776	2,414	5,378
PNG Real Return on Equity	6.7%												
GASPROM RETURNS													
Gasprom Share of Common Stock		17%	17%	17%	16%	16%	16%	16%	16%	16%	16%	16%	16%
CS Dividends	-	-	-	-	-	-	-	-	11,776	20,914	24,133	21,824	50,562
Gasprom CS Dividends		-	-	-	-	-	-	-	1,909	3,391	3,913	3,539	8,199
Gasprom CS Dividends		-	-	-	-	-	-	-	1,909	3,391	3,913	3,539	8,199
Plus: Gasprom Transport Marginal Profit	-	-	-	-	-	-	-	-	-	-	-	-	-
Less: Gasprom Equity	-	7,349	19,117	7,031	-	-	-	-	-	-	-	-	-
Gasprom Net Cash Flow	-	(7,349)	(19,117)	(7,031)	-	-	-	-	1,909	3,391	3,913	3,539	8,199
Real Gasprom Net Cash Flow	-	(7,002)	(17,719)	(6,339)	-	-	-	-	1,465	2,502	2,776	2,414	5,378
Gasprom Real Return on Equity	6.7%												
FOREIGN INVESTOR RETURNS													
Foreign Share of Common Stock		50%	50%	50%	51%	51%	51%	51%	51%	51%	51%	51%	51%
CS Dividends	-	-	-	-	-	-	-	-	11,776	20,914	24,133	21,824	50,562
Foreign CS Dividends		-	-	-	-	-	-	-	6,048	10,741	12,394	11,208	25,966
Foreign CS Dividends		-	-	-	-	-	-	-	6,048	10,741	12,394	11,208	25,966
Less: Foreign Equity	-	22,047	57,352	21,092	-	-	-	-	-	-	-	-	-
Less: Additional Equity Investment	-	-	-	-	5,599	-	-	-	-	-	-	-	-
Foreign Net Cash Flow	-	(22,047)	(57,352)	(21,092)	(5,599)	-	-	-	6,048	10,741	12,394	11,208	25,966
Real Foreign Cash Flow	-	(21,007)	(53,158)	(19,017)	(4,911)	-	-	-	4,641	7,925	8,793	7,645	17,032
Foreign Real Return on Equity	6.8%												

165

1764

Page

SIBERIAN GASS PROCESSING PLANT
Equity Returns

(Thousands)

	2007	2008	2009	2010	2011	2012	2013	2014	2015	Total
EQUITY INVESTMENT										
SNGP Equity	-	-	-	-	-	-	-	-	-	33,497
PNG Equity	-	-	-	-	-	-	-	-	-	33,497
Gasprom Equity	-	-	-	-	-	-	-	-	-	33,497
Foreign Equity	-	-	-	-	-	-	-	-	-	100,490
Additional Equity	-	-	-	-	-	-	-	-	-	5,599
Total Equity	-	-	-	-	-	-	-	-	-	206,580
CUMULATIVE EQUITY INVESTMENT										
SNGP Equity Holdings	33,497	33,497	33,497	33,497	33,497	33,497	33,497	33,497	33,497	
PNG Equity Holdings	33,497	33,497	33,497	33,497	33,497	33,497	33,497	33,497	33,497	
Gasprom Equity Holdings	33,497	33,497	33,497	33,497	33,497	33,497	33,497	33,497	33,497	
Foreign Equity Holdings	106,090	106,090	106,090	106,090	106,090	106,090	106,090	106,090	106,090	
CS Equity Position	206,580	206,580	206,580	206,580	206,580	206,580	206,580	206,580	206,580	
PROJECT RETURN ON EQUITY										
CS Dividends	69,527	64,911	67,508	70,208	73,016	75,937	78,975	82,134	101,015	812,441
Less: Equity Investment	-	-	-	-	-	-	-	-	-	206,580
Net Cash Flow	69,527	64,911	67,508	70,208	73,016	75,937	78,975	82,134	101,015	605,861
Cumulative	(7,843)	57,069	124,576	194,785	267,801	343,738	422,713	504,846	605,861	
Real Net Cash Flow	43,850	39,364	39,364	39,364	39,364	39,364	39,364	39,364	46,551	264,316
Real Return on Equity										

SIBERIAN GASS PROCESSING PLANT
Equity Returns

(Thousands)

	2007	2008	2009	2010	2011	2012	2013	2014	2015	Total
SNGP RETURNS										
SNGP Share of Common Stock	16%	16%	16%	16%	16%	16%	16%	16%	16%	
CS Dividends	69,527	64,911	67,508	70,208	73,016	75,937	78,975	82,134	101,015	812,441
SNGP CS Dividends	11,274	10,525	10,946	11,384	11,840	12,313	12,806	13,318	16,379	131,737
SNGP CS Dividends	11,274	10,525	10,946	11,384	11,840	12,313	12,806	13,318	16,379	131,737
Plus: SNGP NGL Pipeline Marginal Profit	-	-	-	-	-	-	-	-	-	-
Less: SNGP Equity	-	-	-	-	-	-	-	-	-	33,497
SNGP Net Cash Flow	11,274	10,525	10,946	11,384	11,840	12,313	12,806	13,318	16,379	98,240
Real SNGP Net Cash Flow	7,110	6,383	6,383	6,383	6,383	6,383	6,383	6,383	7,548	42,813
SNGP Real Return on Equity										
PNG RETURNS										
PNG Share of Common Stock	16%	16%	16%	16%	16%	16%	16%	16%	16%	
CS Dividends	69,527	64,911	67,508	70,208	73,016	75,937	78,975	82,134	101,015	812,441
PNG CS Dividends	11,274	10,525	10,946	11,384	11,840	12,313	12,806	13,318	16,379	131,737
PNG CS Dividends	11,274	10,525	10,946	11,384	11,840	12,313	12,806	13,318	16,379	131,737
Plus: PNG Wet Gas Marginal Profit	-	-	-	-	-	-	-	-	-	-
Less: PNG Equity	-	-	-	-	-	-	-	-	-	33,497
PNG Net Cash Flow	11,274	10,525	10,946	11,384	11,840	12,313	12,806	13,318	16,379	98,240
Real PNG Net Cash Flow	7,110	6,383	6,383	6,383	6,383	6,383	6,383	6,383	7,548	42,813
PNG Real Return on Equity										
GASPROM RETURNS										
Gasprom Share of Common Stock	16%	16%	16%	16%	16%	16%	16%	16%	16%	
CS Dividends	69,527	64,911	67,508	70,208	73,016	75,937	78,975	82,134	101,015	812,441
Gasprom CS Dividends	11,274	10,525	10,946	11,384	11,840	12,313	12,806	13,318	16,379	131,737
Gasprom CS Dividends	11,274	10,525	10,946	11,384	11,840	12,313	12,806	13,318	16,379	131,737
Plus: Gasprom Transport Marginal Profit	-	-	-	-	-	-	-	-	-	-
Less: Gasprom Equity	-	-	-	-	-	-	-	-	-	33,497
Gasprom Net Cash Flow	11,274	10,525	10,946	11,384	11,840	12,313	12,806	13,318	16,379	98,240
Real Gasprom Net Cash Flow	7,110	6,383	6,383	6,383	6,383	6,383	6,383	6,383	7,548	42,813
Gasprom Real Return on Equity										
FOREIGN INVESTOR RETURNS										
Foreign Share of Common Stock	51%	51%	51%	51%	51%	51%	51%	51%	51%	
CS Dividends	69,527	64,911	67,508	70,208	73,016	75,937	78,975	82,134	101,015	812,441
Foreign CS Dividends	35,706	33,335	34,669	36,056	37,498	38,998	40,558	42,180	51,876	417,231
Foreign CS Dividends	35,706	33,335	34,669	36,056	37,498	38,998	40,558	42,180	51,876	417,231
Less: Foreign Equity	-	-	-	-	-	-	-	-	-	100,490
Less: Additional Equity Investment	-	-	-	-	-	-	-	-	-	5,599
Foreign Net Cash Flow	35,706	33,335	34,669	36,056	37,498	38,998	40,558	42,180	51,876	311,142
Real Foreign Cash Flow	22,519	20,216	20,216	20,216	20,216	20,216	20,216	20,216	23,906	135,877
Foreign Real Return on Equity										

167

156

SIBERIAN GAS PROCESSING PLANT
Data and Key Results

TIMING DATA

Cost Estimate Month	Oct 93	First, Last Operation Month	Jan 96	Dec 15
Financial Closing Month	Jan 95	Economic Life	20.00	

ENGINEERING DATA

	1994	1995	1996	1997	1998	1999	2000	2001
Rated Capacity (BCM/yr)in 1996, 1998	2.14	4.28						
Stream Factor		-	100%	100%	100%	100%	100%	100%
Operations Partial Year Factor	-	-	1.000	1.000	1.000	100%	100%	100%
Wet Gas Processed (MCM)	-	-	2.14	2.14	4.28	4.28	4.28	4.28
Dry Gas Production (BCM)	-	-	1.80	1.91	3.76	3.76	3.76	3.76
NGL Production (MMTons)	-	-	0.36	0.49	1.07	1.07	1.07	1.07

REVENUE DATA (1996 $'s)

NGL Domestic Price ($/Ton)	67.86	Domestic Gas Price ($/MCM)	17.09
NGL Export Price ($/Ton)	144.00	Export Gas Price ($/MCM)	90.00
% NGL for Export	100%	% Dry Gas for Export	100%

OPERATING COST DATA (1993 $000's)

Wet Gas Feedstock Cost ($/MCM)	-	
Chemicals Cost	764	
Utility Cost	38,864	
Maintenance Cost	1,970	
Labor Cost, Benefits	2,728	1,036
Other Expenses	20,268	

TRANSPORT COSTS (1996 $'s)

	DOM	EXP
Dry Gas In-Russia Costs ($/MCM)	-	40.00
Dry Gas Export Costs		32.00
NGL In-Russia Costs ($/Ton)	1.94	36.55
NGL Pipeline Costs	43.52	43.52
NGL Port Loading Charge		1.62
NGL Shipping Cost		15.10

CAPITAL COST DATA (1993 $000's)

	1995	1996	1997	Total
Gubkinsky GPP Expansion	43,700	157,500	90,300	291,500
Tarasovsky Gas Processing Plant	-	-	-	-
Gas Gathering Systems Cost	17,900	53,700	40,200	111,800
Metering Facilities Cost	440	1,290	970	2,700
Contributed Assets	9,843	26,104	15,686	51,632
Other Owners Costs	8,000	-	-	8,000
Infrastructure Costs	9,306	31,874	19,721	60,900
Initial Working Capital	2,839	-	-	2,839
Capital Costs	92,027	270,467	166,876	529,371

WORKING CAPITAL DATA

Days Receivables	45
Days Payables	45

FINANCING DATA

	WB/Other Loan	
% of Permanent Financing	70%	
Loan Amount, Commitment	426,677	426,680
Loan Interest Rate	8.15%	
Start of Repayment, Repayment Period	Jan 98	9.0
Commitment Fees %	0.25%	
Upfront Fee %	-	
Other Fin Fees & Close Costs (%, Amt)	-	

KEY RESULTS SUMMARY

Real Return on Investment (no taxes)	6.0%
Unleveraged Payback (Yrs)	8.6
Nominal NPV (Oct '93) @ 15.0%	(100349)
Real Return on Equity	0.2%
Leveraged Payback (Yrs)	14.6
Nominal NPV (Oct '93) @ 15.0%	(123366)
Min Debt Service Coverage	70%
Average Debt Service Coverage	90%

FINANCING DATA (cont'd)

	Actual
Required Reserves (1st Operating Yr)	39,881
Cash Flow Dedicated to Reserves	100%
Reinvestment Rate	3.0%

TAX DATA

Tax & Book In Service Month	Jan 96
Profits Tax	32.00%
15% Yr SL Property %	100.0%
Carryforward Years	5
VAT Tax (% of CapEx)	20.0%
Property Tax (% of Fixed Assets)	-
Road Tax (% of Revenues)	0.4%
Dry Gas Export Tariff ('93 $/MCM)	-
NGL Export Tariff ('93 $/Ton)	-

ECONOMIC DATA

Global Inflation Rate	2.8% **
Capital Cost Esc Rate	2.8%
O&M Esc Rate	2.8%
Export Gas Price Esc Rate	2.8%
Domestic Gas Price Esc Rate	2.8%
Export NGL Price Esc Rate	2.8%
Domestic NGL Price Esc Rate	2.8%

** Until 2000, 4% thereafter
(all escalation equivalent to inflation)

SENSITIVITY ANALYSIS FACTORS

O&M Cost	2.00
Gas Price	1.00
NGL Price	1.00
Capital Cost	1.00
Transport Cost	1.00
Wet Gas Price	1.00

SIBERIAN GAS PROCESSING PLANT
Annual Sources and Uses of Funds During Construction

($US Thousands)

	1995	1996	1997	Total	%
SOURCES OF FUNDS					
World Bank/Other Loan	68,899	210,531	147,248	426,677	70%
SIBNG Cash Equity	-	-	-	-	-
PNG Cash Equity	-	-	-	-	-
Gasprom Cash Equity	4,921	13,052	7,843	25,816	4%
SIBNG Equity	4,921	13,052	7,843	25,816	4%
PNG Equity	4,921	13,052	7,843	25,816	4%
Foreign Equity	14,764	39,156	23,529	77,448	13%
JV Operating Cash Flow	-	11,916	16,049	27,965	5%
Total Sources of Funds	98,427	300,758	210,354	609,539	100%
USES OF FUNDS					
Gubkinsky GPP Expansion	45,950	169,606	99,266	314,821	
Tarasovsky Gas Processing Plant	-	-	-	-	
Gas Gathering Systems Cost	18,820	57,765	44,281	120,866	
Metering Facilities Costs	463	1,388	1,068	2,919	
Infrastructure Costs	9,785	34,314	21,692	65,791	
Contributed Assets	9,843	26,104	15,686	51,632	
Other Owners Costs	8,281	-	-	8,281	
Initial Working Capital	3,000	-	-	3,000	
Capital Costs	96,141	289,175	181,994	567,309	93%
Other Loan Interest	1,260	10,860	28,184	40,305	
Other Loan Commitment Fees	1,026	723	176	1,925	
Upfront Fees	-	-	-	-	
Financing Costs	2,286	11,583	28,360	42,229	7%
Total Uses of Funds	98,427	300,758	210,354	609,539	100%

	$	%
Total Debt	426,677	70%
Operating Cash	27,965	5%
Equity Requirement	154,896	25%
	609,539	100%

MEMORANDA	WB/Other Loan	
Loan Draws, Amount	426,677	
Standby Facility	-	
Constr Loan Draws + Standby, Commitment	426,677	426,680
Constr Loan Int Rate	8.15%	
Commitment Fee Rate	0.25%	
Upfront Fee Rate	-	
Other Financing Fees (%, Amt)	-	
Repayment Period	9.0	

** NOTE: ANNUAL SANDU STATEMENT IS FOR PRESENTATION ONLY. VALUES ARE FROM QUARTERLY CALCULATIONS.

VAT TAX FUNDING				
VAT Tax	15,003	52,614	33,262	100,879
VAT Recovery Expressed in $'s	435	8,945	30,692	40,072
Net VAT Payment	14,569	43,669	2,570	60,807
PNG Cash Equity for VAT	2,428	7,278	428	10,135
SNGP Cash Equity for VAT	2,428	7,278	428	10,135
Gasprom Cash Equity for VAT	2,428	7,278	428	10,135
Foreign Equity for VAT	7,284	21,834	1,285	30,404
Cash Equity for VAT	14,569	43,669	2,570	60,807

Equity Requirement	154,896
Equity for VAT	60,807
Total Equity	215,704

REVISED CASE 1B.1: Wet Gas = Expected Tax; O&M @ +100%

SIBERIAN GASS PROCESSING PLANT
Equity Returns

(Thousands)

	1994	1995	1996	1997	1998	1999	2000	2001	2002	2003	2004	2005	2006
EQUITY INVESTMENT													
SNGP Equity	-	7,349	20,330	8,271	-	-	-	-	-	-	-	-	-
PNG Equity	-	7,349	20,330	8,271	-	-	-	-	-	-	-	-	-
Gasprom Equity	-	7,349	20,330	8,271	-	-	-	-	-	-	-	-	-
Foreign Equity	-	22,048	60,990	24,813	-	-	-	-	-	-	-	-	-
Additional Equity	-	-	-	-	23,887	5,032	11,317	16,268	10,427	4,503	-	-	-
Total Equity	-	44,097	121,980	49,627	23,887	5,032	11,317	16,268	10,427	4,503	-	-	-
CUMULATIVE EQUITY INVESTMENT													
SNGP Equity Holdings	-	7,349	27,679	35,951	35,951	35,951	35,951	35,951	35,951	35,951	35,951	35,951	35,951
PNG Equity Holdings	-	7,349	27,679	35,951	35,951	35,951	35,951	35,951	35,951	35,951	35,951	35,951	35,951
Gasprom Equity Holdings	-	7,349	27,679	35,951	35,951	35,951	35,951	35,951	35,951	35,951	35,951	35,951	35,951
Foreign Equity Holdings	-	22,048	83,038	107,852	131,739	136,771	148,088	164,356	174,783	179,286	179,286	179,286	179,286
CS Equity Position	-	44,097	166,077	215,704	239,591	244,623	255,940	272,208	282,635	287,138	287,138	287,138	287,138
PROJECT RETURN ON EQUITY													
CS Dividends	-	-	-	-	-	-	-	-	-	-	-	-	4,277
Less: Equity Investment	-	44,097	121,980	49,627	23,887	5,032	11,317	16,268	10,427	4,503	-	-	-
Net Cash Flow	-	(44,097)	(121,980)	(49,627)	(23,887)	(5,032)	(11,317)	(16,268)	(10,427)	(4,503)	-	-	4,277
Cumulative	-	(44,097)	(166,077)	(215,704)	(239,591)	(244,623)	(255,940)	(272,208)	(282,635)	(287,138)	(287,138)	(287,138)	(282,861)
Real Net Cash Flow	-	(42,016)	(113,060)	(44,745)	(20,951)	(4,294)	(9,392)	(12,982)	(8,001)	(3,322)	-	-	2,805
Real Return on Equity	0.2%												

SIBERIAN GASS PROCESSING PLANT
Equity Returns

(Thousands)

	1994	1995	1996	1997	1998	1999	2000	2001	2002	2003	2004	2005	2006
SNGP RETURNS													
SNGP Share of Common Stock		17%	17%	17%	15%	15%	14%	13%	13%	13%	13%	13%	13%
CS Dividends	-	-	-	-	-	-	-	-	-	-	-	-	4,277
SNGP CS Dividends		-	-	-	-	-	-	-	-	-	-	-	535
SNGP CS Dividends		-	-	-	-	-	-	-	-	-	-	-	535
Plus: SNGP NGL Pipeline Marginal Profit	-	-	-	-	-	-	-	-	-	-	-	-	-
Less: SNGP Equity	-	7,349	20,330	8,271	-	-	-	-	-	-	-	-	-
SNGP Net Cash Flow	-	(7,349)	(20,330)	(8,271)	-	-	-	-	-	-	-	-	535
Real SNGP Net Cash Flow	-	(7,003)	(18,843)	(7,457)	-	-	-	-	-	-	-	-	351
SNGP Real Return on Equity	#ARITH												
PNG RETURNS													
PNG Share of Common Stock		17%	17%	17%	15%	15%	14%	13%	13%	13%	13%	13%	13%
CS Dividends	-	-	-	-	-	-	-	-	-	-	-	-	4,277
PNG CS Dividends		-	-	-	-	-	-	-	-	-	-	-	535
PNG CS Dividends		-	-	-	-	-	-	-	-	-	-	-	535
Plus: PNG Wet Gas Marginal Profit	-	-	-	-	-	-	-	-	-	-	-	-	-
Less: PNG Equity	-	7,349	20,330	8,271	-	-	-	-	-	-	-	-	-
PNG Net Cash Flow	-	(7,349)	(20,330)	(8,271)	-	-	-	-	-	-	-	-	535
Real PNG Net Cash Flow	-	(7,003)	(18,843)	(7,457)	-	-	-	-	-	-	-	-	351
PNG Real Return on Equity	0.0%												
GASPROM RETURNS													
Gasprom Share of Common Stock		17%	17%	17%	15%	15%	14%	13%	13%	13%	13%	13%	13%
CS Dividends	-	-	-	-	-	-	-	-	-	-	-	-	4,277
Gasprom CS Dividends		-	-	-	-	-	-	-	-	-	-	-	535
Gasprom CS Dividends		-	-	-	-	-	-	-	-	-	-	-	535
Plus: Gasprom Transport Marginal Profit	-	-	-	-	-	-	-	-	-	-	-	-	-
Less: Gasprom Equity	-	7,349	20,330	8,271	-	-	-	-	-	-	-	-	-
Gasprom Net Cash Flow	-	(7,349)	(20,330)	(8,271)	-	-	-	-	-	-	-	-	535
Real Gasprom Net Cash Flow	-	(7,003)	(18,843)	(7,457)	-	-	-	-	-	-	-	-	351
Gasprom Real Return on Equity	#ARITH												
FOREIGN INVESTOR RETURNS													
Foreign Share of Common Stock		50%	50%	50%	55%	56%	58%	60%	62%	62%	62%	62%	62%
CS Dividends	-	-	-	-	-	-	-	-	-	-	-	-	4,277
Foreign CS Dividends		-	-	-	-	-	-	-	-	-	-	-	2,671
Foreign CS Dividends		-	-	-	-	-	-	-	-	-	-	-	2,671
Less: Foreign Equity	-	22,048	60,990	24,813	-	-	-	-	-	-	-	-	-
Less: Additional Equity Investment	-	-	-	-	23,887	5,032	11,317	16,268	10,427	4,503	-	-	-
Foreign Net Cash Flow	-	(22,048)	(60,990)	(24,813)	(23,887)	(5,032)	(11,317)	(16,268)	(10,427)	(4,503)	-	-	2,671
Real Foreign Cash Flow	-	(21,008)	(56,530)	(22,372)	(20,951)	(4,294)	(9,392)	(12,982)	(8,001)	(3,322)	-	-	1,752
Foreign Real Return on Equity	0.4%												

REVISED CASE 1B.1: Wet Gas = Expected Tax; O&M @ +100%

SIBERIAN GASS PROCESSING PLANT
Equity Returns

(Thousands)

	2007	2008	2009	2010	2011	2012	2013	2014	2015	Total
EQUITY INVESTMENT										
SNGP Equity	-	-	-	-	-	-	-	-	-	35,951
PNG Equity	-	-	-	-	-	-	-	-	-	35,951
Gasprom Equity	-	-	-	-	-	-	-	-	-	35,951
Foreign Equity	-	-	-	-	-	-	-	-	-	107,852
Additional Equity	-	-	-	-	-	-	-	-	-	71,434
Total Equity	-	-	-	-	-	-	-	-	-	287,138
CUMULATIVE EQUITY INVESTMENT										
SNGP Equity Holdings	35,951	35,951	35,951	35,951	35,951	35,951	35,951	35,951	35,951	
PNG Equity Holdings	35,951	35,951	35,951	35,951	35,951	35,951	35,951	35,951	35,951	
Gasprom Equity Holdings	35,951	35,951	35,951	35,951	35,951	35,951	35,951	35,951	35,951	
Foreign Equity Holdings	179,286	179,286	179,286	179,286	179,286	179,286	179,286	179,286	179,286	
CS Equity Position	287,138	287,138	287,138	287,138	287,138	287,138	287,138	287,138	287,138	
PROJECT RETURN ON EQUITY										
CS Dividends	53,366	46,642	48,507	50,448	52,465	54,564	56,747	59,017	72,583	498,616
Less: Equity Investment	-	-	-	-	-	-	-	-	-	287,138
Net Cash Flow	53,366	46,642	48,507	50,448	52,465	54,564	56,747	59,017	72,583	211,478
Cumulative	(229,494)	(182,853)	(134,346)	(83,898)	(31,432)	23,132	79,878	138,895	211,478	
Real Net Cash Flow	33,657	28,285	28,285	28,285	28,285	28,285	28,285	28,285	33,449	9,143
Real Return on Equity										

SIBERIAN GASS PROCESSING PLANT
Equity Returns

(Thousands)

	2007	2008	2009	2010	2011	2012	2013	2014	2015	Total
SNGP RETURNS										
SNGP Share of Common Stock	13%	13%	13%	13%	13%	13%	13%	13%	13%	
CS Dividends	53,366	46,642	48,507	50,448	52,465	54,564	56,747	59,017	72,583	498,616
SNGP CS Dividends	6,682	5,840	6,073	6,316	6,569	6,832	7,105	7,389	9,088	62,428
SNGP CS Dividends	6,682	5,840	6,073	6,316	6,569	6,832	7,105	7,389	9,088	62,428
Plus: SNGP NGL Pipeline Marginal Profit	-	-	-	-	-	-	-	-	-	-
Less: SNGP Equity	-	-	-	-	-	-	-	-	-	35,951
SNGP Net Cash Flow	6,682	5,840	6,073	6,316	6,569	6,832	7,105	7,389	9,088	26,478
Real SNGP Net Cash Flow	4,214	3,541	3,541	3,541	3,541	3,541	3,541	3,541	4,188	239
SNGP Real Return on Equity										
PNG RETURNS										
PNG Share of Common Stock	13%	13%	13%	13%	13%	13%	13%	13%	13%	
CS Dividends	53,366	46,642	48,507	50,448	52,465	54,564	56,747	59,017	72,583	498,616
PNG CS Dividends	6,682	5,840	6,073	6,316	6,569	6,832	7,105	7,389	9,088	62,428
PNG CS Dividends	6,682	5,840	6,073	6,316	6,569	6,832	7,105	7,389	9,088	62,428
Plus: PNG Wet Gas Marginal Profit	-	-	-	-	-	-	-	-	-	-
Less: PNG Equity	-	-	-	-	-	-	-	-	-	35,951
PNG Net Cash Flow	6,682	5,840	6,073	6,316	6,569	6,832	7,105	7,389	9,088	26,478
Real PNG Net Cash Flow	4,214	3,541	3,541	3,541	3,541	3,541	3,541	3,541	4,188	239
PNG Real Return on Equity										
GASPROM RETURNS										
Gasprom Share of Common Stock	13%	13%	13%	13%	13%	13%	13%	13%	13%	
CS Dividends	53,366	46,642	48,507	50,448	52,465	54,564	56,747	59,017	72,583	498,616
Gasprom CS Dividends	6,682	5,840	6,073	6,316	6,569	6,832	7,105	7,389	9,088	62,428
Gasprom CS Dividends	6,682	5,840	6,073	6,316	6,569	6,832	7,105	7,389	9,088	62,428
Plus: Gasprom Transport Marginal Profit	-	-	-	-	-	-	-	-	-	-
Less: Gasprom Equity	-	-	-	-	-	-	-	-	-	35,951
Gasprom Net Cash Flow	6,682	5,840	6,073	6,316	6,569	6,832	7,105	7,389	9,088	26,478
Real Gasprom Net Cash Flow	4,214	3,541	3,541	3,541	3,541	3,541	3,541	3,541	4,188	239
Gasprom Real Return on Equity										
FOREIGN INVESTOR RETURNS										
Foreign Share of Common Stock	62%	62%	62%	62%	62%	62%	62%	62%	62%	
CS Dividends	53,366	46,642	48,507	50,448	52,465	54,564	56,747	59,017	72,583	498,616
Foreign CS Dividends	33,321	29,123	30,287	31,499	32,759	34,069	35,432	36,849	45,320	311,331
Foreign CS Dividends	33,321	29,123	30,287	31,499	32,759	34,069	35,432	36,849	45,320	311,331
Less: Foreign Equity	-	-	-	-	-	-	-	-	-	107,852
Less: Additional Equity Investment	-	-	-	-	-	-	-	-	-	71,434
Foreign Net Cash Flow	33,321	29,123	30,287	31,499	32,759	34,069	35,432	36,849	45,320	132,045
Real Foreign Cash Flow	21,015	17,661	17,661	17,661	17,661	17,661	17,661	17,661	20,885	8,425
Foreign Real Return on Equity										

173

SIBERIAN GAS PROCESSING PLANT
Data and Key Results

TIMING DATA

Cost Estimate Month	Oct 93	First, Last Operation Month	Jan 96	Dec 15
Financial Closing Month	Jan 95	Economic Life	20.00	

ENGINEERING DATA

	1994	1995	1996	1997	1998	1999	2000	2001
Rated Capacity (BCM/yr)in 1996, 1998	2.14	4.28						
Stream Factor		-	100%	100%	100%	100%	100%	100%
Operations Partial Year Factor	-	-	1.000	1.000	1.000	100%	100%	100%
Wet Gas Processed (MCM)	-	-	2.14	2.14	4.28	4.28	4.28	4.28
Dry Gas Production (BCM)	-	-	1.80	1.91	3.76	3.76	3.76	3.76
NGL Production (MMTons)	-	-	0.36	0.49	1.07	1.07	1.07	1.07

REVENUE DATA (1996 $'s)

NGL Domestic Price ($/Ton)	67.86	Domestic Gas Price ($/MCM)	17.09
NGL Export Price ($/Ton)	144.00	Export Gas Price ($/MCM)	90.00
% NGL for Export	100%	% Dry Gas for Export	100%

OPERATING COST DATA (1993 $000's)

Wet Gas Feedstock Cost ($/MCM)	-	
Chemicals Cost	955	
Utility Cost	48,580	
Maintenance Cost	2,463	
Labor Cost, Benefits	3,410	1,295
Other Expenses	25,335	

TRANSPORT COSTS (1996 $'s)

	DOM	EXP
Dry Gas In-Russia Costs ($/MCM)	-	40.00
Dry Gas Export Costs		32.00
NGL In-Russia Costs ($/Ton)	1.94	36.55
NGL Pipeline Costs	43.52	43.52
NGL Port Loading Charge		1.62
NGL Shipping Cost		15.10

CAPITAL COST DATA (1993 $000's)

	1995	1996	1997	Total
Gubkinsky GPP Expansion	43,700	157,500	90,300	291,500
Tarasovsky Gas Processing Plant	-	-	-	-
Gas Gathering Systems Cost	17,900	53,700	40,200	111,800
Metering Facilities Cost	440	1,290	970	2,700
Contributed Assets	9,844	29,212	18,794	57,850
Other Owners Costs	8,000	-	-	8,000
Infrastructure Costs	9,306	31,874	19,721	60,900
Initial Working Capital	2,839	-	-	2,839
Capital Costs	92,029	273,575	169,984	535,589

WORKING CAPITAL DATA

Days Receivables	45
Days Payables	45

FINANCING DATA

	WB/Other Loan	
% of Permanent Financing	70%	
Loan Amount, Commitment	431,265	431,265
Loan Interest Rate	8.15%	
Start of Repayment, Repayment Period	Jan 98	9.0
Commitment Fees %	0.25%	
Upfront Fee %	-	
Other Fin Fees & Close Costs (%, Amt)	-	

KEY RESULTS SUMMARY

Real Return on Investment (no taxes)	0.5%
Unleveraged Payback (Yrs)	13.0
Nominal NPV (Oct '93) @ 15.0%	(187454)
Real Return on Equity	(351.1%)
Leveraged Payback (Yrs)	-
Nominal NPV (Oct '93) @ 15.0%	(203534)
Min Debt Service Coverage	46%
Average Debt Service Coverage	57%

FINANCING DATA (cont'd)

	Actual
Required Reserves (1st Operating Yr)	40,309
Cash Flow Dedicated to Reserves	100%
Reinvestment Rate	3.0%

TAX DATA

Tax & Book In Service Month	Jan 96
Profits Tax	32.00%
15% Yr SL Property %	100.0%
Carryforward Years	5
VAT Tax (% of CapEx)	20.0%
Property Tax (% of Fixed Assets)	-
Road Tax (% of Revenues)	0.4%
Dry Gas Export Tariff ('93 $/MCM)	-
NGL Export Tariff ('93 $/Ton)	-

ECONOMIC DATA

Global Inflation Rate	2.8% **
Capital Cost Esc Rate	2.8%
O&M Esc Rate	2.8%
Export Gas Price Esc Rate	2.8%
Domestic Gas Price Esc Rate	2.8%
Export NGL Price Esc Rate	2.8%
Domestic NGL Price Esc Rate	2.8%

** Until 2000, 4% thereafter
(all escalation equivalent to inflation)

SENSITIVITY ANALYSIS FACTORS

O&M Cost	2.50
Gas Price	1.00
NGL Price	1.00
Capital Cost	1.00
Transport Cost	1.00
Wet Gas Price	1.00

SIBERIAN GAS PROCESSING PLANT
Annual Sources and Uses of Funds During Construction

($US Thousands)

	1995	1996	1997	Total	%
SOURCES OF FUNDS					
World Bank/Other Loan	68,908	212,759	149,598	431,265	70%
SIBNG Cash Equity	-	-	-	-	-
PNG Cash Equity	-	-	-	-	-
Gasprom Cash Equity	4,922	14,606	9,397	28,925	5%
SIBNG Equity	4,922	14,606	9,397	28,925	5%
PNG Equity	4,922	14,606	9,397	28,925	5%
Foreign Equity	14,766	43,818	28,191	86,775	14%
JV Operating Cash Flow	-	3,547	7,732	11,278	2%
Total Sources of Funds	98,440	303,942	213,712	616,093	100%
USES OF FUNDS					
Gubkinsky GPP Expansion	45,950	169,606	99,266	314,821	
Tarasovsky Gas Processing Plant	-	-	-	-	
Gas Gathering Systems Cost	18,820	57,765	44,281	120,866	
Metering Facilities Costs	463	1,388	1,068	2,919	
Infrastructure Costs	9,785	34,314	21,692	65,791	
Contributed Assets	9,844	29,212	18,794	57,850	
Other Owners Costs	8,281	-	-	8,281	
Initial Working Capital	3,000	-	-	3,000	
Capital Costs	96,142	292,283	185,102	573,527	93%
Other Loan Interest	1,261	10,926	28,430	40,617	
Other Loan Commitment Fees	1,037	732	180	1,949	
Upfront Fees	-	-	-	-	
Financing Costs	2,298	11,658	28,610	42,566	7%
Total Uses of Funds	98,440	303,942	213,712	616,093	100%

	$	%
Total Debt	431,265	70%
Operating Cash	11,278	2%
Equity Requirement	173,550	28%
	616,093	100%

MEMORANDA	WB/Other Loan	
Loan Draws, Amount	431,265	
Standby Facility	-	
Constr Loan Draws + Standby, Commitment	431,265	431,265
Constr Loan Int Rate	8.15%	
Commitment Fee Rate	0.25%	
Upfront Fee Rate	-	
Other Financing Fees (%, Amt)	-	
Repayment Period	9.0	

** NOTE: ANNUAL SANDU STATEMENT IS FOR PRESENTATION ONLY. VALUES ARE FROM QUARTERLY CALCULATIONS.

VAT TAX FUNDING				
VAT Tax	15,003	52,614	33,262	100,879
VAT Recovery Expressed in $'s	435	8,945	30,692	40,072
Net VAT Payment	14,569	43,669	2,570	60,807
PNG Cash Equity for VAT	2,428	7,278	428	10,135
SNGP Cash Equity for VAT	2,428	7,278	428	10,135
Gasprom Cash Equity for VAT	2,428	7,278	428	10,135
Foreign Equity for VAT	7,284	21,834	1,285	30,404
Cash Equity for VAT	14,569	43,669	2,570	60,807

Equity Requirement	173,550
Equity for VAT	60,807
Total Equity	234,357

REVISED CASE 1B.1: Wet Gas = Expected Tax; O&M @ +150%

SIBERIAN GASS PROCESSING PLANT
Equity Returns

(Thousands)

	1994	1995	1996	1997	1998	1999	2000	2001	2002	2003	2004	2005	2006
EQUITY INVESTMENT													
SNGP Equity	-	7,350	21,884	9,825	-	-	-	-	-	-	-	-	-
PNG Equity	-	7,350	21,884	9,825	-	-	-	-	-	-	-	-	-
Gasprom Equity	-	7,350	21,884	9,825	-	-	-	-	-	-	-	-	-
Foreign Equity	-	22,050	65,652	29,476	-	-	-	-	-	-	-	-	-
Additional Equity	-	-	-	-	42,356	25,016	31,797	37,467	32,405	27,291	22,125	21,895	17,462
Total Equity	-	44,101	131,305	58,952	42,356	25,016	31,797	37,467	32,405	27,291	22,125	21,895	17,462
CUMULATIVE EQUITY INVESTMENT													
SNGP Equity Holdings	-	7,350	29,234	39,060	39,060	39,060	39,060	39,060	39,060	39,060	39,060	39,060	39,060
PNG Equity Holdings	-	7,350	29,234	39,060	39,060	39,060	39,060	39,060	39,060	39,060	39,060	39,060	39,060
Gasprom Equity Holdings	-	7,350	29,234	39,060	39,060	39,060	39,060	39,060	39,060	39,060	39,060	39,060	39,060
Foreign Equity Holdings	-	22,050	87,703	117,179	159,534	184,550	216,347	253,814	286,219	313,511	335,636	357,531	374,993
CS Equity Position	-	44,101	175,406	234,357	276,713	301,729	333,526	370,993	403,398	430,689	452,815	474,709	492,171
PROJECT RETURN ON EQUITY													
CS Dividends	-	-	-	-	-	-	-	-	-	-	-	-	-
Less: Equity Investment	-	44,101	131,305	58,952	42,356	25,016	31,797	37,467	32,405	27,291	22,125	21,895	17,462
Net Cash Flow	-	(44,101)	(131,305)	(58,952)	(42,356)	(25,016)	(31,797)	(37,467)	(32,405)	(27,291)	(22,125)	(21,895)	(17,462)
Cumulative	-	(44,101)	(175,406)	(234,357)	(276,713)	(301,729)	(333,526)	(370,993)	(403,398)	(430,689)	(452,815)	(474,709)	(492,171)
Real Net Cash Flow	-	(42,020)	(121,702)	(53,152)	(37,149)	(21,343)	(26,389)	(29,900)	(24,865)	(20,136)	(15,696)	(14,935)	(11,454)
Real Return on Equity	(351.1%)												

SIBERIAN GASS PROCESSING PLANT
Equity Returns

(Thousands)

	1994	1995	1996	1997	1998	1999	2000	2001	2002	2003	2004	2005	2006
SNGP RETURNS													
SNGP Share of Common Stock		17%	17%	17%	14%	13%	12%	11%	10%	9%	9%	8%	8%
CS Dividends	-	-	-	-	-	-	-	-	-	-	-	-	-
SNGP CS Dividends		-	-	-	-	-	-	-	-	-	-	-	-
SNGP CS Dividends		-	-	-	-	-	-	-	-	-	-	-	-
Plus: SNGP NGL Pipeline Marginal Profit	-	-	-	-	-	-	-	-	-	-	-	-	-
Less: SNGP Equity	-	7,350	21,884	9,825	-	-	-	-	-	-	-	-	-
SNGP Net Cash Flow	-	(7,350)	(21,884)	(9,825)	-	-	-	-	-	-	-	-	-
Real SNGP Net Cash Flow	-	(7,003)	(20,284)	(8,859)	-	-	-	-	-	-	-	-	-
SNGP Real Return on Equity	#ARITH												
PNG RETURNS													
PNG Share of Common Stock		17%	17%	17%	14%	13%	12%	11%	10%	9%	9%	8%	8%
CS Dividends	-	-	-	-	-	-	-	-	-	-	-	-	-
PNG CS Dividends		-	-	-	-	-	-	-	-	-	-	-	-
PNG CS Dividends		-	-	-	-	-	-	-	-	-	-	-	-
Plus: PNG Wet Gas Marginal Profit	-	-	-	-	-	-	-	-	-	-	-	-	-
Less: PNG Equity	-	7,350	21,884	9,825	-	-	-	-	-	-	-	-	-
PNG Net Cash Flow	-	(7,350)	(21,884)	(9,825)	-	-	-	-	-	-	-	-	-
Real PNG Net Cash Flow	-	(7,003)	(20,284)	(8,859)	-	-	-	-	-	-	-	-	-
PNG Real Return on Equity	(6.4%)												
GASPROM RETURNS													
Gasprom Share of Common Stock		17%	17%	17%	14%	13%	12%	11%	10%	9%	9%	8%	8%
CS Dividends	-	-	-	-	-	-	-	-	-	-	-	-	-
Gasprom CS Dividends		-	-	-	-	-	-	-	-	-	-	-	-
Gasprom CS Dividends		-	-	-	-	-	-	-	-	-	-	-	-
Plus: Gasprom Transport Marginal Profit	-	-	-	-	-	-	-	-	-	-	-	-	-
Less: Gasprom Equity	-	7,350	21,884	9,825	-	-	-	-	-	-	-	-	-
Gasprom Net Cash Flow	-	(7,350)	(21,884)	(9,825)	-	-	-	-	-	-	-	-	-
Real Gasprom Net Cash Flow	-	(7,003)	(20,284)	(8,859)	-	-	-	-	-	-	-	-	-
Gasprom Real Return on Equity	#ARITH												
FOREIGN INVESTOR RETURNS													
Foreign Share of Common Stock		50%	50%	50%	58%	61%	65%	68%	71%	73%	74%	75%	76%
CS Dividends	-	-	-	-	-	-	-	-	-	-	-	-	-
Foreign CS Dividends		-	-	-	-	-	-	-	-	-	-	-	-
Foreign CS Dividends		-	-	-	-	-	-	-	-	-	-	-	-
Less: Foreign Equity	-	22,050	65,652	29,476	-	-	-	-	-	-	-	-	-
Less: Additional Equity Investment	-	-	-	-	42,356	25,016	31,797	37,467	32,405	27,291	22,125	21,895	17,462
Foreign Net Cash Flow	-	(22,050)	(65,652)	(29,476)	(42,356)	(25,016)	(31,797)	(37,467)	(32,405)	(27,291)	(22,125)	(21,895)	(17,462)
Real Foreign Cash Flow	-	(21,010)	(60,851)	(26,576)	(37,149)	(21,343)	(26,389)	(29,900)	(24,865)	(20,136)	(15,696)	(14,935)	(11,454)
Foreign Real Return on Equity	#ARITH												

177

1766

SIBERIAN GASS PROCESSING PLANT
Equity Returns

(Thousands)

	2007	2008	2009	2010	2011	2012	2013	2014	2015	Total
EQUITY INVESTMENT										
SNGP Equity	-	-	-	-	-	-	-	-	-	39,060
PNG Equity	-	-	-	-	-	-	-	-	-	39,060
Gasprom Equity	-	-	-	-	-	-	-	-	-	39,060
Foreign Equity	-	-	-	-	-	-	-	-	-	117,179
Additional Equity	-	-	-	-	-	-	-	-	-	257,814
Total Equity	-	-	-	-	-	-	-	-	-	492,171
CUMULATIVE EQUITY INVESTMENT										
SNGP Equity Holdings	39,060	39,060	39,060	39,060	39,060	39,060	39,060	39,060	39,060	
PNG Equity Holdings	39,060	39,060	39,060	39,060	39,060	39,060	39,060	39,060	39,060	
Gasprom Equity Holdings	39,060	39,060	39,060	39,060	39,060	39,060	39,060	39,060	39,060	
Foreign Equity Holdings	374,993	374,993	374,993	374,993	374,993	374,993	374,993	374,993	374,993	
CS Equity Position	492,171	492,171	492,171	492,171	492,171	492,171	492,171	492,171	492,171	
PROJECT RETURN ON EQUITY										
CS Dividends	33,745	35,094	32,128	30,687	31,914	33,191	34,519	35,899	44,152	311,330
Less: Equity Investment	-	-	-	-	-	-	-	-	-	492,171
Net Cash Flow	33,745	35,094	32,128	30,687	31,914	33,191	34,519	35,899	44,152	(180,841)
Cumulative	(458,427)	(423,332)	(391,204)	(360,517)	(328,603)	(295,412)	(260,893)	(224,993)	(180,841)	
Real Net Cash Flow	21,282	21,282	18,734	17,206	17,206	17,206	17,206	17,206	20,347	(251,069)
Real Return on Equity										

SIBERIAN GASS PROCESSING PLANT
Equity Returns

(Thousands)

	2007	2008	2009	2010	2011	2012	2013	2014	2015	Total
SNGP RETURNS										
SNGP Share of Common Stock	8%	8%	8%	8%	8%	8%	8%	8%	8%	
CS Dividends	33,745	35,094	32,128	30,687	31,914	33,191	34,519	35,899	44,152	311,330
SNGP CS Dividends	2,678	2,785	2,550	2,435	2,533	2,634	2,739	2,849	3,504	24,708
SNGP CS Dividends	2,678	2,785	2,550	2,435	2,533	2,634	2,739	2,849	3,504	24,708
Plus: SNGP NGL Pipeline Marginal Profit	-	-	-	-	-	-	-	-	-	-
Less: SNGP Equity	-	-	-	-	-	-	-	-	-	39,060
SNGP Net Cash Flow	2,678	2,785	2,550	2,435	2,533	2,634	2,739	2,849	3,504	(14,352)
Real SNGP Net Cash Flow	1,689	1,689	1,487	1,365	1,365	1,365	1,365	1,365	1,615	(22,839)
SNGP Real Return on Equity										
PNG RETURNS										
PNG Share of Common Stock	8%	8%	8%	8%	8%	8%	8%	8%	8%	
CS Dividends	33,745	35,094	32,128	30,687	31,914	33,191	34,519	35,899	44,152	311,330
PNG CS Dividends	2,678	2,785	2,550	2,435	2,533	2,634	2,739	2,849	3,504	24,708
PNG CS Dividends	2,678	2,785	2,550	2,435	2,533	2,634	2,739	2,849	3,504	24,708
Plus: PNG Wet Gas Marginal Profit	-	-	-	-	-	-	-	-	-	-
Less: PNG Equity	-	-	-	-	-	-	-	-	-	39,060
PNG Net Cash Flow	2,678	2,785	2,550	2,435	2,533	2,634	2,739	2,849	3,504	(14,352)
Real PNG Net Cash Flow	1,689	1,689	1,487	1,365	1,365	1,365	1,365	1,365	1,615	(22,839)
PNG Real Return on Equity										
GASPROM RETURNS										
Gasprom Share of Common Stock	8%	8%	8%	8%	8%	8%	8%	8%	8%	
CS Dividends	33,745	35,094	32,128	30,687	31,914	33,191	34,519	35,899	44,152	311,330
Gasprom CS Dividends	2,678	2,785	2,550	2,435	2,533	2,634	2,739	2,849	3,504	24,708
Gasprom CS Dividends	2,678	2,785	2,550	2,435	2,533	2,634	2,739	2,849	3,504	24,708
Plus: Gasprom Transport Marginal Profit	-	-	-	-	-	-	-	-	-	-
Less: Gasprom Equity	-	-	-	-	-	-	-	-	-	39,060
Gasprom Net Cash Flow	2,678	2,785	2,550	2,435	2,533	2,634	2,739	2,849	3,504	(14,352)
Real Gasprom Net Cash Flow	1,689	1,689	1,487	1,365	1,365	1,365	1,365	1,365	1,615	(22,839)
Gasprom Real Return on Equity										
FOREIGN INVESTOR RETURNS										
Foreign Share of Common Stock	76%	76%	76%	76%	76%	76%	76%	76%	76%	
CS Dividends	33,745	35,094	32,128	30,687	31,914	33,191	34,519	35,899	44,152	311,330
Foreign CS Dividends	25,711	26,739	24,479	23,381	24,316	25,289	26,300	27,352	33,640	237,207
Foreign CS Dividends	25,711	26,739	24,479	23,381	24,316	25,289	26,300	27,352	33,640	237,207
Less: Foreign Equity	-	-	-	-	-	-	-	-	-	117,179
Less: Additional Equity Investment	-	-	-	-	-	-	-	-	-	257,814
Foreign Net Cash Flow	25,711	26,739	24,479	23,381	24,316	25,289	26,300	27,352	33,640	(137,786)
Real Foreign Cash Flow	16,215	16,215	14,274	13,109	13,109	13,109	13,109	13,109	15,503	(182,552)
Foreign Real Return on Equity										

SIBERIAN GAS PROCESSING PLANT
Data and Key Results

TIMING DATA

Cost Estimate Month	Oct 93	First, Last Operation Month	Jan 96	Dec 15
Financial Closing Month	Jan 95	Economic Life	20.00	

ENGINEERING DATA

	1994	1995	1996	1997	1998	1999	2000	2001
Rated Capacity (BCM/yr)in 1996, 1998	2.14	4.28						
Stream Factor		-	100%	100%	100%	100%	100%	100%
Operations Partial Year Factor	-	-	1.000	1.000	1.000	100%	100%	100%
Wet Gas Processed (MCM)	-	-	2.14	2.14	4.28	4.28	4.28	4.28
Dry Gas Production (BCM)	-	-	1.80	1.91	3.76	3.76	3.76	3.76
NGL Production (MMTons)	-	-	0.36	0.49	1.07	1.07	1.07	1.07

REVENUE DATA (1996 $'s)

NGL Domestic Price ($/Ton)	67.86	Domestic Gas Price ($/MCM)	17.09
NGL Export Price ($/Ton)	144.00	Export Gas Price ($/MCM)	90.00
% NGL for Export	100%	% Dry Gas for Export	100%

OPERATING COST DATA (1993 $000's)

Wet Gas Feedstock Cost ($/MCM)	-	
Chemicals Cost	382	
Utility Cost	19,432	
Maintenance Cost	985	
Labor Cost, Benefits	1,364	518
Other Expenses	10,134	

TRANSPORT COSTS (1996 $'s)

	DOM	EXP
Dry Gas In-Russia Costs ($/MCM)	-	46.00
Dry Gas Export Costs		36.80
NGL In-Russia Costs ($/Ton)	2.23	42.04
NGL Pipeline Costs	50.05	50.05
NGL Port Loading Charge		1.86
NGL Shipping Cost		17.37

CAPITAL COST DATA (1993 $000's)

	1995	1996	1997	Total
Gubkinsky GPP Expansion	43,700	157,500	90,300	291,500
Tarasovsky Gas Processing Plant	-	-	-	-
Gas Gathering Systems Cost	17,900	53,700	40,200	111,800
Metering Facilities Cost	440	1,290	970	2,700
Contributed Assets	9,844	27,904	18,259	56,006
Other Owners Costs	8,000	-	-	8,000
Infrastructure Costs	9,306	31,874	19,721	60,900
Initial Working Capital	2,839	-	-	2,839
Capital Costs	92,028	272,267	169,449	533,745

WORKING CAPITAL DATA

Days Receivables	45
Days Payables	45

FINANCING DATA

	WB/Other Loan	
% of Permanent Financing	70%	
Loan Amount, Commitment	429,889	429,900
Loan Interest Rate	8.15%	
Start of Repayment, Repayment Period	Jan 98	9.0
Commitment Fees %	0.25%	
Upfront Fee %	-	
Other Fin Fees & Close Costs (%, Amt)	-	

KEY RESULTS SUMMARY

Real Return on Investment (no taxes)	(0.4%)
Unleveraged Payback (Yrs)	14.0
Nominal NPV (Oct '93) @ 15.0%	(197064)
Real Return on Equity	(8.4%)
Leveraged Payback (Yrs)	-
Nominal NPV (Oct '93) @ 15.0%	(210487)
Min Debt Service Coverage	41%
Average Debt Service Coverage	51%

FINANCING DATA (cont'd)

	Actual
Required Reserves (1st Operating Yr)	40,181
Cash Flow Dedicated to Reserves	100%
Reinvestment Rate	3.0%

TAX DATA

Tax & Book In Service Month	Jan 96
Profits Tax	32.00%
15% Yr SL Property %	100.0%
Carryforward Years	5
VAT Tax (% of CapEx)	20.0%
Property Tax (% of Fixed Assets)	-
Road Tax (% of Revenues)	0.4%
Dry Gas Export Tariff ('93 $/MCM)	-
NGL Export Tariff ('93 $/Ton)	-

ECONOMIC DATA

Global Inflation Rate	2.8% **
Capital Cost Esc Rate	2.8%
O&M Esc Rate	2.8%
Export Gas Price Esc Rate	2.8%
Domestic Gas Price Esc Rate	2.8%
Export NGL Price Esc Rate	2.8%
Domestic NGL Price Esc Rate	2.8%

** Until 2000, 4% thereafter
(all escalation equivalent to inflation)

SENSITIVITY ANALYSIS FACTORS

O&M Cost	1.00
Gas Price	1.00
NGL Price	1.00
Capital Cost	1.00
Transport Cost	1.15
Wet Gas Price	1.00

SIBERIAN GAS PROCESSING PLANT
Annual Sources and Uses of Funds During Construction

($US Thousands)

	1995	1996	1997	Total	%
SOURCES OF FUNDS					
World Bank/Other Loan	68,905	211,822	149,162	429,889	70%
SIBNG Cash Equity	-	-	-	-	-
PNG Cash Equity	-	-	-	-	-
Gasprom Cash Equity	4,922	13,952	9,129	28,003	5%
SIBNG Equity	4,922	13,952	9,129	28,003	5%
PNG Equity	4,922	13,952	9,129	28,003	5%
Foreign Equity	14,765	41,855	27,388	84,009	14%
JV Operating Cash Flow	-	7,070	9,151	16,221	3%
Total Sources of Funds	98,436	302,603	213,089	614,128	100%
USES OF FUNDS					
Gubkinsky GPP Expansion	45,950	169,606	99,266	314,821	
Tarasovsky Gas Processing Plant	-	-	-	-	
Gas Gathering Systems Cost	18,820	57,765	44,281	120,866	
Metering Facilities Costs	463	1,388	1,068	2,919	
Infrastructure Costs	9,785	34,314	21,692	65,791	
Contributed Assets	9,844	27,904	18,259	56,006	
Other Owners Costs	8,281	-	-	8,281	
Initial Working Capital	3,000	-	-	3,000	
Capital Costs	96,142	290,975	184,567	571,683	93%
Other Loan Interest	1,261	10,898	28,343	40,502	
Other Loan Commitment Fees	1,034	730	179	1,943	
Upfront Fees	-	-	-	-	
Financing Costs	2,295	11,628	28,522	42,445	7%
Total Uses of Funds	98,436	302,603	213,089	614,128	100%

	$	%
Total Debt	429,889	70%
Operating Cash	16,221	3%
Equity Requirement	168,017	27%
	614,128	100%

MEMORANDA	WB/Other Loan	
Loan Draws, Amount	429,889	
Standby Facility	-	
Constr Loan Draws + Standby, Commitment	429,889	429,900
Constr Loan Int Rate	8.15%	
Commitment Fee Rate	0.25%	
Upfront Fee Rate	-	
Other Financing Fees (%, Amt)	-	
Repayment Period	9.0	

** NOTE: ANNUAL SANDU STATEMENT IS FOR PRESENTATION ONLY. VALUES ARE FROM QUARTERLY CALCULATIONS.

VAT TAX FUNDING				
VAT Tax	15,003	52,614	33,262	100,879
VAT Recovery Expressed in $'s	435	8,945	30,692	40,072
Net VAT Payment	14,569	43,669	2,570	60,807
PNG Cash Equity for VAT	2,428	7,278	428	10,135
SNGP Cash Equity for VAT	2,428	7,278	428	10,135
Gasprom Cash Equity for VAT	2,428	7,278	428	10,135
Foreign Equity for VAT	7,284	21,834	1,285	30,404
Cash Equity for VAT	14,569	43,669	2,570	60,807

Equity Requirement	168,017
Equity for VAT	60,807
Total Equity	228,825

SIBERIAN GASS PROCESSING PLANT
Equity Returns

(Thousands)

	1994	1995	1996	1997	1998	1999	2000	2001	2002	2003	2004	2005	2006
EQUITY INVESTMENT													
SNGP Equity	-	7,350	21,230	9,558	-	-	-	-	-	-	-	-	-
PNG Equity	-	7,350	21,230	9,558	-	-	-	-	-	-	-	-	-
Gasprom Equity	-	7,350	21,230	9,558	-	-	-	-	-	-	-	-	-
Foreign Equity	-	22,050	63,690	28,673	-	-	-	-	-	-	-	-	-
Additional Equity	-	-	-	-	44,715	27,980	34,863	40,672	35,759	30,800	25,795	25,089	20,801
Total Equity	-	44,100	127,380	57,346	44,715	27,980	34,863	40,672	35,759	30,800	25,795	25,089	20,801
CUMULATIVE EQUITY INVESTMENT													
SNGP Equity Holdings	-	7,350	28,580	38,137	38,137	38,137	38,137	38,137	38,137	38,137	38,137	38,137	38,137
PNG Equity Holdings	-	7,350	28,580	38,137	38,137	38,137	38,137	38,137	38,137	38,137	38,137	38,137	38,137
Gasprom Equity Holdings	-	7,350	28,580	38,137	38,137	38,137	38,137	38,137	38,137	38,137	38,137	38,137	38,137
Foreign Equity Holdings	-	22,050	85,740	114,412	159,127	187,107	221,970	262,642	298,401	329,202	354,996	380,085	400,886
CS Equity Position	-	44,100	171,479	228,825	273,539	301,520	336,382	377,055	412,814	443,614	469,409	494,498	515,299
PROJECT RETURN ON EQUITY													
CS Dividends	-	-	-	-	-	-	-	-	-	-	-	-	-
Less: Equity Investment	-	44,100	127,380	57,346	44,715	27,980	34,863	40,672	35,759	30,800	25,795	25,089	20,801
Net Cash Flow	-	(44,100)	(127,380)	(57,346)	(44,715)	(27,980)	(34,863)	(40,672)	(35,759)	(30,800)	(25,795)	(25,089)	(20,801)
Cumulative	-	(44,100)	(171,479)	(228,825)	(273,539)	(301,520)	(336,382)	(377,055)	(412,814)	(443,614)	(469,409)	(494,498)	(515,299)
Real Net Cash Flow	-	(42,019)	(118,064)	(51,704)	(39,218)	(23,872)	(28,934)	(32,457)	(27,439)	(22,725)	(18,300)	(17,114)	(13,644)
Real Return on Equity	(8.4%)												

SIBERIAN GASS PROCESSING PLANT
Equity Returns
(Thousands)

	1994	1995	1996	1997	1998	1999	2000	2001	2002	2003	2004	2005	2006
SNGP RETURNS													
SNGP Share of Common Stock		17%	17%	17%	14%	13%	11%	10%	9%	9%	8%	8%	7%
CS Dividends	-	-	-	-	-	-	-	-	-	-	-	-	-
SNGP CS Dividends		-	-	-	-	-	-	-	-	-	-	-	-
SNGP CS Dividends		-	-	-	-	-	-	-	-	-	-	-	-
Plus: SNGP NGL Pipeline Marginal Profit	-	-	-	-	-	-	-	-	-	-	-	-	-
Less: SNGP Equity	-	7,350	21,230	9,558	-	-	-	-	-	-	-	-	-
SNGP Net Cash Flow	-	(7,350)	(21,230)	(9,558)	-	-	-	-	-	-	-	-	-
Real SNGP Net Cash Flow	-	(7,003)	(19,677)	(8,617)	-	-	-	-	-	-	-	-	-
SNGP Real Return on Equity	#ARITH												
PNG RETURNS													
PNG Share of Common Stock		17%	17%	17%	14%	13%	11%	10%	9%	9%	8%	8%	7%
CS Dividends	-	-	-	-	-	-	-	-	-	-	-	-	-
PNG CS Dividends		-	-	-	-	-	-	-	-	-	-	-	-
PNG CS Dividends		-	-	-	-	-	-	-	-	-	-	-	-
Plus: PNG Wet Gas Marginal Profit	-	-	-	-	-	-	-	-	-	-	-	-	-
Less: PNG Equity	-	7,350	21,230	9,558	-	-	-	-	-	-	-	-	-
PNG Net Cash Flow	-	(7,350)	(21,230)	(9,558)	-	-	-	-	-	-	-	-	-
Real PNG Net Cash Flow	-	(7,003)	(19,677)	(8,617)	-	-	-	-	-	-	-	-	-
PNG Real Return on Equity	(7.3%)												
GASPROM RETURNS													
Gasprom Share of Common Stock		17%	17%	17%	14%	13%	11%	10%	9%	9%	8%	8%	7%
CS Dividends	-	-	-	-	-	-	-	-	-	-	-	-	-
Gasprom CS Dividends		-	-	-	-	-	-	-	-	-	-	-	-
Gasprom CS Dividends		-	-	-	-	-	-	-	-	-	-	-	-
Plus: Gasprom Transport Marginal Profit	-	-	-	-	-	-	-	-	-	-	-	-	-
Less: Gasprom Equity	-	7,350	21,230	9,558	-	-	-	-	-	-	-	-	-
Gasprom Net Cash Flow	-	(7,350)	(21,230)	(9,558)	-	-	-	-	-	-	-	-	-
Real Gasprom Net Cash Flow	-	(7,003)	(19,677)	(8,617)	-	-	-	-	-	-	-	-	-
Gasprom Real Return on Equity	#ARITH												
FOREIGN INVESTOR RETURNS													
Foreign Share of Common Stock		50%	50%	50%	58%	62%	66%	70%	72%	74%	76%	77%	78%
CS Dividends	-	-	-	-	-	-	-	-	-	-	-	-	-
Foreign CS Dividends		-	-	-	-	-	-	-	-	-	-	-	-
Foreign CS Dividends		-	-	-	-	-	-	-	-	-	-	-	-
Less: Foreign Equity	-	22,050	63,690	28,673	-	-	-	-	-	-	-	-	-
Less: Additional Equity Investment	-	-	-	-	44,715	27,980	34,863	40,672	35,759	30,800	25,795	25,089	20,801
Foreign Net Cash Flow	-	(22,050)	(63,690)	(28,673)	(44,715)	(27,980)	(34,863)	(40,672)	(35,759)	(30,800)	(25,795)	(25,089)	(20,801)
Real Foreign Cash Flow	-	(21,010)	(59,032)	(25,852)	(39,218)	(23,872)	(28,934)	(32,457)	(27,439)	(22,725)	(18,300)	(17,114)	(13,644)
Foreign Real Return on Equity	#ARITH												

183

772

SIBERIAN GASS PROCESSING PLANT
Equity Returns
(Thousands)

	2007	2008	2009	2010	2011	2012	2013	2014	2015	Total
EQUITY INVESTMENT										
SNGP Equity	-	-	-	-	-	-	-	-	-	38,137
PNG Equity	-	-	-	-	-	-	-	-	-	38,137
Gasprom Equity	-	-	-	-	-	-	-	-	-	38,137
Foreign Equity	-	-	-	-	-	-	-	-	-	114,412
Additional Equity	-	-	-	-	-	-	-	-	-	286,474
Total Equity	-	-	-	-	-	-	-	-	-	515,299
CUMULATIVE EQUITY INVESTMENT										
SNGP Equity Holdings	38,137	38,137	38,137	38,137	38,137	38,137	38,137	38,137	38,137	
PNG Equity Holdings	38,137	38,137	38,137	38,137	38,137	38,137	38,137	38,137	38,137	
Gasprom Equity Holdings	38,137	38,137	38,137	38,137	38,137	38,137	38,137	38,137	38,137	
Foreign Equity Holdings	400,886	400,886	400,886	400,886	400,886	400,886	400,886	400,886	400,886	
CS Equity Position	515,299	515,299	515,299	515,299	515,299	515,299	515,299	515,299	515,299	
PROJECT RETURN ON EQUITY										
CS Dividends	30,107	31,311	32,563	28,743	28,474	29,613	30,797	32,029	39,392	283,028
Less: Equity Investment	-	-	-	-	-	-	-	-	-	515,299
Net Cash Flow	30,107	31,311	32,563	28,743	28,474	29,613	30,797	32,029	39,392	(232,271)
Cumulative	(485,192)	(453,882)	(421,318)	(392,575)	(364,102)	(334,489)	(303,692)	(271,663)	(232,271)	
Real Net Cash Flow	18,988	18,988	18,988	16,116	15,351	15,351	15,351	15,351	18,153	(282,856)
Real Return on Equity										

SIBERIAN GASS PROCESSING PLANT
Equity Returns

(Thousands)

	2007	2008	2009	2010	2011	2012	2013	2014	2015	Total
SNGP RETURNS										
SNGP Share of Common Stock	7%	7%	7%	7%	7%	7%	7%	7%	7%	
CS Dividends	30,107	31,311	32,563	28,743	28,474	29,613	30,797	32,029	39,392	283,028
SNGP CS Dividends	2,228	2,317	2,410	2,127	2,107	2,192	2,279	2,370	2,915	20,947
SNGP CS Dividends	2,228	2,317	2,410	2,127	2,107	2,192	2,279	2,370	2,915	20,947
Plus: SNGP NGL Pipeline Marginal Profit	-	-	-	-	-	-	-	-	-	-
Less: SNGP Equity	-	-	-	-	-	-	-	-	-	38,137
SNGP Net Cash Flow	2,228	2,317	2,410	2,127	2,107	2,192	2,279	2,370	2,915	(17,190)
Real SNGP Net Cash Flow	1,405	1,405	1,405	1,193	1,136	1,136	1,136	1,136	1,344	(24,001)
SNGP Real Return on Equity										
PNG RETURNS										
PNG Share of Common Stock	7%	7%	7%	7%	7%	7%	7%	7%	7%	
CS Dividends	30,107	31,311	32,563	28,743	28,474	29,613	30,797	32,029	39,392	283,028
PNG CS Dividends	2,228	2,317	2,410	2,127	2,107	2,192	2,279	2,370	2,915	20,947
PNG CS Dividends	2,228	2,317	2,410	2,127	2,107	2,192	2,279	2,370	2,915	20,947
Plus: PNG Wet Gas Marginal Profit	-	-	-	-	-	-	-	-	-	-
Less: PNG Equity	-	-	-	-	-	-	-	-	-	38,137
PNG Net Cash Flow	2,228	2,317	2,410	2,127	2,107	2,192	2,279	2,370	2,915	(17,190)
Real PNG Net Cash Flow	1,405	1,405	1,405	1,193	1,136	1,136	1,136	1,136	1,344	(24,001)
PNG Real Return on Equity										
GASPROM RETURNS										
Gasprom Share of Common Stock	7%	7%	7%	7%	7%	7%	7%	7%	7%	
CS Dividends	30,107	31,311	32,563	28,743	28,474	29,613	30,797	32,029	39,392	283,028
Gasprom CS Dividends	2,228	2,317	2,410	2,127	2,107	2,192	2,279	2,370	2,915	20,947
Gasprom CS Dividends	2,228	2,317	2,410	2,127	2,107	2,192	2,279	2,370	2,915	20,947
Plus: Gasprom Transport Marginal Profit	-	-	-	-	-	-	-	-	-	-
Less: Gasprom Equity	-	-	-	-	-	-	-	-	-	38,137
Gasprom Net Cash Flow	2,228	2,317	2,410	2,127	2,107	2,192	2,279	2,370	2,915	(17,190)
Real Gasprom Net Cash Flow	1,405	1,405	1,405	1,193	1,136	1,136	1,136	1,136	1,344	(24,001)
Gasprom Real Return on Equity										
FOREIGN INVESTOR RETURNS										
Foreign Share of Common Stock	78%	78%	78%	78%	78%	78%	78%	78%	78%	
CS Dividends	30,107	31,311	32,563	28,743	28,474	29,613	30,797	32,029	39,392	283,028
Foreign CS Dividends	23,422	24,359	25,333	22,361	22,152	23,038	23,959	24,918	30,646	220,187
Foreign CS Dividends	23,422	24,359	25,333	22,361	22,152	23,038	23,959	24,918	30,646	220,187
Less: Foreign Equity	-	-	-	-	-	-	-	-	-	114,412
Less: Additional Equity Investment	-	-	-	-	-	-	-	-	-	286,474
Foreign Net Cash Flow	23,422	24,359	25,333	22,361	22,152	23,038	23,959	24,918	30,646	(180,700)
Real Foreign Cash Flow	14,772	14,772	14,772	12,537	11,942	11,942	11,942	11,942	14,123	(210,852)
Foreign Real Return on Equity										

SIBERIAN GAS PROCESSING PLANT
Data and Key Results

TIMING DATA

Cost Estimate Month	Oct 93	First, Last Operation Month	Jan 96 Dec 15
Financial Closing Month	Jan 95	Economic Life	20.00

ENGINEERING DATA

	1994	1995	1996	1997	1998	1999	2000	2001
Rated Capacity (BCM/yr)in 1996, 1998	2.14	4.28						
Stream Factor		-	100%	100%	100%	100%	100%	100%
Operations Partial Year Factor	-	-	1.000	1.000	1.000	100%	100%	100%
Wet Gas Processed (MCM)	-	-	2.14	2.14	4.28	4.28	4.28	4.28
Dry Gas Production (BCM)	-	-	1.80	1.91	3.76	3.76	3.76	3.76
NGL Production (MMTons)	-	-	0.36	0.49	1.07	1.07	1.07	1.07

REVENUE DATA (1996 $'s)

NGL Domestic Price ($/Ton)	67.86	Domestic Gas Price ($/MCM)	17.09
NGL Export Price ($/Ton)	144.00	Export Gas Price ($/MCM)	90.00
% NGL for Export	100%	% Dry Gas for Export	100%

OPERATING COST DATA (1993 $000's)

Wet Gas Feedstock Cost ($/MCM)	-	
Chemicals Cost	382	
Utility Cost	19,432	
Maintenance Cost	985	
Labor Cost, Benefits	1,364	518
Other Expenses	10,134	

TRANSPORT COSTS (1996 $'s)

	DOM	EXP
Dry Gas In-Russia Costs ($/MCM)	-	30.00
Dry Gas Export Costs		24.00
NGL In-Russia Costs ($/Ton)	1.46	27.41
NGL Pipeline Costs	32.64	32.64
NGL Port Loading Charge		1.21
NGL Shipping Cost		11.33

CAPITAL COST DATA (1993 $000's)

	1995	1996	1997	Total
Gubkinsky GPP Expansion	43,700	157,500	90,300	291,500
Tarasovsky Gas Processing Plant	-	-	-	-
Gas Gathering Systems Cost	17,900	53,700	40,200	111,800
Metering Facilities Cost	440	1,290	970	2,700
Contributed Assets	9,837	13,220	(987)	22,070
Other Owners Costs	8,000	-	-	8,000
Infrastructure Costs	9,306	31,874	19,721	60,900
Initial Working Capital	2,839	-	-	2,839
Capital Costs	92,021	257,584	150,204	499,809

WORKING CAPITAL DATA

Days Receivables	45
Days Payables	45

FINANCING DATA

	WB/Other Loan	
% of Permanent Financing	70%	
Loan Amount, Commitment	404,937	404,940
Loan Interest Rate	8.15%	
Start of Repayment, Repayment Period	Jan 98	9.0
Commitment Fees %	0.25%	
Upfront Fee %	-	
Other Fin Fees & Close Costs (%, Amt)	-	

KEY RESULTS SUMMARY

Real Return on Investment (no taxes)	34.1%
Unleveraged Payback (Yrs)	2.0
Nominal NPV (Oct '93) @ 15.0%	525,407
Real Return on Equity	40.9%
Leveraged Payback (Yrs)	1.7
Nominal NPV (Oct '93) @ 15.0%	338,750
Min Debt Service Coverage	214%
Average Debt Service Coverage	286%

FINANCING DATA (cont'd)

	Actual
Required Reserves (1st Operating Yr)	37,849
Cash Flow Dedicated to Reserves	100%
Reinvestment Rate	3.0%

TAX DATA

Tax & Book In Service Month	Jan 96
Profits Tax	32.00%
15% Yr SL Property %	100.0%
Carryforward Years	5
VAT Tax (% of CapEx)	20.0%
Property Tax (% of Fixed Assets)	-
Road Tax (% of Revenues)	0.4%
Dry Gas Export Tariff ('93 $/MCM)	-
NGL Export Tariff ('93 $/Ton)	-

ECONOMIC DATA

Global Inflation Rate	2.8% **
Capital Cost Esc Rate	2.8%
O&M Esc Rate	2.8%
Export Gas Price Esc Rate	2.8%
Domestic Gas Price Esc Rate	2.8%
Export NGL Price Esc Rate	2.8%
Domestic NGL Price Esc Rate	2.8%

** Until 2000, 4% thereafter
(all escalation equivalent to inflation)

SENSITIVITY ANALYSIS FACTORS

O&M Cost	1.00
Gas Price	1.00
NGL Price	1.00
Capital Cost	1.00
Transport Cost	0.75
Wet Gas Price	1.00

SIBERIAN GAS PROCESSING PLANT
Annual Sources and Uses of Funds During Construction

($US Thousands)

	1995	1996	1997	Total	%
SOURCES OF FUNDS					
World Bank/Other Loan	68,856	201,288	134,794	404,937	70%
SIBNG Cash Equity	-	-	-	-	-
PNG Cash Equity	-	-	-	-	-
Gasprom Cash Equity	4,918	6,610	(493)	11,035	2%
SIBNG Equity	4,918	6,610	(493)	11,035	2%
PNG Equity	4,918	6,610	(493)	11,035	2%
Foreign Equity	14,755	19,830	(1,480)	33,105	6%
JV Operating Cash Flow	-	46,606	60,729	107,335	19%
Total Sources of Funds	98,365	287,554	192,562	578,482	100%
USES OF FUNDS					
Gubkinsky GPP Expansion	45,950	169,606	99,266	314,821	
Tarasovsky Gas Processing Plant	-	-	-	-	
Gas Gathering Systems Cost	18,820	57,765	44,281	120,866	
Metering Facilities Costs	463	1,388	1,068	2,919	
Infrastructure Costs	9,785	34,314	21,692	65,791	
Contributed Assets	9,837	13,220	(987)	22,070	
Other Owners Costs	8,281	-	-	8,281	
Initial Working Capital	3,000	-	-	3,000	
Capital Costs	96,134	276,292	165,321	537,747	93%
Other Loan Interest	1,259	10,586	27,085	38,929	
Other Loan Commitment Fees	972	677	156	1,805	
Upfront Fees	-	-	-	-	
Financing Costs	2,231	11,263	27,241	40,735	7%
Total Uses of Funds	98,365	287,554	192,562	578,482	100%

	$	%
Total Debt	404,937	70%
Operating Cash	107,335	19%
Equity Requirement	66,209	11%
	578,482	100%

MEMORANDA	WB/Other Loan	
Loan Draws, Amount	404,937	
Standby Facility	-	
Constr Loan Draws + Standby, Commitment	404,937	404,940
Constr Loan Int Rate	8.15%	
Commitment Fee Rate	0.25%	
Upfront Fee Rate	-	
Other Financing Fees (%, Amt)	-	
Repayment Period	9.0	

** NOTE: ANNUAL SANDU STATEMENT IS FOR PRESENTATION ONLY. VALUES ARE FROM QUARTERLY CALCULATIONS.

VAT TAX FUNDING				
VAT Tax	15,003	52,614	33,262	100,879
VAT Recovery Expressed in $'s	435	8,945	30,692	40,072
Net VAT Payment	14,569	43,669	2,570	60,807
PNG Cash Equity for VAT	2,428	7,278	428	10,135
SNGP Cash Equity for VAT	2,428	7,278	428	10,135
Gasprom Cash Equity for VAT	2,428	7,278	428	10,135
Foreign Equity for VAT	7,284	21,834	1,285	30,404
Cash Equity for VAT	14,569	43,669	2,570	60,807

Equity Requirement	66,209
Equity for VAT	60,807
Total Equity	127,017

1776

187

SIBERIAN GASS PROCESSING PLANT
Equity Returns

(Thousands)

	1994	1995	1996	1997	1998	1999	2000	2001	2002	2003	2004	2005	2006
EQUITY INVESTMENT													
SNGP Equity	-	7,346	13,888	(65)	-	-	-	-	-	-	-	-	-
PNG Equity	-	7,346	13,888	(65)	-	-	-	-	-	-	-	-	-
Gasprom Equity	-	7,346	13,888	(65)	-	-	-	-	-	-	-	-	-
Foreign Equity	-	22,039	41,665	(195)	-	-	-	-	-	-	-	-	-
Additional Equity	-	-	-	-	-	-	-	-	-	-	-	-	-
Total Equity	-	44,078	83,329	(391)	-	-	-	-	-	-	-	-	-
CUMULATIVE EQUITY INVESTMENT													
SNGP Equity Holdings	-	7,346	21,235	21,169	21,169	21,169	21,169	21,169	21,169	21,169	21,169	21,169	21,169
PNG Equity Holdings	-	7,346	21,235	21,169	21,169	21,169	21,169	21,169	21,169	21,169	21,169	21,169	21,169
Gasprom Equity Holdings	-	7,346	21,235	21,169	21,169	21,169	21,169	21,169	21,169	21,169	21,169	21,169	21,169
Foreign Equity Holdings	-	22,039	63,704	63,508	63,508	63,508	63,508	63,508	63,508	63,508	63,508	63,508	63,508
CS Equity Position	-	44,078	127,407	127,017	127,017	127,017	127,017	127,017	127,017	127,017	127,017	127,017	127,017
PROJECT RETURN ON EQUITY													
CS Dividends	-	-	-	-	48,555	118,490	111,235	107,959	114,313	119,396	119,969	113,060	143,661
Less: Equity Investment	-	44,078	83,329	(391)	-	-	-	-	-	-	-	-	-
Net Cash Flow	-	(44,078)	(83,329)	391	48,555	118,490	111,235	107,959	114,313	119,396	119,969	113,060	143,661
Cumulative	-	(44,078)	(127,407)	(127,017)	(78,461)	40,029	151,264	259,223	373,536	492,932	612,901	725,961	869,622
Real Net Cash Flow	-	(41,999)	(77,235)	352	42,586	101,093	92,318	86,153	87,716	88,092	85,110	77,124	94,229
Real Return on Equity	40.9%												

SIBERIAN GASS PROCESSING PLANT
Equity Returns

(Thousands)

	1994	1995	1996	1997	1998	1999	2000	2001	2002	2003	2004	2005	2006
SNGP RETURNS													
SNGP Share of Common Stock		17%	17%	17%	17%	17%	17%	17%	17%	17%	17%	17%	17%
CS Dividends	-	-	-	-	48,555	118,490	111,235	107,959	114,313	119,396	119,969	113,060	143,661
SNGP CS Dividends		-	-	-	8,093	19,748	18,539	17,993	19,052	19,899	19,995	18,843	23,943
SNGP CS Dividends		-	-	-	8,093	19,748	18,539	17,993	19,052	19,899	19,995	18,843	23,943
Plus: SNGP NGL Pipeline Marginal Profit	-	-	-	-	-	-	-	-	-	-	-	-	-
Less: SNGP Equity	-	7,346	13,888	(65)	-	-	-	-	-	-	-	-	-
SNGP Net Cash Flow	-	(7,346)	(13,888)	65	8,093	19,748	18,539	17,993	19,052	19,899	19,995	18,843	23,943
Real SNGP Net Cash Flow	-	(7,000)	(12,873)	59	7,098	16,849	15,386	14,359	14,619	14,682	14,185	12,854	15,705
SNGP Real Return on Equity	40.9%												
PNG RETURNS													
PNG Share of Common Stock		17%	17%	17%	17%	17%	17%	17%	17%	17%	17%	17%	17%
CS Dividends	-	-	-	-	48,555	118,490	111,235	107,959	114,313	119,396	119,969	113,060	143,661
PNG CS Dividends		-	-	-	8,093	19,748	18,539	17,993	19,052	19,899	19,995	18,843	23,943
PNG CS Dividends		-	-	-	8,093	19,748	18,539	17,993	19,052	19,899	19,995	18,843	23,943
Plus: PNG Wet Gas Marginal Profit	-	-	-	-	-	-	-	-	-	-	-	-	-
Less: PNG Equity	-	7,346	13,888	(65)	-	-	-	-	-	-	-	-	-
PNG Net Cash Flow	-	(7,346)	(13,888)	65	8,093	19,748	18,539	17,993	19,052	19,899	19,995	18,843	23,943
Real PNG Net Cash Flow	-	(7,000)	(12,873)	59	7,098	16,849	15,386	14,359	14,619	14,682	14,185	12,854	15,705
PNG Real Return on Equity	40.9%												
GASPROM RETURNS													
Gasprom Share of Common Stock		17%	17%	17%	17%	17%	17%	17%	17%	17%	17%	17%	17%
CS Dividends	-	-	-	-	48,555	118,490	111,235	107,959	114,313	119,396	119,969	113,060	143,661
Gasprom CS Dividends		-	-	-	8,093	19,748	18,539	17,993	19,052	19,899	19,995	18,843	23,943
Gasprom CS Dividends		-	-	-	8,093	19,748	18,539	17,993	19,052	19,899	19,995	18,843	23,943
Plus: Gasprom Transport Marginal Profit	-	-	-	-	-	-	-	-	-	-	-	-	-
Less: Gasprom Equity	-	7,346	13,888	(65)	-	-	-	-	-	-	-	-	-
Gasprom Net Cash Flow	-	(7,346)	(13,888)	65	8,093	19,748	18,539	17,993	19,052	19,899	19,995	18,843	23,943
Real Gasprom Net Cash Flow	-	(7,000)	(12,873)	59	7,098	16,849	15,386	14,359	14,619	14,682	14,185	12,854	15,705
Gasprom Real Return on Equity	40.9%												
FOREIGN INVESTOR RETURNS													
Foreign Share of Common Stock		50%	50%	50%	50%	50%	50%	50%	50%	50%	50%	50%	50%
CS Dividends	-	-	-	-	48,555	118,490	111,235	107,959	114,313	119,396	119,969	113,060	143,661
Foreign CS Dividends		-	-	-	24,278	59,245	55,618	53,980	57,157	59,698	59,984	56,530	71,830
Foreign CS Dividends		-	-	-	24,278	59,245	55,618	53,980	57,157	59,698	59,984	56,530	71,830
Less: Foreign Equity	-	22,039	41,665	(195)	-	-	-	-	-	-	-	-	-
Less: Additional Equity Investment	-	-	-	-	-	-	-	-	-	-	-	-	-
Foreign Net Cash Flow	-	(22,039)	(41,665)	195	24,278	59,245	55,618	53,980	57,157	59,698	59,984	56,530	71,830
Real Foreign Cash Flow	-	(20,999)	(38,618)	176	21,293	50,547	46,159	43,077	43,858	44,046	42,555	38,562	47,115
Foreign Real Return on Equity	40.9%												

1178

SIBERIAN GASS PROCESSING PLANT
Equity Returns
(Thousands)

	2007	2008	2009	2010	2011	2012	2013	2014	2015	Total
EQUITY INVESTMENT										
SNGP Equity	-	-	-	-	-	-	-	-	-	21,169
PNG Equity	-	-	-	-	-	-	-	-	-	21,169
Gasprom Equity	-	-	-	-	-	-	-	-	-	21,169
Foreign Equity	-	-	-	-	-	-	-	-	-	63,508
Additional Equity	-	-	-	-	-	-	-	-	-	-
Total Equity	-	-	-	-	-	-	-	-	-	127,017
CUMULATIVE EQUITY INVESTMENT										
SNGP Equity Holdings	21,169	21,169	21,169	21,169	21,169	21,169	21,169	21,169	21,169	
PNG Equity Holdings	21,169	21,169	21,169	21,169	21,169	21,169	21,169	21,169	21,169	
Gasprom Equity Holdings	21,169	21,169	21,169	21,169	21,169	21,169	21,169	21,169	21,169	
Foreign Equity Holdings	63,508	63,508	63,508	63,508	63,508	63,508	63,508	63,508	63,508	
CS Equity Position	127,017	127,017	127,017	127,017	127,017	127,017	127,017	127,017	127,017	
PROJECT RETURN ON EQUITY										
CS Dividends	172,719	179,628	186,813	194,286	202,057	210,139	218,545	227,287	279,536	2,867,648
Less: Equity Investment	-	-	-	-	-	-	-	-	-	127,017
Net Cash Flow	172,719	179,628	186,813	194,286	202,057	210,139	218,545	227,287	279,536	2,740,632
Cumulative	1,042,341	1,221,969	1,408,782	1,603,068	1,805,125	2,015,264	2,233,809	2,461,096	2,740,632	
Real Net Cash Flow	108,932	108,932	108,932	108,932	108,932	108,932	108,932	108,932	128,820	1,635,813
Real Return on Equity										

190

SIBERIAN GASS PROCESSING PLANT
Equity Returns

(Thousands)

	2007	2008	2009	2010	2011	2012	2013	2014	2015	Total
SNGP RETURNS										
SNGP Share of Common Stock	17%	17%	17%	17%	17%	17%	17%	17%	17%	
CS Dividends	172,719	179,628	186,813	194,286	202,057	210,139	218,545	227,287	279,536	2,867,648
SNGP CS Dividends	28,787	29,938	31,136	32,381	33,676	35,023	36,424	37,881	46,589	477,941
SNGP CS Dividends	28,787	29,938	31,136	32,381	33,676	35,023	36,424	37,881	46,589	477,941
Plus: SNGP NGL Pipeline Marginal Profit	-	-	-	-	-	-	-	-	-	-
Less: SNGP Equity	-	-	-	-	-	-	-	-	-	21,169
SNGP Net Cash Flow	28,787	29,938	31,136	32,381	33,676	35,023	36,424	37,881	46,589	456,772
Real SNGP Net Cash Flow	18,155	18,155	18,155	18,155	18,155	18,155	18,155	18,155	21,470	272,635
SNGP Real Return on Equity										
PNG RETURNS										
PNG Share of Common Stock	17%	17%	17%	17%	17%	17%	17%	17%	17%	
CS Dividends	172,719	179,628	186,813	194,286	202,057	210,139	218,545	227,287	279,536	2,867,648
PNG CS Dividends	28,787	29,938	31,136	32,381	33,676	35,023	36,424	37,881	46,589	477,941
PNG CS Dividends	28,787	29,938	31,136	32,381	33,676	35,023	36,424	37,881	46,589	477,941
Plus: PNG Wet Gas Marginal Profit	-	-	-	-	-	-	-	-	-	-
Less: PNG Equity	-	-	-	-	-	-	-	-	-	21,169
PNG Net Cash Flow	28,787	29,938	31,136	32,381	33,676	35,023	36,424	37,881	46,589	456,772
Real PNG Net Cash Flow	18,155	18,155	18,155	18,155	18,155	18,155	18,155	18,155	21,470	272,635
PNG Real Return on Equity										
GASPROM RETURNS										
Gasprom Share of Common Stock	17%	17%	17%	17%	17%	17%	17%	17%	17%	
CS Dividends	172,719	179,628	186,813	194,286	202,057	210,139	218,545	227,287	279,536	2,867,648
Gasprom CS Dividends	28,787	29,938	31,136	32,381	33,676	35,023	36,424	37,881	46,589	477,941
Gasprom CS Dividends	28,787	29,938	31,136	32,381	33,676	35,023	36,424	37,881	46,589	477,941
Plus: Gasprom Transport Marginal Profit	-	-	-	-	-	-	-	-	-	-
Less: Gasprom Equity	-	-	-	-	-	-	-	-	-	21,169
Gasprom Net Cash Flow	28,787	29,938	31,136	32,381	33,676	35,023	36,424	37,881	46,589	456,772
Real Gasprom Net Cash Flow	18,155	18,155	18,155	18,155	18,155	18,155	18,155	18,155	21,470	272,635
Gasprom Real Return on Equity										
FOREIGN INVESTOR RETURNS										
Foreign Share of Common Stock	50%	50%	50%	50%	50%	50%	50%	50%	50%	
CS Dividends	172,719	179,628	186,813	194,286	202,057	210,139	218,545	227,287	279,536	2,867,648
Foreign CS Dividends	86,360	89,814	93,407	97,143	101,029	105,070	109,272	113,643	139,768	1,433,824
Foreign CS Dividends	86,360	89,814	93,407	97,143	101,029	105,070	109,272	113,643	139,768	1,433,824
Less: Foreign Equity	-	-	-	-	-	-	-	-	-	63,508
Less: Additional Equity Investment	-	-	-	-	-	-	-	-	-	-
Foreign Net Cash Flow	86,360	89,814	93,407	97,143	101,029	105,070	109,272	113,643	139,768	1,370,316
Real Foreign Cash Flow	54,466	54,466	54,466	54,466	54,466	54,466	54,466	54,466	64,410	817,906
Foreign Real Return on Equity										

191

1740

SIBERIAN GAS PROCESSING PLANT
Data and Key Results

TIMING DATA

Cost Estimate Month	Oct 93	First, Last Operation Month	Jan 96 Dec 15
Financial Closing Month	Jan 95	Economic Life	20.00

ENGINEERING DATA

	1994	1995	1996	1997	1998	1999	2000	2001
Rated Capacity (BCM/yr)in 1996, 1998	2.14	4.28						
Stream Factor		-	100%	100%	100%	100%	100%	100%
Operations Partial Year Factor	-	-	1.000	1.000	1.000	100%	100%	100%
Wet Gas Processed (MCM)	-	-	2.14	2.14	4.28	4.28	4.28	4.28
Dry Gas Production (BCM)	-	-	1.80	1.91	3.76	3.76	3.76	3.76
NGL Production (MMTons)	-	-	0.36	0.49	1.07	1.07	1.07	1.07

REVENUE DATA (1996 $'s)

NGL Domestic Price ($/Ton)	67.86	Domestic Gas Price ($/MCM)	17.09
NGL Export Price ($/Ton)	144.00	Export Gas Price ($/MCM)	90.00
% NGL for Export	100%	% Dry Gas for Export	100%

OPERATING COST DATA (1993 $000's)

			TRANSPORT COSTS (1996 $'s)	DOM	EXP
Wet Gas Feedstock Cost ($/MCM)	-		Dry Gas In-Russia Costs ($/MCM)	-	10.00
Chemicals Cost	382		Dry Gas Export Costs		32.00
Utility Cost	19,432		NGL In-Russia Costs ($/Ton)	1.94	36.55
Maintenance Cost	985		NGL Pipeline Costs	43.52	43.52
Labor Cost, Benefits	1,364	518	NGL Port Loading Charge		1.62
Other Expenses	10,134		NGL Shipping Cost		15.10

CAPITAL COST DATA (1993 $000's)

	1995	1996	1997	Total
Gubkinsky GPP Expansion	43,700	157,500	90,300	291,500
Tarasovsky Gas Processing Plant	-	-	-	-
Gas Gathering Systems Cost	17,900	53,700	40,200	111,800
Metering Facilities Cost	440	1,290	970	2,700
Contributed Assets	9,835	10,525	(3,964)	16,397
Other Owners Costs	8,000	-	-	8,000
Infrastructure Costs	9,306	31,874	19,721	60,900
Initial Working Capital	2,839	-	-	2,839
Capital Costs	92,020	254,889	147,227	494,136

WORKING CAPITAL DATA

Days Receivables	45
Days Payables	45

FINANCING DATA

	WB/Other Loan	
% of Permanent Financing	70%	
Loan Amount, Commitment	400,757	400,760
Loan Interest Rate	8.15%	
Start of Repayment, Repayment Period	Jan 98	9.0
Commitment Fees %	0.25%	
Upfront Fee %	-	
Other Fin Fees & Close Costs (%, Amt)	-	

KEY RESULTS SUMMARY

Real Return on Investment (no taxes)	38.5%
Unleveraged Payback (Yrs)	1.7
Nominal NPV (Oct '93) @ 15.0%	622,579
Real Return on Equity	47.8%
Leveraged Payback (Yrs)	1.4
Nominal NPV (Oct '93) @ 15.0%	406,426
Min Debt Service Coverage	233%
Average Debt Service Coverage	316%

FINANCING DATA (cont'd)

	Actual
Required Reserves (1st Operating Yr)	37,458
Cash Flow Dedicated to Reserves	100%
Reinvestment Rate	3.0%

TAX DATA

Tax & Book In Service Month	Jan 96
Profits Tax	32.00%
15% Yr SL Property %	100.0%
Carryforward Years	5
VAT Tax (% of CapEx)	20.0%
Property Tax (% of Fixed Assets)	-
Road Tax (% of Revenues)	0.4%
Dry Gas Export Tariff ('93 $/MCM)	-
NGL Export Tariff ('93 $/Ton)	-

ECONOMIC DATA

Global Inflation Rate	2.8% **
Capital Cost Esc Rate	2.8%
O&M Esc Rate	2.8%
Export Gas Price Esc Rate	2.8%
Domestic Gas Price Esc Rate	2.8%
Export NGL Price Esc Rate	2.8%
Domestic NGL Price Esc Rate	2.8%

** Until 2000, 4% thereafter
(all escalation equivalent to inflation)

SENSITIVITY ANALYSIS FACTORS

O&M Cost	1.00
Gas Price	1.00
NGL Price	1.00
Capital Cost	1.00
Transport Cost	1.00
Wet Gas Price	1.00

SIBERIAN GAS PROCESSING PLANT
Annual Sources and Uses of Funds During Construction

($US Thousands)

	1995	1996	1997	Total	%
SOURCES OF FUNDS					
World Bank/Other Loan	68,847	199,355	132,554	400,757	70%
SIBNG Cash Equity	-	-	-	-	-
PNG Cash Equity	-	-	-	-	-
Gasprom Cash Equity	4,918	5,263	(1,982)	8,198	1%
SIBNG Equity	4,918	5,263	(1,982)	8,198	1%
PNG Equity	4,918	5,263	(1,982)	8,198	1%
Foreign Equity	14,753	15,788	(5,945)	24,595	4%
JV Operating Cash Flow	-	53,863	68,699	122,562	21%
Total Sources of Funds	98,353	284,793	189,363	572,510	100%
USES OF FUNDS					
Gubkinsky GPP Expansion	45,950	169,606	99,266	314,821	
Tarasovsky Gas Processing Plant	-	-	-	-	
Gas Gathering Systems Cost	18,820	57,765	44,281	120,866	
Metering Facilities Costs	463	1,388	1,068	2,919	
Infrastructure Costs	9,785	34,314	21,692	65,791	
Contributed Assets	9,835	10,525	(3,964)	16,397	
Other Owners Costs	8,281	-	-	8,281	
Initial Working Capital	3,000	-	-	3,000	
Capital Costs	96,133	273,597	162,344	532,074	93%
Other Loan Interest	1,259	10,528	26,866	38,653	
Other Loan Commitment Fees	961	669	153	1,783	
Upfront Fees	-	-	-	-	
Financing Costs	2,220	11,197	27,018	40,435	7%
Total Uses of Funds	98,353	284,793	189,363	572,510	100%

	$	%
Total Debt	400,757	70%
Operating Cash	122,562	21%
Equity Requirement	49,191	9%
	572,510	100%

MEMORANDA	WB/Other Loan	
Loan Draws, Amount	400,757	
Standby Facility	-	
Constr Loan Draws + Standby, Commitment	400,757	400,760
Constr Loan Int Rate	8.15%	
Commitment Fee Rate	0.25%	
Upfront Fee Rate	-	
Other Financing Fees (%, Amt)	-	
Repayment Period	9.0	

** NOTE: ANNUAL SANDU STATEMENT IS FOR PRESENTATION ONLY. VALUES ARE FROM QUARTERLY CALCULATIONS.

VAT TAX FUNDING				
VAT Tax	15,003	52,614	33,262	100,879
VAT Recovery Expressed in $'s	435	8,945	30,692	40,072
Net VAT Payment	14,569	43,669	2,570	60,807
PNG Cash Equity for VAT	2,428	7,278	428	10,135
SNGP Cash Equity for VAT	2,428	7,278	428	10,135
Gasprom Cash Equity for VAT	2,428	7,278	428	10,135
Foreign Equity for VAT	7,284	21,834	1,285	30,404
Cash Equity for VAT	14,569	43,669	2,570	60,807

Equity Requirement	49,191
Equity for VAT	60,807
Total Equity	109,998

1782
193

178

SIBERIAN GAS PROCESSING PLANT
Equity Returns

(Thousands)

	1994	1995	1996	1997	1998	1999	2000	2001	2002	2003	2004	2005	2006
EQUITY INVESTMENT													
SNGP Equity	-	7,346	12,541	(1,553)	-	-	-	-	-	-	-	-	-
PNG Equity	-	7,346	12,541	(1,553)	-	-	-	-	-	-	-	-	-
Gasprom Equity	-	7,346	12,541	(1,553)	-	-	-	-	-	-	-	-	-
Foreign Equity	-	22,037	37,622	(4,660)	-	-	-	-	-	-	-	-	-
Additional Equity	-	-	-	-	-	-	-	-	-	-	-	-	-
Total Equity	-	44,075	75,244	(9,321)	-	-	-	-	-	-	-	-	-
CUMULATIVE EQUITY INVESTMENT													
SNGP Equity Holdings	-	7,346	19,886	18,333	18,333	18,333	18,333	18,333	18,333	18,333	18,333	18,333	18,333
PNG Equity Holdings	-	7,346	19,886	18,333	18,333	18,333	18,333	18,333	18,333	18,333	18,333	18,333	18,333
Gasprom Equity Holdings	-	7,346	19,886	18,333	18,333	18,333	18,333	18,333	18,333	18,333	18,333	18,333	18,333
Foreign Equity Holdings	-	22,037	59,659	54,999	54,999	54,999	54,999	54,999	54,999	54,999	54,999	54,999	54,999
CS Equity Position	-	44,075	119,319	109,998	109,998	109,998	109,998	109,998	109,998	109,998	109,998	109,998	109,998
PROJECT RETURN ON EQUITY													
CS Dividends	-	-	-	-	62,126	133,029	126,166	123,419	130,356	136,045	137,344	131,285	162,345
Less: Equity Investment	-	44,075	75,244	(9,321)	-	-	-	-	-	-	-	-	-
Net Cash Flow	-	(44,075)	(75,244)	9,321	62,126	133,029	126,166	123,419	130,356	136,045	137,344	131,285	162,345
Cumulative	-	(44,075)	(119,319)	(109,998)	(47,872)	85,157	211,324	334,743	465,099	601,143	738,488	869,772	1,032,118
Real Net Cash Flow	-	(41,995)	(69,741)	8,404	54,489	113,498	104,711	98,491	100,025	100,376	97,437	89,556	106,484
Real Return on Equity	47.8%												

SIBERIAN GAS PROCESSING PLANT
Equity Returns

(Thousands)

	1994	1995	1996	1997	1998	1999	2000	2001	2002	2003	2004	2005	2006
SNGP RETURNS													
SNGP Share of Common Stock		17%	17%	17%	17%	17%	17%	17%	17%	17%	17%	17%	17%
CS Dividends	-	-	-	-	62,126	133,029	126,166	123,419	130,356	136,045	137,344	131,285	162,345
SNGP CS Dividends		-	-	-	10,354	22,172	21,028	20,570	21,726	22,674	22,891	21,881	27,058
SNGP CS Dividends		-	-	-	10,354	22,172	21,028	20,570	21,726	22,674	22,891	21,881	27,058
Plus: SNGP NGL Pipeline Marginal Profit	-	-	-	-	-	-	-	-	-	-	-	-	-
Less: SNGP Equity	-	7,346	12,541	(1,553)	-	-	-	-	-	-	-	-	-
SNGP Net Cash Flow	-	(7,346)	(12,541)	1,553	10,354	22,172	21,028	20,570	21,726	22,674	22,891	21,881	27,058
Real SNGP Net Cash Flow	-	(6,999)	(11,624)	1,401	9,081	18,916	17,452	16,415	16,671	16,729	16,240	14,926	17,747
SNGP Real Return on Equity	47.8%												
PNG RETURNS													
PNG Share of Common Stock		17%	17%	17%	17%	17%	17%	17%	17%	17%	17%	17%	17%
CS Dividends	-	-	-	-	62,126	133,029	126,166	123,419	130,356	136,045	137,344	131,285	162,345
PNG CS Dividends		-	-	-	10,354	22,172	21,028	20,570	21,726	22,674	22,891	21,881	27,058
PNG CS Dividends		-	-	-	10,354	22,172	21,028	20,570	21,726	22,674	22,891	21,881	27,058
Plus: PNG Wet Gas Marginal Profit	-	-	-	-	-	-	-	-	-	-	-	-	-
Less: PNG Equity	-	7,346	12,541	(1,553)	-	-	-	-	-	-	-	-	-
PNG Net Cash Flow	-	(7,346)	(12,541)	1,553	10,354	22,172	21,028	20,570	21,726	22,674	22,891	21,881	27,058
Real PNG Net Cash Flow	-	(6,999)	(11,624)	1,401	9,081	18,916	17,452	16,415	16,671	16,729	16,240	14,926	17,747
PNG Real Return on Equity	47.8%												
GASPROM RETURNS													
Gasprom Share of Common Stock		17%	17%	17%	17%	17%	17%	17%	17%	17%	17%	17%	17%
CS Dividends	-	-	-	-	62,126	133,029	126,166	123,419	130,356	136,045	137,344	131,285	162,345
Gasprom CS Dividends		-	-	-	10,354	22,172	21,028	20,570	21,726	22,674	22,891	21,881	27,058
Gasprom CS Dividends		-	-	-	10,354	22,172	21,028	20,570	21,726	22,674	22,891	21,881	27,058
Plus: Gasprom Transport Marginal Profit	-	-	-	-	-	-	-	-	-	-	-	-	-
Less: Gasprom Equity	-	7,346	12,541	(1,553)	-	-	-	-	-	-	-	-	-
Gasprom Net Cash Flow	-	(7,346)	(12,541)	1,553	10,354	22,172	21,028	20,570	21,726	22,674	22,891	21,881	27,058
Real Gasprom Net Cash Flow	-	(6,999)	(11,624)	1,401	9,081	18,916	17,452	16,415	16,671	16,729	16,240	14,926	17,747
Gasprom Real Return on Equity	47.8%												
FOREIGN INVESTOR RETURNS													
Foreign Share of Common Stock		50%	50%	50%	50%	50%	50%	50%	50%	50%	50%	50%	50%
CS Dividends	-	-	-	-	62,126	133,029	126,166	123,419	130,356	136,045	137,344	131,285	162,345
Foreign CS Dividends		-	-	-	31,063	66,515	63,083	61,710	65,178	68,022	68,672	65,642	81,173
Foreign CS Dividends		-	-	-	31,063	66,515	63,083	61,710	65,178	68,022	68,672	65,642	81,173
Less: Foreign Equity	-	22,037	37,622	(4,660)	-	-	-	-	-	-	-	-	-
Less: Additional Equity Investment	-	-	-	-	-	-	-	-	-	-	-	-	-
Foreign Net Cash Flow	-	(22,037)	(37,622)	4,660	31,063	66,515	63,083	61,710	65,178	68,022	68,672	65,642	81,173
Real Foreign Cash Flow	-	(20,998)	(34,871)	4,202	27,244	56,749	52,355	49,245	50,013	50,188	48,719	44,778	53,242
Foreign Real Return on Equity	47.8%												

SIBERIAN GAS PROCESSING PLANT
Equity Returns
(Thousands)

	2007	2008	2009	2010	2011	2012	2013	2014	2015	Total
EQUITY INVESTMENT										
SNGP Equity	-	-	-	-	-	-	-	-	-	18,333
PNG Equity	-	-	-	-	-	-	-	-	-	18,333
Gasprom Equity	-	-	-	-	-	-	-	-	-	18,333
Foreign Equity	-	-	-	-	-	-	-	-	-	54,999
Additional Equity	-	-	-	-	-	-	-	-	-	-
Total Equity	-	-	-	-	-	-	-	-	-	109,998
CUMULATIVE EQUITY INVESTMENT										
SNGP Equity Holdings	18,333	18,333	18,333	18,333	18,333	18,333	18,333	18,333	18,333	
PNG Equity Holdings	18,333	18,333	18,333	18,333	18,333	18,333	18,333	18,333	18,333	
Gasprom Equity Holdings	18,333	18,333	18,333	18,333	18,333	18,333	18,333	18,333	18,333	
Foreign Equity Holdings	54,999	54,999	54,999	54,999	54,999	54,999	54,999	54,999	54,999	
CS Equity Position	109,998	109,998	109,998	109,998	109,998	109,998	109,998	109,998	109,998	
PROJECT RETURN ON EQUITY										
CS Dividends	191,910	199,587	207,570	215,873	224,508	233,488	242,828	252,541	310,596	3,221,017
Less: Equity Investment	-	-	-	-	-	-	-	-	-	109,998
Net Cash Flow	191,910	199,587	207,570	215,873	224,508	233,488	242,828	252,541	310,596	3,111,019
Cumulative	1,224,028	1,423,615	1,631,185	1,847,058	2,071,566	2,305,055	2,547,883	2,800,424	3,111,019	
Real Net Cash Flow	121,035	121,035	121,035	121,035	121,035	121,035	121,035	121,035	143,134	1,873,148
Real Return on Equity										

SIBERIAN GAS PROCESSING PLANT
Equity Returns

(Thousands)

	2007	2008	2009	2010	2011	2012	2013	2014	2015	Total
SNGP RETURNS										
SNGP Share of Common Stock	17%	17%	17%	17%	17%	17%	17%	17%	17%	
CS Dividends	191,910	199,587	207,570	215,873	224,508	233,488	242,828	252,541	310,596	3,221,017
SNGP CS Dividends	31,985	33,264	34,595	35,979	37,418	38,915	40,471	42,090	51,766	536,836
SNGP CS Dividends	31,985	33,264	34,595	35,979	37,418	38,915	40,471	42,090	51,766	536,836
Plus: SNGP NGL Pipeline Marginal Profit	-	-	-	-	-	-	-	-	-	-
Less: SNGP Equity	-	-	-	-	-	-	-	-	-	18,333
SNGP Net Cash Flow	31,985	33,264	34,595	35,979	37,418	38,915	40,471	42,090	51,766	518,503
Real SNGP Net Cash Flow	20,173	20,173	20,173	20,173	20,173	20,173	20,173	20,173	23,856	312,191
SNGP Real Return on Equity										
PNG RETURNS										
PNG Share of Common Stock	17%	17%	17%	17%	17%	17%	17%	17%	17%	
CS Dividends	191,910	199,587	207,570	215,873	224,508	233,488	242,828	252,541	310,596	3,221,017
PNG CS Dividends	31,985	33,264	34,595	35,979	37,418	38,915	40,471	42,090	51,766	536,836
PNG CS Dividends	31,985	33,264	34,595	35,979	37,418	38,915	40,471	42,090	51,766	536,836
Plus: PNG Wet Gas Marginal Profit	-	-	-	-	-	-	-	-	-	-
Less: PNG Equity	-	-	-	-	-	-	-	-	-	18,333
PNG Net Cash Flow	31,985	33,264	34,595	35,979	37,418	38,915	40,471	42,090	51,766	518,503
Real PNG Net Cash Flow	20,173	20,173	20,173	20,173	20,173	20,173	20,173	20,173	23,856	312,191
PNG Real Return on Equity										
GASPROM RETURNS										
Gasprom Share of Common Stock	17%	17%	17%	17%	17%	17%	17%	17%	17%	
CS Dividends	191,910	199,587	207,570	215,873	224,508	233,488	242,828	252,541	310,596	3,221,017
Gasprom CS Dividends	31,985	33,264	34,595	35,979	37,418	38,915	40,471	42,090	51,766	536,836
Gasprom CS Dividends	31,985	33,264	34,595	35,979	37,418	38,915	40,471	42,090	51,766	536,836
Plus: Gasprom Transport Marginal Profit	-	-	-	-	-	-	-	-	-	-
Less: Gasprom Equity	-	-	-	-	-	-	-	-	-	18,333
Gasprom Net Cash Flow	31,985	33,264	34,595	35,979	37,418	38,915	40,471	42,090	51,766	518,503
Real Gasprom Net Cash Flow	20,173	20,173	20,173	20,173	20,173	20,173	20,173	20,173	23,856	312,191
Gasprom Real Return on Equity										
FOREIGN INVESTOR RETURNS										
Foreign Share of Common Stock	50%	50%	50%	50%	50%	50%	50%	50%	50%	
CS Dividends	191,910	199,587	207,570	215,873	224,508	233,488	242,828	252,541	310,596	3,221,017
Foreign CS Dividends	95,955	99,793	103,785	107,937	112,254	116,744	121,414	126,270	155,298	1,610,509
Foreign CS Dividends	95,955	99,793	103,785	107,937	112,254	116,744	121,414	126,270	155,298	1,610,509
Less: Foreign Equity	-	-	-	-	-	-	-	-	-	54,999
Less: Additional Equity Investment	-	-	-	-	-	-	-	-	-	-
Foreign Net Cash Flow	95,955	99,793	103,785	107,937	112,254	116,744	121,414	126,270	155,298	1,555,510
Real Foreign Cash Flow	60,518	60,518	60,518	60,518	60,518	60,518	60,518	60,518	71,567	936,574
Foreign Real Return on Equity										

197

SIBERIAN GAS PROCESSING PLANT
Data and Key Results

TIMING DATA

Cost Estimate Month	Oct 93	First, Last Operation Month	Jan 96 Dec 15
Financial Closing Month	Jan 95	Economic Life	20.00

ENGINEERING DATA

	1994	1995	1996	1997	1998	1999	2000	2001
Rated Capacity (BCM/yr)in 1996, 1998	2.14	4.28						
Stream Factor		-	100%	100%	100%	100%	100%	100%
Operations Partial Year Factor	-	-	1.000	1.000	1.000	100%	100%	100%
Wet Gas Processed (MCM)	-	-	2.14	2.14	4.28	4.28	4.28	4.28
Dry Gas Production (BCM)	-	-	1.80	1.91	3.76	3.76	3.76	3.76
NGL Production (MMTons)	-	-	0.36	0.49	1.07	1.07	1.07	1.07

REVENUE DATA (1996 $'s)

NGL Domestic Price ($/Ton)	67.86	Domestic Gas Price ($/MCM)	17.09
NGL Export Price ($/Ton)	144.00	Export Gas Price ($/MCM)	90.00
% NGL for Export	100%	% Dry Gas for Export	100%

OPERATING COST DATA (1993 $000's)

Wet Gas Feedstock Cost ($/MCM)	-	
Chemicals Cost	382	
Utility Cost	19,432	
Maintenance Cost	985	
Labor Cost, Benefits	1,364	518
Other Expenses	10,134	

TRANSPORT COSTS (1996 $'s)

	DOM	EXP
Dry Gas In-Russia Costs ($/MCM)	-	40.00
Dry Gas Export Costs		40.00
NGL In-Russia Costs ($/Ton)	1.94	36.55
NGL Pipeline Costs	43.52	43.52
NGL Port Loading Charge		1.62
NGL Shipping Cost		15.10

CAPITAL COST DATA (1993 $000's)

	1995	1996	1997	Total
Gubkinsky GPP Expansion	43,700	157,500	90,300	291,500
Tarasovsky Gas Processing Plant	-	-	-	-
Gas Gathering Systems Cost	17,900	53,700	40,200	111,800
Metering Facilities Cost	440	1,290	970	2,700
Contributed Assets	9,842	24,686	14,644	49,172
Other Owners Costs	8,000	-	-	8,000
Infrastructure Costs	9,306	31,874	19,721	60,900
Initial Working Capital	2,839	-	-	2,839
Capital Costs	92,027	269,049	165,834	526,911

WORKING CAPITAL DATA

Days Receivables	45
Days Payables	45

FINANCING DATA

	WB/Other	Loan
% of Permanent Financing	70%	
Loan Amount, Commitment	424,854	424,855
Loan Interest Rate	8.15%	
Start of Repayment, Repayment Period	Jan 98	9.0
Commitment Fees %	0.25%	
Upfront Fee %	-	
Other Fin Fees & Close Costs (%, Amt)	-	

KEY RESULTS SUMMARY

Real Return on Investment (no taxes)		7.5%
Unleveraged Payback (Yrs)		7.7
Nominal NPV (Oct '93) @	15.0%	(72,477)
Real Return on Equity		2.5%
Leveraged Payback (Yrs)		12.8
Nominal NPV (Oct '93) @	15.0%	(97,377)
Min Debt Service Coverage		77%
Average Debt Service Coverage		100%

FINANCING DATA (cont'd)

	Actual
Required Reserves (1st Operating Yr)	39,710
Cash Flow Dedicated to Reserves	100%
Reinvestment Rate	3.0%

TAX DATA

Tax & Book In Service Month	Jan 96
Profits Tax	32.00%
15% Yr SL Property %	100.0%
Carryforward Years	5
VAT Tax (% of CapEx)	20.0%
Property Tax (% of Fixed Assets)	-
Road Tax (% of Revenues)	0.4%
Dry Gas Export Tariff ('93 $/MCM)	-
NGL Export Tariff ('93 $/Ton)	-

ECONOMIC DATA

Global Inflation Rate	2.8% **
Capital Cost Esc Rate	2.8%
O&M Esc Rate	2.8%
Export Gas Price Esc Rate	2.8%
Domestic Gas Price Esc Rate	2.8%
Export NGL Price Esc Rate	2.8%
Domestic NGL Price Esc Rate	2.8%

** Until 2000, 4% thereafter
(all escalation equivalent to inflation)

SENSITIVITY ANALYSIS FACTORS

O&M Cost	1.00
Gas Price	1.00
NGL Price	1.00
Capital Cost	1.00
Transport Cost	1.00
Wet Gas Price	1.00

SIBERIAN GAS PROCESSING PLANT
Annual Sources and Uses of Funds During Construction

($US Thousands)

	1995	1996	1997	Total	%
SOURCES OF FUNDS					
World Bank/Other Loan	68,895	209,514	146,445	424,854	70%
SIBNG Cash Equity	-	-	-	-	-
PNG Cash Equity	-	-	-	-	-
Gasprom Cash Equity	4,921	12,343	7,322	24,586	4%
SIBNG Equity	4,921	12,343	7,322	24,586	4%
PNG Equity	4,921	12,343	7,322	24,586	4%
Foreign Equity	14,763	37,029	21,966	73,758	12%
JV Operating Cash Flow	-	15,734	18,830	34,564	6%
Total Sources of Funds	98,422	299,306	209,207	606,935	100%
USES OF FUNDS					
Gubkinsky GPP Expansion	45,950	169,606	99,266	314,821	
Tarasovsky Gas Processing Plant	-	-	-	-	
Gas Gathering Systems Cost	18,820	57,765	44,281	120,866	
Metering Facilities Costs	463	1,388	1,068	2,919	
Infrastructure Costs	9,785	34,314	21,692	65,791	
Contributed Assets	9,842	24,686	14,644	49,172	
Other Owners Costs	8,281	-	-	8,281	
Initial Working Capital	3,000	-	-	3,000	
Capital Costs	96,140	287,757	180,952	564,849	93%
Other Loan Interest	1,260	10,830	28,080	40,170	
Other Loan Commitment Fees	1,021	719	175	1,915	
Upfront Fees	-	-	-	-	
Financing Costs	2,282	11,549	28,255	42,086	7%
Total Uses of Funds	98,422	299,306	209,207	606,935	100%

	$	%
Total Debt	424,854	70%
Operating Cash	34,564	6%
Equity Requirement	147,516	24%
	606,935	100%

MEMORANDA	WB/Other Loan	
Loan Draws, Amount	424,854	
Standby Facility	-	
Constr Loan Draws + Standby, Commitment	424,854	424,855
Constr Loan Int Rate	8.15%	
Commitment Fee Rate	0.25%	
Upfront Fee Rate	-	
Other Financing Fees (%, Amt)	-	
Repayment Period	9.0	

** NOTE: ANNUAL SANDU STATEMENT IS FOR PRESENTATION ONLY. VALUES ARE FROM QUARTERLY CALCULATIONS.

VAT TAX FUNDING				
VAT Tax	15,003	52,614	33,262	100,879
VAT Recovery Expressed in $'s	435	8,945	30,692	40,072
Net VAT Payment	14,569	43,669	2,570	60,807
PNG Cash Equity for VAT	2,428	7,278	428	10,135
SNGP Cash Equity for VAT	2,428	7,278	428	10,135
Gasprom Cash Equity for VAT	2,428	7,278	428	10,135
Foreign Equity for VAT	7,284	21,834	1,285	30,404
Cash Equity for VAT	14,569	43,669	2,570	60,807

Equity Requirement	147,516
Equity for VAT	60,807
Total Equity	208,323

SIBERIAN GAS PROCESSING PLANT
Equity Returns
(Thousands)

	1994	1995	1996	1997	1998	1999	2000	2001	2002	2003	2004	2005	2006
EQUITY INVESTMENT													
SNGP Equity	-	7,349	19,621	7,750	-	-	-	-	-	-	-	-	-
PNG Equity	-	7,349	19,621	7,750	-	-	-	-	-	-	-	-	-
Gasprom Equity	-	7,349	19,621	7,750	-	-	-	-	-	-	-	-	-
Foreign Equity	-	22,048	58,863	23,251	-	-	-	-	-	-	-	-	-
Additional Equity	-	-	-	-	18,125	-	3,994	9,821	3,750	-	-	-	-
Total Equity	-	44,095	117,727	46,501	18,125	-	3,994	9,821	3,750	-	-	-	-
CUMULATIVE EQUITY INVESTMENT													
SNGP Equity Holdings	-	7,349	26,970	34,721	34,721	34,721	34,721	34,721	34,721	34,721	34,721	34,721	34,721
PNG Equity Holdings	-	7,349	26,970	34,721	34,721	34,721	34,721	34,721	34,721	34,721	34,721	34,721	34,721
Gasprom Equity Holdings	-	7,349	26,970	34,721	34,721	34,721	34,721	34,721	34,721	34,721	34,721	34,721	34,721
Foreign Equity Holdings	-	22,048	80,911	104,162	122,287	122,287	126,281	136,102	139,852	139,852	139,852	139,852	139,852
CS Equity Position	-	44,095	161,822	208,323	226,449	226,449	230,443	240,264	244,014	244,014	244,014	244,014	244,014
PROJECT RETURN ON EQUITY													
CS Dividends	-	-	-	-	-	-	-	-	-	-	-	-	26,471
Less: Equity Investment	-	44,095	117,727	46,501	18,125	-	3,994	9,821	3,750	-	-	-	-
Net Cash Flow	-	(44,095)	(117,727)	(46,501)	(18,125)	-	(3,994)	(9,821)	(3,750)	-	-	-	26,471
Cumulative	-	(44,095)	(161,822)	(208,323)	(226,449)	(226,449)	(230,443)	(240,264)	(244,014)	(244,014)	(244,014)	(244,014)	(217,543)
Real Net Cash Flow	-	(42,015)	(109,117)	(41,927)	(15,897)	-	(3,315)	(7,837)	(2,878)	-	-	-	17,362
Real Return on Equity	2.5%												

SIBERIAN GAS PROCESSING PLANT
Equity Returns

(Thousands)

	1994	1995	1996	1997	1998	1999	2000	2001	2002	2003	2004	2005	2006
SNGP RETURNS													
SNGP Share of Common Stock		17%	17%	17%	15%	15%	15%	14%	14%	14%	14%	14%	14%
CS Dividends	-	-	-	-	-	-	-	-	-	-	-	-	26,471
SNGP CS Dividends		-	-	-	-	-	-	-	-	-	-	-	3,766
SNGP CS Dividends		-	-	-	-	-	-	-	-	-	-	-	3,766
Plus: SNGP NGL Pipeline Marginal Profit	-	-	-	-	-	-	-	-	-	-	-	-	-
Less: SNGP Equity	-	7,349	19,621	7,750	-	-	-	-	-	-	-	-	-
SNGP Net Cash Flow	-	(7,349)	(19,621)	(7,750)	-	-	-	-	-	-	-	-	3,766
Real SNGP Net Cash Flow	-	(7,003)	(18,186)	(6,988)	-	-	-	-	-	-	-	-	2,470
SNGP Real Return on Equity	2.4%												
PNG RETURNS													
PNG Share of Common Stock		17%	17%	17%	15%	15%	15%	14%	14%	14%	14%	14%	14%
CS Dividends	-	-	-	-	-	-	-	-	-	-	-	-	26,471
PNG CS Dividends		-	-	-	-	-	-	-	-	-	-	-	3,766
PNG CS Dividends		-	-	-	-	-	-	-	-	-	-	-	3,766
Plus: PNG Wet Gas Marginal Profit	-	-	-	-	-	-	-	-	-	-	-	-	-
Less: PNG Equity	-	7,349	19,621	7,750	-	-	-	-	-	-	-	-	-
PNG Net Cash Flow	-	(7,349)	(19,621)	(7,750)	-	-	-	-	-	-	-	-	3,766
Real PNG Net Cash Flow	-	(7,003)	(18,186)	(6,988)	-	-	-	-	-	-	-	-	2,470
PNG Real Return on Equity	2.4%												
GASPROM RETURNS													
Gasprom Share of Common Stock		17%	17%	17%	15%	15%	15%	14%	14%	14%	14%	14%	14%
CS Dividends	-	-	-	-	-	-	-	-	-	-	-	-	26,471
Gasprom CS Dividends		-	-	-	-	-	-	-	-	-	-	-	3,766
Gasprom CS Dividends		-	-	-	-	-	-	-	-	-	-	-	3,766
Plus: Gasprom Transport Marginal Profit	-	-	-	-	-	-	-	-	-	-	-	-	-
Less: Gasprom Equity	-	7,349	19,621	7,750	-	-	-	-	-	-	-	-	-
Gasprom Net Cash Flow	-	(7,349)	(19,621)	(7,750)	-	-	-	-	-	-	-	-	3,766
Real Gasprom Net Cash Flow	-	(7,003)	(18,186)	(6,988)	-	-	-	-	-	-	-	-	2,470
Gasprom Real Return on Equity	2.4%												
FOREIGN INVESTOR RETURNS													
Foreign Share of Common Stock		50%	50%	50%	54%	54%	55%	57%	57%	57%	57%	57%	57%
CS Dividends	-	-	-	-	-	-	-	-	-	-	-	-	26,471
Foreign CS Dividends		-	-	-	-	-	-	-	-	-	-	-	15,171
Foreign CS Dividends		-	-	-	-	-	-	-	-	-	-	-	15,171
Less: Foreign Equity	-	22,048	58,863	23,251	-	-	-	-	-	-	-	-	-
Less: Additional Equity Investment	-	-	-	-	18,125	-	3,994	9,821	3,750	-	-	-	-
Foreign Net Cash Flow	-	(22,048)	(58,863)	(23,251)	(18,125)	-	(3,994)	(9,821)	(3,750)	-	-	-	15,171
Real Foreign Cash Flow	-	(21,008)	(54,559)	(20,963)	(15,897)	-	(3,315)	(7,837)	(2,878)	-	-	-	9,951
Foreign Real Return on Equity	2.7%												

201

1990

SIBERIAN GAS PROCESSING PLANT
Equity Returns

(Thousands)

	2007	2008	2009	2010	2011	2012	2013	2014	2015	Total
EQUITY INVESTMENT										
SNGP Equity	-	-	-	-	-	-	-	-	-	34,721
PNG Equity	-	-	-	-	-	-	-	-	-	34,721
Gasprom Equity	-	-	-	-	-	-	-	-	-	34,721
Foreign Equity	-	-	-	-	-	-	-	-	-	104,162
Additional Equity	-	-	-	-	-	-	-	-	-	35,690
Total Equity	-	-	-	-	-	-	-	-	-	244,014
CUMULATIVE EQUITY INVESTMENT										
SNGP Equity Holdings	34,721	34,721	34,721	34,721	34,721	34,721	34,721	34,721	34,721	
PNG Equity Holdings	34,721	34,721	34,721	34,721	34,721	34,721	34,721	34,721	34,721	
Gasprom Equity Holdings	34,721	34,721	34,721	34,721	34,721	34,721	34,721	34,721	34,721	
Foreign Equity Holdings	139,852	139,852	139,852	139,852	139,852	139,852	139,852	139,852	139,852	
CS Equity Position	244,014	244,014	244,014	244,014	244,014	244,014	244,014	244,014	244,014	
PROJECT RETURN ON EQUITY										
CS Dividends	62,009	57,224	54,222	56,391	58,646	60,992	63,432	65,969	81,134	586,490
Less: Equity Investment	-	-	-	-	-	-	-	-	-	244,014
Net Cash Flow	62,009	57,224	54,222	56,391	58,646	60,992	63,432	65,969	81,134	342,476
Cumulative	(155,534)	(98,309)	(44,088)	12,303	70,949	131,941	195,373	261,342	342,476	
Real Net Cash Flow	39,108	34,702	31,617	31,617	31,617	31,617	31,617	31,617	37,390	95,279
Real Return on Equity										

SIBERIAN GAS PROCESSING PLANT
Equity Returns

(Thousands)

	2007	2008	2009	2010	2011	2012	2013	2014	2015	Total
SNGP RETURNS										
SNGP Share of Common Stock	14%	14%	14%	14%	14%	14%	14%	14%	14%	
CS Dividends	62,009	57,224	54,222	56,391	58,646	60,992	63,432	65,969	81,134	586,490
SNGP CS Dividends	8,823	8,142	7,715	8,024	8,345	8,679	9,026	9,387	11,545	83,451
SNGP CS Dividends	8,823	8,142	7,715	8,024	8,345	8,679	9,026	9,387	11,545	83,451
Plus: SNGP NGL Pipeline Marginal Profit	-	-	-	-	-	-	-	-	-	-
Less: SNGP Equity	-	-	-	-	-	-	-	-	-	34,721
SNGP Net Cash Flow	8,823	8,142	7,715	8,024	8,345	8,679	9,026	9,387	11,545	48,731
Real SNGP Net Cash Flow	5,565	4,938	4,499	4,499	4,499	4,499	4,499	4,499	5,320	13,109
SNGP Real Return on Equity										
PNG RETURNS										
PNG Share of Common Stock	14%	14%	14%	14%	14%	14%	14%	14%	14%	
CS Dividends	62,009	57,224	54,222	56,391	58,646	60,992	63,432	65,969	81,134	586,490
PNG CS Dividends	8,823	8,142	7,715	8,024	8,345	8,679	9,026	9,387	11,545	83,451
PNG CS Dividends	8,823	8,142	7,715	8,024	8,345	8,679	9,026	9,387	11,545	83,451
Plus: PNG Wet Gas Marginal Profit	-	-	-	-	-	-	-	-	-	-
Less: PNG Equity	-	-	-	-	-	-	-	-	-	34,721
PNG Net Cash Flow	8,823	8,142	7,715	8,024	8,345	8,679	9,026	9,387	11,545	48,731
Real PNG Net Cash Flow	5,565	4,938	4,499	4,499	4,499	4,499	4,499	4,499	5,320	13,109
PNG Real Return on Equity										
GASPROM RETURNS										
Gasprom Share of Common Stock	14%	14%	14%	14%	14%	14%	14%	14%	14%	
CS Dividends	62,009	57,224	54,222	56,391	58,646	60,992	63,432	65,969	81,134	586,490
Gasprom CS Dividends	8,823	8,142	7,715	8,024	8,345	8,679	9,026	9,387	11,545	83,451
Gasprom CS Dividends	8,823	8,142	7,715	8,024	8,345	8,679	9,026	9,387	11,545	83,451
Plus: Gasprom Transport Marginal Profit	-	-	-	-	-	-	-	-	-	-
Less: Gasprom Equity	-	-	-	-	-	-	-	-	-	34,721
Gasprom Net Cash Flow	8,823	8,142	7,715	8,024	8,345	8,679	9,026	9,387	11,545	48,731
Real Gasprom Net Cash Flow	5,565	4,938	4,499	4,499	4,499	4,499	4,499	4,499	5,320	13,109
Gasprom Real Return on Equity										
FOREIGN INVESTOR RETURNS										
Foreign Share of Common Stock	57%	57%	57%	57%	57%	57%	57%	57%	57%	
CS Dividends	62,009	57,224	54,222	56,391	58,646	60,992	63,432	65,969	81,134	586,490
Foreign CS Dividends	35,540	32,797	31,076	32,319	33,612	34,956	36,355	37,809	46,501	336,136
Foreign CS Dividends	35,540	32,797	31,076	32,319	33,612	34,956	36,355	37,809	46,501	336,136
Less: Foreign Equity	-	-	-	-	-	-	-	-	-	104,162
Less: Additional Equity Investment	-	-	-	-	-	-	-	-	-	35,690
Foreign Net Cash Flow	35,540	32,797	31,076	32,319	33,612	34,956	36,355	37,809	46,501	196,284
Real Foreign Cash Flow	22,414	19,889	18,121	18,121	18,121	18,121	18,121	18,121	21,429	55,951
Foreign Real Return on Equity										

203

SIBERIAN GAS PROCESSING PLANT
Data and Key Results

TIMING DATA

Cost Estimate Month	Oct 93	First, Last Operation Month	Jan 96	Dec 15
Financial Closing Month	Jan 95	Economic Life	20.00	

ENGINEERING DATA

	1994	1995	1996	1997	1998	1999	2000	2001
Rated Capacity (BCM/yr) in 1996, 1998	2.14	4.28						
Stream Factor		-	100%	100%	100%	100%	100%	100%
Operations Partial Year Factor	-	-	1.000	1.000	1.000	100%	100%	100%
Wet Gas Processed (MCM)	-	-	2.14	2.14	4.28	4.28	4.28	4.28
Dry Gas Production (BCM)	-	-	1.80	1.91	3.76	3.76	3.76	3.76
NGL Production (MMTons)	-	-	0.36	0.49	1.07	1.07	1.07	1.07

REVENUE DATA (1996 $'s)

NGL Domestic Price ($/Ton)	67.86	Domestic Gas Price ($/MCM)	17.09
NGL Export Price ($/Ton)	144.00	Export Gas Price ($/MCM)	90.00
% NGL for Export	100%	% Dry Gas for Export	100%

OPERATING COST DATA (1993 $000's)

Wet Gas Feedstock Cost ($/MCM)	-	
Chemicals Cost	382	
Utility Cost	19,432	
Maintenance Cost	985	
Labor Cost, Benefits	1,364	518
Other Expenses	10,134	

TRANSPORT COSTS (1996 $'s)

	DOM	EXP
Dry Gas In-Russia Costs ($/MCM)	-	40.00
Dry Gas Export Costs		24.00
NGL In-Russia Costs ($/Ton)	1.94	36.55
NGL Pipeline Costs	43.52	43.52
NGL Port Loading Charge		1.62
NGL Shipping Cost		15.10

CAPITAL COST DATA (1993 $000's)

	1995	1996	1997	Total
Gubkinsky GPP Expansion	43,700	157,500	90,300	291,500
Tarasovsky Gas Processing Plant	-	-	-	-
Gas Gathering Systems Cost	17,900	53,700	40,200	111,800
Metering Facilities Cost	440	1,290	970	2,700
Contributed Assets	9,839	18,723	6,809	35,371
Other Owners Costs	8,000	-	-	8,000
Infrastructure Costs	9,306	31,874	19,721	60,900
Initial Working Capital	2,839	-	-	2,839
Capital Costs	92,024	263,086	157,999	513,110

WORKING CAPITAL DATA

Days Receivables	45
Days Payables	45

FINANCING DATA

	WB/Other Loan	
% of Permanent Financing	70%	
Loan Amount, Commitment	414,707	414,710
Loan Interest Rate	8.15%	
Start of Repayment, Repayment Period	Jan 98	9.0
Commitment Fees %	0.25%	
Upfront Fee %	-	
Other Fin Fees & Close Costs (%, Amt)	-	

KEY RESULTS SUMMARY

Real Return on Investment (no taxes)		21.2%
Unleveraged Payback (Yrs)		3.5
Nominal NPV (Oct '93) @	15.0%	220,203
Real Return on Equity		22.2%
Leveraged Payback (Yrs)		3.5
Nominal NPV (Oct '93) @	15.0%	127,829
Min Debt Service Coverage		156%
Average Debt Service Coverage		195%

FINANCING DATA (cont'd)

	Actual
Required Reserves (1st Operating Yr)	38,762
Cash Flow Dedicated to Reserves	100%
Reinvestment Rate	3.0%

TAX DATA

Tax & Book In Service Month	Jan 96
Profits Tax	32.00%
15% Yr SL Property %	100.0%
Carryforward Years	5
VAT Tax (% of CapEx)	20.0%
Property Tax (% of Fixed Assets)	-
Road Tax (% of Revenues)	0.4%
Dry Gas Export Tariff ('93 $/MCM)	-
NGL Export Tariff ('93 $/Ton)	-

ECONOMIC DATA

Global Inflation Rate	2.8% **
Capital Cost Esc Rate	2.8%
O&M Esc Rate	2.8%
Export Gas Price Esc Rate	2.8%
Domestic Gas Price Esc Rate	2.8%
Export NGL Price Esc Rate	2.8%
Domestic NGL Price Esc Rate	2.8%

** Until 2000, 4% thereafter
(all escalation equivalent to inflation)

SENSITIVITY ANALYSIS FACTORS

O&M Cost	1.00
Gas Price	1.00
NGL Price	1.00
Capital Cost	1.00
Transport Cost	1.00
Wet Gas Price	1.00

SIBERIAN GAS PROCESSING PLANT
Annual Sources and Uses of Funds During Construction

($US Thousands)

	1995	1996	1997	Total	%
SOURCES OF FUNDS					
World Bank/Other Loan	68,875	205,237	140,595	414,707	70%
SIBNG Cash Equity	-	-	-	-	-
PNG Cash Equity	-	-	-	-	-
Gasprom Cash Equity	4,920	9,361	3,404	17,685	3%
SIBNG Equity	4,920	9,361	3,404	17,685	3%
PNG Equity	4,920	9,361	3,404	17,685	3%
Foreign Equity	14,759	28,084	10,213	53,056	9%
JV Operating Cash Flow	-	31,790	39,830	71,619	12%
Total Sources of Funds	98,393	293,195	200,851	592,439	100%
USES OF FUNDS					
Gubkinsky GPP Expansion	45,950	169,606	99,266	314,821	
Tarasovsky Gas Processing Plant	-	-	-	-	
Gas Gathering Systems Cost	18,820	57,765	44,281	120,866	
Metering Facilities Costs	463	1,388	1,068	2,919	
Infrastructure Costs	9,785	34,314	21,692	65,791	
Contributed Assets	9,839	18,723	6,809	35,371	
Other Owners Costs	8,281	-	-	8,281	
Initial Working Capital	3,000	-	-	3,000	
Capital Costs	96,137	281,794	173,116	551,048	93%
Other Loan Interest	1,260	10,703	27,569	39,531	
Other Loan Commitment Fees	996	698	166	1,860	
Upfront Fees	-	-	-	-	
Financing Costs	2,256	11,401	27,734	41,391	7%
Total Uses of Funds	98,393	293,195	200,851	592,439	100%

	$	%
Total Debt	414,707	70%
Operating Cash	71,619	12%
Equity Requirement	106,112	18%
	592,439	100%

MEMORANDA	WB/Other Loan	
Loan Draws, Amount	414,707	
Standby Facility	-	
Constr Loan Draws + Standby, Commitment	414,707	414,710
Constr Loan Int Rate	8.15%	
Commitment Fee Rate	0.25%	
Upfront Fee Rate	-	
Other Financing Fees (%, Amt)	-	
Repayment Period	9.0	

** NOTE: ANNUAL SANDU STATEMENT IS FOR PRESENTATION ONLY. VALUES ARE FROM QUARTERLY CALCULATIONS.

VAT TAX FUNDING				
VAT Tax	15,003	52,614	33,262	100,879
VAT Recovery Expressed in $'s	435	8,945	30,692	40,072
Net VAT Payment	14,569	43,669	2,570	60,807
PNG Cash Equity for VAT	2,428	7,278	428	10,135
SNGP Cash Equity for VAT	2,428	7,278	428	10,135
Gasprom Cash Equity for VAT	2,428	7,278	428	10,135
Foreign Equity for VAT	7,284	21,834	1,285	30,404
Cash Equity for VAT	14,569	43,669	2,570	60,807

Equity Requirement	106,112
Equity for VAT	60,807
Total Equity	166,920

1994

1785

SIBERIAN GAS PROCESSING PLANT
Equity Returns
(Thousands)

	1994	1995	1996	1997	1998	1999	2000	2001	2002	2003	2004	2005	2006
EQUITY INVESTMENT													
SNGP Equity	-	7,348	16,640	3,833	-	-	-	-	-	-	-	-	-
PNG Equity	-	7,348	16,640	3,833	-	-	-	-	-	-	-	-	-
Gasprom Equity	-	7,348	16,640	3,833	-	-	-	-	-	-	-	-	-
Foreign Equity	-	22,043	49,919	11,498	-	-	-	-	-	-	-	-	-
Additional Equity	-	-	-	-	-	-	-	-	-	-	-	-	-
Total Equity	-	44,087	99,838	22,995	-	-	-	-	-	-	-	-	-
CUMULATIVE EQUITY INVESTMENT													
SNGP Equity Holdings	-	7,348	23,987	27,820	27,820	27,820	27,820	27,820	27,820	27,820	27,820	27,820	27,820
PNG Equity Holdings	-	7,348	23,987	27,820	27,820	27,820	27,820	27,820	27,820	27,820	27,820	27,820	27,820
Gasprom Equity Holdings	-	7,348	23,987	27,820	27,820	27,820	27,820	27,820	27,820	27,820	27,820	27,820	27,820
Foreign Equity Holdings	-	22,043	71,962	83,460	83,460	83,460	83,460	83,460	83,460	83,460	83,460	83,460	83,460
CS Equity Position	-	44,087	143,924	166,920	166,920	166,920	166,920	166,920	166,920	166,920	166,920	166,920	166,920
PROJECT RETURN ON EQUITY													
CS Dividends	-	-	-	-	4,611	71,981	62,704	57,574	61,998	65,070	63,327	53,793	82,652
Less: Equity Investment	-	44,087	99,838	22,995	-	-	-	-	-	-	-	-	-
Net Cash Flow	-	(44,087)	(99,838)	(22,995)	4,611	71,981	62,704	57,574	61,998	65,070	63,327	53,793	82,652
Cumulative	-	(44,087)	(143,924)	(166,920)	(162,309)	(90,328)	(27,624)	29,950	91,947	157,017	220,344	274,137	356,789
Real Net Cash Flow	-	(42,007)	(92,537)	(20,733)	4,044	61,412	52,041	45,945	47,572	48,010	44,926	36,695	54,213
Real Return on Equity	22.2%												

206

SIBERIAN GAS PROCESSING PLANT
Equity Returns
(Thousands)

	1994	1995	1996	1997	1998	1999	2000	2001	2002	2003	2004	2005	2006
SNGP RETURNS													
SNGP Share of Common Stock		17%	17%	17%	17%	17%	17%	17%	17%	17%	17%	17%	17%
CS Dividends	-	-	-	-	4,611	71,981	62,704	57,574	61,998	65,070	63,327	53,793	82,652
SNGP CS Dividends		-	-	-	768	11,997	10,451	9,596	10,333	10,845	10,554	8,965	13,775
SNGP CS Dividends		-	-	-	768	11,997	10,451	9,596	10,333	10,845	10,554	8,965	13,775
Plus: SNGP NGL Pipeline Marginal Profit	-	-	-	-	-	-	-	-	-	-	-	-	-
Less: SNGP Equity	-	7,348	16,640	3,833	-	-	-	-	-	-	-	-	-
SNGP Net Cash Flow	-	(7,348)	(16,640)	(3,833)	768	11,997	10,451	9,596	10,333	10,845	10,554	8,965	13,775
Real SNGP Net Cash Flow	-	(7,001)	(15,423)	(3,456)	674	10,235	8,673	7,657	7,929	8,002	7,488	6,116	9,035
SNGP Real Return on Equity	22.2%												
PNG RETURNS													
PNG Share of Common Stock		17%	17%	17%	17%	17%	17%	17%	17%	17%	17%	17%	17%
CS Dividends	-	-	-	-	4,611	71,981	62,704	57,574	61,998	65,070	63,327	53,793	82,652
PNG CS Dividends		-	-	-	768	11,997	10,451	9,596	10,333	10,845	10,554	8,965	13,775
PNG CS Dividends		-	-	-	768	11,997	10,451	9,596	10,333	10,845	10,554	8,965	13,775
Plus: PNG Wet Gas Marginal Profit	-	-	-	-	-	-	-	-	-	-	-	-	-
Less: PNG Equity	-	7,348	16,640	3,833	-	-	-	-	-	-	-	-	-
PNG Net Cash Flow	-	(7,348)	(16,640)	(3,833)	768	11,997	10,451	9,596	10,333	10,845	10,554	8,965	13,775
Real PNG Net Cash Flow	-	(7,001)	(15,423)	(3,456)	674	10,235	8,673	7,657	7,929	8,002	7,488	6,116	9,035
PNG Real Return on Equity	22.2%												
GASPROM RETURNS													
Gasprom Share of Common Stock		17%	17%	17%	17%	17%	17%	17%	17%	17%	17%	17%	17%
CS Dividends	-	-	-	-	4,611	71,981	62,704	57,574	61,998	65,070	63,327	53,793	82,652
Gasprom CS Dividends		-	-	-	768	11,997	10,451	9,596	10,333	10,845	10,554	8,965	13,775
Gasprom CS Dividends		-	-	-	768	11,997	10,451	9,596	10,333	10,845	10,554	8,965	13,775
Plus: Gasprom Transport Marginal Profit	-	-	-	-	-	-	-	-	-	-	-	-	-
Less: Gasprom Equity	-	7,348	16,640	3,833	-	-	-	-	-	-	-	-	-
Gasprom Net Cash Flow	-	(7,348)	(16,640)	(3,833)	768	11,997	10,451	9,596	10,333	10,845	10,554	8,965	13,775
Real Gasprom Net Cash Flow	-	(7,001)	(15,423)	(3,456)	674	10,235	8,673	7,657	7,929	8,002	7,488	6,116	9,035
Gasprom Real Return on Equity	22.2%												
FOREIGN INVESTOR RETURNS													
Foreign Share of Common Stock		50%	50%	50%	50%	50%	50%	50%	50%	50%	50%	50%	50%
CS Dividends	-	-	-	-	4,611	71,981	62,704	57,574	61,998	65,070	63,327	53,793	82,652
Foreign CS Dividends		-	-	-	2,305	35,990	31,352	28,787	30,999	32,535	31,663	26,896	41,326
Foreign CS Dividends		-	-	-	2,305	35,990	31,352	28,787	30,999	32,535	31,663	26,896	41,326
Less: Foreign Equity	-	22,043	49,919	11,498	-	-	-	-	-	-	-	-	-
Less: Additional Equity Investment	-	-	-	-	-	-	-	-	-	-	-	-	-
Foreign Net Cash Flow	-	(22,043)	(49,919)	(11,498)	2,305	35,990	31,352	28,787	30,999	32,535	31,663	26,896	41,326
Real Foreign Cash Flow	-	(21,003)	(46,268)	(10,367)	2,022	30,706	26,020	22,972	23,786	24,005	22,463	18,347	27,106
Foreign Real Return on Equity	22.2%												

207

SIBERIAN GAS PROCESSING PLANT
Equity Returns
(Thousands)

	2007	2008	2009	2010	2011	2012	2013	2014	2015	Total
EQUITY INVESTMENT										
SNGP Equity	-	-	-	-	-	-	-	-	-	27,820
PNG Equity	-	-	-	-	-	-	-	-	-	27,820
Gasprom Equity	-	-	-	-	-	-	-	-	-	27,820
Foreign Equity	-	-	-	-	-	-	-	-	-	83,460
Additional Equity	-	-	-	-	-	-	-	-	-	-
Total Equity	-	-	-	-	-	-	-	-	-	166,920
CUMULATIVE EQUITY INVESTMENT										
SNGP Equity Holdings	27,820	27,820	27,820	27,820	27,820	27,820	27,820	27,820	27,820	
PNG Equity Holdings	27,820	27,820	27,820	27,820	27,820	27,820	27,820	27,820	27,820	
Gasprom Equity Holdings	27,820	27,820	27,820	27,820	27,820	27,820	27,820	27,820	27,820	
Foreign Equity Holdings	83,460	83,460	83,460	83,460	83,460	83,460	83,460	83,460	83,460	
CS Equity Position	166,920	166,920	166,920	166,920	166,920	166,920	166,920	166,920	166,920	
PROJECT RETURN ON EQUITY										
CS Dividends	109,833	114,226	118,795	123,547	128,489	133,628	138,973	144,532	177,758	1,713,489
Less: Equity Investment	-	-	-	-	-	-	-	-	-	166,920
Net Cash Flow	109,833	114,226	118,795	123,547	128,489	133,628	138,973	144,532	177,758	1,546,569
Cumulative	466,621	580,847	699,642	823,189	951,678	1,085,306	1,224,279	1,368,811	1,546,569	
Real Net Cash Flow	69,270	69,270	69,270	69,270	69,270	69,270	69,270	69,270	81,917	875,657
Real Return on Equity										

SIBERIAN GAS PROCESSING PLANT
Equity Returns

(Thousands)

	2007	2008	2009	2010	2011	2012	2013	2014	2015	Total
SNGP RETURNS										
SNGP Share of Common Stock	17%	17%	17%	17%	17%	17%	17%	17%	17%	
CS Dividends	109,833	114,226	118,795	123,547	128,489	133,628	138,973	144,532	177,758	1,713,489
SNGP CS Dividends	18,305	19,038	19,799	20,591	21,415	22,271	23,162	24,089	29,626	285,581
SNGP CS Dividends	18,305	19,038	19,799	20,591	21,415	22,271	23,162	24,089	29,626	285,581
Plus: SNGP NGL Pipeline Marginal Profit	-	-	-	-	-	-	-	-	-	-
Less: SNGP Equity	-	-	-	-	-	-	-	-	-	27,820
SNGP Net Cash Flow	18,305	19,038	19,799	20,591	21,415	22,271	23,162	24,089	29,626	257,761
Real SNGP Net Cash Flow	11,545	11,545	11,545	11,545	11,545	11,545	11,545	11,545	13,653	145,943
SNGP Real Return on Equity										
PNG RETURNS										
PNG Share of Common Stock	17%	17%	17%	17%	17%	17%	17%	17%	17%	
CS Dividends	109,833	114,226	118,795	123,547	128,489	133,628	138,973	144,532	177,758	1,713,489
PNG CS Dividends	18,305	19,038	19,799	20,591	21,415	22,271	23,162	24,089	29,626	285,581
PNG CS Dividends	18,305	19,038	19,799	20,591	21,415	22,271	23,162	24,089	29,626	285,581
Plus: PNG Wet Gas Marginal Profit	-	-	-	-	-	-	-	-	-	-
Less: PNG Equity	-	-	-	-	-	-	-	-	-	27,820
PNG Net Cash Flow	18,305	19,038	19,799	20,591	21,415	22,271	23,162	24,089	29,626	257,761
Real PNG Net Cash Flow	11,545	11,545	11,545	11,545	11,545	11,545	11,545	11,545	13,653	145,943
PNG Real Return on Equity										
GASPROM RETURNS										
Gasprom Share of Common Stock	17%	17%	17%	17%	17%	17%	17%	17%	17%	
CS Dividends	109,833	114,226	118,795	123,547	128,489	133,628	138,973	144,532	177,758	1,713,489
Gasprom CS Dividends	18,305	19,038	19,799	20,591	21,415	22,271	23,162	24,089	29,626	285,581
Gasprom CS Dividends	18,305	19,038	19,799	20,591	21,415	22,271	23,162	24,089	29,626	285,581
Plus: Gasprom Transport Marginal Profit	-	-	-	-	-	-	-	-	-	-
Less: Gasprom Equity	-	-	-	-	-	-	-	-	-	27,820
Gasprom Net Cash Flow	18,305	19,038	19,799	20,591	21,415	22,271	23,162	24,089	29,626	257,761
Real Gasprom Net Cash Flow	11,545	11,545	11,545	11,545	11,545	11,545	11,545	11,545	13,653	145,943
Gasprom Real Return on Equity										
FOREIGN INVESTOR RETURNS										
Foreign Share of Common Stock	50%	50%	50%	50%	50%	50%	50%	50%	50%	
CS Dividends	109,833	114,226	118,795	123,547	128,489	133,628	138,973	144,532	177,758	1,713,489
Foreign CS Dividends	54,916	57,113	59,397	61,773	64,244	66,814	69,487	72,266	88,879	856,744
Foreign CS Dividends	54,916	57,113	59,397	61,773	64,244	66,814	69,487	72,266	88,879	856,744
Less: Foreign Equity	-	-	-	-	-	-	-	-	-	83,460
Less: Additional Equity Investment	-	-	-	-	-	-	-	-	-	-
Foreign Net Cash Flow	54,916	57,113	59,397	61,773	64,244	66,814	69,487	72,266	88,879	773,284
Real Foreign Cash Flow	34,635	34,635	34,635	34,635	34,635	34,635	34,635	34,635	40,959	437,828
Foreign Real Return on Equity										

SIBERIAN GAS PROCESSING PLANT
Data and Key Results

TIMING DATA

Cost Estimate Month	Oct 93	First, Last Operation Month	Jan 96 Dec 15
Financial Closing Month	Jan 95	Economic Life	20.00

ENGINEERING DATA

	1994	1995	1996	1997	1998	1999	2000	2001
Rated Capacity (BCM/yr)in 1996, 1998	2.14	4.28						
Stream Factor		-	100%	100%	100%	100%	100%	100%
Operations Partial Year Factor	-	-	1.000	1.000	1.000	100%	100%	100%
Wet Gas Processed (MCM)	-	-	2.14	2.14	4.28	4.28	4.28	4.28
Dry Gas Production (BCM)	-	-	1.80	1.91	3.76	3.76	3.76	3.76
NGL Production (MMTons)	-	-	0.36	0.49	1.07	1.07	1.07	1.07

REVENUE DATA (1996 $'s)

NGL Domestic Price ($/Ton)	67.86	Domestic Gas Price ($/MCM)	17.09
NGL Export Price ($/Ton)	144.00	Export Gas Price ($/MCM)	90.00
% NGL for Export	100%	% Dry Gas for Export	100%

OPERATING COST DATA (1993 $000's)

Wet Gas Feedstock Cost ($/MCM)	-	
Chemicals Cost	382	
Utility Cost	19,432	
Maintenance Cost	985	
Labor Cost, Benefits	1,364	518
Other Expenses	10,134	

TRANSPORT COSTS (1996 $'s)

	DOM	EXP
Dry Gas In-Russia Costs ($/MCM)	-	40.00
Dry Gas Export Costs		32.00
NGL In-Russia Costs ($/Ton)	1.94	36.55
NGL Pipeline Costs	32.64	32.64
NGL Port Loading Charge		1.62
NGL Shipping Cost		15.10

CAPITAL COST DATA (1993 $000's)

	1995	1996	1997	Total
Gubkinsky GPP Expansion	43,700	157,500	90,300	291,500
Tarasovsky Gas Processing Plant	-	-	-	-
Gas Gathering Systems Cost	17,900	53,700	40,200	111,800
Metering Facilities Cost	440	1,290	970	2,700
Contributed Assets	9,840	20,906	9,423	40,169
Other Owners Costs	8,000	-	-	8,000
Infrastructure Costs	9,306	31,874	19,721	60,900
Initial Working Capital	2,839	-	-	2,839
Capital Costs	92,025	265,269	160,614	517,908

WORKING CAPITAL DATA

Days Receivables	45
Days Payables	45

FINANCING DATA

	WB/Other Loan	
% of Permanent Financing	70%	
Loan Amount, Commitment	418,240	418,240
Loan Interest Rate	8.15%	
Start of Repayment, Repayment Period	Jan 98	9.0
Commitment Fees %	0.25%	
Upfront Fee %	-	
Other Fin Fees & [illegible] Costs (%, Amt)	-	

KEY RESULTS SUMMARY

Real Return on Investment (no taxes)	17.1%
Unleveraged Payback (Yrs)	4.3
Nominal NPV (Oct '93) @ 15.0%	128,849
Real Return on Equity	16.2%
Leveraged Payback (Yrs)	5.2
Nominal NPV (Oct '93) @ 15.0%	60,289
Min Debt Service Coverage	131%
Average Debt Service Coverage	168%

FINANCING DATA (cont'd)

	Actual
Required Reserves (1st Operating Yr)	39,092
Cash Flow Dedicated to Reserves	100%
Reinvestment Rate	3.0%

TAX DATA

Tax & Book In Service Month	Jan 96
Profits Tax	32.00%
15% Yr SL Property %	100.0%
Carryforward Years	5
VAT Tax (% of CapEx)	20.0%
Property Tax (% of Fixed Assets)	-
Road Tax (% of Revenues)	0.4%
Dry Gas Export Tariff ('93 $/MCM)	-
NGL Export Tariff ('93 $/Ton)	-

ECONOMIC DATA

Global Inflation Rate	2.8% **
Capital Cost Esc Rate	2.8%
O&M Esc Rate	2.8%
Export Gas Price Esc Rate	2.8%
Domestic Gas Price Esc Rate	2.8%
Export NGL Price Esc Rate	2.8%
Domestic NGL Price Esc Rate	2.8%

** Until 2000, 4% thereafter
(all escalation equivalent to inflation)

SENSITIVITY ANALYSIS FACTORS

O&M Cost	1.00
Gas Price	1.00
NGL Price	1.00
Capital Cost	1.00
Transport Cost	1.00
Wet Gas Price	1.00

210

SIBERIAN GAS PROCESSING PLANT
Annual Sources and Uses of Funds During Construction

($US Thousands)

	1995	1996	1997	Total	%
SOURCES OF FUNDS					
World Bank/Other Loan	68,882	206,802	142,555	418,240	70%
SIBNG Cash Equity	-	-	-	-	-
PNG Cash Equity	-	-	-	-	-
Gasprom Cash Equity	4,920	10,453	4,711	20,084	3%
SIBNG Equity	4,920	10,453	4,711	20,084	3%
PNG Equity	4,920	10,453	4,711	20,084	3%
Foreign Equity	14,760	31,359	14,134	60,253	10%
JV Operating Cash Flow	-	25,912	32,826	58,739	10%
Total Sources of Funds	98,403	295,432	203,650	597,485	100%
USES OF FUNDS					
Gubkinsky GPP Expansion	45,950	169,606	99,266	314,821	
Tarasovsky Gas Processing Plant	-	-	-	-	
Gas Gathering Systems Cost	18,820	57,765	44,281	120,866	
Metering Facilities Costs	463	1,388	1,068	2,919	
Infrastructure Costs	9,785	34,314	21,692	65,791	
Contributed Assets	9,840	20,906	9,423	40,169	
Other Owners Costs	8,281	-	-	8,281	
Initial Working Capital	3,000	-	-	3,000	
Capital Costs	96,138	283,977	175,731	555,847	93%
Other Loan Interest	1,260	10,749	27,751	39,760	
Other Loan Commitment Fees	1,005	705	169	1,879	
Upfront Fees	-	-	-	-	
Financing Costs	2,265	11,455	27,919	41,639	7%
Total Uses of Funds	98,403	295,432	203,650	597,485	100%

	$	%
Total Debt	418,240	70%
Operating Cash	58,739	10%
Equity Requirement	120,507	20%
	597,485	100%

MEMORANDA	WB/Other Loan	
Loan Draws, Amount	418,240	
Standby Facility	-	
Constr Loan Draws + Standby, Commitment	418,240	418,240
Constr Loan Int Rate	8.15%	
Commitment Fee Rate	0.25%	
Upfront Fee Rate	-	
Other Financing Fees (%, Amt)	-	
Repayment Period	9.0	

** NOTE: ANNUAL SANDU STATEMENT IS FOR PRESENTATION ONLY. VALUES ARE FROM QUARTERLY CALCULATIONS.

VAT TAX FUNDING				
VAT Tax	15,003	52,614	33,262	100,879
VAT Recovery Expressed in $'s	435	8,945	30,692	40,072
Net VAT Payment	14,569	43,669	2,570	60,807
PNG Cash Equity for VAT	2,428	7,278	428	10,135
SNGP Cash Equity for VAT	2,428	7,278	428	10,135
Gasprom Cash Equity for VAT	2,428	7,278	428	10,135
Foreign Equity for VAT	7,284	21,834	1,285	30,404
Cash Equity for VAT	14,569	43,669	2,570	60,807

Equity Requirement	120,507
Equity for VAT	60,807
Total Equity	181,314

1800

211

SIBERIAN GAS PROCESSING PLANT
Equity Returns
(Thousands)

	1994	1995	1996	1997	1998	1999	2000	2001	2002	2003	2004	2005	2006
EQUITY INVESTMENT													
SNGP Equity	-	7,348	17,731	5,140	-	-	-	-	-	-	-	-	-
PNG Equity	-	7,348	17,731	5,140	-	-	-	-	-	-	-	-	-
Gasprom Equity	-	7,348	17,731	5,140	-	-	-	-	-	-	-	-	-
Foreign Equity	-	22,045	53,193	15,419	-	-	-	-	-	-	-	-	-
Additional Equity	-	-	-	-	-	-	-	-	-	-	-	-	-
Total Equity	-	44,090	106,386	30,839	-	-	-	-	-	-	-	-	-
CUMULATIVE EQUITY INVESTMENT													
SNGP Equity Holdings	-	7,348	25,079	30,219	30,219	30,219	30,219	30,219	30,219	30,219	30,219	30,219	30,219
PNG Equity Holdings	-	7,348	25,079	30,219	30,219	30,219	30,219	30,219	30,219	30,219	30,219	30,219	30,219
Gasprom Equity Holdings	-	7,348	25,079	30,219	30,219	30,219	30,219	30,219	30,219	30,219	30,219	30,219	30,219
Foreign Equity Holdings	-	22,045	75,238	90,657	90,657	90,657	90,657	90,657	90,657	90,657	90,657	90,657	90,657
CS Equity Position	-	44,090	150,476	181,314	181,314	181,314	181,314	181,314	181,314	181,314	181,314	181,314	181,314
PROJECT RETURN ON EQUITY													
CS Dividends	-	-	-	-	-	36,981	45,317	42,253	48,412	53,685	49,355	36,419	64,811
Less: Equity Investment	-	44,090	106,386	30,839	-	-	-	-	-	-	-	-	-
Net Cash Flow	-	(44,090)	(106,386)	(30,839)	-	36,981	45,317	42,253	48,412	53,685	49,355	36,419	64,811
Cumulative	-	(44,090)	(150,476)	(181,314)	(181,314)	(144,333)	(99,016)	(56,762)	(8,350)	45,335	94,690	131,109	195,921
Real Net Cash Flow	-	(42,010)	(98,606)	(27,805)	-	31,552	37,611	33,719	37,148	39,609	35,014	24,843	42,511
Real Return on Equity	16.2%												

SIBERIAN GAS PROCESSING PLANT
Equity Returns

(Thousands)

	1994	1995	1996	1997	1998	1999	2000	2001	2002	2003	2004	2005	2006
SNGP RETURNS													
SNGP Share of Common Stock		17%	17%	17%	17%	17%	17%	17%	17%	17%	17%	17%	17%
CS Dividends	-	-	-	-	-	36,981	45,317	42,253	48,412	53,685	49,355	36,419	64,811
SNGP CS Dividends		-	-	-	-	6,164	7,553	7,042	8,069	8,947	8,226	6,070	10,802
SNGP CS Dividends		-	-	-	-	6,164	7,553	7,042	8,069	8,947	8,226	6,070	10,802
Plus: SNGP NGL Pipeline Marginal Profit	-	-	-	-	-	-	-	-	-	-	-	-	-
Less: SNGP Equity	-	7,348	17,731	5,140	-	-	-	-	-	-	-	-	-
SNGP Net Cash Flow	-	(7,348)	(17,731)	(5,140)	-	6,164	7,553	7,042	8,069	8,947	8,226	6,070	10,802
Real SNGP Net Cash Flow	-	(7,002)	(16,434)	(4,634)	-	5,259	6,268	5,620	6,191	6,602	5,836	4,141	7,085
SNGP Real Return on Equity	16.2%												
PNG RETURNS													
PNG Share of Common Stock		17%	17%	17%	17%	17%	17%	17%	17%	17%	17%	17%	17%
CS Dividends	-	-	-	-	-	36,981	45,317	42,253	48,412	53,685	49,355	36,419	64,811
PNG CS Dividends		-	-	-	-	6,164	7,553	7,042	8,069	8,947	8,226	6,070	10,802
PNG CS Dividends		-	-	-	-	6,164	7,553	7,042	8,069	8,947	8,226	6,070	10,802
Plus: PNG Wet Gas Marginal Profit	-	-	-	-	-	-	-	-	-	-	-	-	-
Less: PNG Equity	-	7,348	17,731	5,140	-	-	-	-	-	-	-	-	-
PNG Net Cash Flow	-	(7,348)	(17,731)	(5,140)	-	6,164	7,553	7,042	8,069	8,947	8,226	6,070	10,802
Real PNG Net Cash Flow	-	(7,002)	(16,434)	(4,634)	-	5,259	6,268	5,620	6,191	6,602	5,836	4,141	7,085
PNG Real Return on Equity	16.2%												
GASPROM RETURNS													
Gasprom Share of Common Stock		17%	17%	17%	17%	17%	17%	17%	17%	17%	17%	17%	17%
CS Dividends	-	-	-	-	-	36,981	45,317	42,253	48,412	53,685	49,355	36,419	64,811
Gasprom CS Dividends		-	-	-	-	6,164	7,553	7,042	8,069	8,947	8,226	6,070	10,802
Gasprom CS Dividends		-	-	-	-	6,164	7,553	7,042	8,069	8,947	8,226	6,070	10,802
Plus: Gasprom Transport Marginal Profit	-	-	-	-	-	-	-	-	-	-	-	-	-
Less: Gasprom Equity	-	7,348	17,731	5,140	-	-	-	-	-	-	-	-	-
Gasprom Net Cash Flow	-	(7,348)	(17,731)	(5,140)	-	6,164	7,553	7,042	8,069	8,947	8,226	6,070	10,802
Real Gasprom Net Cash Flow	-	(7,002)	(16,434)	(4,634)	-	5,259	6,268	5,620	6,191	6,602	5,836	4,141	7,085
Gasprom Real Return on Equity	16.2%												
FOREIGN INVESTOR RETURNS													
Foreign Share of Common Stock		50%	50%	50%	50%	50%	50%	50%	50%	50%	50%	50%	50%
CS Dividends	-	-	-	-	-	36,981	45,317	42,253	48,412	53,685	49,355	36,419	64,811
Foreign CS Dividends		-	-	-	-	18,491	22,659	21,127	24,206	26,842	24,678	18,210	32,406
Foreign CS Dividends		-	-	-	-	18,491	22,659	21,127	24,206	26,842	24,678	18,210	32,406
Less: Foreign Equity	-	22,045	53,193	15,419	-	-	-	-	-	-	-	-	-
Less: Additional Equity Investment	-	-	-	-	-	-	-	-	-	-	-	-	-
Foreign Net Cash Flow	-	(22,045)	(53,193)	(15,419)	-	18,491	22,659	21,127	24,206	26,842	24,678	18,210	32,406
Real Foreign Cash Flow	-	(21,005)	(49,303)	(13,902)	-	15,776	18,805	16,860	18,574	19,805	17,507	12,422	21,255
Foreign Real Return on Equity	16.2%												

213 1807

REVISED CASE 1B.1: Wet Gas = $0; Ex d Tax; NGL Pipeline Tariff @ -25%

SIBERIAN GAS PROCESSING PLANT
Equity Returns

(Thousands)

	2007	2008	2009	2010	2011	2012	2013	2014	2015	Total
EQUITY INVESTMENT										
SNGP Equity	-	-	-	-	-	-	-	-	-	30,219
PNG Equity	-	-	-	-	-	-	-	-	-	30,219
Gasprom Equity	-	-	-	-	-	-	-	-	-	30,219
Foreign Equity	-	-	-	-	-	-	-	-	-	90,657
Additional Equity	-	-	-	-	-	-	-	-	-	-
Total Equity	-	-	-	-	-	-	-	-	-	181,314
CUMULATIVE EQUITY INVESTMENT										
SNGP Equity Holdings	30,219	30,219	30,219	30,219	30,219	30,219	30,219	30,219	30,219	
PNG Equity Holdings	30,219	30,219	30,219	30,219	30,219	30,219	30,219	30,219	30,219	
Gasprom Equity Holdings	30,219	30,219	30,219	30,219	30,219	30,219	30,219	30,219	30,219	
Foreign Equity Holdings	90,657	90,657	90,657	90,657	90,657	90,657	90,657	90,657	90,657	
CS Equity Position	181,314	181,314	181,314	181,314	181,314	181,314	181,314	181,314	181,314	
PROJECT RETURN ON EQUITY										
CS Dividends	91,481	95,141	98,946	102,904	107,020	111,301	115,753	120,383	148,057	1,368,223
Less: Equity Investment	-	-	-	-	-	-	-	-	-	181,314
Net Cash Flow	91,481	95,141	98,946	102,904	107,020	111,301	115,753	120,383	148,057	1,186,908
Cumulative	287,402	382,543	481,489	584,393	691,413	802,715	918,468	1,038,851	1,186,908	
Real Net Cash Flow	57,696	57,696	57,696	57,696	57,696	57,696	57,696	57,696	68,230	643,385
Real Return on Equity										

SIBERIAN GAS PROCESSING PLANT
Equity Returns

(Thousands)

	2007	2008	2009	2010	2011	2012	2013	2014	2015	Total
SNGP RETURNS										
SNGP Share of Common Stock	17%	17%	17%	17%	17%	17%	17%	17%	17%	
CS Dividends	91,481	95,141	98,946	102,904	107,020	111,301	115,753	120,383	148,057	1,368,223
SNGP CS Dividends	15,247	15,857	16,491	17,151	17,837	18,550	19,292	20,064	24,676	228,037
SNGP CS Dividends	15,247	15,857	16,491	17,151	17,837	18,550	19,292	20,064	24,676	228,037
Plus: SNGP NGL Pipeline Marginal Profit	-	-	-	-	-	-	-	-	-	-
Less: SNGP Equity	-	-	-	-	-	-	-	-	-	30,219
SNGP Net Cash Flow	15,247	15,857	16,491	17,151	17,837	18,550	19,292	20,064	24,676	197,818
Real SNGP Net Cash Flow	9,616	9,616	9,616	9,616	9,616	9,616	9,616	9,616	11,372	107,231
SNGP Real Return on Equity										
PNG RETURNS										
PNG Share of Common Stock	17%	17%	17%	17%	17%	17%	17%	17%	17%	
CS Dividends	91,481	95,141	98,946	102,904	107,020	111,301	115,753	120,383	148,057	1,368,223
PNG CS Dividends	15,247	15,857	16,491	17,151	17,837	18,550	19,292	20,064	24,676	228,037
PNG CS Dividends	15,247	15,857	16,491	17,151	17,837	18,550	19,292	20,064	24,676	228,037
Plus: PNG Wet Gas Marginal Profit	-	-	-	-	-	-	-	-	-	-
Less: PNG Equity	-	-	-	-	-	-	-	-	-	30,219
PNG Net Cash Flow	15,247	15,857	16,491	17,151	17,837	18,550	19,292	20,064	24,676	197,818
Real PNG Net Cash Flow	9,616	9,616	9,616	9,616	9,616	9,616	9,616	9,616	11,372	107,231
PNG Real Return on Equity										
GASPROM RETURNS										
Gasprom Share of Common Stock	17%	17%	17%	17%	17%	17%	17%	17%	17%	
CS Dividends	91,481	95,141	98,946	102,904	107,020	111,301	115,753	120,383	148,057	1,368,223
Gasprom CS Dividends	15,247	15,857	16,491	17,151	17,837	18,550	19,292	20,064	24,676	228,037
Gasprom CS Dividends	15,247	15,857	16,491	17,151	17,837	18,550	19,292	20,064	24,676	228,037
Plus: Gasprom Transport Marginal Profit	-	-	-	-	-	-	-	-	-	-
Less: Gasprom Equity	-	-	-	-	-	-	-	-	-	30,219
Gasprom Net Cash Flow	15,247	15,857	16,491	17,151	17,837	18,550	19,292	20,064	24,676	197,818
Real Gasprom Net Cash Flow	9,616	9,616	9,616	9,616	9,616	9,616	9,616	9,616	11,372	107,231
Gasprom Real Return on Equity										
FOREIGN INVESTOR RETURNS										
Foreign Share of Common Stock	50%	50%	50%	50%	50%	50%	50%	50%	50%	
CS Dividends	91,481	95,141	98,946	102,904	107,020	111,301	115,753	120,383	148,057	1,368,223
Foreign CS Dividends	45,741	47,570	49,473	51,452	53,510	55,651	57,877	60,192	74,029	684,111
Foreign CS Dividends	45,741	47,570	49,473	51,452	53,510	55,651	57,877	60,192	74,029	684,111
Less: Foreign Equity	-	-	-	-	-	-	-	-	-	90,657
Less: Additional Equity Investment	-	-	-	-	-	-	-	-	-	-
Foreign Net Cash Flow	45,741	47,570	49,473	51,452	53,510	55,651	57,877	60,192	74,029	593,454
Real Foreign Cash Flow	28,848	28,848	28,848	28,848	28,848	28,848	28,848	28,848	34,115	321,692
Foreign Real Return on Equity										

Page 215

1089

SIBERIAN GAS PROCESSING PLANT
Data and Key Results

TIMING DATA

Cost Estimate Month	Oct 93	First, Last Operation Month	Jan 96	Dec 15
Financial Closing Month	Jan 95	Economic Life	20.00	

ENGINEERING DATA

	1994	1995	1996	1997	1998	1999	2000	2001
Rated Capacity (BCM/yr)in 1996, 1998	2.14	4.28						
Stream Factor		-	100%	100%	100%	100%	100%	100%
Operations Partial Year Factor	-	-	1.000	1.000	1.000	100%	100%	100%
Wet Gas Processed (MCM)	-	-	2.14	2.14	4.28	4.28	4.28	4.28
Dry Gas Production (BCM)	-	-	1.80	1.91	3.76	3.76	3.76	3.76
NGL Production (MMTons)	-	-	0.36	0.49	1.07	1.07	1.07	1.07

REVENUE DATA (1996 $'s)

NGL Domestic Price ($/Ton)	67.86	Domestic Gas Price ($/MCM)	17.09
NGL Export Price ($/Ton)	144.00	Export Gas Price ($/MCM)	90.00
% NGL for Export	100%	% Dry Gas for Export	100%

OPERATING COST DATA (1993 $000's)

Wet Gas Feedstock Cost ($/MCM)	-	
Chemicals Cost	382	
Utility Cost	19,432	
Maintenance Cost	985	
Labor Cost, Benefits	1,364	518
Other Expenses	10,134	

TRANSPORT COSTS (1996 $'s)

	DOM	EXP
Dry Gas In-Russia Costs ($/MCM)	-	40.00
Dry Gas Export Costs		32.00
NGL In-Russia Costs ($/Ton)	1.94	36.55
NGL Pipeline Costs	32.64	32.64
NGL Port Loading Charge		1.62
NGL Shipping Cost		15.10

CAPITAL COST DATA (1993 $000's)

	1995	1996	1997	Total
Gubkinsky GPP Expansion	43,700	157,500	90,300	291,500
Tarasovsky Gas Processing Plant	-	-	-	-
Gas Gathering Systems Cost	17,900	53,700	40,200	111,800
Metering Facilities Cost	440	1,290	970	2,700
Contributed Assets	9,840	20,906	9,423	40,169
Other Owners Costs	8,000	-	-	8,000
Infrastructure Costs	9,306	31,874	19,721	60,900
Initial Working Capital	2,839	-	-	2,839
Capital Costs	92,025	265,269	160,614	517,908

WORKING CAPITAL DATA

Days Receivables	45
Days Payables	45

FINANCING DATA

	WB/Other Loan	
% of Permanent Financing	70%	
Loan Amount, Commitment	418,240	418,240
Loan Interest Rate	8.15%	
Start of Repayment, Repayment Period	Jan 98	9.0
Commitment Fees %	0.25%	
Upfront Fee %	-	
Other Fin Fees & Close Costs (%, Amt)	-	

KEY RESULTS SUMMARY

Real Return on Investment (no taxes)	17.1%
Unleveraged Payback (Yrs)	4.3
Nominal NPV (Oct '93) @ 15.0%	128,849
Real Return on Equity	16.2%
Leveraged Payback (Yrs)	5.2
Nominal NPV (Oct '93) @ 15.0%	60,289
Min Debt Service Coverage	131%
Average Debt Service Coverage	168%

FINANCING DATA (cont'd)

	Actual
Required Reserves (1st Operating Yr)	39,092
Cash Flow Dedicated to Reserves	100%
Reinvestment Rate	3.0%

TAX DATA

Tax & Book In Service Month	Jan 96
Profits Tax	32.00%
15% Yr SL Property %	100.0%
Carryforward Years	5
VAT Tax (% of CapEx)	20.0%
Property Tax (% of Fixed Assets)	-
Road Tax (% of Revenues)	0.4%
Dry Gas Export Tariff ('93 $/MCM)	-
NGL Export Tariff ('93 $/Ton)	-

ECONOMIC DATA

Global Inflation Rate	2.8% **
Capital Cost Esc Rate	2.8%
O&M Esc Rate	2.8%
Export Gas Price Esc Rate	2.8%
Domestic Gas Price Esc Rate	2.8%
Export NGL Price Esc Rate	2.8%
Domestic NGL Price Esc Rate	2.8%

** Until 2000, 4% thereafter
(all escalation equivalent to inflation)

SENSITIVITY ANALYSIS FACTORS

O&M Cost	1.00
Gas Price	1.00
NGL Price	1.00
Capital Cost	1.00
Transport Cost	1.00
Wet Gas Price	1.00

SIBERIAN GAS PROCESSING PLANT
Annual Sources and Uses of Funds During Construction

($US Thousands)

	1995	1996	1997	Total	%
SOURCES OF FUNDS					
World Bank/Other Loan	68,882	206,802	142,555	418,240	70%
SIBNG Cash Equity	-	-	-	-	-
PNG Cash Equity	-	-	-	-	-
Gasprom Cash Equity	4,920	10,453	4,711	20,084	3%
SIBNG Equity	4,920	10,453	4,711	20,084	3%
PNG Equity	4,920	10,453	4,711	20,084	3%
Foreign Equity	14,760	31,359	14,134	60,253	10%
JV Operating Cash Flow	-	25,912	32,826	58,739	10%
Total Sources of Funds	98,403	295,432	203,650	597,485	100%
USES OF FUNDS					
Gubkinsky GPP Expansion	45,950	169,606	99,266	314,821	
Tarasovsky Gas Processing Plant	-	-	-	-	
Gas Gathering Systems Cost	18,820	57,765	44,281	120,866	
Metering Facilities Costs	463	1,388	1,068	2,919	
Infrastructure Costs	9,785	34,314	21,692	65,791	
Contributed Assets	9,840	20,906	9,423	40,169	
Other Owners Costs	8,281	-	-	8,281	
Initial Working Capital	3,000	-	-	3,000	
Capital Costs	96,138	283,977	175,731	555,847	93%
Other Loan Interest	1,260	10,749	27,751	39,760	
Other Loan Commitment Fees	1,005	705	169	1,879	
Upfront Fees	-	-	-	-	
Financing Costs	2,265	11,455	27,919	41,639	7%
Total Uses of Funds	98,403	295,432	203,650	597,485	100%

	$	%
Total Debt	418,240	70%
Operating Cash	58,739	10%
Equity Requirement	120,507	20%
	597,485	100%

MEMORANDA	WB/Other Loan	
Loan Draws, Amount	418,240	
Standby Facility	-	
Constr Loan Draws + Standby, Commitment	418,240	418,240
Constr Loan Int Rate	8.15%	
Commitment Fee Rate	0.25%	
Upfront Fee Rate	-	
Other Financing Fees (%, Amt)	-	
Repayment Period	9.0	

** NOTE: ANNUAL SANDU STATEMENT IS FOR PRESENTATION ONLY. VALUES ARE FROM QUARTERLY CALCULATIONS.

VAT TAX FUNDING	1995	1996	1997	Total
VAT Tax	15,003	52,614	33,262	100,879
VAT Recovery Expressed in $'s	435	8,945	30,692	40,072
Net VAT Payment	14,569	43,669	2,570	60,807
PNG Cash Equity for VAT	2,428	7,278	428	10,135
SNGP Cash Equity for VAT	2,428	7,278	428	10,135
Gasprom Cash Equity for VAT	2,428	7,278	428	10,135
Foreign Equity for VAT	7,284	21,834	1,285	30,404
Cash Equity for VAT	14,569	43,669	2,570	60,807

Equity Requirement	120,507
Equity for VAT	60,807
Total Equity	181,314

1806

217

SIBERIAN GAS PROCESSING PLANT
Equity Returns

(Thousands)

	1994	1995	1996	1997	1998	1999	2000	2001	2002	2003	2004	2005	2006
EQUITY INVESTMENT													
SNGP Equity	-	7,348	17,731	5,140	-	-	-	-	-	-	-	-	-
PNG Equity	-	7,348	17,731	5,140	-	-	-	-	-	-	-	-	-
Gasprom Equity	-	7,348	17,731	5,140	-	-	-	-	-	-	-	-	-
Foreign Equity	-	22,045	53,193	15,419	-	-	-	-	-	-	-	-	-
Additional Equity	-	-	-	-	-	-	-	-	-	-	-	-	-
Total Equity	-	44,090	106,386	30,839	-	-	-	-	-	-	-	-	-
CUMULATIVE EQUITY INVESTMENT													
SNGP Equity Holdings	-	7,348	25,079	30,219	30,219	30,219	30,219	30,219	30,219	30,219	30,219	30,219	30,219
PNG Equity Holdings	-	7,348	25,079	30,219	30,219	30,219	30,219	30,219	30,219	30,219	30,219	30,219	30,219
Gasprom Equity Holdings	-	7,348	25,079	30,219	30,219	30,219	30,219	30,219	30,219	30,219	30,219	30,219	30,219
Foreign Equity Holdings	-	22,045	75,238	90,657	90,657	90,657	90,657	90,657	90,657	90,657	90,657	90,657	90,657
CS Equity Position	-	44,090	150,476	181,314	181,314	181,314	181,314	181,314	181,314	181,314	181,314	181,314	181,314
PROJECT RETURN ON EQUITY													
CS Dividends	-	-	-	-	-	36,981	45,317	42,253	48,412	53,685	49,355	36,419	64,811
Less: Equity Investment	-	44,090	106,386	30,839	-	-	-	-	-	-	-	-	-
Net Cash Flow	-	(44,090)	(106,386)	(30,839)	-	36,981	45,317	42,253	48,412	53,685	49,355	36,419	64,811
Cumulative	-	(44,090)	(150,476)	(181,314)	(181,314)	(144,333)	(99,016)	(56,762)	(8,350)	45,335	94,690	131,109	195,921
Real Net Cash Flow	-	(42,010)	(98,606)	(27,805)	-	31,552	37,611	33,719	37,148	39,609	35,014	24,843	42,511
Real Return on Equity	16.2%												

SIBERIAN GAS PROCESSING PLANT
Equity Returns

(Thousands)

	1994	1995	1996	1997	1998	1999	2000	2001	2002	2003	2004	2005	2006
SNGP RETURNS													
SNGP Share of Common Stock		17%	17%	17%	17%	17%	17%	17%	17%	17%	17%	17%	17%
CS Dividends	-	-	-	-	-	36,981	45,317	42,253	48,412	53,685	49,355	36,419	64,811
SNGP CS Dividends		-	-	-	-	6,164	7,553	7,042	8,069	8,947	8,226	6,070	10,802
SNGP CS Dividends		-	-	-	-	6,164	7,553	7,042	8,069	8,947	8,226	6,070	10,802
Plus: SNGP NGL Pipeline Marginal Profit	-	-	-	-	-	-	-	-	-	-	-	-	-
Less: SNGP Equity	-	7,348	17,731	5,140	-	-	-	-	-	-	-	-	-
SNGP Net Cash Flow	-	(7,348)	(17,731)	(5,140)	-	6,164	7,553	7,042	8,069	8,947	8,226	6,070	10,802
Real SNGP Net Cash Flow	-	(7,002)	(16,434)	(4,634)	-	5,259	6,268	5,620	6,191	6,602	5,836	4,141	7,085
SNGP Real Return on Equity	16.2%												
PNG RETURNS													
PNG Share of Common Stock		17%	17%	17%	17%	17%	17%	17%	17%	17%	17%	17%	17%
CS Dividends	-	-	-	-	-	36,981	45,317	42,253	48,412	53,685	49,355	36,419	64,811
PNG CS Dividends		-	-	-	-	6,164	7,553	7,042	8,069	8,947	8,226	6,070	10,802
PNG CS Dividends		-	-	-	-	6,164	7,553	7,042	8,069	8,947	8,226	6,070	10,802
Plus: PNG Wet Gas Marginal Profit	-	-	-	-	-	-	-	-	-	-	-	-	-
Less: PNG Equity	-	7,348	17,731	5,140	-	-	-	-	-	-	-	-	-
PNG Net Cash Flow	-	(7,348)	(17,731)	(5,140)	-	6,164	7,553	7,042	8,069	8,947	8,226	6,070	10,802
Real PNG Net Cash Flow	-	(7,002)	(16,434)	(4,634)	-	5,259	6,268	5,620	6,191	6,602	5,836	4,141	7,085
PNG Real Return on Equity	16.2%												
GASPROM RETURNS													
Gasprom Share of Common Stock		17%	17%	17%	17%	17%	17%	17%	17%	17%	17%	17%	17%
CS Dividends	-	-	-	-	-	36,981	45,317	42,253	48,412	53,685	49,355	36,419	64,811
Gasprom CS Dividends		-	-	-	-	6,164	7,553	7,042	8,069	8,947	8,226	6,070	10,802
Gasprom CS Dividends		-	-	-	-	6,164	7,553	7,042	8,069	8,947	8,226	6,070	10,802
Plus: Gasprom Transport Marginal Profit	-	-	-	-	-	-	-	-	-	-	-	-	-
Less: Gasprom Equity	-	7,348	17,731	5,140	-	-	-	-	-	-	-	-	-
Gasprom Net Cash Flow	-	(7,348)	(17,731)	(5,140)	-	6,164	7,553	7,042	8,069	8,947	8,226	6,070	10,802
Real Gasprom Net Cash Flow	-	(7,002)	(16,434)	(4,634)	-	5,259	6,268	5,620	6,191	6,602	5,836	4,141	7,085
Gasprom Real Return on Equity	16.2%												
FOREIGN INVESTOR RETURNS													
Foreign Share of Common Stock		50%	50%	50%	50%	50%	50%	50%	50%	50%	50%	50%	50%
CS Dividends	-	-	-	-	-	36,981	45,317	42,253	48,412	53,685	49,355	36,419	64,811
Foreign CS Dividends		-	-	-	-	18,491	22,659	21,127	24,206	26,842	24,678	18,210	32,406
Foreign CS Dividends		-	-	-	-	18,491	22,659	21,127	24,206	26,842	24,678	18,210	32,406
Less: Foreign Equity	-	22,045	53,193	15,419	-	-	-	-	-	-	-	-	-
Less: Additional Equity Investment	-	-	-	-	-	-	-	-	-	-	-	-	-
Foreign Net Cash Flow	-	(22,045)	(53,193)	(15,419)	-	18,491	22,659	21,127	24,206	26,842	24,678	18,210	32,406
Real Foreign Cash Flow	-	(21,005)	(49,303)	(13,902)	-	15,776	18,805	16,860	18,574	19,805	17,507	12,422	21,255
Foreign Real Return on Equity	16.2%												

REVISED CASE 1B.1: Wet Gas = $0; Ex; Tax; NGL Pipeline Tariff @ -25%

SIBERIAN GAS PROCESSING PLANT
Equity Returns

(Thousands)

	2007	2008	2009	2010	2011	2012	2013	2014	2015	Total
EQUITY INVESTMENT										
SNGP Equity	-	-	-	-	-	-	-	-	-	30,219
PNG Equity	-	-	-	-	-	-	-	-	-	30,219
Gasprom Equity	-	-	-	-	-	-	-	-	-	30,219
Foreign Equity	-	-	-	-	-	-	-	-	-	90,657
Additional Equity	-	-	-	-	-	-	-	-	-	-
Total Equity	-	-	-	-	-	-	-	-	-	181,314
CUMULATIVE EQUITY INVESTMENT										
SNGP Equity Holdings	30,219	30,219	30,219	30,219	30,219	30,219	30,219	30,219	30,219	
PNG Equity Holdings	30,219	30,219	30,219	30,219	30,219	30,219	30,219	30,219	30,219	
Gasprom Equity Holdings	30,219	30,219	30,219	30,219	30,219	30,219	30,219	30,219	30,219	
Foreign Equity Holdings	90,657	90,657	90,657	90,657	90,657	90,657	90,657	90,657	90,657	
CS Equity Position	181,314	181,314	181,314	181,314	181,314	181,314	181,314	181,314	181,314	
PROJECT RETURN ON EQUITY										
CS Dividends	91,481	95,141	98,946	102,904	107,020	111,301	115,753	120,383	148,057	1,368,223
Less: Equity Investment	-	-	-	-	-	-	-	-	-	181,314
Net Cash Flow	91,481	95,141	98,946	102,904	107,020	111,301	115,753	120,383	148,057	1,186,908
Cumulative	287,402	382,543	481,489	584,393	691,413	802,715	918,468	1,038,851	1,186,908	
Real Net Cash Flow	57,696	57,696	57,696	57,696	57,696	57,696	57,696	57,696	68,230	643,385
Real Return on Equity										

SIBERIAN GAS PROCESSING PLANT
Equity Returns
(Thousands)

	2007	2008	2009	2010	2011	2012	2013	2014	2015	Total
SNGP RETURNS										
SNGP Share of Common Stock	17%	17%	17%	17%	17%	17%	17%	17%	17%	
CS Dividends	91,481	95,141	98,946	102,904	107,020	111,301	115,753	120,383	148,057	1,368,223
SNGP CS Dividends	15,247	15,857	16,491	17,151	17,837	18,550	19,292	20,064	24,676	228,037
SNGP CS Dividends	15,247	15,857	16,491	17,151	17,837	18,550	19,292	20,064	24,676	228,037
Plus: SNGP NGL Pipeline Marginal Profit	-	-	-	-	-	-	-	-	-	-
Less: SNGP Equity	-	-	-	-	-	-	-	-	-	30,219
SNGP Net Cash Flow	15,247	15,857	16,491	17,151	17,837	18,550	19,292	20,064	24,676	197,818
Real SNGP Net Cash Flow	9,616	9,616	9,616	9,616	9,616	9,616	9,616	9,616	11,372	107,231
SNGP Real Return on Equity										
PNG RETURNS										
PNG Share of Common Stock	17%	17%	17%	17%	17%	17%	17%	17%	17%	
CS Dividends	91,481	95,141	98,946	102,904	107,020	111,301	115,753	120,383	148,057	1,368,223
PNG CS Dividends	15,247	15,857	16,491	17,151	17,837	18,550	19,292	20,064	24,676	228,037
PNG CS Dividends	15,247	15,857	16,491	17,151	17,837	18,550	19,292	20,064	24,676	228,037
Plus: PNG Wet Gas Marginal Profit	-	-	-	-	-	-	-	-	-	-
Less: PNG Equity	-	-	-	-	-	-	-	-	-	30,219
PNG Net Cash Flow	15,247	15,857	16,491	17,151	17,837	18,550	19,292	20,064	24,676	197,818
Real PNG Net Cash Flow	9,616	9,616	9,616	9,616	9,616	9,616	9,616	9,616	11,372	107,231
PNG Real Return on Equity										
GASPROM RETURNS										
Gasprom Share of Common Stock	17%	17%	17%	17%	17%	17%	17%	17%	17%	
CS Dividends	91,481	95,141	98,946	102,904	107,020	111,301	115,753	120,383	148,057	1,368,223
Gasprom CS Dividends	15,247	15,857	16,491	17,151	17,837	18,550	19,292	20,064	24,676	228,037
Gasprom CS Dividends	15,247	15,857	16,491	17,151	17,837	18,550	19,292	20,064	24,676	228,037
Plus: Gasprom Transport Marginal Profit	-	-	-	-	-	-	-	-	-	-
Less: Gasprom Equity	-	-	-	-	-	-	-	-	-	30,219
Gasprom Net Cash Flow	15,247	15,857	16,491	17,151	17,837	18,550	19,292	20,064	24,676	197,818
Real Gasprom Net Cash Flow	9,616	9,616	9,616	9,616	9,616	9,616	9,616	9,616	11,372	107,231
Gasprom Real Return on Equity										
FOREIGN INVESTOR RETURNS										
Foreign Share of Common Stock	50%	50%	50%	50%	50%	50%	50%	50%	50%	
CS Dividends	91,481	95,141	98,946	102,904	107,020	111,301	115,753	120,383	148,057	1,368,223
Foreign CS Dividends	45,741	47,570	49,473	51,452	53,510	55,651	57,877	60,192	74,029	684,111
Foreign CS Dividends	45,741	47,570	49,473	51,452	53,510	55,651	57,877	60,192	74,029	684,111
Less: Foreign Equity	-	-	-	-	-	-	-	-	-	90,657
Less: Additional Equity Investment	-	-	-	-	-	-	-	-	-	-
Foreign Net Cash Flow	45,741	47,570	49,473	51,452	53,510	55,651	57,877	60,192	74,029	593,454
Real Foreign Cash Flow	28,848	28,848	28,848	28,848	28,848	28,848	28,848	28,848	34,115	321,692
Foreign Real Return on Equity										

SIBERIAN GAS PROCESSING PLANT
Data and Key Results

TIMING DATA

Cost Estimate Month	Oct 93	First, Last Operation Month	Jan 96 Dec 15
Financial Closing Month	Jan 95	Economic Life	20.00

ENGINEERING DATA

	1994	1995	1996	1997	1998	1999	2000	2001
Rated Capacity (BCM/yr)in 1996, 1998	2.14	4.28						
Stream Factor		-	100%	100%	100%	100%	100%	100%
Operations Partial Year Factor	-	-	1.000	1.000	1.000	100%	100%	100%
Wet Gas Processed (MCM)	-	-	2.14	2.14	4.28	4.28	4.28	4.28
Dry Gas Production (BCM)	-	-	1.80	1.91	3.76	3.76	3.76	3.76
NGL Production (MMTons)	-	-	0.36	0.49	1.07	1.07	1.07	1.07

REVENUE DATA (1996 $'s)

NGL Domestic Price ($/Ton)	67.86	Domestic Gas Price ($/MCM)	17.09
NGL Export Price ($/Ton)	144.00	Export Gas Price ($/MCM)	90.00
% NGL for Export	100%	% Dry Gas for Export	100%

OPERATING COST DATA (1993 $000's)

Wet Gas Feedstock Cost ($/MCM)	-	
Chemicals Cost	382	
Utility Cost	19,432	
Maintenance Cost	985	
Labor Cost, Benefits	1,364	518
Other Expenses	10,134	

TRANSPORT COSTS (1996 $'s)

	DOM	EXP
Dry Gas In-Russia Costs ($/MCM)	-	40.00
Dry Gas Export Costs		32.00
NGL In-Russia Costs ($/Ton)	1.94	36.55
NGL Pipeline Costs	21.76	21.76
NGL Port Loading Charge		1.62
NGL Shipping Cost		15.10

CAPITAL COST DATA (1993 $000's)

	1995	1996	1997	Total
Gubkinsky GPP Expansion	43,700	157,500	90,300	291,500
Tarasovsky Gas Processing Plant	-	-	-	-
Gas Gathering Systems Cost	17,900	53,700	40,200	111,800
Metering Facilities Cost	440	1,290	970	2,700
Contributed Assets	9,840	20,107	8,120	38,067
Other Owners Costs	8,000	-	-	8,000
Infrastructure Costs	9,306	31,874	19,721	60,900
Initial Working Capital	2,839	-	-	2,839
Capital Costs	92,025	264,471	159,310	515,805

WORKING CAPITAL DATA

Days Receivables	45
Days Payables	45

FINANCING DATA

	WB/Other	Loan
% of Permanent Financing	70%	
Loan Amount, Commitment	416,698	416,698
Loan Interest Rate	8.15%	
Start of Repayment, Repayment Period	Jan 98	9.0
Commitment Fees %	0.25%	
Upfront Fee %	-	
Other Fin Fees & [illegible] Costs (%, Amt)	-	

222

KEY RESULTS SUMMARY

Real Return on Investment (no taxes)	19.5%
Unleveraged Payback (Yrs)	3.8
Nominal NPV (Oct '93) @ 15.0%	183,835
Real Return on Equity	19.8%
Leveraged Payback (Yrs)	4.0
Nominal NPV (Oct '93) @ 15.0%	101,797
Min Debt Service Coverage	146%
Average Debt Service Coverage	185%

FINANCING DATA (cont'd)

	Actual
Required Reserves (1st Operating Yr)	38,948
Cash Flow Dedicated to Reserves	100%
Reinvestment Rate	3.0%

TAX DATA

Tax & Book In Service Month	Jan 96
Profits Tax	32.00%
15% Yr SL Property %	100.0%
Carryforward Years	5
VAT Tax (% of CapEx)	20.0%
Property Tax (% of Fixed Assets)	-
Road Tax (% of Revenues)	0.4%
Dry Gas Export Tariff ('93 $/MCM)	-
NGL Export Tariff ('93 $/Ton)	-

ECONOMIC DATA

Global Inflation Rate	2.8% **
Capital Cost Esc Rate	2.8%
O&M Esc Rate	2.8%
Export Gas Price Esc Rate	2.8%
Domestic Gas Price Esc Rate	2.8%
Export NGL Price Esc Rate	2.8%
Domestic NGL Price Esc Rate	2.8%

** Until 2000, 4% thereafter
(all escalation equivalent to inflation)

SENSITIVITY ANALYSIS FACTORS

O&M Cost	1.00
Gas Price	1.00
NGL Price	1.00
Capital Cost	1.00
Transport Cost	1.00
Wet Gas Price	1.00

SIBERIAN GAS PROCESSING PLANT
Annual Sources and Uses of Funds During Construction

($US Thousands)

	1995	1996	1997	Total	%
SOURCES OF FUNDS					
World Bank/Other Loan	68,879	206,229	141,590	416,698	70%
SIBNG Cash Equity	-	-	-	-	-
PNG Cash Equity	-	-	-	-	-
Gasprom Cash Equity	4,920	10,054	4,060	19,033	3%
SIBNG Equity	4,920	10,054	4,060	19,033	3%
PNG Equity	4,920	10,054	4,060	19,033	3%
Foreign Equity	14,760	30,161	12,179	57,100	10%
JV Operating Cash Flow	-	28,063	36,323	64,385	11%
Total Sources of Funds	98,399	294,613	202,271	595,283	100%
USES OF FUNDS					
Gubkinsky GPP Expansion	45,950	169,606	99,266	314,821	
Tarasovsky Gas Processing Plant	-	-	-	-	
Gas Gathering Systems Cost	18,820	57,765	44,281	120,866	
Metering Facilities Costs	463	1,388	1,068	2,919	
Infrastructure Costs	9,785	34,314	21,692	65,791	
Contributed Assets	9,840	20,107	8,120	38,067	
Other Owners Costs	8,281	-	-	8,281	
Initial Working Capital	3,000	-	-	3,000	
Capital Costs	96,138	283,179	174,428	553,744	93%
Other Loan Interest	1,260	10,732	27,677	39,669	
Other Loan Commitment Fees	1,001	702	167	1,870	
Upfront Fees	-	-	-	-	
Financing Costs	2,261	11,434	27,844	41,539	7%
Total Uses of Funds	98,399	294,613	202,271	595,283	100%

	$	%
Total Debt	416,698	70%
Operating Cash	64,385	11%
Equity Requirement	114,200	19%
	595,283	100%

MEMORANDA	WB/Other Loan	
Loan Draws, Amount	416,698	
Standby Facility	-	
Constr Loan Draws + Standby, Commitment	416,698	416,698
Constr Loan Int Rate	8.15%	
Commitment Fee Rate	0.25%	
Upfront Fee Rate	-	
Other Financing Fees (%, Amt)	-	
Repayment Period	9.0	

** NOTE: ANNUAL SANDU STATEMENT IS FOR PRESENTATION ONLY. VALUES ARE FROM QUARTERLY CALCULATIONS.

VAT TAX FUNDING				
VAT Tax	15,003	52,614	33,262	100,879
VAT Recovery Expressed in $'s	435	8,945	30,692	40,072
Net VAT Payment	14,569	43,669	2,570	60,807
PNG Cash Equity for VAT	2,428	7,278	428	10,135
SNGP Cash Equity for VAT	2,428	7,278	428	10,135
Gasprom Cash Equity for VAT	2,428	7,278	428	10,135
Foreign Equity for VAT	7,284	21,834	1,285	30,404
Cash Equity for VAT	14,569	43,669	2,570	60,807

Equity Requirement	114,200
Equity for VAT	60,807
Total Equity	175,007

1481

REVISED CASE 1B.1: Wet Gas = $0; Expected Tax; NGL Pipeline Tariff @ -50%

SIBERIAN GAS PROCESSING PLANT
Equity Returns

(Thousands)

	1994	1995	1996	1997	1998	1999	2000	2001	2002	2003	2004	2005	2006
EQUITY INVESTMENT													
SNGP Equity	-	7,348	17,332	4,488	-	-	-	-	-	-	-	-	-
PNG Equity	-	7,348	17,332	4,488	-	-	-	-	-	-	-	-	-
Gasprom Equity	-	7,348	17,332	4,488	-	-	-	-	-	-	-	-	-
Foreign Equity	-	22,044	51,995	13,464	-	-	-	-	-	-	-	-	-
Additional Equity	-	-	-	-	-	-	-	-	-	-	-	-	-
Total Equity	-	44,088	103,990	26,929	-	-	-	-	-	-	-	-	-
CUMULATIVE EQUITY INVESTMENT													
SNGP Equity Holdings	-	7,348	24,680	29,168	29,168	29,168	29,168	29,168	29,168	29,168	29,168	29,168	29,168
PNG Equity Holdings	-	7,348	24,680	29,168	29,168	29,168	29,168	29,168	29,168	29,168	29,168	29,168	29,168
Gasprom Equity Holdings	-	7,348	24,680	29,168	29,168	29,168	29,168	29,168	29,168	29,168	29,168	29,168	29,168
Foreign Equity Holdings	-	22,044	74,039	87,504	87,504	87,504	87,504	87,504	87,504	87,504	87,504	87,504	87,504
CS Equity Position	-	44,088	148,078	175,007	175,007	175,007	175,007	175,007	175,007	175,007	175,007	175,007	175,007
PROJECT RETURN ON EQUITY													
CS Dividends	-	-	-	-	-	61,977	57,851	53,952	58,085	59,097	57,086	47,229	75,954
Less: Equity Investment	-	44,088	103,990	26,929	-	-	-	-	-	-	-	-	-
Net Cash Flow	-	(44,088)	(103,990)	(26,929)	-	61,977	57,851	53,952	58,085	59,097	57,086	47,229	75,954
Cumulative	-	(44,088)	(148,078)	(175,007)	(175,007)	(113,030)	(55,179)	(1,226)	56,859	115,956	173,042	220,270	296,224
Real Net Cash Flow	-	(42,008)	(96,385)	(24,279)	-	52,878	48,013	43,055	44,570	43,603	40,499	32,217	49,819
Real Return on Equity	19.8%												

SIBERIAN GAS PROCESSING PLANT
Equity Returns

(Thousands)

	1994	1995	1996	1997	1998	1999	2000	2001	2002	2003	2004	2005	2006
SNGP RETURNS													
SNGP Share of Common Stock		17%	17%	17%	17%	17%	17%	17%	17%	17%	17%	17%	17%
CS Dividends	-	-	-	-	-	61,977	57,851	53,952	58,085	59,097	57,086	47,229	75,954
SNGP CS Dividends		-	-	-	-	10,330	9,642	8,992	9,681	9,850	9,514	7,871	12,659
SNGP CS Dividends		-	-	-	-	10,330	9,642	8,992	9,681	9,850	9,514	7,871	12,659
Plus: SNGP NGL Pipeline Marginal Profit	-	-	-	-	-	-	-	-	-	-	-	-	-
Less: SNGP Equity	-	7,348	17,332	4,488	-	-	-	-	-	-	-	-	-
SNGP Net Cash Flow	-	(7,348)	(17,332)	(4,488)	-	10,330	9,642	8,992	9,681	9,850	9,514	7,871	12,659
Real SNGP Net Cash Flow	-	(7,001)	(16,064)	(4,047)	-	8,813	8,002	7,176	7,428	7,267	6,750	5,370	8,303
SNGP Real Return on Equity	19.8%												
PNG RETURNS													
PNG Share of Common Stock		17%	17%	17%	17%	17%	17%	17%	17%	17%	17%	17%	17%
CS Dividends	-	-	-	-	-	61,977	57,851	53,952	58,085	59,097	57,086	47,229	75,954
PNG CS Dividends		-	-	-	-	10,330	9,642	8,992	9,681	9,850	9,514	7,871	12,659
PNG CS Dividends		-	-	-	-	10,330	9,642	8,992	9,681	9,850	9,514	7,871	12,659
Plus: PNG Wet Gas Marginal Profit	-	-	-	-	-	-	-	-	-	-	-	-	-
Less: PNG Equity	-	7,348	17,332	4,488	-	-	-	-	-	-	-	-	-
PNG Net Cash Flow	-	(7,348)	(17,332)	(4,488)	-	10,330	9,642	8,992	9,681	9,850	9,514	7,871	12,659
Real PNG Net Cash Flow	-	(7,001)	(16,064)	(4,047)	-	8,813	8,002	7,176	7,428	7,267	6,750	5,370	8,303
PNG Real Return on Equity	19.8%												
GASPROM RETURNS													
Gasprom Share of Common Stock		17%	17%	17%	17%	17%	17%	17%	17%	17%	17%	17%	17%
CS Dividends	-	-	-	-	-	61,977	57,851	53,952	58,085	59,097	57,086	47,229	75,954
Gasprom CS Dividends		-	-	-	-	10,330	9,642	8,992	9,681	9,850	9,514	7,871	12,659
Gasprom CS Dividends		-	-	-	-	10,330	9,642	8,992	9,681	9,850	9,514	7,871	12,659
Plus: Gasprom Transport Marginal Profit	-	-	-	-	-	-	-	-	-	-	-	-	-
Less: Gasprom Equity	-	7,348	17,332	4,488	-	-	-	-	-	-	-	-	-
Gasprom Net Cash Flow	-	(7,348)	(17,332)	(4,488)	-	10,330	9,642	8,992	9,681	9,850	9,514	7,871	12,659
Real Gasprom Net Cash Flow	-	(7,001)	(16,064)	(4,047)	-	8,813	8,002	7,176	7,428	7,267	6,750	5,370	8,303
Gasprom Real Return on Equity	19.8%												
FOREIGN INVESTOR RETURNS													
Foreign Share of Common Stock		50%	50%	50%	50%	50%	50%	50%	50%	50%	50%	50%	50%
CS Dividends	-	-	-	-	-	61,977	57,851	53,952	58,085	59,097	57,086	47,229	75,954
Foreign CS Dividends		-	-	-	-	30,989	28,926	26,976	29,043	29,549	28,543	23,614	37,977
Foreign CS Dividends		-	-	-	-	30,989	28,926	26,976	29,043	29,549	28,543	23,614	37,977
Less: Foreign Equity	-	22,044	51,995	13,464	-	-	-	-	-	-	-	-	-
Less: Additional Equity Investment	-	-	-	-	-	-	-	-	-	-	-	-	-
Foreign Net Cash Flow	-	(22,044)	(51,995)	(13,464)	-	30,989	28,926	26,976	29,043	29,549	28,543	23,614	37,977
Real Foreign Cash Flow	-	(21,004)	(48,193)	(12,140)	-	26,439	24,007	21,528	22,285	21,801	20,249	16,109	24,910
Foreign Real Return on Equity	19.8%												

REVISED CASE 1B.1: Wet Gas = $0; Expected Tax; NGL Pipeline Tariff @ -50%

SIBERIAN GAS PROCESSING PLANT
Equity Returns

(Thousands)

	2007	2008	2009	2010	2011	2012	2013	2014	2015	Total
EQUITY INVESTMENT										
SNGP Equity	-	-	-	-	-	-	-	-	-	29,168
PNG Equity	-	-	-	-	-	-	-	-	-	29,168
Gasprom Equity	-	-	-	-	-	-	-	-	-	29,168
Foreign Equity	-	-	-	-	-	-	-	-	-	87,504
Additional Equity	-	-	-	-	-	-	-	-	-	-
Total Equity	-	-	-	-	-	-	-	-	-	175,007
CUMULATIVE EQUITY INVESTMENT										
SNGP Equity Holdings	29,168	29,168	29,168	29,168	29,168	29,168	29,168	29,168	29,168	
PNG Equity Holdings	29,168	29,168	29,168	29,168	29,168	29,168	29,168	29,168	29,168	
Gasprom Equity Holdings	29,168	29,168	29,168	29,168	29,168	29,168	29,168	29,168	29,168	
Foreign Equity Holdings	87,504	87,504	87,504	87,504	87,504	87,504	87,504	87,504	87,504	
CS Equity Position	175,007	175,007	175,007	175,007	175,007	175,007	175,007	175,007	175,007	
PROJECT RETURN ON EQUITY										
CS Dividends	102,981	107,100	111,384	115,840	120,473	125,292	130,304	135,516	166,669	1,586,790
Less: Equity Investment	-	-	-	-	-	-	-	-	-	175,007
Net Cash Flow	102,981	107,100	111,384	115,840	120,473	125,292	130,304	135,516	166,669	1,411,783
Cumulative	399,205	506,305	617,690	733,529	854,003	979,295	1,109,599	1,245,114	1,411,783	
Real Net Cash Flow	64,949	64,949	64,949	64,949	64,949	64,949	64,949	64,949	76,807	788,376
Real Return on Equity										

SIBERIAN GAS PROCESSING PLANT
Equity Returns

(Thousands)

	2007	2008	2009	2010	2011	2012	2013	2014	2015	Total
SNGP RETURNS										
SNGP Share of Common Stock	17%	17%	17%	17%	17%	17%	17%	17%	17%	
CS Dividends	102,981	107,100	111,384	115,840	120,473	125,292	130,304	135,516	166,669	1,586,790
SNGP CS Dividends	17,164	17,850	18,564	19,307	20,079	20,882	21,717	22,586	27,778	264,465
SNGP CS Dividends	17,164	17,850	18,564	19,307	20,079	20,882	21,717	22,586	27,778	264,465
Plus: SNGP NGL Pipeline Marginal Profit	-	-	-	-	-	-	-	-	-	-
Less: SNGP Equity	-	-	-	-	-	-	-	-	-	29,168
SNGP Net Cash Flow	17,164	17,850	18,564	19,307	20,079	20,882	21,717	22,586	27,778	235,297
Real SNGP Net Cash Flow	10,825	10,825	10,825	10,825	10,825	10,825	10,825	10,825	12,801	131,396
SNGP Real Return on Equity										
PNG RETURNS										
PNG Share of Common Stock	17%	17%	17%	17%	17%	17%	17%	17%	17%	
CS Dividends	102,981	107,100	111,384	115,840	120,473	125,292	130,304	135,516	166,669	1,586,790
PNG CS Dividends	17,164	17,850	18,564	19,307	20,079	20,882	21,717	22,586	27,778	264,465
PNG CS Dividends	17,164	17,850	18,564	19,307	20,079	20,882	21,717	22,586	27,778	264,465
Plus: PNG Wet Gas Marginal Profit	-	-	-	-	-	-	-	-	-	-
Less: PNG Equity	-	-	-	-	-	-	-	-	-	29,168
PNG Net Cash Flow	17,164	17,850	18,564	19,307	20,079	20,882	21,717	22,586	27,778	235,297
Real PNG Net Cash Flow	10,825	10,825	10,825	10,825	10,825	10,825	10,825	10,825	12,801	131,396
PNG Real Return on Equity										
GASPROM RETURNS										
Gasprom Share of Common Stock	17%	17%	17%	17%	17%	17%	17%	17%	17%	
CS Dividends	102,981	107,100	111,384	115,840	120,473	125,292	130,304	135,516	166,669	1,586,790
Gasprom CS Dividends	17,164	17,850	18,564	19,307	20,079	20,882	21,717	22,586	27,778	264,465
Gasprom CS Dividends	17,164	17,850	18,564	19,307	20,079	20,882	21,717	22,586	27,778	264,465
Plus: Gasprom Transport Marginal Profit	-	-	-	-	-	-	-	-	-	-
Less: Gasprom Equity	-	-	-	-	-	-	-	-	-	29,168
Gasprom Net Cash Flow	17,164	17,850	18,564	19,307	20,079	20,882	21,717	22,586	27,778	235,297
Real Gasprom Net Cash Flow	10,825	10,825	10,825	10,825	10,825	10,825	10,825	10,825	12,801	131,396
Gasprom Real Return on Equity										
FOREIGN INVESTOR RETURNS										
Foreign Share of Common Stock	50%	50%	50%	50%	50%	50%	50%	50%	50%	
CS Dividends	102,981	107,100	111,384	115,840	120,473	125,292	130,304	135,516	166,669	1,586,790
Foreign CS Dividends	51,491	53,550	55,692	57,920	60,237	62,646	65,152	67,758	83,334	793,395
Foreign CS Dividends	51,491	53,550	55,692	57,920	60,237	62,646	65,152	67,758	83,334	793,395
Less: Foreign Equity	-	-	-	-	-	-	-	-	-	87,504
Less: Additional Equity Investment	-	-	-	-	-	-	-	-	-	-
Foreign Net Cash Flow	51,491	53,550	55,692	57,920	60,237	62,646	65,152	67,758	83,334	705,892
Real Foreign Cash Flow	32,474	32,474	32,474	32,474	32,474	32,474	32,474	32,474	38,403	394,188
Foreign Real Return on Equity										

SIBERIAN GAS PROCESSING PLANT
Data and Key Results

TIMING DATA

Cost Estimate Month	Oct 93	First, Last Operation Month	Jan 96	Dec 15
Financial Closing Month	Jan 95	Economic Life	20.00	

ENGINEERING DATA

	1994	1995	1996	1997	1998	1999	2000	2001
Rated Capacity (BCM/yr)in 1996, 1998	2.14	4.28						
Stream Factor		-	100%	100%	100%	100%	100%	100%
Operations Partial Year Factor	-	-	1.000	1.000	1.000	100%	100%	100%
Wet Gas Processed (MCM)	-	-	2.14	2.14	4.28	4.28	4.28	4.28
Dry Gas Production (BCM)	-	-	1.80	1.91	3.76	3.76	3.76	3.76
NGL Production (MMTons)	-	-	0.36	0.49	1.07	1.07	1.07	1.07

REVENUE DATA (1996 $'s)

NGL Domestic Price ($/Ton)	67.86	Domestic Gas Price ($/MCM)	17.09
NGL Export Price ($/Ton)	144.00	Export Gas Price ($/MCM)	90.00
% NGL for Export	100%	% Dry Gas for Export	100%

OPERATING COST DATA (1993 $000's)

Wet Gas Feedstock Cost ($/MCM)	-	
Chemicals Cost	382	
Utility Cost	19,432	
Maintenance Cost	985	
Labor Cost, Benefits	1,364	518
Other Expenses	10,134	

TRANSPORT COSTS (1996 $'s)

	DOM	EXP
Dry Gas In-Russia Costs ($/MCM)	-	40.00
Dry Gas Export Costs		32.00
NGL In-Russia Costs ($/Ton)	1.94	36.55
NGL Pipeline Costs	43.52	43.52
NGL Port Loading Charge		1.62
NGL Shipping Cost		15.10

CAPITAL COST DATA (1993 $000's)

	1995	1996	1997	Total
Gubkinsky GPP Expansion	43,700	157,500	90,300	291,500
Tarasovsky Gas Processing Plant	-	-	-	-
Gas Gathering Systems Cost	17,900	53,700	40,200	111,800
Metering Facilities Cost	440	1,290	970	2,700
Contributed Assets	9,841	21,528	10,481	41,850
Other Owners Costs	8,000	-	-	8,000
Infrastructure Costs	9,306	31,874	19,721	60,900
Initial Working Capital	2,839	-	-	2,839
Capital Costs	92,025	265,892	161,672	519,589

WORKING CAPITAL DATA

Days Receivables	45
Days Payables	45

FINANCING DATA

	WB/Other Loan	
% of Permanent Financing	70%	
Loan Amount, Commitment	419,471	419,471
Loan Interest Rate	8.15%	
Start of Repayment, Repayment Period	Jan 98	9.0
Commitment Fees %	0.25%	
Upfront Fee %	-	
Other Fin Fees & [illegible] Costs (%, Amt)	-	

KEY RESULTS SUMMARY

Real Return on Investment (no taxes)		14.7%
Unleveraged Payback (Yrs)		4.9
Nominal NPV (Oct '93) @	15.0%	73,710
Real Return on Equity		16.0%
Leveraged Payback (Yrs)		6.2
Nominal NPV (Oct '93) @	15.0%	48,238
Min Debt Service Coverage		104%
Average Debt Service Coverage		148%

FINANCING DATA (cont'd)

	Actual
Required Reserves (1st Operating Yr)	39,207
Cash Flow Dedicated to Reserves	100%
Reinvestment Rate	3.0%

TAX DATA

Tax & Book In Service Month	Jan 96
Profits Tax	32.00%
15% Yr SL Property %	100.0%
Carryforward Years	5
VAT Tax (% of CapEx)	-
Property Tax (% of Fixed Assets)	-
Road Tax (% of Revenues)	-
Dry Gas Export Tariff ('93 $/MCM)	-
NGL Export Tariff ('93 $/Ton)	-

ECONOMIC DATA

Global Inflation Rate	2.8% **
Capital Cost Esc Rate	2.8%
O&M Esc Rate	2.8%
Export Gas Price Esc Rate	2.8%
Domestic Gas Price Esc Rate	2.8%
Export NGL Price Esc Rate	2.8%
Domestic NGL Price Esc Rate	2.8%

** Until 2000, 4% thereafter
(all escalation equivalent to inflation)

SENSITIVITY ANALYSIS FACTORS

O&M Cost	1.00
Gas Price	1.00
NGL Price	1.00
Capital Cost	1.00
Transport Cost	1.00
Wet Gas Price	1.00

REVISED CASE 1B.1: Wet Gas = $0; Profits Tax only

SIBERIAN GAS PROCESSING PLANT
Annual Sources and Uses of Funds During Construction

($US Thousands)

	1995	1996	1997	Total	%
SOURCES OF FUNDS					
World Bank/Other Loan	68,885	207,249	143,338	419,471	70%
SIBNG Cash Equity	-	-	-	-	-
PNG Cash Equity	-	-	-	-	-
Gasprom Cash Equity	4,920	10,764	5,240	20,925	3%
SIBNG Equity	4,920	10,764	5,240	20,925	3%
PNG Equity	4,920	10,764	5,240	20,925	3%
Foreign Equity	14,761	32,292	15,721	62,774	10%
JV Operating Cash Flow	-	24,237	29,987	54,225	9%
Total Sources of Funds	98,406	296,070	204,768	599,245	100%
USES OF FUNDS					
Gubkinsky GPP Expansion	45,950	169,606	99,266	314,821	
Tarasovsky Gas Processing Plant	-	-	-	-	
Gas Gathering Systems Cost	18,820	57,765	44,281	120,866	
Metering Facilities Costs	463	1,388	1,068	2,919	
Infrastructure Costs	9,785	34,314	21,692	65,791	
Contributed Assets	9,841	21,528	10,481	41,850	
Other Owners Costs	8,281	-	-	8,281	
Initial Working Capital	3,000	-	-	3,000	
Capital Costs	96,139	284,600	176,789	557,527	93%
Other Loan Interest	1,260	10,763	27,809	39,832	
Other Loan Commitment Fees	1,008	708	170	1,886	
Upfront Fees	-	-	-	-	
Financing Costs	2,268	11,471	27,979	41,717	7%
Total Uses of Funds	98,406	296,070	204,768	599,245	100%

	$	%
Total Debt	419,471	70%
Operating Cash	54,225	9%
Equity Requirement	125,549	21%
	599,245	100%

MEMORANDA	WB/Other Loan	
Loan Draws, Amount	419,471	
Standby Facility	-	
Constr Loan Draws + Standby, Commitment	419,471	419,471
Constr Loan Int Rate	8.15%	
Commitment Fee Rate	0.25%	
Upfront Fee Rate	-	
Other Financing Fees (%, Amt)	-	
Repayment Period	9.0	

** NOTE: ANNUAL SANDU STATEMENT IS FOR PRESENTATION ONLY. VALUES ARE FROM QUARTERLY CALCULATIONS.

VAT TAX FUNDING				
VAT Tax	-	-	-	-
VAT Recovery Expressed in $'s	-	-	-	-
Net VAT Payment	-	-	-	-
PNG Cash Equity for VAT	-	-	-	-
SNGP Cash Equity for VAT	-	-	-	-
Gasprom Cash Equity for VAT	-	-	-	-
Foreign Equity for VAT	-	-	-	-
Cash Equity for VAT	-	-	-	-

Equity Requirement	125,549
Equity for VAT	-
Total Equity	125,549

229

1818

REVISED CASE 1B.1: Wet Gas = $0; Profits Tax only

SIBERIAN GAS PROCESSING PLANT
Equity Returns

(Thousands)

	1994	1995	1996	1997	1998	1999	2000	2001	2002	2003	2004	2005	2006
EQUITY INVESTMENT													
SNGP Equity	-	4,920	10,764	5,240	-	-	-	-	-	-	-	-	-
PNG Equity	-	4,920	10,764	5,240	-	-	-	-	-	-	-	-	-
Gasprom Equity	-	4,920	10,764	5,240	-	-	-	-	-	-	-	-	-
Foreign Equity	-	14,761	32,292	15,721	-	-	-	-	-	-	-	-	-
Additional Equity	-	-	-	-	-	-	-	-	-	-	-	-	-
Total Equity	-	29,522	64,584	31,443	-	-	-	-	-	-	-	-	-
CUMULATIVE EQUITY INVESTMENT													
SNGP Equity Holdings	-	4,920	15,684	20,925	20,925	20,925	20,925	20,925	20,925	20,925	20,925	20,925	20,925
PNG Equity Holdings	-	4,920	15,684	20,925	20,925	20,925	20,925	20,925	20,925	20,925	20,925	20,925	20,925
Gasprom Equity Holdings	-	4,920	15,684	20,925	20,925	20,925	20,925	20,925	20,925	20,925	20,925	20,925	20,925
Foreign Equity Holdings	-	14,761	47,053	62,774	62,774	62,774	62,774	62,774	62,774	62,774	62,774	62,774	62,774
CS Equity Position	-	29,522	94,106	125,549	125,549	125,549	125,549	125,549	125,549	125,549	125,549	125,549	125,549
PROJECT RETURN ON EQUITY													
CS Dividends	-	-	-	-	-	-	5,376	30,943	38,393	43,470	45,961	37,394	55,563
Less: Equity Investment	-	29,522	64,584	31,443	-	-	-	-	-	-	-	-	-
Net Cash Flow	-	(29,522)	(64,584)	(31,443)	-	-	5,376	30,943	38,393	43,470	45,961	37,394	55,563
Cumulative	-	(29,522)	(94,106)	(125,549)	(125,549)	(125,549)	(120,173)	(89,230)	(50,838)	(7,368)	38,594	75,988	131,551
Real Net Cash Flow	-	(28,129)	(59,861)	(28,350)	-	-	4,462	24,693	29,460	32,073	32,607	25,509	36,444
Real Return on Equity	16.0%												

SIBERIAN GAS PROCESSING PLANT
Equity Returns

(Thousands)

	1994	1995	1996	1997	1998	1999	2000	2001	2002	2003	2004	2005	2006
SNGP RETURNS													
SNGP Share of Common Stock		17%	17%	17%	17%	17%	17%	17%	17%	17%	17%	17%	17%
CS Dividends	-	-	-	-	-	-	5,376	30,943	38,393	43,470	45,961	37,394	55,563
SNGP CS Dividends		-	-	-	-	-	896	5,157	6,399	7,245	7,660	6,232	9,260
SNGP CS Dividends		-	-	-	-	-	896	5,157	6,399	7,245	7,660	6,232	9,260
Plus: SNGP NGL Pipeline Marginal Profit	-	-	-	-	-	-	-	-	-	-	-	-	-
Less: SNGP Equity	-	4,920	10,764	5,240	-	-	-	-	-	-	-	-	-
SNGP Net Cash Flow	-	(4,920)	(10,764)	(5,240)	-	-	896	5,157	6,399	7,245	7,660	6,232	9,260
Real SNGP Net Cash Flow	-	(4,688)	(9,977)	(4,725)	-	-	744	4,115	4,910	5,345	5,434	4,251	6,074
SNGP Real Return on Equity	16.0%												
PNG RETURNS													
PNG Share of Common Stock		17%	17%	17%	17%	17%	17%	17%	17%	17%	17%	17%	17%
CS Dividends	-	-	-	-	-	-	5,376	30,943	38,393	43,470	45,961	37,394	55,563
PNG CS Dividends		-	-	-	-	-	896	5,157	6,399	7,245	7,660	6,232	9,260
PNG CS Dividends		-	-	-	-	-	896	5,157	6,399	7,245	7,660	6,232	9,260
Plus: PNG Wet Gas Marginal Profit	-	-	-	-	-	-	-	-	-	-	-	-	-
Less: PNG Equity	-	4,920	10,764	5,240	-	-	-	-	-	-	-	-	-
PNG Net Cash Flow	-	(4,920)	(10,764)	(5,240)	-	-	896	5,157	6,399	7,245	7,660	6,232	9,260
Real PNG Net Cash Flow	-	(4,688)	(9,977)	(4,725)	-	-	744	4,115	4,910	5,345	5,434	4,251	6,074
PNG Real Return on Equity	16.0%												
GASPROM RETURNS													
Gasprom Share of Common Stock		17%	17%	17%	17%	17%	17%	17%	17%	17%	17%	17%	17%
CS Dividends	-	-	-	-	-	-	5,376	30,943	38,393	43,470	45,961	37,394	55,563
Gasprom CS Dividends		-	-	-	-	-	896	5,157	6,399	7,245	7,660	6,232	9,260
Gasprom CS Dividends		-	-	-	-	-	896	5,157	6,399	7,245	7,660	6,232	9,260
Plus: Gasprom Transport Marginal Profit	-	-	-	-	-	-	-	-	-	-	-	-	-
Less: Gasprom Equity	-	4,920	10,764	5,240	-	-	-	-	-	-	-	-	-
Gasprom Net Cash Flow	-	(4,920)	(10,764)	(5,240)	-	-	896	5,157	6,399	7,245	7,660	6,232	9,260
Real Gasprom Net Cash Flow	-	(4,688)	(9,977)	(4,725)	-	-	744	4,115	4,910	5,345	5,434	4,251	6,074
Gasprom Real Return on Equity	16.0%												
FOREIGN INVESTOR RETURNS													
Foreign Share of Common Stock		50%	50%	50%	50%	50%	50%	50%	50%	50%	50%	50%	50%
CS Dividends	-	-	-	-	-	-	5,376	30,943	38,393	43,470	45,961	37,394	55,563
Foreign CS Dividends		-	-	-	-	-	2,688	15,471	19,196	21,735	22,981	18,697	27,781
Foreign CS Dividends		-	-	-	-	-	2,688	15,471	19,196	21,735	22,981	18,697	27,781
Less: Foreign Equity	-	14,761	32,292	15,721	-	-	-	-	-	-	-	-	-
Less: Additional Equity Investment	-	-	-	-	-	-	-	-	-	-	-	-	-
Foreign Net Cash Flow	-	(14,761)	(32,292)	(15,721)	-	-	2,688	15,471	19,196	21,735	22,981	18,697	27,781
Real Foreign Cash Flow	-	(14,065)	(29,930)	(14,175)	-	-	2,231	12,346	14,730	16,036	16,303	12,754	18,222
Foreign Real Return on Equity	16.0%												

1610 231

REVISED CASE 1B.1: Wet Gas = $0; Profits Tax only

SIBERIAN GAS PROCESSING PLANT
Equity Returns

(Thousands)

	2007	2008	2009	2010	2011	2012	2013	2014	2015	Total
EQUITY INVESTMENT										
SNGP Equity	-	-	-	-	-	-	-	-	-	20,925
PNG Equity	-	-	-	-	-	-	-	-	-	20,925
Gasprom Equity	-	-	-	-	-	-	-	-	-	20,925
Foreign Equity	-	-	-	-	-	-	-	-	-	62,774
Additional Equity	-	-	-	-	-	-	-	-	-	-
Total Equity	-	-	-	-	-	-	-	-	-	125,549
CUMULATIVE EQUITY INVESTMENT										
SNGP Equity Holdings	20,925	20,925	20,925	20,925	20,925	20,925	20,925	20,925	20,925	
PNG Equity Holdings	20,925	20,925	20,925	20,925	20,925	20,925	20,925	20,925	20,925	
Gasprom Equity Holdings	20,925	20,925	20,925	20,925	20,925	20,925	20,925	20,925	20,925	
Foreign Equity Holdings	62,774	62,774	62,774	62,774	62,774	62,774	62,774	62,774	62,774	
CS Equity Position	125,549	125,549	125,549	125,549	125,549	125,549	125,549	125,549	125,549	
PROJECT RETURN ON EQUITY										
CS Dividends	81,934	85,211	88,620	92,165	95,851	99,685	103,673	107,819	132,605	1,144,662
Less: Equity Investment	-	-	-	-	-	-	-	-	-	125,549
Net Cash Flow	81,934	85,211	88,620	92,165	95,851	99,685	103,673	107,819	132,605	1,019,113
Cumulative	213,485	298,696	387,316	479,480	575,331	675,016	778,689	886,508	1,019,113	
Real Net Cash Flow	51,675	51,675	51,675	51,675	51,675	51,675	51,675	51,675	61,109	543,412
Real Return on Equity										

SIBERIAN GAS PROCESSING PLANT
Equity Returns

(Thousands)

	2007	2008	2009	2010	2011	2012	2013	2014	2015	Total
SNGP RETURNS										
SNGP Share of Common Stock	17%	17%	17%	17%	17%	17%	17%	17%	17%	
CS Dividends	81,934	85,211	88,620	92,165	95,851	99,685	103,673	107,819	132,605	1,144,662
SNGP CS Dividends	13,656	14,202	14,770	15,361	15,975	16,614	17,279	17,970	22,101	190,777
SNGP CS Dividends	13,656	14,202	14,770	15,361	15,975	16,614	17,279	17,970	22,101	190,777
Plus: SNGP NGL Pipeline Marginal Profit	-	-	-	-	-	-	-	-	-	-
Less: SNGP Equity	-	-	-	-	-	-	-	-	-	20,925
SNGP Net Cash Flow	13,656	14,202	14,770	15,361	15,975	16,614	17,279	17,970	22,101	169,852
Real SNGP Net Cash Flow	8,612	8,612	8,612	8,612	8,612	8,612	8,612	8,612	10,185	90,569
SNGP Real Return on Equity										
PNG RETURNS										
PNG Share of Common Stock	17%	17%	17%	17%	17%	17%	17%	17%	17%	
CS Dividends	81,934	85,211	88,620	92,165	95,851	99,685	103,673	107,819	132,605	1,144,662
PNG CS Dividends	13,656	14,202	14,770	15,361	15,975	16,614	17,279	17,970	22,101	190,777
PNG CS Dividends	13,656	14,202	14,770	15,361	15,975	16,614	17,279	17,970	22,101	190,777
Plus: PNG Wet Gas Marginal Profit	-	-	-	-	-	-	-	-	-	-
Less: PNG Equity	-	-	-	-	-	-	-	-	-	20,925
PNG Net Cash Flow	13,656	14,202	14,770	15,361	15,975	16,614	17,279	17,970	22,101	169,852
Real PNG Net Cash Flow	8,612	8,612	8,612	8,612	8,612	8,612	8,612	8,612	10,185	90,569
PNG Real Return on Equity										
GASPROM RETURNS										
Gasprom Share of Common Stock	17%	17%	17%	17%	17%	17%	17%	17%	17%	
CS Dividends	81,934	85,211	88,620	92,165	95,851	99,685	103,673	107,819	132,605	1,144,662
Gasprom CS Dividends	13,656	14,202	14,770	15,361	15,975	16,614	17,279	17,970	22,101	190,777
Gasprom CS Dividends	13,656	14,202	14,770	15,361	15,975	16,614	17,279	17,970	22,101	190,777
Plus: Gasprom Transport Marginal Profit	-	-	-	-	-	-	-	-	-	-
Less: Gasprom Equity	-	-	-	-	-	-	-	-	-	20,925
Gasprom Net Cash Flow	13,656	14,202	14,770	15,361	15,975	16,614	17,279	17,970	22,101	169,852
Real Gasprom Net Cash Flow	8,612	8,612	8,612	8,612	8,612	8,612	8,612	8,612	10,185	90,569
Gasprom Real Return on Equity										
FOREIGN INVESTOR RETURNS										
Foreign Share of Common Stock	50%	50%	50%	50%	50%	50%	50%	50%	50%	
CS Dividends	81,934	85,211	88,620	92,165	95,851	99,685	103,673	107,819	132,605	1,144,662
Foreign CS Dividends	40,967	42,606	44,310	46,082	47,926	49,843	51,836	53,910	66,303	572,331
Foreign CS Dividends	40,967	42,606	44,310	46,082	47,926	49,843	51,836	53,910	66,303	572,331
Less: Foreign Equity	-	-	-	-	-	-	-	-	-	62,774
Less: Additional Equity Investment	-	-	-	-	-	-	-	-	-	-
Foreign Net Cash Flow	40,967	42,606	44,310	46,082	47,926	49,843	51,836	53,910	66,303	509,557
Real Foreign Cash Flow	25,837	25,837	25,837	25,837	25,837	25,837	25,837	25,837	30,555	271,706
Foreign Real Return on Equity										

1B.1 233

SIBERIAN GAS PROCESSING PLANT
Data and Key Results

TIMING DATA

Cost Estimate Month	Oct 93	First, Last Operation Month	Jan 96 Dec 15
Financial Closing Month	Jan 95	Economic Life	20.00

ENGINEERING DATA

	1994	1995	1996	1997	1998	1999	2000	2001
Rated Capacity (BCM/yr)in 1996, 1998	2.14	4.28						
Stream Factor		-	100%	100%	100%	100%	100%	100%
Operations Partial Year Factor	-	-	1.000	1.000	1.000	100%	100%	100%
Wet Gas Processed (MCM)	-	-	2.14	2.14	4.28	4.28	4.28	4.28
Dry Gas Production (BCM)	-	-	1.84	1.96	3.88	3.88	3.88	3.88
NGL Production (MMTons)	-	-	0.29	0.38	0.82	0.82	0.82	0.82

REVENUE DATA (1996 $'s)

NGL Domestic Price ($/Ton)	67.86	Domestic Gas Price ($/MCM)	17.09
NGL Export Price ($/Ton)	144.00	Export Gas Price ($/MCM)	90.00
% NGL for Export	100%	% Dry Gas for Export	100%

OPERATING COST DATA (1993 $000's)

Wet Gas Feedstock Cost ($/MCM)	-	
Chemicals Cost	382	
Utility Cost	19,432	
Maintenance Cost	985	
Labor Cost, Benefits	1,364	518
Other Expenses	10,134	

TRANSPORT COSTS (1996 $'s)

	DOM	EXP
Dry Gas In-Russia Costs ($/MCM)	-	40.00
Dry Gas Export Costs		32.00
NGL In-Russia Costs ($/Ton)	1.94	36.55
NGL Pipeline Costs	43.52	43.52
NGL Port Loading Charge		1.62
NGL Shipping Cost		15.10

CAPITAL COST DATA (1993 $000's)

	1995	1996	1997	Total
Gubkinsky GPP Expansion	43,700	157,500	90,300	291,500
Tarasovsky Gas Processing Plant	-	-	-	-
Gas Gathering Systems Cost	17,900	53,700	40,200	111,800
Metering Facilities Cost	440	1,290	970	2,700
Contributed Assets	9,841	22,194	11,672	43,707
Other Owners Costs	8,000	-	-	8,000
Infrastructure Costs	9,306	31,874	19,721	60,900
Initial Working Capital	2,839	-	-	2,839
Capital Costs	92,026	266,558	162,862	521,446

WORKING CAPITAL DATA

Days Receivables	45
Days Payables	45

FINANCING DATA

	WB/Other Loan	
% of Permanent Financing	70%	
Loan Amount, Commitment	420,831	420,831
Loan Interest Rate	8.15%	
Start of Repayment, Repayment Period	Jan 98	9.0
Commitment Fees %	0.25%	
Upfront Fee %	-	
Other Fin Fees & Costs (%, Amt)	-	

KEY RESULTS SUMMARY

Real Return on Investment (no taxes)	12.6%
Unleveraged Payback (Yrs)	5.5
Nominal NPV (Oct '93) @ 15.0%	29,873
Real Return on Equity	9.6%
Leveraged Payback (Yrs)	8.8
Nominal NPV (Oct '93) @ 15.0%	(17,007)
Min Debt Service Coverage	104%
Average Debt Service Coverage	137%

FINANCING DATA (cont'd)

	Actual
Required Reserves (1st Operating Yr)	39,334
Cash Flow Dedicated to Reserves	100%
Reinvestment Rate	3.0%

TAX DATA

Tax & Book In Service Month	Jan 96
Profits Tax	32.00%
15% Yr SL Property %	100.0%
Carryforward Years	5
VAT Tax (% of CapEx)	20.0%
Property Tax (% of Fixed Assets)	-
Road Tax (% of Revenues)	0.4%
Dry Gas Export Tariff ('93 $/MCM)	-
NGL Export Tariff ('93 $/Ton)	-

ECONOMIC DATA

Global Inflation Rate	2.8% **
Capital Cost Esc Rate	2.8%
O&M Esc Rate	2.8%
Export Gas Price Esc Rate	2.8%
Domestic Gas Price Esc Rate	2.8%
Export NGL Price Esc Rate	2.8%
Domestic NGL Price Esc Rate	2.8%

** Until 2000, 4% thereafter
(all escalation equivalent to inflation)

SENSITIVITY ANALYSIS FACTORS

O&M Cost	1.00
Gas Price	1.00
NGL Price	1.00
Capital Cost	1.00
Transport Cost	1.00
Wet Gas Price	1.00

SIBERIAN GAS PROCESSING PLANT
Annual Sources and Uses of Funds During Construction

($US Thousands)

	1995	1996	1997	Total	%
SOURCES OF FUNDS					
World Bank/Other Loan	68,887	207,727	144,217	420,831	70%
SIBNG Cash Equity	-	-	-	-	-
PNG Cash Equity	-	-	-	-	-
Gasprom Cash Equity	4,921	11,097	5,836	21,854	4%
SIBNG Equity	4,921	11,097	5,836	21,854	4%
PNG Equity	4,921	11,097	5,836	21,854	4%
Foreign Equity	14,762	33,291	17,508	65,561	11%
JV Operating Cash Flow	-	22,443	26,791	49,235	8%
Total Sources of Funds	98,410	296,753	206,024	601,188	100%
USES OF FUNDS					
Gubkinsky GPP Expansion	45,950	169,606	99,266	314,821	
Tarasovsky Gas Processing Plant	-	-	-	-	
Gas Gathering Systems Cost	18,820	57,765	44,281	120,866	
Metering Facilities Costs	463	1,388	1,068	2,919	
Infrastructure Costs	9,785	34,314	21,692	65,791	
Contributed Assets	9,841	22,194	11,672	43,707	
Other Owners Costs	8,281	-	-	8,281	
Initial Working Capital	3,000	-	-	3,000	
Capital Costs	96,139	285,266	177,980	559,385	93%
Other Loan Interest	1,260	10,777	27,873	39,910	
Other Loan Commitment Fees	1,011	711	171	1,893	
Upfront Fees	-	-	-	-	
Financing Costs	2,271	11,488	28,044	41,803	7%
Total Uses of Funds	98,410	296,753	206,024	601,188	100%

	$	%
Total Debt	420,831	70%
Operating Cash	49,235	8%
Equity Requirement	131,122	22%
	601,188	100%

MEMORANDA	WB/Other Loan	
Loan Draws, Amount	420,831	
Standby Facility	-	
Constr Loan Draws + Standby, Commitment	420,831	420,831
Constr Loan Int Rate	8.15%	
Commitment Fee Rate	0.25%	
Upfront Fee Rate	-	
Other Financing Fees (%, Amt)	-	
Repayment Period	9.0	

** NOTE: ANNUAL SANDU STATEMENT IS FOR PRESENTATION ONLY. VALUES ARE FROM QUARTERLY CALCULATIONS.

VAT TAX FUNDING				
VAT Tax	15,003	52,614	33,262	100,879
VAT Recovery Expressed in $'s	435	8,945	30,692	40,072
Net VAT Payment	14,569	43,669	2,570	60,807
PNG Cash Equity for VAT	2,428	7,278	428	10,135
SNGP Cash Equity for VAT	2,428	7,278	428	10,135
Gasprom Cash Equity for VAT	2,428	7,278	428	10,135
Foreign Equity for VAT	7,284	21,834	1,285	30,404
Cash Equity for VAT	14,569	43,669	2,570	60,807

Equity Requirement	131,122
Equity for VAT	60,807
Total Equity	191,929

REVISED CASE 1B.1: Wet Gas = $0; Expected Tax; MIN NGL Production

SIBERIAN GAS PROCESSING PLANT
Equity Returns

(Thousands)

	1994	1995	1996	1997	1998	1999	2000	2001	2002	2003	2004	2005	2006
EQUITY INVESTMENT													
SNGP Equity	-	7,349	18,375	6,264	-	-	-	-	-	-	-	-	-
PNG Equity	-	7,349	18,375	6,264	-	-	-	-	-	-	-	-	-
Gasprom Equity	-	7,349	18,375	6,264	-	-	-	-	-	-	-	-	-
Foreign Equity	-	22,046	55,126	18,793	-	-	-	-	-	-	-	-	-
Additional Equity	-	-	-	-	-	-	-	-	-	-	-	-	-
Total Equity	-	44,092	110,252	37,585	-	-	-	-	-	-	-	-	-
CUMULATIVE EQUITY INVESTMENT													
SNGP Equity Holdings	-	7,349	25,724	31,988	31,988	31,988	31,988	31,988	31,988	31,988	31,988	31,988	31,988
PNG Equity Holdings	-	7,349	25,724	31,988	31,988	31,988	31,988	31,988	31,988	31,988	31,988	31,988	31,988
Gasprom Equity Holdings	-	7,349	25,724	31,988	31,988	31,988	31,988	31,988	31,988	31,988	31,988	31,988	31,988
Foreign Equity Holdings	-	22,046	77,172	95,965	95,965	95,965	95,965	95,965	95,965	95,965	95,965	95,965	95,965
CS Equity Position	-	44,092	154,344	191,929	191,929	191,929	191,929	191,929	191,929	191,929	191,929	191,929	191,929
PROJECT RETURN ON EQUITY													
CS Dividends	-	-	-	-	-	-	13,440	17,703	24,643	31,509	33,521	31,614	48,658
Less: Equity Investment	-	44,092	110,252	37,585	-	-	-	-	-	-	-	-	-
Net Cash Flow	-	(44,092)	(110,252)	(37,585)	-	-	13,440	17,703	24,643	31,509	33,521	31,614	48,658
Cumulative	-	(44,092)	(154,344)	(191,929)	(191,929)	(191,929)	(178,489)	(160,786)	(136,143)	(104,635)	(71,113)	(39,500)	9,158
Real Net Cash Flow	-	(42,012)	(102,189)	(33,888)	-	-	11,155	14,127	18,909	23,247	23,781	21,565	31,915
Real Return on Equity	9.6%												

SIBERIAN GAS PROCESSING PLANT
Equity Returns

(Thousands)

	1994	1995	1996	1997	1998	1999	2000	2001	2002	2003	2004	2005	2006
SNGP RETURNS													
SNGP Share of Common Stock		17%	17%	17%	17%	17%	17%	17%	17%	17%	17%	17%	17%
CS Dividends	-	-	-	-	-	-	13,440	17,703	24,643	31,509	33,521	31,614	48,658
SNGP CS Dividends		-	-	-	-	-	2,240	2,950	4,107	5,251	5,587	5,269	8,110
SNGP CS Dividends		-	-	-	-	-	2,240	2,950	4,107	5,251	5,587	5,269	8,110
Plus: SNGP NGL Pipeline Marginal Profit	-	-	-	-	-	-	-	-	-	-	-	-	-
Less: SNGP Equity	-	7,349	18,375	6,264	-	-	-	-	-	-	-	-	-
SNGP Net Cash Flow	-	(7,349)	(18,375)	(6,264)	-	-	2,240	2,950	4,107	5,251	5,587	5,269	8,110
Real SNGP Net Cash Flow	-	(7,002)	(17,032)	(5,648)	-	-	1,859	2,354	3,152	3,875	3,964	3,594	5,319
SNGP Real Return on Equity	9.6%												
PNG RETURNS													
PNG Share of Common Stock		17%	17%	17%	17%	17%	17%	17%	17%	17%	17%	17%	17%
CS Dividends	-	-	-	-	-	-	13,440	17,703	24,643	31,509	33,521	31,614	48,658
PNG CS Dividends		-	-	-	-	-	2,240	2,950	4,107	5,251	5,587	5,269	8,110
PNG CS Dividends		-	-	-	-	-	2,240	2,950	4,107	5,251	5,587	5,269	8,110
Plus: PNG Wet Gas Marginal Profit	-	-	-	-	-	-	-	-	-	-	-	-	-
Less: PNG Equity	-	7,349	18,375	6,264	-	-	-	-	-	-	-	-	-
PNG Net Cash Flow	-	(7,349)	(18,375)	(6,264)	-	-	2,240	2,950	4,107	5,251	5,587	5,269	8,110
Real PNG Net Cash Flow	-	(7,002)	(17,032)	(5,648)	-	-	1,859	2,354	3,152	3,875	3,964	3,594	5,319
PNG Real Return on Equity	9.6%												
GASPROM RETURNS													
Gasprom Share of Common Stock		17%	17%	17%	17%	17%	17%	17%	17%	17%	17%	17%	17%
CS Dividends	-	-	-	-	-	-	13,440	17,703	24,643	31,509	33,521	31,614	48,658
Gasprom CS Dividends		-	-	-	-	-	2,240	2,950	4,107	5,251	5,587	5,269	8,110
Gasprom CS Dividends		-	-	-	-	-	2,240	2,950	4,107	5,251	5,587	5,269	8,110
Plus: Gasprom Transport Marginal Profit	-	-	-	-	-	-	-	-	-	-	-	-	-
Less: Gasprom Equity	-	7,349	18,375	6,264	-	-	-	-	-	-	-	-	-
Gasprom Net Cash Flow	-	(7,349)	(18,375)	(6,264)	-	-	2,240	2,950	4,107	5,251	5,587	5,269	8,110
Real Gasprom Net Cash Flow	-	(7,002)	(17,032)	(5,648)	-	-	1,859	2,354	3,152	3,875	3,964	3,594	5,319
Gasprom Real Return on Equity	9.6%												
FOREIGN INVESTOR RETURNS													
Foreign Share of Common Stock		50%	50%	50%	50%	50%	50%	50%	50%	50%	50%	50%	50%
CS Dividends	-	-	-	-	-	-	13,440	17,703	24,643	31,509	33,521	31,614	48,658
Foreign CS Dividends		-	-	-	-	-	6,720	8,851	12,321	15,754	16,761	15,807	24,329
Foreign CS Dividends		-	-	-	-	-	6,720	8,851	12,321	15,754	16,761	15,807	24,329
Less: Foreign Equity	-	22,046	55,126	18,793	-	-	-	-	-	-	-	-	-
Less: Additional Equity Investment	-	-	-	-	-	-	-	-	-	-	-	-	-
Foreign Net Cash Flow	-	(22,046)	(55,126)	(18,793)	-	-	6,720	8,851	12,321	15,754	16,761	15,807	24,329
Real Foreign Cash Flow	-	(21,006)	(51,095)	(16,944)	-	-	5,577	7,063	9,455	11,624	11,891	10,783	15,958
Foreign Real Return on Equity	9.6%												

237

REVISED CASE 1B.1: Wet Gas = $0; Expected Tax; MIN NGL Production

SIBERIAN GAS PROCESSING PLANT
Equity Returns

(Thousands)

	2007	2008	2009	2010	2011	2012	2013	2014	2015	Total
EQUITY INVESTMENT										
SNGP Equity	-	-	-	-	-	-	-	-	-	31,988
PNG Equity	-	-	-	-	-	-	-	-	-	31,988
Gasprom Equity	-	-	-	-	-	-	-	-	-	31,988
Foreign Equity	-	-	-	-	-	-	-	-	-	95,965
Additional Equity	-	-	-	-	-	-	-	-	-	-
Total Equity	-	-	-	-	-	-	-	-	-	191,929
CUMULATIVE EQUITY INVESTMENT										
SNGP Equity Holdings	31,988	31,988	31,988	31,988	31,988	31,988	31,988	31,988	31,988	
PNG Equity Holdings	31,988	31,988	31,988	31,988	31,988	31,988	31,988	31,988	31,988	
Gasprom Equity Holdings	31,988	31,988	31,988	31,988	31,988	31,988	31,988	31,988	31,988	
Foreign Equity Holdings	95,965	95,965	95,965	95,965	95,965	95,965	95,965	95,965	95,965	
CS Equity Position	191,929	191,929	191,929	191,929	191,929	191,929	191,929	191,929	191,929	
PROJECT RETURN ON EQUITY										
CS Dividends	70,747	73,577	76,520	79,581	82,764	86,074	89,517	93,098	114,500	967,464
Less: Equity Investment	-	-	-	-	-	-	-	-	-	191,929
Net Cash Flow	70,747	73,577	76,520	79,581	82,764	86,074	89,517	93,098	114,500	775,535
Cumulative	79,905	153,481	230,001	309,582	392,345	478,420	567,937	661,035	775,535	
Real Net Cash Flow	44,619	44,619	44,619	44,619	44,619	44,619	44,619	44,619	52,765	376,329
Real Return on Equity										

SIBERIAN GAS PROCESSING PLANT
Equity Returns

(Thousands)

	2007	2008	2009	2010	2011	2012	2013	2014	2015	Total
SNGP RETURNS										
SNGP Share of Common Stock	17%	17%	17%	17%	17%	17%	17%	17%	17%	
CS Dividends	70,747	73,577	76,520	79,581	82,764	86,074	89,517	93,098	114,500	967,464
SNGP CS Dividends	11,791	12,263	12,753	13,263	13,794	14,346	14,920	15,516	19,083	161,244
SNGP CS Dividends	11,791	12,263	12,753	13,263	13,794	14,346	14,920	15,516	19,083	161,244
Plus: SNGP NGL Pipeline Marginal Profit	-	-	-	-	-	-	-	-	-	-
Less: SNGP Equity	-	-	-	-	-	-	-	-	-	31,988
SNGP Net Cash Flow	11,791	12,263	12,753	13,263	13,794	14,346	14,920	15,516	19,083	129,256
Real SNGP Net Cash Flow	7,437	7,437	7,437	7,437	7,437	7,437	7,437	7,437	8,794	62,721
SNGP Real Return on Equity										
PNG RETURNS										
PNG Share of Common Stock	17%	17%	17%	17%	17%	17%	17%	17%	17%	
CS Dividends	70,747	73,577	76,520	79,581	82,764	86,074	89,517	93,098	114,500	967,464
PNG CS Dividends	11,791	12,263	12,753	13,263	13,794	14,346	14,920	15,516	19,083	161,244
PNG CS Dividends	11,791	12,263	12,753	13,263	13,794	14,346	14,920	15,516	19,083	161,244
Plus: PNG Wet Gas Marginal Profit	-	-	-	-	-	-	-	-	-	-
Less: PNG Equity	-	-	-	-	-	-	-	-	-	31,988
PNG Net Cash Flow	11,791	12,263	12,753	13,263	13,794	14,346	14,920	15,516	19,083	129,256
Real PNG Net Cash Flow	7,437	7,437	7,437	7,437	7,437	7,437	7,437	7,437	8,794	62,721
PNG Real Return on Equity										
GASPROM RETURNS										
Gasprom Share of Common Stock	17%	17%	17%	17%	17%	17%	17%	17%	17%	
CS Dividends	70,747	73,577	76,520	79,581	82,764	86,074	89,517	93,098	114,500	967,464
Gasprom CS Dividends	11,791	12,263	12,753	13,263	13,794	14,346	14,920	15,516	19,083	161,244
Gasprom CS Dividends	11,791	12,263	12,753	13,263	13,794	14,346	14,920	15,516	19,083	161,244
Plus: Gasprom Transport Marginal Profit	-	-	-	-	-	-	-	-	-	-
Less: Gasprom Equity	-	-	-	-	-	-	-	-	-	31,988
Gasprom Net Cash Flow	11,791	12,263	12,753	13,263	13,794	14,346	14,920	15,516	19,083	129,256
Real Gasprom Net Cash Flow	7,437	7,437	7,437	7,437	7,437	7,437	7,437	7,437	8,794	62,721
Gasprom Real Return on Equity										
FOREIGN INVESTOR RETURNS										
Foreign Share of Common Stock	50%	50%	50%	50%	50%	50%	50%	50%	50%	
CS Dividends	70,747	73,577	76,520	79,581	82,764	86,074	89,517	93,098	114,500	967,464
Foreign CS Dividends	35,373	36,788	38,260	39,790	41,382	43,037	44,759	46,549	57,250	483,732
Foreign CS Dividends	35,373	36,788	38,260	39,790	41,382	43,037	44,759	46,549	57,250	483,732
Less: Foreign Equity	-	-	-	-	-	-	-	-	-	95,965
Less: Additional Equity Investment	-	-	-	-	-	-	-	-	-	-
Foreign Net Cash Flow	35,373	36,788	38,260	39,790	41,382	43,037	44,759	46,549	57,250	387,767
Real Foreign Cash Flow	22,310	22,310	22,310	22,310	22,310	22,310	22,310	22,310	26,383	188,164
Foreign Real Return on Equity										

239

1230

SIBERIAN GAS PROCESSING PLANT
Data and Key Results

TIMING DATA

Cost Estimate Month	Oct 93	First, Last Operation Month	Jan 96	Dec 15
Financial Closing Month	Jan 95	Economic Life	20.00	

ENGINEERING DATA

	1994	1995	1996	1997	1998	1999	2000	2001
Rated Capacity (BCM/yr)in 1996, 1998	2.14	4.28						
Stream Factor		-	100%	100%	100%	100%	100%	100%
Operations Partial Year Factor	-	-	1.000	1.000	1.000	100%	100%	100%
Wet Gas Processed (MCM)	-	-	2.14	2.14	4.28	4.28	4.28	4.28
Dry Gas Production (BCM)	-	-	1.77	1.86	3.64	3.64	3.64	3.64
NGL Production (MMTons)	-	-	0.42	0.59	1.31	1.31	1.31	1.31

REVENUE DATA (1996 $'s)

NGL Domestic Price ($/Ton)	67.86	Domestic Gas Price ($/MCM)	17.09
NGL Export Price ($/Ton)	144.00	Export Gas Price ($/MCM)	90.00
% NGL for Export	100%	% Dry Gas for Export	100%

OPERATING COST DATA (1993 $000's)

Wet Gas Feedstock Cost ($/MCM)	-	
Chemicals Cost	382	
Utility Cost	19,432	
Maintenance Cost	985	
Labor Cost, Benefits	1,364	518
Other Expenses	10,134	

TRANSPORT COSTS (1996 $'s)

	DOM	EXP
Dry Gas In-Russia Costs ($/MCM)	-	40.00
Dry Gas Export Costs		32.00
NGL In-Russia Costs ($/Ton)	1.94	36.55
NGL Pipeline Costs	43.52	43.52
NGL Port Loading Charge		1.62
NGL Shipping Cost		15.10

CAPITAL COST DATA (1993 $000's)

	1995	1996	1997	Total
Gubkinsky GPP Expansion	43,700	157,500	90,300	291,500
Tarasovsky Gas Processing Plant	-	-	-	-
Gas Gathering Systems Cost	17,900	53,700	40,200	111,800
Metering Facilities Cost	440	1,290	970	2,700
Contributed Assets	9,840	21,196	9,739	40,776
Other Owners Costs	8,000	-	-	8,000
Infrastructure Costs	9,306	31,874	19,721	60,900
Initial Working Capital	2,839	-	-	2,839
Capital Costs	92,025	265,560	160,930	518,515

WORKING CAPITAL DATA

Days Receivables	45
Days Payables	45

FINANCING DATA

	WB/Other Loan	
% of Permanent Financing	70%	
Loan Amount, Commitment	418,687	418,690
Loan Interest Rate	8.15%	
Start of Repayment, Repayment Period	Jan 98	9.0
Commitment Fees %	0.25%	
Upfront Fee %	-	
Other Fin Fees & [illegible] Costs (%, Amt)	-	

240

KEY RESULTS SUMMARY

Real Return on Investment (no taxes)		16.6%
Unleveraged Payback (Yrs)		4.4
Nominal NPV (Oct '93) @	15.0%	118,009
Real Return on Equity		15.5%
Leveraged Payback (Yrs)		5.4
Nominal NPV (Oct '93) @	15.0%	51,718
Min Debt Service Coverage		128%
Average Debt Service Coverage		165%

FINANCING DATA (cont'd)

	Actual
Required Reserves (1st Operating Yr)	39,134
Cash Flow Dedicated to Reserves	100%
Reinvestment Rate	3.0%

TAX DATA

Tax & Book In Service Month	Jan 96
Profits Tax	32.00%
15% Yr SL Property %	100.0%
Carryforward Years	5
VAT Tax (% of CapEx)	20.0%
Property Tax (% of Fixed Assets)	-
Road Tax (% of Revenues)	0.4%
Dry Gas Export Tariff ('93 $/MCM)	-
NGL Export Tariff ('93 $/Ton)	-

ECONOMIC DATA

Global Inflation Rate	2.8% **
Capital Cost Esc Rate	2.8%
O&M Esc Rate	2.8%
Export Gas Price Esc Rate	2.8%
Domestic Gas Price Esc Rate	2.8%
Export NGL Price Esc Rate	2.8%
Domestic NGL Price Esc Rate	2.8%

** Until 2000, 4% thereafter
(all escalation equivalent to inflation)

SENSITIVITY ANALYSIS FACTORS

O&M Cost	1.00
Gas Price	1.00
NGL Price	1.00
Capital Cost	1.00
Transport Cost	1.00
Wet Gas Price	1.00

SIBERIAN GAS PROCESSING PLANT
Annual Sources and Uses of Funds During Construction

($US Thousands)

	1995	1996	1997	Total	%
SOURCES OF FUNDS					
World Bank/Other Loan	68,883	207,011	142,793	418,687	70%
SIBNG Cash Equity	-	-	-	-	-
PNG Cash Equity	-	-	-	-	-
Gasprom Cash Equity	4,920	10,598	4,869	20,388	3%
SIBNG Equity	4,920	10,598	4,869	20,388	3%
PNG Equity	4,920	10,598	4,869	20,388	3%
Foreign Equity	14,761	31,794	14,608	61,164	10%
JV Operating Cash Flow	-	25,130	31,980	57,110	10%
Total Sources of Funds	98,404	295,730	203,990	598,124	100%
USES OF FUNDS					
Gubkinsky GPP Expansion	45,950	169,606	99,266	314,821	
Tarasovsky Gas Processing Plant	-	-	-	-	
Gas Gathering Systems Cost	18,820	57,765	44,281	120,866	
Metering Facilities Costs	463	1,388	1,068	2,919	
Infrastructure Costs	9,785	34,314	21,692	65,791	
Contributed Assets	9,840	21,196	9,739	40,776	
Other Owners Costs	8,281	-	-	8,281	
Initial Working Capital	3,000	-	-	3,000	
Capital Costs	96,138	284,268	176,047	556,453	93%
Other Loan Interest	1,260	10,755	27,774	39,789	
Other Loan Commitment Fees	1,006	706	169	1,881	
Upfront Fees	-	-	-	-	
Financing Costs	2,266	11,462	27,943	41,671	7%
Total Uses of Funds	98,404	295,730	203,990	598,124	100%

	$	%
Total Debt	418,687	70%
Operating Cash	57,110	10%
Equity Requirement	122,327	20%
	598,124	100%

MEMORANDA	WB/Other Loan	
Loan Draws, Amount	418,687	
Standby Facility	-	
Constr Loan Draws + Standby, Commitment	418,687	418,690
Constr Loan Int Rate	8.15%	
Commitment Fee Rate	0.25%	
Upfront Fee Rate	-	
Other Financing Fees (%, Amt)	-	
Repayment Period	9.0	

** NOTE: ANNUAL SANDU STATEMENT IS FOR PRESENTATION ONLY. VALUES ARE FROM QUARTERLY CALCULATIONS.

VAT TAX FUNDING				
VAT Tax	15,003	52,614	33,262	100,879
VAT Recovery Expressed in $'s	435	8,945	30,692	40,072
Net VAT Payment	14,569	43,669	2,570	60,807
PNG Cash Equity for VAT	2,428	7,278	428	10,135
SNGP Cash Equity for VAT	2,428	7,278	428	10,135
Gasprom Cash Equity for VAT	2,428	7,278	428	10,135
Foreign Equity for VAT	7,284	21,834	1,285	30,404
Cash Equity for VAT	14,569	43,669	2,570	60,807

Equity Requirement	122,327
Equity for VAT	60,807
Total Equity	183,134

1831

SIBERIAN GAS PROCESSING PLANT
Equity Returns

(Thousands)

	1994	1995	1996	1997	1998	1999	2000	2001	2002	2003	2004	2005	2006
EQUITY INVESTMENT													
SNGP Equity	-	7,348	17,876	5,298	-	-	-	-	-	-	-	-	-
PNG Equity	-	7,348	17,876	5,298	-	-	-	-	-	-	-	-	-
Gasprom Equity	-	7,348	17,876	5,298	-	-	-	-	-	-	-	-	-
Foreign Equity	-	22,045	53,629	15,893	-	-	-	-	-	-	-	-	-
Additional Equity	-	-	-	-	-	-	-	-	-	-	-	-	-
Total Equity	-	44,090	107,258	31,787	-	-	-	-	-	-	-	-	-
CUMULATIVE EQUITY INVESTMENT													
SNGP Equity Holdings	-	7,348	25,225	30,522	30,522	30,522	30,522	30,522	30,522	30,522	30,522	30,522	30,522
PNG Equity Holdings	-	7,348	25,225	30,522	30,522	30,522	30,522	30,522	30,522	30,522	30,522	30,522	30,522
Gasprom Equity Holdings	-	7,348	25,225	30,522	30,522	30,522	30,522	30,522	30,522	30,522	30,522	30,522	30,522
Foreign Equity Holdings	-	22,045	75,674	91,567	91,567	91,567	91,567	91,567	91,567	91,567	91,567	91,567	91,567
CS Equity Position	-	44,090	151,348	183,134	183,134	183,134	183,134	183,134	183,134	183,134	183,134	183,134	183,134
PROJECT RETURN ON EQUITY													
CS Dividends	-	-	-	-	-	31,976	42,705	39,547	46,063	51,247	50,839	34,274	62,609
Less: Equity Investment	-	44,090	107,258	31,787	-	-	-	-	-	-	-	-	-
Net Cash Flow	-	(44,090)	(107,258)	(31,787)	-	31,976	42,705	39,547	46,063	51,247	50,839	34,274	62,609
Cumulative	-	(44,090)	(151,348)	(183,134)	(183,134)	(151,159)	(108,454)	(68,907)	(22,844)	28,403	79,242	113,516	176,125
Real Net Cash Flow	-	(42,010)	(99,414)	(28,660)	-	27,281	35,442	31,559	35,346	37,811	36,067	23,380	41,066
Real Return on Equity	15.5%												

SIBERIAN GAS PROCESSING PLANT
Equity Returns

(Thousands)

	1994	1995	1996	1997	1998	1999	2000	2001	2002	2003	2004	2005	2006
SNGP RETURNS													
SNGP Share of Common Stock		17%	17%	17%	17%	17%	17%	17%	17%	17%	17%	17%	17%
CS Dividends	-	-	-	-	-	31,976	42,705	39,547	46,063	51,247	50,839	34,274	62,609
SNGP CS Dividends		-	-	-	-	5,329	7,117	6,591	7,677	8,541	8,473	5,712	10,435
SNGP CS Dividends		-	-	-	-	5,329	7,117	6,591	7,677	8,541	8,473	5,712	10,435
Plus: SNGP NGL Pipeline Marginal Profit	-	-	-	-	-	-	-	-	-	-	-	-	-
Less: SNGP Equity	-	7,348	17,876	5,298	-	-	-	-	-	-	-	-	-
SNGP Net Cash Flow	-	(7,348)	(17,876)	(5,298)	-	5,329	7,117	6,591	7,677	8,541	8,473	5,712	10,435
Real SNGP Net Cash Flow	-	(7,002)	(16,569)	(4,777)	-	4,547	5,907	5,260	5,891	6,302	6,011	3,897	6,844
SNGP Real Return on Equity	15.5%												
PNG RETURNS													
PNG Share of Common Stock		17%	17%	17%	17%	17%	17%	17%	17%	17%	17%	17%	17%
CS Dividends	-	-	-	-	-	31,976	42,705	39,547	46,063	51,247	50,839	34,274	62,609
PNG CS Dividends		-	-	-	-	5,329	7,117	6,591	7,677	8,541	8,473	5,712	10,435
PNG CS Dividends		-	-	-	-	5,329	7,117	6,591	7,677	8,541	8,473	5,712	10,435
Plus: PNG Wet Gas Marginal Profit	-	-	-	-	-	-	-	-	-	-	-	-	-
Less: PNG Equity	-	7,348	17,876	5,298	-	-	-	-	-	-	-	-	-
PNG Net Cash Flow	-	(7,348)	(17,876)	(5,298)	-	5,329	7,117	6,591	7,677	8,541	8,473	5,712	10,435
Real PNG Net Cash Flow	-	(7,002)	(16,569)	(4,777)	-	4,547	5,907	5,260	5,891	6,302	6,011	3,897	6,844
PNG Real Return on Equity	15.5%												
GASPROM RETURNS													
Gasprom Share of Common Stock		17%	17%	17%	17%	17%	17%	17%	17%	17%	17%	17%	17%
CS Dividends	-	-	-	-	-	31,976	42,705	39,547	46,063	51,247	50,839	34,274	62,609
Gasprom CS Dividends		-	-	-	-	5,329	7,117	6,591	7,677	8,541	8,473	5,712	10,435
Gasprom CS Dividends		-	-	-	-	5,329	7,117	6,591	7,677	8,541	8,473	5,712	10,435
Plus: Gasprom Transport Marginal Profit	-	-	-	-	-	-	-	-	-	-	-	-	-
Less: Gasprom Equity	-	7,348	17,876	5,298	-	-	-	-	-	-	-	-	-
Gasprom Net Cash Flow	-	(7,348)	(17,876)	(5,298)	-	5,329	7,117	6,591	7,677	8,541	8,473	5,712	10,435
Real Gasprom Net Cash Flow	-	(7,002)	(16,569)	(4,777)	-	4,547	5,907	5,260	5,891	6,302	6,011	3,897	6,844
Gasprom Real Return on Equity	15.5%												
FOREIGN INVESTOR RETURNS													
Foreign Share of Common Stock		50%	50%	50%	50%	50%	50%	50%	50%	50%	50%	50%	50%
CS Dividends	-	-	-	-	-	31,976	42,705	39,547	46,063	51,247	50,839	34,274	62,609
Foreign CS Dividends		-	-	-	-	15,988	21,352	19,773	23,032	25,623	25,420	17,137	31,304
Foreign CS Dividends		-	-	-	-	15,988	21,352	19,773	23,032	25,623	25,420	17,137	31,304
Less: Foreign Equity	-	22,045	53,629	15,893	-	-	-	-	-	-	-	-	-
Less: Additional Equity Investment	-	-	-	-	-	-	-	-	-	-	-	-	-
Foreign Net Cash Flow	-	(22,045)	(53,629)	(15,893)	-	15,988	21,352	19,773	23,032	25,623	25,420	17,137	31,304
Real Foreign Cash Flow	-	(21,005)	(49,707)	(14,330)	-	13,641	17,721	15,780	17,673	18,905	18,034	11,690	20,533
Foreign Real Return on Equity	15.5%												

833
243

REVISED CASE 1B.1: Wet Gas = $0; Expected Tax; MAX NGL Production

SIBERIAN GAS PROCESSING PLANT
Equity Returns

(Thousands)

	2007	2008	2009	2010	2011	2012	2013	2014	2015	Total
EQUITY INVESTMENT										
SNGP Equity	-	-	-	-	-	-	-	-	-	30,522
PNG Equity	-	-	-	-	-	-	-	-	-	30,522
Gasprom Equity	-	-	-	-	-	-	-	-	-	30,522
Foreign Equity	-	-	-	-	-	-	-	-	-	91,567
Additional Equity	-	-	-	-	-	-	-	-	-	-
Total Equity	-	-	-	-	-	-	-	-	-	183,134
CUMULATIVE EQUITY INVESTMENT										
SNGP Equity Holdings	30,522	30,522	30,522	30,522	30,522	30,522	30,522	30,522	30,522	
PNG Equity Holdings	30,522	30,522	30,522	30,522	30,522	30,522	30,522	30,522	30,522	
Gasprom Equity Holdings	30,522	30,522	30,522	30,522	30,522	30,522	30,522	30,522	30,522	
Foreign Equity Holdings	91,567	91,567	91,567	91,567	91,567	91,567	91,567	91,567	91,567	
CS Equity Position	183,134	183,134	183,134	183,134	183,134	183,134	183,134	183,134	183,134	
PROJECT RETURN ON EQUITY										
CS Dividends	89,217	92,786	96,497	100,357	104,371	108,546	112,888	117,403	144,392	1,325,716
Less: Equity Investment	-	-	-	-	-	-	-	-	-	183,134
Net Cash Flow	89,217	92,786	96,497	100,357	104,371	108,546	112,888	117,403	144,392	1,142,582
Cumulative	265,342	358,128	454,625	554,981	659,353	767,898	880,786	998,190	1,142,582	
Real Net Cash Flow	56,268	56,268	56,268	56,268	56,268	56,268	56,268	56,268	66,541	614,552
Real Return on Equity										

SIBERIAN GAS PROCESSING PLANT
Equity Returns

(Thousands)

	2007	2008	2009	2010	2011	2012	2013	2014	2015	Total
SNGP RETURNS										
SNGP Share of Common Stock	17%	17%	17%	17%	17%	17%	17%	17%	17%	
CS Dividends	89,217	92,786	96,497	100,357	104,371	108,546	112,888	117,403	144,392	1,325,716
SNGP CS Dividends	14,869	15,464	16,083	16,726	17,395	18,091	18,815	19,567	24,065	220,953
SNGP CS Dividends	14,869	15,464	16,083	16,726	17,395	18,091	18,815	19,567	24,065	220,953
Plus: SNGP NGL Pipeline Marginal Profit	-	-	-	-	-	-	-	-	-	-
Less: SNGP Equity	-	-	-	-	-	-	-	-	-	30,522
SNGP Net Cash Flow	14,869	15,464	16,083	16,726	17,395	18,091	18,815	19,567	24,065	190,430
Real SNGP Net Cash Flow	9,378	9,378	9,378	9,378	9,378	9,378	9,378	9,378	11,090	102,425
SNGP Real Return on Equity										
PNG RETURNS										
PNG Share of Common Stock	17%	17%	17%	17%	17%	17%	17%	17%	17%	
CS Dividends	89,217	92,786	96,497	100,357	104,371	108,546	112,888	117,403	144,392	1,325,716
PNG CS Dividends	14,869	15,464	16,083	16,726	17,395	18,091	18,815	19,567	24,065	220,953
PNG CS Dividends	14,869	15,464	16,083	16,726	17,395	18,091	18,815	19,567	24,065	220,953
Plus: PNG Wet Gas Marginal Profit	-	-	-	-	-	-	-	-	-	-
Less: PNG Equity	-	-	-	-	-	-	-	-	-	30,522
PNG Net Cash Flow	14,869	15,464	16,083	16,726	17,395	18,091	18,815	19,567	24,065	190,430
Real PNG Net Cash Flow	9,378	9,378	9,378	9,378	9,378	9,378	9,378	9,378	11,090	102,425
PNG Real Return on Equity										
GASPROM RETURNS										
Gasprom Share of Common Stock	17%	17%	17%	17%	17%	17%	17%	17%	17%	
CS Dividends	89,217	92,786	96,497	100,357	104,371	108,546	112,888	117,403	144,392	1,325,716
Gasprom CS Dividends	14,869	15,464	16,083	16,726	17,395	18,091	18,815	19,567	24,065	220,953
Gasprom CS Dividends	14,869	15,464	16,083	16,726	17,395	18,091	18,815	19,567	24,065	220,953
Plus: Gasprom Transport Marginal Profit	-	-	-	-	-	-	-	-	-	-
Less: Gasprom Equity	-	-	-	-	-	-	-	-	-	30,522
Gasprom Net Cash Flow	14,869	15,464	16,083	16,726	17,395	18,091	18,815	19,567	24,065	190,430
Real Gasprom Net Cash Flow	9,378	9,378	9,378	9,378	9,378	9,378	9,378	9,378	11,090	102,425
Gasprom Real Return on Equity										
FOREIGN INVESTOR RETURNS										
Foreign Share of Common Stock	50%	50%	50%	50%	50%	50%	50%	50%	50%	
CS Dividends	89,217	92,786	96,497	100,357	104,371	108,546	112,888	117,403	144,392	1,325,716
Foreign CS Dividends	44,608	46,393	48,248	50,178	52,186	54,273	56,444	58,702	72,196	662,858
Foreign CS Dividends	44,608	46,393	48,248	50,178	52,186	54,273	56,444	58,702	72,196	662,858
Less: Foreign Equity	-	-	-	-	-	-	-	-	-	91,567
Less: Additional Equity Investment	-	-	-	-	-	-	-	-	-	-
Foreign Net Cash Flow	44,608	46,393	48,248	50,178	52,186	54,273	56,444	58,702	72,196	571,291
Real Foreign Cash Flow	28,134	28,134	28,134	28,134	28,134	28,134	28,134	28,134	33,271	307,276
Foreign Real Return on Equity										

1835
245

SIBERIAN GAS PROCESSING PLANT
Data and Key Results

TIMING DATA

Cost Estimate Month	Oct 93	First, Last Operation Month	Jan 96 Dec 15
Financial Closing Month	Jan 95	Economic Life	20.00

ENGINEERING DATA

	1994	1995	1996	1997	1998	1999	2000	2001
Rated Capacity (BCM/yr)in 1996, 1998	2.14	4.28						
Stream Factor		-	100%	100%	100%	100%	100%	100%
Operations Partial Year Factor	-	-	1.000	1.000	1.000	100%	100%	100%
Wet Gas Processed (MCM)	-	-	2.14	2.14	4.28	4.28	4.28	4.28
Dry Gas Production (BCM)	-	-	1.80	1.91	3.77	3.78	3.81	3.84
NGL Production (MMTons)	-	-	0.37	0.48	1.07	1.05	0.98	0.92

REVENUE DATA (1996 $'s)

NGL Domestic Price ($/Ton)	67.86	Domestic Gas Price ($/MCM)	17.09
NGL Export Price ($/Ton)	144.00	Export Gas Price ($/MCM)	90.00
% NGL for Export	100%	% Dry Gas for Export	100%

OPERATING COST DATA (1993 $000's)

			TRANSPORT COSTS (1996 $'s)	DOM	EXP
Wet Gas Feedstock Cost ($/MCM)	-		Dry Gas In-Russia Costs ($/MCM)	-	40.00
Chemicals Cost	382		Dry Gas Export Costs		32.00
Utility Cost	19,432		NGL In-Russia Costs ($/Ton)	1.94	36.55
Maintenance Cost	985		NGL Pipeline Costs	43.52	43.52
Labor Cost, Benefits	1,364	518	NGL Port Loading Charge		1.62
Other Expenses	10,134		NGL Shipping Cost		15.10

CAPITAL COST DATA (1993 $000's)

	1995	1996	1997	Total
Gubkinsky GPP Expansion	43,700	157,500	90,300	291,500
Tarasovsky Gas Processing Plant	-	-	-	-
Gas Gathering Systems Cost	17,900	53,700	40,200	111,800
Metering Facilities Cost	440	1,290	970	2,700
Contributed Assets	9,841	21,569	10,726	42,136
Other Owners Costs	8,000	-	-	8,000
Infrastructure Costs	9,306	31,874	19,721	60,900
Initial Working Capital	2,839	-	-	2,839
Capital Costs	92,026	265,933	161,917	519,875

WORKING CAPITAL DATA

Days Receivables	45
Days Payables	45

FINANCING DATA

	WB/Other Loan	
% of Permanent Financing	70%	
Loan Amount, Commitment	419,678	419,680
Loan Interest Rate	8.15%	
Start of Repayment, Repayment Period	Jan 98	9.0
Commitment Fees %	0.25%	
Upfront Fee %	-	
Other Fin Fees & [redacted] Costs (%, Amt)	-	

KEY RESULTS SUMMARY

Real Return on Investment (no taxes)	12.6%
Unleveraged Payback (Yrs)	5.1
Nominal NPV (Oct '93) @ 15.0%	25,418
Real Return on Equity	9.5%
Leveraged Payback (Yrs)	8.2
Nominal NPV (Oct '93) @ 15.0%	(16,563)
Min Debt Service Coverage	117%
Average Debt Service Coverage	138%

FINANCING DATA (cont'd)

	Actual
Required Reserves (1st Operating Yr)	39,226
Cash Flow Dedicated to Reserves	100%
Reinvestment Rate	3.0%

TAX DATA

Tax & Book In Service Month	Jan 96
Profits Tax	32.00%
15% Yr SL Property %	100.0%
Carryforward Years	5
VAT Tax (% of CapEx)	20.0%
Property Tax (% of Fixed Assets)	-
Road Tax (% of Revenues)	0.4%
Dry Gas Export Tariff ('93 $/MCM)	-
NGL Export Tariff ('93 $/Ton)	-

ECONOMIC DATA

Global Inflation Rate	2.8% **
Capital Cost Esc Rate	2.8%
O&M Esc Rate	2.8%
Export Gas Price Esc Rate	2.8%
Domestic Gas Price Esc Rate	2.8%
Export NGL Price Esc Rate	2.8%
Domestic NGL Price Esc Rate	2.8%

** Until 2000, 4% thereafter
(all escalation equivalent to inflation)

SENSITIVITY ANALYSIS FACTORS

O&M Cost	1.00
Gas Price	1.00
NGL Price	1.00
Capital Cost	1.00
Transport Cost	1.00
Wet Gas Price	1.00

SIBERIAN GAS PROCESSING PLANT
Annual Sources and Uses of Funds During Construction

($US Thousands)

	1995	1996	1997	Total	%
SOURCES OF FUNDS					
World Bank/Other Loan	68,885	207,279	143,515	419,678	70%
SIBNG Cash Equity	-	-	-	-	-
PNG Cash Equity	-	-	-	-	-
Gasprom Cash Equity	4,920	10,784	5,363	21,068	4%
SIBNG Equity	4,920	10,784	5,363	21,068	4%
PNG Equity	4,920	10,784	5,363	21,068	4%
Foreign Equity	14,761	32,353	16,089	63,204	11%
JV Operating Cash Flow	-	24,127	29,328	53,455	9%
Total Sources of Funds	98,407	296,113	205,021	599,540	100%
USES OF FUNDS					
Gubkinsky GPP Expansion	45,950	169,606	99,266	314,821	
Tarasovsky Gas Processing Plant	-	-	-	-	
Gas Gathering Systems Cost	18,820	57,765	44,281	120,866	
Metering Facilities Costs	463	1,388	1,068	2,919	
Infrastructure Costs	9,785	34,314	21,692	65,791	
Contributed Assets	9,841	21,569	10,726	42,136	
Other Owners Costs	8,281	-	-	8,281	
Initial Working Capital	3,000	-	-	3,000	
Capital Costs	96,139	284,641	177,034	557,813	93%
Other Loan Interest	1,260	10,763	27,817	39,840	
Other Loan Commitment Fees	1,008	708	170	1,887	
Upfront Fees	-	-	-	-	
Financing Costs	2,268	11,472	27,987	41,727	7%
Total Uses of Funds	98,407	296,113	205,021	599,540	100%

	$	%
Total Debt	419,678	70%
Operating Cash	53,455	9%
Equity Requirement	126,408	21%
	599,540	100%

MEMORANDA	WB/Other Loan	
Loan Draws, Amount	419,678	
Standby Facility	-	
Constr Loan Draws + Standby, Commitment	419,678	419,680
Constr Loan Int Rate	8.15%	
Commitment Fee Rate	0.25%	
Upfront Fee Rate	-	
Other Financing Fees (%, Amt)	-	
Repayment Period	9.0	

** NOTE: ANNUAL SANDU STATEMENT IS FOR PRESENTATION ONLY. VALUES ARE FROM QUARTERLY CALCULATIONS.

VAT TAX FUNDING				
VAT Tax	15,003	52,614	33,262	100,879
VAT Recovery Expressed in $'s	435	8,945	30,692	40,072
Net VAT Payment	14,569	43,669	2,570	60,807
PNG Cash Equity for VAT	2,428	7,278	428	10,135
SNGP Cash Equity for VAT	2,428	7,278	428	10,135
Gasprom Cash Equity for VAT	2,428	7,278	428	10,135
Foreign Equity for VAT	7,284	21,834	1,285	30,404
Cash Equity for VAT	14,569	43,669	2,570	60,807

Equity Requirement	126,408
Equity for VAT	60,807
Total Equity	187,215

1637

247

REVISED CASE 1B.1: Wet Gas = $0; Expected Tax; Avg NGL Production

SIBERIAN GAS PROCESSING PLANT
Equity Returns

(Thousands)

	1994	1995	1996	1997	1998	1999	2000	2001	2002	2003	2004	2005	2006
EQUITY INVESTMENT													
SNGP Equity	-	7,348	18,063	5,791	-	-	-	-	-	-	-	-	-
PNG Equity	-	7,348	18,063	5,791	-	-	-	-	-	-	-	-	-
Gasprom Equity	-	7,348	18,063	5,791	-	-	-	-	-	-	-	-	-
Foreign Equity	-	22,045	54,188	17,374	-	-	-	-	-	-	-	-	-
Additional Equity	-	-	-	-	-	-	-	-	-	-	-	-	-
Total Equity	-	44,091	108,376	34,748	-	-	-	-	-	-	-	-	-
CUMULATIVE EQUITY INVESTMENT													
SNGP Equity Holdings	-	7,348	25,411	31,203	31,203	31,203	31,203	31,203	31,203	31,203	31,203	31,203	31,203
PNG Equity Holdings	-	7,348	25,411	31,203	31,203	31,203	31,203	31,203	31,203	31,203	31,203	31,203	31,203
Gasprom Equity Holdings	-	7,348	25,411	31,203	31,203	31,203	31,203	31,203	31,203	31,203	31,203	31,203	31,203
Foreign Equity Holdings	-	22,045	76,233	93,608	93,608	93,608	93,608	93,608	93,608	93,608	93,608	93,608	93,608
CS Equity Position	-	44,091	152,467	187,215	187,215	187,215	187,215	187,215	187,215	187,215	187,215	187,215	187,215
PROJECT RETURN ON EQUITY													
CS Dividends	-	-	-	-	-	12,128	29,123	22,766	26,978	31,165	30,418	25,042	39,211
Less: Equity Investment	-	44,091	108,376	34,748	-	-	-	-	-	-	-	-	-
Net Cash Flow	-	(44,091)	(108,376)	(34,748)	-	12,128	29,123	22,766	26,978	31,165	30,418	25,042	39,211
Cumulative	-	(44,091)	(152,467)	(187,215)	(187,215)	(175,087)	(145,965)	(123,199)	(96,220)	(65,055)	(34,637)	(9,594)	29,617
Real Net Cash Flow	-	(42,011)	(100,450)	(31,330)	-	10,347	24,170	18,168	20,701	22,994	21,580	17,083	25,719
Real Return on Equity	9.5%												

SIBERIAN GAS PROCESSING PLANT
Equity Returns

(Thousands)

	1994	1995	1996	1997	1998	1999	2000	2001	2002	2003	2004	2005	2006
SNGP RETURNS													
SNGP Share of Common Stock		17%	17%	17%	17%	17%	17%	17%	17%	17%	17%	17%	17%
CS Dividends	-	-	-	-	-	12,128	29,123	22,766	26,978	31,165	30,418	25,042	39,211
SNGP CS Dividends		-	-	-	-	2,021	4,854	3,794	4,496	5,194	5,070	4,174	6,535
SNGP CS Dividends		-	-	-	-	2,021	4,854	3,794	4,496	5,194	5,070	4,174	6,535
Plus: SNGP NGL Pipeline Marginal Profit	-	-	-	-	-	-	-	-	-	-	-	-	-
Less: SNGP Equity	-	7,348	18,063	5,791	-	-	-	-	-	-	-	-	-
SNGP Net Cash Flow	-	(7,348)	(18,063)	(5,791)	-	2,021	4,854	3,794	4,496	5,194	5,070	4,174	6,535
Real SNGP Net Cash Flow	-	(7,002)	(16,742)	(5,222)	-	1,725	4,028	3,028	3,450	3,832	3,597	2,847	4,287
SNGP Real Return on Equity	9.5%												
PNG RETURNS													
PNG Share of Common Stock		17%	17%	17%	17%	17%	17%	17%	17%	17%	17%	17%	17%
CS Dividends	-	-	-	-	-	12,128	29,123	22,766	26,978	31,165	30,418	25,042	39,211
PNG CS Dividends		-	-	-	-	2,021	4,854	3,794	4,496	5,194	5,070	4,174	6,535
PNG CS Dividends		-	-	-	-	2,021	4,854	3,794	4,496	5,194	5,070	4,174	6,535
Plus: PNG Wet Gas Marginal Profit	-	-	-	-	-	-	-	-	-	-	-	-	-
Less: PNG Equity	-	7,348	18,063	5,791	-	-	-	-	-	-	-	-	-
PNG Net Cash Flow	-	(7,348)	(18,063)	(5,791)	-	2,021	4,854	3,794	4,496	5,194	5,070	4,174	6,535
Real PNG Net Cash Flow	-	(7,002)	(16,742)	(5,222)	-	1,725	4,028	3,028	3,450	3,832	3,597	2,847	4,287
PNG Real Return on Equity	9.5%												
GASPROM RETURNS													
Gasprom Share of Common Stock		17%	17%	17%	17%	17%	17%	17%	17%	17%	17%	17%	17%
CS Dividends	-	-	-	-	-	12,128	29,123	22,766	26,978	31,165	30,418	25,042	39,211
Gasprom CS Dividends		-	-	-	-	2,021	4,854	3,794	4,496	5,194	5,070	4,174	6,535
Gasprom CS Dividends		-	-	-	-	2,021	4,854	3,794	4,496	5,194	5,070	4,174	6,535
Plus: Gasprom Transport Marginal Profit	-	-	-	-	-	-	-	-	-	-	-	-	-
Less: Gasprom Equity	-	7,348	18,063	5,791	-	-	-	-	-	-	-	-	-
Gasprom Net Cash Flow	-	(7,348)	(18,063)	(5,791)	-	2,021	4,854	3,794	4,496	5,194	5,070	4,174	6,535
Real Gasprom Net Cash Flow	-	(7,002)	(16,742)	(5,222)	-	1,725	4,028	3,028	3,450	3,832	3,597	2,847	4,287
Gasprom Real Return on Equity	9.5%												
FOREIGN INVESTOR RETURNS													
Foreign Share of Common Stock		50%	50%	50%	50%	50%	50%	50%	50%	50%	50%	50%	50%
CS Dividends	-	-	-	-	-	12,128	29,123	22,766	26,978	31,165	30,418	25,042	39,211
Foreign CS Dividends		-	-	-	-	6,064	14,561	11,383	13,489	15,583	15,209	12,521	19,606
Foreign CS Dividends		-	-	-	-	6,064	14,561	11,383	13,489	15,583	15,209	12,521	19,606
Less: Foreign Equity	-	22,045	54,188	17,374	-	-	-	-	-	-	-	-	-
Less: Additional Equity Investment	-	-	-	-	-	-	-	-	-	-	-	-	-
Foreign Net Cash Flow	-	(22,045)	(54,188)	(17,374)	-	6,064	14,561	11,383	13,489	15,583	15,209	12,521	19,606
Real Foreign Cash Flow	-	(21,005)	(50,225)	(15,665)	-	5,174	12,085	9,084	10,351	11,497	10,790	8,541	12,860
Foreign Real Return on Equity	9.5%												

SIBERIAN GAS PROCESSING PLANT
Equity Returns

(Thousands)

	2007	2008	2009	2010	2011	2012	2013	2014	2015	Total
EQUITY INVESTMENT										
SNGP Equity	-	-	-	-	-	-	-	-	-	31,203
PNG Equity	-	-	-	-	-	-	-	-	-	31,203
Gasprom Equity	-	-	-	-	-	-	-	-	-	31,203
Foreign Equity	-	-	-	-	-	-	-	-	-	93,608
Additional Equity	-	-	-	-	-	-	-	-	-	-
Total Equity	-	-	-	-	-	-	-	-	-	187,215
CUMULATIVE EQUITY INVESTMENT										
SNGP Equity Holdings	31,203	31,203	31,203	31,203	31,203	31,203	31,203	31,203	31,203	
PNG Equity Holdings	31,203	31,203	31,203	31,203	31,203	31,203	31,203	31,203	31,203	
Gasprom Equity Holdings	31,203	31,203	31,203	31,203	31,203	31,203	31,203	31,203	31,203	
Foreign Equity Holdings	93,608	93,608	93,608	93,608	93,608	93,608	93,608	93,608	93,608	
CS Equity Position	187,215	187,215	187,215	187,215	187,215	187,215	187,215	187,215	187,215	
PROJECT RETURN ON EQUITY										
CS Dividends	62,007	63,173	63,875	64,256	64,976	66,213	66,883	68,045	81,962	818,221
Less: Equity Investment	-	-	-	-	-	-	-	-	-	187,215
Net Cash Flow	62,007	63,173	63,875	64,256	64,976	66,213	66,883	68,045	81,962	631,006
Cumulative	91,624	154,797	218,671	282,927	347,903	414,116	480,999	549,044	631,006	
Real Net Cash Flow	39,107	38,310	37,246	36,027	35,029	34,323	33,337	32,612	37,771	310,733
Real Return on Equity										

SIBERIAN GAS PROCESSING PLANT
Equity Returns

(Thousands)

	2007	2008	2009	2010	2011	2012	2013	2014	2015	Total
SNGP RETURNS										
SNGP Share of Common Stock	17%	17%	17%	17%	17%	17%	17%	17%	17%	
CS Dividends	62,007	63,173	63,875	64,256	64,976	66,213	66,883	68,045	81,962	818,221
SNGP CS Dividends	10,334	10,529	10,646	10,709	10,829	11,036	11,147	11,341	13,660	136,370
SNGP CS Dividends	10,334	10,529	10,646	10,709	10,829	11,036	11,147	11,341	13,660	136,370
Plus: SNGP NGL Pipeline Marginal Profit	-	-	-	-	-	-	-	-	-	-
Less: SNGP Equity	-	-	-	-	-	-	-	-	-	31,203
SNGP Net Cash Flow	10,334	10,529	10,646	10,709	10,829	11,036	11,147	11,341	13,660	105,168
Real SNGP Net Cash Flow	6,518	6,385	6,208	6,004	5,838	5,721	5,556	5,435	6,295	51,789
SNGP Real Return on Equity										
PNG RETURNS										
PNG Share of Common Stock	17%	17%	17%	17%	17%	17%	17%	17%	17%	
CS Dividends	62,007	63,173	63,875	64,256	64,976	66,213	66,883	68,045	81,962	818,221
PNG CS Dividends	10,334	10,529	10,646	10,709	10,829	11,036	11,147	11,341	13,660	136,370
PNG CS Dividends	10,334	10,529	10,646	10,709	10,829	11,036	11,147	11,341	13,660	136,370
Plus: PNG Wet Gas Marginal Profit	-	-	-	-	-	-	-	-	-	-
Less: PNG Equity	-	-	-	-	-	-	-	-	-	31,203
PNG Net Cash Flow	10,334	10,529	10,646	10,709	10,829	11,036	11,147	11,341	13,660	105,168
Real PNG Net Cash Flow	6,518	6,385	6,208	6,004	5,838	5,721	5,556	5,435	6,295	51,789
PNG Real Return on Equity										
GASPROM RETURNS										
Gasprom Share of Common Stock	17%	17%	17%	17%	17%	17%	17%	17%	17%	
CS Dividends	62,007	63,173	63,875	64,256	64,976	66,213	66,883	68,045	81,962	818,221
Gasprom CS Dividends	10,334	10,529	10,646	10,709	10,829	11,036	11,147	11,341	13,660	136,370
Gasprom CS Dividends	10,334	10,529	10,646	10,709	10,829	11,036	11,147	11,341	13,660	136,370
Plus: Gasprom Transport Marginal Profit	-	-	-	-	-	-	-	-	-	-
Less: Gasprom Equity	-	-	-	-	-	-	-	-	-	31,203
Gasprom Net Cash Flow	10,334	10,529	10,646	10,709	10,829	11,036	11,147	11,341	13,660	105,168
Real Gasprom Net Cash Flow	6,518	6,385	6,208	6,004	5,838	5,721	5,556	5,435	6,295	51,789
Gasprom Real Return on Equity										
FOREIGN INVESTOR RETURNS										
Foreign Share of Common Stock	50%	50%	50%	50%	50%	50%	50%	50%	50%	
CS Dividends	62,007	63,173	63,875	64,256	64,976	66,213	66,883	68,045	81,962	818,221
Foreign CS Dividends	31,003	31,586	31,937	32,128	32,488	33,107	33,441	34,023	40,981	409,111
Foreign CS Dividends	31,003	31,586	31,937	32,128	32,488	33,107	33,441	34,023	40,981	409,111
Less: Foreign Equity	-	-	-	-	-	-	-	-	-	93,608
Less: Additional Equity Investment	-	-	-	-	-	-	-	-	-	-
Foreign Net Cash Flow	31,003	31,586	31,937	32,128	32,488	33,107	33,441	34,023	40,981	315,503
Real Foreign Cash Flow	19,553	19,155	18,623	18,013	17,515	17,162	16,669	16,306	18,886	155,366
Foreign Real Return on Equity										

1941
251

REVISED CASE 1B.1: Wet Gas = $0; Expected Tax; Gasprom Profit @ 50%

SIBERIAN GAS PROCESSING PLANT
Equity Returns

(Thousands)

	1994	1995	1996	1997	1998	1999	2000	2001	2002	2003	2004	2005	2006
EQUITY INVESTMENT													
SNGP Equity	-	7,349	18,130	5,791	-	-	-	-	-	-	-	-	-
PNG Equity	-	7,349	18,130	5,791	-	-	-	-	-	-	-	-	-
Gasprom Equity	-	7,349	18,130	5,791	-	-	-	-	-	-	-	-	-
Foreign Equity	-	22,046	54,391	17,374	-	-	-	-	-	-	-	-	-
Additional Equity	-	-	-	-	-	-	-	-	-	-	-	-	-
Total Equity	-	44,091	108,782	34,749	-	-	-	-	-	-	-	-	-
CUMULATIVE EQUITY INVESTMENT													
SNGP Equity Holdings	-	7,349	25,479	31,270	31,270	31,270	31,270	31,270	31,270	31,270	31,270	31,270	31,270
PNG Equity Holdings	-	7,349	25,479	31,270	31,270	31,270	31,270	31,270	31,270	31,270	31,270	31,270	31,270
Gasprom Equity Holdings	-	7,349	25,479	31,270	31,270	31,270	31,270	31,270	31,270	31,270	31,270	31,270	31,270
Foreign Equity Holdings	-	22,046	76,437	93,811	93,811	93,811	93,811	93,811	93,811	93,811	93,811	93,811	93,811
CS Equity Position	-	44,091	152,873	187,622	187,622	187,622	187,622	187,622	187,622	187,622	187,622	187,622	187,622
PROJECT RETURN ON EQUITY													
CS Dividends	-	-	-	-	-	11,986	32,169	28,621	35,983	41,376	43,783	29,594	53,669
Less: Equity Investment	-	44,091	108,782	34,749	-	-	-	-	-	-	-	-	-
Net Cash Flow	-	(44,091)	(108,782)	(34,749)	-	11,986	32,169	28,621	35,983	41,376	43,783	29,594	53,669
Cumulative	-	(44,091)	(152,873)	(187,622)	(187,622)	(175,636)	(143,467)	(114,846)	(78,863)	(37,487)	6,296	35,890	89,558
Real Net Cash Flow	-	(42,011)	(100,827)	(31,330)	-	10,226	26,698	22,840	27,611	30,527	31,061	20,188	35,202
Real Return on Equity	12.5%												

SIBERIAN GAS PROCESSING PLANT
Equity Returns

(Thousands)

	1994	1995	1996	1997	1998	1999	2000	2001	2002	2003	2004	2005	2006
SNGP RETURNS													
SNGP Share of Common Stock		17%	17%	17%	17%	17%	17%	17%	17%	17%	17%	17%	17%
CS Dividends	-	-	-	-	-	11,986	32,169	28,621	35,983	41,376	43,783	29,594	53,669
SNGP CS Dividends		-	-	-	-	1,998	5,361	4,770	5,997	6,896	7,297	4,932	8,945
SNGP CS Dividends		-	-	-	-	1,998	5,361	4,770	5,997	6,896	7,297	4,932	8,945
Plus: SNGP NGL Pipeline Marginal Profit	-	-	-	-	-	-	-	-	-	-	-	-	-
Less: SNGP Equity	-	7,349	18,130	5,791	-	-	-	-	-	-	-	-	-
SNGP Net Cash Flow	-	(7,349)	(18,130)	(5,791)	-	1,998	5,361	4,770	5,997	6,896	7,297	4,932	8,945
Real SNGP Net Cash Flow	-	(7,002)	(16,805)	(5,222)	-	1,704	4,450	3,807	4,602	5,088	5,177	3,365	5,867
SNGP Real Return on Equity	12.5%												
PNG RETURNS													
PNG Share of Common Stock		17%	17%	17%	17%	17%	17%	17%	17%	17%	17%	17%	17%
CS Dividends	-	-	-	-	-	11,986	32,169	28,621	35,983	41,376	43,783	29,594	53,669
PNG CS Dividends		-	-	-	-	1,998	5,361	4,770	5,997	6,896	7,297	4,932	8,945
PNG CS Dividends		-	-	-	-	1,998	5,361	4,770	5,997	6,896	7,297	4,932	8,945
Plus: PNG Wet Gas Marginal Profit	-	-	-	-	-	-	-	-	-	-	-	-	-
Less: PNG Equity	-	7,349	18,130	5,791	-	-	-	-	-	-	-	-	-
PNG Net Cash Flow	-	(7,349)	(18,130)	(5,791)	-	1,998	5,361	4,770	5,997	6,896	7,297	4,932	8,945
Real PNG Net Cash Flow	-	(7,002)	(16,805)	(5,222)	-	1,704	4,450	3,807	4,602	5,088	5,177	3,365	5,867
PNG Real Return on Equity	12.5%												
GASPROM RETURNS													
Gasprom Share of Common Stock		17%	17%	17%	17%	17%	17%	17%	17%	17%	17%	17%	17%
CS Dividends	-	-	-	-	-	11,986	32,169	28,621	35,983	41,376	43,783	29,594	53,669
Gasprom CS Dividends		-	-	-	-	1,998	5,361	4,770	5,997	6,896	7,297	4,932	8,945
Gasprom CS Dividends		-	-	-	-	1,998	5,361	4,770	5,997	6,896	7,297	4,932	8,945
Plus: Gasprom Transport Marginal Profit	-	-	36,047	39,164	79,464	81,689	83,976	87,335	90,829	94,462	98,241	102,170	106,257
Less: Gasprom Equity	-	7,349	18,130	5,791	-	-	-	-	-	-	-	-	-
Gasprom Net Cash Flow	-	(7,349)	17,917	33,372	79,464	83,687	89,338	92,106	96,826	101,358	105,538	107,103	115,202
Real Gasprom Net Cash Flow	-	(7,002)	16,607	30,089	69,695	71,400	74,145	73,502	74,297	74,783	74,872	73,060	75,562
Gasprom Real Return on Equity	316.5%												
FOREIGN INVESTOR RETURNS													
Foreign Share of Common Stock		50%	50%	50%	50%	50%	50%	50%	50%	50%	50%	50%	50%
CS Dividends	-	-	-	-	-	11,986	32,169	28,621	35,983	41,376	43,783	29,594	53,669
Foreign CS Dividends		-	-	-	-	5,993	16,084	14,311	17,991	20,688	21,892	14,797	26,834
Foreign CS Dividends		-	-	-	-	5,993	16,084	14,311	17,991	20,688	21,892	14,797	26,834
Less: Foreign Equity	-	22,046	54,391	17,374	-	-	-	-	-	-	-	-	-
Less: Additional Equity Investment	-	-	-	-	-	-	-	-	-	-	-	-	-
Foreign Net Cash Flow	-	(22,046)	(54,391)	(17,374)	-	5,993	16,084	14,311	17,991	20,688	21,892	14,797	26,834
Real Foreign Cash Flow	-	(21,005)	(50,414)	(15,665)	-	5,113	13,349	11,420	13,805	15,264	15,531	10,094	17,601
Foreign Real Return on Equity	12.5%												

1464 253

REVISED CASE 1B.1: Wet Gas = $0; Expected Tax; Gasprom Profit @ 50%

SIBERIAN GAS PROCESSING PLANT
Equity Returns

(Thousands)

	2007	2008	2009	2010	2011	2012	2013	2014	2015	Total
EQUITY INVESTMENT										
SNGP Equity	-	-	-	-	-	-	-	-	-	31,270
PNG Equity	-	-	-	-	-	-	-	-	-	31,270
Gasprom Equity	-	-	-	-	-	-	-	-	-	31,270
Foreign Equity	-	-	-	-	-	-	-	-	-	93,811
Additional Equity	-	-	-	-	-	-	-	-	-	-
Total Equity	-	-	-	-	-	-	-	-	-	187,622
CUMULATIVE EQUITY INVESTMENT										
SNGP Equity Holdings	31,270	31,270	31,270	31,270	31,270	31,270	31,270	31,270	31,270	
PNG Equity Holdings	31,270	31,270	31,270	31,270	31,270	31,270	31,270	31,270	31,270	
Gasprom Equity Holdings	31,270	31,270	31,270	31,270	31,270	31,270	31,270	31,270	31,270	
Foreign Equity Holdings	93,811	93,811	93,811	93,811	93,811	93,811	93,811	93,811	93,811	
CS Equity Position	187,622	187,622	187,622	187,622	187,622	187,622	187,622	187,622	187,622	
PROJECT RETURN ON EQUITY										
CS Dividends	79,982	83,181	86,508	89,969	93,567	97,310	101,203	105,251	129,446	1,143,597
Less: Equity Investment	-	-	-	-	-	-	-	-	-	187,622
Net Cash Flow	79,982	83,181	86,508	89,969	93,567	97,310	101,203	105,251	129,446	955,975
Cumulative	169,540	252,721	339,230	429,198	522,766	620,076	721,279	826,529	955,975	
Real Net Cash Flow	50,443	50,443	50,443	50,443	50,443	50,443	50,443	50,443	59,653	493,386
Real Return on Equity										

SIBERIAN GAS PROCESSING PLANT
Equity Returns

(Thousands)

	2007	2008	2009	2010	2011	2012	2013	2014	2015	Total
SNGP RETURNS										
SNGP Share of Common Stock	17%	17%	17%	17%	17%	17%	17%	17%	17%	
CS Dividends	79,982	83,181	86,508	89,969	93,567	97,310	101,203	105,251	129,446	1,143,597
SNGP CS Dividends	13,330	13,864	14,418	14,995	15,595	16,218	16,867	17,542	21,574	190,599
SNGP CS Dividends	13,330	13,864	14,418	14,995	15,595	16,218	16,867	17,542	21,574	190,599
Plus: SNGP NGL Pipeline Marginal Profit	-	-	-	-	-	-	-	-	-	-
Less: SNGP Equity	-	-	-	-	-	-	-	-	-	31,270
SNGP Net Cash Flow	13,330	13,864	14,418	14,995	15,595	16,218	16,867	17,542	21,574	159,329
Real SNGP Net Cash Flow	8,407	8,407	8,407	8,407	8,407	8,407	8,407	8,407	9,942	82,231
SNGP Real Return on Equity										
PNG RETURNS										
PNG Share of Common Stock	17%	17%	17%	17%	17%	17%	17%	17%	17%	
CS Dividends	79,982	83,181	86,508	89,969	93,567	97,310	101,203	105,251	129,446	1,143,597
PNG CS Dividends	13,330	13,864	14,418	14,995	15,595	16,218	16,867	17,542	21,574	190,599
PNG CS Dividends	13,330	13,864	14,418	14,995	15,595	16,218	16,867	17,542	21,574	190,599
Plus: PNG Wet Gas Marginal Profit	-	-	-	-	-	-	-	-	-	-
Less: PNG Equity	-	-	-	-	-	-	-	-	-	31,270
PNG Net Cash Flow	13,330	13,864	14,418	14,995	15,595	16,218	16,867	17,542	21,574	159,329
Real PNG Net Cash Flow	8,407	8,407	8,407	8,407	8,407	8,407	8,407	8,407	9,942	82,231
PNG Real Return on Equity										
GASPROM RETURNS										
Gasprom Share of Common Stock	17%	17%	17%	17%	17%	17%	17%	17%	17%	
CS Dividends	79,982	83,181	86,508	89,969	93,567	97,310	101,203	105,251	129,446	1,143,597
Gasprom CS Dividends	13,330	13,864	14,418	14,995	15,595	16,218	16,867	17,542	21,574	190,599
Gasprom CS Dividends	13,330	13,864	14,418	14,995	15,595	16,218	16,867	17,542	21,574	190,599
Plus: Gasprom Transport Marginal Profit	110,507	114,928	119,525	124,306	129,278	134,449	139,827	145,420	151,237	2,069,111
Less: Gasprom Equity	-	-	-	-	-	-	-	-	-	31,270
Gasprom Net Cash Flow	123,838	128,791	133,943	139,300	144,872	150,667	156,694	162,962	172,811	2,228,440
Real Gasprom Net Cash Flow	78,103	78,103	78,103	78,103	78,103	78,103	78,103	78,103	79,638	1,405,470
Gasprom Real Return on Equity										
FOREIGN INVESTOR RETURNS										
Foreign Share of Common Stock	50%	50%	50%	50%	50%	50%	50%	50%	50%	
CS Dividends	79,982	83,181	86,508	89,969	93,567	97,310	101,203	105,251	129,446	1,143,597
Foreign CS Dividends	39,991	41,591	43,254	44,984	46,784	48,655	50,601	52,625	64,723	571,798
Foreign CS Dividends	39,991	41,591	43,254	44,984	46,784	48,655	50,601	52,625	64,723	571,798
Less: Foreign Equity	-	-	-	-	-	-	-	-	-	93,811
Less: Additional Equity Investment	-	-	-	-	-	-	-	-	-	-
Foreign Net Cash Flow	39,991	41,591	43,254	44,984	46,784	48,655	50,601	52,625	64,723	477,988
Real Foreign Cash Flow	25,222	25,222	25,222	25,222	25,222	25,222	25,222	25,222	29,827	246,693
Foreign Real Return on Equity										

1846

1896

REVISED CASE 1B.1: Wet Gas = $0; Expected Tax; Gasprom Profit @ 25%

SIBERIAN GAS PROCESSING PLANT
Equity Returns

(Thousands)

	1994	1995	1996	1997	1998	1999	2000	2001	2002	2003	2004	2005	2006
EQUITY INVESTMENT													
SNGP Equity	-	7,349	18,130	5,791	-	-	-	-	-	-	-	-	-
PNG Equity	-	7,349	18,130	5,791	-	-	-	-	-	-	-	-	-
Gasprom Equity	-	7,349	18,130	5,791	-	-	-	-	-	-	-	-	-
Foreign Equity	-	22,046	54,391	17,374	-	-	-	-	-	-	-	-	-
Additional Equity	-	-	-	-	-	-	-	-	-	-	-	-	-
Total Equity	-	44,091	108,782	34,749	-	-	-	-	-	-	-	-	-
CUMULATIVE EQUITY INVESTMENT													
SNGP Equity Holdings	-	7,349	25,479	31,270	31,270	31,270	31,270	31,270	31,270	31,270	31,270	31,270	31,270
PNG Equity Holdings	-	7,349	25,479	31,270	31,270	31,270	31,270	31,270	31,270	31,270	31,270	31,270	31,270
Gasprom Equity Holdings	-	7,349	25,479	31,270	31,270	31,270	31,270	31,270	31,270	31,270	31,270	31,270	31,270
Foreign Equity Holdings	-	22,046	76,437	93,811	93,811	93,811	93,811	93,811	93,811	93,811	93,811	93,811	93,811
CS Equity Position	-	44,091	152,873	187,622	187,622	187,622	187,622	187,622	187,622	187,622	187,622	187,622	187,622
PROJECT RETURN ON EQUITY													
CS Dividends	-	-	-	-	-	11,986	32,169	28,621	35,983	41,376	43,783	29,594	53,669
Less: Equity Investment	-	44,091	108,782	34,749	-	-	-	-	-	-	-	-	-
Net Cash Flow	-	(44,091)	(108,782)	(34,749)	-	11,986	32,169	28,621	35,983	41,376	43,783	29,594	53,669
Cumulative	-	(44,091)	(152,873)	(187,622)	(187,622)	(175,636)	(143,467)	(114,846)	(78,863)	(37,487)	6,296	35,890	89,558
Real Net Cash Flow	-	(42,011)	(100,827)	(31,330)	-	10,226	26,698	22,840	27,611	30,527	31,061	20,188	35,202
Real Return on Equity	12.5%												

256

SIBERIAN GAS PROCESSING PLANT
Equity Returns

(Thousands)

	1994	1995	1996	1997	1998	1999	2000	2001	2002	2003	2004	2005	2006
SNGP RETURNS													
SNGP Share of Common Stock		17%	17%	17%	17%	17%	17%	17%	17%	17%	17%	17%	17%
CS Dividends	-	-	-	-	-	11,986	32,169	28,621	35,983	41,376	43,783	29,594	53,669
SNGP CS Dividends		-	-	-	-	1,998	5,361	4,770	5,997	6,896	7,297	4,932	8,945
SNGP CS Dividends		-	-	-	-	1,998	5,361	4,770	5,997	6,896	7,297	4,932	8,945
Plus: SNGP NGL Pipeline Marginal Profit	-	-	-	-	-	-	-	-	-	-	-	-	-
Less: SNGP Equity	-	7,349	18,130	5,791	-	-	-	-	-	-	-	-	-
SNGP Net Cash Flow	-	(7,349)	(18,130)	(5,791)	-	1,998	5,361	4,770	5,997	6,896	7,297	4,932	8,945
Real SNGP Net Cash Flow	-	(7,002)	(16,805)	(5,222)	-	1,704	4,450	3,807	4,602	5,088	5,177	3,365	5,867
SNGP Real Return on Equity	12.5%												
PNG RETURNS													
PNG Share of Common Stock		17%	17%	17%	17%	17%	17%	17%	17%	17%	17%	17%	17%
CS Dividends	-	-	-	-	-	11,986	32,169	28,621	35,983	41,376	43,783	29,594	53,669
PNG CS Dividends		-	-	-	-	1,998	5,361	4,770	5,997	6,896	7,297	4,932	8,945
PNG CS Dividends		-	-	-	-	1,998	5,361	4,770	5,997	6,896	7,297	4,932	8,945
Plus: PNG Wet Gas Marginal Profit	-	-	-	-	-	-	-	-	-	-	-	-	-
Less: PNG Equity	-	7,349	18,130	5,791	-	-	-	-	-	-	-	-	-
PNG Net Cash Flow	-	(7,349)	(18,130)	(5,791)	-	1,998	5,361	4,770	5,997	6,896	7,297	4,932	8,945
Real PNG Net Cash Flow	-	(7,002)	(16,805)	(5,222)	-	1,704	4,450	3,807	4,602	5,088	5,177	3,365	5,867
PNG Real Return on Equity	12.5%												
GASPROM RETURNS													
Gasprom Share of Common Stock		17%	17%	17%	17%	17%	17%	17%	17%	17%	17%	17%	17%
CS Dividends	-	-	-	-	-	11,986	32,169	28,621	35,983	41,376	43,783	29,594	53,669
Gasprom CS Dividends		-	-	-	-	1,998	5,361	4,770	5,997	6,896	7,297	4,932	8,945
Gasprom CS Dividends		-	-	-	-	1,998	5,361	4,770	5,997	6,896	7,297	4,932	8,945
Plus: Gasprom Transport Marginal Profit	-	-	18,024	19,582	39,732	40,845	41,988	43,668	45,414	47,231	49,120	51,085	53,128
Less: Gasprom Equity	-	7,349	18,130	5,791	-	-	-	-	-	-	-	-	-
Gasprom Net Cash Flow	-	(7,349)	(107)	13,790	39,732	42,842	47,350	48,438	51,412	54,127	56,417	56,017	62,073
Real Gasprom Net Cash Flow	-	(7,002)	(99)	12,434	34,848	36,552	39,297	38,654	39,449	39,936	40,025	38,212	40,715
Gasprom Real Return on Equity	135.5%												
FOREIGN INVESTOR RETURNS													
Foreign Share of Common Stock		50%	50%	50%	50%	50%	50%	50%	50%	50%	50%	50%	50%
CS Dividends	-	-	-	-	-	11,986	32,169	28,621	35,983	41,376	43,783	29,594	53,669
Foreign CS Dividends		-	-	-	-	5,993	16,084	14,311	17,991	20,688	21,892	14,797	26,834
Foreign CS Dividends		-	-	-	-	5,993	16,084	14,311	17,991	20,688	21,892	14,797	26,834
Less: Foreign Equity	-	22,046	54,391	17,374	-	-	-	-	-	-	-	-	-
Less: Additional Equity Investment	-	-	-	-	-	-	-	-	-	-	-	-	-
Foreign Net Cash Flow	-	(22,046)	(54,391)	(17,374)	-	5,993	16,084	14,311	17,991	20,688	21,892	14,797	26,834
Real Foreign Cash Flow	-	(21,005)	(50,414)	(15,665)	-	5,113	13,349	11,420	13,805	15,264	15,531	10,094	17,601
Foreign Real Return on Equity	12.5%												

REVISED CASE 1B.1: Wet Gas = $0; Expected Tax; Gasprom Profit @ 25%

SIBERIAN GAS PROCESSING PLANT
Equity Returns

(Thousands)

	2007	2008	2009	2010	2011	2012	2013	2014	2015	Total
EQUITY INVESTMENT										
SNGP Equity	-	-	-	-	-	-	-	-	-	31,270
PNG Equity	-	-	-	-	-	-	-	-	-	31,270
Gasprom Equity	-	-	-	-	-	-	-	-	-	31,270
Foreign Equity	-	-	-	-	-	-	-	-	-	93,811
Additional Equity	-	-	-	-	-	-	-	-	-	-
Total Equity	-	-	-	-	-	-	-	-	-	187,622
CUMULATIVE EQUITY INVESTMENT										
SNGP Equity Holdings	31,270	31,270	31,270	31,270	31,270	31,270	31,270	31,270	31,270	
PNG Equity Holdings	31,270	31,270	31,270	31,270	31,270	31,270	31,270	31,270	31,270	
Gasprom Equity Holdings	31,270	31,270	31,270	31,270	31,270	31,270	31,270	31,270	31,270	
Foreign Equity Holdings	93,811	93,811	93,811	93,811	93,811	93,811	93,811	93,811	93,811	
CS Equity Position	187,622	187,622	187,622	187,622	187,622	187,622	187,622	187,622	187,622	
PROJECT RETURN ON EQUITY										
CS Dividends	79,982	83,181	86,508	89,969	93,567	97,310	101,203	105,251	129,446	1,143,597
Less: Equity Investment	-	-	-	-	-	-	-	-	-	187,622
Net Cash Flow	79,982	83,181	86,508	89,969	93,567	97,310	101,203	105,251	129,446	955,975
Cumulative	169,540	252,721	339,230	429,198	522,766	620,076	721,279	826,529	955,975	
Real Net Cash Flow	50,443	50,443	50,443	50,443	50,443	50,443	50,443	50,443	59,653	493,386
Real Return on Equity										

SIBERIAN GAS PROCESSING PLANT
Equity Returns
(Thousands)

	2007	2008	2009	2010	2011	2012	2013	2014	2015	Total
SNGP RETURNS										
SNGP Share of Common Stock	17%	17%	17%	17%	17%	17%	17%	17%	17%	
CS Dividends	79,982	83,181	86,508	89,969	93,567	97,310	101,203	105,251	129,446	1,143,597
SNGP CS Dividends	13,330	13,864	14,418	14,995	15,595	16,218	16,867	17,542	21,574	190,599
SNGP CS Dividends	13,330	13,864	14,418	14,995	15,595	16,218	16,867	17,542	21,574	190,599
Plus: SNGP NGL Pipeline Marginal Profit	-	-	-	-	-	-	-	-	-	-
Less: SNGP Equity	-	-	-	-	-	-	-	-	-	31,270
SNGP Net Cash Flow	13,330	13,864	14,418	14,995	15,595	16,218	16,867	17,542	21,574	159,329
Real SNGP Net Cash Flow	8,407	8,407	8,407	8,407	8,407	8,407	8,407	8,407	9,942	82,231
SNGP Real Return on Equity										
PNG RETURNS										
PNG Share of Common Stock	17%	17%	17%	17%	17%	17%	17%	17%	17%	
CS Dividends	79,982	83,181	86,508	89,969	93,567	97,310	101,203	105,251	129,446	1,143,597
PNG CS Dividends	13,330	13,864	14,418	14,995	15,595	16,218	16,867	17,542	21,574	190,599
PNG CS Dividends	13,330	13,864	14,418	14,995	15,595	16,218	16,867	17,542	21,574	190,599
Plus: PNG Wet Gas Marginal Profit	-	-	-	-	-	-	-	-	-	-
Less: PNG Equity	-	-	-	-	-	-	-	-	-	31,270
PNG Net Cash Flow	13,330	13,864	14,418	14,995	15,595	16,218	16,867	17,542	21,574	159,329
Real PNG Net Cash Flow	8,407	8,407	8,407	8,407	8,407	8,407	8,407	8,407	9,942	82,231
PNG Real Return on Equity										
GASPROM RETURNS										
Gasprom Share of Common Stock	17%	17%	17%	17%	17%	17%	17%	17%	17%	
CS Dividends	79,982	83,181	86,508	89,969	93,567	97,310	101,203	105,251	129,446	1,143,597
Gasprom CS Dividends	13,330	13,864	14,418	14,995	15,595	16,218	16,867	17,542	21,574	190,599
Gasprom CS Dividends	13,330	13,864	14,418	14,995	15,595	16,218	16,867	17,542	21,574	190,599
Plus: Gasprom Transport Marginal Profit	55,254	57,464	59,762	62,153	64,639	67,224	69,913	72,710	75,618	1,034,555
Less: Gasprom Equity	-	-	-	-	-	-	-	-	-	31,270
Gasprom Net Cash Flow	68,584	71,327	74,180	77,148	80,233	83,443	86,781	90,252	97,193	1,193,884
Real Gasprom Net Cash Flow	43,255	43,255	43,255	43,255	43,255	43,255	43,255	43,255	44,790	743,850
Gasprom Real Return on Equity										
FOREIGN INVESTOR RETURNS										
Foreign Share of Common Stock	50%	50%	50%	50%	50%	50%	50%	50%	50%	
CS Dividends	79,982	83,181	86,508	89,969	93,567	97,310	101,203	105,251	129,446	1,143,597
Foreign CS Dividends	39,991	41,591	43,254	44,984	46,784	48,655	50,601	52,625	64,723	571,798
Foreign CS Dividends	39,991	41,591	43,254	44,984	46,784	48,655	50,601	52,625	64,723	571,798
Less: Foreign Equity	-	-	-	-	-	-	-	-	-	93,811
Less: Additional Equity Investment	-	-	-	-	-	-	-	-	-	-
Foreign Net Cash Flow	39,991	41,591	43,254	44,984	46,784	48,655	50,601	52,625	64,723	477,988
Real Foreign Cash Flow	25,222	25,222	25,222	25,222	25,222	25,222	25,222	25,222	29,827	246,693
Foreign Real Return on Equity										