The Afghanistan Engineering Support Program assembled this deliverable. It is an approved, official USAID document. Budget information contained herein is for illustrative purposes. All policy, personal, financial, and procurement sensitive information has been removed. Additional information on the report can be obtained from Firouz Rooyani, Tetra Tech Sr. VP International Operations, (703) 387-2151.

November 25, 2014

[redacted]
Phoenix IT Solutions Ltd.
Da Afghanistan Breshna Sherkat (DABS)
Kabul, Afghanistan

Re: **USAID Contract No. EDH-I-00-08-00027-00 / Task Order No. 1**
Afghanistan Engineering Support Program (AESP)

Work Order WO-LT-0070, Amendment 4
Tarakhil Thermal Power Plant

Dear Mr. [redacted]

Please find enclosed the recent information received by Tetra Tech, detailing the materials to be purchased by Phoenix to facilitate the installation of the SCADA system, computer servers and Uninterruptable Power Supply (UPS). The attachments include the following:

- Three (3) drawings indicating placement and relationship of the new equipment relative to the existing Power Control Rooms.
- A Bill of Materials (BoM) which provides detailed information about the hardware and software specified for this project.
- SCADA Server Configuration Sheet.
- Generator PC Configuration Sheet

Please contact us should you have any questions or comments regarding this inventory.

Respectfully,
Tetra Tech, Inc.

[redacted]
Chief of Party (AESP)

Cc: [redacted] (USAID-OEGI)
[redacted] USAID-OEGI)

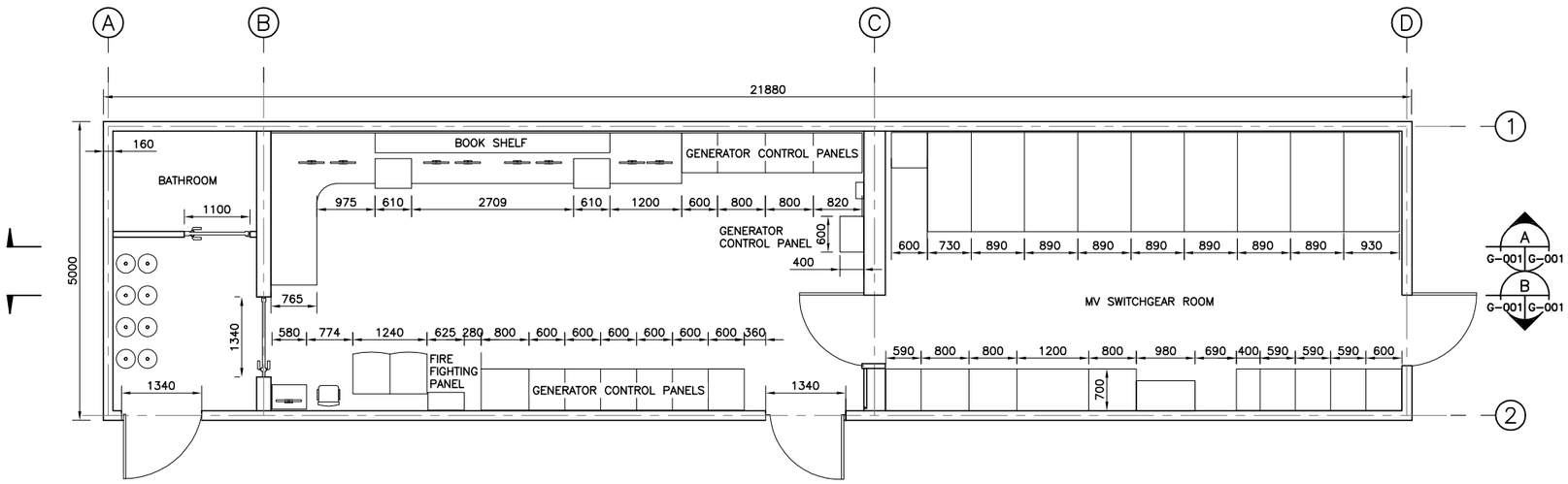

POWER CONTROL ROOM–B
EXISTING PLAN
SCALE 1:50

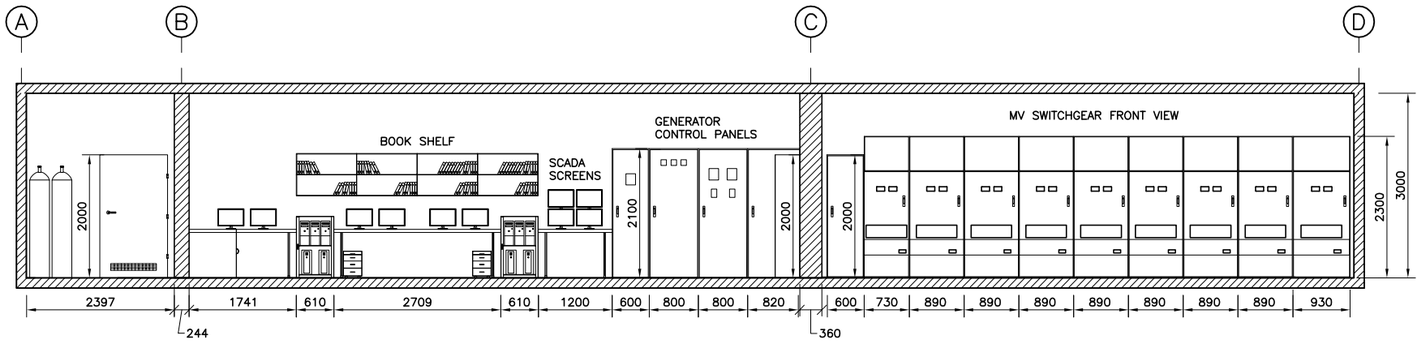

POWER CONTROL ROOM–B
EXISTING ELEVATION
SCALE 1:50
A G-001 G-001

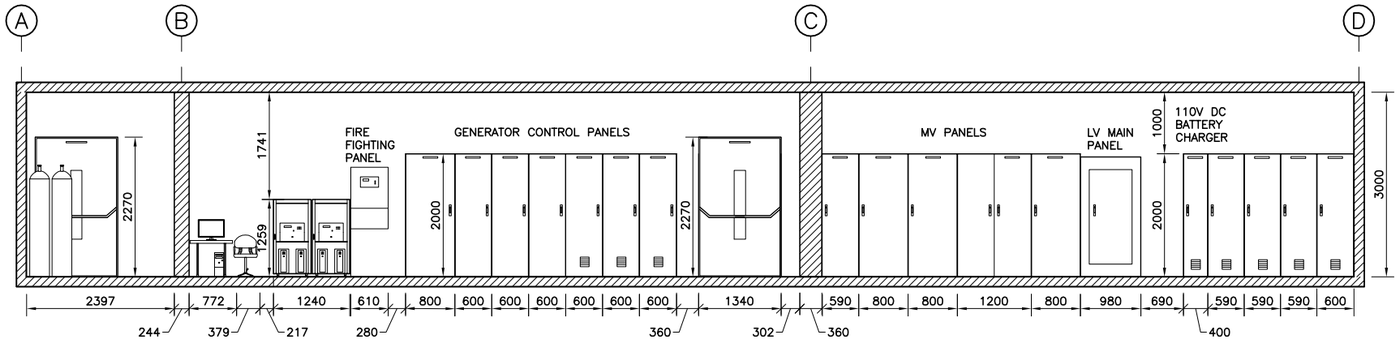

POWER CONTROL ROOM–B EXISTING
PLAN & ELEVATION
SCALE 1:50
B G-001 G-001

1 0 1 2 3 4
1:50

UNLESS OTHERWISE NOTED, LINEAR DIMENSIONS SHOWN ARE IN MILLIMETERS.

NOTE: A3 SIZE REDUCED TO HALF SCALE

THIS PROJECT WAS MADE POSSIBLE BY THE UNITED STATES AGENCY FOR INTERNATIONAL DEVELOPMENT AND THE GENEROUS SUPPORT OF THE AMERICAN PEOPLE THROUGH USAID GLOBAL ARCHITECTURE AND ENGINEERING IQC CONTRACTS

ISSUED FOR INFORMATION

SYMB	SUBMITTAL/REVISION DESCRIPTION	DATE	APR
A	ISSUED FOR INFORMATION	05/11/14	

DESIGNED BY: WM
DATE: 05/11/14
DRAWN BY: WM
SUBMITTED BY: Tetra Tech
CHECKED BY: MAY
CAD FILE NAME: G-001

USAID FROM THE AMERICAN PEOPLE

A E S P

USAID – OEGI
WOLT0070–AMD6
TARAKHIL POWER PLANT

POWER CONTROL ROOM–B FLOOR
EXISTING PLAN AND ELEVATION

SHEET REFERENCE NUMBER:
G-001

P:\1298\Work Orders\WO-LT\WO-LT-0070 Tarakhil Power Plant Water Piping System\CAD\SheetFiles\PCR-B-Elevation Plans\G-001.dwg Popalzai,

NOTE:

1. THE TAGGED NUMBERS CORRESPOND TO NUMBERS OF ITEMS IN THE BOQ.
   - 1 CLIENT SCADA STATIONS
   - 2 CLIENT SCADA MONITORS
   - 13 SERVER MONITOR + BACKUP
   - 14 SERVER COMPUTER + BACKUP
2. THE MONITORS CAN BE MOUNTED EITHER ON WALL OR ON ARMS AS TILT OR ANY OTHER POSITIONS TO MAXIMIZE VIEW PER OPERATORS' DESIRE.
3. THE EXISTING BOOK SHELVES TO BE RELOCATED

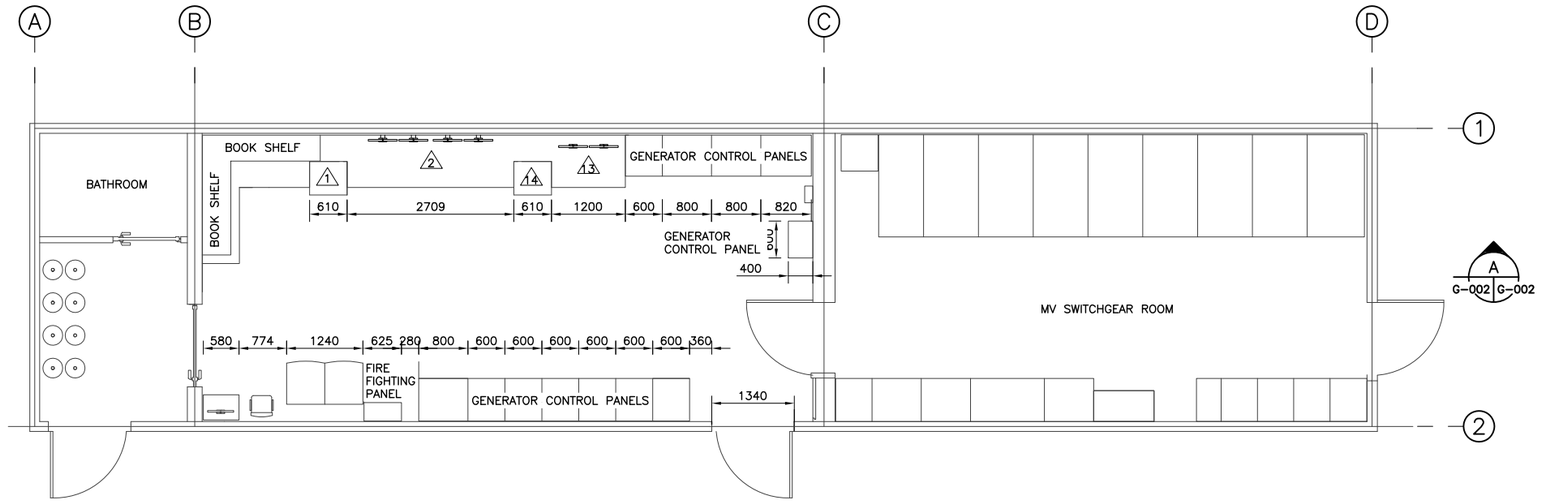

PROPOSED PLAN FOR MONITOR MOUNTING
IN CONTROLROOM–A, B & C
SCALE 1:50

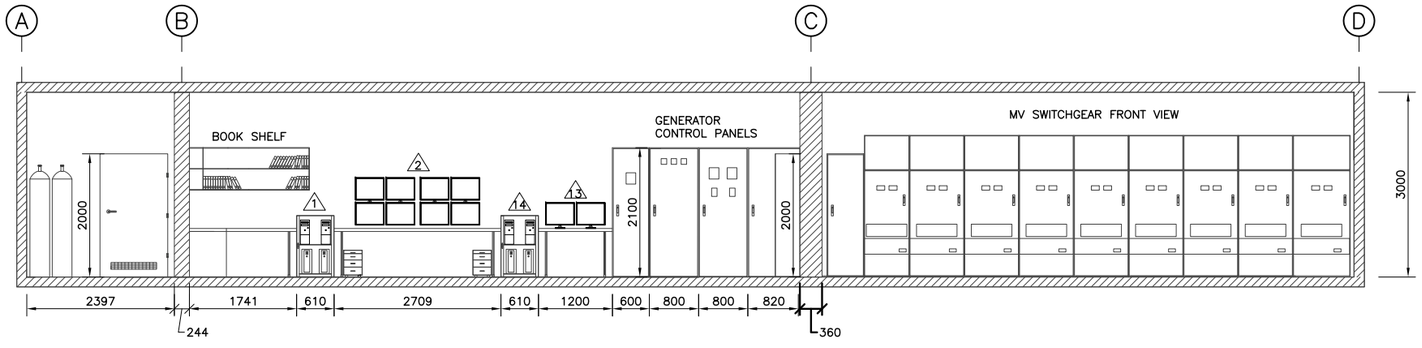

PROPOSED ELEVATION FOR MONITOR MOUNTING
IN POWER CONTROL ROOM–A, B & C
SCALE 1:50

A
G-002 G-002

1 0 1 2 3 4
1:50

UNLESS OTHERWISE NOTED, LINEAR DIMENSIONS SHOWN ARE IN MILLIMETERS.

NOTE: A3 SIZE REDUCED TO HALF SCALE

N

ISSUED FOR INFORMATION

SYMB	SUBMITTAL/REVISION DESCRIPTION	DATE	APR
A	ISSUED FOR INFORMATION	05/11/14	

THIS PROJECT WAS MADE POSSIBLE BY THE UNITED STATES AGENCY FOR INTERNATIONAL DEVELOPMENT AND THE GENEROUS SUPPORT OF THE AMERICAN PEOPLE THROUGH USAID GLOBAL ARCHITECTURE AND ENGINEERING IQC CONTRACTS

DESIGNED BY: WM
DATE: 05/11/14
DRAWN BY: WM
SUBMITTED BY: Tetra Tech
CHECKED BY: MAY
CAD FILE NAME: G-002

USAID FROM THE AMERICAN PEOPLE

A E S P

USAID – OEGI
WOLT0070–AMD6
TARAKHIL POWER PLANT

PROPOSED MONITOR MOUNTING IN POWER CONTROL ROOM–A, B & C

SHEET REFERENCE NUMBER:
G–002

\\TTS317FS1\Project\1298\Work Orders\WO-LT\WO-LT-0070 Tarakhil Power Plant Water Piping System\CAD\SheetFiles\PCR-B-Elevation Plans\G-002.dwg Papalzai,

NOTE:
1. THE TAGGED NUMBERS CORRESPOND TO NUMBERS OF ITEMS IN THE BOQ.
   - 8 UPS SYSTEM
   - 9 UPS BATTERY CABINET
   - 10 UPS BBM BYPASS SWITCH
   - 11 GENERATOR TOUCH SCREEN MONITOR
   - 12 GENERATOR PC
2. UPS SHOULD BE CONNECTED TO EXISTING POWER SOURCE IN POWER CONTROL ROOM LV, 1ϕ, SERVICE.
3. NEW WIRING SHOULD BE DONE IN EXISTING CABLE TRAY.
4. ALL NEW WIRING SHALL BE COPPER, SINGLE, STRANDED, AND CABLE TRAY RATED.
5. THE MANUAL DISCONNECT SWITCH SHOULD BE INSTALLED NEAR UPS.

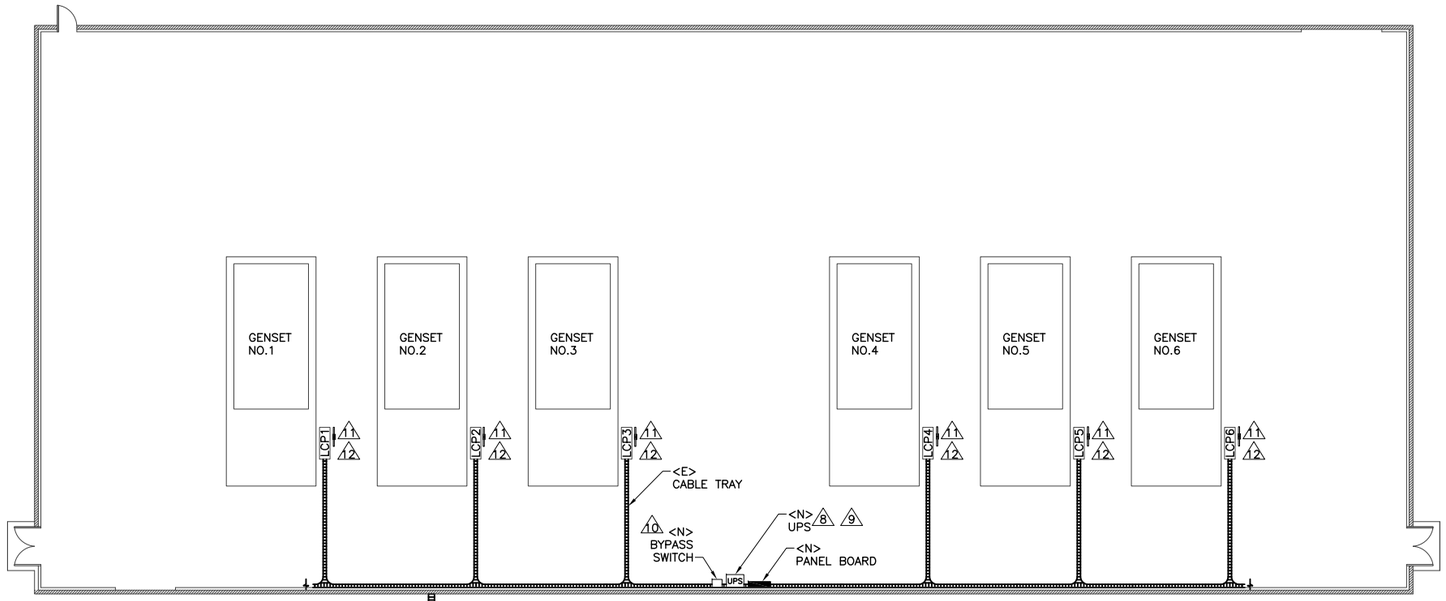

POWER HOUSE
SCALE 1:150

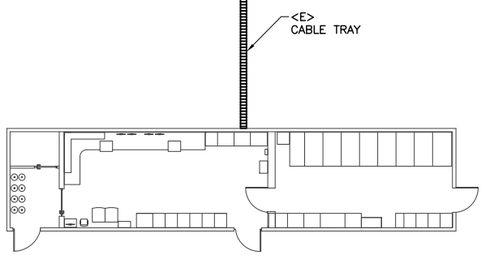

POWER CONTROL ROOM
SCALE 1:150

FEEDER MAINS							
FEEDER ID	AMPS	SETS PARALLEL CONDUCTORS AND RACEWAYS	PHASE CONDUCTOR	NEUTRAL	GROUND	RACEWAY SIZE	NOTES
A	63	–	1(1x25mm²)CU	1x25mm²	1x16mm²	EXISTING CABLE TRAY	CABLE TRAY RATED
B	10	–	1(1x2.5mm²)CU	1x2.5mm²	1x2.5mm²	EXISTING CABLE TRAY	CABLE TRAY RATED

FEEDER & MAINS SCHEDULE
SCALE N.T.S

LEGEND

SYMBOL	DESCRIPTION
	CIRCUIT BREAKER
	BYPASS SWITCH
UPS	UNINTERRUPTIBLE POWER SUPPLY
	PANEL BOARD
	MANUAL DISCONNECT SWITCH

ABBREVIATIONS

<E> – EXISTING
<N> – NEW
UPS – UNINTERRUPTIBLE POWER SUPPLIES
CU – COPPER
LCP – LOCAL CONTROL PANEL
GENSET – GENERATOR SET
NO. – NUMBER
PCR– POWER CONTROL ROOM
LV– LOW VOLTAGE
N.T.S– NOT TO SCALE

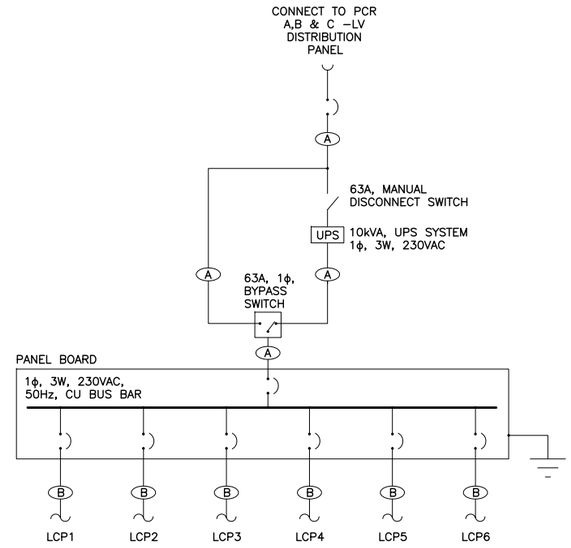

PROPOSED UPS SINGLE LINE DIAGRAM
SCALE N.T.S

POWER HOUSE–A, B & C UPS SYSTEM
PROPOSED PLAN
SCALE 1:150

5 0 5 10
1:150

UNLESS OTHERWISE NOTED, LINEAR DIMENSIONS SHOWN ARE IN MILLIMETERS.

NOTE: A3 SIZE REDUCED TO HALF SCALE

N

THIS PROJECT WAS MADE POSSIBLE BY THE UNITED STATES AGENCY FOR INTERNATIONAL DEVELOPMENT AND THE GENEROUS SUPPORT OF THE AMERICAN PEOPLE THROUGH USAID GLOBAL ARCHITECTURE AND ENGINEERING IQC CONTRACTS

ISSUED FOR INFORMATION

SYMB	SUBMITTAL/REVISION DESCRIPTION	DATE	APR
A	ISSUED FOR INFORMATION	05/11/14	

DESIGNED BY: WM
DATE: 05/11/14
DRAWN BY: WM
SUBMITTED BY: Tetra Tech
CHECKED BY: MAY
CAD FILE NAME: G–003

USAID FROM THE AMERICAN PEOPLE

A E S P

USAID – OEGI
WOLT0070–AMD6
TARAKHIL POWER PLANT
POWER HOUSE –A, B & C UPS SYSTEM PROPOSED PLAN

SHEET REFERENCE NUMBER:
G–003

\\TTS317FS1\Project\1298\Work Orders\WO-LT\WO-LT-0070 Tarakhil Power Plant Water Piping System\CAD\SheetFiles\PCR-B-Elevation Plans\G-003.dwg Papalzai,

SCADA Equipment BOQ 11/25/2014

I.D.	ITEM	MFR	DESCRIPTION	PART NUMBER	QTY	SPARE QUANTITY	SHIP TO BOISE QUANTITY	TOTAL QTY	PRICE	EXT. PRICE	NOTE:
1	CLIENT SCADA STATION	LENOVO	THINKCENTRE M73 10B00005US DESKTOP PC INTEL CORE I5 4570 (3.20GHZ) 4GB DDR3 500GB HDD WINDOWS 7 PROFESSIONAL 64-BIT	10B00005US	6	1	1	8	[redacted]		
2	CLIENT MONITOR	LENOVO	LENOVO LT2323P RAVEN BLACK 23" 5MS HEIGHT&PIVOT ADJUSTABLE WIDESCREEN LED MONITOR 250 CD/M2 1000:1 W/USB HUB	LT2323P	24	2	4	30	[redacted]		
	CLIENT MONITOR CABLE	TRIPPLITE	MINI DISPLAYPORT TO DISPLAYPORT CABLE (M/M) 10FT	P583-010	24	3	4	31	[redacted]		
	CLIENT VIDEO CARD	PNY	NVIDIA NVS510 QUAD PORT LOW PROFILE GRAPHICS CARD	VCNVS510DP-PB NVS	6	1	1	8	[redacted]		
	CLIENT MOUSE PADS	FELLOWES	FELLOWES 58024 MEDIUM MOUSEPAD BLACK	58024	6	6	0	12	[redacted]		
	MONITOR WALL MOUNT	DYCONN	DYCONN WA540S (BUTTERFLY SERIES) - ARTICULATING TV/MONITOR WALL MOUNT - FULL +/-90° SWIVEL AND TILT - SUPPORTS UP TO 13-34" DISPLAYS & 17.6	WA540S	16	3	0	19	[redacted]		
	MONITOR DESK MOUNT	ERGOTRON	QUAD MONITOR DESK STAND	33-324-200	0	0	1	1	[redacted]		
8	UPS SYSTEM	POWERWARE	10KVA/8KW FERRORESONANT UPS	QFE10KVA	3	0	0	3	[redacted]		
9	UPS BATTERY CABINET	POWERWARE	11 MINUTE EXTERNAL UPS BATTERY CABINET	ASY-0386	3	0	0	3	[redacted]		
10	UPS BBM BYPASS SWITCH	POWERWARE	BREAK BEFORE MAKE UPS MAINTENANCE BYPASS SWITCH	BPE-05	3	0	0	3	[redacted]		
11	GENERATOR TOUCH SCREEN MONITOR	HOPE INDUSTRIAL	ANALOG RESISTIVE TOUCH SCREEN 12.1" WITH SERIAL AND USB CONNECTIONS	HIS-ML12-STAY	18	2	1	21	[redacted]		
12	GENERATOR PC	LANNER	LANNER LEC-2280E 3RD GEN (IVY BRIDGE) INTEL CORE I5 / I7 FANLESS EMBEDDED PC SYSTEM	LEC-2280E-5A	18	2	1	21	[redacted]		Requires configuration. See "Generator PC Configuration Sheet" for details.
13	SERVER MONITOR	LENOVO	LENOVO LT2323P RAVEN BLACK 23" 5MS HEIGHT&PIVOT ADJUSTABLE WIDESCREEN LED MONITOR 250 CD/M2 1000:1 W/USB HUB	LT2323P	2	0	0	2	[redacted]		
14	SERVER COMPUTER	LENOVO	TD340 DESKTOP SERVER, 32GB, 2X E5-2420V2, 8X 600GB 10K SAS, RAID 700 ADAPTER W/ BATTERY, RAID 5, QUAD GIGABIT ETHERNET, 800W X2 POWER SUPPLIES.	TD340	2	1	0	3	[redacted]		Requires configuration. See "SCADA Server Configuration Sheet" for details. Order from http://www.lenovo.com, at http://shop.lenovo.com/us/en/servers/thinkserver/towers/td340/
	SERVER MOUSE PADS	FELLOWES	FELLOWES 58024 MEDIUM MOUSEPAD BLACK	58024	2	0	0	2	[redacted]		
	VMWARE VCENTER ESSENTIALS KIT	VMWARE	VMWARE VCENTER 3 SERVER, VCENTER SERVER	VSPHERE ESSENTIALS	0	0	1	1	[redacted]		
	SIEMENS S7 PRO	SIEMENS	S7 PRO SOFTWARE (PLC PROGRAMMING)	6ES78105CC110YA5	0	1	0	1	[redacted]		
	SIEMENS	SIEMENS	S7 PLC PROGRAMMING CABLE/ADAPTER	6GK15710BA000AA0	0	3	0	3	[redacted]		
	LENOVO T540 W/SSD	LENOVO	SPARE LAPTOP FOR PROGRAMMING PLC	T540	0	3	0	3	[redacted]		
	VMWARE PLAYER PLUS	VMWARE	VMWARE PLAYER PLUS SOFTWARE KEY	VMWARE PLAYER PLUS 6	6	0	0	6	[redacted]		
	MICROSOFT LICENSING	MICROSOFT	MICROSOFT VOLUME LICENSING SEE ATTACHED SHEET	0C5-D79-976	0	0	1	1	[redacted]		Part number can be used to retrieve the volume license quote from Microsoft Volume Licensing at http://mla.microsoft.com/trainer.aspx
	WONDERWARE LICENSING	WONDERWARE	WONDERWARE INTOUCH LICENSES SEE ATTACHED SHEET	Q-20141024-12521 rev1	0	0	1	1	[redacted]		
	TOTAL							0	[redacted]		

NOTE- Readily available generic components such as breakers, panel boxes, clamps, conductor, etc. are not listed and should be procured locally.

Print

Description

ThinkServer TD340

Processor:	Intel Xeon E5-2420 v2 Processor (15MB Cache, 2.20GHz)
Operating System:	None
Operating System Language:	No Operating System
Form Factor:	5U chassis kit with redudant PS
Memory RAS Features:	Memory Independent for EN
1st_Mem:	8GB DDR3L-1600MHz (2Rx8) RDIMM
2nd_Mem:	8GB DDR3L-1600MHz (2Rx8) RDIMM
3rd_Mem:	8GB DDR3L-1600MHz (2Rx8) RDIMM
4th_Mem:	8GB DDR3-1600MHz (2Rx8) RDIMM
5th_Mem:	8GB DDR3L-1600MHz (2Rx8) RDIMM
6th_Mem:	8GB DDR3L-1600MHz (2Rx8) RDIMM
Hard Drive Configuration Choices -- Direct Cable or Hot Swap:	Hot Swap
Hard Drive Configuration Choices -- Capacity:	2x4port 3.5" HDD Cage
RAID Adapters and Upgrades:	ThinkServer RAID 500 Adapter w/Upgrade Key (RAID 0,1,5,10,50)
RAID Configuration Option:	Internal RAID configured by customer
1st_HDD:	1TB 3.5" 7200 RPM Enterprise SATA 6Gbps Hot Swap Hard Drive
2nd_HDD:	1TB 3.5" 7200 RPM Enterprise SATA 6Gbps Hot Swap Hard Drive
3rd_HDD:	1TB 3.5" 7200 RPM Enterprise SATA 6Gbps Hot Swap Hard Drive
4th_HDD:	1TB 3.5" 7200 RPM Enterprise SATA 6Gbps Hot Swap Hard Drive
5th_HDD:	1TB 3.5" 7200 RPM Enterprise SATA 6Gbps Hot Swap Hard Drive
6th_HDD:	1TB 3.5" 7200 RPM Enterprise SATA 6Gbps Hot Swap Hard Drive
First Optical Device:	DVD ROM
First Ethernet Adapter:	ThinkServer 1Gbps Ethernet I350-T4 Server Adapter by Intel
System Diagnostics:	DIT Kit for Redundant Power Supply

First Power Supply:	800W Redundant PSU
Second Power Supply:	800W Redundant PSU
Language Pack:	Windows Server Ship Group - ML
Warranty:	3 Year On-site

Accessories and options:

3 Year Keep Your Drive (TD Series)

GENERATOR PC CONFIGURATION SHEET

Order from:

www.e-itx.com
http://www.e-itx.com/lec-2280e.html

Specify the following in drop-down windows:

Chassis : 277mm (W) x 194mm (D) x 67mm (H) Fanless Design

Processor : Intel Core i5-3610ME (Ivy Bridge) Dual Core Processor, 3MB Cache, up to 3.30GHz, 35W

*Memory : 8GB DDR3 SODIMM Memory (MEM2003) (+$110.00)

*Storage : SSD - 120GB Solid State Drive (SSD1001) (+$90.00)

Expansion : PCI Express X1 Expansion Slot

Graphics : Intel HD Graphics 4000

Displays : HDMI, DVI-D and VGA Connectors

Audio : Realtek ALC886 HD Audio Codec

LAN : (2) Intel 82574L Gigabit Ethernet Controllers

*WLAN : WiFi and Bluetooth Networks (Optional)

*WAN : 3G GSM and GPS Module (Optional)

DC : 9V to 30V Wide Range DC Power Input with Phoenix Connector

*AC : AC-DC Power Adapter with American Power Cord (Standard)

Mounting : Wall / Table Mountable

*O/S : 64-bit Windows 7 Professional w/OEM License & Media (SOF2003) (+$180.00)

*Assembly : Complete System Hardware & O/S Installation (SYS-ASM)

*Warranty : E-ITX 1-Year Limited System Hardware Warranty (W-SYS-01)

*Policy : Special Order Item - Non Cancelable, Non Refundable (RTN-NCNR)