The Afghanistan Engineering Support Program assembled this deliverable. It is an approved, official USAID document. Budget information contained herein is for illustrative purposes. All policy, personal, financial, and procurement sensitive information has been removed. Additional information on the report can be obtained from Firouz Rooyani, Tetra Tech Sr. VP International Operations, (703) 387-2151.

Site Visit Report	Project: **Pul-e-Khumri Sports Stadium Improvement**
Location: **Pul-e-Khumri, Baghlan Province**	Coordinates: Latitude: **N 35° 56' 6"** Longitude: **E 68° 42' 51"**
Inspection Date: **07/11/2013**	Weather: **Cloudy, Temp @ 18°C, No Precipitation**
Inspectors: [redacted]	Status: **Incomplete**

PRESENTED TO

United States Agency for International Development (USAID)
Office of Economic Growth and Infrastructure (OEGI)

RampUP North

Great Massoud Road
Kabul, Afghanistan

PRESENTED BY

Tetra Tech, Inc.
Afghanistan Engineering Support Program
Contract No. EDH-I-00-08-00027-00
Task Order No. 1

Work Order WO-LT-0009 AMD #5

Shash Darak
Kabul, Afghanistan

[redacted]

Date: **01/21/14**

Title: **Deputy Chief of Party**

EXECUTIVE SUMMARY

The Pul-e-Khumri Sports Stadium Improvement project is located in Baghlan province. It includes one (1) football playground, one (1) volleyball playground, and one (1) basketball playground. This project is funded by USAID/RC-North and partially funded by Pul-E-e-Khumri Municipality. According to Municipality's Master Plan, this area was originally allocated for a youth playground, but was used as informal trash disposal site and toilet area. In September 2012, a meeting between the Pul-e-Khumri Mayor, the SDAG and the PAAG took place. The participants prioritized the construction of a stadium for the youth within the municipality.

On November 7, 2013, two engineers from Tetra Tech's (Tt) Afghanistan Engineering Support Program reviewed the project documentation for the Pul-e-Khumri Sports Stadium Improvement and traveled to Baghlan province to evaluate the visible completed works. The provided project documentation included drawings (Appendix A) and a project proposal (Appendix B). Tt determined that USAID's contribution to the construction of the Pul-e-Khumri Sports Stadium Improvement project is in progress, but incomplete. The contractor's remaining work consists of painting the boundary wall fence, installation of handrails and construction of the PCC for the stairway, pointing of the stairs, construction of the volleyball court area, construction of the basketball court area, and construction of the football pitch. Tt also determined that the Pul-e-Khumri Municipality's portion of the construction is in progress, but it is incomplete. The ongoing work consists of leveling the site and completing the site landscaping. Overall, the construction was found to be satisfactory and in compliance with the plans and project proposal provided by RAMP UP North.

DISCLAIMER

The author's views expressed in this publication do not necessarily reflect the views of the United States Agency for International Development or the United States Government.

TABLE OF CONTENTS

EXECUTIVE SUMMARY i
1.0 INTRODUCTION 2
2.0 SITE VISIT 2
3.0 SITE VISIT DETAILS: USAID RESPONSIBILITY 2
4.0 SITE VISIT DETAILS: PUL-E-KHUMRI MUNICIPALITY RESPONSIBILITY 3

LIST OF FIGURES

Figure 1. **Sign Board of Sport Stadium Improvement** 4
Figure 2. **Spectators Area with Fence** 4
Figure 3. **Brick Masonry Drainage** 5
Figure 4. **Stair for Spectators** 5
Figure 5. **Welding process of GI Pipe for Football Goals** 6
Figure 6. **New Constructed Boundary Wall with Gate for Sport Stadium** 6
Figure 7. **Basketball Court Area** 7
Figure 8. **Grading of Volleyball Court Area** 7
Figure 9. **Sub Gate for Sports Stadium** 8
Figure 10. **Football Pitch Area** 8

APPENDICES

APPENDIX A – PUL-E-KHUMRI SPORTS STADIUM IMPROVEMENT DRAWINGS 1
APPENDIX B – PUL-E-KHUMRI SPORTS STADIUM IMPROVEMENT PROJECT PROPOSAL 2

This report was prepared for the United States Agency for International Development, Contract No. EDH-I-00-08-00027-00, Task Order 01, Afghanistan Engineering Support Program.

1.0 INTRODUCTION

The Pul-e-Khumri Sports Stadium Improvement project is located in Baghlan province. It includes one (1) football playground, one (1) volleyball playground, and one (1) basketball playground. This project is funded by USAID/RC-North and partially funded by Pul -e-Khumri Municipality.

According to Municipality's Master Plan this area was originally allocated for a youth playground but was used as informal trash and human waste disposal site, which has the potential to negatively affect the health of citizens. On September 27, 2012, a joint meeting of the Pul-e-Khumri Mayor, the Service Delivery Advisory Group (SDAG) and the Public Administration Advisory Group (PAAG) took place with a total of 23 participants. The participants prioritized the construction of a stadium for the youth within the municipality. A preliminary joint feasibility study was completed in coordination with the Municipal Engineer and SDAG members, which confirmed that the land for the stadium belongs to the municipality. The municipality also anticipates establishing a public-private partnership to operate and maintain the stadium after project closeout.

The construction of the stadium was intended to fulfill the following objectives:

- To improve the quality of health and environment for youths.
- Decrease environmental pollution and contamination.
- Increase municipal income and revenue generation.
- Provide youth with an area for sports and entertainment.
- Improve the municipality technical capacity in project implementation and providing sustainable service delivery.
- Capacity development of municipal staff in project management, project procurement, monitoring and evaluation and public private partnership.

The direct beneficiaries will be all Pul-e-Khumri residents, an estimated population of 98,900 people (48,200 women and 50,700 men), while the indirect beneficiaries will include other people who come from districts and other provinces of the country.

Construction of all boundary walls, entrance gate, pergolas, spectators areas, brick masonry drainages, football pitch, volleyball court and basketball court are funded by USAID. Contributions from Pul-e-Khumri Municipality include site preparation (cutting, filling, leveling and compacting) and supply and installation of landscaping in required areas as part of the Pul-e-Khumri Sports Stadium Improvement.

2.0 SITE VISIT

Two engineers from Tetra Tech's (Tt) Afghanistan Engineering Support Program reviewed the project documentation for the Sport Stadium Improvement and traveled to Baghlan province on November 07, 2013 to evaluate the visible completed works. The provided project documentation included drawings (Appendix A), and a project proposal (Appendix B). Tt engineers were accompanied by DAI site engineer (Mohammad Atta) and construction manager during the site evaluation. The findings of this site observation are documented in this report, including photos provided in the Figures section on pages 4 to 8.

3.0 SITE VISIT DETAILS: USAID RESPONSIBILITY

Regarding the USAID funded portion of works, the following was observed:

1. Construction of brick masonry drainage, total length of 424 meters, is completed. (See Figure 3) Plastering and top concrete cap of the drainages were as per plan. No cracks on surfaces of the drainage walls detected.
2. Construction of the boundary wall, total length of 278.8 meters, is incomplete. (See Figures 2 and 6) The wall is made of stone and brick as per the project proposal. The plaster on the brick masonry is in good shape and there were no cracks on it. The painting of the boundary wall has not been started.

   a. **Remaining work:** The contractor is required to paint the boundary wall with three coats of plastic paint.
3. Construction of the spectators' area, total of 271.6 linear meters, is incomplete. (See Figures 2, 3 and 4) The foundation construction is in accordance with the plans, however, the handrails, the Plain cement concrete (PCC) on top of the stairway, and the painting of the stairway has yet to be completed according to the drawings.
   a. **Remaining Work:** The contractor is to complete installation of the stairway handrails, construct the PCC at the top of the stairway, and paint the stairway.
4. Construction of the volleyball court area is incomplete. (See Figure 8) The leveling and paving of the court were underway, but construction of the court had not yet begun.
   a. **Remaining work:** The contractor is required to construct the PCC and install volleyball poles and netting for volleyball court area.
5. Construction of the basketball court is incomplete. (See Figure 7) No construction of the basketball court has begun.
   a. **Remaining work:** The contractor is to construct the PCC and install basketball poles, goals and netting for the court.
6. Construction of the football pitch is incomplete. (See Figure 5) This includes leveling the site, construction of the PCC base, installation of turf, and building and installation of goals with nets.
   a. **Remaining work:** The contractor is to construct and install amenities for the football pitch.

Based on above summary, Tt has determined that USAID's contribution to the construction of the Pul-e-Khumri Sports Stadium Improvement is in progress, but incomplete. The contractor's remaining work consists of painting of the boundary wall fence, oil painting of gates, fences, installation of handrails for the stairway, construction of the PCC on the top of the stairway, pointing of the stairs, construction of the PCC and installation poles with netting for the volleyball court area, construction of the PCC and installation of poles with goals and netting for the basketball court area, and construction of the PCC and installation of turf and goals with netting for the football pitch.

4.0 SITE VISIT DETAILS: PUL-E-KHUMRI MUNICIPALITY RESPONSIBILITY

Regarding the Pul-e-Khumri Municipality funded portion of works, the following was observed:

1. The site preparation before construction work is incomplete. (See Figure 8) The cutting, filling, and compacting is complete as per the site requirements. The leveling work is in progress.
   a. **Remaining Work:** The Pul-e-Khumri Municipality is to complete the leveling work.
2. The site landscaping is incomplete. Supply and installation of green grass in required areas of the sport stadium still remains. Side slops of the drainage were not constructed and are part of the stadium landscaping. Until the landscaping is completed, storm water may not be directed to the drainage.
   a. **Remaining Work:** The Pul-e-Khumri Municipality is to complete the site landscaping.

Based on the above summary, Tt has determined that the Pul-e-Khumri Municipality's portion of the construction work for the Pul-e-Khumri Sports Stadium Improvement is in progress, but it is incomplete. The ongoing work consists of leveling the site and completing the site landscaping.

FIGURES

Figure 1. Sign Board of Sport Stadium Improvement

Figure 2. Spectators Area with Fence

FIGURES (CONTINUED)

Figure 3. Brick Masonry Drainage

Figure 4. Stair for Spectators

FIGURES (CONTINUED)

Figure 5. Welding process of GI Pipe for Football Goals

Figure 6. New Constructed Boundary Wall with Gate for Sport Stadium

FIGURES (CONTINUED)

Figure 7. Basketball Court Area

Figure 8. Grading of Volleyball Court Area

FIGURES (CONTINUED)

Figure 9. Sub Gate for Sports Stadium

Figure 10. Football Pitch Area

APPENDIX A – PUL-E-KHUMRI SPORTS STADIUM IMPROVEMENT DRAWINGS

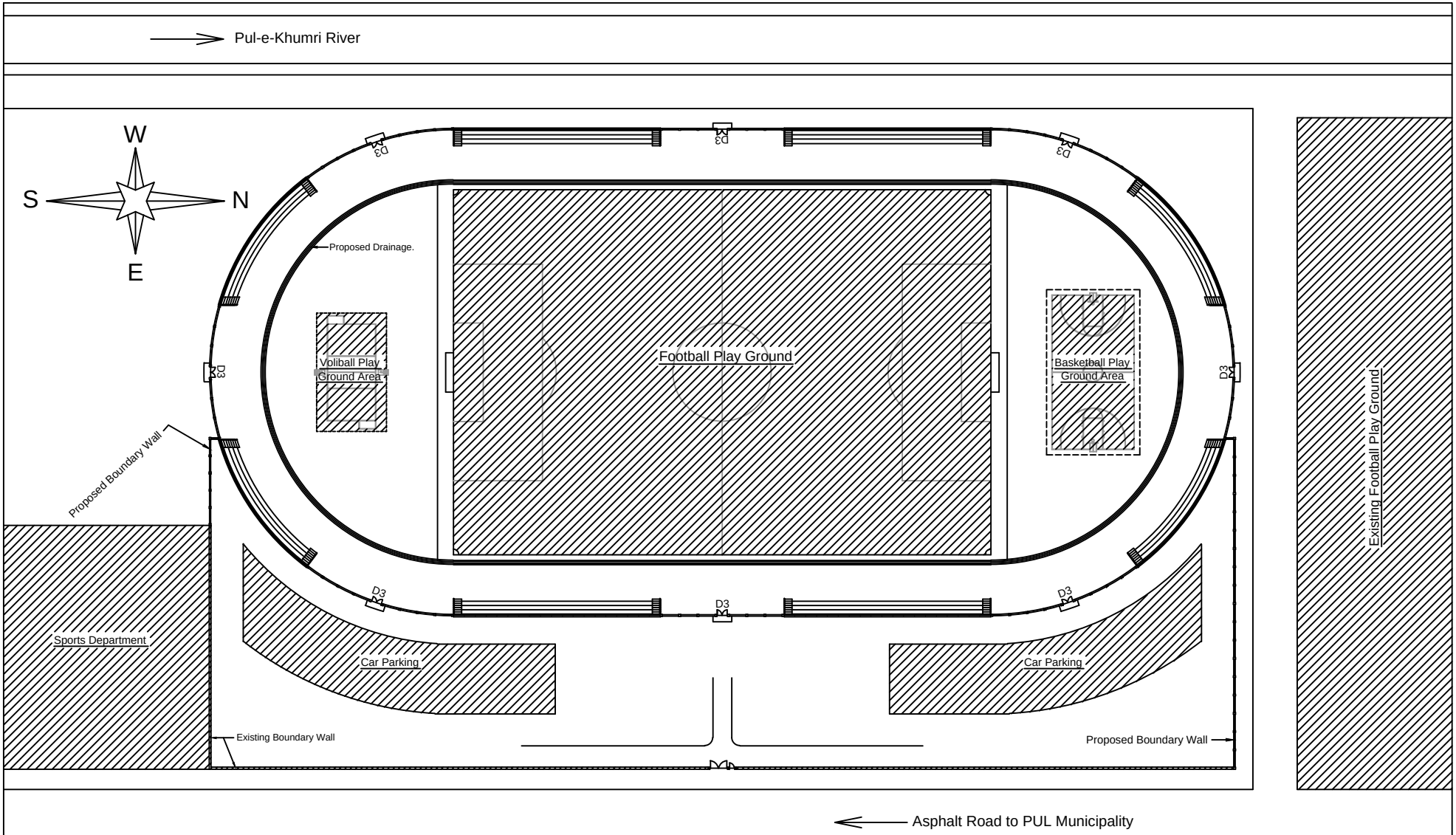

		Name	Position/Organization	
Drawing Title: Football Play Ground Genral Layout Plan	Surveyed by:	[redacted]	M Engineering Advisor RAMP-UP N	Project Name: Pul-e-Khumri Football Playground Improvement
	Estimated by:		M Engineering Advisor RAMP-UP N	
	Conceptual Approved by:		Deputy SDAG	
Drawing Number: 1/11	Conceptual Approved by:		Mayor of Pul-e-Khumri	
	Technical Checked by:		Engineering Director RAMP-UP N	Date: June 2013
	Approved by:		Project Manager RAMP-UP N	

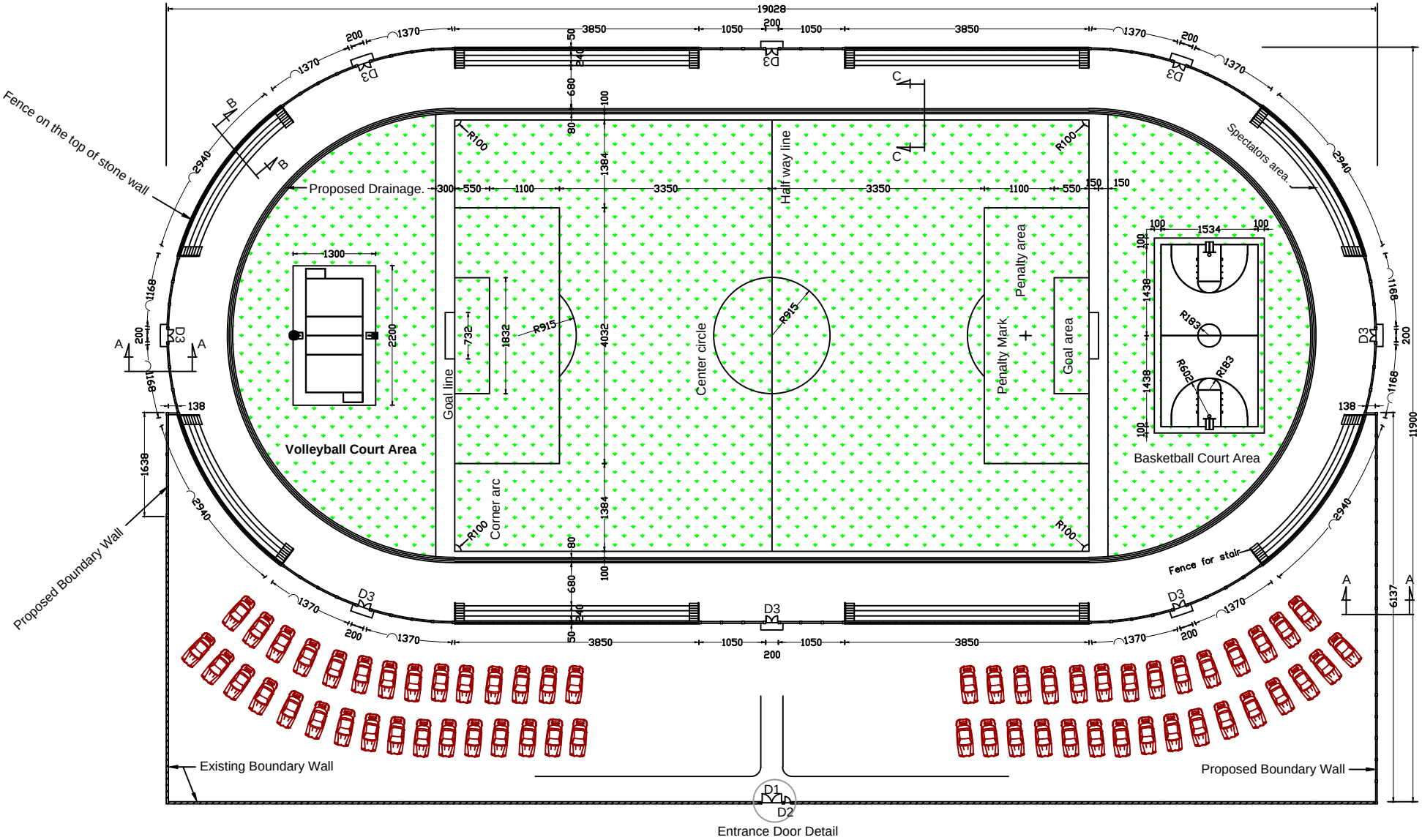

Drawing Title: Football Play Ground Layout Plan		Name	Position/Organization	Project Name: Pul-e-Khumri Football Playground Improvement
	Surveyed by:	[redacted]	M Engineering Advisor RAMP-UP N	
	Estimated by:	[redacted]	M Engineering Advisor RAMP-UP N	
	Conceptual Approved by:	[redacted]	Deputy SDAG	
	Conceptual Approved by:	[redacted]	Mayor of Pul-e-Khumri	
Drawing Number: 2/11	Technical Checked by:	[redacted]	Engineering Director RAMP-UP N	Date: June 2013
	Approved by:	[redacted]	Project Manager RAMP-UP N	

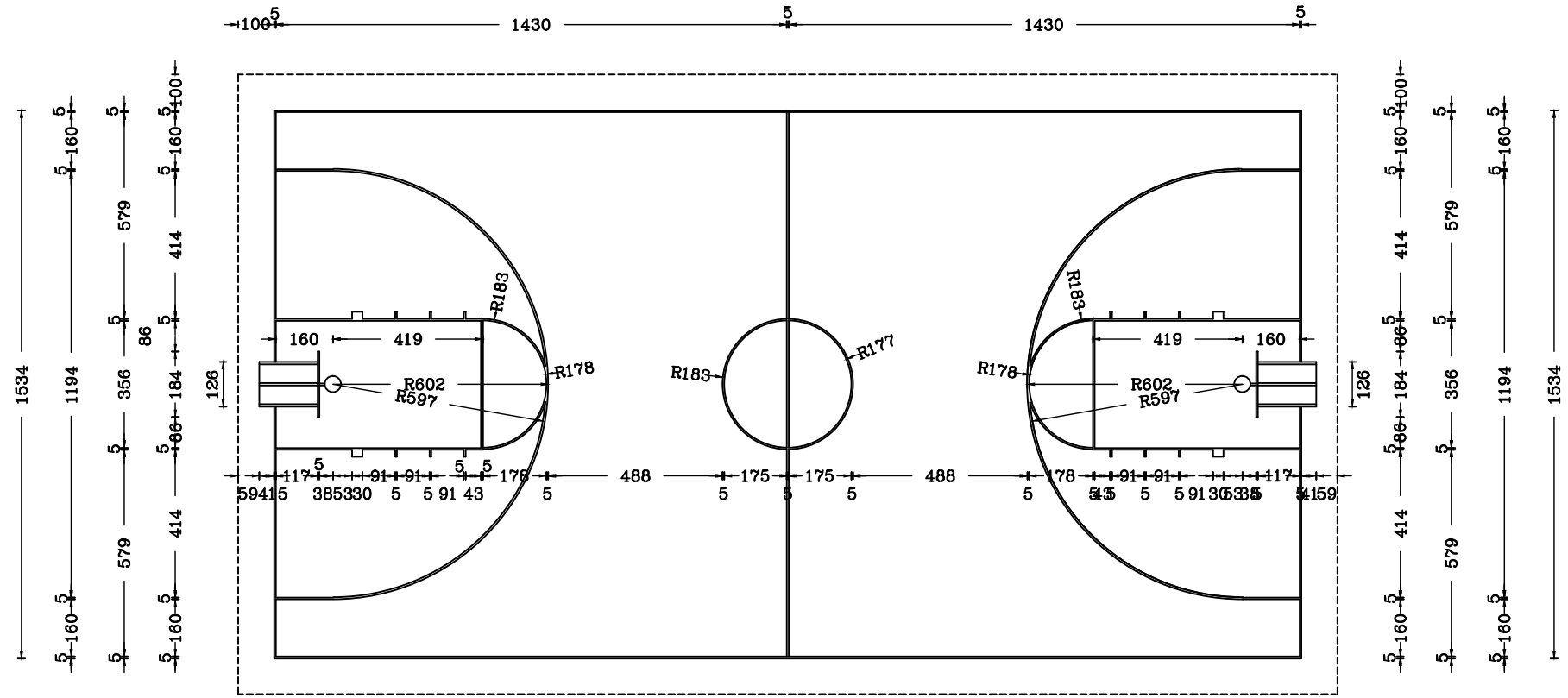

NOTE:

1: This area (30.78 x 17.34)m should be excavated 15cm down from the finishing level of the football court.
2: the excavated area should be compacted as well.
3: 10cm crashed stone to be paved and compacted.
4: 10cm PCC, on the top of compacted crash stone to be placed within at least (2 X 2)m glass frames.
5: the marking line of the Basketball Court should be done by with paint, 5cm wide line (best quality of paint which is special for road marking).

Basketball Court Layout Plan

		Name	Position/Organization	
Drawing Title: Basketball Play ground	Surveyed by:	[redacted]	M Engineering Advisor RAMP–UP N	Project Name: Pul–e–Khumri Football Playground Improvement
	Estimated by:		M Engineering Advisor RAMP–UP N	
	Conceptual Approved by:		Deputy SDAG	
Drawing Number: 3/11	Conceptual Approved by:		Mayor of Pul–e–Khumri	
	Technical Checked by:		Engineering Director RAMP–UP N	Date: June 2012
	Approved by:		Project Manager RAMP–UP N	

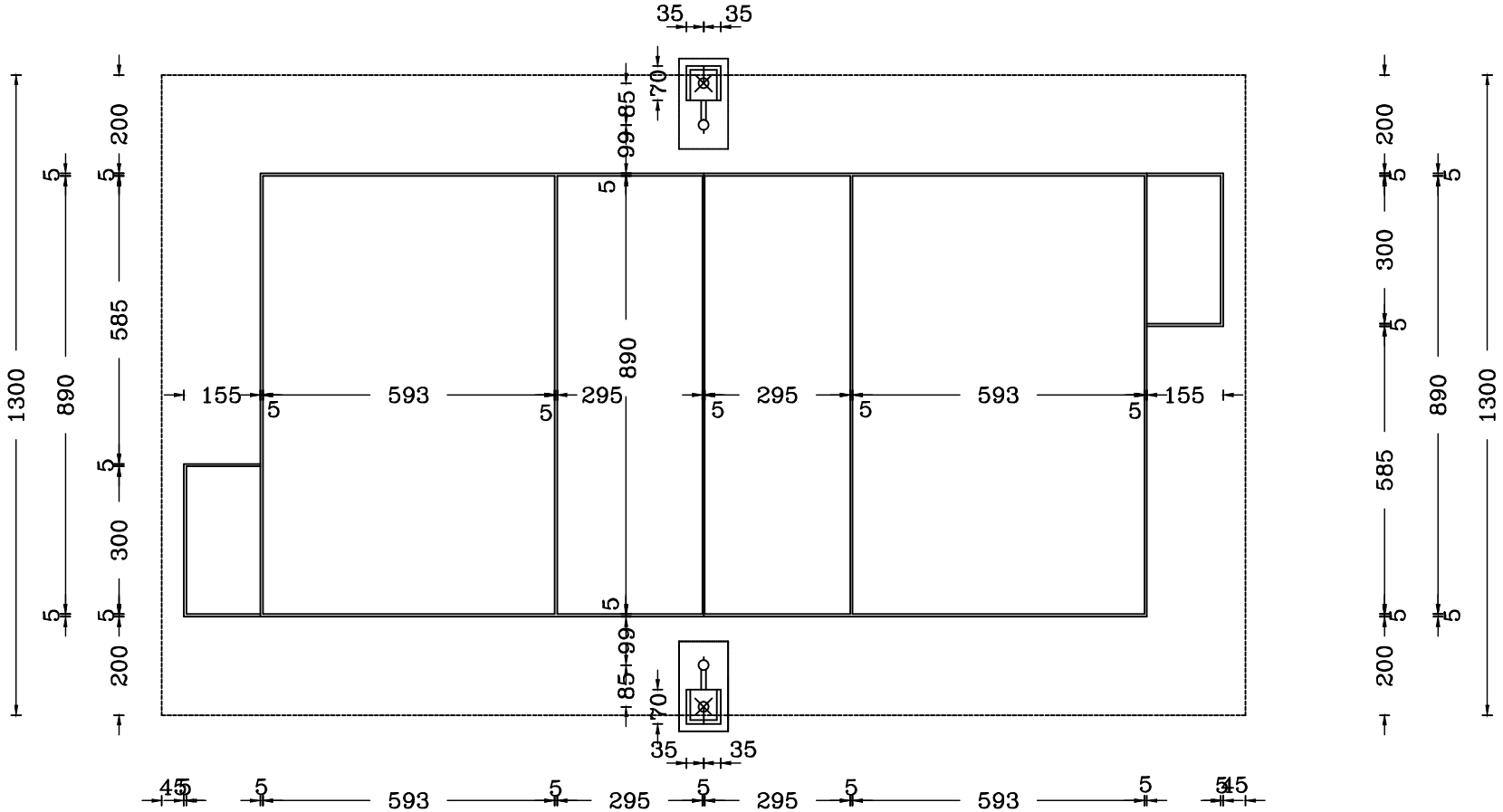

NOTE:

1: This area (22 x 13)m should be excavated 15cm down from the finishing level of the football court.
2: the excavated area should be compacted as well.
3: 10cm crashed stone to be paved and compacted.
4: 10cm PCC, on the top of compacted crash stone to be placed within at least (2 X 2)m glass frames.
5: the marking line of the Volleyball Court should be done by with paint, 5cm wide line (best quality of paint which is special for road marking).

Volleball Court Layout Plan

		Name	Position/Organization	
Drawing Title: Volleyball Play ground	Surveyed by:	[redacted]	M Engineering Advisor RAMP–UP N	Project Name: Pul–e–Khumri Football Playground Improvement
	Estimated by:		M Engineering Advisor RAMP–UP N	
	Conceptual Approved by:		Deputy SDAG	
Drawing Number: 4/11	Conceptual Approved by:		Mayor of Pul–e–Khumri	
	Technical Checked by:		Engineering Director RAMP–UP N	Date: June 2013
	Approved by:		Project Manager RAMP–UP N	

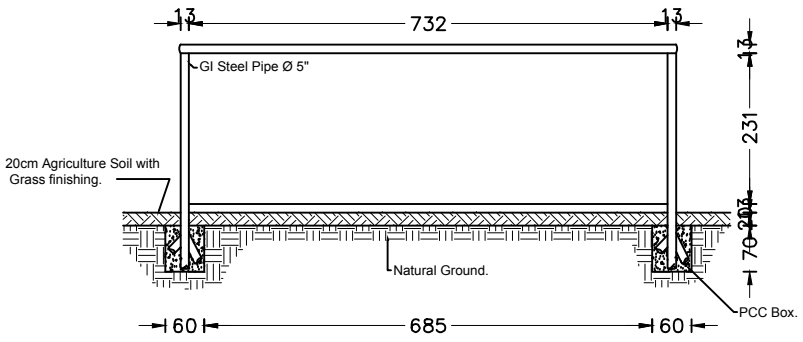

Section B–B

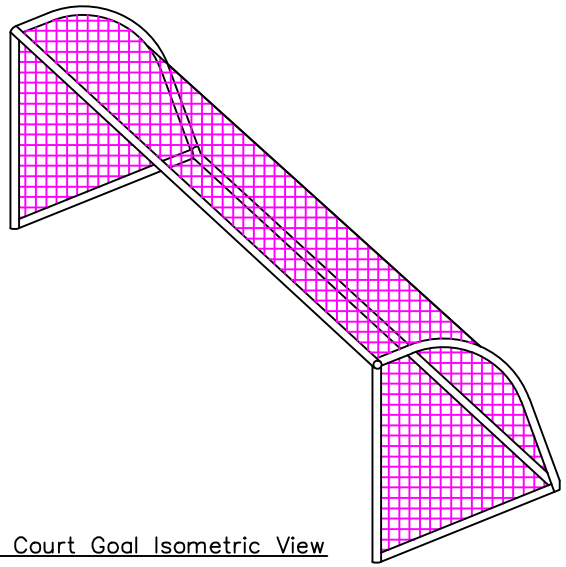

Football Court Goal Isometric View

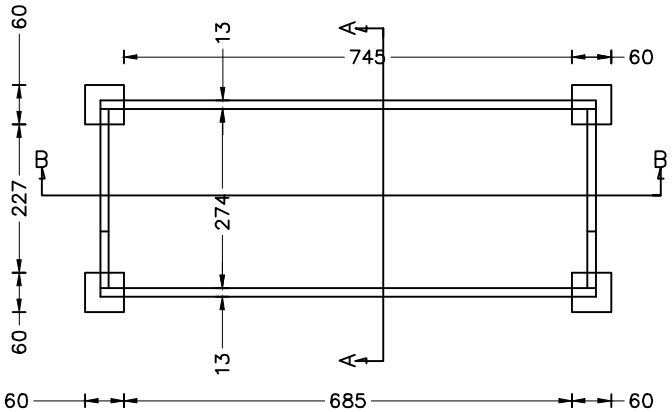

Football Court Goal Plan

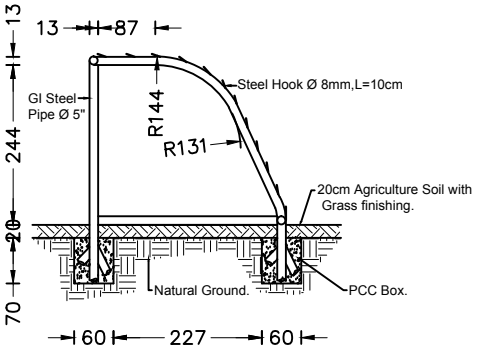

Section A–A

		Name	Position/Organization	
Drawing Title: Football Play ground Goal Detail	Surveyed by:	[redacted]	M Engineering Advisor RAMP–UP N	Project Name: Pul–e–Khumri Football Playground Improvement
	Estimated by:		M Engineering Advisor RAMP–UP N	
	Conceptual Approved by:		Deputy SDAG	
Drawing Number: 5/11	Conceptual Approved by:		Mayor of Pul–e–Khumri	
	Technical Checked by:		Engineering Director RAMP–UP N	Date: June 2013
	Approved by:		Project Manager RAMP–UP N	

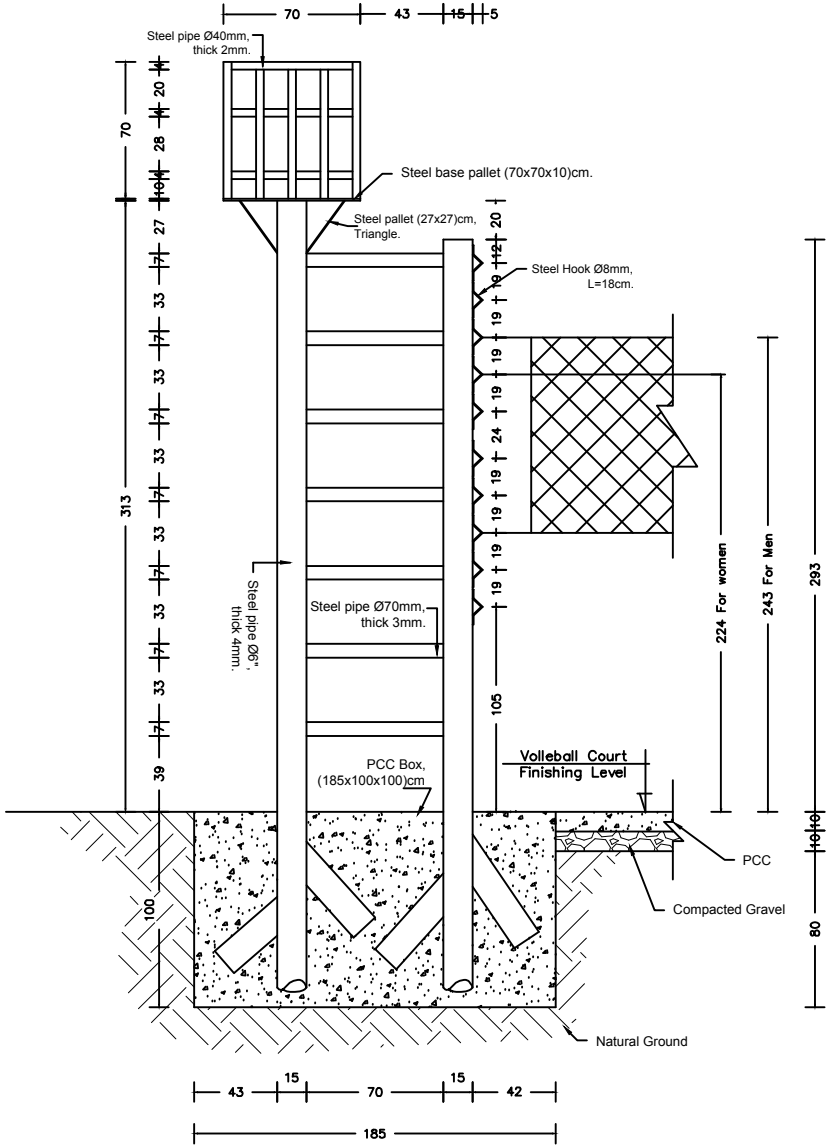

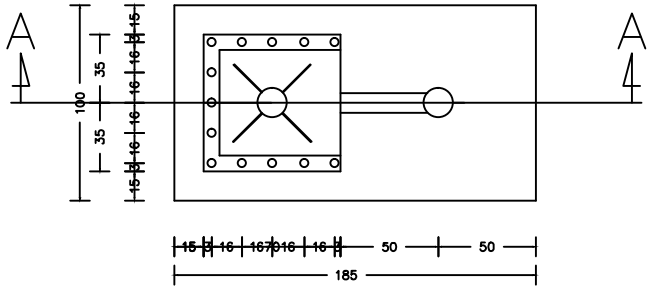

Volleball Court Layout Plan

		Name	Position/Organization	
Drawing Title: Volleyball Play Ground Net	Surveyed by:	[redacted]	M Engineering Advisor RAMP–UP N	Project Name: Pul–e–Khumri Football Playground Improvement
	Estimated by:		M Engineering Advisor RAMP–UP N	
	Conceptual Approved by:		Deputy SDAG	
Drawing Number: 6/11	Conceptual Approved by:		Mayor of Pul–e–Khumri	
	Technical Checked by:		Engineering Director RAMP–UP N	
	Approved by:		Project Manager RAMP–UP N	Date: June 2013

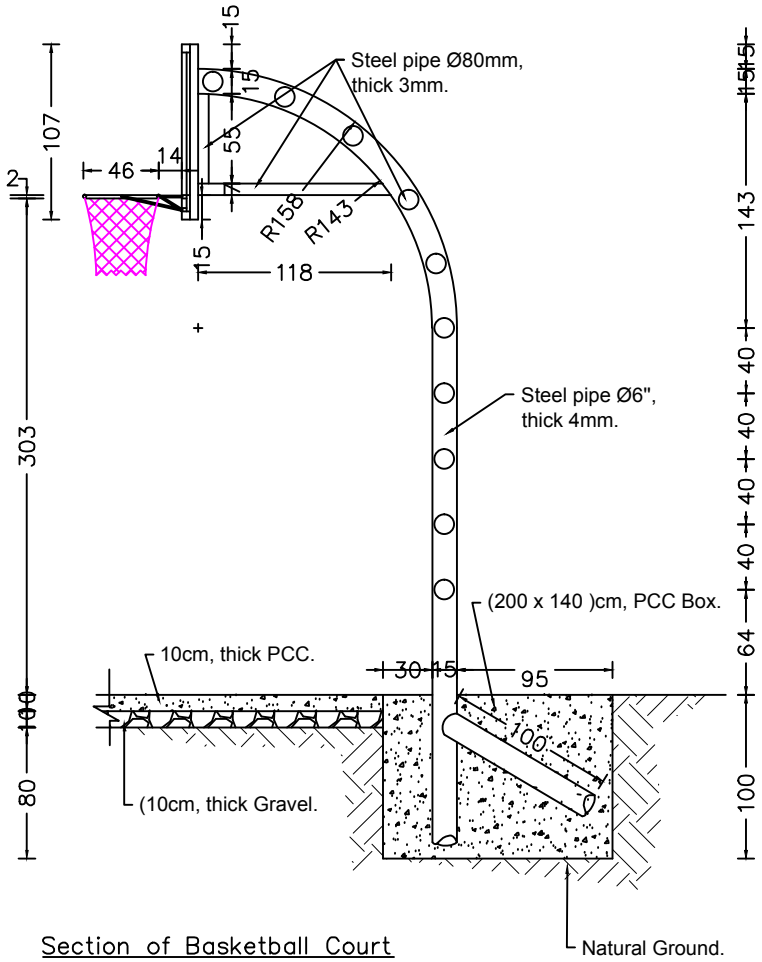

Section of Basketball Court

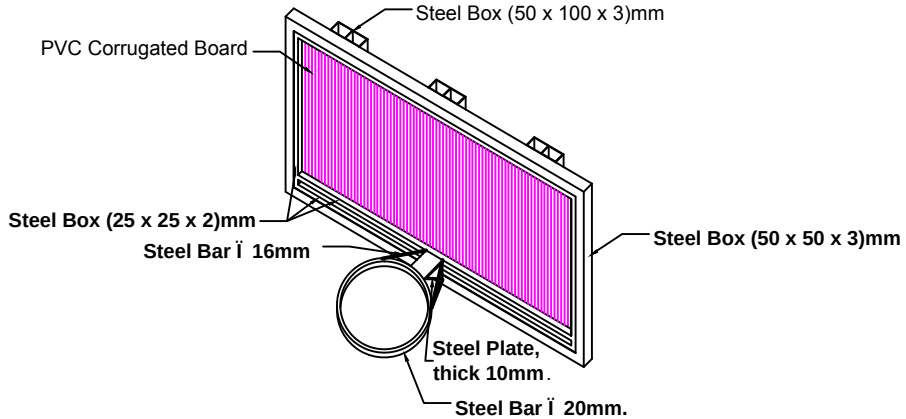

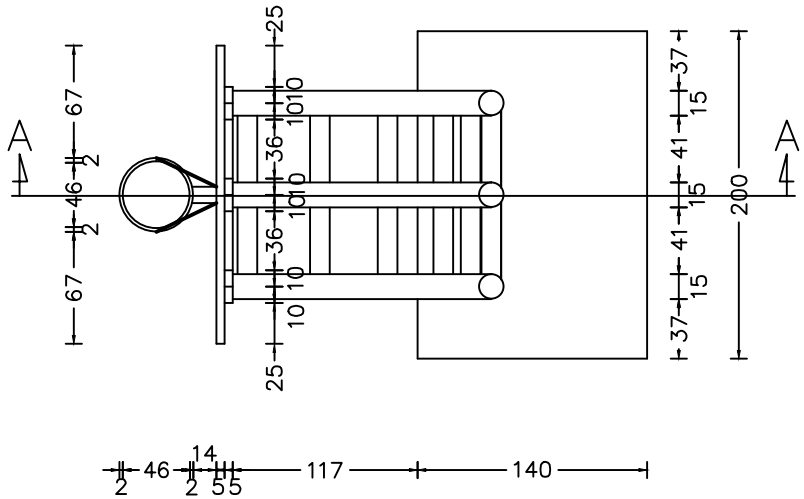

Basketball Court

		Name	Position/Organization	
Drawing Title: Basketball Play Ground Goal detail	Surveyed by:	[redacted]	M Engineering Advisor RAMP–UP N	Project Name: Pul–e–Khumri Football Playground Improvement
	Estimated by:		M Engineering Advisor RAMP–UP N	
	Conceptual Approved by:		Deputy SDAG	
Drawing Number: 7/11	Conceptual Approved by:		Mayor of Pul–e–Khumri	
	Technical Checked by:		Engineering Director RAMP–UP N	
	Approved by:		Project Manager RAMP–UP N	Date: June 2013

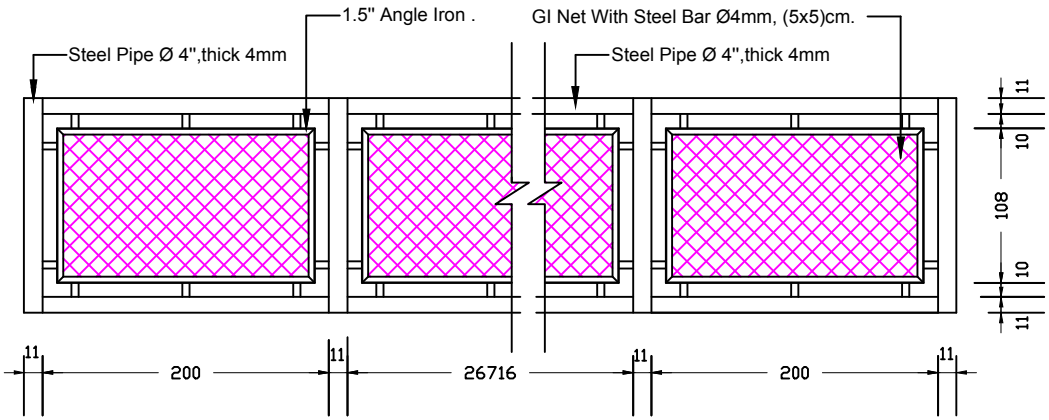

fence view
L=271.6m

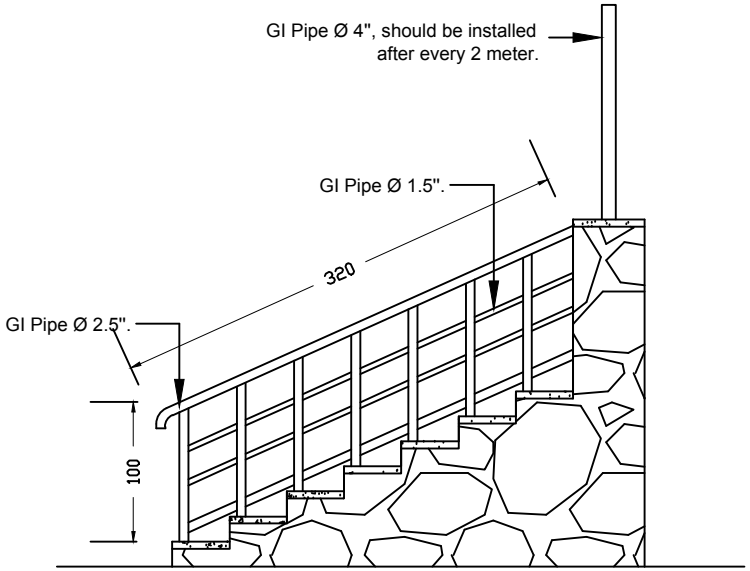

Stair Fence detail

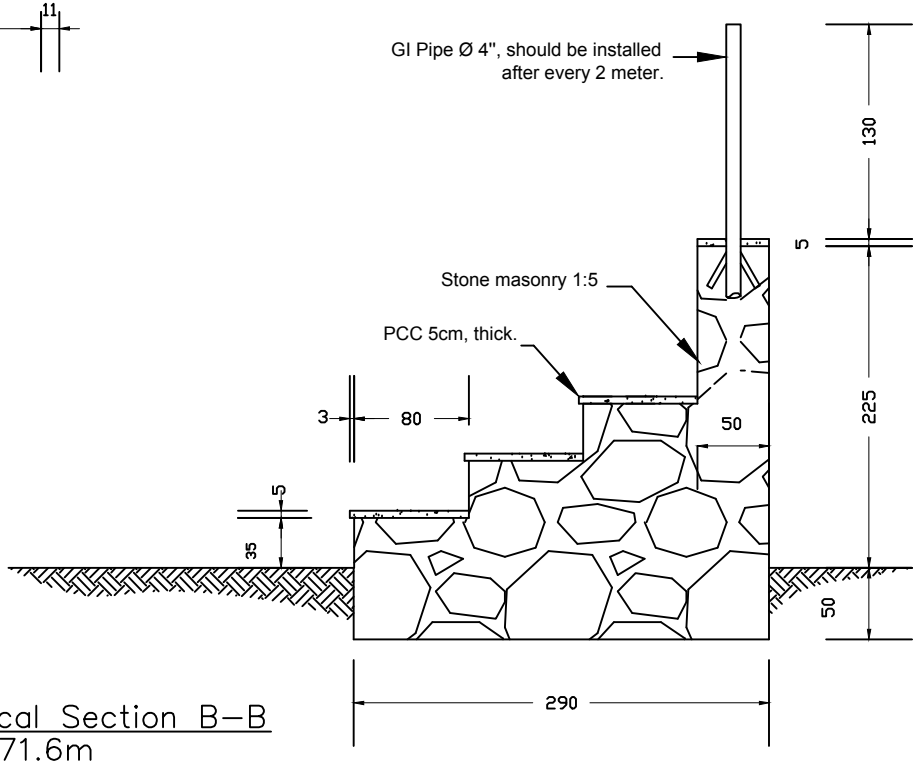

Typical Section B–B
L=271.6m

		Name	Position/Organization	
Drawing Title: Typical section of spectators area and fence view and stair fence detail	Surveyed by:	[redacted]	M Engineering Advisor RAMP–UP N	Project Name: Pul–e–Khumri Football Playground Improvement
	Estimated by:		M Engineering Advisor RAMP–UP N	
	Conceptual Approved by:		Deputy SDAG	
Drawing Number: 8/11	Conceptual Approved by:		Mayor of Pul–e–Khumri	
	Technical Checked by:		Engineering Director RAMP–UP N	
	Approved by:		Project Manager RAMP–UP N	Date: June 2013

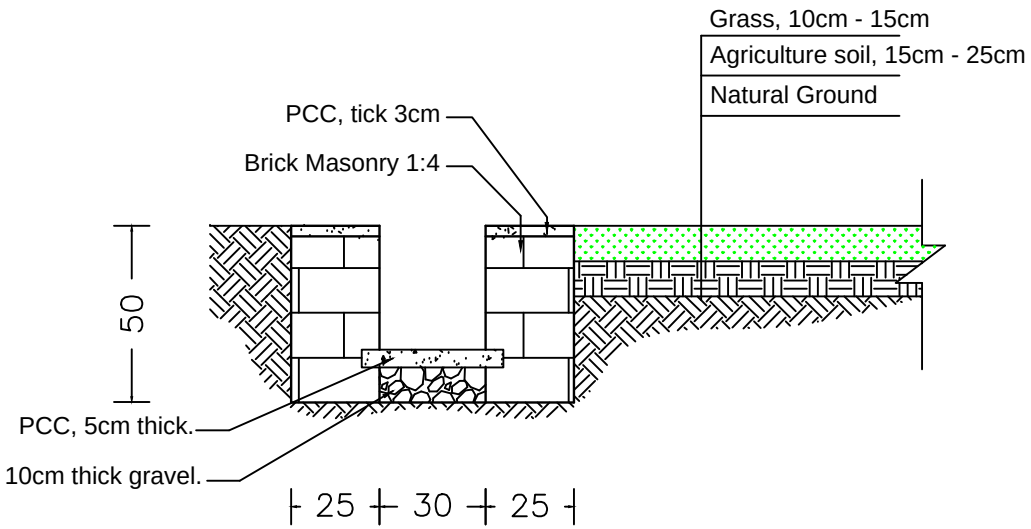

Derange Typical Section C-C
L=424m

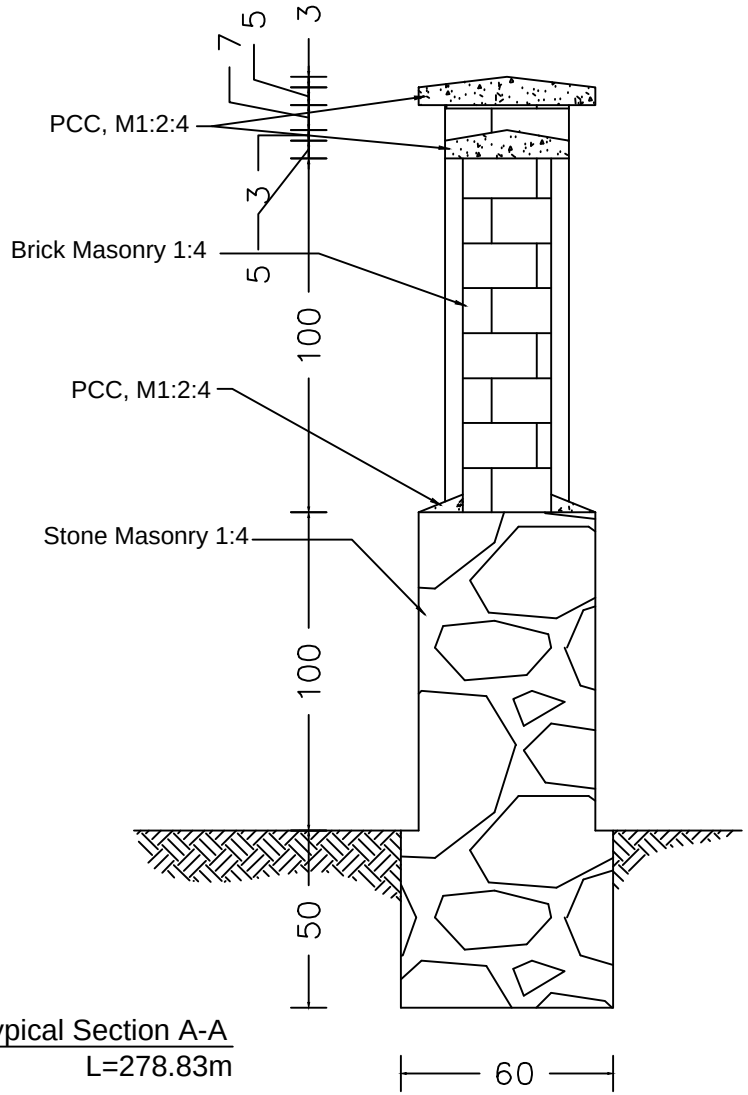

Boundry wall Typical Section A-A
L=278.83m

		Name	Position/Organization	
Drawing Title: Boundary wall typical section and drainage section.	Surveyed by:	[redacted]	M Engineering Advisor RAMP–UP N	Project Name: Pul–e–Khumri Football Playground Improvement
	Estimated by:		M Engineering Advisor RAMP–UP N	
	Conceptual Approved by:		Deputy SDAG	
Drawing Number: 9/11	Conceptual Approved by:		Mayor of Pul–e–Khumri	
	Technical Checked by:		Engineering Director RAMP–UP N	
	Approved by:		Project Manager RAMP–UP N	Date: June 2013

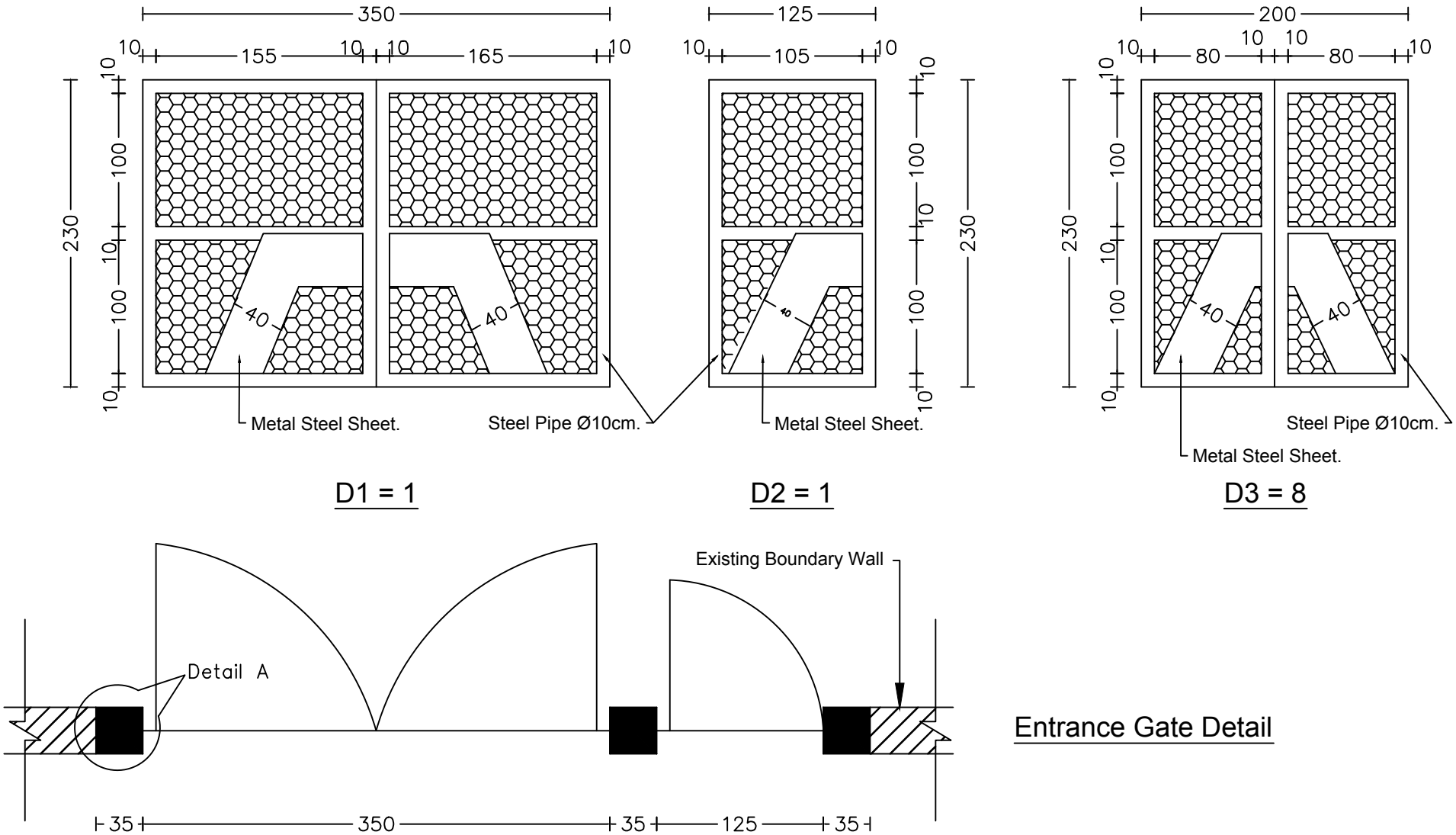

Entrance Gate Detail

		Name	Position/Organization	
Drawing Title: Entrance Gate Detail and view	Surveyed by:	[redacted]	M Engineering Advisor RAMP–UP N	Project Name: Pul–e–Khumri Football Playground Improvement
	Estimated by:		M Engineering Advisor RAMP–UP N	
	Conceptual Approved by:		Deputy SDAG	
Drawing Number: 10/11	Conceptual Approved by:		Mayor of Pul–e–Khumri	
	Technical Checked by:		Engineering Director RAMP–UP N	Date: June 2013
	Approved by:		Project Manager RAMP–UP N	

Detail A–A

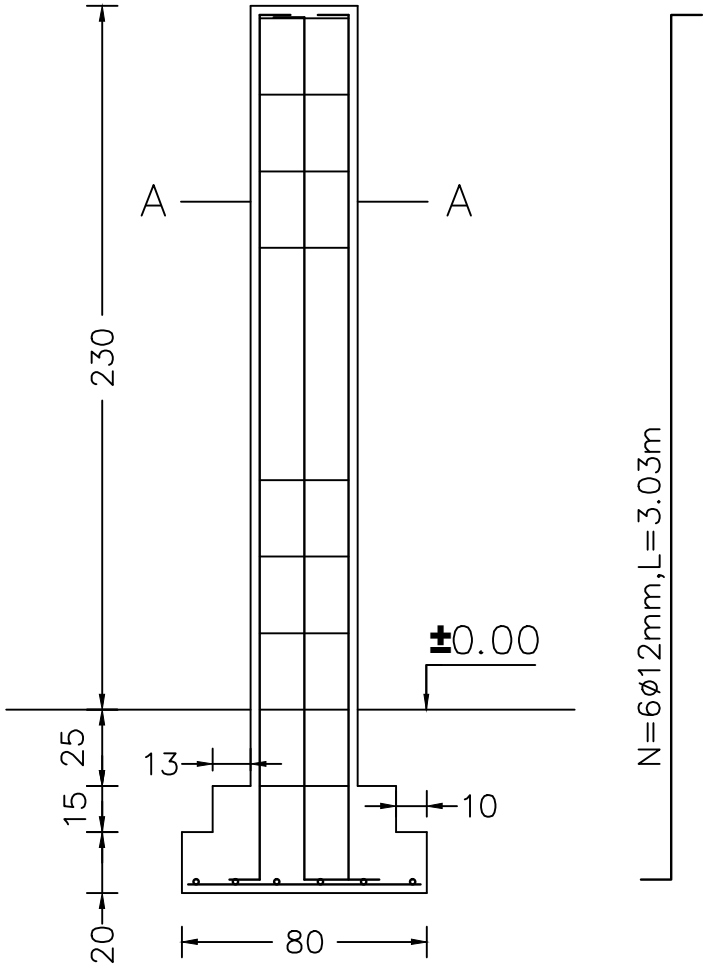

Section A_A

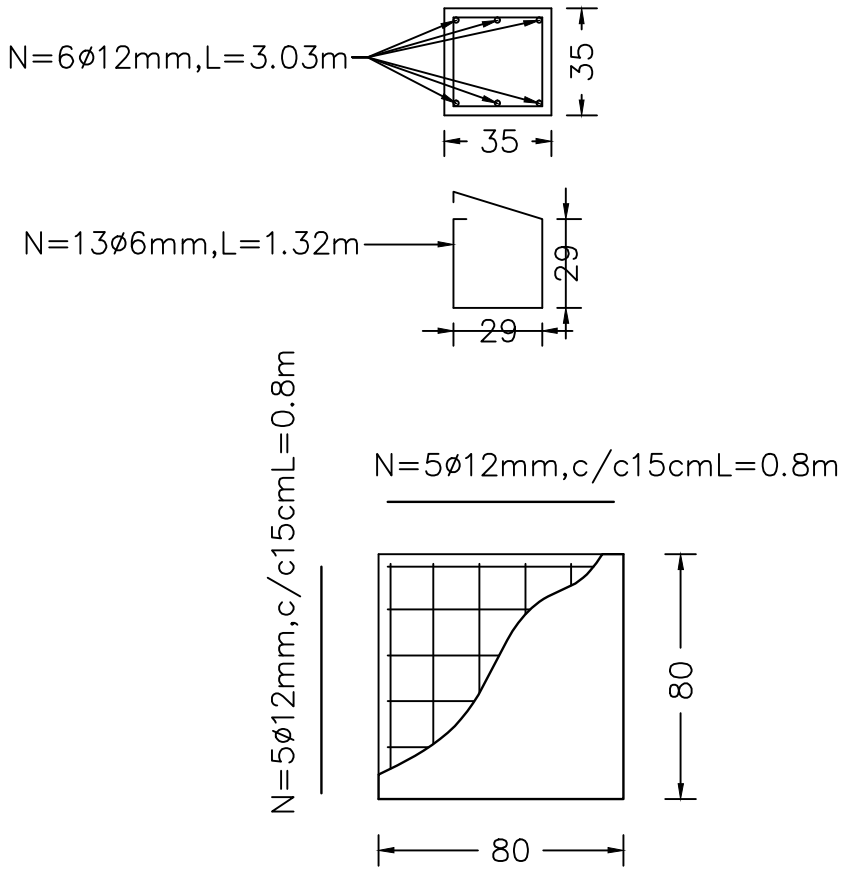

		Name	Position/Organization	
Drawing Title: Colmun detail	Surveyed by:	[redacted]	M Engineering Advisor RAMP–UP N	Project Name: Pul–e–Khumri Football Playground Improvement
	Estimated by:		M Engineering Advisor RAMP–UP N	
	Conceptual Approved by:		Deputy SDAG	
Drawing Number: 11/11	Conceptual Approved by:		Mayor of Pul–e–Khumri	
	Technical Checked by:		Engineering Director RAMP–UP N	
	Approved by:		Project Manager RAMP–UP N	Date: June 2013

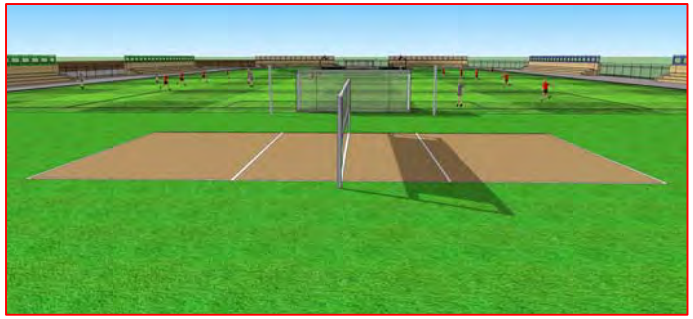

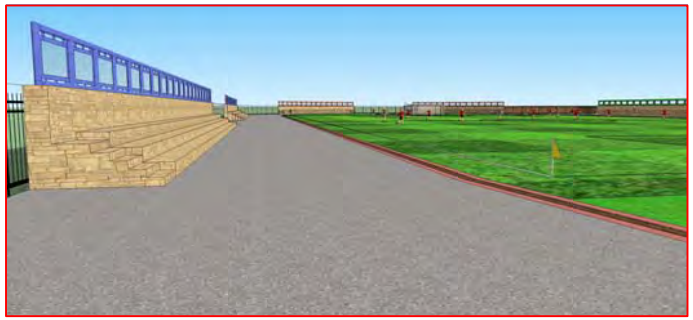

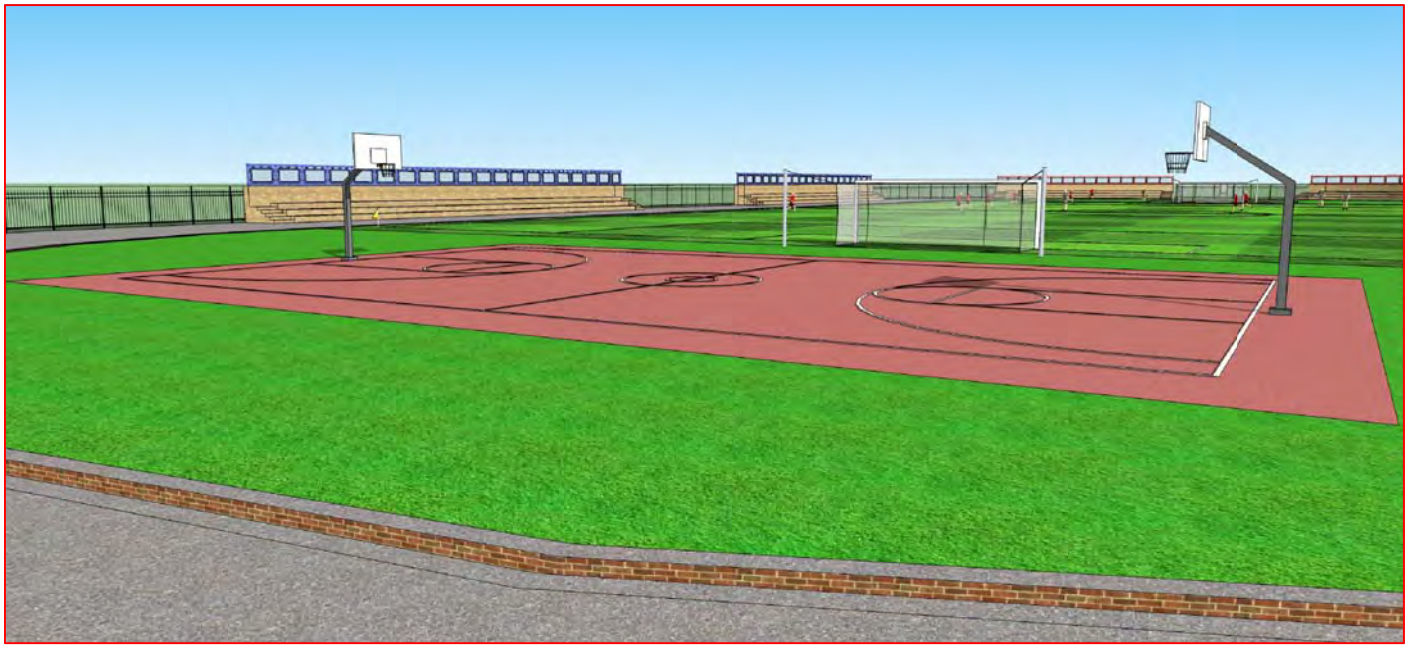

APPENDIX B – PUL-E-KHUMRI SPORTS STADIUM IMPROVEMENT PROJECT PROPOSAL

Regional Afghan Municipalities Program for Urban Populations

(RAMP UP-North)

Regional Command North

Project Proposal

Province Baghlan

Municipality: Pul-e-Khumri

Project Number: RUN-P-PUL-004

Project Name: Construction of a Stadium

Project Duration: 3 months

Estimated Project Cost: [redacted]

Date: January, 17, 2013

MGRS Coordinate of Project Area: 42SVE7400877465

GPS Coordinates:

N= 35°55'34.97"N

E =68°42'48.9"E

I. Problem Statement

Currently, Pul-e-Khumri Municipality lacks an area for the municipality's youth to play sports, which has been recognized as a problem in the city. According to the municipality's Master Plan, land is

currently allocated for this purpose, but that land is currently used as an informal trash disposal site and also as an informal toilet area, which has the potential to negatively affect the health of citizens, including those who are coming for exercise and sports.

II. Solution Statement

On September 27, 2012, a joint meeting of the Pul-e-Khumri Mayor, the Service Delivery Advisory Group (SDAG) (13 men and 5 women, for a total of 18 SDAG members), and the Public Administration Advisory Group (PAAG) (5 male PAAG members) took place with a total of 23 participants. The participants prioritized the construction of a stadium for the youth in the municipality. The participants pointed out that this project would also decrease contamination from informal waste in the city. A preliminary joint feasibility study was completed in coordination with the Municipal Engineer and SDAG members, which confirmed that the land for the stadium belongs to the municipality. The municipality also anticipates establishing a public-private partnership to operate and maintain the stadium after project closeout.

III. Beneficiaries

The direct beneficiaries will be all Pul-e-Khumri residents, estimated at 98,900 people (48,200 women and 50,700 men). The indirect beneficiaries will include other people who come from other parts of the province or country.

IV. Scope of Work:

A. Methodology:

The proposed project requires construction work, which will be sub-contracted to a private company. The sub-contractor will be selected through a transparent procurement process, and the sub-contractor will complete the required activities under supervision of the Municipality and RAMP UP-North team.

B. Goods and Services Provided by RAMP UP North:

The project includes improvement and construction of the following activities; it is anticipated that one subcontract will be awarded to complete the following tasks.

- Construction of Brick Masonry Drainage 424 meters,
- Construction of 278.8 meter boundary wall,
- Construction of Spectators Area 271.6 meters,
- Improvement of Football Pitch,
- Construction of Volleyball Courts 22x13 meter,
- Construction of Basketball Court,
- Installation of Entrance Gate.

C. Goods and Services Contributed by Municipality (estimated value of [redacted]

Construction of a Stadium	No	Quantity	Unit	Unit Price	Total Price
Site preparation (cutting, filling, leveling and compacting as per site needed)	1	22,610	m^2	10.0	[redacted]

Supply and installation of green grass (including the place preparation, filling clay soil with preparation, with all the requirements completely)	1	10,375	m^2	40.0	[redacted]
Estimated Value of Goods and Services Contributed by Municipality:					[redacted]

All subcontractors for RAMP UP North activities are required to hire local laborers for all unskilled labor positions. These laborers will be hired from within the community of the nearby residents and the beneficiaries of RAMP UP North activities. The subcontractor shall be responsible for providing documentation of the number of both skilled and unskilled laborers and number of days worked.

Cost Estimation for Goods and Services Provided by RAMP UP North

RAMP UP – North
Construction of a Stadium

Bill of Quantities

Description	No	LM	WM	H M	Quantity	Unit	Unit Price (AFA)	Total Price Each Item (AFA)	Remarks
Construction of Brick Masonry Drainage 424 meters :- Activities included: excavation, back fill, compaction, crushed aggregate under plain cement concrete (PCC) 5cm thick (M150), side wall brick masonry (1:4) and plastering of drainage side walls, with all related activities as per drawing and technical specification.									
Excavation for Drainage	1	424	0.8	0.5	170	m^3		-	
Crushed Stone under PCC, For Drainage, and 10 cm thick.	1	424	0.3	0.1	13	m^3		-	
PCC For Drainage	1	424	0.4	0.05	8	m^3		-	
PCC for top of drainage side wall	2	424	0.25	0.03	6.36	m^3		-	
Drainage Side Wall Brick Masonry M1:4	2	424	0.25	0.5	106	m^3		-	
Plastering for drainage side walls	2	424		0.35	297	m^2		-	
Construction of 278.8 meter Boundary wall :- The activities included: Excavation for foundation, provide and laying stone masonry, brick masonry, cement plaster (1:4), Plain Cement Concrete (PCC) M150 for parapet on top of brick wall and stone including form works. Stones masonry should be pointing with M (1:3) in perfect line and level. Apply three coats of 100% plastic paint with all related activities according to the drawing and technical specification. The technical specification for the boundary wall is as follows:									
Excavation of foundation	1	278.8	0.6	0.5	84	m^3		-	
Boundary wall foundation stone masonry 1:4	1	278.8	0.6	0.5	84	m^3		-	
Boundary wall super structure stone masonry 1:4	1	278.8	0.5	1	139	m^3		-	
Boundary Wall pillar brick masonry 1:4	97	0.35	0.35	1.15	14	m^3		-	
Boundary Wall brick masonry 1:4	1	244.9	0.25	1	61	m^3		-	
PCC on parapet of brick masonry pillars	97	0.5	0.5	0.05	1.21	m^3		-	
PCC on parapet of brick masonry pillars	97	0.5	0.5	0.035	0.85	m^3		-	
PCC on parapet of brick masonry wall	1	244.9	0.35	0.05	4.29	m^3		-	
PCC on parapet of brick masonry wall	1	244.9	0.35	0.035	3.00	m^3		-	
PCC on stone wall	2	278.8	0.13	0.05	3.62	m^3		-	

Plastering of brick masonry pillars	97	0.9		1.45	127	m^2		-	
Plastering of brick masonry pillars	97	0.7		0.275	19	m^2		-	
Plastering of brick masonry pillars	97	0.5		0.5	24	m^2		-	
Plastering of brick masonry wall	2	244.9		1.125	551	m^2		-	
Plastering for top of brick masonry wall parapet	1	244.9		0.35	86	m^2		-	
Pointing of stone (1:3)	2	278.8		1	558	m^2		-	
Three coats of plastic painting					696	m^2		-	
Construction of Spectators Area 271.6 meters: - Activities included: Excavation for foundation, stone masonry M (1:5), Plain Cement Concrete (M150) including form work. Pointing of stone masonry with M (1:3) in perfect line and level. Supply and installation of fence for backside of the spectators area height 1.3 meters with (GI pipe dia 4", Angel iron 2", GI mesh size 5x5 cm and dia 4mm). Supply and installation of handrail for one side of stairs based on the drawing including anti rust and 3 coat oil painting with all related activities. (See drawings)									
Foundation Excavation	1	271.6	2.9	0.5	394	m^3		-	
Spectators area stone masonry 1:5 for foundation	1	271.6	0.5	2.75	373	m^3		-	
Spectators area stone masonry 1:5 for super structure	1	271.6	0.8	1.65	359	m^3		-	
Spectators area stone masonry 1:5 for super structure	1	271.6	0.8	1.25	272	m^3		-	
Spectators area stone masonry 1:5 for super structure	1	271.6	0.8	0.85	185	m^3		-	
PCC for spectators area M150	3	271.6	0.83	0.05	34	m^3		-	
PCC for top of stone wall M150	1	271.6	0.5	0.05	7	m^3		-	
Pointing of stone (1:3)	1	271.6		2.25	611	m^2		-	
Pointing of stone (1:3)	1	271.6		1.05	285	m^2		-	
Pointing of stone (1:3)	3	271.6		0.35	285	m^2		-	
Fencing work with GI pipe dia 4" including oil paint as per drawing	1	271.6		1.3	353	m^2		-	
Fencing work for one side of stair as per drawing	16	3.2		1	51	m^2		-	
Football Pitch: - Activities included: Supply and installation of football goals in tow side of play ground with GI pipe dia 6" and marking line for entire playground with all required activities Complete. (See drawing)									
Supply and installation of Football Goals GI pipe 6 inch dia (as per drawing)					1	Lamp Sum		-	
PCC for installation of football goals	4	0.6	0.6	0.7	1.008	m^3		0	
Marking line for entire playground with all required activities such as excavation, supply and placing of bricks, leveling and painting (complete).	1				1	Lamp Sum		0	

Volleyball Courts 22x13 meter :- Activities included: Supply and placing Plain Cement Concrete (PCC) M: 150 (1:2:4) including formworks and expansion joints for the Volleyball Court with its all related activities. Crash aggregate and fine sand should be used in concert. Pavement under PCC thick 10cm with excavation and compaction as per area needed with all required activities Supply and installation of volleyball poles, net and seat for referee (see the drawing). Marking line for entire playground with all required activities such as painting (road type).									
Crushed Stone under PCC for Volleyball Play Ground, 10cm thick and excavation as per area needed with compacting.	1	22	13	0.1	29	m^3		-	
PCC for volleyball playground area M150	1	22	13	0.1	28.60	m^3		-	
PCC for installation of volleyball net	2	1.85	1	1	3.70	m^3		-	
Supply and installation of volleyball court tools such as: poles, net and seat for referee with all required activities					1	Lamp Sum		-	
Marking line of volleyball courts					1	Lamp Sum		-	
Basketball Court :- Activities included: Supply and placing Plain Cement Concrete (PCC) M: 150 (1:2:4) including formworks and expansion joints for the Volleyball Court with its all related activities. Crash aggregate and fine sand should be used in concert. Pavement under PCC thick 10cm with excavation and compaction as per area needed with all required activities Supply and installation of basketball poles goal and net (see the drawing). Marking line for entire playground with all required activities such as painting (road type). (See drawings)									
Crushed Stone under PCC for Volleyball Play Ground, 10cm thick and excavation as per area needed with compacting.	1	30.78	17.34	0.1	53	m^3		-	
PCC for basketball playground area M150	1	30.78	17.34	0.1	53.37	m^3		-	
PCC for installation of basketball goals	2	2	1.4	1	5.60	m^3		-	
Supply and installation of volleyball court tools such as: basketball poles goal and net with all required activities based on the drawings.					1.00	LS		-	
Marking of Basketball yard.					1.00	LS		-	
Entrance Gate:- Supply and installation of one gate 3.5x2.3 meter and eight gates 2x2.3 meter plus on door 1.25x2.3 meter as per drawing details. The gate should have 2 number of latch locks, 3 numbers of hinges on each leave. The gates should montage in to the brick masonry and RCC columns properly									
Steel Gate with oil paint as per drawing, size (3.25 x 2.3)m	1	3.5		2.3	8	m^2		-	
Steel Gate with oil paint as per drawing, size (1.20 x 2.3)m	1	1.2		2.3	3	m^2		-	
Steel Gate with oil paint as per drawing, size (2.0 x 2.3)m	8	2		2.3	37	m^2		-	
Excavation for foundation with demolition of existing wall.	3	1	1	0.6	2	m^3		-	
RCC work for foundation including form work with steel bar as per drawing.	3	0.8	0.8	0.2	0.38	m^3		-	
RCC work for foundation including form work with steel bar as per drawing.	3	0.6	0.6	0.15	0.16	m^3		-	

RCC work for column including form work with steel bar as per drawing.	3	0.35	0.35	2.55	0.94	m^3		-	
Plastering of RCC column	3	1.4		2.55	11	m^2		-	
Plastic Paint of RCC column	3	1.4		2.55	11	m^2		-	
Branding :- Branding + Opening and closing ceremony	1				1	LS			
Estimation Cost of Goods and Services Provided by RAMP UP North:								[redacted]	

V. Involvement and Leadership of Municipal Staff in Project Selection, Development, Implementation & Monitoring and Evaluation

On September 27, 2012, a joint meeting (23 participants, of which 18 were men and 5 were women) of Public Administration Advisory Group (PAAG) and Service Delivery Advisory Group (SDAG) was held to prioritize and select the R4 project. During this meeting, they prioritized and selected Construction of a Stadium as a first priority for Pul-e-Khumri Municipality.

On December 10, 2012, a joint meeting of the SDAG (5 women and 9 men from SDAG) and PAAG (8 men) held at the municipality hall with the 22 participants to develop the project's Service Delivery Improvement Plan.

On January 16, 2013, the development of the scope of work was completed in coordination with the municipal engineer and SDAG members. The municipal officials and the SDAG are committed to be involved in the project implementation process, timely monitoring, and oversight of the project activities during the life of the project. As well, the technical department of the municipality has agreed to take part in the project cycle management of this sub-project in order to get the project done efficiently, effectively and measurably.

The Mayor of Pul-e-Khumri and the Head of Municipal Construction Department have both committed to lead municipal monitoring, evaluation, and oversight of this project along with the SDAG monitoring committee.

VI. Level of Public Participation

On September 27, 2012, a joint meeting of Public Administration Advisory Group (PAAG) and Service Delivery Advisory Group (SDAG) with 23 participants (PAAG: 8 men including Mayor, and SDAG: (5 female and 10 male) to prioritize and select the projects. During this meeting, they prioritized and selected Construction of a Stadium as a first priority for Pul-e-Khumri Municipality. SDAG members were involved in project selection, feasibility check of the project, developing of the SDIP, monitoring plan, and scope of work for the project in the meetings held on December 10, 2012, and January 16, 2013.

VII. Activity Objectives

- To improve the quality of health and the environment, especially for the youth.
- To decrease environmental pollution and contamination.
- To strengthen the relationship of the municipality with public communities.
- To increase municipal income and revenue generation.
- To provide youth with an area for sports and entertainment.
- To improve the municipality's technical capacity in project implementation and in providing sustainable service delivery.

VIII. Sustainability and Maintenance:

Municipality and Citizen Contribution (After Project Completion):

The maintenance of the stadium is an essential issue for the municipality and the SDAG. Both consider the contracting of the maintenance, operation, and revenue collection to the private sector as a critical part of sustainability. The municipality anticipates that contracting the management, operation, and maintenance of this project to the private sector will also provide a regular source of revenue to the municipality to maintain and sustain the stadium as well as provide quality services to citizens. The partnership will also increase the transparency of the revenue available to the municipality.

The municipality (PAAG members) in coordination with SDAG members, and with technical assistance from RAMP UP-North advisors has developed a sustainability and maintenance plan that explains the revenue projections from entrance fees and operation and maintenance requirements for the stadium.

SDAG members promised during meetings dated September 27, 2012, December 10, 2012 and January 16, 2013, to play an active role in the monitoring of the construction of a stadium project during its initial construction and also to monitor the operation of the project and revenue collection after project completion.

Revenue Enhancement:

It is anticipated that by improving the Pul-e-Khumri Stadium the revenue will increase as a result of the operation of the stadium, including revenue to cover the estimated operational costs (staff and maintenance costs) and a reasonable contractor profit margin. The user fee will be set by the municipality, based on the advice of SDAG and municipal officials on reasonable rates, at a 10 Afghani (US$ 0.20) entrance fee and lease of 4 canteens (Municipality will provide space inside of the park to the private sector to install 4 canteens and municipality will receive $ 50 USD on monthly basis).

Based on this estimation, the revenue collected will be enough to cover the operations and maintenance of the stadium. The municipality will receive $ 600 USD monthly and $ 5,400 USD annually.

SUSTAINABILITY ANALYSIS
FOR
CONSTRUCTION OF A STADIUM IN DISTRICT 2, PUL-E-KHUMRI

MONTHLY AND ANNUAL REVENUE GENERATION				
No. Visitors (Based on 15 Days/Month)	**Rate per User (USD)**	**Total Revenue Daily (USD)**	**Total Revenue Monthly (USD)**	**Total Revenue Annually (Based on 9 Months) (USD)**
400	0.20	80	1,200	10,800
No. of Canteen rent fee	**Rate per Day (USD)**	**Total Revenue Daily (USD)**	**Total Revenue Monthly (USD)**	**Total Revenue Annually (Based on 9 Months) (USD)**
4	50		200	1,800
Total Revenue Monthly and Annually (USD)			**1,400**	**12,600**

MONTHLY AND ANNUAL O&M EXPENSES								
Description	**Unit**	**Quantity / User**	**Quantity (Daily)**	**Quantity (Monthly)**	**Unit Cost (USD)**	**Total Cost /Day (USD)**	**Total Cost/Month (USD)**	**Total Cost /Annual (USD)**
Stadium supervisor	Person	2	0	0	100	0	200	2,400
Tickets distributor (1 male and 1 female)	Person	2	0	0	100	0	200	2,400
Maintenance /repairing	LS	0	0	0	100	0	100	1,200
Total							**500**	**6,000**

REVENUE GENERATION ANALYSIS				
Monthly Revenue (USD)	**Less Monthly O&M Expenses (USD)**	**Less Monthly Contractor Profit (USD)**	**Monthly Municipality Net Revenue (USD)**	**Annual Municipality Net Revenue (USD)**
1,400	**500 USD**	**300**	**600**	**5,400**

IX. Capacity Development:

The project will help to develop the capacity of municipal officials and staff by applying a learning –by-doing approach in terms of planning , implementing , monitoring and managing during the following projects activities:

- Project management
- Project Procurement and management
- Public Works ,Monitoring & Evaluation
- Public Private Partnership

X. Unique Aspects of Project:

- The construction of stadium has the potential public-private partnership. Areas for additional PPP include collaborating with business on stadium development in exchange for space for advertisements, and leasing out the canteens to a private contractor.
- Provide a good and sufficient football stadium to Pul-e-Khumri Municipality.
- Increase the availability of public stadium facilities and accessibilities in Pul-e- Khumri to meet public demand, and improve sanitation and health conditions within the city.
- Increase improvement of the environmental health of the citizen by involvement of the community increasing public participation.
- Increase the capacity of the Pul-e- Khumri Municipality in project planning and implementation

XI. Sketches:

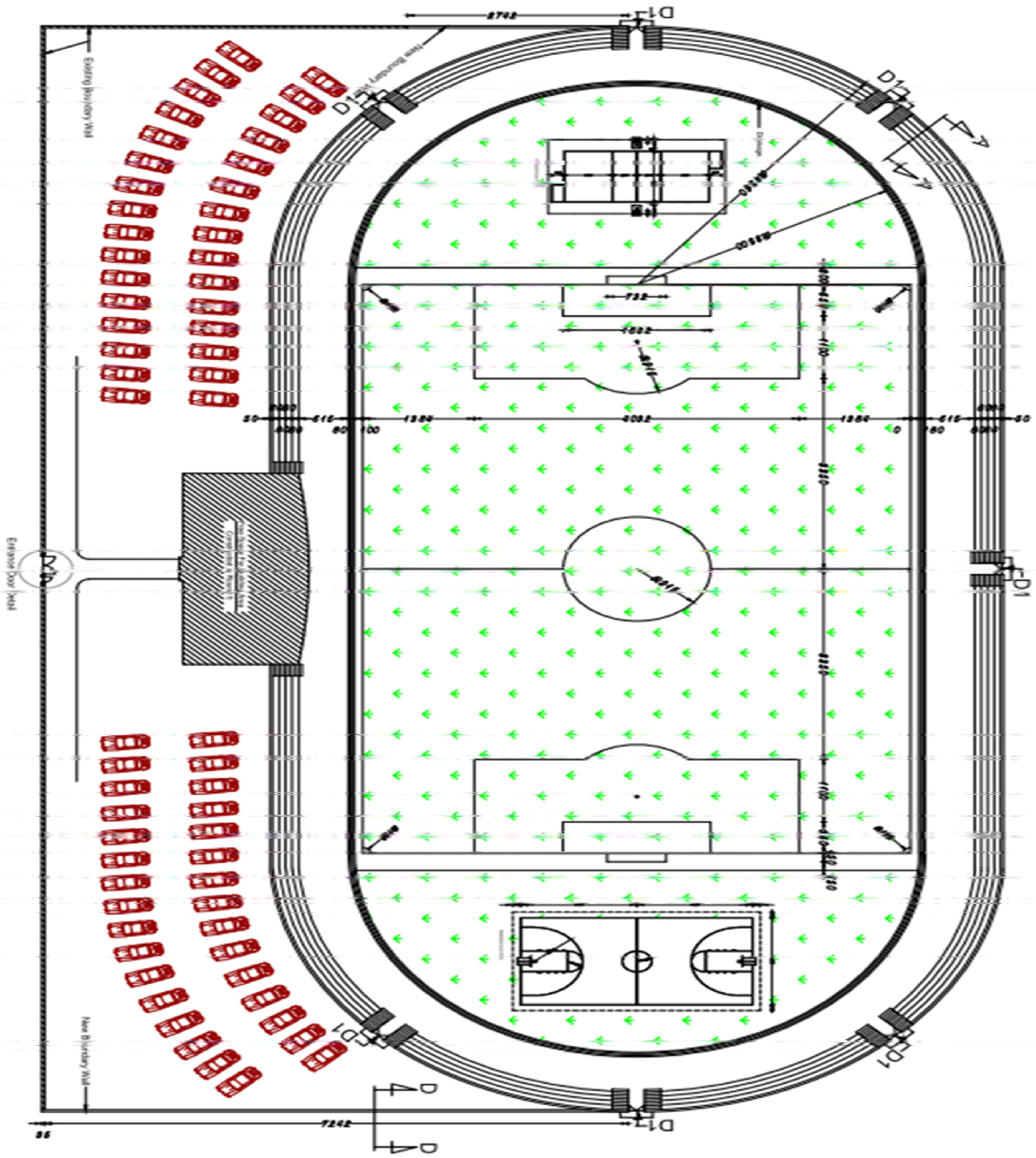

XII. Photos – Pre – Implementation:
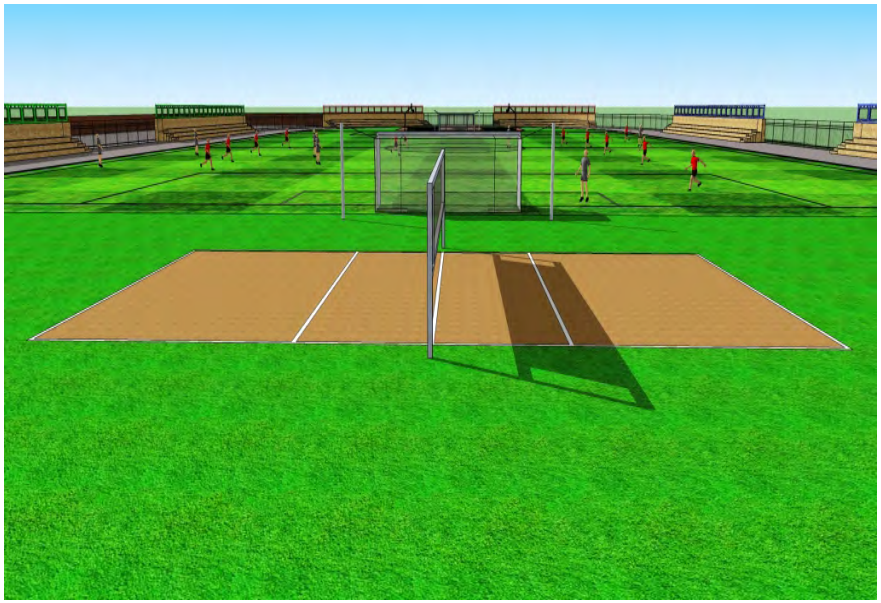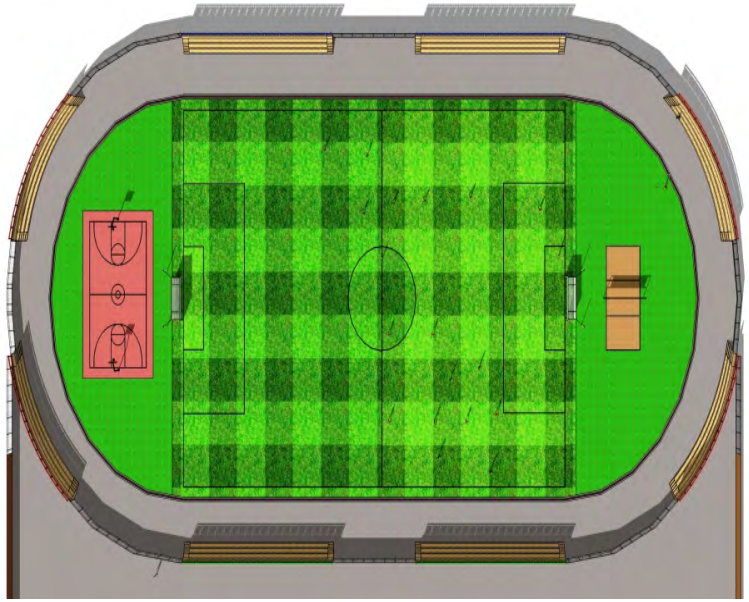
XIII. Conceptual Drawing - Post – Implementation