The Afghanistan Engineering Support Program assembled this deliverable. It is an approved, official USAID document. Budget information contained herein is for illustrative purposes. All policy, personal, financial, and procurement sensitive information has been removed. Additional information on the report can be obtained from Firouz Rooyani, Tetra Tech Sr. VP International Operations, (703) 387-2151.

Site Visit Report	Project: **Bus Terminal Phase #1**
Location: **Aybak District, Samangan Province**	Coordinates: Latitude: **N 36^0 16' 26.78"** Longitude: **E 68° 1' 55.84"**
Inspection Date: **07/11/2013**	Weather: **Partly Cloudy, Temp @ 18°C, No Precipitation**
Inspectors: [redacted]	Status: **Incomplete**

PRESENTED TO

United States Agency for International Development (USAID)
Office of Economic Growth and Infrastructure (OEGI)

RampUP North

Great Massoud Road
Kabul, Afghanistan

PRESENTED BY

Tetra Tech, Inc.
Afghanistan Engineering Support Program
Contract No. EDH-I-00-08-00027-00
Task Order No. 1

Work Order WO-LT-0009 AMD #5

Shash Darak
Kabul, Afghanistan

[redacted] Date: **02/27/14**

EXECUTIVE SUMMARY

The goal of this project is to construct a new Bus Terminal – Phase #1 to be used by the residents of Aybak District. The direct beneficiaries are the entire population of Aybak District. This would include 960 passengers that travel daily to and from neighboring provinces and districts. Indirect beneficiaries would be all people from other districts and provinces who would use the bus terminal.

On November 07, 2013 two (2) engineers from Tetra Tech's (Tt) Afghanistan Engineering Support Program (AESP) traveled to Aybak district in Samangan province to inspect and evaluate the visible completed works. Tt determined USAID's portion of the construction work for the Aybak Bus - Terminal Phase #1 is well underway but still incomplete. The contactor's remaining work consists of installation of fences on top of boundary wall, installation of door and window panels; installation of sinks, taps, water closet, electrical works, construction of septic tank, site drainage, ceramic tiles for the walls and floor of latrine building, installation of 2,000-liter water tank and completion of the roof work of the waiting hall. The Aybak Municipality's portion of the construction work has not been started. The municipality's remaining work consists of the preparation of 500 square meters area for the parking lot and installation of the lighting system for bus terminal and parking lot.

DISCLAIMER
The author's views expressed in this publication do not necessarily reflect the views of the United States Agency for International Development or the United States Government.

TABLE OF CONTENTS

EXECUTIVE SUMMARY ..... i#

1.0 INTRODUCTION ..... 2#

2.0 SITE VISIT ..... 2#

3.0 SITE VISIT DETAILS: USAID RESPONSIBILITY ..... 2#

4.0 SITE VISIT DETAILS: AYBAK MUNICIPALITY RESPONSIBILITY ..... 3#

LIST OF FIGURES

Figure 1. **Sign Board For Bus Terminal Phase#1** 4

Figure 2. **View Of Bus Terminal** 4

Figure 3. **Interior View Of Bus Terminal** 5

Figure 4. **Column Joint With Roof Frame.** 5

Figure 5. **Welded Joint Of Column With Base Plate And Installed Anchor Bolts.** 6

Figure 6. **View Of Roof And Columns For Bus Terminal** 6

Figure 7: **Interior Water Supply PVC Pipes** 7

Figure 8: **PVC Pipes For Water Closet** 7

Figure 9: **Outside View Of Latrines** 8

Figure 10: **Electrical PVC Conduits** 8

Figure 11: **Waiting Hall** 9

Figure 12: **Waiting Hall** 9

Figure 13: **PVC Gutter In Columns** 10

Figure 14: **PVC Ceiling** 10

Figure 15: **Construction Joint Of PCC** ..... 11#

APPENDICES

APPENDIX A – AYB 006 BUS TERMINAL PHASE #1 DRAWING#

APPENDIX B – AYB 006 BUS TERMINAL PHASE #1 BOQ#

APPENDIX C –AYB-006 BUS TERMINAL PHASE #1_PROPOSAL#

This report was prepared for the United States Agency for International Development, Contract No. EDH-I-00-08-00027-00, Task Order 01, Afghanistan Engineering Support Program.

1.0 INTRODUCTION

The Bus Terminal Phase #1 is located in Aybak District, Samangan Province, The USAID's contribution includes construction of boundary wall of 46 meters, placement of Reinforced Cement Concrete (RCC) ring on top of stone masonry wall, fence on the top of boundary wall, two (2) latrine stalls for men and two (2) latrine stalls for women, and two (2) waiting halls. The contribution of the Aybak Municipality consists of site preparation of parking lot with placing of gravel in total area of 500 square meters and installation of area lightening for bus terminal and parking lots.

Aybak Municipality has a population of around 27,000 people, and is located in northern Afghanistan on the highway between Kabul and Mazar. Many people travel through the municipality from and to Mazar, Kabul and other provinces and districts. The Municipality did not have a bus terminal, and travelers stand in open areas during the winter and summer for hours without access to any facilities such as public latrines or seating areas. The municipality did not have a parking lot for buses, which were causing traffic jams and road accidents.

After completion of the construction of this project, Aybak Municipality will encourage the private sector to build two canteens in a public private partnership agreement in the bus terminal according to the project proposal (Appendix C).

The direct beneficiaries are the entire population of Aybak Municipality. This would include 960 passengers that travel daily to and from neighboring provinces and districts through Aybak. Indirect beneficiaries would be all people from other districts and provinces who would use the bus terminal.

2.0 SITE VISIT

Two engineers from Tetra Tech's (Tt) Afghanistan Engineering Support Program (AESP) reviewed the project documentation for Aybak Bus Terminal Phase #1 and traveled to Aybak District, Samangan Province on November 7, 2013 to evaluate the visible completed works. The provided project documents included drawings in **(**Appendix A), BoQ in (Appendix B) and Proposal (Appendix C). Tt engineers were accompanied by DAI site engineer and construction manager during site evaluation. Findings of this site observation are documented in this report, including photos provided in the Figures section pages 4 through 15.

3.0 SITE VISIT DETAILS: USAID RESPONSIBILITY

Regarding the USAID funded portion of works, the following was observed:

1. Site preparation, grading, leveling, and compaction are complete.
2. Installation of columns, roof frame, insulation with Expanded Polystyrene Styrofoam (EPS) boards and Galvanized Iron (GI) sheet are complete. (Figures 1, 2, 3, 4, 5 and 6)
3. Placement of Plain Cement Concrete (PCC) for the floor of bus station is complete. (Figures 3, 6 and 15)
4. Supply and installation of Polyvinyl Chloride (PVC) gutters as per drawing are complete. (Figure 13)
5. Construction of boundary wall is in progress however construction of stone masonry and RCC ring on top of the wall are complete. (Figure 2)
    a. **Remaining work:** The contractor is required to install fences on top of the boundary wall per drawing.
6. Construction of foundation, stone masonry, brick masonry, interior and exterior plastering of latrine buildings are complete. (Figure 9) however the three-coat plastic painting for the interior, exterior wall and ceiling along with all related activities have not been started yet.
    a. **Deficiency:** The orientation of latrines and waiting hall changed from what is indicated in the drawings.
7. Installation of doors and windows for latrines is incomplete. (Figure 9)
    a. **Remaining work:** The contractor is required to install doors and window panels per drawings.

8. Installation of water supply and sewer system piping for latrines are in progress. (Figures 7 and 8)
    a. **Remaining work:** The contractor is required to install the sinks, taps and water closet in latrines.
9. Installation of electrical system for latrines is in progress. (Figure 10)
    a. **Remaining work:** The contractor is required to complete all related electrical works according to the plan.
10. Construction of septic tank, drainage and ceramic tiles for walls and floors of latrines has not been started yet.
    a. **Remaining work:** Installation of septic tank and drainage.
    b. **Remaining work:** Installation of 2,000-liter water tank.
    c. **Remaining work:** Installation of ceramic tiles for the wall and floor of latrine building.
11. Construction of Masonry work for waiting hall and installation of steel columns are complete. (Figures 11 and 12) but the installed columns connection with base plates are not as per design drawings; the columns are welded to the base plates in four corners where the drawings show anchor bolts for column base connections. (Figure 5)
    a. **Remaining Work:** Contractor is required to complete roof work for waiting hall with all related accessories according to the contract documents however the PVC celling are stockpiled at the site. (Figure 14)

Based on the above summary, Tt has determined USAID's portion of the construction work for the Bus Terminal Phase #1 is well underway, but incomplete. The contactor's remaining work consists of installation of fences on top of boundary wall, installation of door and windows panels; installation of the sinks, taps and water closet, electrical works, construction of septic tank, drainage and ceramic tiles for the wall and floor of latrine building and installation of 2000-liter water tank and completion of the roof work of waiting hall.

4.0 SITE VISIT DETAILS: AYBAK MUNICIPALITY RESPONSIBILITY

1. Site preparation of parking lot of 500 square meters has not been started yet.
    a. **Remaining work:** The Aybak Municipality is required to prepare 500 square meters area for the parking lot according to the project proposal.
2. The lighting work for the bus terminal and parking lot has not been begun yet.
    a. **Remaining work:** The Aybak Municipality is required to complete the lighting work according to the plan and project proposal.

Based on the above summary, Tt has determined Aybak Municipality's portion of the construction work for the Aybak Bus Terminal Phase #1 has not been started yet. The contactor's remaining work consists of preparation of 500 square meters area for the parking lot and installation of the lighting system for the bus terminal and parking lot.

FIGURES

Figure 1. Sign Board for Bus Terminal Phase #1

Figure 2. View of Bus Terminal

FIGURES (CONTINUED)

Figure 3. Interior View of Bus Terminal

Figure 4. Column Joint with roof frame.

FIGURES (CONTINUED)

Figure 5. Welded joint of column with base plate and installed anchor bolts.

Figure 6. View of roof and columns for Bus Terminal

FIGURES (CONTINUED

Figure 7: Interior water supply PVC pipes

Figure 8: PVC pipes for water closet

FIGURES (CONTINUED)

Figure 9: Outside View of Latrines

Figure 10: Electrical PVC conduits

FIGURES (CONTINUED)

Figure 11: Waiting Hall

Figure 12: Waiting Hall

FIGURES (CONTINUED)

Figure 13: PVC Gutter in columns

Figure 14: PVC Ceiling

FIGURES (CONTINUED)

Figure 15: Construction joint of PCC

APPENDIX A – AYB 006 BUS TERMINAL PHASE #1 DRAWING

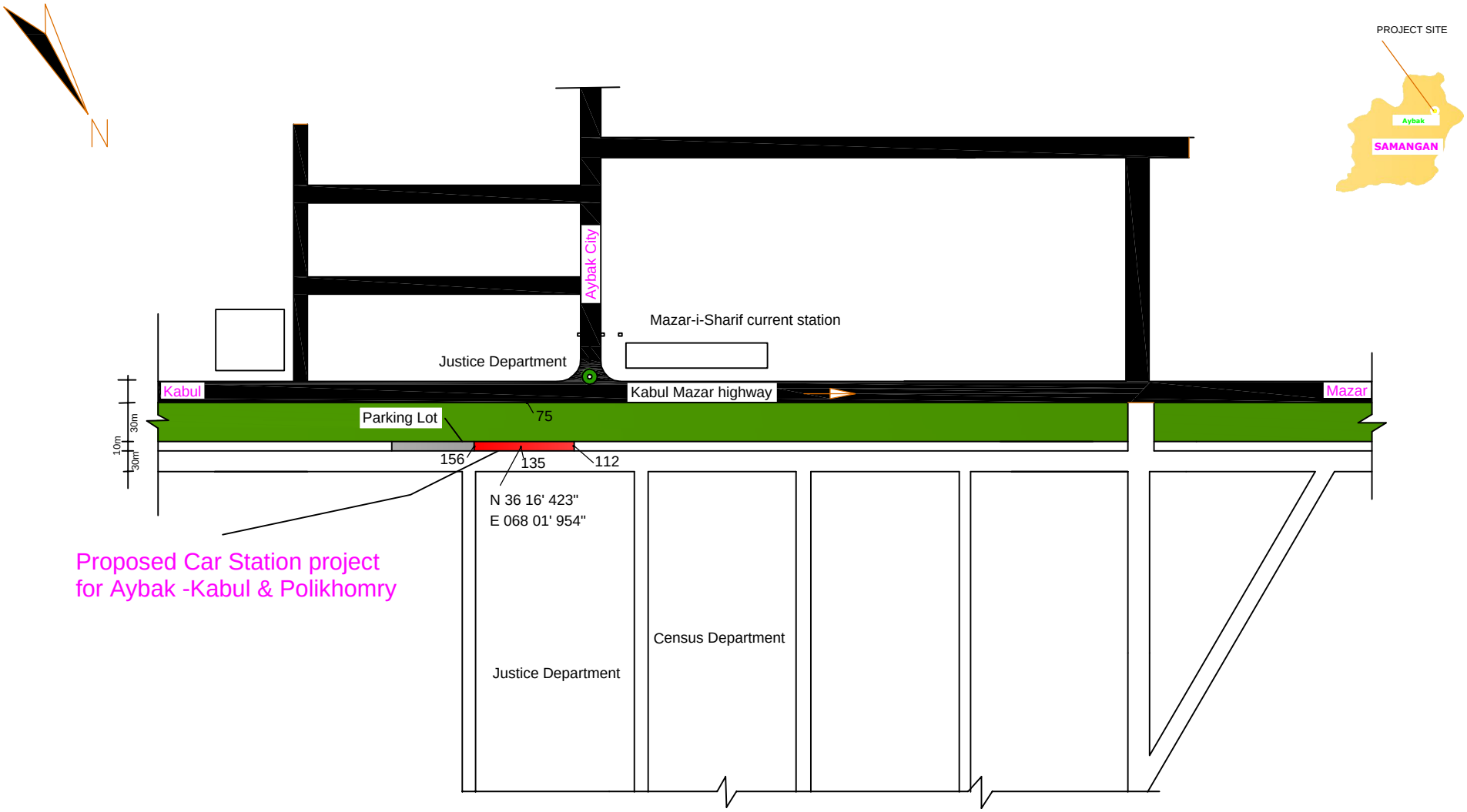

Drawin Title: General Plan		Name	Position/Organization	Project Name: Bus Terminal
	Surveyed By:	[redacted]	RUN Samangan Municipal Engieering Advisor	
	Estimated By:		RUN Samangan Municipal Engieering Advisor	
	Conceptual Approved B		SDAG Deputy	
Drawing Number: 1	Conceptual Approved B		Mayor	
	Checked By:		Engineering Director	Date: May.29.2013
	Approved By:		Project Manager	

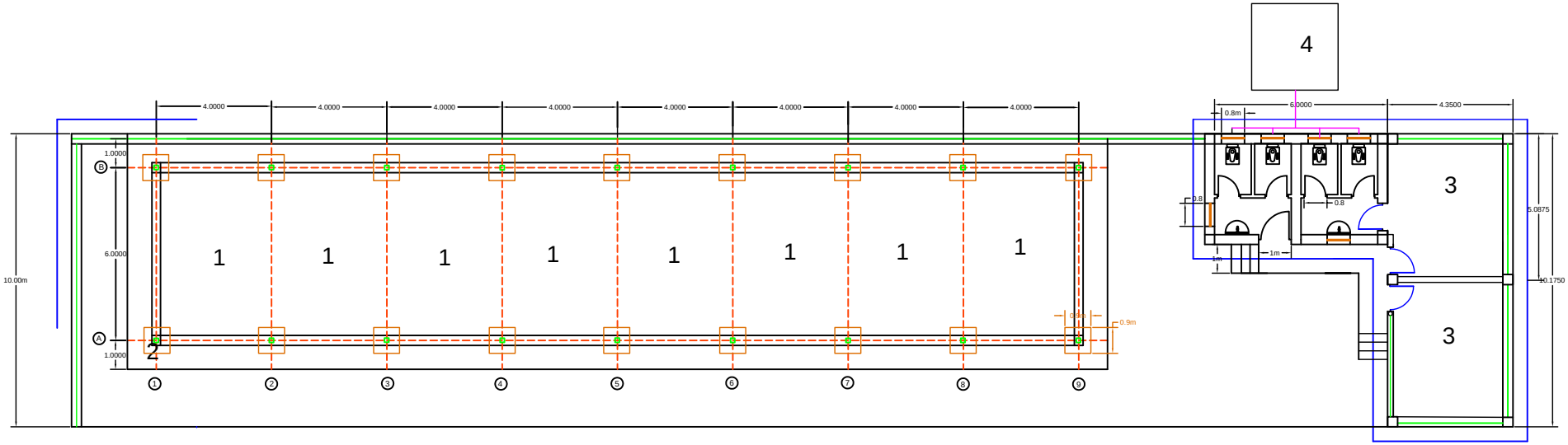

Car Station General Plan

1- Car station
2 Latrine for Man and Woman
3- Waiting hall for man & Woma
3- Septic tank 3*3*5m

Drawin Title: General Plan		Name	Position/Organization	Project Name: Bus Terminal
	Surveyed By:	[redacted]	RUN Samangan Municipal Engieering Advisor	
	Estimated By:	[redacted]	RUN Samangan Municipal Engieering Advisor	
	Conceptual Approved By	[redacted]	Deputy Of SDAG	
Drawing Number: 2	Conceptual Approved By	[redacted]	Mayor	
	Checked By:	[redacted]	Engineering Director	Date: May 29.2013
	Approved By:	[redacted]	Project Manager	

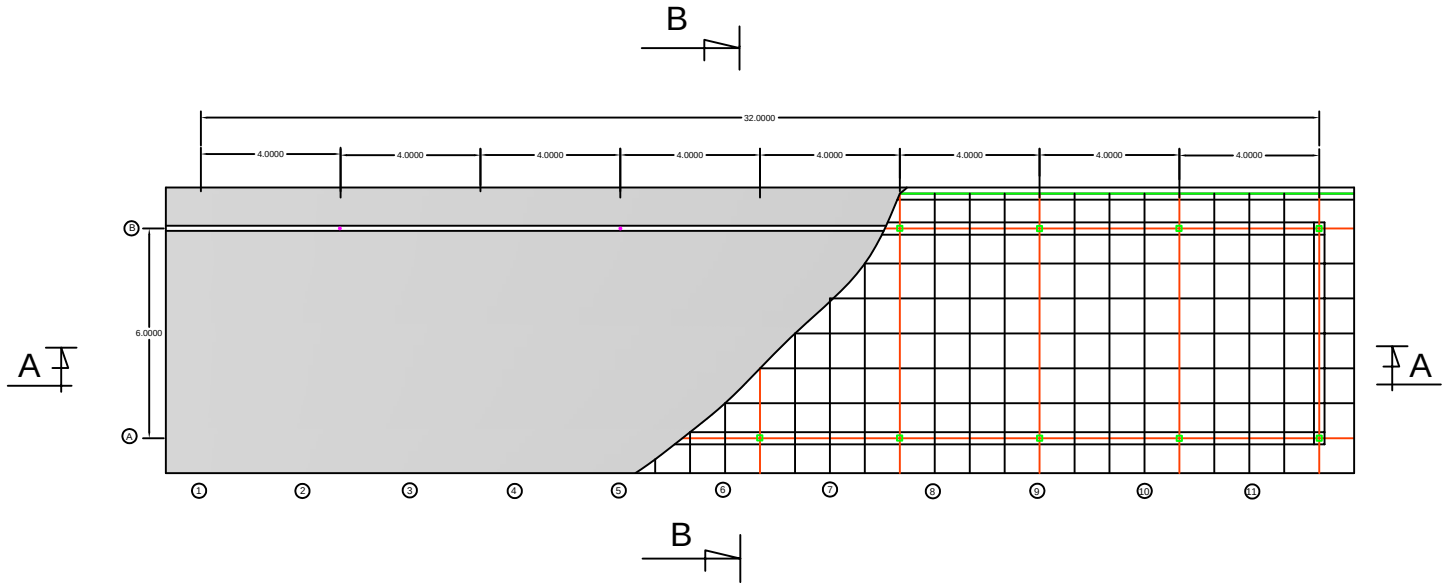

Car Station Roofing Plan

Drawin Title: Roofing Plan		Name	Position/Organization	Project Name: Bus Terminal
	Surveyed By:	[redacted]	RUN Samangan Municipal Engieering Advisor	
	Estimated By:		RUN Samangan Municipal Engieering Advisor	
	Conceptual Approved By		Deputy SDAG	
Drawing Number: 3	Conceptual Approved By		Mayor	
	Checked By:		Engineering Director	Date: May 29.2013
	Approved By:		Project Manager	

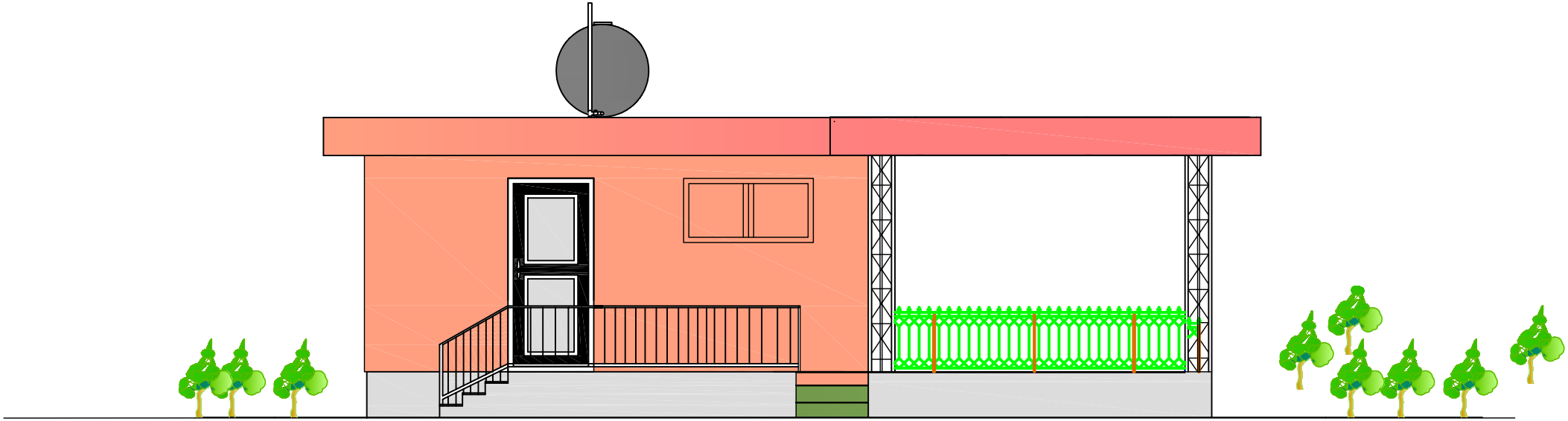

View of latrine and waiting room

Drawin Title: View of building		Name	Position/Organization	Project Name:
	Surveyed By:	[redacted]	RUN Samangan Municipal Engieering Advisor	
	Estimated By:		RUN Samangan Municipal Engieering Advisor	
	Conceptual Approved B		Deputy SDAG	Bus Terminal
Drawing Number: 4	Conceptual Approved B		Mayor	
	Checked By:		Engineering Director	Date: May 29.2013
	Approved By:		Project Manager	

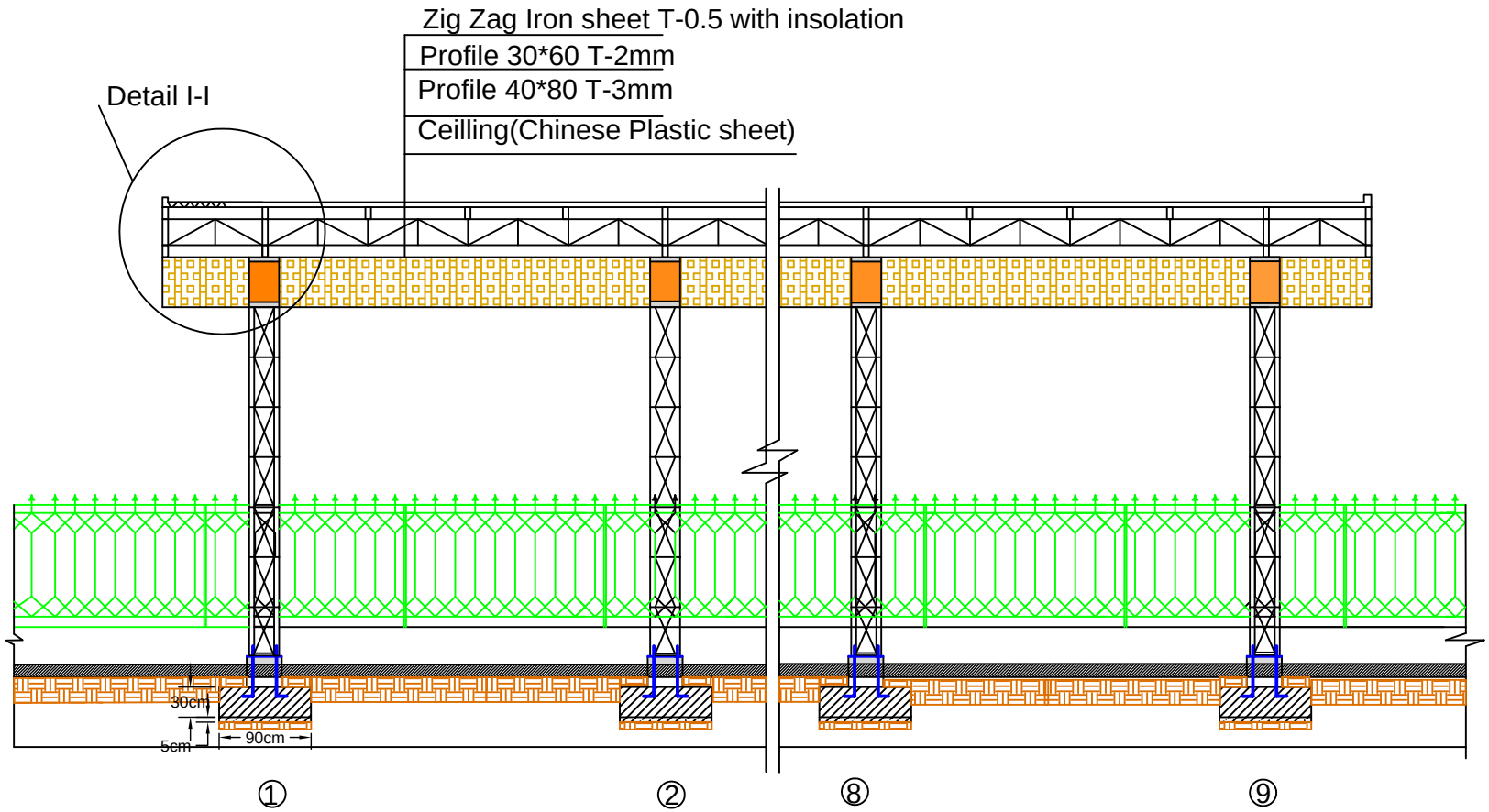

Note: Depth of all foundation belongs to site soil.

Drawin Title:		Name	Position/Organization	Project Name:
Section A-A	Surveyed By:	[redacted]	RUN Samangan Municipal Engieering Advisor	Bus Terminal
	Estimated By:		RUN Samangan Municipal Engieering Advisor	
	Conceptual Approved By		SDAG Deputy	
Drawing Number: 5	Conceptual Approved By		Mayor	
	Checked By:		Engineering Director	Date: May.29.2013
	Approved By:		Project Manager	

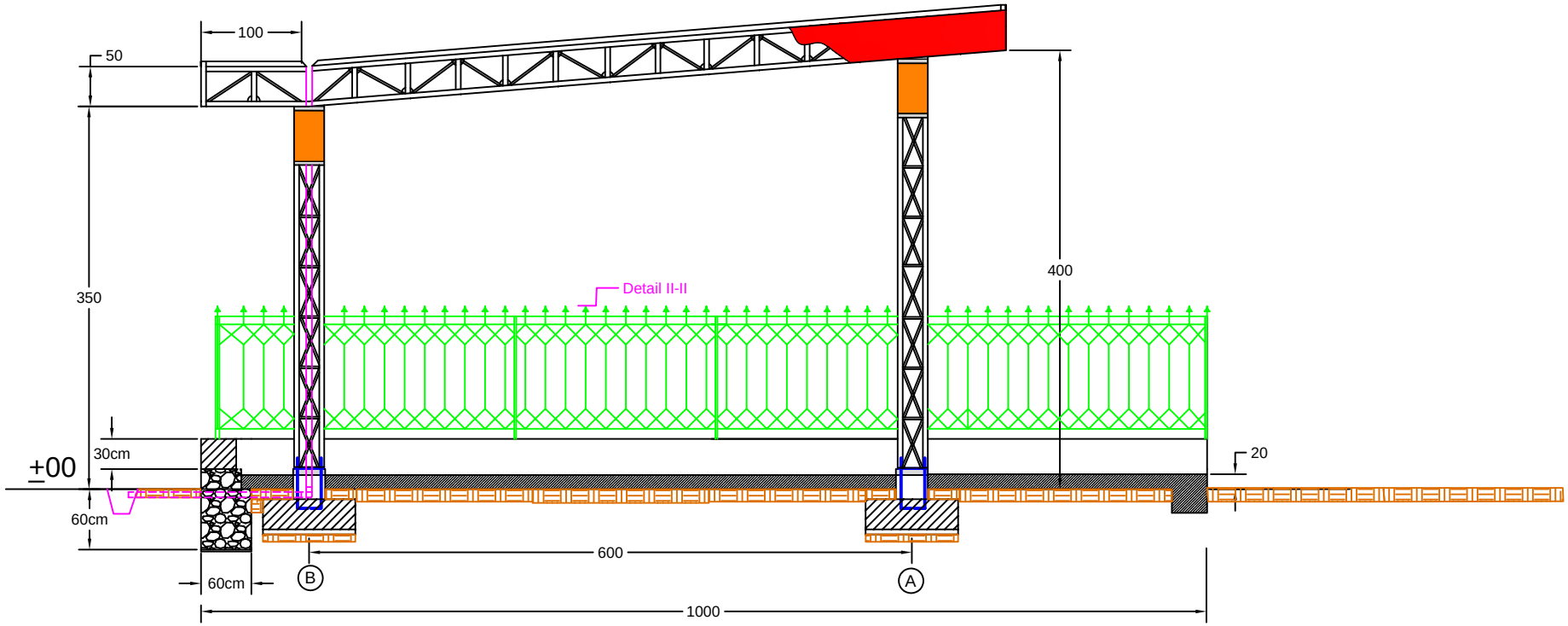

Note: Depth of all foundation belongs to site soil.

Drawin Title:		Name	Position/Organization	Project Name:
Section B-B	Surveyed By:	[redacted]	RUN Samangan Municipal Engieering Advisor	Bus Terminal
	Estimated By:		RUN Samangan Municipal Engieering Advisor	
	Conceptual Approved By		SDAG Deputy	
Drawing Number: 6	Conceptual Approved By		Mayor	
	Checked By:		Engineering Director	Date: May.29.2013
	Approved By:		Project Manager	

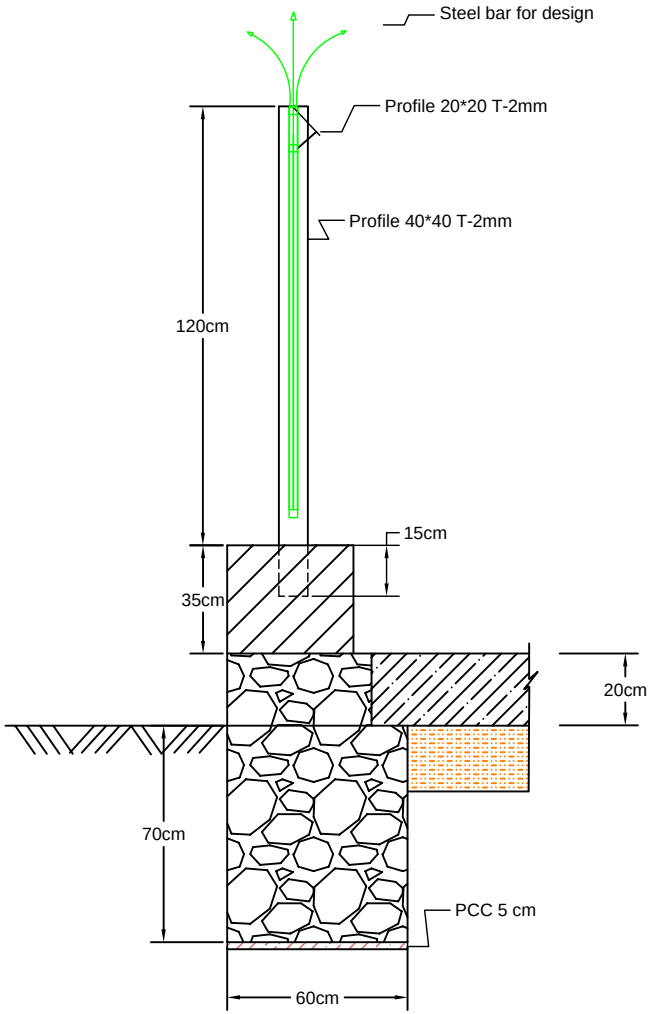

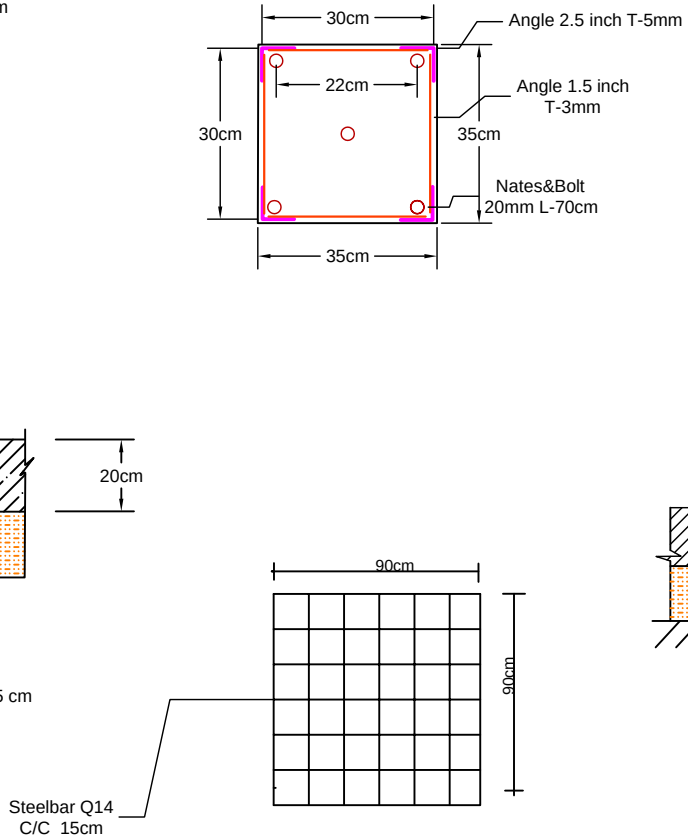

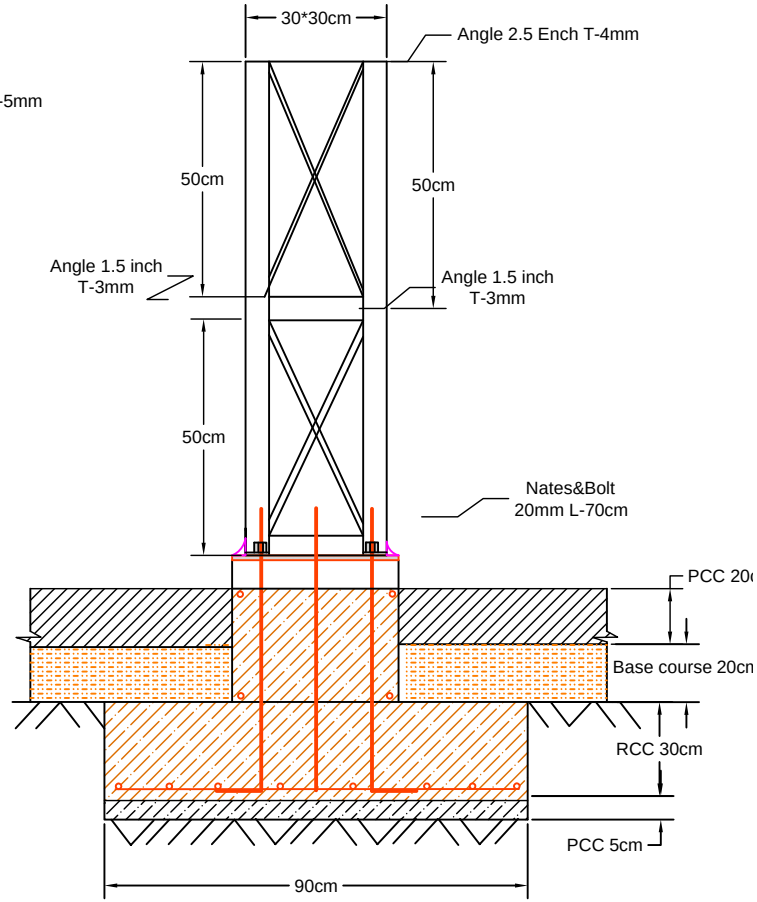

Note: Depth of all foundation belongs to site soil.

Drawin Title:		Name	Position/Organization	Project Name:
Details	Surveyed By:	[redacted]	RUN Samangan Municipal Engieering Advisor	Bus Terminal
	Estimated By:		RUN Samangan Municipal Engieering Advisor	
	Conceptual Approved By		SDAG Deputy	
Drawing Number: 7	Conceptual Approved B		Mayor	
	Checked By:		Engineering Director	Date: May.29.2013
	Approved By:		Project Manager	

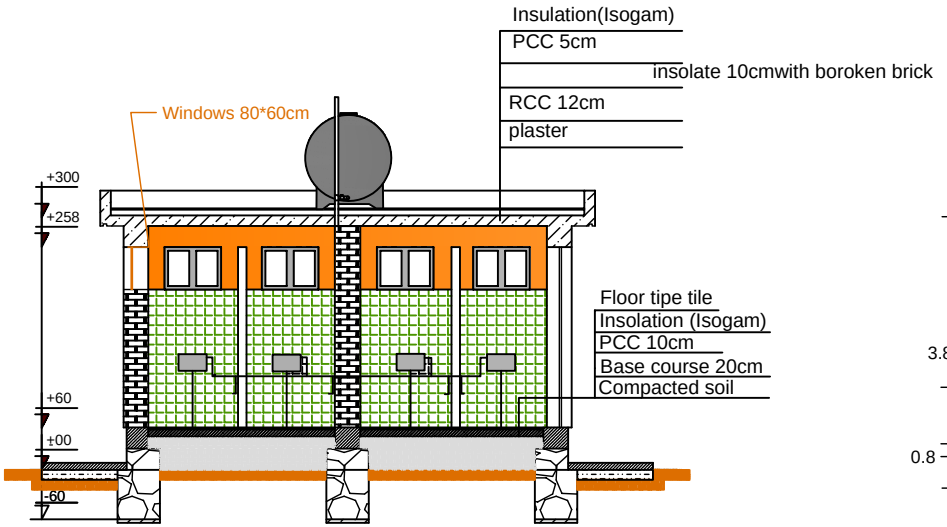

Section of B-B

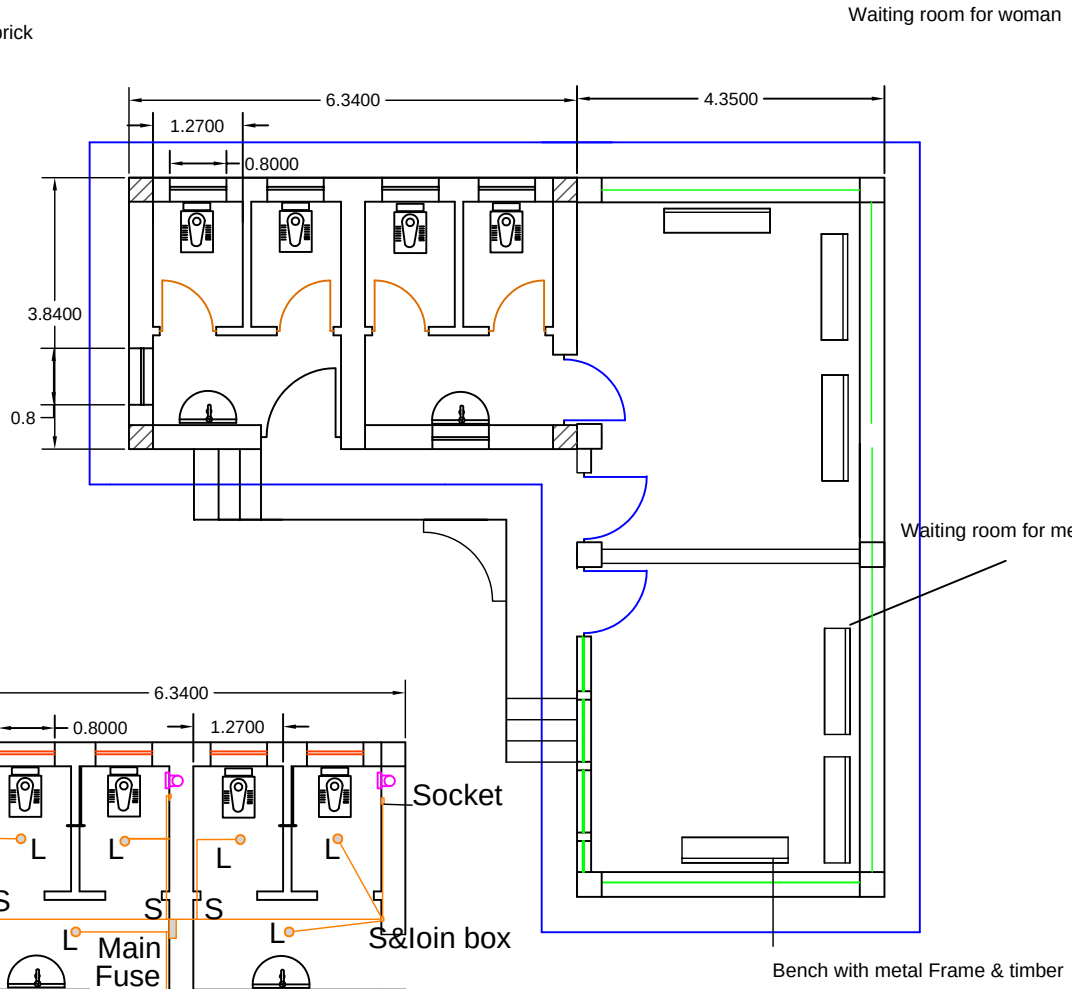

Plan of Floor

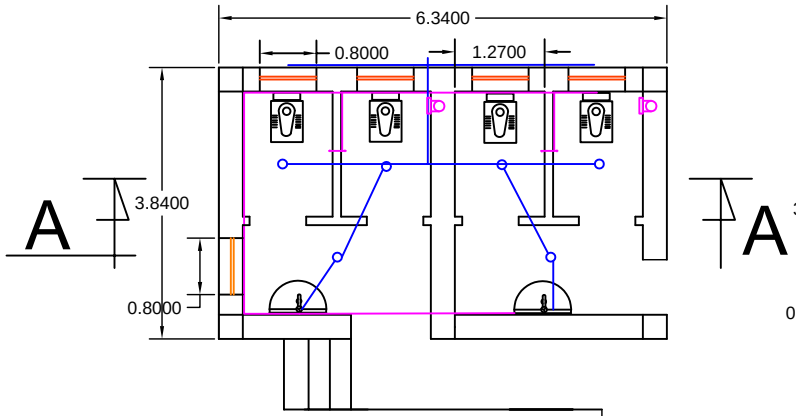

Water supply & Sewer system scheme

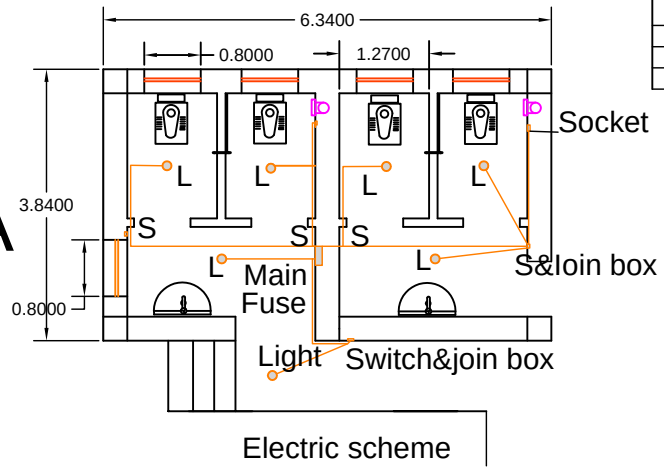

Electric scheme

Drawin Title:		Name	Position/Organization	Project Name:
Plan & Section	Surveyed By:	[redacted]	RUN Samangan Municipal Engieering Advisor	Bus Terminal
	Estimated By:		RUN Samangan Municipal Engieering Advisor	
	Conceptual Approved By		SDAG Deputy	
Drawing Number: 8	Conceptual Approved By		Mayor	
	Checked By:		Engineering Director	Date: May.29.2013
	Approved By:		Project Manager	

Cross section Iron Bending A-A

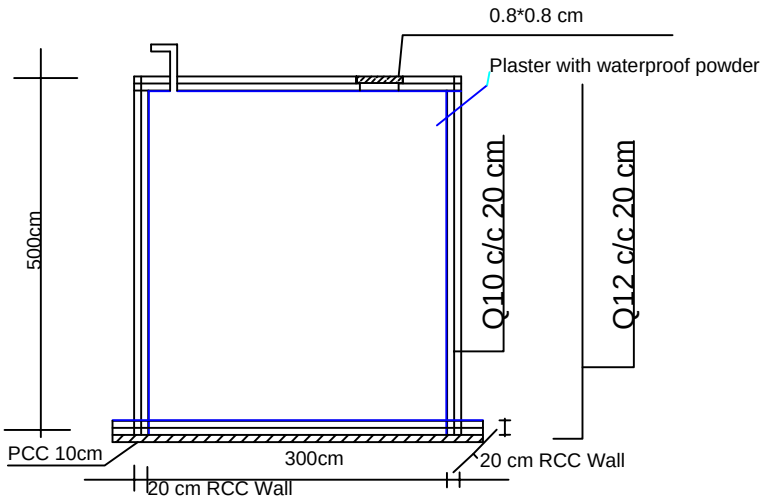

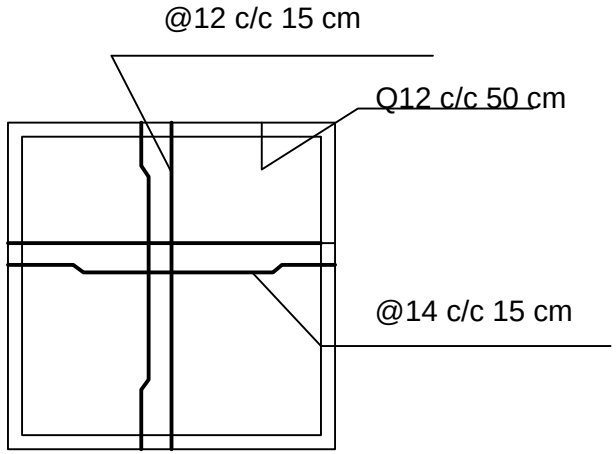

Top Floor of Septic Tank

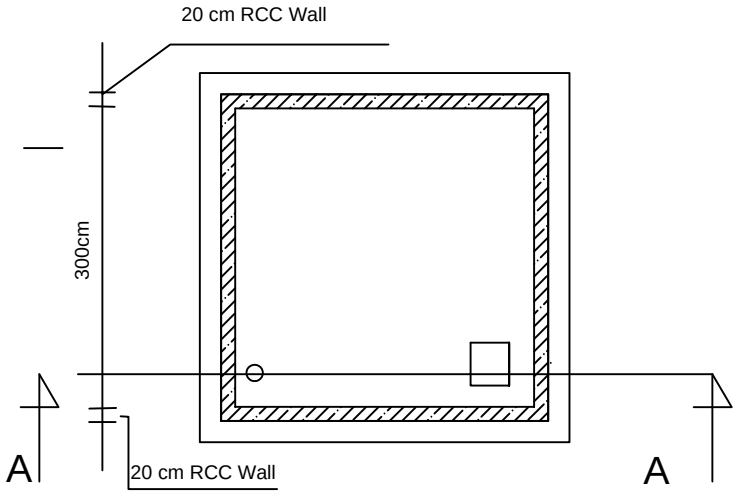

Foundation Plan

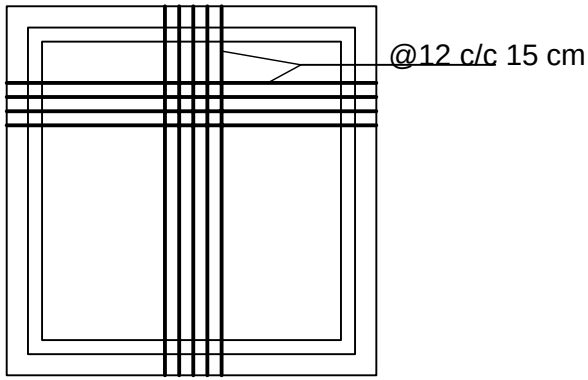

Bottom Floor of Septic Tank

Drawin Title: Septic tank		Name	Position/Organization	Project Name: Bus Terminal
	Surveyed By:	[redacted]	RUN Samangan Municipal Engieering Advisor	
	Estimated By:		RUN Samangan Municipal Engieering Advisor	
	Conceptual Approved By		SDAG Deputy	
Drawing Number: 9	Conceptual Approved By		Mayor	
	Checked By:		Engineering Director	Date: May.29.2013
	Approved By:		Project Manager	

Section C-C waiting hall

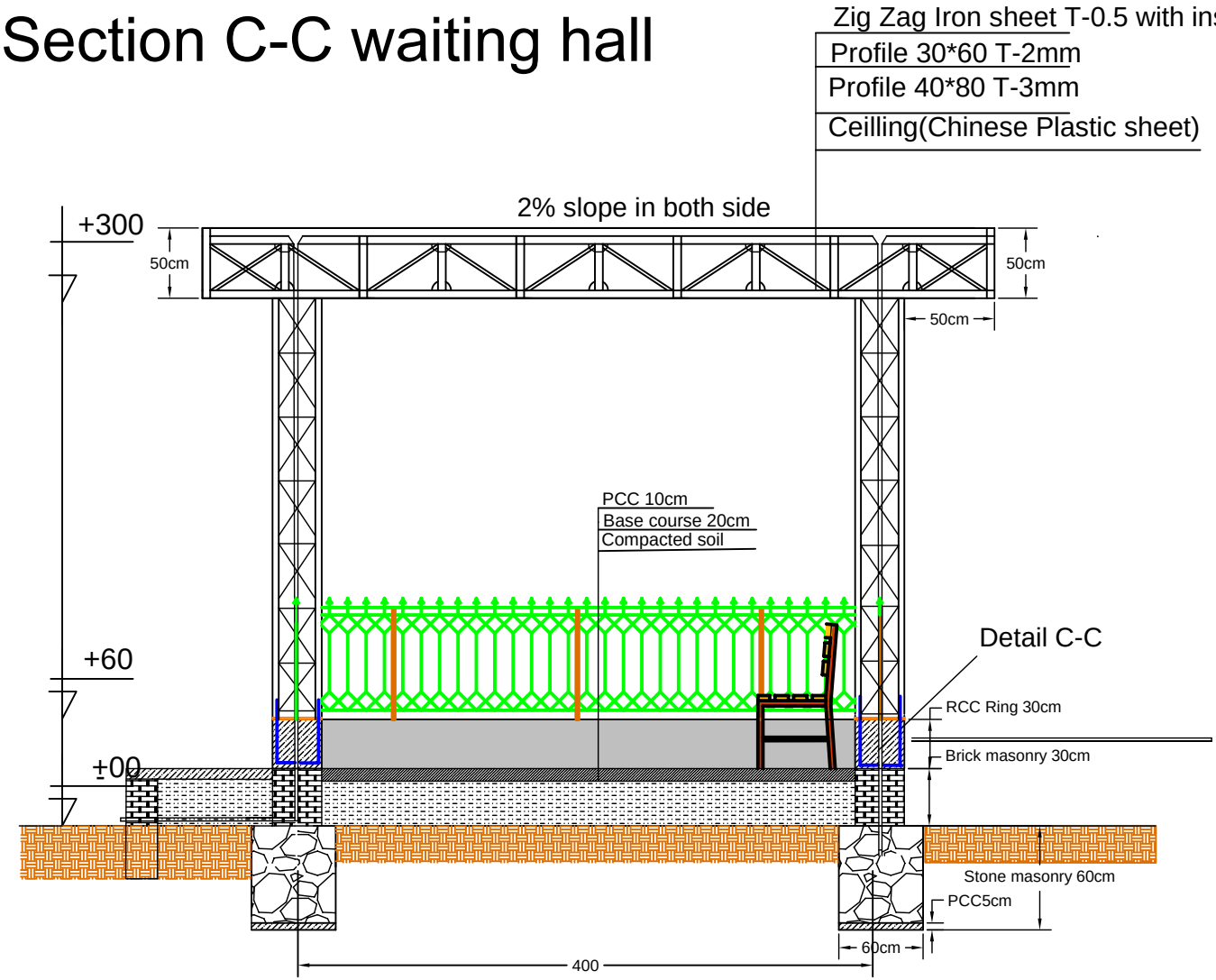

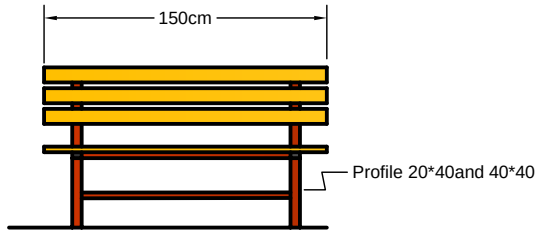

Bench with metal Frame & timber

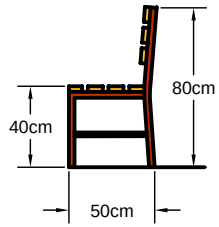

Drawin Title:		Name	Position/Organization	Project Name:
Section of waiting Hall	Surveyed By:	Eng Ghulam Nabi	RUN Samangan Municipal Engieering Advisor	
	Estimated By:	Eng Ghulam Nabi	RUN Samangan Municipal Engieering Advisor	
	Conceptual Approved By	Zia Gol Nasry	SDAG Deputy	Bus Terminal
Drawing Number: 11	Conceptual Approved By	Mohammad Aidar Khorramy	Mayor	
	Checked By:	Eng Ghulam Sakhi Akhger	Engineering Director	Date: May.29.2013
	Approved By:	Colin Coyle	Project Manager	

Detail I-I

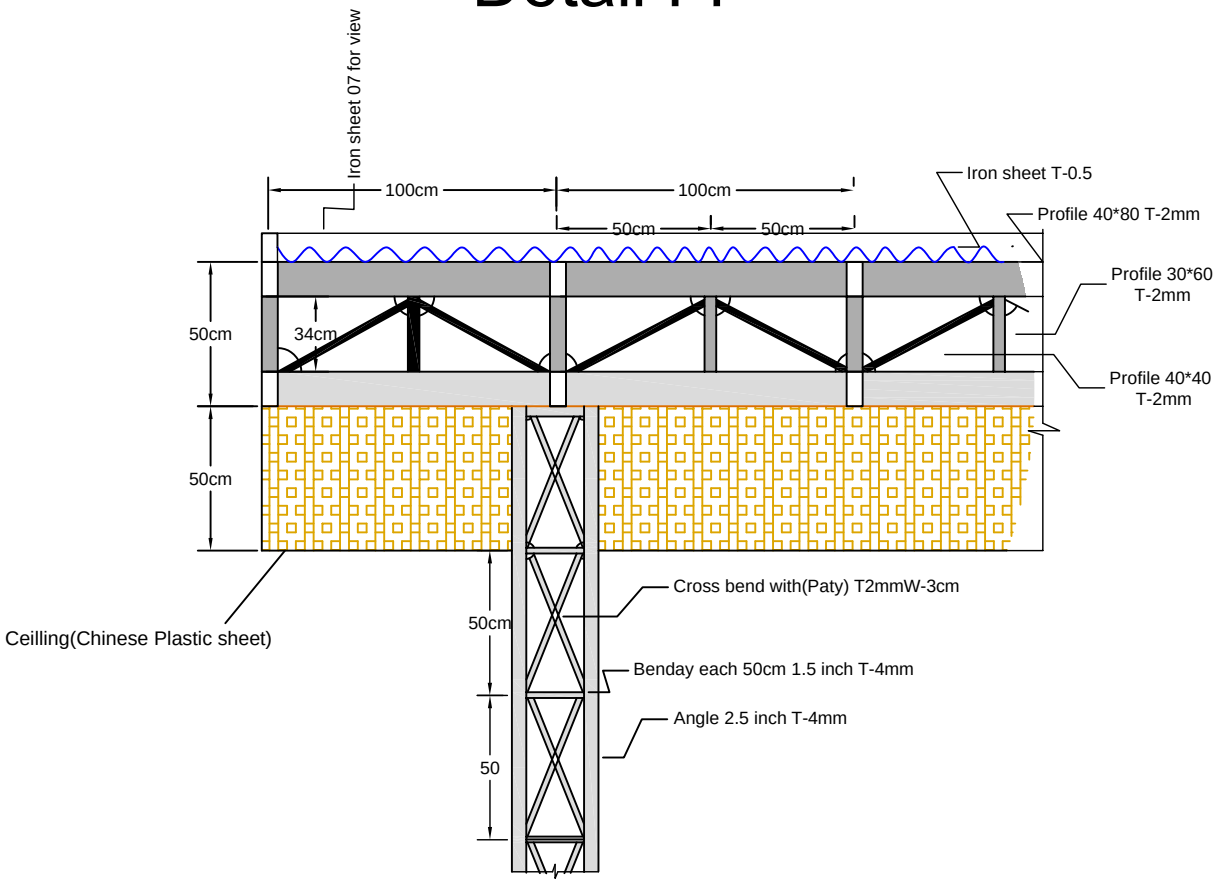

Drawin Title:		Name	Position/Organization	Project Name:
Detail of Terminal Roof	Surveyed By:	[redacted]	RUN Samangan Municipal Engieering Advisor	Bus Terminal
	Estimated By:		RUN Samangan Municipal Engieering Advisor	
	Conceptual Approved By		SDAG Deputy	
Drawing Number: 12	Conceptual Approved By		Mayor	
	Checked By:		Engineering Director	Date: May.29.2013
	Approved By:		Project Manager	

Detail II-II(boundary fence)

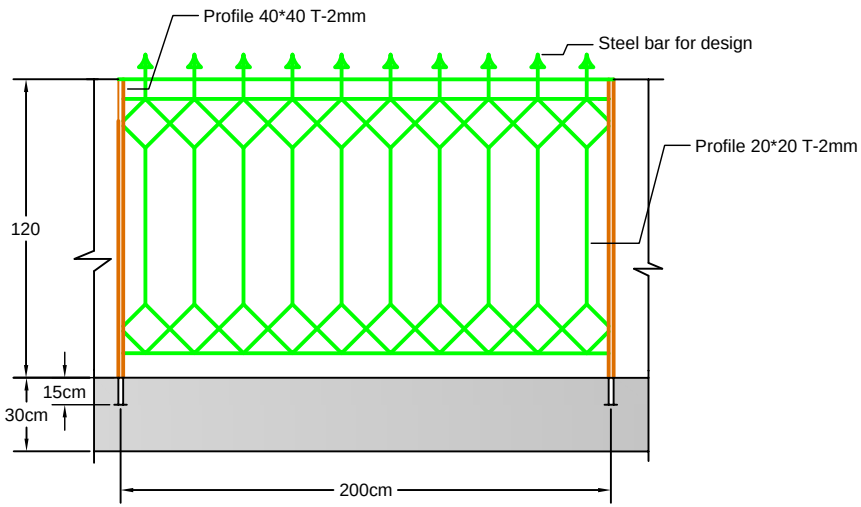

		Name	Position/Organization	
Drawin Title: Detail of boundary wall fence	Surveyed By:	[redacted]	RUN Samangan Municipal Engieering Advisor	**Project Name:** Bus Terminal
	Estimated By:		RUN Samangan Municipal Engieering Advisor	
	Conceptual Approved By		SDAG Deputy	
Drawing Number: 13	Conceptual Approved By		Mayor	
	Checked By:		Engineering Director	Date: May.29.2013
	Approved By:		Project Manager	

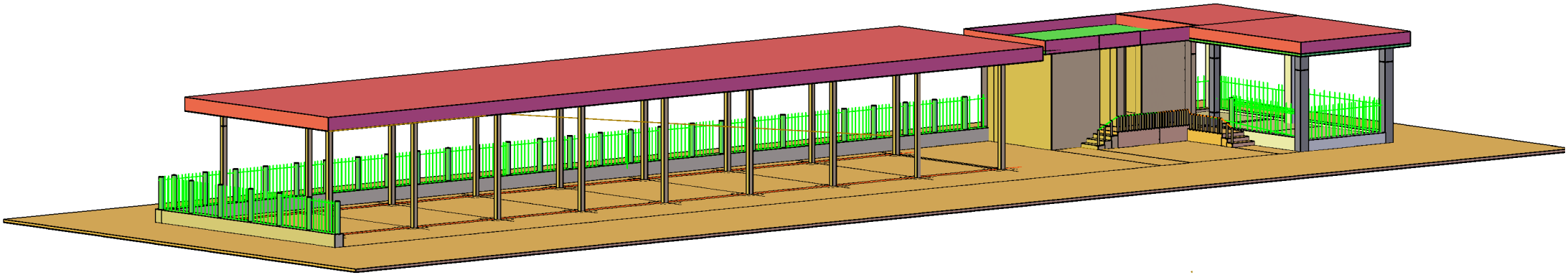

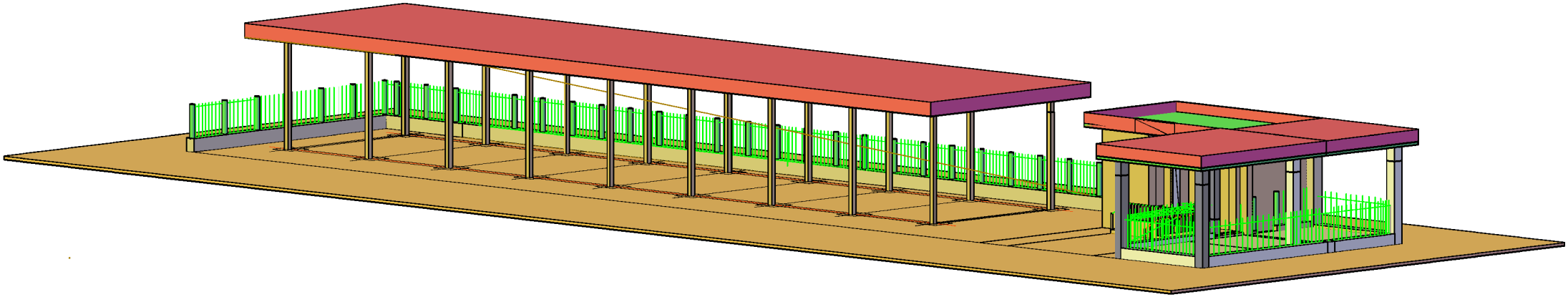

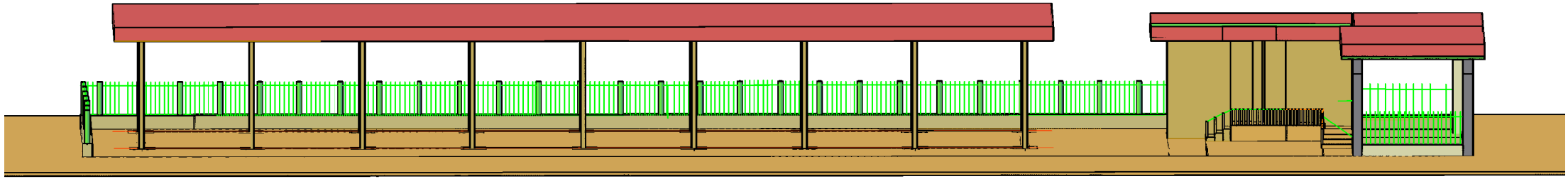

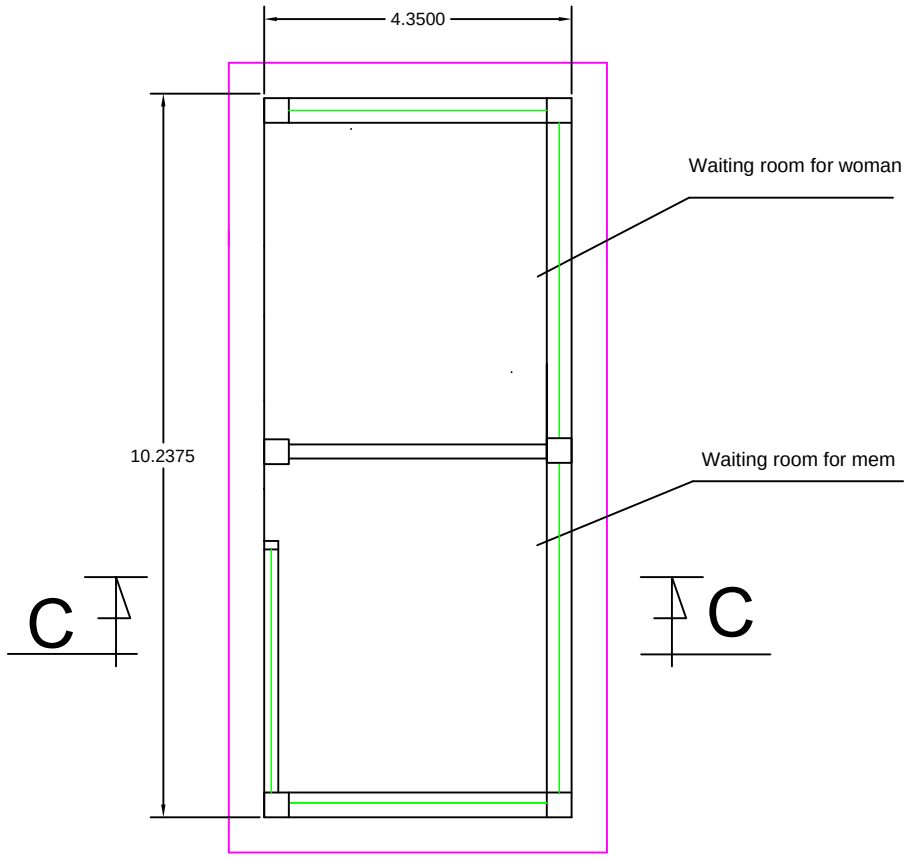

Waiting room floor plan

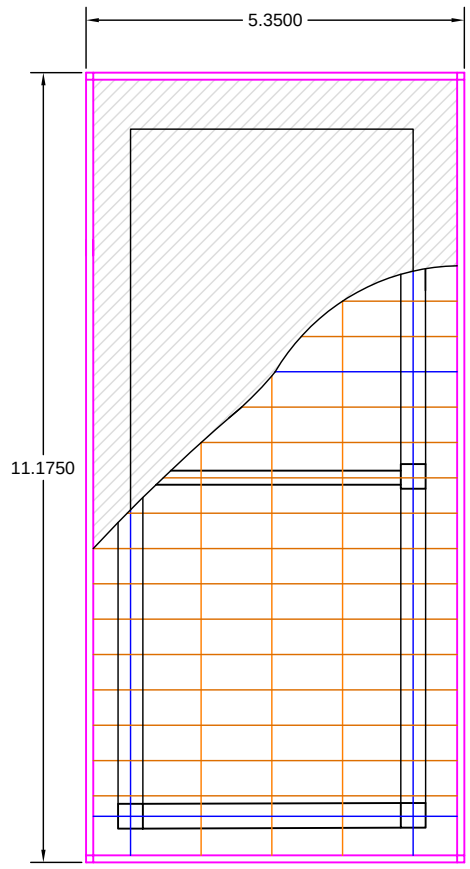

Waiting room roof plan

		Name	Position/Organization	
Drawin Title: Waiting room Plan	Surveyed By:	[redacted]	RUN Samangan Municipal Engieering Advisor	Project Name: Bus Terminal
	Estimated By:		RUN Samangan Municipal Engieering Advisor	
	Conceptual Approved By		SDAG Deputy	
Drawing Number: 10	Conceptual Approved By		Mayor	
	Checked By:		Engineering Director	Date: May.29.2013
	Approved By:		Project Manager	

APPENDIX B –AYB-006 BUS TERMINAL PHASE #1_BOQ

RAMP-UP-NORTH
Construction of Car Terminal
Bill of Quantities

Project Name: Construction of Bus Terminal (Aybak to Pul-e-Khumri) Date: May/29/2013

NO	Description	No.	Length (M)	Width (M)	Depth (M)	Quantity	Unit	Unit Price (AFA)	Total Cost (AFA)	Remarks
A1	Site Preparation: Filling maximum height 70 cm with common soil, leveling, cleaning, and watering as pre site needs including compaction layer by layer each 20 cm.	1.00	50.00	10.00	0.70	350.00	cum		AFA -	
A2	Laying base course material on bus terminal general area with 20cm thickness and compaction (with 10T machine) and watering according technical specification (50 % well graded crashed aggregate, 30% sand and 20% suitable soil including transportation and all required activities)	1.00	50.00	10.00	0.20	100.00	cum		AFA -	
B	**Terminal: 272m²with all required activities.**									
1	Construction metal columns with RCC footing, activities and detail of material include: (excavation of foundations, Plain Cement Concrete(PCC M-150) for footing of columns, Reinforcement Cement Concrete (RCC) M-200 for footing and ring of the column, Iron Angle 2.5 inch T-5mm weight-27kg/ 6m for column (Russian), Iron Angle for bending 1.5 inch T-3mm weight-13kg/6m for column in each 50 cm (Russian), iron Paty for vertical bending T-2mm wide 3cm, Iron sheet 35*35 T-10mm with five hole for bottom of the column, and provide Nate and bolt Dia 20mm (5 pcs in each column Long -70cm) based on the design and specification with all required activities such a anticorrosion, need to be 100 % welded and oil painting of the entire metal works.	18.00				18.00	Each		AFA -	
2	Construction of roof and the activities are include: (Profile 40*80 T-2mm for beams of the ceiling over the columns, profile 30*60 T-2mm for bending of beams after 50 cm of the ceiling, profile 40*40 T-2mm for beams cross bending of the ceiling, corrugate white iron sheet 0.5 best quality for top of the roof, Iron sheet 07 for vertical view, Chinese ceiling best quality and tree coat anticorrosion, oil painting for entire metallic works and all joint should be welded 100%.	1.00	34.00	8.00		272.00	M^2		AFA -	
3	Plain Cement Concrete (PCC) M-150 cement ratio 1:2:4 T-20cm for floor of Bus terminal.	1.00	42.00	10.00	0.20	84.00	M^3		AFA -	
4	Supply and installation gutters as per drawing and from PE pipe 5 inch with all related activities.	4.00				4.00	Ls		AFA -	
c	**Boundary Wall:**									
1	Excavation of foundations with all related activities according to the drawing.	1.00	46.00	0.60	0.70	19.32	cum		AFA -	
2	Stone masonry with mortar 1:4 and pointing M1:3 with all required acitivities (mountain stone from Samangan).	1.00	46.00	0.60	1.30	35.88	cum		AFA -	
3	Plain Cement Concrete (PCC) M-150 cement ratio 1:2:4 under the stone masonry wall with all required activities.	1.00	46.00	0.60	0.10	2.76	cum		AFA -	
4	Fence for boundary wall over the RCC ring with profile 20*20 for fence , profile 40*40 for column after each 2m and decoration arrow from steel bar on the top according to the design and drawing.	1.00	74.00	1.20	0.00	88.80	m2		AFA -	
5	Oil Painting for fence of boundary wall.	1.00	74.00	1.20	1.20	88.80	m2		AFA -	

RAMP-UP-NORTH
Construction of Car Terminal
Bill of Quantities

Project Name: Construction of Bus Terminal (Aybak to Pul-e-Khumri) Date: May/29/2013

NO	Description	No.	Length (M)	Width (M)	Depth (M)	Quantity	Unit	Unit Price (AFA)	Total Cost (AFA)	Remarks
6	Reinforcement Cement Concrete (RCC) M-200 for ring of the boundary wall according to specification and drawing.	1.00	46.00	0.35	0.30	4.83	cum		AFA -	
F	**Latrine :**									
1	Excavation of foundations with all related activities according to the drawing.	1.00	26.00	0.60	0.70	10.92	cum		AFA -	
2	Plain Cement Concrete (PCC) M-150 cement ratio 1:2:4 for foundation.	1.00	26.00	0.60	0.05	0.78	cum		AFA -	
3	Stone masonry with pointing work for the foundation with quarry stone mortar 1:4 with all related activities.	1.00	26.00	0.60	0.70	10.92	cum		AFA -	
4	Reinforcement Cement Concrete (RCC) M-200 for ring of over the stone masonry and under slab of roof, Reinforcement Cement Concrete (RCC) M:200 for rings, beams and slab with shuttering and steel bars best quality, cement 375kg per m3 clean coarse sand and crushed gravel<32mm mixing the aggregate ,placing and forming works ,curing as least for 14-18 days or in cold climates at least 28 days and Reinforcement Cement Concrete (RCC) M:200 for Parapet with all required activities and specification according to the design and drawing.	1.00				10.09	cum		AFA -	
5	Brick masonry walls, the work covered by this item shall consist of supply and laying burnt brick on the top of the ring . Bricks shall comply with requirement of first class brick . The burnt bricks masonry shall be done by 1:4 ration of cement mortar.	1.00	21.00	0.35	2.70	19.85	cum		AFA -	
6	Insulation with broken brick or(ash of coal) T- 10cm with required slope.	1.00	6.34	3.80	0.10	2.41	cum		AFA -	
7	Supply and installation of floor type tile T-10mm and wall type tile T-9mm installed with 1:3 cement sand ratio and all required activities and drawing technical specification.	1.00				50.00	sqm		AFA -	
8	Supply and installation of flat water closet complete set (Kamood) highest quality ,with all related activities and technical specifications.	4.00				4.00	Each		AFA -	
9	Supply and installation of water tap good quality with it's all related activities and all related specification.	4.00				4.00	Each		AFA -	
10	Supply and installation of Aluminum frames doors and windows complete with glass and all related activities.	1.00				16.50	sqm		AFA -	
11	Plastering of the interior and exterior wall and ceiling with M-1:4 smoothly and all related activities.	1.00				120.00	sqm		AFA -	
12	Three coats of plastic painting for the interior ,exterior wall and ceiling along with all related activities.	1.00				120.00	sqm		AFA -	
13	Supply and installation of interior electrical system for the proposed building (different size conduits, wires, cable, join box, switches ,sockets, grounding ventilators, fuse ,fuse box lights and installing connections to the main electrical source, along with all other items needed to complete the electrical system according to design and drawing.	1.00				1.00	Ls		AFA -	

RAMP-UP-NORTH
Construction of Car Terminal
Bill of Quantities

Project Name: Construction of Bus Terminal (Aybak to Pul-e-Khumri) Date: May/29/2013

NO	Description	No.	Length (M)	Width (M)	Depth (M)	Quantity	Unit	Unit Price (AFA)	Total Cost (AFA)	Remarks
14	Supply and installation interior water supply and sewer system including installing a connection between the building water systems the sewer system and septic tanks (all pipes and fitting for the sewer system should be class D best quality and also including a sand bed caution taps with insulation of all pipes) along with all related activities and technical specification.	1.00				1.00	Ls		AFA -	
15	Construction of RCC septic tank with (3*3*5)m3 volume and 20cm walls thickness RCC M:200 plastering with waterproof according to the design and drawing .	1.00				1.00	Ls		AFA -	
16	Supply and installation of Ventilator.	1.00				2.00	Each		AFA -	
17	Supply and installation of Isogam on the top of roof best quality.	1.00	10.70	4.40	1.00	35.00	sqm		AFA -	
18	Supply and installation of sink and mirror complete set (Destshoy) good quality for toilet with it's all related activities and technical specification.	2.00				2.00	Each		AFA -	
19	Supply and installation of overhead water tank (2000 liter capacity and steel sheet T-2mm) on the roof of latrine ,PE pipe 2 inch for poles insulation , piping works , overflow ,valve , wash pipe with all required activities.	1.00				1.00	Ls		AFA -	
G	**Waiting Hall**									
1	Excavation of foundations with all related activities according to the drawing.	1.00	32.50	0.60	0.70	13.65	cum		AFA -	
2	Plain Cement Concrete (PCC) M-150 cement ratio 1:2:4 for foundation.	1.00	32.50	0.60	0.05	0.98	cum		AFA -	
3	Plain Cement Concrete (PCC) M-150 cement ratio 1:2:4 for floor.	1.00	9.40	3.80	0.10	3.57	cum		AFA -	
4	Stone masonry work for the foundation with quarry stone mortar 1:4 with all related activities.	1.00	32.50	0.60	0.70	13.65	cum		AFA -	
5	Brick masonry walls, the work covered by this item shall consist of supply and laying burnt brick on the top of the ring . Bricks shall comply with requirement of first class brick . The burnt bricks masonry shall be done by 1:4 ration of cement mortar.	1.00	32.30	0.35	0.80	9.04	cum		AFA -	
6	Reinforcement Cement Concrete (RCC) M-200 for ring of over the stone masonry .	1.00	32.30	0.35	0.30	3.39	cum		AFA -	
7	Reinforcement Cement Concrete (RCC) M-200 for footing of columns .	6.00	0.90	0.90	0.60	0.49	cum		AFA -	
8	Supply and installation of column with all related activities and specification according to design and drawing.	6.00				6.00	Each		AFA -	
9	Supply and installation of construction roofing frame and ceiling with all related activities and technical specification according to the design and drawing.	1.00				62.50	sqm		AFA -	
10	Supply and installation gutters as per drawing and from PE pipe 5 inch with all related activities.	4.00				4.00	Each		AFA -	
11	Supply and installation of Benches according to the drawing and specification.	6.00				6.00	Each		AFA -	
	Total Amount in AFA								[redacted]	

APPENDIX C –AYB-006 BUS TERMINAL PHASE #1_PROPOSAL

Regional Afghan Municipalities Program for Urban Populations

(RAMP UP-North)

Regional Command North

Proposed Scope of Work Document

Province: Samangan

Municipality: Aybak

Project Number: RUN-P-AYB-006

Project Name: Bus Terminal Construction

Project Duration: 3 months

Estimated Project Cost: [redacted]

Date: July 06, 2013

MGRS Coordinates of Project Area: 42SUF8285762104

GPS Coordinates:

Latitude: N36 41,843

Longitude: E 67 41,319

I. Problem statement:

Aybak Municipality has a population of around 27,000 people (13,500 men and 13,500 women), and is located in northern Afghanistan on the highway between Kabul and Mazar. Many people travel through the municipality from and to Mazar, Kabul and other provinces and districts. The Municipality currently does not have a bus terminal, and travelers are forced to stand in open areas during both winter and summer for hours without access to any facilities such as public latrines or seating areas. The municipality also does not have a parking lot for buses, which causes traffic jams and road accidents.

II. Solution statement:

On February 5, 2013, a joint meeting of the Service Delivery Advisory Group (SDAG) and Public Administration Advisory Group (PAAG) (24 participants, including 4 women and 12 men from the SDAG and 9 men from the PAAG) was held to identify the Round 5 project. The participants prioritized and selected construction of two bus terminals in the Southeast (Kabul direction) and North (Mazar direction) entrances to the Aybak Municipality. *The concept included construction of two bus terminals however it was decided by the municipality and SDAG to construct only one that would service the route Aybak to Pul-e-Khumri/Kabul. If required the municipality at some stage in the future could build a second terminal servicing the Aybak to Mazar route.*

During a Regional Workshop on Project Management for Public Works conducted by RAMP UP-North, the Aybak Municipal Construction Manager with a SDAG representative drafted the project concept along with the Service Delivery Improvement Plan (SDIP), Monitoring Plan, Operations and Maintenance Plan (O&M Plan) and Communication Plan for the Construction of the Bus Terminals Project.

The Mayor anticipates establishing a public-private partnership agreement for the operation of the bus terminals to ensure their sustainability after the improvements made by the project.

After the completion of the construction for this project, the Aybak Municipality will encourage the private sector to install two canteens in a public private partnership agreement in the bus terminal.

III. Beneficiaries:

The direct beneficiaries are the entire population of Aybak Municipality, an estimated 27,000 people (13,500 men and 13,500 women). This would include 960 passengers that travel daily to and from neighboring provinces and districts through the Aybak Municipality. Indirect beneficiaries would be all people from other districts and provinces who would use the bus terminal.

IV. Scope of Work:

A. Methodology

The proposed project requires construction work, which will be subcontracted to a private company. The subcontractor will be selected through a transparent procurement process and will complete the required activities under the supervision of the municipality and RAMP UP-North.

B. Goods and Services Provided by RAMP UP-North for one terminal:

- Site preparation (Cutting and Filling H= 0.5 m depth) and compaction of 500m2 including leveling and watering,
- Supply and installation of bus terminal roof 272m2,
- Construction of boundary wall 46m length with RCC ring and fence over the ring 60m2,
- Construction of four cabin latrine, with two cabins for men and two cabins for women,
- Construction of a waiting hall for men and women 40m2 (13.65m3 stone masonry and installation of 25m2 metallic fence).

C. Goods and Services Contributed by Municipality (Estimated Value of $[redacted]

- Site Preparation: (cutting, filling, leveling) of parking lot 500m2,
- Lightening for the bus terminal and parking lot,
- Graveling of parking lot.

Municipal Contribution									
1	Site Preparation: (cutting, filling, leveling) of parking lot.	1.00	10.00	50.00	1.00	500.00	Sqm	50.00	[redacted]
2	Lightening of Bus Terminal and parking lot.	1.00					LS		[redacted]
3	Graveling of the parking lot	1.00	10.00	50.00	0.20	100.00	cum	400.00	[redacted]
Estimated Value of Goods and Services Contributed by Municipality									[redacted]

All subcontractors for RAMP UP-North activities are required to hire local laborers for all unskilled labor positions. These laborers will be hired from within the community. The subcontractor shall be responsible for providing documentation of the number of both skilled and unskilled laborers and number of days worked.

Cost Estimation for Goods and Services Provided by RAMP UP North

Bill of Quantities

NO	Description	No.	Length (M)	Width (M)	Depth (M)	Quantity	Unit	Unit Price (AFA)	Total Cost (AFA)	Remarks
A1	Site Preparation: Filling maximum height 70 cm with common soil, leveling, cleaning, and watering as pre site needs including compaction layer by layer each 20 cm.	1.00	50.00	10.00	0.70	350.00	cum		AFA -	
A2	Laying base course material on bus terminal general area with 20cm thickness and compaction (with 10T machine) and watering according technical specification (50 % well graded crashed aggregate, 30% sand and 20% suitable soil including transportation and all required activities)	1.00	50.00	10.00	0.20	100.00	cum		AFA -	
B	**Terminal: 272m²with all required activities.**									
1	Construction metal columns with RCC footing, activities and detail of material include: (excavation of foundations, Plain Cement Concrete(PCC M-150) for footing of columns, Reinforcement Cement Concrete (RCC) M-200 for footing and ring of the column, Iron Angle 2.5 inch T-5mm weight-27kg/ 6m for column (Russian), Iron Angle for bending 1.5 inch T-3mm weight-13kg/6m for column in each 50 cm (Russian), iron Paty for vertical bending T-2mm wide 3cm, Iron sheet 35*35 T-10mm with five hole for bottom of the column, and provide Nate and bolt Dia 20mm (5 pcs in each column Long -70cm) based on the design and specification with all required activities such a anticorrosion, need to be 100 % welded and oil painting of the entire metal works.	18.00				18.00	Each		AFA -	
2	Construction of roof and the activities are include: (Profile 40*80 T-2mm for beams of the ceiling over the columns, profile 30*60 T-2mm for bending of beams after 50 cm of the ceiling, profile 40*40 T-2mm for beams cross bending of the ceiling, corrugate white iron sheet 0.5 best quality for top of the roof, Iron sheet 07 for vertical view, Chinese ceiling best quality and tree coat anticorrosion, oil painting for entire metallic works and all joint should be welded 100%.	1.00	34.00	8.00		272.00	M^2		AFA -	
3	Plain Cement Concrete (PCC) M-150 cement ratio 1:2:4 T-20cm for floor of Bus terminal.	1.00	42.00	10.00	0.20	84.00	M^3		AFA -	
4	Supply and installation gutters as per drawing and from PE pipe 5 inch with all related activities.	4.00				4.00	Ls		AFA -	
c	**Boundary Wall:**									
1	Excavation of foundations with all related activities according to the drawing.	1.00	46.00	0.60	0.70	19.32	cum		AFA -	

2	Stone masonry with mortar 1:4 and pointing M1:3 with all required activities (mountain stone from Samangan).	1.00	46.00	0.60	1.30	35.88	cum		AFA -	
3	Plain Cement Concrete (PCC) M-150 cement ratio 1:2:4 under the stone masonry wall with all required activities.	1.00	46.00	0.60	0.10	2.76	cum		AFA -	
4	Fence for boundary wall over the RCC ring with profile 20*20 for fence , profile 40*40 for column after each 2m and decoration arrow from steel bar on the top according to the design and drawing.	1.00	74.00	1.20	0.00	88.80	m2		AFA -	
5	Oil Painting for fence of boundary wall.	1.00	74.00	1.20	1.20	88.80	m2		AFA -	
6	Reinforcement Cement Concrete (RCC) M-200 for ring of the boundary wall according to specification and drawing.	1.00	46.00	0.35	0.30	4.83	cum		AFA -	
F	**Latrine :**									
1	Excavation of foundations with all related activities according to the drawing.	1.00	26.00	0.60	0.70	10.92	cum		AFA -	
2	Plain Cement Concrete (PCC) M-150 cement ratio 1:2:4 for foundation.	1.00	26.00	0.60	0.05	0.78	cum		AFA -	
3	Stone masonry with pointing work for the foundation with quarry stone mortar 1:4 with all related activities.	1.00	26.00	0.60	0.70	10.92	cum		AFA -	
4	Reinforcement Cement Concrete (RCC) M-200 for ring of over the stone masonry and under slab of roof, Reinforcement Cement Concrete (RCC) M:200 for rings, beams and slab with shuttering and steel bars best quality, cement 375kg per m3 clean coarse sand and crushed gravel<32mm mixing the aggregate ,placing and forming works ,curing as least for 14-18 days or in cold climates at least 28 days and Reinforcement Cement Concrete (RCC) M:200 for Parapet with all required activities and specification according to the design and drawing.	1.00				10.09	cum		AFA -	
5	Brick masonry walls, the work covered by this item shall consist of supply and laying burnt brick on the top of the ring . Bricks shall comply with requirement of first class brick . The burnt bricks masonry shall be done by 1:4 ration of cement mortar.	1.00	21.00	0.35	2.00	14.70	cum		AFA -	
6	Insulation with broken brick or (ash of coal) T- 10cm with required slope.	1.00	6.34	3.80	0.10	2.41	cum		AFA -	
7	Supply and installation of floor type tile T-10mm and wall type tile T-9mm installed with 1:3 cement sand ratio and all required activities and drawing technical specification.	1.00				50.00	sqm		AFA -	
8	Supply and installation of flat water closet complete set (Kamood) highest quality, with all related activities and technical specifications.	4.00				4.00	Each		AFA -	
9	Supply and installation of water tap good quality with it's all related activities and all related specification.	4.00				4.00	Each		AFA -	
10	Supply and installation of Aluminum frames doors and windows complete with glass and all related activities.	1.00				16.50	sqm		AFA -	

11	Plastering of the interior and exterior wall and ceiling with M-1:4 smoothly and all related activities.	1.00				120.00	sqm		AFA -	
12	Three coats of plastic painting for the interior, exterior wall and ceiling along with all related activities.	1.00				120.00	sqm		AFA -	
13	Supply and installation of interior electrical system for the proposed building (different size conduits, wires, cable, join box, switches ,sockets, grounding ventilators, fuse ,fuse box lights and installing connections to the main electrical source, along with all other items needed to complete the electrical system according to design and drawing.	1.00				1.00	Ls		AFA -	
14	Supply and installation interior water supply and sewer system including installing a connection between the building water systems the sewer system and septic tanks (all pipes and fitting for the sewer system should be class D best quality and also including a sand bed caution taps with insulation of all pipes) along with all related activities and technical specification.	1.00				1.00	Ls		AFA -	
15	Construction of RCC septic tank with (3*3*5) m3 volume and 20cm walls thickness RCC M:200 plastering with waterproof according to the design and drawing .	1.00				1.00	Ls		AFA -	
16	Supply and installation of Ventilator.	1.00				2.00	Each		AFA -	
17	Supply and installation of Isogam on the top of roof best quality.	1.00	10.70	4.40	1.00	35.00	sqm		AFA -	
18	Supply and installation of sink and mirror complete set (Destshoy) good quality for toilet with it's all related activities and technical specification.	2.00				2.00	Each		AFA -	
19	Supply and installation of overhead water tank (2000 liter capacity and steel sheet T-2mm) on the roof of latrine ,PE pipe 2 inch for poles insulation , piping works , overflow ,valve , wash pipe with all required activities.	1.00				1.00	Ls		AFA -	
G	**Waiting Hall**									
1	Excavation of foundations with all related activities according to the drawing.	1.00	32.50	0.60	0.70	13.65	cum		AFA -	
2	Plain Cement Concrete (PCC) M-150 cement ratio 1:2:4 for foundation.	1.00	32.50	0.60	0.05	0.98	cum		AFA -	
3	Plain Cement Concrete (PCC) M-150 cement ratio 1:2:4 for floor.	1.00	9.40	3.80	0.10	3.57	cum		AFA -	
4	Stone masonry work for the foundation with quarry stone mortar 1:4 with all related activities.	1.00	32.50	0.60	0.70	13.65	cum		AFA -	
5	Brick masonry walls, the work covered by this item shall consist of supply and laying burnt brick on the top of the ring . Bricks shall comply with requirement of first class brick . The burnt bricks masonry shall be done by 1:4 ration of cement mortar.	1.00	32.30	0.35	0.80	9.04	cum		AFA -	
6	Reinforcement Cement Concrete (RCC) M-200 for ring of over the stone masonry.	1.00	32.30	0.35	0.30	3.39	cum		AFA -	
7	Reinforcement Cement Concrete (RCC) M-200 for footing of	6.00	0.90	0.90	0.60	0.49	cum		AFA -	

	columns.									
8	Supply and installation of column with all related activities and specification according to design and drawing.	6.00				6.00	Each		AFA -	
9	Supply and installation of construction roofing frame and ceiling with all related activities and technical specification according to the design and drawing.	1.00				62.50	sqm		AFA -	
10	Supply and installation gutters as per drawing and from PE pipe 5 inch with all related activities.	4.00				4.00	Each		AFA -	
11	Supply and installation of Benches according to the drawing and specification.	6.00				6.00	Each		AFA -	
G	**Branding, opening + closing ceremony**					1.00	Ls		AFA -	
Estimated Cost of Goods and Services Provided by RAMP UP-North:									[redacted]	[redacted]

V. Involvement and Leadership of Municipal Staff in Project Selection, Development, Implementation, and Monitoring & Evaluation:

Municipal officials, including the Mayor, Deputy Mayor and the Municipal Engineer, were involved during the process of selecting and developing the project.

On February 5, 2013, a joint meeting of the Service Delivery Advisory Group (SDAG) and Public Administration Advisory Group (PAAG) (24 participants, including 4 women and 12 men from the SDAG and 9 men from the PAAG) was held to identify the Round 5 project. The participants prioritized and selected the construction of two bus terminals in the Southeast (Kabul direction) and North (Mazar direction) entrances of the Aybak Municipality.

On February 10, 2013, municipal officials and the RAMP UP-North team conducted a site feasibility check and survey, to define the final scope of work and estimation. The RAMP UP-North team along with the Municipal Engineering Department developed the estimation for the project, including the design and engineering documents.

As part of the development of the project proposal, the Mayor and the Municipal Engineer have committed to lead the monitoring, evaluation, and oversight of this project, along with the Service Delivery Advisory Group's monitoring committee with the RAMP UP-North team.

VI. Level of Public Participation:

As noted above, on February 5, 2013, a joint meeting of the Service Delivery Advisory Group (SDAG) and Public Administration Advisory Group (PAAG) (24 participants, including 4 women and 12 men from the SDAG and 9 men from the PAAG) was held to identify the Round 5 project. The participants prioritized and selected the construction of a bus terminal servicing Aybak to Pul-e-Khumri/Kabul route.

Following the above meeting, SDAG members were invited to a Regional Workshop on Project Management for Public Works conducted by RAMP UP North. The Aybak Construction Manager, together with SDAG members, drafted the project concept along with the Service Delivery Improvement Plan (SDIP), Monitoring Plan, Operations and Maintenance Plan (O&M Plan) and Communication Plan for the construction of the Bus Terminal Project.

The SDAG will continue to play an active role during project implementation by monitoring the Bus Terminal Project and also the operation, revenue collection and management of the Bus Terminal Project after project completion.

VII. Activity Objectives:

- Improving relationships between the mayor, municipal officials and citizens.
- Improving citizen participation in decision-making processes related to planning, design, implementation and monitoring of municipal services.
- Improving service delivery in transportation sector.
- Increase revenues and maintain municipal services through public-private partnerships for sustainably operating a bus terminal.
- Improved public sanitation and a cleaner environment for passengers who use the bus terminal.
- Reduce congestion and traffic accidents.

VIII. Sustainability and Maintenance:

Municipality and Citizen Contribution (After Project Completion):

Aybak Municipality and SDAG members will monitor the cleaning the bus terminal, and will also disseminate information on civic education and public outreach for sanitary behavior for project beneficiaries.

After the completion of the improvements of the project, the Aybak Municipality will set up 2 trash bins in the bus terminal.

Revenue Enhancement:

It is anticipated that by constructing the bus terminal, municipal revenue will increase from the following main sources:

- Through the lease of the bus terminal operations to the private sector;
- Through renting of the two canteens in the bus terminals;
- Through leasing the latrines in the bus terminals to the private sector;

Overall, Aybak Municipality annual net revenue will be **$ 2,088 USD** as result of this project.

SUSTAINABILITY ANALYSIS
FOR
AYBAK BUS TERMINAL CONSTRUCTION

MONTHLY AND ANNUAL REVENUE GENERATION				
Item	**No**	**Daily Revenue (USD)**	**Total Revenue Monthly (USD)**	**Total Revenue Annually (USD)**
No of parking lot users (Vehicles/day)	118	23.6	708	8,496
Canteens	2		20	240
No of user of Latrine ($ 0.10 USD/Per user)	160		16	200
Total Revenue Monthly and Annually (USD)			**744**	**8,936**

MONTHLY AND ANNUAL O&M EXPENSES					
Description	**Unit**	**Monthly Salary**	**Quantity**	**Total Cost/Month (USD)**	**Total Cost/Annual (USD)**
Chawkidar/Guard(male)+ cleaner	Person	100	2	200	2,400
Materials and supplies	No			70	840
Maintenance of land and buildings	LS			50	600
Black water removal	LS			100	1200
Total				**420**	**5,040**

RENENUE GENERATION ANALYSIS				
Monthly Revenue (USD)	**Monthly Expenses (USD)**	**Monthly Contractor Profit (USD)**	**Monthly Municipality Net Revenue (USD)**	**Annual Municipality Net Revenue (USD)**
744	**420**	**150**	**174**	**2,088**

IX. Capacity Development:

The project will help to develop the capacity of municipal officials and citizen representatives by applying a learning-by-doing approach in terms of planning, implementing, monitoring, and managing during the following project activities:

- Project selection process
- Project development process
- Project procurement process
- Project implementation process
- Project monitoring process
- Public-private partnerships process

X. Unique Aspects of Project:

- The project will improve public sanitation and provide a clean environment for passengers.
- SDAG members, women and youths were involved in project selection of this project.
- This project increases revenues and helps maintain the sustainability of municipal services through the creation of public-private partnerships.

XI. Sketches:

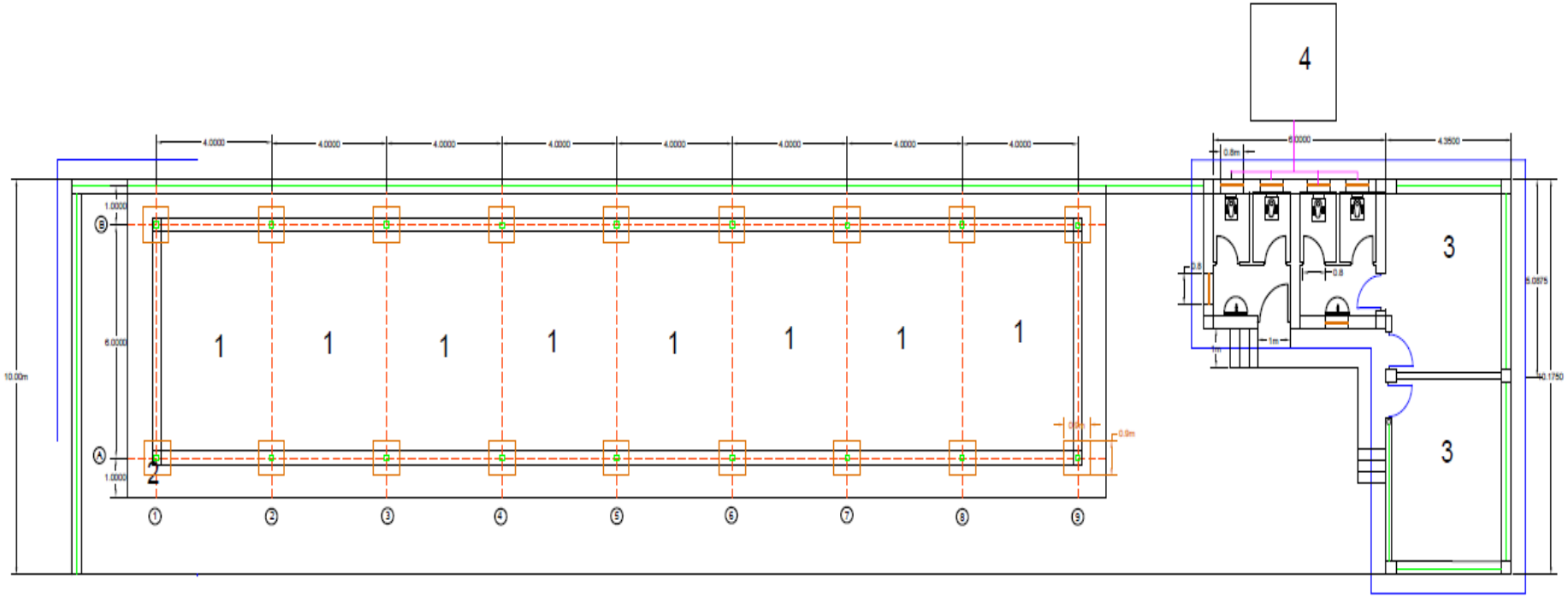

XII. Photos – Pre-Implementation:
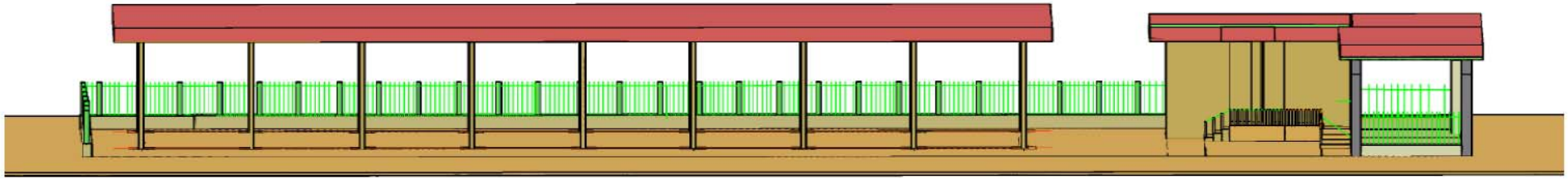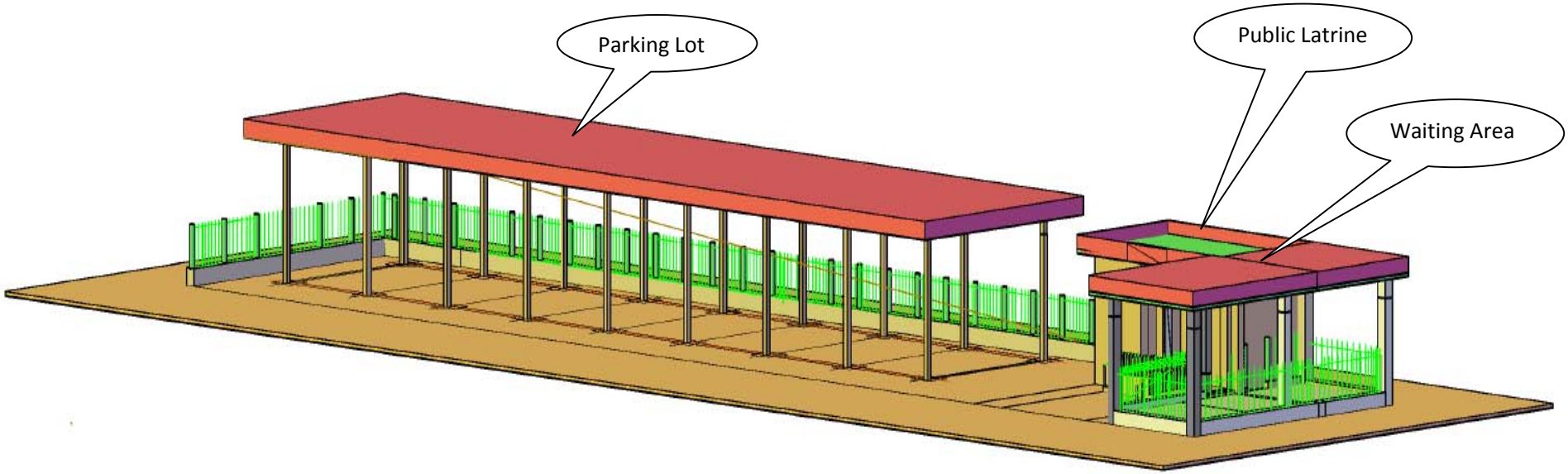
XIII. Conceptual Drawings – Post-Implementation: