The Afghanistan Engineering Support Program assembled this deliverable. It is an approved, official USAID document. Budget information contained herein is for illustrative purposes. All policy, personal, financial, and procurement sensitive information has been removed. Additional information on the report can be obtained from Firouz Rooyani, Tetra Tech Sr. VP International Operations, (703) 387-2151.

United States Agency for International Development
Office of Economic Growth and Infrastructure
Afghanistan Engineering Support Program

Site Visit Report	Project: **Construction of Parking Lot and Park Improvement**
Location: **Taloqan City, Takhar Province**	**Coordinates:** **Latitude: N 6°44'10.356" Longitude: E °32'29.988"**
Inspection Date: **November 16, 2013**	Weather: **Sunny, Temp @ 19°C, No Precipitation**
[redacted]	Status: **Complete**

PRESENTED TO

United States Agency for International Development (USAID)
Office of Economic Growth and Infrastructure (OEGI)

Ramp UP North

Great Massoud Road

[redacted]

Date: **5/15/2014**

Title: **Deputy Chief of Party**

PRESENTED BY

Tetra Tech, Inc.
Afghanistan Engineering Support Program
Contract No. EDH-I-00-08-00027-00
Task Order No. 1

Work Order WO-LT-0009 AMD #5

Shash Darak
Kabul, Afghanistan

EXECUTIVE SUMMARY

The Construction of Taloqan Parking Lot and Park Improvement project is located in Taloqan City, Takhar Province. It includes construction of parking lot , placement of 2200 square meters terrazzo tiles for parking lot, drainage ditches, two (2) sunshade canopies, a Guard room, stone masonry boundary wall , installation of fence, and construction of 2100 square meters of terrazzo tile paved sidewalk.

On November 16, 2013, two (2) engineers from Tetra Tech (Tt), Afghanistan Engineering Support Program (AESP) traveled to Taloqan City to inspect and evaluate the visible completed works for the Taloqan Parking Lot and Park Improvement Construction project.

The only deficiency observed during the site visit was the appearance of exposed electrical wires due to poor installation of the electrical PVC conduits on the sunshade canopies.

Tt has determined that the construction work for the construction of Taloqan Parking Lot and Park Improvement project is complete except for the guard room that has not been constructed. Based on the DAI site engineer, the project has been handed over to the Taloqan Municipality.

DISCLAIMER

The author's views expressed in this publication do not necessarily reflect the views of the United States Agency for International Development or the United States Government.

TABLE OF CONTENTS

EXECUTIVE SUMMARY i
1.0 INTRODUCTION 2
2.0 SITE VISIT 2
3.0 SITE VISIT DETAILS 2

LIST OF FIGURES

Figure 1. **View of the terrazzo paved parking lot** 3
Figure 2. **View of the terrazzo paved parking lot** 3
Figure 3. **View of the terrazzo paved parking lot and sunshade canopies** 4
Figure 4. **View of the sunshade canopy covered 250 square meters area** 4
Figure 5. **View of the sunshade canopy covered 450 square meters area** 5
Figure 6. **View of the improper installation of PVC conduit** 5
Figure 7. **View of the improper installation of PVC conduit** 6
Figure 8. **View of the Northern terrazzo paved sidewalk and boundary wall** 6
Figure 9. **View of the Northern terrazzo paved sidewalk and drainage ditch** 7
Figure 10. **View of the Eastern terrazzo paved sidewalk and boundary wall** 7
Figure 11. **View of the Southern terrazzo paved sidewalk and drainage ditch** 8

APPENDICES

APPENDIX A – DRAWINGS
APPENDIX B –PROJECT PROPOSAL

This report was prepared for the United States Agency for International Development, Contract No. EDH-I-00-08-00027-00, Task Order 01, Afghanistan Engineering Support Program.

1.0 INTRODUCTION

The construction of Taloqan Parking Lot and Park Improvement project is located in district no 2 of Taloqan City, Takhar Province.

This project is funded by USAID/RAMP UP-North and includes construction of parking lot for 48 vehicles and placement of 2200 square meters terrazzo tiles for the parking lot, drainage ditches, two (2) sunshade canopies, Guard room, stone masonry boundary wall including installation of 506 meters fence , and construction of 2100 square meters terrazzo tile paved sidewalk.

2.0 SITE VISIT

On November 17, 2013, Two (2) engineers from Tetra Tech (Tt), Afghanistan Engineering Support Program (AESP) traveled to Taloqan City to inspect and evaluate the visible completed works. The recently provided project documentation includes drawings in Appendix A, and project proposal in Appendix B.

Tt engineers were accompanied by DAI site engineer during the site inspection and evaluation. Findings of this site observation are documented in this report. Including photos provided in the figures section on pages 3 to 8

3.0 SITE VISIT DETAILS

The following was observed during the site visit of the project:

1. Construction and placement of 2200 square meters terrazzo tiles for the parking lot and construction of drainage ditches on both sides of the parking lot is complete. (See Figures 1, 2, and 3)
2. Construction of two (2) sunshade canopies one with 450 square meters area and another with 250 square meters area for the vehicles parking lots are complete. (See Figures 3, 4, and 5). The following deficiency was observed:
    a. **Deficiency:** Some electrical wires are visible due to poor installation of Polyvinyl Chloride (PVC) conduit. (See Figures 6 and 7)
3. Construction of stone masonry boundary wall and installation of 506 linear meters of fence is complete. (See Figures 8 and 10)
4. Construction of 2100 square meters terrazzo tile paved sidewalk for the Park Improvement project is complete. (See Figures 8, 9, 10, and 11)
5. Construction of 675 meters stone masonry drainage ditches on the northern and southern sidewalks is complete. (See Figures 9 and 11)
6. The Guard room has not been constructed where the drawings and project proposal indicates construction of 3.0 X 2.5 meters Guard room.

Based on the above summary, Tt has determined that the construction work for the Taloqan Parking Lot and Park Improvement Construction project is complete and handed over to the Taloqan Municipality. However the guard room shown in the drawings and stated in the project proposal has not been constructed.

FIGURES

Figure 1. View of the terrazzo paved parking lot

Figure 2. View of the terrazzo paved parking lot

FIGURES (CONTINUED)

Figure 3. View of the terrazzo paved parking lot and sunshade canopies

Figure 4. View of the sunshade canopy covering 250 square meters area

FIGURES (CONTINUED)

Figure 5. View of the sunshade canopy covering 450 square meters area

Figure 6. View of the improper installation of PVC conduit

FIGURES (CONTINUED)

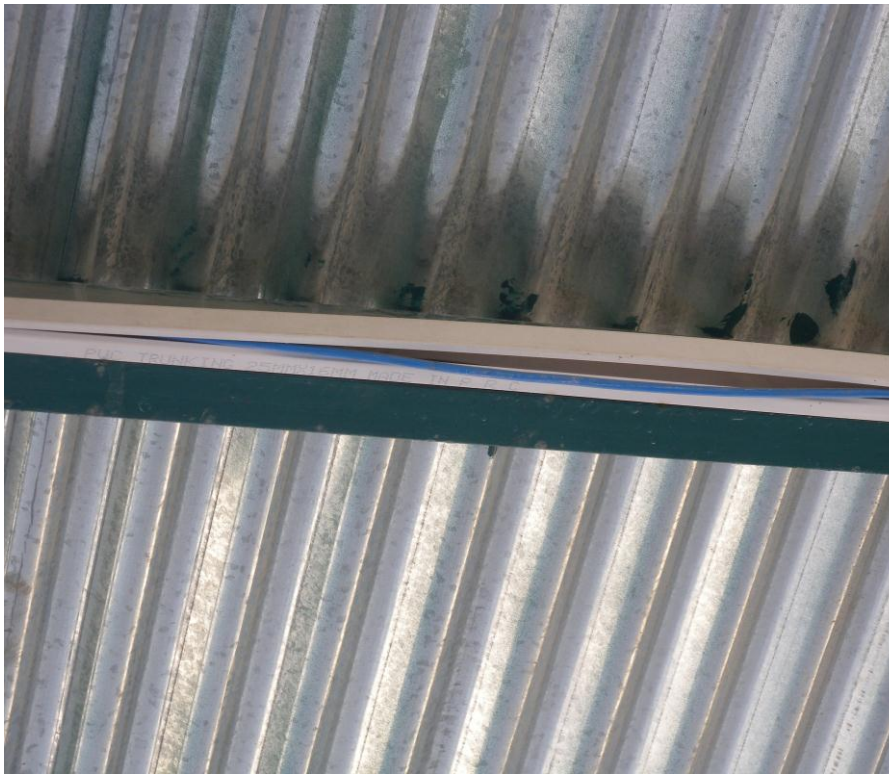

Figure 7. View of the improper installation of PVC conduit

Figure 8. View of the Northern terrazzo paved sidewalk and fence boundary wall

FIGURES (CONTINUED)

Figure 9. View of the Northern terrazzo paved sidewalk and drainage ditch

Figure 10. View of the Eastern terrazzo paved sidewalk and fence boundary wall

FIGURES (CONTINUED)

Figure 11. View of the Southern terrazzo paved sidewalk and drainage ditch

APPENDIX A – DRAWINGS

-RAMP-UP-NORTH-

TALOQAN MUNICIPALITY

Architecture & Construction details of Taloqan Parking Lot

Date - November 2012

SITE PLAN

Taloqan City site plan, it is perepared to show the exact location of the project.
all dimensions are in cm unless stated.

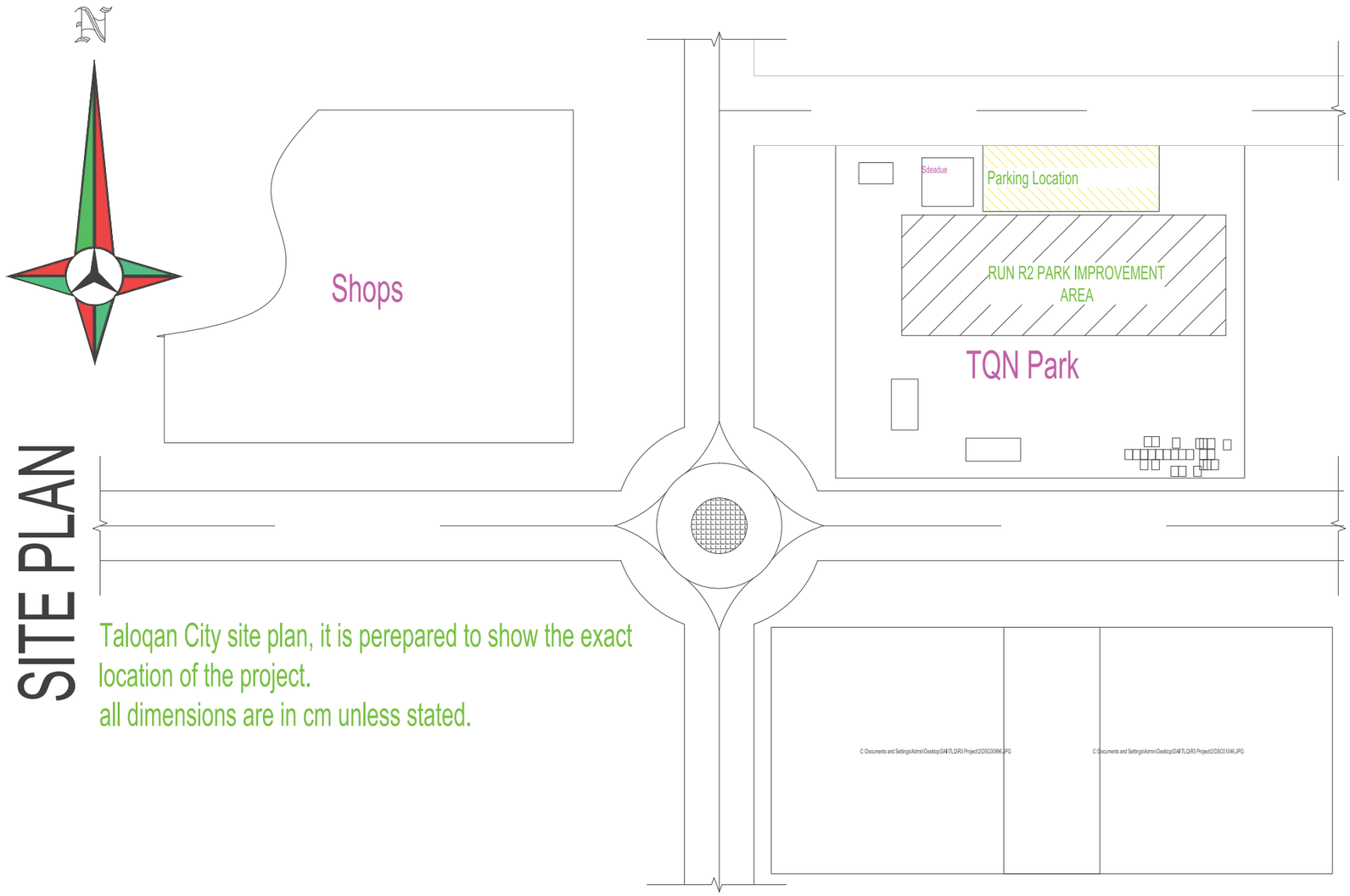

Drawing Title: Site plan	Action:	Name:	Position / Organization :	Project Name: Parking
	Surveyed and drawn by:	[redacted]	Taloqan Municipality Architect.	
	Conceptual Approved by:		Mayor of Taloqan	
	Conceptual Approved by:		Head of Taloqan SDAG	
Drawing Number : 1/14	Designed by:		RUN-Taloqan Municipal Engineering Advisor	Date:Nov-2012
	Technicial checked by:		RUN Engineering Advisor	
	Approved by:		RUN Project Manager	

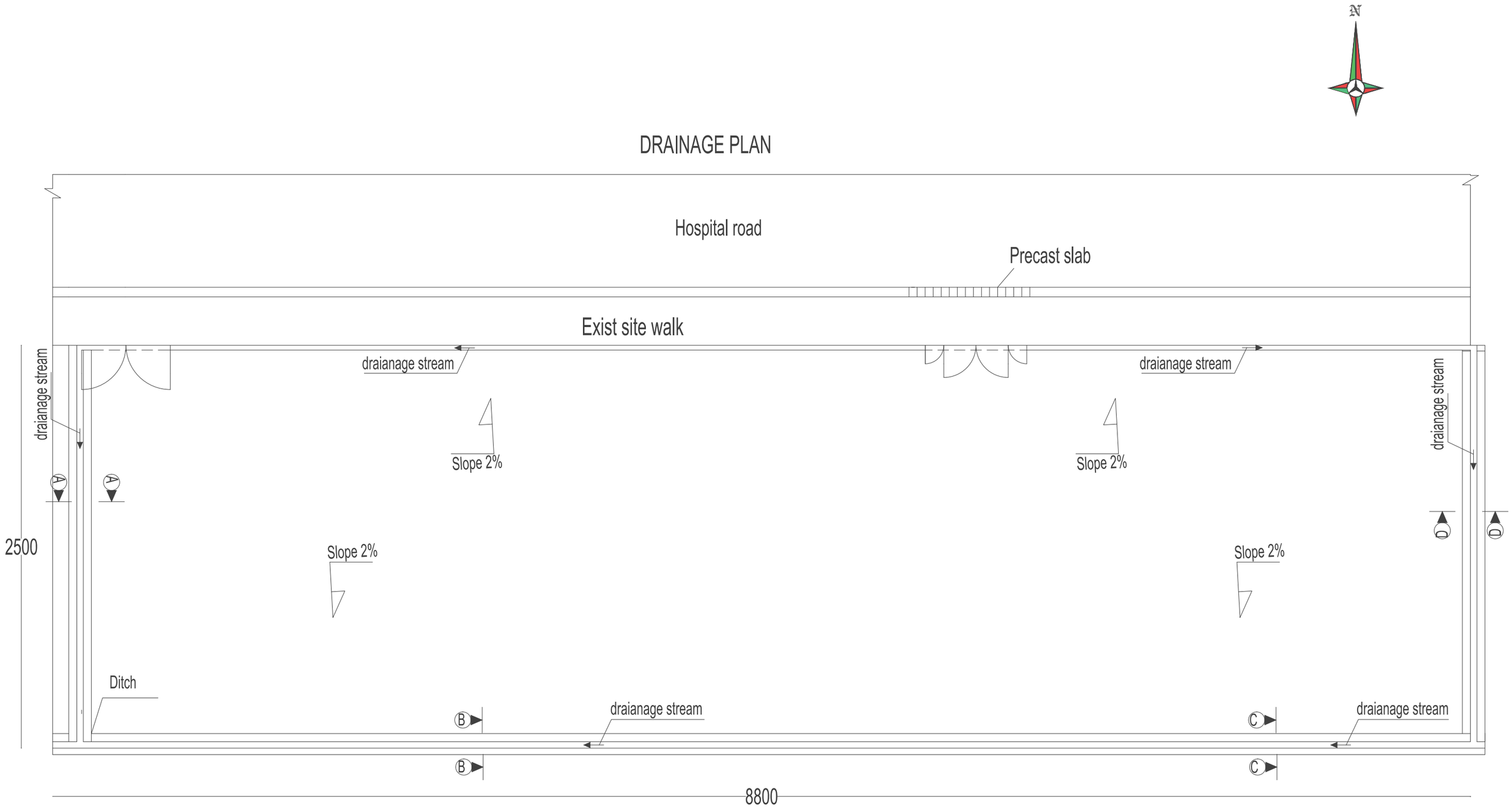

Drawing Title: Drainage plan	Action:	Name:	Position / Organization :	Project Name: Parking
	Surveyed and drawn by:	[redacted]	Taloqan Municipality Architect.	
	Conceptual Approved by:		Mayor of Taloqan	
	Conceptual Approved by:		Head of Taloqan SDAG	
Drawing Number : 2/14	Designed by:		RUN-Taloqan Municipal Engineering Advisor	Date:Nov-2012
	Technicial checked by:		RUN Engineering Advisor	
	Approved by:		RUN Project Manager	

PARKING PLAN

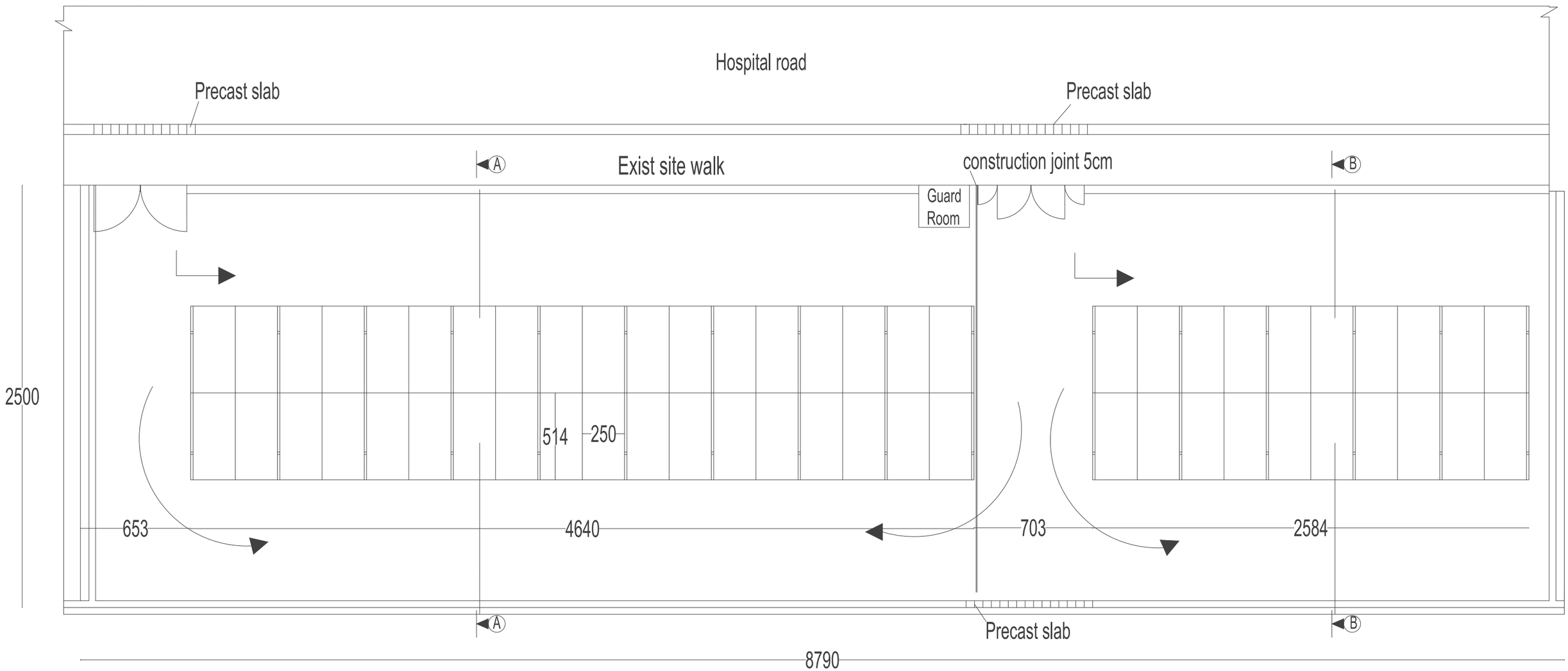

Drawing Title: Car Parking Plan	Action:	Name:	Position / Organization :	Project Name: Parking
	Surveyed and drawn by:	[redacted]	Taloqan Municipality Architect.	
	Conceptual Approved by:		Mayor of Taloqan	
	Conceptual Approved by:		Head of Taloqan SDAG	
Drawing Number : 3/14	Designed by:		RUN-Taloqan Municipal Engineering Advisor	Date:Nov-2012
	Technicial checked by:		RUN Engineering Advisor	
	Approved by:		RUN Project Manager	

ROOF PLAN LAYOUT

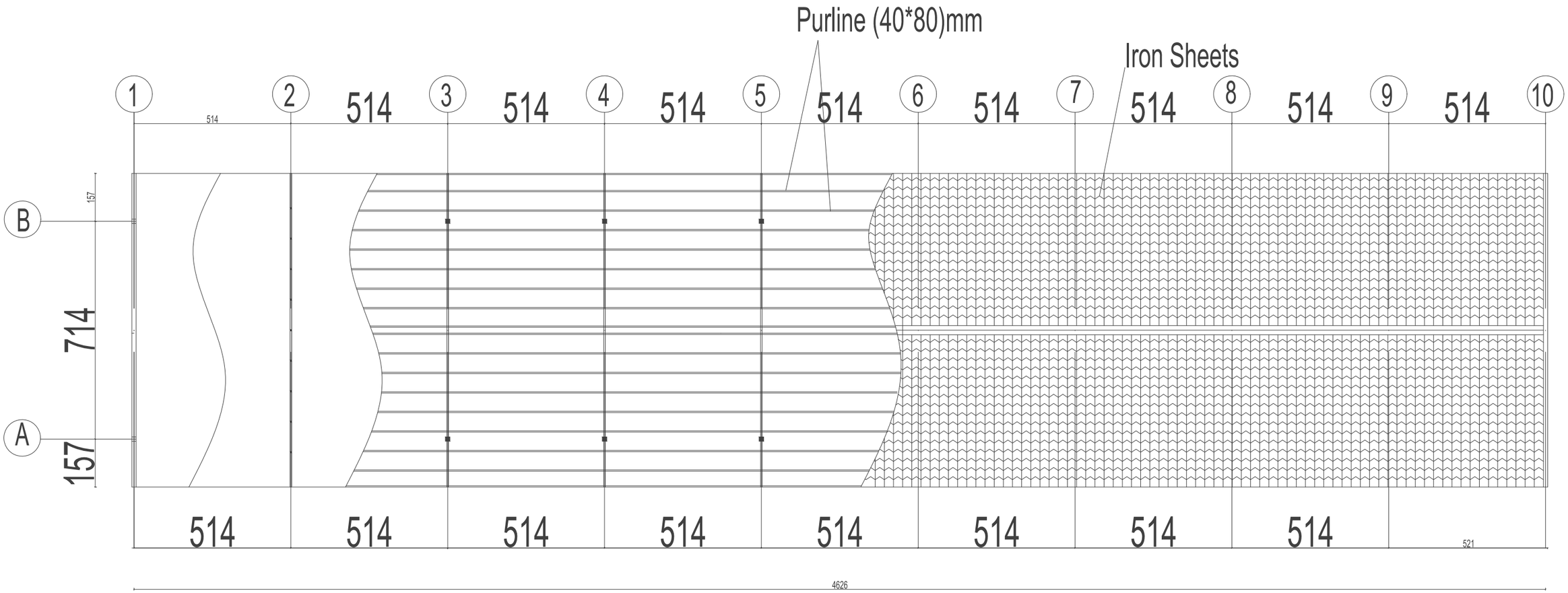

Drawing Title: Roof truss layout	Action:	Name:	Position / Organization :	Project Name: Parking
	Surveyed and drawn by:	[redacted]	Taloqan Municipality Architect.	
	Conceptual Approved by:		Mayor of Taloqan	
	Conceptual Approved by:		Head of Taloqan SDAG	
Drawing Number : 4/14	Designed by:		RUN-Taloqan Municipal Engineering Advisor	Date:Nov-2012
	Technicial checked by:		RUN Engineering Advisor	
	Approved by:	Colin Coyle	RUN Project Manager	

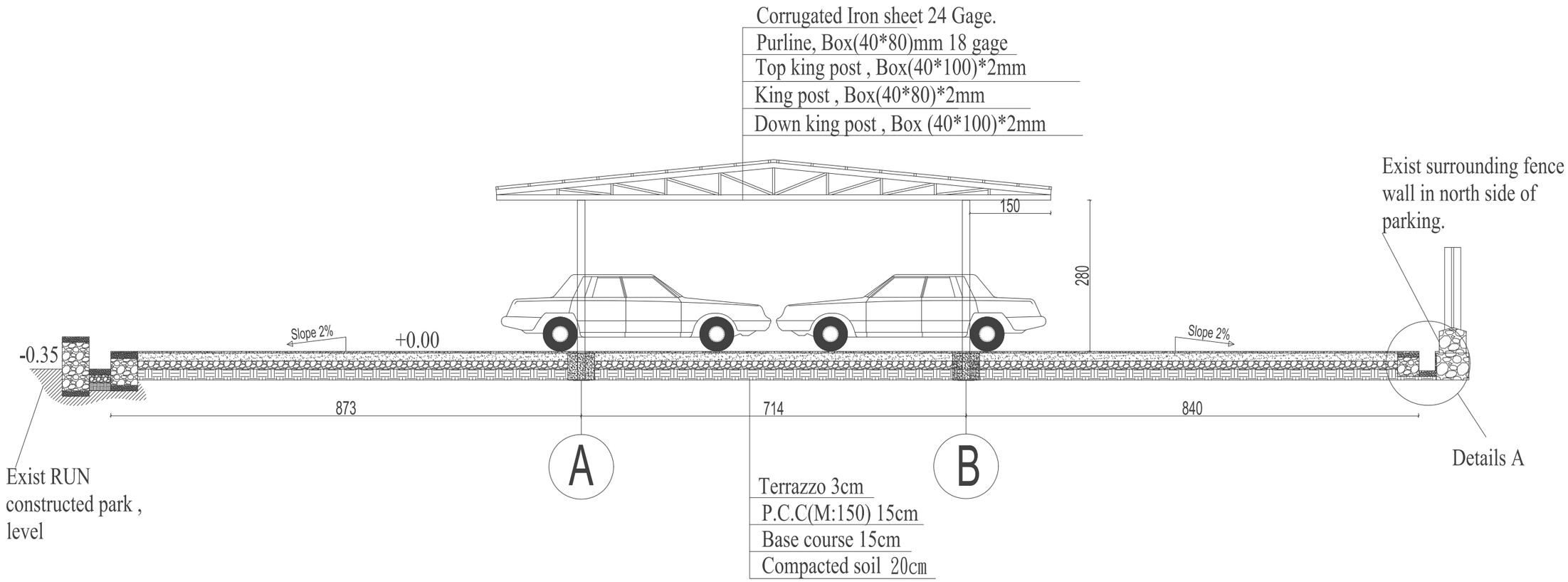

SECTION : A-A

Drawing Title: Section A-A	Action:	Name:	Position / Organization :	Project Name: Parking
	Surveyed and drawn by:	[redacted]	Taloqan Municipality Architect.	
	Conceptual Approved by:		Mayor of Taloqan	
	Conceptual Approved by:		Head of Taloqan SDAG	
Drawing Number : 5/14	Designed by:		RUN-Taloqan Municipal Engineering Advisor	Date:Nov-2012
	Technicial checked by:		RUN Engineering Advisor	
	Approved by:		RUN Project Manager	

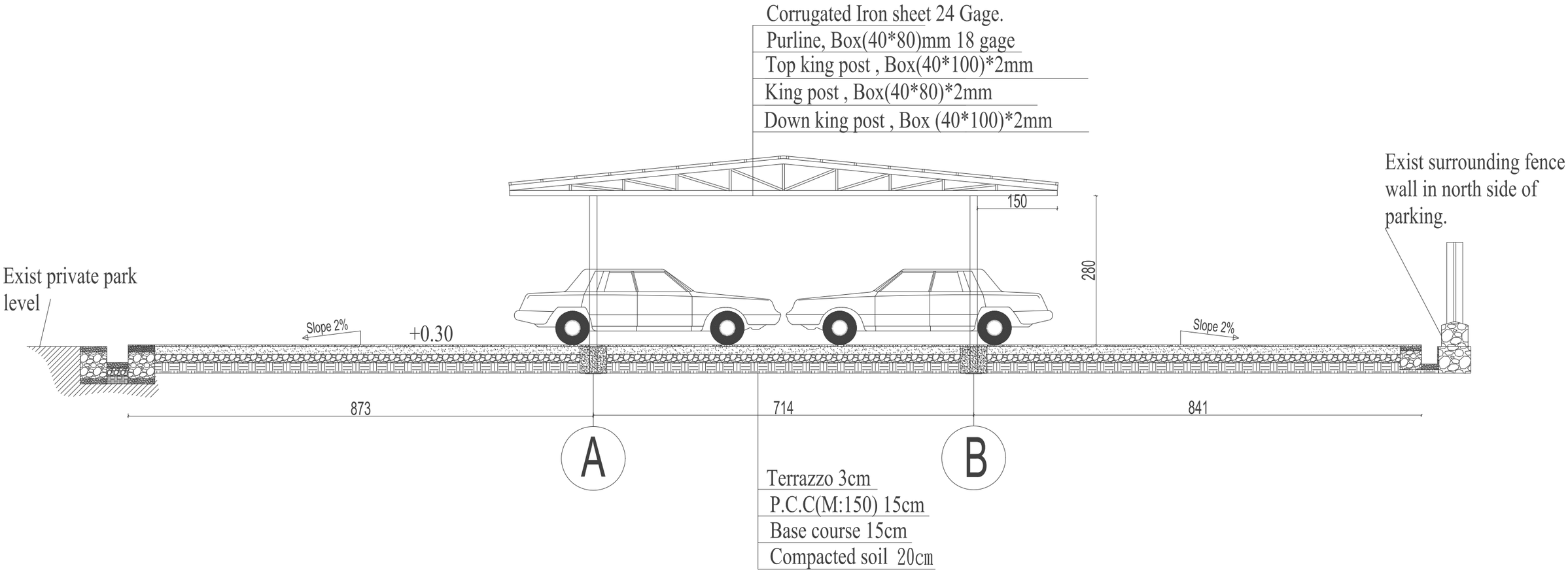

SECTION B-B

Drawing Title: Section B-B	Action:	Name:	Position / Organization :	Project Name: Parking
	Surveyed and drawn by:	[redacted]	Taloqan Municipality Architect.	
	Conceptual Approved by:		Mayor of Taloqan	
	Conceptual Approved by:		Head of Taloqan SDAG	
Drawing Number : 6/14	Designed by:		RUN-Taloqan Municipal Engineering Advisor	Date:Nov-2012
	Technicial checked by:		RUN Engineering Advisor	
	Approved by:		RUN Project Manager	

Section A-A

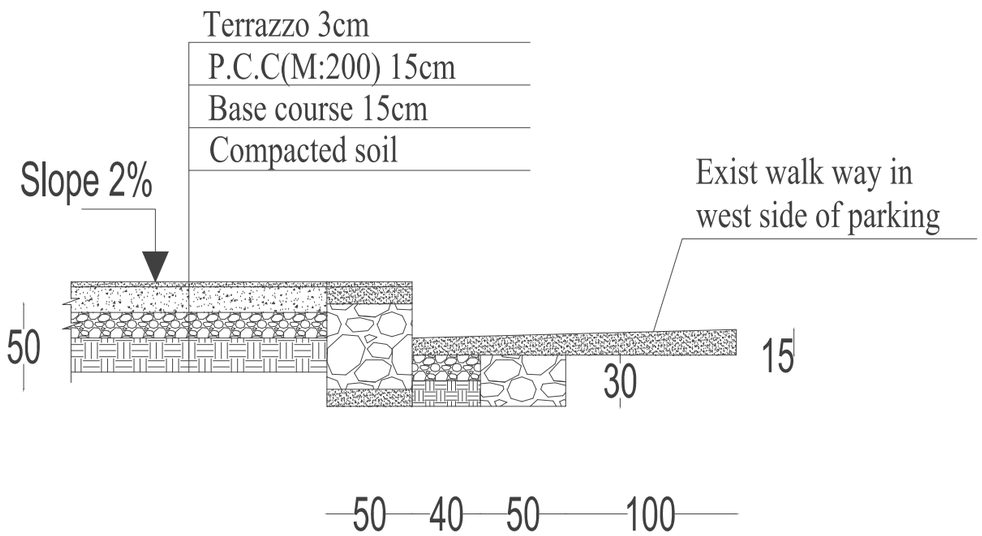

Section B-B

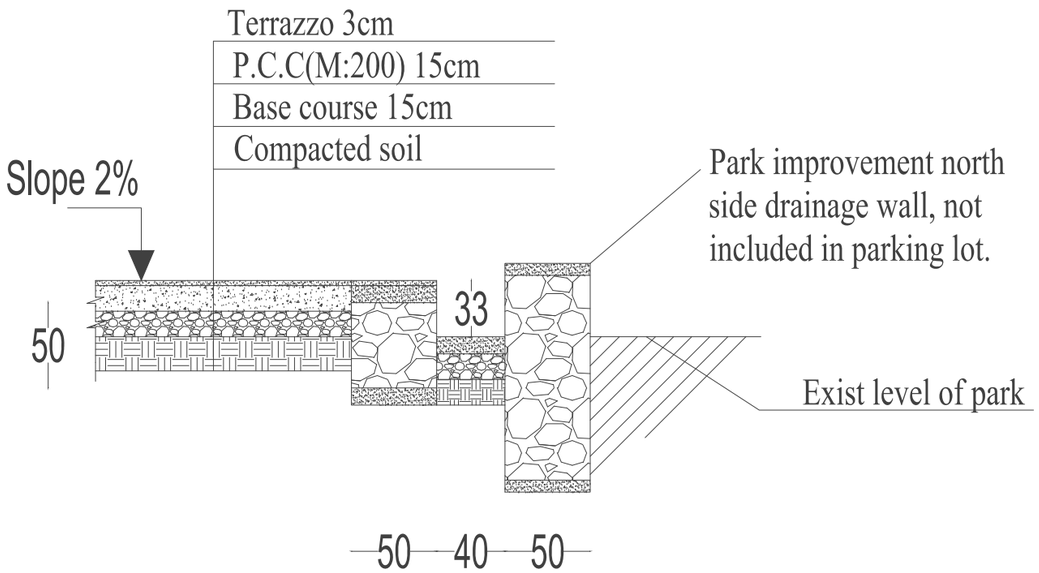

Section B-B L=59m

Drawing Title: Section A & B	Action:	Name:	Position / Organization :	Project Name: Parking
	Surveyed and drawn by:	[redacted]	Taloqan Municipality Architect.	
	Conceptual Approved by:		Mayor of Taloqan	
	Conceptual Approved by:		Head of Taloqan SDAG	
Drawing Number : 7/14	Designed by:		RUN-Taloqan Municipal Engineering Advisor	Date:Nov-2012
	Technicial checked by:		RUN Engineering Advisor	
	Approved by:		RUN Project Manager	

Section C-C

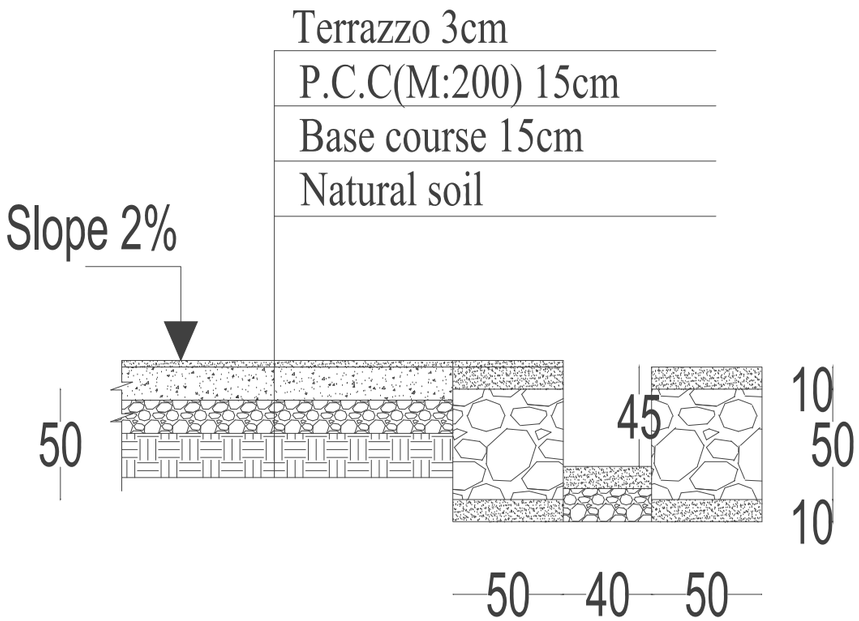

Section D-D

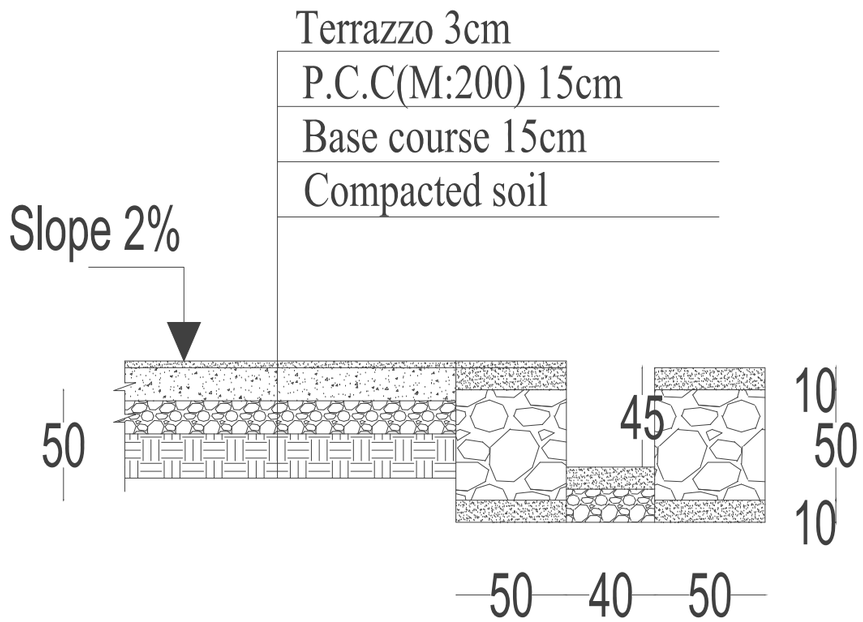

Section C-C L=28m

Drawing Title: Section C & D	Action:	Name:	Position / Organization :	Project Name: Parking
	Surveyed and drawn by:	[redacted]	Taloqan Municipality Architect.	
	Conceptual Approved by:		Mayor of Taloqan	
	Conceptual Approved by:		Head of Taloqan SDAG	
Drawing Number : 8/14	Designed by:		RUN-Taloqan Municipal Engineering Advisor	Date:Nov-2012
	Technicial checked by:		RUN Engineering Advisor	
	Approved by:		RUN Project Manager	

Exist surrounding fence wall in north side of parking.

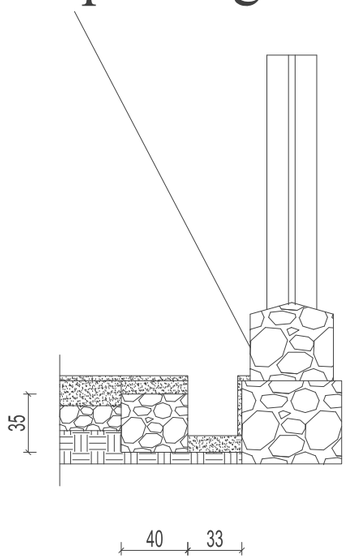

Details A

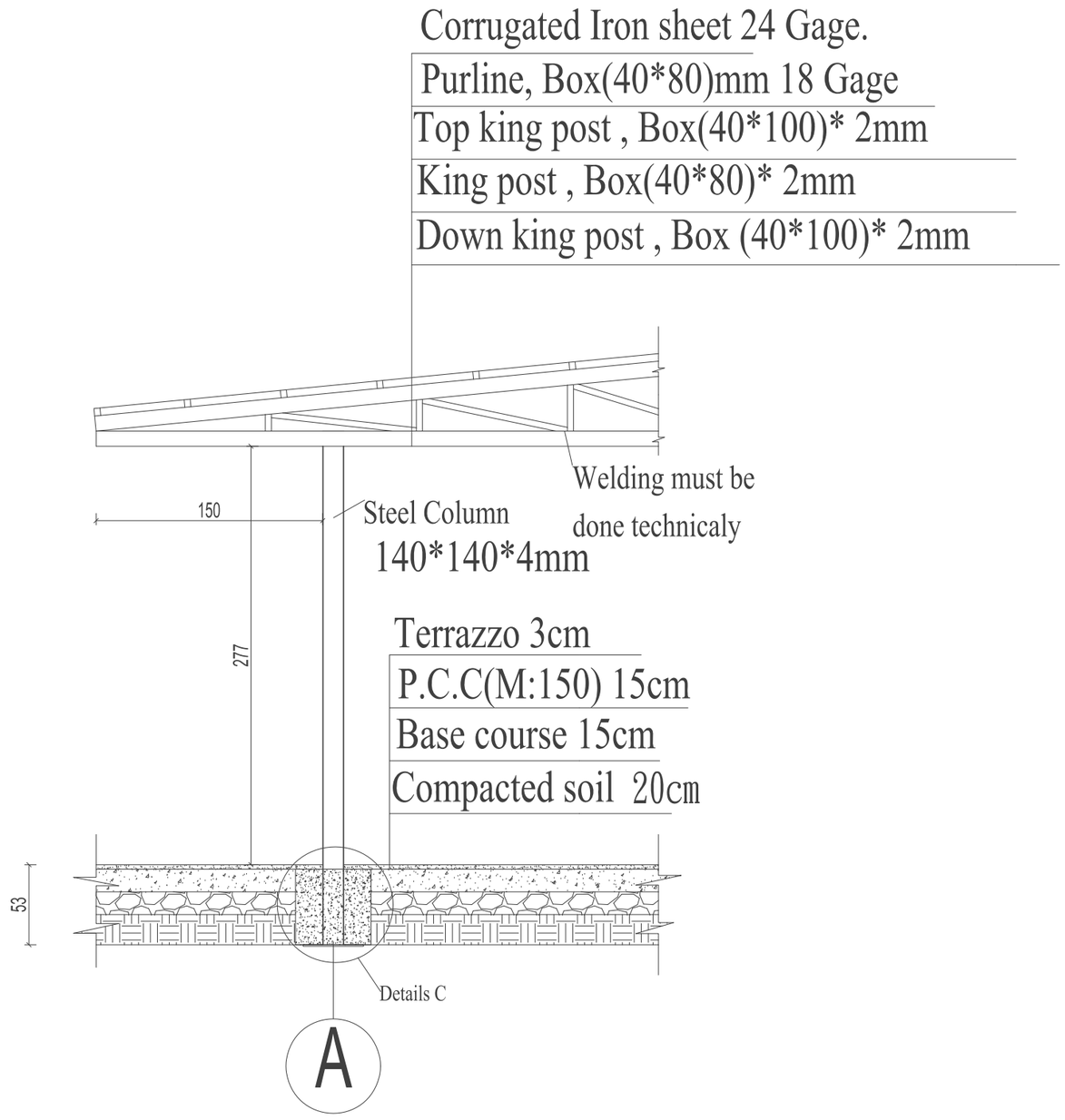

Details B

Drawing Title: Detail A&B	Action:	Name:	Position / Organization :	Project Name: Parking
	Surveyed and drawn by:	[redacted]	Taloqan Municipality Architect.	
	Conceptual Approved by:		Mayor of Taloqan	
	Conceptual Approved by:		Head of Taloqan SDAG	
Drawing Number : 9/14	Designed by:		RUN-Taloqan Municipal Engineering Advisor	Date:Nov-2012
	Technicial checked by:		RUN Engineering Advisor	
	Approved by:		RUN Project Manager	

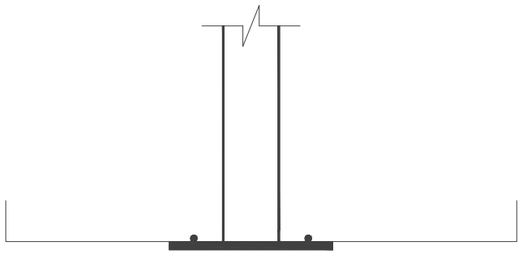

Section A-A

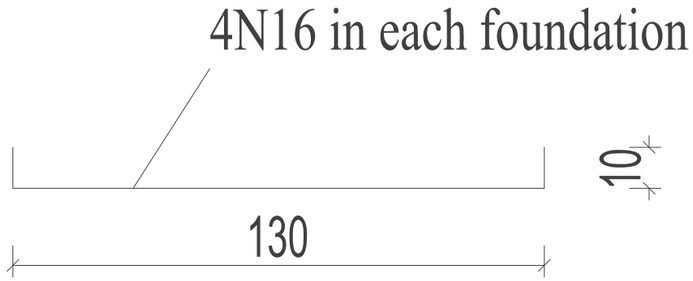

Details C

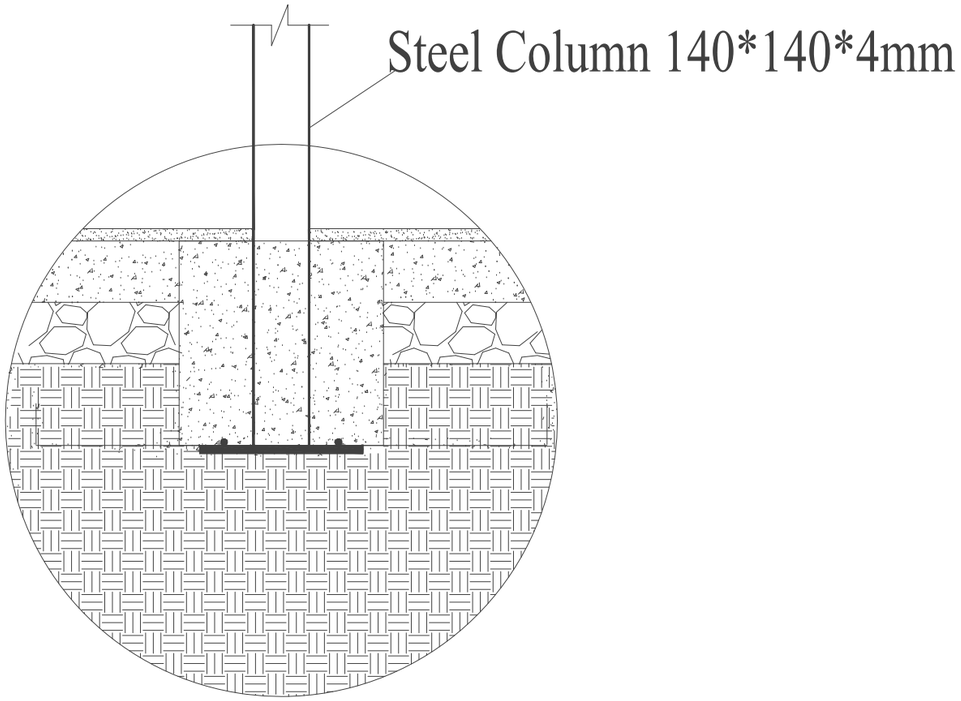

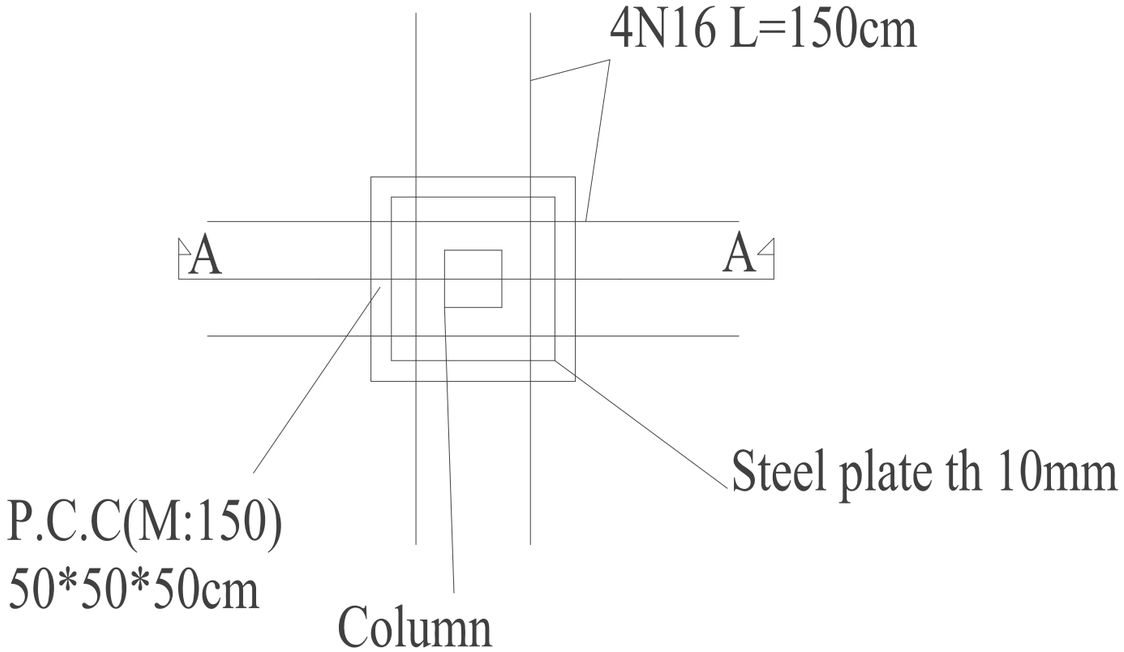

Drawing Title: Column details	Action:	Name:	Position / Organization :	Project Name: Parking
	Surveyed and drawn by:	[redacted]	Taloqan Municipality Architect.	
	Conceptual Approved by:		Mayor of Taloqan	
	Conceptual Approved by:		Head of Taloqan SDAG	
Drawing Number : 10/14	Designed by:		RUN-Taloqan Municipal Engineering Advisor	Date:Nov-2012
	Technicial checked by:		RUN Engineering Advisor	
	Approved by:		RUN Project Manager	

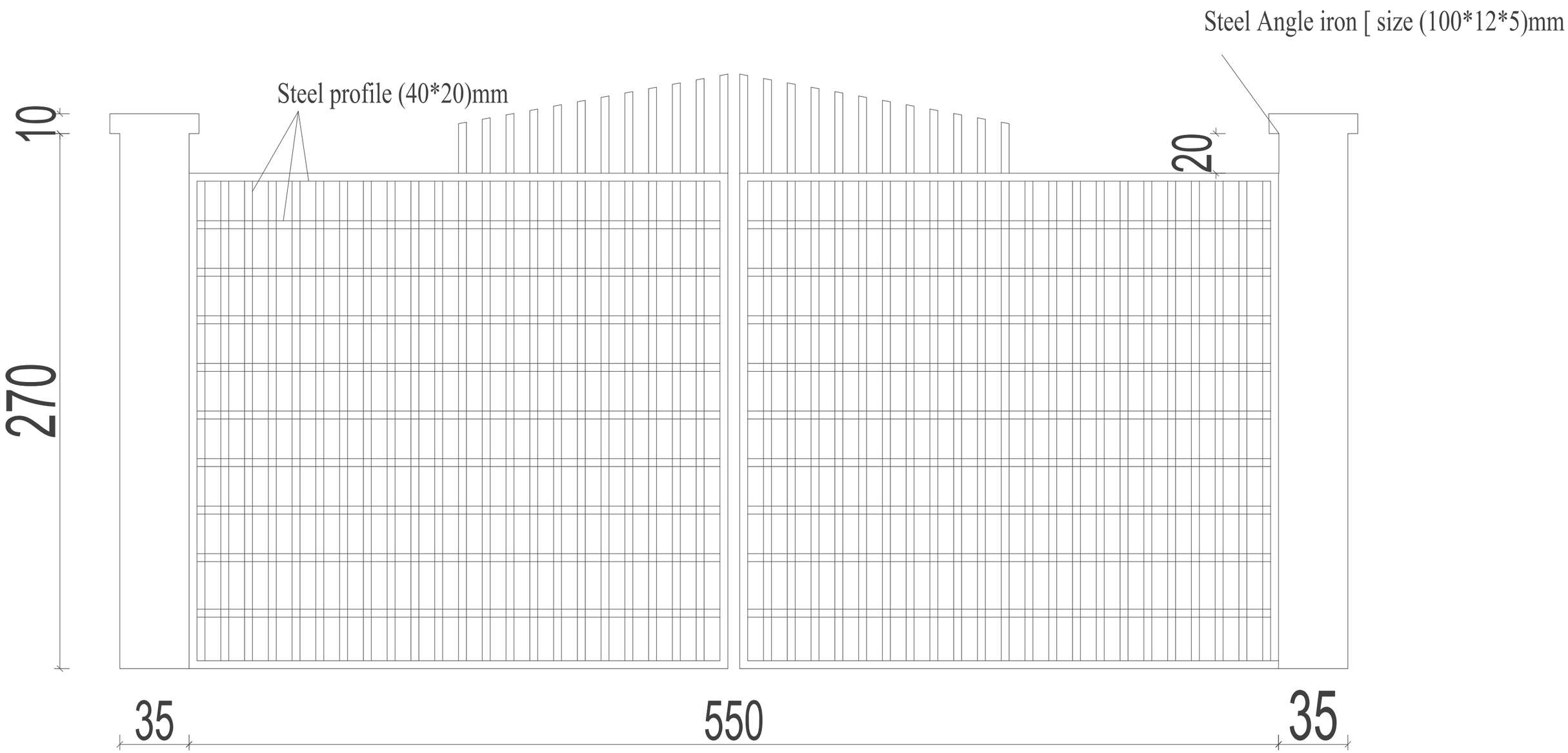

Drawing Title: Door	Action:	Name:	Position / Organization :	Project Name: Parking
	Surveyed and drawn by:	[redacted]	Taloqan Municipality Architect.	
	Conceptual Approved by:		Mayor of Taloqan	
	Conceptual Approved by:		Head of Taloqan SDAG	
Drawing Number : 11/14	Designed by:		RUN-Taloqan Municipal Engineering Advisor	Date:Nov-2012
	Technicial checked by:		RUN Engineering Advisor	
	Approved by:		RUN Project Manager	

Precast slab (70*50*20)cm

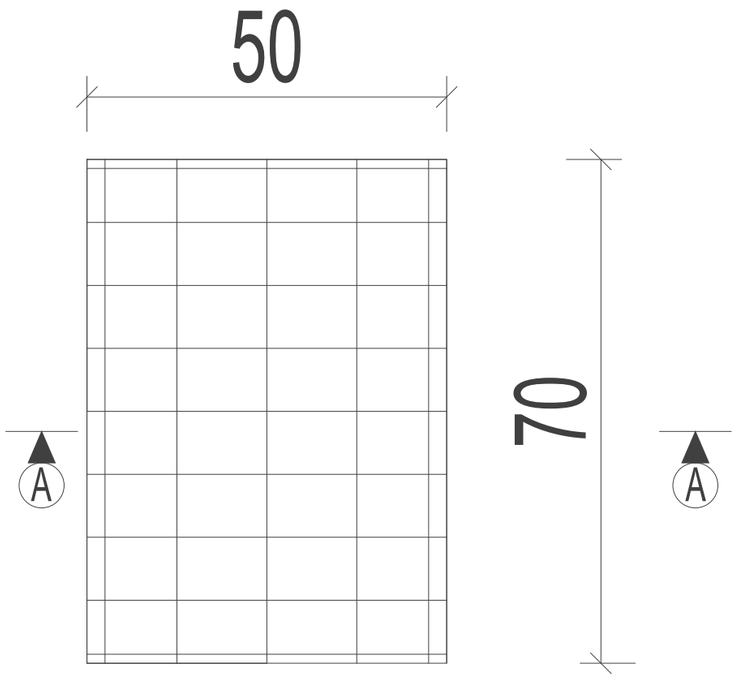

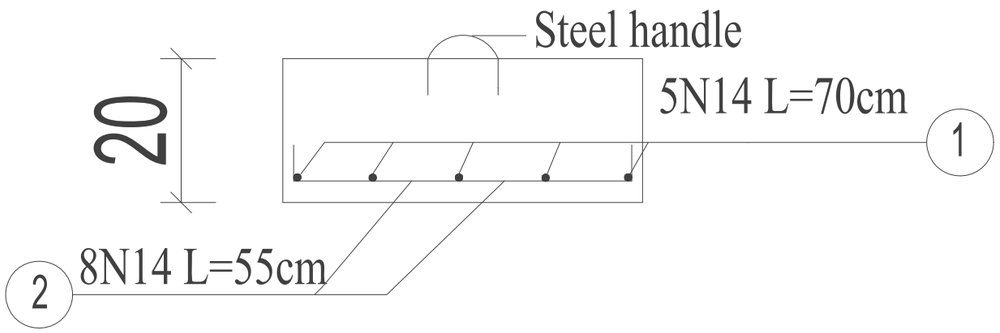

Section A-A

Drawing Title: Precast slab	Action:	Name:	Position / Organization :	Project Name: Parking
	Surveyed and drawn by:	[redacted]	Taloqan Municipality Architect.	
	Conceptual Approved by:		Mayor of Taloqan	
	Conceptual Approved by:		Head of Taloqan SDAG	
Drawing Number : 12/14	Designed by:		RUN-Taloqan Municipal Engineering Advisor	Date:Nov-2012
	Technicial checked by:		RUN Engineering Advisor	
	Approved by:		RUN Project Manager	

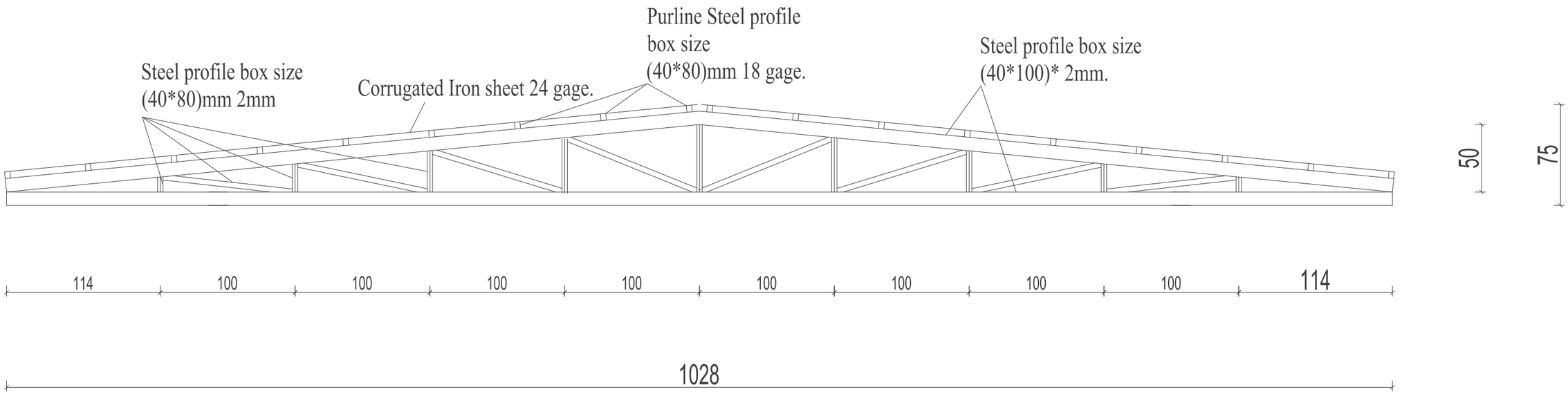

TRUSS DETAIS

Drawing Title: Truss details	Action:	Name:	Position / Organization :	Project Name: Parking
	Surveyed and drawn by:	[redacted]	Taloqan Municipality Architect.	
	Conceptual Approved by:		Mayor of Taloqan	
	Conceptual Approved by:		Head of Taloqan SDAG	
Drawing Number : 13/14	Designed by:		RUN-Taloqan Municipal Engineering Advisor	Date:Nov-2012
	Technicial checked by:		RUN Engineering Advisor	
	Approved by:		RUN Project Manager	

Drawing Title: 3D Views	Action:	Name:	Position / Organization :	Project Name: Parking
	Surveyed and drawn by:	[redacted]	Taloqan Municipality Architect.	
	Conceptual Approved by:		Mayor of Taloqan	
	Conceptual Approved by:		Head of Taloqan SDAG	
Drawing Number : 14/14	Designed by:		RUN-Taloqan Municipal Engineering Advisor	Date:Nov-2012
	Technicial checked by:		RUN Engineering Advisor	
	Approved by:		RUN Project Manager	

-RAMP-UP-NORTH-

TALOQAN MUNICIPALITY

Construction details of Taloqan Park Refurbishment

Date - November 2012

FENCE SURROUND WALL PLAN FOR PARK IMPROVEMENT

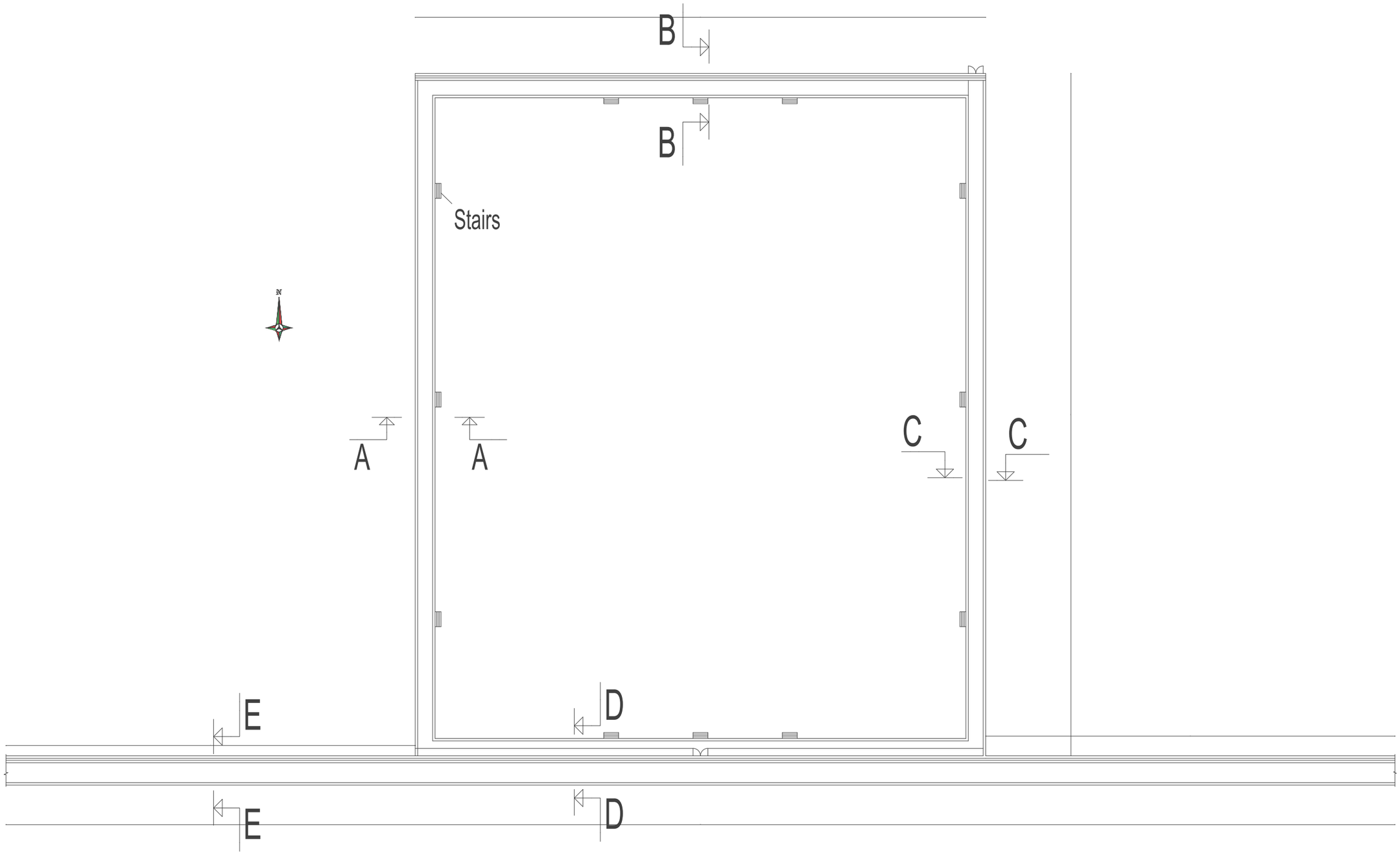

Drawing Title: Site plan	Action:	Name:	Position / Organization :	Project Name: Fence for park improvement
	Surveyed and drawn by:	[redacted]	Taloqan Municipality Architect.	
	Conceptual Approved by:		Mayor of Taloqan	
	Conceptual Approved by:		Head of Taloqan SDAG	
Drawing Number : 1/4	Designed by:		RUN-Taloqan Municipal Engineering Advisor	Date:Nov-2012
	Technicial checked by:		RUN Engineering Advisor	
	Approved by:		RUN Project Manager	

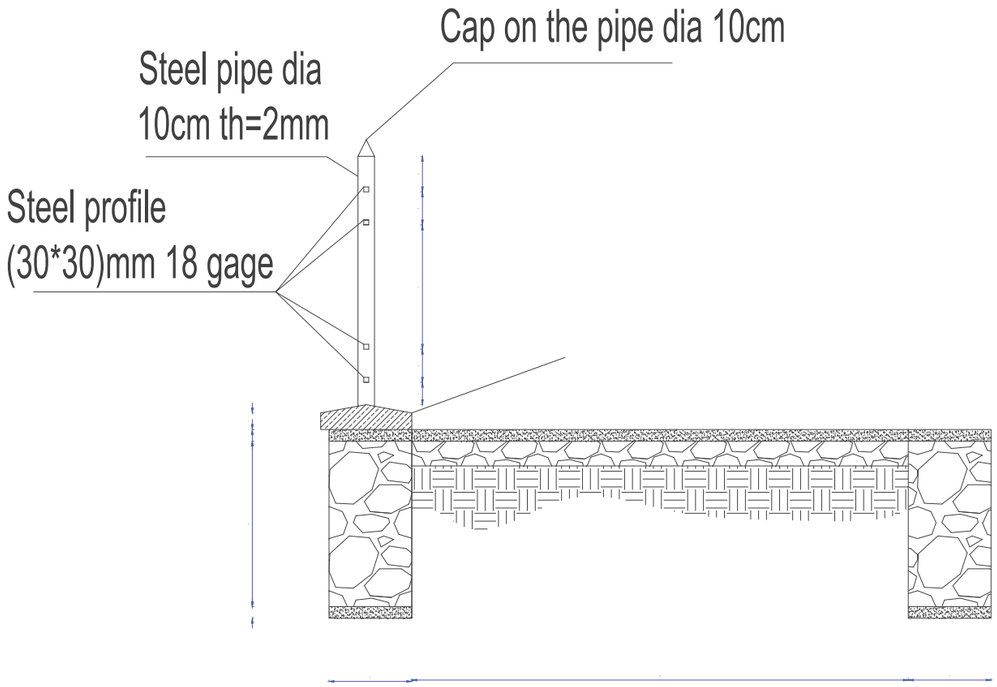

Section A-A

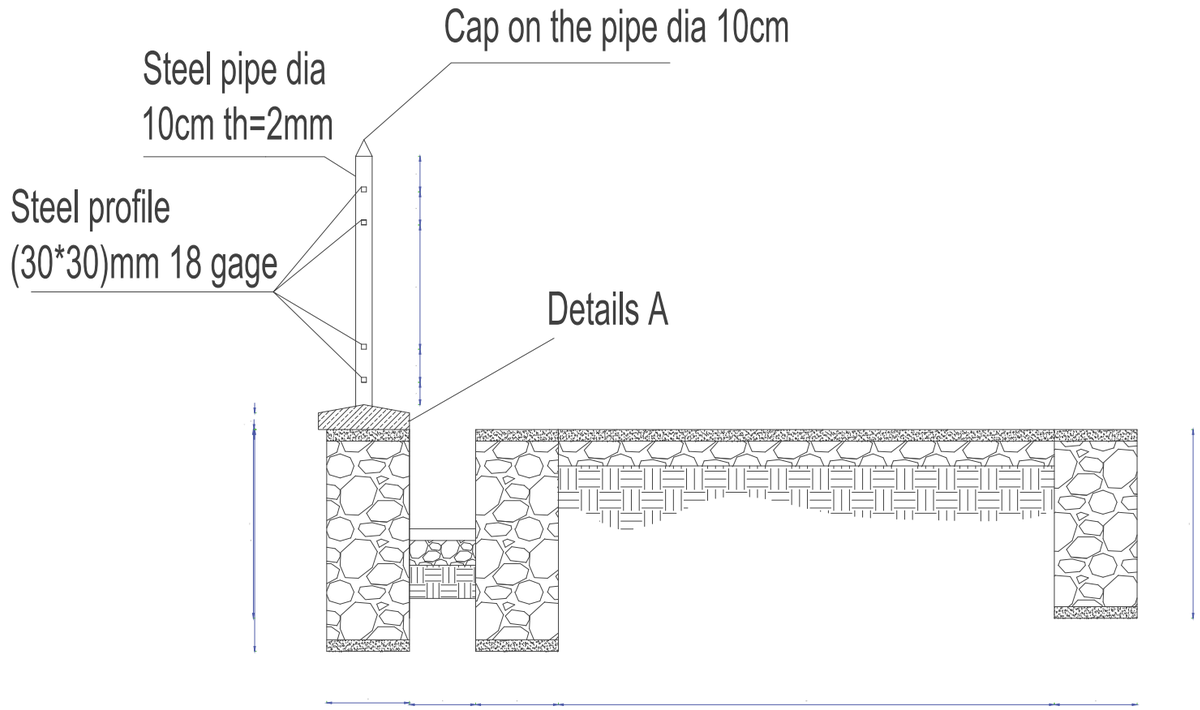

Section B-B

Drawing Title: Section A&B	Action:	Name:	Position / Organization :	Project Name: Fence for park improvement
	Surveyed and drawn by:	[redacted]	Taloqan Municipality Architect.	
	Conceptual Approved by:		Mayor of Taloqan	
	Conceptual Approved by:		Head of Taloqan SDAG	
Drawing Number : 2/4	Designed by:		RUN-Taloqan Municipal Engineering Advisor	Date:Nov-2012
	Technicial checked by:		RUN Engineering Advisor	
	Approved by:		RUN Project Manager	

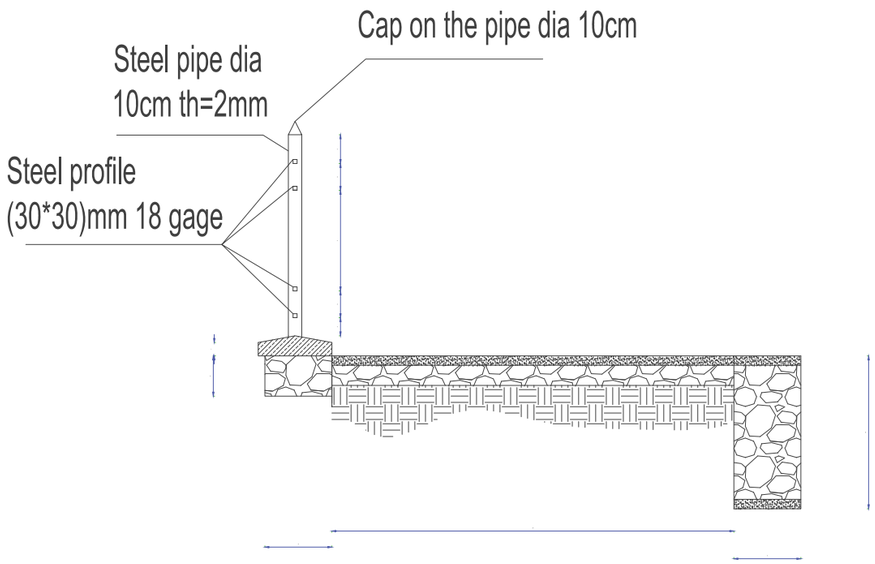

Section C-C

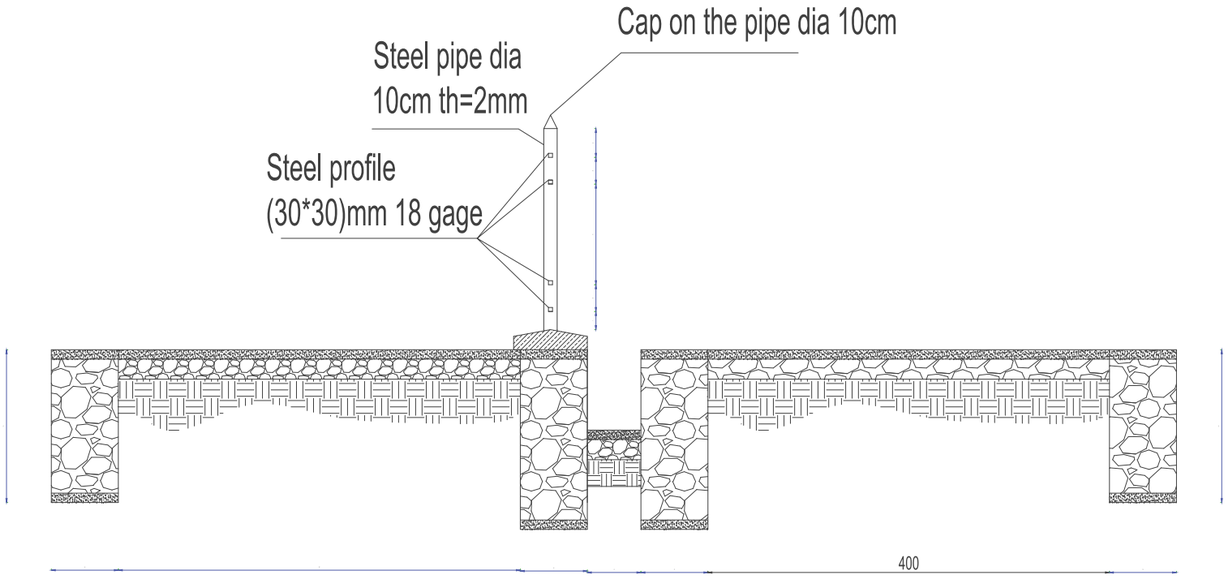

Section D-D

Drawing Title: Section C&D	Action:	Name:	Position / Organization :	Project Name: Fence for park improvement
	Surveyed and drawn by:	[redacted]	Taloqan Municipality Architect.	
	Conceptual Approved by:		Mayor of Taloqan	
	Conceptual Approved by:		Head of Taloqan SDAG	
Drawing Number : 3/4	Designed by:		RUN-Taloqan Municipal Engineering Advisor	Date:Nov-2012
	Technicial checked by:		RUN Engineering Advisor	
	Approved by:		RUN Project Manager	

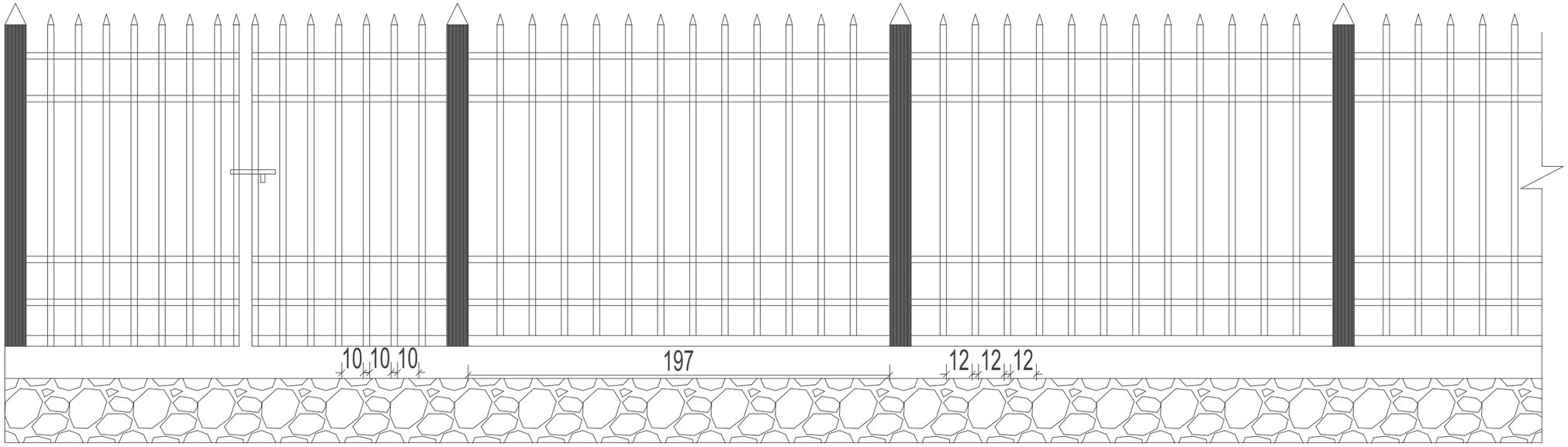

Fence front view

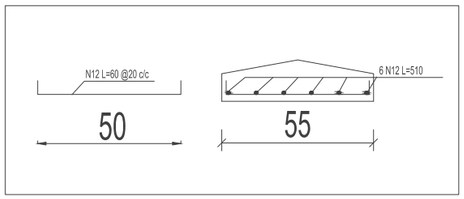

Details A

Drawing Title: Fence front view	Action:	Name:	Position / Organization :	Project Name: Fence for park improvement
	Surveyed and drawn by:	[redacted]	Taloqan Municipality Architect.	
	Conceptual Approved by:		Mayor of Taloqan	
	Conceptual Approved by:		Head of Taloqan SDAG	
Drawing Number : 4/4	Designed by:		RUN-Taloqan Municipal Engineering Advisor	Date:Nov-2012
	Technicial checked by:		RUN Engineering Advisor	
	Approved by:		RUN Project Manager	

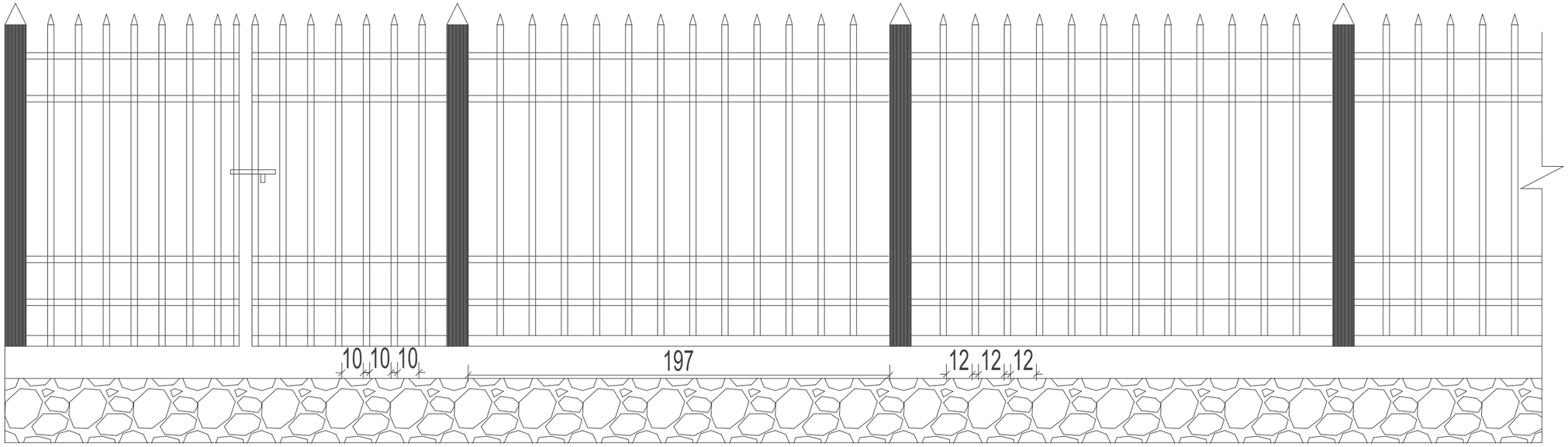

Fence front view

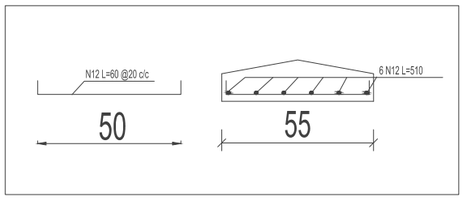

Details A

Drawing Title: Fence front view	Action:	Name:	Position / Organization :	Project Name: Fence for park improvement
	Surveyed and drawn by:	[redacted]	Taloqan Municipality Architect.	
	Conceptual Approved by:		Mayor of Taloqan	
	Conceptual Approved by:		Head of Taloqan SDAG	
Drawing Number : 4/4	Designed by:		RUN-Taloqan Municipal Engineering Advisor	Date:Nov-2012
	Technicial checked by:		RUN Engineering Advisor	
	Approved by:		RUN Project Manager	

APPENDIX B –PROJECT PROPOSAL

Regional Afghan Municipalities Program for Urban Populations

(RAMP UP-North)

Regional Command North

Project Proposal

Province: Takhar

Municipality: Taloqan

Project Number: RUN-P-TLQ-003

Project Name: Construction of Parking Lot & Park Improvement

Project Duration: 3 months

Estimated Project Cost: [redacted]

Date: November, 21 2012

MGRS Coordinates of Project Area: 42SWF4840165743

GPS Coordinates:

Latitude: 36, 44.171 N

Longitude: 69, 32.527 E

Problem Statement

Currently, there are no parking lots in the center of the city of Taloqan. Without a designated place to park, people stop their vehicles in inconvenient and unsafe places, causing traffic congestion, accidents, and general crowding in the city. Unregulated road-side parking is also considered to be a security problem by city officials. In addition, the nearby Municipal Park lacks boundary wall fences, entrance doors and stairs to the park, which will be essential for collecting entrance fees and generating revenue from the park.

Solution Statement

A new and safe parking lot in the center of the city, which is cleaned and well maintained, will improve traffic conditions within the city. With a clearly designated area for vehicles to park, the city can enforce traffic regulations that will reduce traffic congestion and accident rates. A secure parking lot can also improve security, not only by reducing unregulated parked vehicles but also by preventing theft and looting of parked vehicles. To accommodate for the size of the urban population in Taloqan, the parking lot will have the capacity for 84 vehicles and cover an area of 2,200 m^2.

The proposed project will also improve park recreational services by constructing a stone masonry boundary wall, four doors, and 12 sections of stairs.

Beneficiaries:

The direct beneficiaries of the project are the estimated 71,100 citizens of the city of Taloqan (36,000 men and 35,100 women). Indirect beneficiaries would include citizens from the rural areas of the province who come into the city to use the park.

Scope of Work

A. Methodology:

Specifications for the parking lot construction and park improvement, as agreed upon during the SDAG meeting, would include:

- Construction of a parking lot in 2200 square meters of land that would have the capacity for 84 vehicles, including leveling, backfilling, and installing PCC for the parking lot area,
- Stone masonry for the parking lot drainages,
- Construction of a guard room,
- Installation terrazzo tiles for parking, road and walk way,
- Construction of boundary wall fences, four gates and 12 sections of stairs,
- Following the construction of the parking lot, the municipality will contract the operation, management and maintenance of the parking lot through the use of a public-private partnership agreement.

B. Goods and Services Requested

A subcontractor will be selected for the construction of the parking lot and park improvements, and the requirements for construction will be:

- Site preparation (cutting, leveling, backfilling), terrazzo tiles, guard room, boundary wall, installation fence and other activities as per the requirements of the site and according to the design drawings.
- Construction of the parking lot, including PCC and stone masonry work.

- Installation of fence, four doors, and 12 sections of stairs around the Municipal Park.

All subcontractors for RUN activities are required to hire local laborers for all unskilled labor positions. These laborers will be hired from within the community of the nearby villages and beneficiaries of RUN activities. The subcontractor shall be responsible for providing documentation of the number of both skilled and unskilled laborers and number of days worked.

A. Cost Estimation

A:	BoQ for Construction of Parking Lot, Taloqan Municipality, Afghanistan									
S/N	Activities	No	Length (M)	Width (M)	Depth (M)	Detailed Quantity	Unit	Quantity	Unit Rate AFS	Total Cost in AFS
1	**Construction of Parking Lot**									
1	Site Preparation (grading of parking in uniform level as per drawing)						M^2	2200		
1.2	**Excavation of ditch and parking lot B with all required activities.**						M3	393.81		
1.3	Excavation of ditch foundation and parking lot B with all required activities.									
1.4	excavation of ditch in west side of parking lot A	1	25	1.4	0.3	10.50				
1.5	excavation of ditch in south side of parking	1	59	0.9	0.4	21.24				
1.6	excavation of ditch in south side of parking	1	28	1.4	0.7	27.44				
1.7	excavation of ditch in east side of parking B	1	25	1.4	0.7	24.50				
1.8	excavation of ditch in north side of parking	1	87	0.75	0.5	32.63				
1.9	excavation of parking lot B	1	37	25	0.3	277.50				
2	Backfilling of Parking lot A with materials (30% river sand +30 % river gravel +40 % soil) with compaction and Field Density Test (FDT) minimum to be 95 %, compacted layer must be 30cm						M3	350.66		
	Backfilling of parking lot A with materials (30% river sand +30 % river gravel +40 % soil) with compaction and Field Density Test (FDT) minimum to be 95 %									
2.1	Backfilling of parking lot A with materials (30 % rive sand +30 % rive gravel + 40 % soil) with compaction and FDT	1	48.5	24.1	0.3	350.66				
2	**Base course under the P.C.C.**						M^3	316.16		

	Transportation and laying leveling and compaction of 15cm gravel (base course material) for under the concrete pad of parking,									
2.1	base course for parking lot A	1	46.26	24.1	0.15	167.23				
2.2	base course for parking lot B	1	25.84	24.1	0.15	93.41				
2.3	base course for road B	1	24.1	7.6	0.15	27.47				
2.4	base course for road A	1	24.1	5.5	0.15	19.88				
2.6	base course for inside of ditch	1	136.1	0.4	0.15	8.17				
3	**Gate for parking with all required activities.**						M2	13.75		
	Gate (5.5*2.5) m for surround wall from (40*20)mm steel profile and pipe dia 10mm between two profile with installation painting and all required activities.									
3.1	R.C.C for two columns in each side of gate including steel bars and frame work.	2	3	0.35	0.35	0.735	M3	1.23		
3.2	R.C.C for two foundation of column in each side of gate including steel bars and frame work.	2	0.7	0.7	0.5	0.49				
4	**Provision of precast slab.**						No	44.00		
	Provision and installation of RCC precast slab 50x70x20 cm for covering of side ditch in front of gate as per drawing all complete.									
4.1	pre cost slab as drawing	44				44.00				
5	**Stone masonry for ditch**						M3	50.89		
	Stone masonry for ditch (stone must be mountainous) with 1:5 mortar.									
5.1	stone masonry for ditch in west side of parking A	1	24.1	0.5	0.8	9.64				
5.2	stone masonry of ditch in south side of parking	1	59	0.5	0.5	14.75				
5.3	stone masonry for ditch in south side of parking	2	28	0.5	0.5	14.00				
5.4	stone masonry for ditch in east side of parking #2	2	25	0.5	0.5	12.50				

5.5	Stone masonry for ditch in north side of parking.	1	75	0.4	0.35	10.50				
6	**P.C.C (M:150 : 1:2:4)for parking , under and top of stone masonry and under drainage**						M3	338.94		
	P.C.C (M:150 : 1:2:4) from sand and crashed gravel, river gravel not allowed for P.C.C work, for parking , under and top of stone masonry and under drainage as drawing with all required activities.									
6.1	P.C.C for parking lot A	1	46.26	24.1	0.15	167.23				
6.2	P.C.C for parking lot B	1	25.84	24.1	0.15	93.41				
6.3	P.C.C for road A	1	24.1	7.6	0.15	27.47				
6.4	P.C.C for road B	1	24.1	5.5	0.15	19.88				
6.5	P.C.C for inside of ditch	1	136.1	0.4	0.1	5.44				
6.6	P.C.C for inside of ditch in north side of parking	1	75	0.3	0.1	2.25				
6.7	P.C.C for under and top of stone masonry	1	190	0.5	0.1	9.50				
6.8	P.C.C for top of stone masonry as drawing	1	215	0.5	0.1	10.75				
6.9	P.C.C for top of stone masonry in north side of park	1	75	0.4	0.1	3.00				
7	**Terrazzo tiles for parking lot, road and walk way as design.**						M2	2073.32		
	Terrazoo for parking lot with 1:3 mortar, cement and crasher sand.									
7.1	Terrazzp for parking lot A	1	46.26	24.1		1114.87				
7.2	Terrazzo for parking lot B	1	25.84	24.1		622.74				
7.3	Terrazzo for road A	1	24.1	7.6		183.16				
7.4	Terrazzo for road B	1	24.1	5.5		132.55				
7.5	Terrazzo for walk way in east side of park	1	25	0.8		20.00				
8	**Roofing truss**									
	Providing and installation of roof truss and iron sheets with all required activities									
8.1	Description	QTY	Unit	Unit rate		total rate				
8.2	Steel Profile (box size) (140*140)mm Thickness 4mm for column.	116	M/L							

8.3	Steel Profile (box size) (40*100)mm Thickness 2 mm for truss down and top king post .	367	M/L							
8.4	Steel Profile (box size) (40*80) mm Thickness 2 mm for truss king post and purine.	1602	M/L							
8.5	Iron sheet 24 gage with transportation installation and all needed activities	781	M2							
8.6	Steel Plate 10mm for under column	3.8	M2							
8.7	painting (two coat anti oxide and 2 coat oil painting) of column and truss	2085	M/L							
8.8	bolt dia 16mm for jointing of iron sheets to profile	76	Kg							
8.9	Steel bar 16mm for foundation of column as design	318	Kg							
8.1	metal smith	1	LS							
8.11	Steel pipe dia 30cm and thickness 6mm for drainage in road	6	M							
9	Guard room									
	Guard room (2.5*3)m as drawing	1	Ls				Ls	1		
	Total cost AFS									
	Total cost USD									

B: BoQ Park improvement , Taloqan Municipality, Afghanistan

S/N	Activities	No	Length (M)	Width (M)	Depth (M)	Detailed Quantity	Unit	Quantity	Unit Rate AFS	Total Cost in AFS
1	**Concrete M:200 (1:1.5:3) for ring beam upper stone masonry as drawing**						M^3	37.95		
	Concrete M:200 (1:1.5:3) from cement , sand and crash gravel including cylinder test for ring beam upper stone masonry as drawing with all required activities.									
1.1	concrete for ring beam upper stone masonry in east side of park	1	138	0.6	0.125	10.35				
1.2	concrete for ring beam upper stone masonry in west side of park	1	138	0.6	0.125	10.35				
1.3	concrete for ring beam upper stone masonry in north side of park	1	115	0.6	0.125	8.63				
1.4	concrete for ring beam upper stone masonry in south side of park	1	115	0.6	0.125	8.63				
2	Stone masonry with 1:5 mortar						M3	27.60		
2.1	Stone masonry for under ring beam of east side of park.	1	138	0.5	0.4	27.60				
3	Steel bars for ring beams upper stone masonry.						Ton	4.40		
	Steel bars (12mm) for ring beams upper stone masonry including bending.									
3.1	Steel bars Russian 12mm	4.4								
4	**Fence for upper ring beams.**									
	Providing and installation of fence with all required activities.									

4.1	Description	QTY	Unit	Unit rate		total rate				
4.2	Steel profile 18 gage (30*30)mm horizontally and vertically between steel pipe as drawing	6906	M							
4.3	Steel pipe (dia =10cm) thickness 2mm	446	M							
4.4	steel cap for steel pipe dia=10cm as drawing	264	Pc							
4.5	steel cap for steel profile (30*30)mm as drawing	3188	Pc							
4.6	Steel Plate wide 2cm thickness 3mm (Aahan pati) as drawing	140	Kg							
	painting (two coat anti oxide and 2 coat oil painting) of fence	759	M2							
4.7	metal smith	506	m							
5.0	P.C.C M:150 (1:2:4) for stairs in side of park improvement									
5.1	P.C.C for stairs in north side and west and south side of park									
5.2	First stairs	12	3	1.2	0.15	6.48	M3	16.20		
5.3	Second stairs	12	3	0.9	0.15	4.86				
5.4	third stairs	12	3	0.6	0.15	3.24				
5.6	fourth stairs	12	3	0.3	0.15	1.62				
	Total cost AFS									
	Grand Total cost USD A+B									[redacted]

Involvement and Leadership of Municipal Staff in Project Selection, Development, Implementation & Monitoring and Evaluation

The Municipality, through the Mayor, has taken a leadership role in this project from the start by working closely with Department for Urban Development, citizens from the Service Delivery Advisory Group (SDAG) and with RU-N staff. The project concept has been verified by municipal departments, including the Service Sector, Construction Department and Cleaning Department, following the project selection by the SDAG on July 02, 2012. During the meeting, municipal officials also worked with the SDAG to draft the proposed scope of work for the parking lot and park improvement project.

On 06 September, 2012, Municipal Officials and the RU-N team visited the site to conduct a site survey and specify the exact location of the new parking lot and park. During this visit, these participants also defined the final scope of work for the project. The RU-N team in cooperation with the Municipal Construction Department also developed project designs and estimations of the project cost. The Mayor of Taloqan and the Head of Municipal Construction have both committed to lead municipal monitoring, evaluation, and oversight of this project along with the SDAG monitoring committee.

Level of Public Participation:

The SDAG held a meeting on July 02, 2012, with 14 members of citizens (12 men and 2 women) attending, where all members jointly identified the construction of a parking lot and improvement of the park as a priority of the community. At the meeting participants drafted a Service Delivery Improvement Plan and discussed plans for the sustainability of the project.

On September 26, 2012, the SDAG Procurement/Transparency, Communication and Survey Committees members pledged to play an active role in the implementation of the projects. SDAG members have committed to monitoring the construction of parking lot and improvement of the park.

Activity Objectives

- Improve communication and relationships between the Mayor/Municipal officials and citizens.
- Improve the participation of citizens, especially marginalized groups such as women and youth, in decision making processes related to the planning, design, implementation, and monitoring of municipal services.
- Improve the public's perception of the Municipality’s ability to deliver sustainable services.
- Improve and increase delivery of municipal services to all citizens, particularly through access to parking and recreational services to park.
- Increase the capacity of the Taloqan Municipality in project implementation.
- Increase revenue generation and the sustainability of municipal service delivery.
- Easing traffic congestion.

Sustainability and Maintenance:

Apart from the above-mentioned activities, RAMP UP-North will provide financial and technical support for quality assurance of project activities and supervision/monitoring of project, including capacity building of municipal staff and elements of revenue enhancement. Also RAMP UP-North will help the municipality in developing the operation and maintenance plan for this project and the public-private partnership agreement for the parking lot.

Municipality and Citizens Contribution (Initial 3 months):

The Municipality will contribute to the project by planting trees and flowers in the park and maintaining the parking lot.

Citizens, along with appropriate municipal officials, will also monitor the project during the implementation of the project.

Municipality and Citizens Contribution (after initial 3 months):

The maintenance of the parking lot and park is an essential issue for the Taloqan Municipality and the SDAG. Both consider the contract of the maintenance, operation and revenue collection for the parking lot to the private sector as a critical part of sustainability. It should be mentioned that municipality is going to contract the operation of the parking lot to the private sector through the use of a public-private partnership agreement, which will provide a regular source of revenue to the municipality to maintain and sustain the parking lot and park, as well as provide quality services to citizens. The partnership will also increase the transparency of the revenue available to the municipality.

Estimated Salary of Staff/ Maintenance Cost of parking lot:

Item	Quantity	Unit Cost/Month	Overtime/Month	Total Cost/Month	Annual Total Expenses
Cashier/cleaner (male)	1	100 USD		100 USD	1,200 USD
Ticket Person	1	100 USD		100 USD	1,200 USD
Maintenance cost/supply	LS	50 USD		50 USD	600 USD
Contractor income		100 USD		100 USD	1,200 USD
Total				**250 USD**	**3,000 USD**

The chart below shows the estimated daily/monthly/yearly revenue from the operation of the parking lot.

Quantity	Unit Cost	Daily Revenue	Monthly Revenue	Annual Revenue
60	0.4 USD	24 USD	720 USD	8,640 USD
Total			720 USD	8,640 USD

SUSTAINABILITY ANALYSIS

FOR

PARKING LOT AT TAKHAR NEW CITY TALOQAN PROVINCE

MONTHLY INCOME			
No. of users daily	Rate per user (US$)	Total income daily	Total income Monthly
60.00	$0.40	$24.00	$720.00

Monthly expenses					
Description	Unit	Quantity (Daily)	Quantity (month)	Unit cost	Total
Cashier/Cleaner (man)	Person		1.00	$100.00	$100.00
Ticket Person	Person		1.00	$100.00	$100.00
Maintenance Cost	LS		1.00	$50.00	$50.00
Total					$250.00

PROFITABILITY ANALYSIS			
Monthly Income	**Monthly Expenses**	**Contractor Profit Margin**	**Monthly profit**
$720.00	**$250.00**	**$ 100**	**$370.00**

Revenue Enhancement

Potential revenues from the parking lot have been estimated based on the established user fees and estimated usage rates, along with estimated operations costs (cleaning and cashier staff and maintenance costs) along with a reasonable contractor profit margin. The user fee will be set by the municipality, based on the advice of the SDAG on reasonable rates, at 20 Afghani (US$ 0.40).

Capacity Development

The project also includes capacity building of municipal officials and citizens representatives at different stages. Capacity development will focus on the topics below:

- Project selection
- Project development
- Project procurement
- Project implementation
- Project monitoring
- Public-private partnerships

Unique Aspects of Project

- The construction of a parking lot for the first time in the Taloqan Municipality will provide a safe area for vehicles and a recreational place for the inhabitants of the municipality.
- The municipality will establish a public-private partnership agreement for operating the parking lot and park.

Photos

Photos below display exact location of the field for the parking lot and park.